CORE
Metadata, citation and similar papers at core.ac.uk
Provided by NASA Technical Reports Server

N93-29736

TAURUS LIGHTWEIGHT MANNED SPACECRAFT EARTH ORBITING VEHICLE

S24-18
160600
P-10

UNIVERSITY OF MARYLAND

INTRODUCTION

The Taurus Lightweight Manned Spacecraft (LMS) was developed by students of the University of Maryland's Aerospace Engineering course in Space Vehicle Design. That course required students to design an Alternative Manned Spacecraft (AMS) to augment or replace the Space Transportation System and meet the following design requirements (1) Launch on the Taurus Booster being developed by Orbital Sciences Corporation; (2) 99.9% assured crew survival rate; (3) Technology cutoff date of January 1, 1991; (4) Compatibility with current space administration infrastructure; and (5) First flight by May 1995.

The Taurus LMS design meets the above requirements and represents an initial step toward larger and more complex spacecraft. The Taurus LMS has a very limited application when compared to the space shuttle, but it demonstrates that the U.S. can have a safe, reliable, and low-cost space system. The Taurus LMS is a short mission duration spacecraft designed to place one man into low Earth orbit (LEO). The driving factor for this design was the low payload carrying capabilities of the Taurus Booster—1300 kg to a 300-km orbit.

The Taurus LMS design is divided into six major design sections. The Human Factors section deals with the problems of life support and spacecraft cooling. The Propulsion section contains the Abort System, the Orbital Maneuvering System (OMS), the Reaction Control System (RCS), and Power Generation. The thermal protection systems and spacecraft structure are contained in the Structures section. The Avionics section includes Navigation, Attitude Determination, Data Processing, Communication systems, and Sensors. The Mission Analysis section was responsible for ground processing and spacecraft astrodynamics. The Systems Integration Section pulled the above sections together into one spacecraft, and addressed costing and reliability.

TAURUS SYSTEMS OVERVIEW

The Taurus Lightweight Manned Spacecraft (LMS) is a single-crew, short-mission spacecraft. The spacecraft is configured with a reentry capsule and a service module that is disposed of before reentry. The capsule will carry the pilot, main and secondary life support systems, avionics, back-up power supply, and parachute recovery system. The service module will carry the Orbital Maneuvering System, the main Reaction Control System and the Primary Power Generation System (see Fig. 1).

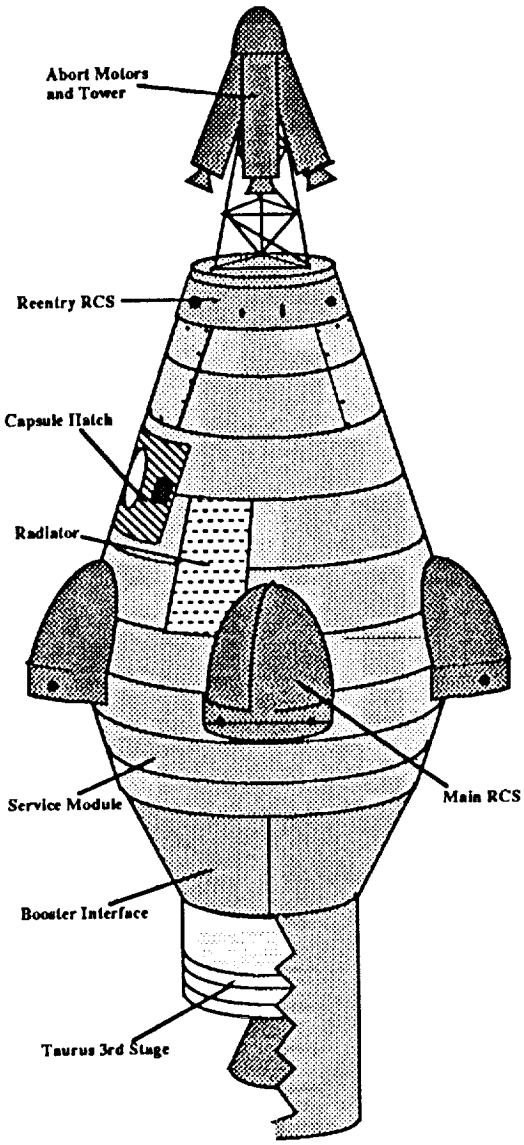

Fig. 1. Taurus LMS atop the booster.

The configuration of the service module/capsule design was chosen for two reasons. First, the spacecraft needed minimal mass on reentry to meet the required control characteristics.

This is accomplished by disposing of all unnecessary mass such as the propulsion system. Second, a stepdown from 2.0 m to 0.9 m was needed to place a capsule onto the booster.

The size of the Taurus LMS was chosen predominantly by the constraints imposed by the Human Factors group to place one man into a space capsule. The base of the capsule (above the heat shield) is 2.1 m in diameter, which is the smallest possible dimension to put one man into the capsule. The top of the capsule is 0.74 m, which is the minimum dimension required by the Propulsion group to attach the abort system. The height is fixed at 2.1 m to allow the sides of the capsule to be straight.

The top dimension of the service module is fixed by the bottom dimension of the capsule at 2.1 m in diameter. The height is 0.75 m. This dimension is selected because of the need to have the propulsion system in the service module. The bottom dimension is fixed at 1.6 m in diameter for attaching the Taurus booster structural interface (see Fig. 2).

The major constraint on the design of the Taurus LMS is the mass of the spacecraft. The maximum payload mass of the Taurus Booster is 1300 kg to a 300-km LEO. The systems masses are kept to a minimum, and are presented in Table 1. The total mass for the Taurus LMS is 1168.21 kg. This figure includes a budget margin of 50 kg for miscellaneous hardware. This launch mass is under the maximum payload allowable for the booster, thereby making the Taurus LMS a viable program.

The mass budget listed in Table 1 is corrected to show the mass gains from ejecting the abort system and the booster interface before the low Earth orbit is achieved.

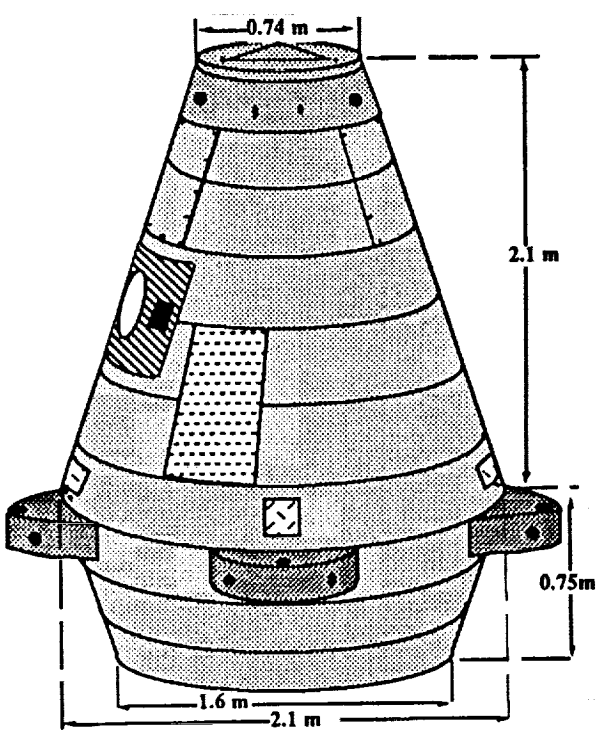

Fig. 2. Taurus LMS dimensions.

TABLE 1. Systems mass budget.

System	Mass (kg)
Capsule structure	133.88
Life support system	120.00
Crew cabin	112.50
Abort system (effective)	40.00
RCS capsule	9.00
RCS fuel and tank	0.54
RCS oxidizer and tank	0.86
RCS helium and tank	1.29
Batteries	21.05
Thermal control	40.00
Communications	11.50
Sensors	40.00
Data processing	45.00
Guidance and control	15.20
Parachute system	60.00
Service module structure	150.00
Interface to capsule	20.00
RCS main	20.00
OMS engine	20.00
Fuel and tank	85.64
Oxidizer and tank	106.52
Helium and tank	4.73
Power generator	25.20
Booster interface (effective)	31.30
Misc. Hardware	50.00
Total	1168.21

The crew capsule will be the primary component of the Taurus LMS. It contains the pilot, the dual life support systems, the avionics systems, and the emergency/reentry power systems. Mounted to the exterior of the capsule will be the Reentry Reaction Control System, the Abort System (during launch), the Guidance and Navigation Sensors, and the Communications Antennas. The major components of the capsule are shown in Figs. 3 and 4.

The service module carries the orbital maneuvering engine, the power generation system, and the main reaction control system. All three of these systems feed off a central fuel and oxidizer system. The size of the propulsion system determined the height of the service module. The placement of the propulsion system is shown in Figs. 5 and 6.

MISSION ANALYSIS

The limited mass capability of the Taurus booster restricts the orbital maneuvering abilities of the Taurus LMS. With a total ΔV of approximately 270 m/sec available for the OMS, the Taurus LMS is not capable of performing a rendezvous mission, which would require a ΔV of at least 400 m/sec. Consequently, the baseline mission for the Taurus LMS is a single manned launch and return. The spacecraft is designed to be launched due east from Cape Canaveral at an inclination of 28.5° and with an orbital altitude of 300 km.

HUMAN FACTORS

The life support system of the Taurus LMS has been designed around a single astronaut on a 24-hour mission to LEO. The main life support system (MLS), as outlined in Fig. 7, consists

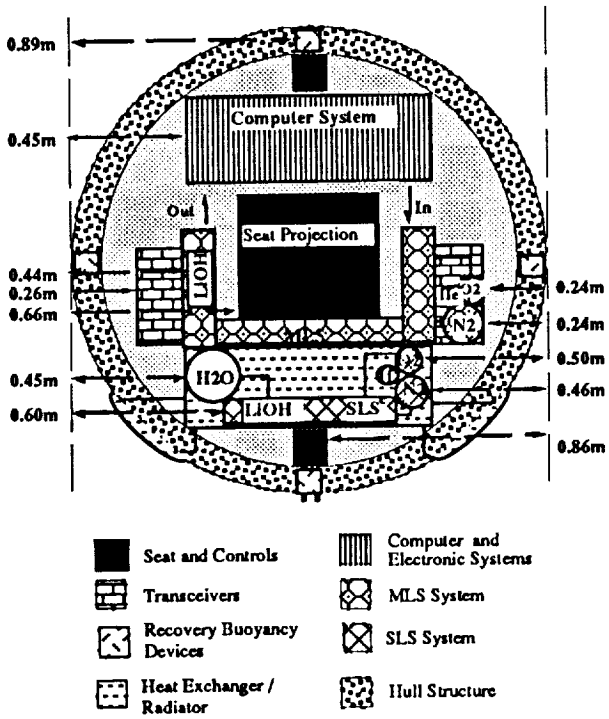

Fig. 3. Capsule internal cross section 10% from bottom.

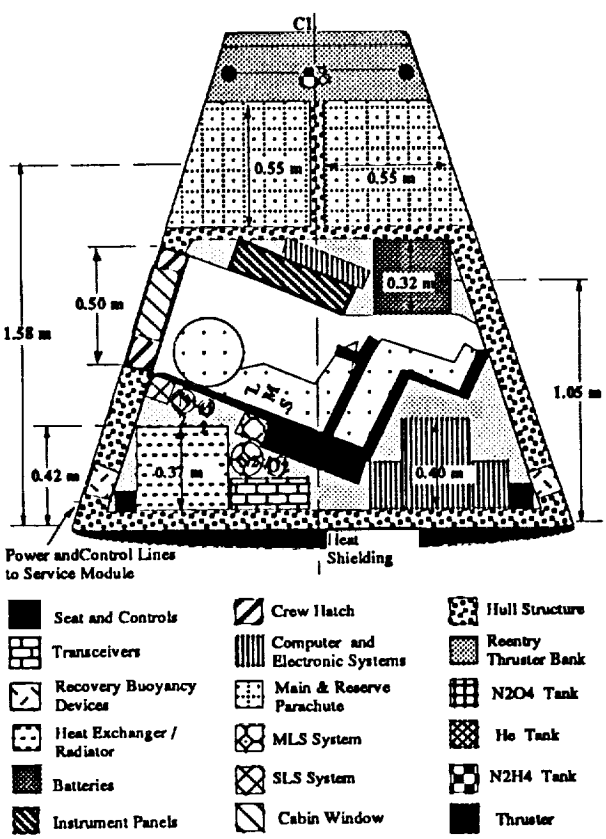

Fig. 4. Capsule internal side view.

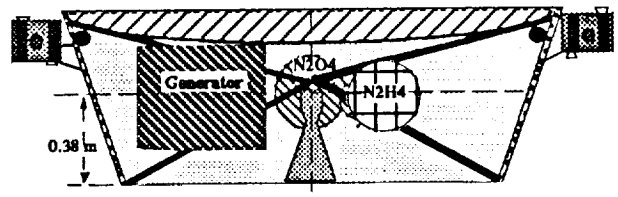

Fig. 5. Service module internal side view.

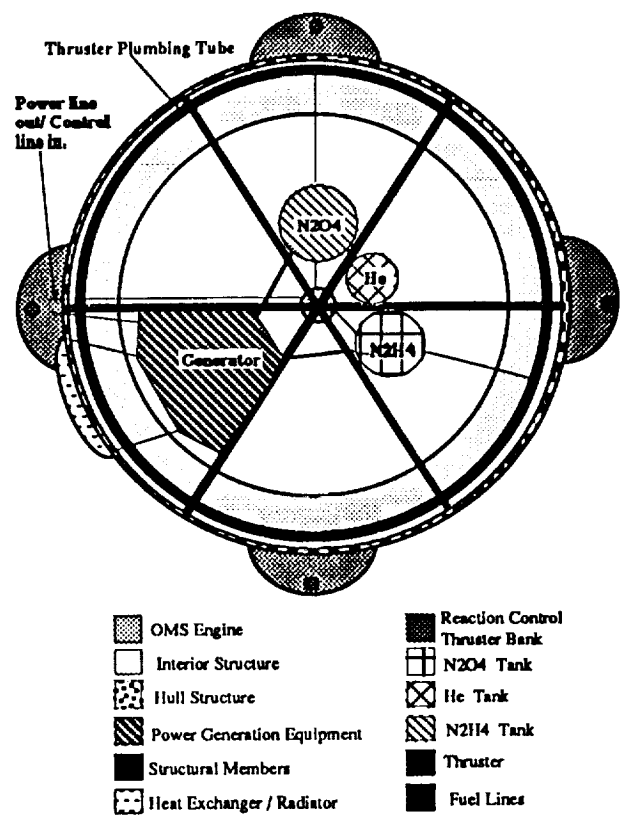

Fig. 6. Service module internal top view.

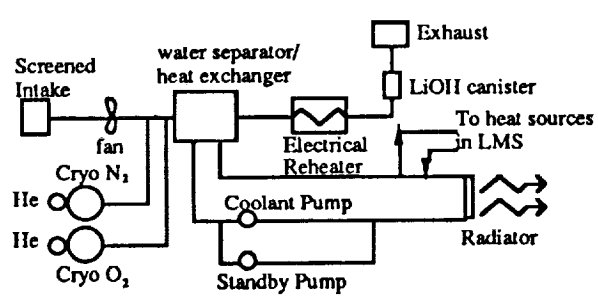

Fig. 7. Main life support system.

of a pressurized crew compartment held at 21°C and 50% humidity[1]. Continual recirculation of the cabin atmosphere (80% of which is nitrogen and 20% of which is oxygen at a total pressure of 101.3 kPa) is achieved through a single duct that will contain scrubbers to remove excess water vapor, carbon dioxide, and trace contaminants. The MLS air supply is stored cryogenically in two tanks, one for oxygen and one for nitrogen. Enough air is stored on liftoff to allow for repressurizing the cabin during orbit in the event of contamination or loss of cabin air, while allowing for an average astronaut metabolic consumption value of oxygen of 0.91 kg per 24 hours. A cabin volume of 4.08 m^3 is estimated in the calculations of the required mass of gas to repressurize the cabin.

One cryogenic tank contains 4.055 kg of liquid nitrogen, the other contains 2.066 kg of liquid oxygen. Electrical reheaters supply the energy to vaporize and heat the cryogenic fluids to a cabin temperature of 21°C. The computer regulates the pumping of the gas on a need basis, determined by its sensors.

A water separator serves as a heat exchanger. The separator is composed of a bank of four hundred aluminum tubes with an overall mass of 16.12 kg. Ethylene glycol will flow through these tubes, entering the bank at 0°C and leaving it at 5°C. Air will enter the heat exchanger at 21°C and will be cooled down to 10°C by the ethylene glycole, which in turn will flow to two radiators located on the exterior skin of the spacecraft[2]. These radiators will be oriented towards deep space during the mission and will radiate to space a total of 383 W of heat. The radiator is a tube-and-fin type, in which the coolant tubes have fins attached to them to increase the radiating area. Each radiator is constructed of aluminum and weighs 3 kg.

Once the air is reheated, it will pass through a lithium hydroxide (LiOH) canister that will chemically remove excess carbon dioxide. Each LiOH canister is cylindrical, with a diameter of 12 cm and a length of 0.26 cm. One canister contains enough LiOH for 12 hours of carbon dioxide removal. Three (rather than two) canisters are used in the 24-hour mission for safety reasons.

The secondary life support system (SLS), as shown in Fig. 8, consists of a 10-kg pressure suit. This suit is worn by the astronaut throughout the mission, but is not pressurized unless there is an MLS malfunction. The SLS provides a self-contained environment for the astronaut until successful deorbit and landing is achieved. The pressure suit is composed of the helmet and the body. A special seal separates the two parts, allowing for a one-time pressurization of the body by pure nitrogen gas, while continually circulating 50% oxygen and 50% nitrogen at a total pressure of 55.16 kPa inside the independent helmet. The SLS gasses are carried in a pair of separate cryogenic tanks that contain 1 kg of oxygen and nitrogen, respectively. The gasses are heated electrically before being injected into the SLS loop. A water-cooled undergarment, with tiny tubes woven into the fabric through which cooling water flows, provides thermal control for the astronaut. There are three attachment points on the pressure suit for hookups into the communications system, the atmospheric filtering system, and both the liquid-cooled undergarment and the pressurizing line from the cryogenic nitrogen storage tank.

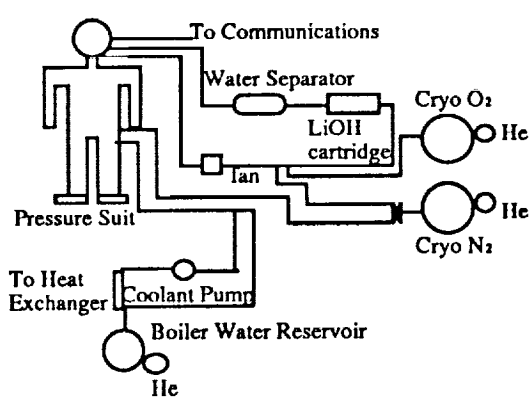

Fig. 8. Secondary life support system.

The mission duration is short enough that only 5 kg of weight is used to supply the necessary rations. A large plastic squeeze bottle will be filled with drinking water and placed aboard the capsule for the astronaut, along with several freeze-dried food bars. Additional life support equipment include a 4.5 kg CO_2 fire extinguisher, a firstaid kit, and a 17.7 kg survival pack similar to the ones carried by U.S. military pilots.

There is no waste removal from the spacecraft. The astronaut will use catheters and plastic bags for liquid waste, and will wear a diaper-like undergarment for solid waste collection.

Two major requirements influenced the design of the pilot seat: it had to be conducive to large accelerations and it had to occupy a minimal cross-sectional area and volume inside the capsule due to the weight restriction. The mass of the seat is 16 kg.

PROPULSION AND POWER

The abort system will insure crew survival in case of a critical failure of the Taurus booster system, such as an explosive detonation of the booster fuel or a critical malfunction. Assuming a 5-s detection time before the fuel in the booster detonates, the abort system would have to place the Taurus LMS crew capsule at a distance of 805 m from the launch site or moving booster, and place the capsule at a minimum of 500 m in altitude for recovery parachute deployment. The 805 m radial distance represents the typical danger radius of a detonating solid rocket booster system.

Thrust termination ports are required hardware additions to the Taurus booster. The thrust termination device, or "blow out" ports, would almost instantaneously vent the pressure and extinguish the flame within the thrust chamber, thereby dropping the acceleration of the Taurus booster to zero and allowing the abort system to function well within the required acceleration limits set by the human factors division for human pilots.

Solid abort rockets will be used in the Taurus spacecraft because of their (1) high thrust-to-weight ratios, (2) simple design, (3) high reliability, (4) lower volume requirements, and (5) ease of storage. A combination of three solid abort motors, placed 120° apart, will reduce the hardware mass and increase reliability by decreasing the number of failure and heating points on the Taurus capsule during an abort sequence.

A tower structure was designed for the abort rocket placement, providing a mass savings by discarding the entire abort system at a predetermined altitude (40-50 km) past the point of maximum dynamic pressure. Other advantages of this tower structure are minimal heating of the upper stages of the Taurus booster and capsule by the exhaust plume of the motor, and good directional control characteristics. The motor top is an aerodynamically designed fairing to reduce drag.

To reduce the mass of the system, a high-energy, solid double fuel DB/AP-HMX/AL has been selected based on the need for an energetic solid propellant with a high specific impulse of 270 s[3]. The HTS organic (graphite) composite was selected for the motor casing and nozzle assembly, due to its high tensile strength and low density when compared to current metal alloys and other composite materials. This casing material will be protected from the hot gasses and the solid fuel's chamber temperature of 3707°C by a layer of ablative asbestos phenolic 2.54 mm thick. At the motor throat, thermal protection heat transfer consists of an 0.8-mm-thick layer of ablative pyrolytic graphite covering a back-up 2.0-cm layer ATJ molded graphite (see Fig. 9). The 0.8-mm layer of pyrolytic graphite will extend from the throat to the tip of the nozzle to protect the structural HTS graphite.

The abort initiation can be controlled manually and by ground. The manual abort system is located in the crew cabin. The abort command can be initiated by launch control in the event of a detected malfunction of the Taurus booster or other critical subsystem. The ignition system for the solid motors consists of a pyrotechnic igniter mounted at the top of the abort motor solid fuel.

The orbital maneuvering system (OMS) consists of a non-reusable main liquid propellant rocket engine, two tanks (one for the fuel and one for the oxidizer), an injector, and a pressurized gas system. The OMS must be reliable and have a low mass. It also must be capable of restarting numerous times, and of operating in the vacuum conditions of space with a thrust level of 3158 N. This value was determined by assuming a ΔV of 270 m/s and an impulsive maneuver of 1′, which is approximately 1° of distance around the Earth's orbit.

The main engine is a liquid propellant type. The advantages of this type of engine over a solid one are high performance, repeated restarts, and randomly variable duration for each start. Hypergolic propellants are used to allow for a greatly simplified ignition system. Moreover, since hypergolic propellants ignite smoothly upon contact, accumulation of the mixture of fuel and oxidizer in the combustion chamber does not occur in large quantities, and the danger of explosion is minimized. The combination of nitrogen tetroxide and hydrazine is used due to its high specific impulse, ease of storage, and material compatibility for the tank design.

The engine specifications and the properties in the combustion chamber were determined assuming a one-dimensional compressible flow and an isentropic nozzle region. A study of the variation in chamber pressure vs. thrust coefficient was undertaken to obtain the optimum chamber pressure. The effects of increasing the chamber pressure above 2.069 MPa on the thrust coefficient were slight. The optimum chamber pressure, therefore, was determined to be 2.069 MPa. The specific impulse (I_{sp}) of the main engine was found to be 292.3 s. Using this I_{sp} and a total ΔV of 270 m/sec in the rocket equation, the total propellant mass was found to be 48.08 kg of fuel (hydrazine) and 51.92 kg of oxidizer (nitrogen tetroxide). A summary of the combustion chamber parameters and engine specifications is presented in Fig. 10.

	Chamber	Throat	Exit
P (MPa):	2.069E6	1.144E6	6894
T (K):	2857	2528	1880
A (cm^2):	65.1	8.9	209.3

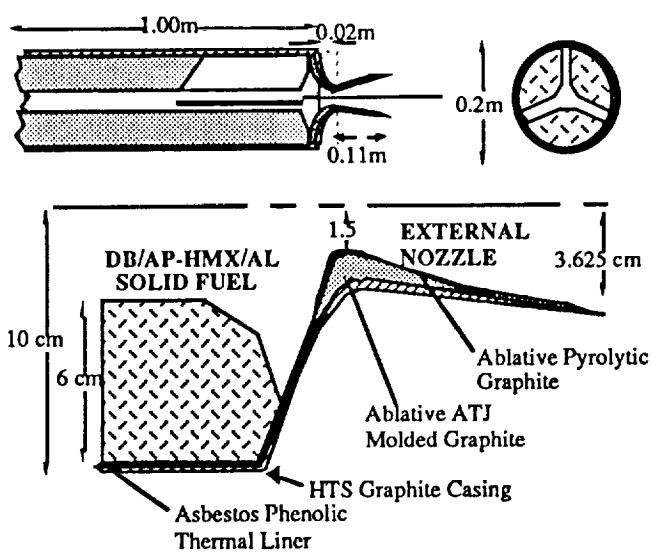

Fig. 9. Solid abort motor internal layout.

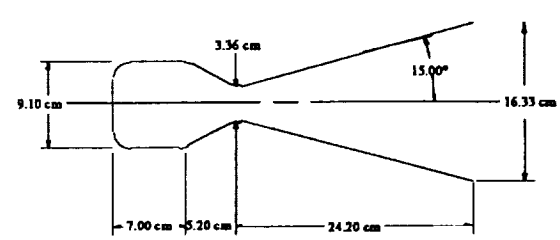

	Chamber	Throat	Exit
P (PA):	2.069E6	1.144E6	6894
T (K):	2857	2528	1880
A (cm^2):	65.1	8.9	209.3

Mass = 16 kg
Thrust = 3158 Nt
Isp = 291.3 sec
Propellants = N_2H_4/N_2O_4
Mixture Ratio = 1.08

Specif Heat Ratio = 1.26
Chamber thickness = 1.54 cm
Throat thickness = 1.54 cm
Nozzle Thickness = 0.71 cm

Fig. 10. Engine specifications.

Thermal protection using ablative cooling is effective for longer firing durations without significant weight penalties. Although this technique was initially used for solid propellant systems, it has since proved to be quite successful for liquid engines with chamber pressures of 2.069 MPa or less, and pressure-fed systems[4]. The char depth or thickness of the thrust chamber will increase at the combustion chamber and throat, and decrease to a constant thickness along the rest of the nozzle. Using a Refrasil phenolic ablative thrust chamber, the thickness at the combustion chamber and throat is 1.54 cm, and 0.71 cm for the rest of the nozzle.

To introduce and meter the flow into the combustion chamber, an impinging stream-type injector has been selected. The propellants are injected through a number of separate orifices so that the fuel and the oxidizer streams impinge upon each other aiding in the break-down of the liquid.

The OMS is located in the service module of the Taurus LMS, and will use a simple and reliable pressurized gas feed system. The oxidizer and fuel are fed into the combustion chamber by the displacement of helium gas stored at a pressure of 27.58 MPa. The tanks for the propellants are kept at a constant pressure of 3.45 MPa. They contain all the propellant needed to operate the OMS, Reaction Control System, and Power System. This design enables any one of the aforementioned systems to draw more propellant from the common tanks in the event of an emergency. The plumbing in the OMS is designed so that active systems are double-stringed to provide redundancies, while passive systems are single stringed. A schematic diagram of the OMS is shown in Fig. 11.

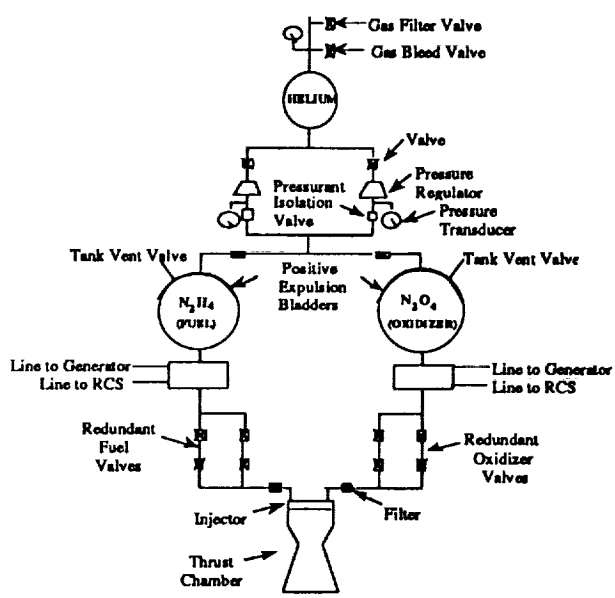

Tank Dimensions, Mass and Pressure

	He	N_2H_4	N_2O_4
Radius :	18 cm	27 cm	26 cm
Mass :	4.73 kg	85.64 kg	106.58 kg
Pressures :	27.58 MPa	3.45 MPa	3.45 MPa

Fig. 11. Schematic diagram of the OMS.

The RCS measures, corrects, and counteracts adverse motion due to forces and moments that cause the spacecraft to rotate or translate. It also maneuvers the Taurus LMS in attitude control, position keeping, and reentry. The spacecraft will experience two types of perturbations depending on the inclination of the orbit plane to the equator. These are nodal regression and apsidal shifting. Other principal forces that the spacecraft will experience include aerodynamic drag and internal accelerations produced by propellant shifting and astronaut movements.

The RCS was divided into a reentry control, located at the top of the Taurus LMS capsule, and a main reaction control, located at the top of the service module. The reentry system will be used during deorbit when the service module is detached and the capsule begins to reenter the Earth's atmosphere. Its primary purpose is to allow for cross-range maneuvering and reentry oscillation dampening.

The main reaction control system provides the Taurus LMS with three degrees of freedom control at all times with two to three redundant thruster directions. The thrusters will be covered by an aerodynamic shroud, which is blown off when separation from the Taurus booster occurs.

The primary power supply is a single reciprocating hydrogen-nitrogen tetroxide engine[5]. The mass and size of the engine has been scaled down from an existing engine used in missions similar to the one performed by the Taurus. For the required energy of 19.2 kWhr, the weight of the engine was scaled down to 25.2 kg. This includes the weight of the compressor, alternator, cooling system, and plumbing. The engine has dimensions of 0.519 m by 0.405 m by 0.463 m, which results in a volume of 0.0973 m^3.

The secondary power supply is a system of silver-zinc rechargeable batteries. They are lightweight and compatible with the other systems. The batteries will be used for reentry power after the service module containing the primary power system is detached, and whenever the demand for power rises above the primary power supply's output capability. The batteries have a cycle life of 20 to 200 cycles, and can be recharged using the primary system's electrical power output. For a discharge rate of four hours, the total weight of the batteries will be 21.05 kg. The batteries, therefore, can be recharged six times during the entire mission.

The silver-zinc batteries are composed of 45 to 50 cells or plates that are connected and stored inside two separate sealed boxes to prevent leakage and protect them against the space environment. Selecting two batteries adds redundancy and reduces the risk of a malfunction. When the mission is completed and the spacecraft is ready for reentry, the batteries will provide the primary power.

AVIONICS

The initial navigation system on board the Taurus LMS is the LCINS (Low Cost Inertial Navigation System). The LCINS is a strapdown configuration with two degrees of freedom gyros. The inertial reference assembly is reduced in size, and a digital microprocessor performs all of the measuring, data processing, instrument torquing computation, scaling, attitude, and navigation functions. With dimensions of 152 by 152 by 215

mm, weight of 3.0 kg, and power of 35 W, the LCINS is the ideal system to use in a heavily mass-constrained spacecraft such as the Taurus LMS.

Since the positional error of the LCINS increases every hour, it is updated by another navigation system. The primary satellite navigational system considered for the updates is the Global Positioning System (GPS). GPS is a satellite-based navigational system that will give continuous worldwide coverage by the year 1992, when there will be 21 operational satellites in orbit. The satellites orbit every 12 hours and transmit two L band signals: L1 at 1575.42 MHz and L2 at 1227.60 MHz. This system of orbits ensures at least four satellites in view at all times.

An accuracy of better than 0.25° is required for altitude determination and control of the Taurus LMS. Sun, horizon, and laser fiberoptic gyroscopes are used to determine the spacecraftUs attitude. Reaction thrusters are used in the Taurus LMS attitude control system (previously discussed in "Propulsion and Power Systems") for their high force and accuracy.

The primary function of the data processing system is to monitor all equipment on the Taurus LMS. Through the use of sensors and output devices, this system will keep the astronaut informed about the present condition of all aspects of the spacecraft. Another function of the data processing system is to perform necessary navigation and flight control computations. The goal of this system is to allow for as many onboard processing capabilities as possible, thereby relying less on ground-based computations.

The data processing system will also make the necessary computations for the OMS and the RCS. These computations involve determining the directional vector to the target position, the number and duration of OMS engine burns, and the required thruster firings for attitude control. The data processing system must also interact with other external systems on the spacecraft. For example, the communication system must be linked to the processors to allow for data uplink and downlink. This computer system has been designed to control all systems of the spacecraft in case the astronaut is unable to perform his/her duties, allow for dual control when both the computer and astronaut are functioning, and allow for manual control if the computer malfunctions.

Three major types of architecture were studied for the Taurus LMS design: centralized, federated, and distributed. A centralized system has been selected (see Fig. 12). This design consists

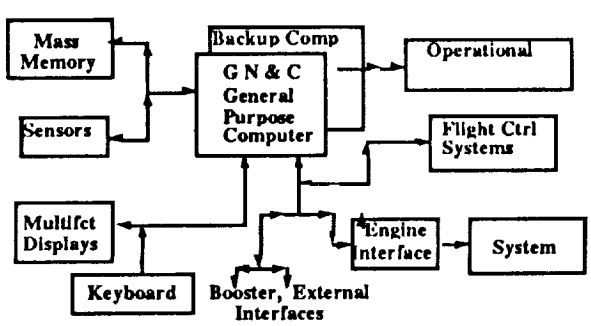

Fig. 12. Schematic diagram of centralized system.

of two general-purpose processors (one as the primary processor, and one as a backup computer) for guidance, navigation and control[6]. These central processors will be linked to the main memory, sensors, display controls, engine interfaces, and other external interfaces.

Each processor will have its own RAM associated with it. The size of the RAM will be 16 Mbyte. This size allows for an estimated 1 Mbyte of software, 8 Mbytes reserved for runtime memory, and 7 Mbyte for temporary data storage and space for uplinked code if needed. In case this memory gets corrupted, the capability to reload the software from the mass memory will exist. The decision to go with individual RAM is made to allow quicker and more independent execution. The design of the data bus consists of a two-way linear bus configuration. Six buses are used in the Taurus capsule, two for sensors and mass memory, two for engine and external interfaces, and two for displays and keyboard (all connected to the CPUs). Two liquid crystal displays (LCD) are used in the Taurus capsule[7]. They require little depth (approximately 2.0 cm) and power, and are digitally compatible. They do, however, require some type of external back light.

Sensors are required for the Taurus LMS to operate through computer and/or manual control. The sensors return information concerning capsule operational systems to the astronaut for updates and corrections. Consequently, sensors are applied to the propulsion, main life support, secondary life support, reaction control, and abort systems. For the propulsion, it is necessary to measure the conditions of the pressurant, oxidizer, and propellant tank, as well as the conditions of the plumbing and rocket combustion chamber. A total of eight temperature sensors ranging from 20 to 3000 K are required in the system.

With respect to the main life support system, it is necessary to measure the conditions of the pressurant, nitrogen and oxygen tanks, as well as the heat exchanger and cabin conditions. The total number of pressure sensors needed is 18. The sensors for the secondary life support system are similar to those in the main system due to their similar design; the only difference is the addition of a water tank. The total number of sensors required is 134. The total number of sensors required in the reaction control system is 98. Abort control sensors are placed on the system to guarantee that the tower has been armed before launch. Ten solid solid fuel motor sensors are used. Eight extra sensors are added to the Taurus system for hatch and ejection determinations. In total, there are 428 sensors on the Taurus LMS to check all systems for proper functioning, and to permit necessary changes if malfunctions occur. Because of the weight constraint on the Taurus system, only those sensors necessary for proper operation are used. The total weight of the sensors is approximately 25 kg. Using optical fiber wiring minimizes the amount of heat and radiation shielding. The entire mass of the sensors system on the Taurus service module is 50 kg. All sensors have been made double redundant and are 99.999% reliable.

Two modes of communication have been chosen to ensure reliability. The primary receiving station will be the Telemetry Data Relay Satellite System (TDRSS). It consists of two satellites that enable communications for 80 min of the 95-min orbit. To communicate through TDRSS, frequencies must be chosen for their few atmospheric losses in transmissions to Earth. The

range of 1 to 10 GHz is the only range that meets this requirement. In the event communications cannot be made with TDRSS, a second choice for a receiving station will be direct transmission to Earth. Although the number of Earth stations is limited, there could be at least three used per orbit, which would account for about 30 min of transmission time per 95-min orbit. The capsule will also receive transmissions from the Global Positioning System (GPS). These communications are used for navigation purposes, and operate on two frequencies, at 1.575 GHz and 1.228 GHz. The antenna is placed on the capsule's surface facing outward to GPS. The frequency assignments are based in the S band and are spaced so that not more than 500 MHz will be assigned for any one transponder. The bandwidth for these frequencies is determined from the amount of data that must be transmitted each second, and the clarity that the data must have in order to be received.

Link budgets are used to determine whether a signal will be receivable. The overall qualifying figure in the link budget determination is the carrier-to-noise ratio. This ratio must be positive, and at least 10 to 12.5 dB in order for the signal to have good reception. The weakest link is the downlink to TDRSS. In this link the carrier-to-noise ratio has been reduced to the minimum needed for good reception.

To transmit and receive the desired frequencies, different antennas are needed to cover the gaps in the bands used. Each band requires a different type of antenna based on the necessary bandwidth. A dipole antenna will be implemented for the S-band, and housed under a skin blemish to avoid the need for mechanical deployment. There will be two of these antennas, one facing Earth, and one facing space. The two antennas supply a mode of redundancy, and make serving Earth stations and TDRSS efficient during orbit. The L-band antenna will be mounted on the skin in the same fashion as the S-band antennas, but only on the surface facing GPS satellites.

STRUCTURES

A tower or truss acts as the connection between the abort system and the capsule. It consists of a 3-sided structure with a total of 24 members made of 6061-T6 aluminum. The abort engines are covered in a graphite/epoxy casing that is bolted directly to the top of the tower. Each longitudinal member of the tower is connected to the capsule by two short members fastened to the capsule by explosive bolts. The tower and abort system, therefore, can be jettisoned so that extra mass is not carried into space.

The structural framework of the capsule consists of 14 stringers and a skin thickness of 4.8 mm. I-beams stringers were chosen for two reasons: they are extremely resistant to bending, and flanges on each side make for easy fastening of the skin and pressure vessel. Each stringer will carry an axial loading of 5 kN with a cross-sectional area of 0.00012 m^2. The hatch is designed to hold a small navigation window.

The service module structures are divided into four categories: explosive bolts for the capsule and service module, longitudinal stringers and transverse rings, shear flow, and a capsule-supporting truss. These structures are designed to sustain a 10-*g* axial acceleration, and a 1-*g* sideways acceleration. A safety factor of 1.2 was used throughout the analysis.

Four equally spaced explosive bolt joints connect the capsule and the service module. A riveted-type butt joint was designed so that the bolts are of equal strength in shear, tension, and compression. There are four joints with two 225-mm explosive bolts on each joint.

Eight longitudinal stringers (I-beams with cross-sectional areas of 330 mm^2) were chosen to carry the axial load. Two stiff end rings provide rigid support against lateral displacement, while three relatively flexible intermediate rings give elastic lateral support. The five transverse rings are shown in Fig. 13. The stringers and rings are made of 6061-T6 aluminum. The loading acting on each stringer is 11.587 kN.

The shear flow is only carried by the skin and has a maximum value at the bottom of the service module. The skin is also made of 6061-T6 aluminum, and has a thickness of 2 mm. Figure 14 presents the values for the forces and shear flow carried by the stringers and skin.

A truss structure will interface the Taurus LMS and the Taurus booster. The design constraints of this structure are prescribed by the dimensions of the service module and the mechanical interface of the Taurus booster. These dimensions are shown in Fig. 15. In addition, the structural interface is designed to take a vertical force of 8 *g* and a horizontal force of 1.7 *g*.

The truss structure will be made of 60601-T6 aluminum and will weigh approximately 31 kg. The axial stresses in each member of the truss are below the yield stress of this material (542 MPa). The design loads with a margin of safety are 108 kN in the vertical direction and 23 kN in the horizontal direction. The volume of the material used is 0.0112 m^3. The interface will be equipped with explosive bolts around both the upper and lower circular perimeter. The bolts will be equipped with springs to allow separation from the service module once the orbit is circularized.

REENTRY AND RECOVERY

The first portion of the reentry trajectory is a free-flight phase that takes the spacecraft from its orbit to the atmosphere (assumed to begin at 120 km). The second portion is the

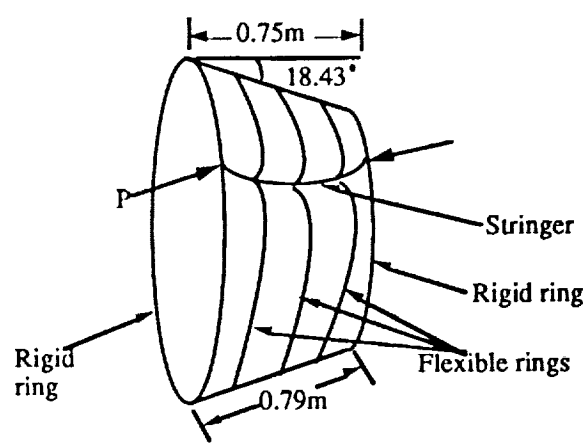

Fig. 13. Stringer under compressive load.

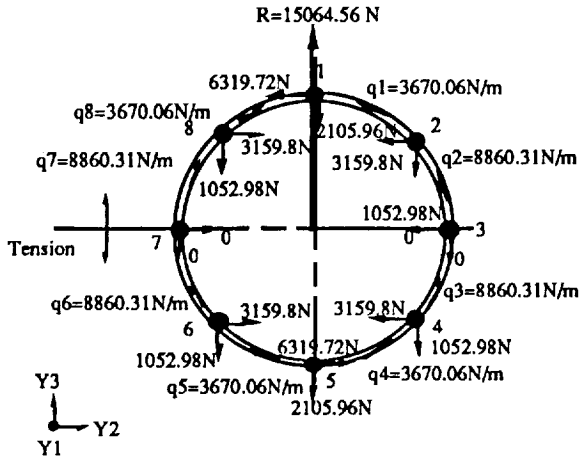

Fig. 14. Forces and shear flow carried by the stringers.

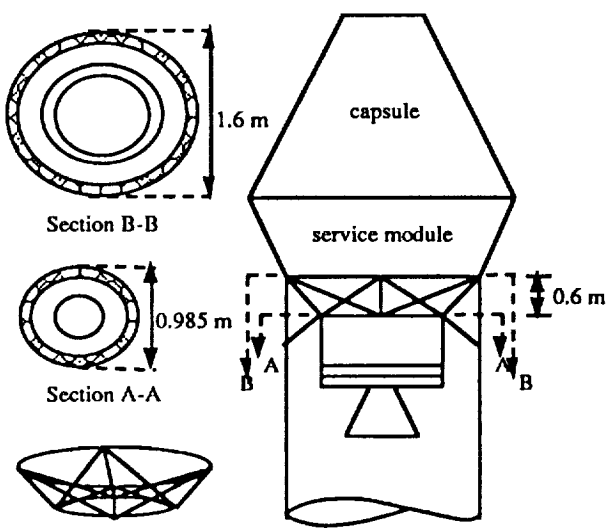

Fig. 15. Capsule configuration and interface dimensions.

atmospheric flight phase, during which the spacecraft flies through the atmosphere to land. A deorbit burn is necessary to slow the spacecraft down so that it falls from its orbit to a transfer orbit that brings it down into the atmosphere. Upon reaching the atmosphere, aerodynamic forces will overcome orbital mechanics and control the trajectory. The burn determines the spacecraft's new orbit, which sets its flight angle and velocity at atmospheric interface. The ΔV required to deorbit is 140 m/sec from an altitude of 300 km. This corresponds to having a reentry flight path angle of 2.0°. Time of flight and angular distance traveled in the free-flight portion were computed by the method of Eccentric Anomaly[8]. It will take 18 min and 52 sec to fly from the deorbit burn altitude of 300 km to 120 km. During this time the spacecraft will fly 77.14° around the Earth. This will allow the location of the deorbit burn performance to determine a selected touchdown site.

A computer program was written to predict the atmospheric flight reentry trajectory. The time of flight between crossing 120 km and Earth impact is 775 s. The spacecraft gains altitude for 50 s at an altitude of approximately 59 km before continuing to fall. The velocity does not change significantly until 150 s into this portion of the flight, at which time the craft has reentered to 80 km and aerodynamic forces begin to influence the spacecraft's trajectory. The maximum spacecraft deceleration is 3.07 *g*. The craft will have slowed down to 63 m/s (0.19 Mach) by the time 3 km is reached so that the parachutes can be deployed.

The Taurus LMS will use a phenolic-nylon ablative heat shield with a heat combustion of 12 MJ/kg to protect the capsule from the aerodynamic heating loads upon reentry. The thermal protection system is composed of a carrier support panel, mounted to the capsule structure via channel beam panel supports, with a layer of insulation between the panel and the skin at the capsule[9]. The capsule will undergo a maximum wall temperature of 1606 K and a maximum heating rate of 563.4 KW. The TPS for the walls of the capsule will be the same as for the heat shield, but bonded directly to the skin of the spacecraft.

The Taurus LMS recovery system consists of two round parachutes deployed simultaneously at a reentry speed of Mach 0.19. The deployment sequence will begin at 3 km above sea level, at which point a computer command will fire explosive bolts on both parachute hatches, allowing the mortar-deployed pilot parachutes to pull the two canopies out into the wind-stream. Once the parachutes are inflated, the capsule will begin a 10-min canopy descent to the ocean, inflating its pontoon before splash down. Upon splashdown, the canopies will be released and dye markers will be ejected through the parachute hatches. A radio beacon will help guide the recovery aircraft and vessels to the Taurus LMS.

COSTING

The costing of the Taurus LMS was done as an expendable vehicle that will become operational with one mission in May 1995. The Taurus LMS will have three missions in 1996. The project will be disbanded at the end of the fourth mission to allow the space administration to proceed with the application of the Taurus LMS technologies.

The costing of the Taurus LMS was divided into two parts, nonrecurring and recurring. Nonrecurring costs are the costs of design, development, testing and engineering of the spacecraft, as well as the project management and integration costs. Recurring costs are the costs of the individual spacecrafts as well as the integration, assembly, and checkout of the spacecraft, as well as booster and launch/recovery costs[10]. The Nonrecurring costs of the project will be $1148.3 million in 1991 dollars. The total project costs would be $1491.31 million. This results in cost of $372.83 million per flight.

GROWTH POTENTIAL

Growth potential for the Taurus LMS takes two forms. The first would involve an increase in the Taurus booster capabilities. The second would entail launching on a different booster. Assuming the former occurs, the ability to launch with an additional 300 kg of fuel would provide for the necessary ΔV to enable a rendezvous and docking with the Space Station *Freedom*. In this scenario, the Taurus LMS could be used for small-scale emergency supply deliveries, space station crew rotation, or as an emergency lifeboat docked at the space station. Moreover, it could perform a visual satellite inspection to determine the cause of failure and evaluate the feasibility of in-orbit repair.

The second option would be to launch the Taurus LMS on a Delta booster. This would permit nearly four times the mass to be launched into orbit, making the aforementioned missions possible.

CONCLUSION

The Taurus Lightweight Manned Spacecraft is a stepping stone for the Alternative Manned Spacecraft program that offers a foundation to build a new space program. The use of the Taurus Booster results in the design of a limited mission vehicle that is capable of putting one man into low earth orbit for a 24-hour mission with minimal life support and minimal crew member comfort. The purpose of the LMS project was to prove that a man can be put into space using a low payload booster.

ACKNOWLEDGMENTS

This work was conducted with the support of the Advanced Space Design Program of the Universities Space Research Association. This support is gratefully acknowledged. Principal author M. Bosset was assisted by K. A. Chase and J. Clegern. This paper summarizes the work of M. Bosset, G. Bulla, K. A. Chase, J. Clegern, M. S. Connelly, A. Est, C. Henry, M. Kaczmarek, B. Kelm, K. Le, D. Loveless, C. Neidhart, T. H. Peng, J. Plotkin, J. A. Sandusky, D. Sewell, J. Travisano, E. Vandersall, E. Villacis, and A. G. White. Faculty advisors were D. Akin, M. Lewis and C. Lind.

REFERENCES

1. Purser P. E., Faget M. A., and Smith N. F., eds., *Manned Spacecraft: Engineering Design and Operation,* Fairchild Publications, Inc., New York, 1964.
2. Singh Jasbir: *Heat Transfer Fluids and Systems for Process and Energy Applications,* Marcel Dekker, Inc., New York, 1985.
3. Sutton, G. P., *Rocket Propulsion Elements,* John Wiley & Sons, Inc., New York, 1986.
4. Huzel, K. Dieter and Huang, H. David, "Design of Liquid Propellant Rocket Engine," NASA Scientific and Technical Information Office, Washington, DC, 1971.
5. Morgan, N. E. and W. D. Morath, "Development of a Hydrogen-Oxygen Internal Combustion Engine Space Power System."
6. Adapted from Rockwell's block diagram for the Shuttle's Data Processing System.
7. Spitzer, C. R., *Digital Avionics Systems,* Prentice Hall Inc., New Jersey,1987.
8. Bate, R. R., Mueller D. D., and White J. E.; *Fundamentals of Astrodynamics,* Dover Publications, New York, 1971.
9. Dow, M. B., and Thompkins, S. S., "Materials and Design for Ablative Heat Shields," NASA TM X-2570, 1972.
10. National Aeronautics and Space Administration, "JSC Cost Model Summary" 1991 (converted by D. Akin).