TECHNICAL NOTES

NATIONAL ADVISORY COMMITTEE FOR AERONAUTICS

No. 662

GYROSCOPIC INSTRUMENTS FOR INSTRUMENT FLYING

By W. G. Brombacher and W. C. Trent
National Bureau of Standards

Washington
September 1938

NATIONAL ADVISORY COMMITTEE FOR AERONAUTICS

TECHNICAL NOTE NO. 662

GYROSCOPIC INSTRUMENTS FOR INSTRUMENT FLYING

By W. G. Brombacher and W. C. Trent

SUMMARY

The gyroscopic instruments commonly used in instrument flying in the United States are the turn indicator, the directional gyro, the gyromagnetic compass, the gyroscopic horizon, and the automatic pilot. These instruments are described. Performance data and the method of testing in the laboratory are given for the turn indicator, the directional gyro, and the gyroscopic horizon. Apparatus for driving the instruments is discussed.

INTRODUCTION

When the ground is not visible the navigation of aircraft depends solely upon instruments. Progress in instrument flying, as this type of navigation is called, rests largely upon the development of satisfactory instruments for maintaining straight, level flight, the proper course, and a safe altitude. It was discovered early that the indications of the magnetic compass and inclinometers of the gravity-controlled type could not be relied upon to maintain an airplane in straight, level flight due largely to the effects of acceleration of the aircraft. It soon became evident that the ultimate basis for satisfactory instruments is the gyroscope. The magnetic compass was found to be unreliable during turns from a northerly or southerly course, and unsteady in indication in bumpy air. Inclinometers of the type early available such as pendulums, rolling balls, or bubble levels, indicate accelerations as well as inclination, with no available means to differentiate between the two.

The gyroscopic instrument first used generally was the gyroscopic turn indicator developed in 1918 and 1919 (references 1 and 2). In this instrument a precession of the rotor is produced only by turning the instrument about its vertical axis. The precessional torque is balanced by a

spring. The turn indicator is used principally to differentiate between the conditions of straight flight and turning.

Attempts have been made to control the rotor speed of turn indicators in order to secure accurate indications of the rate of turn. Control of the speed of air-driven rotors requires a speed-measuring device or a device for measurement or control of volume air flow, both inconvenient on aircraft. The most practical solution would be the use of an electrically driven rotor, such as have been developed and are in limited use, mainly in research work (N.A.C.A. in this country) and on rigid airships. Their use in airplanes has been rendered almost needless by other developments.

The next improvement in the indication of direction was the Sperry directional gyro which indicates the heading both in straight flight and during turns (reference 3). The indication depends essentially upon a free gyroscope, the rotor axis of which theoretically holds a fixed direction in space. Actually, precessional torques are present causing errors in the indication of the heading. Therefore the indication must be periodically reset to correspond to that of the magnetic compass.

The magnetic compass, the turn indicator, and the directional gyro are now generally installed in every airplane equipped for instrument flying; at least two of these are essential, of which one must be the magnetic compass.

One phase of development work on direction instruments at present is focused on the possibility of adding a magnetic control to the directional gyro, in order to eliminate the necessity of periodically resetting the instrument. This development is the gyromagnetic compass described later in this report. If this instrument becomes available for service use, it can, theoretically at least, replace the three instruments now used; practically, considerable successful experience will have to be accumulated before the simple and relatively dependable magnetic compass is eliminated from airplanes. It is also probable that the turn indicator will be retained because of its usefulness in indicating approximate rate of turn.

The use of a gyroscopic compass similar in principle to the marine type has been proposed, but successful adap-

tation for aircraft use has not been achieved.

Parallel to the use of the direction instruments above-mentioned, extensive use is being made of radio devices to indicate direction and, in addition, to locate to a limited extent the position of the airplane. Two primary devices are available. In the first, which is extensively used, radio beams are projected on a desired course between two airports, in effect defining the airway. The airplane is equipped so that characteristic signals are received, permitting the pilot to fly the desired course without primary dependence upon the ordinary direction instruments in the airplane. With the radio beam the course flown is automatically corrected for the effect of drift caused by side winds and an indication of position is obtained whenever the airplane is over a course-sending station. The system suffers from the restriction that ordinarily only an indication of four courses to or from a radio station is secured, although procedures for interpolation between courses have been suggested. Further, fading of the beam occurs under certain atmospheric conditions and reflections of the beam in mountainous country cause errors in indication. Work is being centered on increasing the reliability of the system.

The second radio device involves the use of a radio direction finder on the airplane to locate the direction of a ground radio station with reference to the indicated magnetic heading of the aircraft. It is essentially a homing device and can be used to fly toward the station from any point from which a radio signal is obtained. The effect of drift caused by a side wind is not eliminated so that a curved course is generally flown, but this defect becomes relatively less important as the speed of airplanes is increased. This device is little used in this country, although some experimental work is in progress. The cathode-ray radio compass should be mentioned. In this instrument a cathode-ray tube is used as the indicator of the direction of a ground radio station. Considerable immunity from static and night effects is claimed.

The ground direction finder is used on European air lines and in air-line flights over oceans. The bearing of a radio transmitter on the airplane is taken by two ground stations, from which data the position of the airplane is determined and transmitted to the pilot.

The indication of pitch and bank of the airplane is

at present secured from a single gyroscopic instrument, the Sperry gyroscopic horizon (reference 3). A gravity control is provided to keep the rotor axis vertical and is so applied that the resultant precession is in one plane and not in a spiral path. In effect the instrument is a pendulum having a long period compared with the duration of disturbing accelerations such as occur in turns.

Automatic pilots are designed to hold the airplane on a desired heading and in level flight. No satisfactory automatic pilot has been developed in which the sensitive elements are a combination of pendulums and a magnetic compass, although a number of such pilots have been constructed. Apparently elements of the gyroscopic type are essential in order to obtain the relatively long period needed for stability during the accelerations experienced in the maneuvers of airplanes. In the Sperry automatic pilot (references 4 and 5) the airplane controls are positioned in accordance with the readings of the directional gyro and the gyroscopic horizon. Level flight is obtained automatically by controlling the pitch reading of the gyroscopic horizon with an altimeter element. The trend of development work at present is focused on making automatic as far as possible certain manual adjustments now periodically required.

The above survey on the course of development of instruments for instrument flying refers in general to work in the United States. In Europe a variety of gyroscopic instruments have been developed, some of which have survived the experimental stage (reference 2). However, many European air lines are using the gyroscopic instruments described above for indicating rate of turn, direction, pitch, and bank. Automatic pilots utilizing gyroscopes in a fundamentally different manner have been developed (references 6 and 7), notably the British automatic pilot (reference 8), the Pollock-Brown deviator, and the Siemens auto pilot.

In this report only gyroscopic instruments used and mainly developed in this country are considered. These are the turn indicator, the directional gyro, the gyromagnetic compass, the gyroscopic horizon, and the automatic pilot.

The report was prepared with the financial assistance and cooperation of the National Advisory Committee for Aeronautics. The performance data given herein was in large part obtained at the National Bureau of Standards in

cooperation with the Bureau of Aeronautics of the Navy Department.

TURN INDICATOR

Principle of instrument.- The sensitive element of the turn indicator is a rotor of relatively high inertia, the spin axis of which is parallel to the lateral axis of the instrument (references 1 and 2). The rotor is free to precess against the torque of a restraining spring, only about an axis parallel to the fore-and-aft axis. Precession about this axis is produced by turns about the vertical, or Z, axis. The deflection of the spring is indicated by a suitable mechanism. At the start of a turn the precessional torque L is given by the relation

$$L = W_p W_r I_r \tag{1}$$

in which W_r is the rate of rotation of the gyroscope rotor, W_p is the rate of turn of the aircraft, and I_r the polar moment of inertia of the gyroscope rotor. It is seen that if the rotational speed of the rotor W_r remains constant, the torque is directly proportional to the rate of turn of the aircraft.

When the spin axis of the rotor and the turning axis of the aircraft are not perpendicular to each other, W_p is the component of the rate of turn in the plane perpendicular to the rotor axis.

The instruments now in use are air-driven. The sources of power are discussed in the final section of this report. The rotational speed of the rotor is proportional to the volume flow of air through the instrument. The suction across the instrument, which is usually held constant, is to a first approximation proportional to the product of the air density and the square of the volume air flow. Thus, for a constant suction, it follows that the rotor speed varies with altitude and therefore that the sensitivity of the instrument in measuring rate of turn is variable.

A turnmeter, in contrast to a turn indicator, may be defined as an instrument which indicates reliably the rate of turn. A turn indicator becomes a turnmeter for all practical purposes if the speed of rotation of the rotor

is maintained constant. In an air-driven instrument this is obtained by maintaining a constant volume air flow (not necessarily constant suction) through the instrument. Simple means for controlling the air flow in aircraft are not available although some development work on devices integral with the turnmeter is in progress. For this reason direct-current electrically driven rotors have been usually used in turnmeters. The rotor speed is determined by the voltage, which is easily controlled. Up to the present, turnmeters have been used in this country only in flight research (reference 9).

Description.- A diagram of a Pioneer turn indicator which differs only in minor details from the latest types, is shown in figure 1. The rotor W is mounted in gimbal G which is free to rotate or "precess" about the fore-and-aft axis A_1A_2. Disk D is attached to the gimbal. The precessional torque of the gimbal and wheel assembly is balanced by spring S through lever L connected by pin B to the disk D. The motion is damped by means of the dash-pot assembly C, the piston of which is attached to L by lever PL. Precessional motion is communicated from the disk D to the pointer P by means of a pin E and a fork F which is attached to the pointer shaft. In order to permit variation of the sensitivity, an adjustment is provided for varying the tension of the spring by moving the fixed end in or out. This motion causes no zero shift because the axis of the spring passes through the axis A_1A_2 of the gimbal. The damping is adjusted by varying the size of the orifice controlling the air flow into and out of the dash pot. The air supply for driving the gyroscope wheel is drawn in through a fine-mesh screen at N_1 and out at N_2. The rubber stop R serves to absorb the shock of excessive rates of precession.

As shown in figure 2, the turn indicator is usually combined with a rolling ball bank indicator. The glass ball, 7/16 inch in diameter, now used, has less deflection due to airplane vibration than the steel ball previously used.

The diameter of the dial is 2-3/4 inches. The weight of the combined turn-and-bank indicator is 1.3 pounds.

The turn indicator is designed to operate on a suction of about 2 inches of mercury.

Laboratory test apparatus.- The essential parts of the apparatus used at the National Bureau of Standards for obtaining specified rates of turn are shown in figure 3. The turntable TT is driven by an electric motor through suitable reduction gearing. An adjustable speed direct-current motor is preferably used for controlling the rates of turn although test equipment is available commercially in which the motor speed is constant and a number of rates of turn are obtained by suitable gear shifts. The turn indicator T, mounted on the turntable, is connected to a vacuum pump by rubber tubing which, as shown, is of a length sufficient to permit rotation of the turntable without interfering with the air supply. A U-tube water manometer, or more conveniently a differential pressure gage, is used to measure the suction across the turn indicator. The rate of turn is determined by noting the time required for the turntable, suitably graduated in degrees of arc, to rotate a definite amount.

When determining the effect of temperature the apparatus is installed in a chamber, as indicated in figure 3, with the motor and gear-box assembly installed outside. Precautions must be taken to prevent condensation of water vapor in the instruments at low temperature. Cheesecloth of large area over the air inlet of the instruments will keep out any snow that may form.

Tests and performance.- Ordinarily the turn indicator is used only to indicate deviations from flight in a straight line rather than the actual rate of turn. For this use it is important that the pointer be exactly on the zero mark at zero rate of turn. In the laboratory the behavior in this respect is determined by observing the instrument when it is held in the normal dial-vertical, pointer-vertical position with the rotor operated by a suction of 2 inches of mercury.

The pointer should stand at the zero mark when the rotor is not running. In a new instrument a zero indication shows that the mechanism is in static balance.

In the test for sensitivity, the instrument is installed in the dial-vertical, pointer-vertical position on the turntable described above and is operated under a suction of 2 inches of mercury. The turn indicator is subjected to rates of turn about a vertical axis of 36°, 360°, and 1,080° per minute at an atmospheric pressure of 760 millimeters of mercury and temperature of 20° C. Different

deflections of the tip of the pointer for these rates of turn are desired by the Army, Navy, and the air lines, and perhaps should vary with the type of airplane. One organization specifies this deflection to be, respectively, 1/16, 1/2, and 1 inch, with a tolerance of about 15 percent. Another specifies a deflection about 40 percent lower. The sensitivity, or deflection for a given rate of turn, increases with increase in the impressed suction at constant atmospheric pressure, and increases with increase in altitude when the suction is held constant. As previously stated, the sensitivity of individual instruments is adjustable to meet the requirements in the various types of airplanes.

The performance at low temperature depends primarily upon the pour point of the lubricant used. Mineral oils which have a sufficiently low pour point will give a satisfactory performance at -35° C., but will evaporate at high summer temperature. Synthetic lubricants of low-vapor pressure offer some promise for instruments which are subjected to a wide range of temperature. In tests at -35° C., instruments with low pour-point lubricant have a pointer deflection of about 3/8 inch when subjected to a turn of 360° a minute, compared with 1/2 inch at room temperature.

The damping is measured by suddenly stopping a turn of 1,080° per minute and observing the subsequent pointer oscillations on each side of zero. The damping is considered insufficient if the pointer in coming to rest has after its first crossing a deflection beyond the zero mark exceeding 1/4 inch or after its second crossing 3/64 of an inch. It should be noted that unless the turntable is positively stopped, the return of the rotor to the axis-horizontal position imparts a torque to the turntable tending to cause the rotation of the table to continue. The effect of this is a slower return of the pointer to zero, with a resultant error in the determination of the damping.

Except for increased wear in the bearings, vibration such as is experienced on an instrument board does not appear to affect the performance of the turn indicator. In laboratory tests for vibration the instrument is subjected to a circular motion 1/32 inch in diameter in a plane inclined 45° to the horizontal plane and with frequencies from 1,000 to 2,500 cycles per minute. A description of the apparatus is given in reference 10. Satisfactory instruments will withstand this standard vibration for 50

hours without substantial change in the pointer sensitivity. During the test the instrument is mounted in its normal operating position and is operated under a suction of 2 inches of mercury. A test in which the instrument would be subjected simultaneously to vibration and to a continuously varying rate of turn would probably be more significant.

The instrument is tested for durability and effect of excessive suction by operating it on a suction of 10 inches of mercury for a period of 1/2 hour while stationary in the normal operating position. The position of the pointer for zero rate of turn, with or without a suction of 2 inches of mercury applied, should remain unchanged.

The suction to start the rotor should not exceed 5 inches of water. The free air flow through the present instrument at a suction of 2 inches of mercury with sea-level external pressure is 0.6 cubic foot per minute.

For all practical purposes the time lag in the pointer motion of gyroscopic turn indicators is negligible.

DIRECTIONAL GYRO

Principle of the instrument.- In straight flight and in quiet air the magnetic compass is normally reliable as a direction indicator. When the airplane executes a maneuver, or when the air is bumpy, the compass card may be expected in general to depart from its proper orientation or in the extreme case to spin. The combined effect of the vertical component of the earth's magnetic field and of accelerations on the pendulous card causes the error.

The Sperry directional gyro, used in conjunction with the magnetic compass, provides a directional reference comparatively unaffected by maneuvers of the airplane. The instrument is essentially a neutral or free gyroscope with three degrees of freedom. The rotor is horizontal in order to give the necessary reference in azimuth.

The directional gyro is not in itself north-seeking. It must be set to correspond to the compass heading or to the desired heading as determined with the compass or other known reference, and must be reset more or less often to

correct for a slow and, up to the present time, unavoidable precession in azimuth.

Description.- The mechanism of the Sperry directional gyro is shown in figure 4 and a photograph of the instrument in figure 5. The rotor W is air-driven about a horizontal axis. The air, drawn into the case through the bearing B and through the tube J, impinges on steps cut into the periphery of the rotor. On aircraft, reduced pressure within the case is maintained usually by a vacuum pump but occasionally by a venturi tube.

The rotor is mounted in the first gimbal FG, which is free to turn about a horizontal axis HH_1. The second gimbal SG is free to turn on a vertical axis about the pivot P and the bearing at B, which are fixed to the instrument case.

As seen in figure 5, a compass card and a lubber line are viewed through a window in the face of the instrument. The graduations are in 1° intervals. The card, attached to gimbal SG (fig. 4), may be set to a desired heading, with an over-all limit of accuracy of about 1°, by means of an adjusting knob K which projects through the front of the instrument. To make the adjustment, the knob is pushed in, depressing the outer end of the lever L, thereby raising the collar C. The arm A, raised by the collar C, engages the first gimbal FG at E and moves the axis of the rotor to horizontal. The gear on the knob K is now in mesh with the gear ring R which is fastened to the second gimbal SG. The entire mechanism may be rotated until the desired reading on the card is opposite the lubber line. The knob is then withdrawn, freeing the rotor and gimbals.

A correcting torque can be applied by adjusting the nut on screw BA when the precession in azimuth is excessive.

The instrument is constructed so that it may be inclined 60° from the normal in any direction, pitch or bank. When the inclination is in excess of 60° about an axis perpendicular to the rotor axis, the gimbal system meets stops, upsetting the gyroscope and making the indication worthless until the instrument has been reset.

The weight of the instrument is 3.6 pounds. In size it is approximately a $4\frac{1}{2}$-inch cube.

Instruments are constructed either with or without a bank indicator similar to that of the turn-and-bank indicator.

PRECESSION

General discussion.- The rotor axis of a perfectly balanced free gyroscope, not subject to extraneous torques, would remain in a fixed direction in space with reference to the fixed stars.

It is impossible to eliminate entirely precessions due to extraneous torques. The precession caused by a torque about an axis perpendicular to the spin axis will be about an axis perpendicular to both the spin axis and the torque axis. The angular rate of precession P is

$$P = \frac{L}{W_r \, I_r} \tag{2}$$

where L is the torque causing the precession, W_r is the angular rate of rotation about the spin axis, and I_r is the polar moment of inertia about the spin axis.

To obtain a precession in azimuth, about axis PB (fig. 4), a component of a torque must act about axis HH_1 on inner gimbal FG.

Assume a torque applied to the inner gimbal FG about the axis HH_1, in a clockwise direction as observed when looking along the axis from H to H_1. With the rotor turning in the direction shown in figure 4, the torque causes the rotor to precess about the axis PB in a clockwise direction as seen from above. The axis of precession is perpendicular to both the rotor axis and the axis of the torque. If the axis of the torque does not lie in a plane perpendicular to the spin axis of the rotor, only the component of the torque perpendicular to the axis of the rotor is effective in causing precession.

Causes of precession in azimuth.- Causes of the precession which gives rise to erroneous indication of the course are as follows:

(a) Small eccentricities in the direction of the air jet striking the rotor may give rise to a torque about axis HH_1, thereby causing a drift.

(b) Unbalance of the rotor gimbal (FG in fig. 4).

(c) Friction in the bearings of the rotor gimbal (FG) during relative rotation of gimbals FG and SG. This rotation occurs during pitching of the aircraft when the rotor axis is in the fore-and-aft position, and during roll when the rotor axis is in the lateral position.

(d) The earth's rotation (apparent precession).

Of the above sources of precession only (d) can be considered quantitatively since most of the other sources are indeterminate. A free gyroscope such as the directional gyro should maintain, theoretically, the direction of its rotor axis fixed in space with respect to the fixed stars. It follows therefore that the angle between the rotor axis and a given direction on the earth's surface varies with time, at a definite rate depending upon the latitude and orientation of the axis. No torque is imposed primarily as a result of the earth's rotation.

In considering the effect of the earth's rotation the airplane will be assumed stationary since the effect of the motion of the airplane is usually much smaller than that of the earth's rotation. If it is desired to include the motion of the airplane it is necessary to use, instead of the earth's rate of rotation, the true angular motion in space along the parallel of latitude.

Instruments are now constructed so that the axis of the rotor is in the meridian, or very nearly so, when the instrument is set with the card indicating the true heading of the airplane. This rotor position will be assumed initially in considering the effect of the earth's rotation.

At the equator the rotor axis remains in the meridian since both the rotor and meridian are parallel to the earth's axis. No change in indication with time occurs.

At the North or South Pole, the rotor axis changes in azimuth at the same rate as the angular rate of rotation of the earth. That is, the rotor axis is observed to rotate about axis PB (fig. 4), at a rate of 0.25° per minute. The reading of the card of the directional gyro decreases at the North Pole and increases at the South Pole.

At latitudes between the equator and pole, the rotor axis tends to change direction with respect to a meridian

in both azimuth and pitch - that is, about both axes PB and HH_1. The change in azimuth α or change in indicated course is given by the expression

$$\alpha = E \sin \lambda \tag{3}$$

where E is the angular rotation of the earth in the time subsequent to resetting the directional gyro (0.25° per minute), and λ is the latitude. The rates of change in reading are 0°, 0.125°, 0.18°, and 0.215° per minute, respectively, at latitudes 0°, 30°, 45°, and 60°.

As will be brought out later, the effect of the earth's rotation is, on the whole, quite small in contrast to the precession due to other causes and from the practical standpoint can be neglected.

Compensation for precession in azimuth.- It is theoretically possible to provide a torque due to unbalance in the gimbal system which will introduce a precession compensating the drift in indication caused by constant extraneous torques and by the earth's rotation at one specified latitude. In practice this is accomplished by adjusting the unbalanced weight BA (fig. 4) until the observed precession at the approximate latitude at which the instrument is to be used is reduced to the lowest possible amount.

It may be of interest to calculate the torque required to cause a precession in azimuth which is just sufficient to counterbalance the change in reading which occurs due to the earth's rotation at a latitude of 45°. It can be shown that

$$L = P\, W_r\, I_r \tag{4}$$

where L is the balancing torque; P is the rate of precession due to the earth's rotation about the azimuth axis, that is, the rate of change of α in equation (3); and W_r and I_r are, respectively, the angular velocity and polar moment of inertia of the rotor. The value of I_r for the gyroscope rotor is approximately 0.23 pounds inches^2. The torque L equals 0.004 pound inch when P is 0.18° per minute (at a latitude 45°) and the rotor speed is 12,000 r.p.m.

Tilt of the rotor axis.- A torque, or component of a torque, about the vertical axis PB causes a tilt of the rotor axis, that is, precession about axis HH_1, figure 4.

Causes of this tilt of the rotor are produced as follows:

(a) Friction in the bearings of the vertical gimbal (PB, fig. 4). The tilt occurs during turning or yawing of the aircraft.

(b) The earth's rotation.

Assuming the axis of the rotor initially in the meridian and horizontal, the tilt of the rotor axis due to the earth's rotation is given by the relation:

$$\sin T = \sin 2\lambda \sin^2 E/2 \qquad (5)$$

in which T is the tilt in degrees; λ is the latitude; and E is the angle through which the earth rotates subsequent to resetting the instrument (0.25° per minute).

It is seen that there is no tilt at the equator ($\lambda = 0$) or at the poles ($\lambda = 90^\circ$). Between latitudes 30° to 60°, the tilt is less than 1° in one hour (corresponding to a rotation of the earth of 15°) and less than 4° in two hours (after a rotation of 30°).

Compensation for tilt.- It will be noticed in figure 4 that the rotor axis tilts independently of the air-supply tube. When the rotor axis tilts, the air jet strikes the rotor at an angle, causing a torque about a vertical axis (PB, fig. 4) and giving rise to a precession which tends to return the rotor axis to alinement with the supply tube. This torque is sufficient ordinarily to maintain the rotor axis practically horizontal in level flight.

Performance of the Directional Gyro

Test apparatus.- To determine the effect of suction, air density, and temperature upon the rotor speed, the directional gyro and necessary apparatus were set up in a low-pressure chamber as shown in figure 6. The temperature could be controlled in the range -20° to $+50^\circ$ C. The rotor speed and air flow were measured under various conditions of temperature, air pressure, and suction across the instrument. The speed of the rotor was measured by means of a stroboscope.

In the acceptance testing of the directional gyro it is

the practice to measure the precession in azimuth, hereafter called the drift, under various conditions of temperature, vibration, and inclination. The drift of the card is measured at present while the instrument is subjected to a combined pitch, roll, and yaw motion having an amplitude of 1.5° and a frequency of 10 per minute. This motion approximates the oscillations of the airplane in flight, thereby giving a test approximating service conditions. The apparatus producing this motion, called a "scorsby," was developed by the Sperry Gyroscope Company. Figure 7 is a photograph of the apparatus, including a dry-ice temperature chamber which has been mounted on the rocking table.

It is also of interest to obtain the drift when the instrument is subjected to a low-amplitude vibration. One having a frequency of about 1,800 c.p.m. and amplitude between 0.002 and 0.004 inch is considered reasonably representative. This vibration is available from the standard vibration board used in testing aircraft instruments (reference 10) or from a spring-mounted board vibrated by a rotating weight mounted eccentrically upon a shaft.

Chambers for controlling the temperature of aircraft instruments have been previously described (reference 10). The use of solid carbon dioxide (dry ice) as a refrigerant is quite convenient and is probably preferable in cases where other means of securing low temperature are not already installed. A desirable detail in temperature chambers of this type is a set of shutters between the compartment containing the dry ice and the rest of the chamber. Much closer temperature control can be obtained by adjusting the shutters than by varying only the speed of the ventilating fan above the dry ice.

At low temperature the arrangement for the air flow must be such that (a) no moisture condenses within the instrument, (b) no oil vapor from the vacuum pump enters the instrument and (c) the temperature within the test chamber does not change.

If the vacuum pump operates at low temperatures it can be cooled either with the instruments or in a separate temperature chamber, whichever is more feasible. The air flow is then arranged so that air enters the instrument, goes through the pump, and then is piped back into the instrument temperature chamber. An oil trap and perhaps a drier are required in the return line. This procedure is substantially that followed by the Sperry Gyroscope Company.

In the arrangement at present used at the National Bureau of Standards, the air enters the instrument from the temperature chamber, goes through the vacuum pump, and then is discharged outside the building. The air thus removed from the temperature chamber is replaced by a diaphragm pump which supplies air free from oil vapor. The air from the pump passes through a drier, then is cooled below the chamber temperature in a coil cooled by solid carbon dioxide in alcohol. The moisture content is then such that condensation will not occur at the chamber temperature. It is usually desirable to shield the instrument inlet with cheesecloth to filter out snow which may possibly form in the temperature chamber.

If the air flow is to be measured at low temperature, an orifice-type flowmeter or the common type gas meter may be used. The gas meter must be operated at approximately room temperature. This condition can be secured by running a long line of copper tubing outside of the temperature chamber between the exit port of the instrument and the gas meter. The temperature and pressure of the air passing through the gas meter must be measured so that the air flow can be computed in terms of that at the desired density.

When solid carbon dioxide is used as the refrigerant, the arrangement is usually such that the carbon dioxide mixes with the air flowing through the instrument. If a constant suction across the instrument is maintained, the speed of the rotor of the instrument will decrease with increase in the carbon-dioxide concentration, as may be seen from the following approximate relation:

$$\frac{R_a}{R_c} = \sqrt{\frac{\rho_c \; S_a}{\rho_a \; S_c}} \qquad (6)$$

in which R is the rotor speed, ρ is the gas density, and S is the suction. The subscripts a and c refer, respectively, to the quantities when the instrument is driven by air and by an air carbon-dioxide mixture. Using 100 percent carbon dioxide, the rotor speed is 81 percent of the speed for air. To maintain constant rotor speed using 100 percent carbon dioxide, the suction must be 1.53 times that when using air. It appears essential either to prevent carbon dioxide from mixing with the air flowing through the instrument or to maintain constant volume gas flow through the instrument since, as will be shown later,

the rotor speed is proportional to the volume gas flow, independent of gas density.

Effect of air flow, suction, and air density upon rotor speed.- The rotor speed of the directional gyro at various suctions and altitudes is shown in the upper part of figure 8. In figure 9 the rotor speed against air flow in terms of the volume at the pressure and temperature of the air at outlet of the instrument is shown for two instruments.

The results shown are typical of those obtained on other instruments in good adjustment. These results, obtained in 1932, in general agree with those reported by Spilhaus (reference 11).

The following conclusions can be drawn from the data obtained when the instrument was at room temperature (+22° to 31° C.).

(a) At a given imposed suction the rotor speed increases with altitude and is inversely proportional to the square root of the air density.

(b) The relation between the volume air flow and rotor speed is linear and is independent of the air density (or altitude). It follows that

$$R = K_1 F \tag{7}$$

where R is the rotor speed

F, the volume air flow

and K_1, constant

The air flow through the instrument is approximately equivalent to that through an orifice. Therefore,

$$\Delta p = K_2 \rho V^2 = K_3 \rho F^2 \tag{8}$$

where Δp is the suction across the instrument

ρ, the air density

V, the mean velocity of the air

and K_2 and K_3, constants

Substituting the value of the air flow F from equation (7) into equation (8),

$$R = K \sqrt{\frac{\Delta p}{\rho}} \tag{9}$$

The data shown in figure 8 for instrument No. 287 verify equation (9).

It is the present practice on aircraft to maintain a constant suction across the directional gyro with the valve described later. From (a) and (b) above it is evident that a constant rotor speed would be maintained if the volume air flow were held constant. This fact has been generally known for some time but no convenient means has been developed to measure, or automatically regulate, air flow in flight. The maintenance of constant speed is perhaps not essential since the excess speed obtained is probably not detrimental to the mechanism and does not materially affect the drift of the card. Decrease in instrument temperature as the altitude is increased tends to reduce the rotor speed, partly compensating for the increase in rotor speed with reduced density.

Normal operating suction and air flow.- A differential pressure across the instrument (suction) of $3\frac{1}{2}$ inches of mercury is generally accepted as the standard value. At this suction, as may be seen from figures 8 and 9, the air flow is approximately 1.3 cubic feet per minute measured at an air temperature of 20° C. and at a pressure of 26.5 inches of mercury. Instruments constructed in 1937 have an air flow of 1 to 1.3 cubic feet per minute.

Effect of instrument temperature on rotor speed.- It is seen in figure 8 (instrument No. 759) that at a given suction the rotor speed decreases as the temperature of the instrument decreases. This is apparently due to a slight increase in friction.

In early models of the instrument the temperature effect was large, due to a differential contraction which caused the rotor axle to be squeezed between the bearings. A spring mounting eliminated this effect.

The variation of the air flow rotor speed with instrument temperature is shown in figure 9 (instrument No. 563). The same straight line fits the data at instrument temperatures down to +5° C. At -5.5° C. a linear relation still holds but the line has shifted upward.

Drift of the card in azimuth.- The preceding sections on the performance of the directional gyro are principally of interest to the designer. To the pilot of the aircraft the chief interest is in the drift of the card under various conditions of use. The most important factor affecting the drift appears to be vibration. It is believed at the present time that 0.012 inch is the maximum double amplitude of standard circular vibration which the instrument should be expected to withstand. This is probably the limiting amplitude for other types of vibration although no test data are available on this point. It is considered essential, however, that the instrument be subjected to a slight vibration - say, one with a double amplitude of 0.002 inch to 0.004 inch, in order to obtain a minimum drift. This drift is believed to be further reduced if the instrument is subjected to an irregular roll, pitch, and yaw motion of small amplitude, such as that of an airplane in reasonably straight flight. These conclusions are founded upon laboratory and flight experience but are very difficult to prove by a series of tests on a few instruments or by reference to a limited amount of data, because of the erratic manner in which the directional gyro drifts.

An investigation was made at the National Bureau of Standards in 1934 on instruments then available, in which the drift for 30 to 40 minutes was measured at eight headings at intervals during the course of endurance runs lasting as long as 255 hours. For the greater part of the time during the endurance runs, two instruments were vibrated and three were not vibrated. The frequency of vibration was 1,800 c.p.m. and the diameter of the circular vibration was 0.012 inch. The drift measurements at intervals were made with no vibration imposed and with circular vibration either 0.002 or 0.012 inch in diameter. The driving suction was 4 inches of mercury. During the tests the instrument temperature was approximately +20° C. and the atmospheric pressure, 29.5 inches of mercury. The results may be summarized as follows:

(a) The drift was erratic to a high degree, varying from test to test at a given heading and from heading to heading for a given instrument. The drift might be zero in one test and then be 4° or 5° in 20 minutes in a later test.

(b) No marked difference in the drift was observed between tests with and without vibration.

(c) No decided increase in the drift was observed during the endurance runs.

(d) Vibration with a double amplitude of 0.012 inch apparently caused no deleterious effects.

No observations were made on the effect of air density (altitude) on the drift. There appears to be no reason for any significant effect.

Drift tests are now made on a scorsby set to give a roll, pitch, and yaw motion having a frequency of 10 per minute and double amplitude of 3°. This motion simulates conditions in an airplane which it is believed, with considerable reason, reduce the friction in the instrument bearings and thus tend to make the drift less erratic. Results obtained on three satisfactory 1937 directional gyros are presented in table I.

Drift tests are also made when the instruments are vibrated at a frequency of about 1,800 c.p.m. and at a double amplitude in the 45° plane of 0.003 inch. The results on three instruments are given in table I.

Effect of temperature on the drift.- The drift when the directional gyro is at a temperature of -20° C., and subjected to the roll, pitch, and yaw described above, is given for three instruments in table I. The drift of instrument No. 2 is excessive at two headings. The difficulty in securing satisfactory performance is mostly due to the difficulty of securing a lubricant which functions in the temperature range from -20° to +50° C. Operation at still lower temperatures emphasizes the difficulty.

The rotors start turning at an instrument temperature of -35° C. at driving suctions well under 2 inches of mercury.

Effect of rotor speed on drift.- Drift tests were made on two instruments built in 1933 at suctions of 2, 4, and 6 inches of mercury. The instruments were neither vibrated nor subjected to the pitch, roll, and yaw motion. No significant differences in the amount of the drift were observed for the three suctions, except that perhaps the drift was less at the suction of 4 inches of mercury.

Inclination.- The instrument as now designed operates at any angle of tilt of the case from the vertical up to a change of 60° from the normal position.

TABLE I

Performance of Three 1937 Directional Gyros

Drift in degrees of arc
Operating suction, $3\frac{1}{2}$ inches of mercury

Original heading deg.	Instrument No.					
	1		2		3	
	1st test	2d test	1st test	2d test	1st test	2d test
Drift in 10 minutes on scorsby at +25° C.						
0	+0.7°	+0.8°	+1.0	+1.6	-2.0	-1.4
90	+2.6	+3.6	-2.2	-1.5	-1.2	-1.8
180	+1.0	-.8	.0	+.4	-3.5	-1.7
270	+3.0	+3.0	-2.0	-1.8	-3.4	-.4
Drift in 10 minutes on scorsby at -20° C.						
0	-1.5	-1.5	+4.0	+2.0	-5.0	-4.0
90	+3.5	+3.5	-1.0	-1.5	-3.0	-2.0
180	-1.5	+.5	-9.5	-8.5	-3.5	+.5
270	+4.5	+7.5	-4.5	-9.0	-2.5	+.5
Drift in 15 minutes at +25° C. Vibrated at 1,800 c.p.m., 0.003 double amplitude						
0	+1.0	+0.2	-4.0	-2.0	+2.0	+2.2
90	-2.0	-1.8	-2.0	-1.5	-1.0	+1.0
180	+1.8	+2.3	.0	+2.6	+1.0	+.5
270	-2.8	-3.8	+3.0	+3.2	-2.0	-2.7

The drift with the case and rotor axis both tilted 15° and with the instrument subjected to a low amplitude vibration differs but little from the drift in the normal operating position.

Rotor-bearing friction.- Tests for friction of the rotor bearings are most easily made by determining the amount of suction required to start rotation of the rotor and the time the rotor will operate after the suction is cut off. The suction necessary to start the instrument at a temperature of 20° C. is approximately 1/8 inch of mercury. This suction may increase to 2 inches of mercury at a temperature of -20° C.

The rotor of an instrument in good operating condition running initially at the normal operating speed, and at a temperature of 20° C. will coast for more than 10 minutes after the suction is cut off.

Effect on compass reading.- Since the directional gyro is ordinarily mounted quite close to the magnetic compass, it is essential that its effect on the compass reading be small. Usually the effect of aircraft instruments upon the reading of the compass is observed when the instruments are 8 inches apart, measured from center to center. Under this condition, new directional gyros will not cause the compass reading to change by an amount exceeding 1°. When the instruments are adjacent, the compass reading may be affected by as much as 5°. The effect varies in amount with the orientation of the rotor with respect to the compass card. It is important that the use of magnetic materials be eliminated insofar as possible, since any ferrous parts may become magnetized in service.

Effect of vibration.- Data collected mainly by the Sperry Gyroscope Company indicate that jars and shocks such as are experienced in take-off and landing of airplanes affect the reliability of the instrument more seriously than long-continued vibration of the type ordinarily experienced on instrument boards in flight. Best performance is obtained by eliminating the shocks and holding the vibration to low amplitude. For this reason the directional gyro is usually mounted either on an instrument board which is vibration-insulated from the airplane or on one of several designs of antivibration mounts. Satisfactory types of flexible suction connection for the instrument have been developed.

GYROMAGNETIC COMPASS

The directional gyro has the primary defect of erratic drifts in reading which appear to be unavoidable as long as a free gyroscope is used. J. B. Peterson of the National Bureau of Standards, and Guido Wunsch of Askania-Werke Aktiengesellschaft, independently have proposed holding the rotor assembly fixed with respect to the magnetic meridian by means of a suitable torque controlled by a pivoted magnetic element.

A schematic drawing showing the principle of Peterson's instrument, called a gyromagnetic compass, is shown

in figure 10. The rotor R is mounted in an airtight housing H, except for an air inlet for driving the rotor and four exhaust ports at D_1, D_2, D_3, and D_4. The two-pivot magnetic element, the magnets of which are M, is mounted outside of the housing H. The suction source for driving the rotor is connected to the outer case at B. The air enters at A, passes through the hollow gimbal G to a nozzle from which it impinges on the rotor.

Pendulum P controls the air flowing through ports D_3 and D_4 into the outer case from exits T_1 and T_2, thereby stabilizing the housing H so that the axis of the magnetic element (E and M) is maintained in the vertical plane containing the magnetic meridian. It should be noted that stabilization of the axis in this plane is sufficient to prevent any effect of the earth's vertical field, thereby eliminating northerly turning error. It can be demonstrated that slightly inclining the axis of a two-pivot compass away from the vertical to the north or to the south does not cause a change in its reading. However, some northerly turning error remains because the method of stabilization is not perfect.

Magnetic element E controls the air flowing through ports D_1 and D_2, stabilizing the rotor axis in a magnetic east-west direction, and giving the reference direction for determining the heading of the aircraft.

The pendulum-controlled and magnetic-controlled air jets both exert comparatively weak torques, causing the gyroscopic axes to follow slowly. Thus, short-time oscillations of the pendulum due to horizontal accelerations and short-time oscillations of the magnetic element due to vibration do not deflect the gyroscopic axis appreciably from its average orientation.

The card C, seen through window W, is attached to gimbal G. It is read with reference to lubber line L which is attached to the case of the instrument. In flight it is obvious that the lubber line turns with the airplane, while the card holds a position fixed relative to the magnetic meridian.

Development of this instrument has been undertaken by the Sperry Gyroscope Company. An experimental model is shown in figure 11. Among the design problems which had to be solved was the necessity for eliminating to the utmost all magnetic materials in the instrument in order to obtain

satisfactory performance of the control magnets. Chiefly, this meant finding a substitute for ball bearings, and the problem was solved by the use of air bearings for the gimbals and plain bearings for the rotor.

Vibration and shock absorption is provided integral with the instrument. This consists essentially of rubber acting in shear. Individual lighting is provided. In this latest model the suction requirement has been reduced to 4 inches of mercury, at which the air flow is 2 cubic feet per minute at sea level. At this suction the rotor speed at sea level is approximately 12,000 r.p.m. Provision is made for setting rotor unit so that the proper heading is approximately indicated, thus reducing the time before reliable readings are obtained.

A compensator, similar to that used in other magnetic compasses, is provided to neutralize the effect of the disturbing magnetic field produced by the magnetic materials in the airplane. The compensator is built into the lower section of the instrument case and is adjustable from the front as shown in figure 11. Compensating the installed gyromagnetic compass has proved to be a much slower process than with a magnetic compass, due to the necessity of waiting until the magnetic element has brought the rotor and card unit to an equilibrium position following each adjustment of the compensator. As a simplification of the procedure, J. B. Peterson proposes if practicable in the final design that a magnetic card compass with the compensator from the gyromagnetic compass be installed in the airplane. The compensator can then be set much more easily. For the compensation to be equivalent, it is essential that the compass magnets and compensator be in exactly the same relative position as the gyromagnetic compass magnets and compensator, and that the point of installation be identical for the two units. After the compensation has been completed the gyromagnetic compass and the compensator are installed without disturbing the adjustment of the compensator.

GYROSCOPIC HORIZON

The Sperry gyroscopic horizon is a gyroscope with three degrees of freedom and with means for producing a righting torque when the axis of the rotor deviates from the vertical. The righting torque is produced by air jets controlled by pendulously operated valves. In effect, the

instrument under the action of the air jets behaves like a long-period highly damped pendulum. This method of producing the righting torque has the distinct advantage of bringing the rotor axis to the vertical in a direct straight path, in distinction to the spiral path which would be followed if the rotor unit itself were pendulously suspended.

Description

A diagrammatic view of the gyroscopic horizon is shown in figure 12 and a photograph in figure 13. The rotor axis is vertical. The rotor unit is mounted in housing C. The air operating the rotor enters at E, passes into the housing at the gimbal, and leaves at the four ports V. The housing is free to turn about a lateral axis, one pivot of which is shown at L, and about a fore-and-aft axis through the gimbal which is pivoted at B_1 and B_2, figure 12.

The orientation of the aircraft relative to the rotor axis is indicated. If the airplane banks or rolls, the external instrument case tilts with reference to gimbal G, to which is attached pointer P. The position of P relative to scale LS is the indication. The bar H, pivoted to gimbal G at A, also indicates the tilt.

If the airplane pitches or otherwise changes its fore-and-aft position with reference to the horizontal plane, the case tilts on axis L, and bar H is rotated about axis A by pin R which is attached to rotor housing C. The position of bar H relative to an index on the case in the form of a small airplane (fig. 13) indicates the amount of the fore-and-aft tilt of the airplane.

Pendulous gates W control the air flow from the ports V. In the normal position of the rotor unit, the four ports are half open if there is no acceleration of the airplane. If the rotor axis is tilted and the gates hang vertically, the jet reaction causes a torque in such a direction as to right the rotor unit. For example, assume that the rotor-unit axis is tilted about a lateral axis in a clockwise direction. The port V_1 visible in figure 12, is closed by its gate but the corresponding port on the opposite side (not visible) opens fully. The resulting counterclockwise torque on unit C about axis L rights the rotor unit. The torque disappears when the ports on opposite sides are equally open.

It is obvious that when an acceleration with a horizontal component acts, the gates or flippers will deviate from the vertical, closing to some degree one or more ports. The torque so produced will tend to deflect the rotor unit from the vertical and thus produce an erroneous indication. The saving factor is the slow rate at which the torque produced by the air jet rotates unit C as compared to the time required for an airplane to execute an ordinary maneuver such as a turn. The maximum rate of precession of the rotor unit produced by the air jets is of the order of 1° in 6 seconds. The maximum error in indication occurs in a turn of 180°. A theoretical treatment of the performance in a steady turn is given in reference 12.

One type of modern gyroscopic horizon is equipped with a caging device as indicated in figure 13. This permits the rotor to be caged during maneuvers and reset when the rotor axis is off the vertical.

The instrument indicates over the range of $\pm 60^{\circ}$ of fore-and-aft inclination and $\pm 90^{\circ}$ of lateral inclination.

The indication in pitch for level flight changes as the angle of attack of the airplane changes, which occurs with alteration in air speed or total weight. In some types of gyroscopic horizon provision is made for adjusting the position of the miniature airplane (fig. 13), the center of the bar indicating pitch.

The weight of the instrument is 4-1/4 pounds. It is roughly a cylinder 6 inches deep and 4-3/4 inches in diameter.

Performance of the Gyroscopic Horizon

The test apparatus for the gyroscopic horizon is the same as that described for the directional gyro.

Effect of air flow, air density, and suction upon rotor speed.- The variation of the rotor speed with suction is shown in figure 14 for sea level and for 27,000 feet. The relation between rotor speed and volume air flow measured at the outlet of the gyroscopic horizon is presented in figure 15.

It will be noted that rotor speed is not directly proportional to the volume air flow, whereas a linear relationship was found for the directional gyro. This dif-

ference in performance is probably due to the difference in design, the rotor unit of the horizon being much more closely housed. The air-flow characteristics of the horizon differ much more from those of an orifice than do those of the directional gyro.

The relation at room temperature between the suction S, the rotor speed R, and the air density ρ at the air entrance to the horizon appears to have the following form on the basis of the limited data given in figure 14:

$$\sqrt{S} = K_1 R\sqrt{\rho} + \sqrt{S_0} \tag{10}$$

Also the following approximate relation between the suction S, the volume air flow F, and the air density ρ, which holds at suctions above 1.5 inches of mercury is obtained from the data shown in figures 14 and 15:

$$S = K_2 \rho F^2 + S_0' \tag{11}$$

In the above equations K_1, K_2, S_0, and S_0' are constants.

Equations (10) and (11) can be combined by eliminating S so as to obtain the rotor speed R as a function of the air flow and the air density, but the practical value of the result is doubtful.

It has become the general practice to keep suction constant by means of the automatic regulating valve used also for the directional gyro and the turn indicator. When so regulated the rotor speed increases with increase in altitude, but the increase in rotor speed is partially canceled by any reduction of instrument temperature which may occur.

The gyroscopic horizon is normally operated on a suction of 3.5 inches of mercury, at which suction the air flow at sea level is about 2 cubic feet per minute measured at the outlet of the instrument. Unless otherwise stated the performance data given below were obtained with the normal suction imposed.

Effect of temperature on rotor speed.- The variation of the rotor speed with temperature at zero altitude is shown in figure 14. The falling off in rotor speed with reduction in temperature appears to be somewhat greater at higher altitude (reference 11).

Accuracy of indication.- In the laboratory the error in indication of pitch and bank is observed at room temperature (+20° C.) when (a) the gyroscopic horizon is subjected for 10 minutes on the scorsby to a combined roll, pitch, and yaw with an amplitude of 1.5° and frequency of 10 per minute, and (b) when it is subjected for 5 minutes to a circular vibration having a frequency of 1,800 c.p.m., and a diameter of 0.003 inch. Under these conditions the error of satisfactory instruments does not exceed 1° in either bank or pitch.

The rate of precession is determined by inclining the caged instrument 30° in bank or pitch, uncaging the rotor unit, and then righting the case to the normal position. The gyroscopic horizon then indicates a bank or pitch of 30°, but under the action of the righting torque the reading starts to change to the proper indication of zero. The time for the reading to change from 30° to 10° in bank or pitch is normally about 140 seconds, with variations from 110 to 160 seconds.

Low-temperature performance.- At a temperature of -20° C. and when operating under normal suction, the precession of the gyroscopic horizon, when subjected for 10 minutes to the standard roll, pitch, and yaw motion of the scorsby, does not exceed 1°. The operation of uncaging the rotor causes no appreciable deviation in indication of either bank or pitch.

Rotor-bearing friction.- Starting friction and running friction are both of importance. They are determined from the practical point of view by the minimum suction necessary to start rotation and the length of time the rotor runs after the normal suction is cut off.

At an instrument temperature of -35° C., it requires from 1.0 to 2.5 inches of mercury, with an average of 1.5 inches of mercury, to start the rotor. At -20° C. the rotor starts turning at suctions under 1.0 inch of mercury. When the instrument is at room temperature, the rotor rotates more than 8 minutes after the suction is cut off.

Effect on magnetic compass.- At a distance of 8 inches from the magnetic compass, the gyroscopic horizon as delivered by the manufacturer causes no appreciable change in the readings of magnetic compasses. In view of the use of steel in the bearings, apparently necessary at the present time, it cannot be assumed that the effect on the magnetic compass will remain negligible under all conditions of use.

AUTOMATIC PILOT

The practice of maintaining straight, level flight of transport airplanes by automatic means is becoming general. The automatic means, commonly called an automatic or gyro pilot, consists in its simplest form of elements which are sensitive to change in yaw, roll, and pitch and which are connected to the airplane controls through suitable relays. In most automatic pilots commercially available, control of these quantities is dependent upon gyroscopes. Efforts to use an unstabilized magnetic compass or unstabilized earth inductor compass for direction control and pendulums for bank and pitch control, have been unsuccessful because of inherent limitations. Ordinary accelerations of the airplane during flight cause extraneous indications of these gravity sensitive devices.

Other automatic controls in addition to yaw, roll, and pitch are being found desirable by pilots. Early in the development of the automatic pilot, altitude control by means of a pressure-sensitive element was added to the pitch control. Turns and glides can be made semiautomatically by operation of controls. The necessary adjustment of trim as the loading of the airplane changes due to fuel consumption, is in process of being made automatic.

A follow-up mechanism is necessary to prevent overcontrol which gives rise to oscillations or "hunting" of the airplane. That is, the control surfaces of the airplane must be set in some manner to correct exactly for departures from the proper course or attitude. This setting may, in theory at least, be made proportional to the magnitude of the departure, the velocity of departure, or the acceleration of departure. The method chosen in any particular design of automatic pilot depends mostly upon the primary controlling elements chosen. In the Sperry pilot, herein described, deflection of the control from the neutral is directly proportional to the magnitude of the departure of the airplane from the set course.

Only the Sperry automatic pilot, which is representative of the gyroscopic-control type, will be described. Descriptions of the Smith (RAE) automatic pilot and the Pollock-Brown Deviator, both utilizing gyroscopes, are given in references 6 and 8.

The Sperry automatic pilot depends upon the direction-

al gyro and the gyroscopic horizon for controlling the course, bank, and pitch of the airplane. Although the automatic pilot forms a single unit, for convenience the directional-control unit and the bank- and pitch-control units are described separately. A diagrammatic drawing of the former is shown in figure 16, and of the latter in figure 17. A view of the instrument dial is shown in figure 18.

Directional unit.- The control gyroscope is essentially the directional gyro previously described. Referring to figure 16, the rotor R is mounted in horizontal gimbal HG which in turn is pivoted in vertical gimbal VG. The case C is thus free to rotate about any axis without disturbing the orientation of the rotor axis. The rotor is air-driven, air entering at A and passing to the rotor through tube T, which is attached to gimbal VG. A suction of about 4 inches of mercury is maintained in the case of the instrument. Compass card C2 for indicating the heading of the aircraft is attached to vertical gimbal VG and is read relative to a lubber line through window W. Means not shown in the figure are provided for caging and setting the gimbals both to level the rotor and to obtain any desired heading indicated on card C2.

Directional control is obtained from the relative positions of the nozzle plate NP and the nozzles N1 and N2. The nozzle plate is attached to the vertical gimbal VG and thus has its position determined by the position of the rotor axis in azimuth. The nozzles are assumed at the moment to be integral with the instrument case. As shown in section AA the nozzle plate just bisects the nozzles. When the airplane turns, the nozzles and case of the instrument also turn, but the nozzle plate holds its orientation. Thus one nozzle is closed and the other opened. As seen in figure 16, the nozzles lead through tubing AL1 and AL2 to the two sides of the diaphragm D1. Air flows in at holes B, and enters the instrument case at the nozzles N1 and N2 when both are open, thus maintaining equal pressure on the two sides of diaphragm D1. When a departure from the course occurs, one nozzle is closed, whereupon the pressure on the side of the diaphragm connected to this nozzle builds up.

The diaphragm, as it deflects under this differential pressure, moves valves P1 and P2 of the oil valve, connecting oil under pressure with one side of the piston of the servo cylinder and permitting the oil from the other side to pass into the oil sump. The resulting movement of

the servo piston operates the rudder controls to correct the course. The rate of oil flow, and consequently the rate of travel of the rudder control, is determined by manual adjustment of valve SC. Extraneous oscillation of the rudder is minimized by proper adjustment of the rate of oil flow. When the rudder is to be manually operated, the valve CV is opened, the oil pressure on the two sides of the servo piston is equalized by opening valve CV. In an emergency the pilot can override the automatic pilot by exerting sufficient force on the rudder bar to open the safety valve S which equalizes the oil pressure in the servo cylinder.

The follow-up device consists of a mechanism by which the nozzles N_1 and N_2 are moved as a unit by the rudder control or servo piston to the symmetrical position with reference to the nozzle plate NP. The cable F turns the arm Q which has a pin projecting into U-bar M. The shaft of the U-bar enters differential D. Gear G_2 on the outlet shaft of the differential meshes with gear G1. The nozzle unit, which is attached to gear G1 is free to turn relative to the instrument case. The position of the nozzle unit is indicated by compass card C1. It will be seen that the mechanism keeps the deflection of the rudder control directly proportional to the departure of the airplane from its proper course. Thus when the airplane departs from the set course, the motion of the rudder bar to counteract the departure is continuously controlled by the follow-up mechanism until the heading is again on course. The operation may be made clearer by noting that a departure from the course is observed on compass card C2, card C1 still indicating the course. As the controls are operated by the servo mechanism, card C1 attached to the nozzles comes to the same reading as card C2, and the two cards then drift together to the on-course position as the controls operate.

The nozzle unit can be set to give any desired heading on card C1 by means of knob K, which operates gear G1 by means of intermediate gears G2 and G3 and the differential D. The adjustment is used to set the nozzles into alinement with the nozzle plate, as indicated by identical readings on the two compass cards.

Turns can be made automatically by a mechanism which has been developed but is not shown on figure 16. In this mechanism a valve controls the air supply to an air motor which turns the nozzle unit in the required direction. This valve must be manually operated to start and stop the turn.

Pitch and bank unit.- The automatic control of pitch and bank is similar in general design to the directional control. The gyroscopic horizon previously described is used as the control unit. The rotor R, shown in top view in figure 17, rotates about a vertical axis and is enclosed in a case G1 which is free to deflect in pitch. Gimbal G2, in which case G1 is mounted, is free to deflect in bank. The nozzles N1 and N2 and nozzle plate NP1 for controlling pitch, are similar in operation to those of the directional unit described above. The nozzle plate NP of the bank-control element is shown; the other parts do not differ essentially from those for the pitch unit.

It will be noted that some complexity arises in connecting the nozzle plate NP1 to the case G1. This is accomplished by a channel-shaped bail BA which passes under the case G1 and is connected thereto by a roller. When the airplane banks, the roller on the case G1 rolls in the channel, and when the airplane pitches the bail deflects with the case G1 and rotates nozzle plate NP1.

The bar F1 attached to the bail and nozzle-plate unit, gives an indication of pitch through the window W. The orientation of the nozzle unit is indicated by arm F2.

Bank is indicated by disk BK1 which is free to rotate with gimbal G2. The orientation of the nozzle unit associated with bank control is indicated by the long bar BK2. Figure 18 and the front view in figure 17 show the dial arrangement.

The case C is kept under vacuum by a vacuum pump, for which the connection is shown.

The details of the follow-up mechanism, the oil valves, and the servo cylinders for each control are essentially as has been described for the directional unit. It should be mentioned that a common oil pump and oil sump serve all three servo cylinders. The three oil valves in present designs are installed as a unit back of the gyroscopes on the instrument panel shown in figure 18.

Means are provided for caging the rotor unit G1 and gimbal G2 and setting them in the normal attitude. Knobs K1 and K2 control, through suitable gearing, the setting of the bank and pitch nozzles, respectively.

Level flight.- To maintain level flight it has been found necessary to add an altitude-control unit to the pitch-control unit. This mechanism, not shown in figure 17, consists of a diaphragm capsule which can be closed off from the atmosphere by a manually operated valve, marked "level" in figure 18. Deflection of this diaphragm capsule, caused by change in altitude, rotates a nozzle plate similar in principle to NP1 (fig. 17), and normally covering two nozzles. When one of the nozzles is uncovered, air flows through and operates an air motor which, through suitable gearing, turns nozzles N1 and N2. When this occurs, diaphragm D3 deflects and the oil valve and servo cylinder operate to correct for altitude departure of the airplane. It is evident that the diaphragm capsule may deflect with change in temperature of the air trapped in the capsule when the level-control valve is closed. The change in altitude of flight due to this cause is about 100 feet per degree centigrade change in temperature at all altitudes up to 30,000 feet. In the latest models this source of error is eliminated by using a unit compensated for temperature.

METHODS OF DRIVING GYROSCOPIC INSTRUMENTS

Gyroscopic instruments at present available are air-driven by means of suction from a source such as a venturi tube or vacuum pump. At present vacuum pumps are coming into increasing use, displacing the venturi tube.

Venturi tubes.- When venturi tubes are used, the three gyroscopic instruments are driven by individual tubes usually mounted on the fuselage in the slipstream of the propeller, this increasing the suction developed. This mounting position has the advantages of an air speed greater than that of the airplane and of somewhat decreased hazard of ice forming in the throat, since the air going through the tube is heated somewhat by the engine.

The double-throated venturi (fig. 19) is used to operate the directional gyro or the gyroscopic horizon. A somewhat smaller venturi with a single throat is used to operate the turn indicator. Data on the performance of venturi tubes are given in reference 13.

The power used at sea level and at a true air speed of 80 miles per hour by each of two venturi tubes of the

type used to operate the directional gyro is 0.33 horsepower and for a tube of the type used to operate turn indicators, 0.08 horsepower, making a total of 0.74 horsepower for an installation of three tubes. The power used increases in direct proportion to the product of the true air speed and the impact pressure. At sea level and at a true air speed of 200 miles per hour the total power used becomes 11.6 horsepower, which reduces to about 6.2 horsepower at an altitude of 20,000 feet. The maximum efficiency of the venturi tube is of the order of 3 percent, and therefore most of the power absorbed is wasted as far as operating the gyroscopic instruments is concerned. Further, the actual efficiency is even less since venturi tubes must be chosen so that the gyroscopic instruments operate at relatively low air speeds and the increased suction and air flow developed at higher air speeds are unneeded.

Vacuum pumps.- Engine-driven vacuum pumps are rapidly replacing venturi tubes. This is due as much perhaps to their freedom from icing as to their much greater efficiency. Early installations gave considerable trouble, mainly due to lubrication difficulties, but the defects have been largely eliminated.

Manifold suction.- Experiments have been conducted by a number of organizations on the use of manifold suction to operate gyroscopic instruments (reference 14). Without modification of the manifold to increase the suction available, the suction produced at full throttle is inadequate to operate the gyroscopic instruments.

Suction regulator.- The practice at present is to maintain a suction of 3.5 inches of mercury across the directional gyro and gyroscopic horizon, and a suction of 2.0 inches of mercury across the turn indicator by means of a suction regulator in the line near the instruments. The regulator contains a spring-controlled spill valve which opens to admit air at a suction of 3.5 inches of mercury and has four ports, one for each of the three gyroscopic instruments proportioned in size so that the proper suction is imposed, and one connecting to the source of vacuum.

Suction regulators now available have a performance such that for an air flow from 4 to 10 cubic feet per minute at sea-level pressure and temperature the suction at the gyroscopic horizon and directional gyro ports varies from 3.5 to 4.0 inches of mercury and at the turn indicator

port, from 2.5 to 3.0 inches of mercury. At low temperature the relief valve may stick unless the valve surfaces are clean and free from a film of lubricant.

Filters.- The air for operating the instruments is drawn from the cockpit or cabin of the airplane. Dust depositing from the air affects the operation and life of gyroscopic instruments. Dust filters are usually provided at the entrance port of each instrument. These are either metal screen or, in the latest models of the horizon and directional gyro, a special grade of filter paper.

Tubing.- Tubing of sufficient bore must be used in connecting the instruments to the suction source in order to avoid excessive pressure drop in the tubing. Convenient methods of computing the pressure drop are given in reference 15.

National Bureau of Standards,
Washington, D. C., June 1938.

REFERENCES

1. Sylvander, R. C., and Rounds, E. W.: Directional Instruments. Part IV - Turn Indicators. T.R. No. 128, N.A.C.A., 1922.

2. Stewart, C. J.: Aircraft Instruments. Chapman & Hall, London, 1930.

3. Equipment Used in Experiments to Solve the Problem of Fog Flying. The Daniel Guggenheim Fund for the Promotion of Aeronautics, 1930.

4. Bassett, Preston R.: Automatic Flight and Blind Landing. The Sperryscope, vol. 7, March 1936, pp. 1-4.

5. Bassett, Preston R.: Development and Principles of the Gyropilot. Instruments, vol. 9, Sept. 1936, p. 251.

6. The Principles and Practice of Automatic Control. The Engineer, vol. 163, 1937, pp. 204, 380, 408, 438, 467.

7. Haus, Fr.: Automatic Stabilization. T.M. No. 802, N.A.C.A., 1936.

8. Meredith, F. W., and Cooke, P. A.: Aeroplane Stability and the Automatic Pilot. Jour. R.A.S., vol. 41, June 1937, pp. 415-436.

9. Reid, H. J. E.: A Study of Airplane Maneuvers with Especial Reference to Angular Velocities. T.R. No. 155, N.A.C.A., 1922.

10. Sontag, Harcourt, and Brombacher, W. G.: Aircraft Power-Plant Instruments. T.R. No. 466, N.A.C.A., 1933.

11. Spilhaus, A. F.: Speed of Air Driven Rotors in Gyroscopic Instruments. Jour. Aero. Sci., vol. I, 1934, p. 45.

12. Schmidt, E.: Das Verhalten des Sperryhorizonts beim stationären Kurvenflug. Luftfahrtforschung, vol. 14, April 20, 1937, pp. 283-292.

13. Sontag, Harcourt, and Johnson, Daniel P.: Performance Characteristics of Venturi Tubes Used in Aircraft for Operating Air-Driven Gyroscopic Instruments. T.N. No. 624, N.A.C.A., 1937.

14. Draper, C. S., and Spilhaus, A. F.: Power Supplies for Suction-Driven Gyroscopic Aircraft Instruments. Trans. A.S.M.E., vol. 56, 1934, p. 289.

15. Wildhack, W. A.: Pressure Drop in Tubing in Aircraft Instrument Installations. T.N. No. 593, N.A.C.A., 1937.

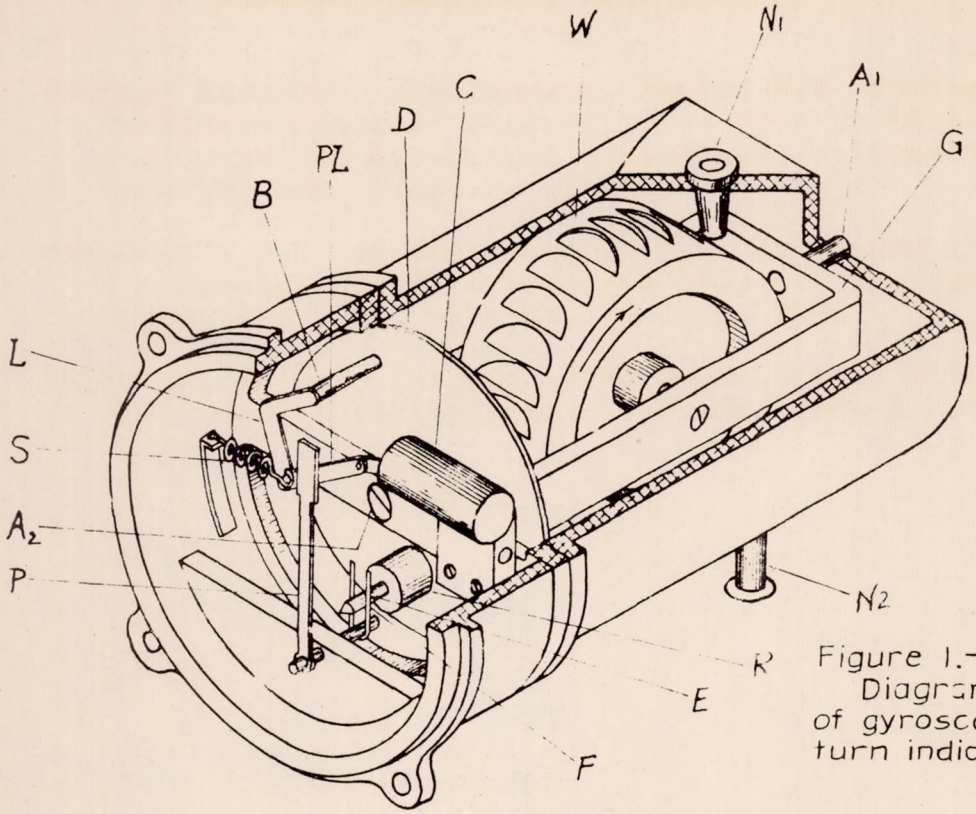

Figure 1.- Diagram of gyroscopic turn indicator.

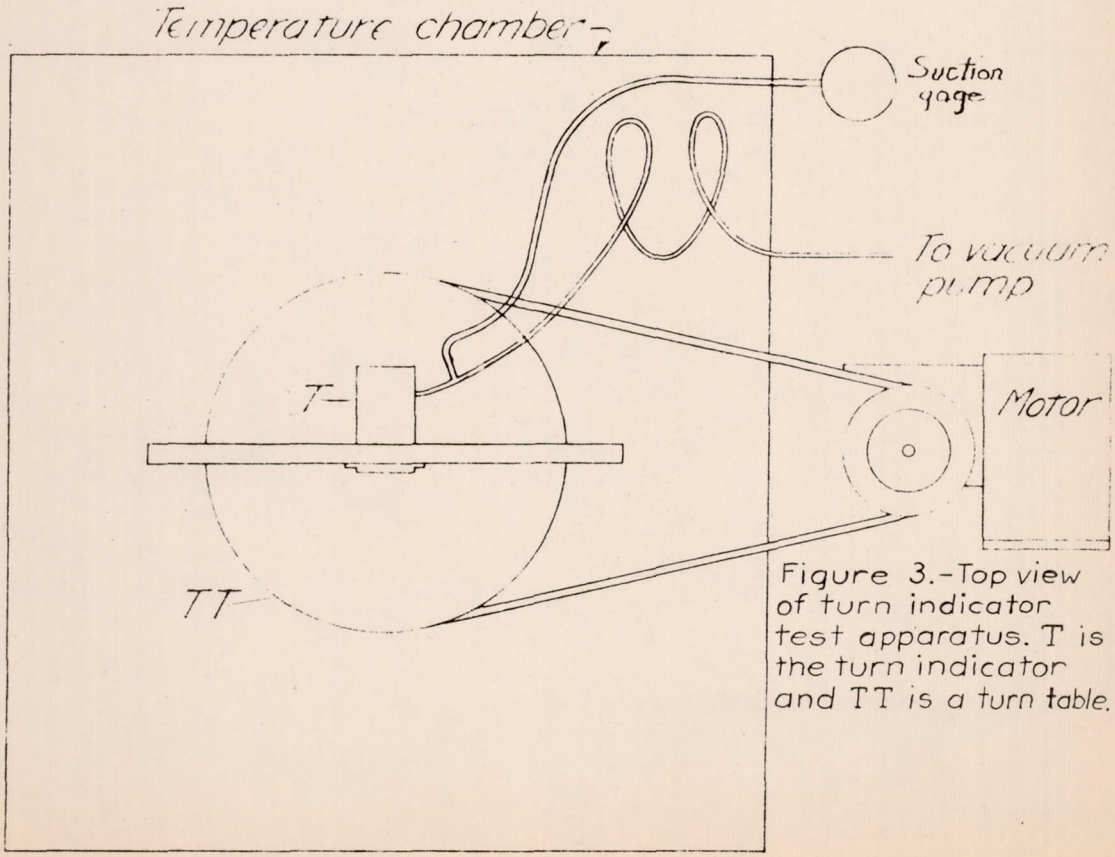

Figure 3.-Top view of turn indicator test apparatus. T is the turn indicator and TT is a turn table.

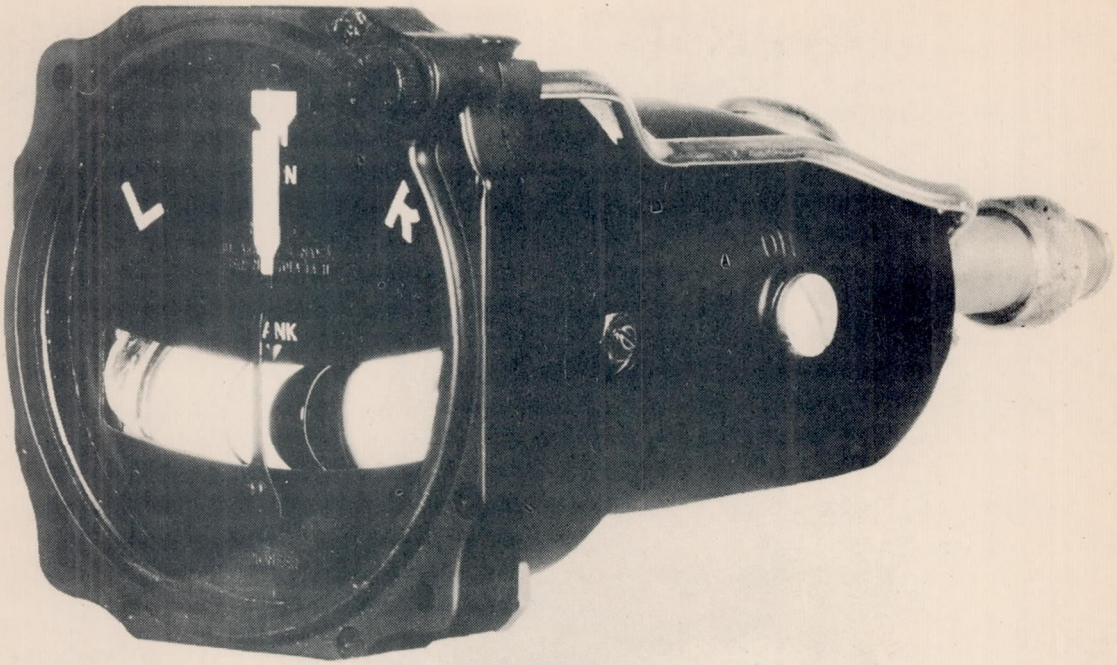

Figure 2.- Photograph of Pioneer turn indicator.

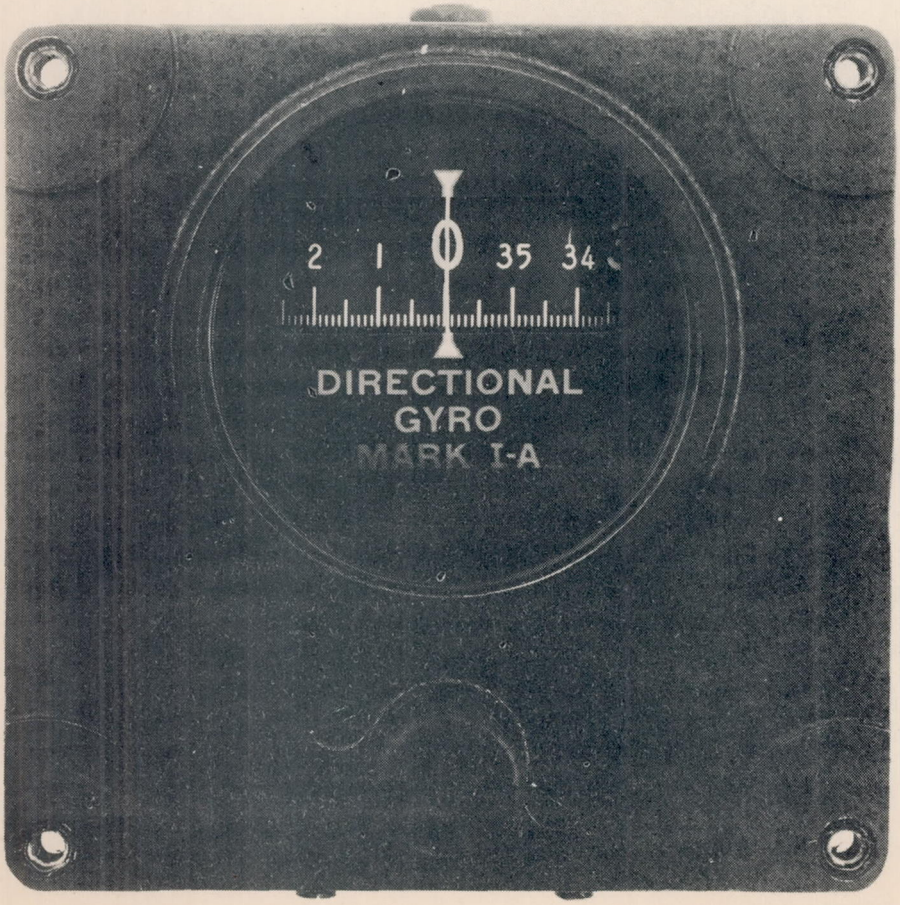

Figure 5.- Photograph of Sperry directional gyro.

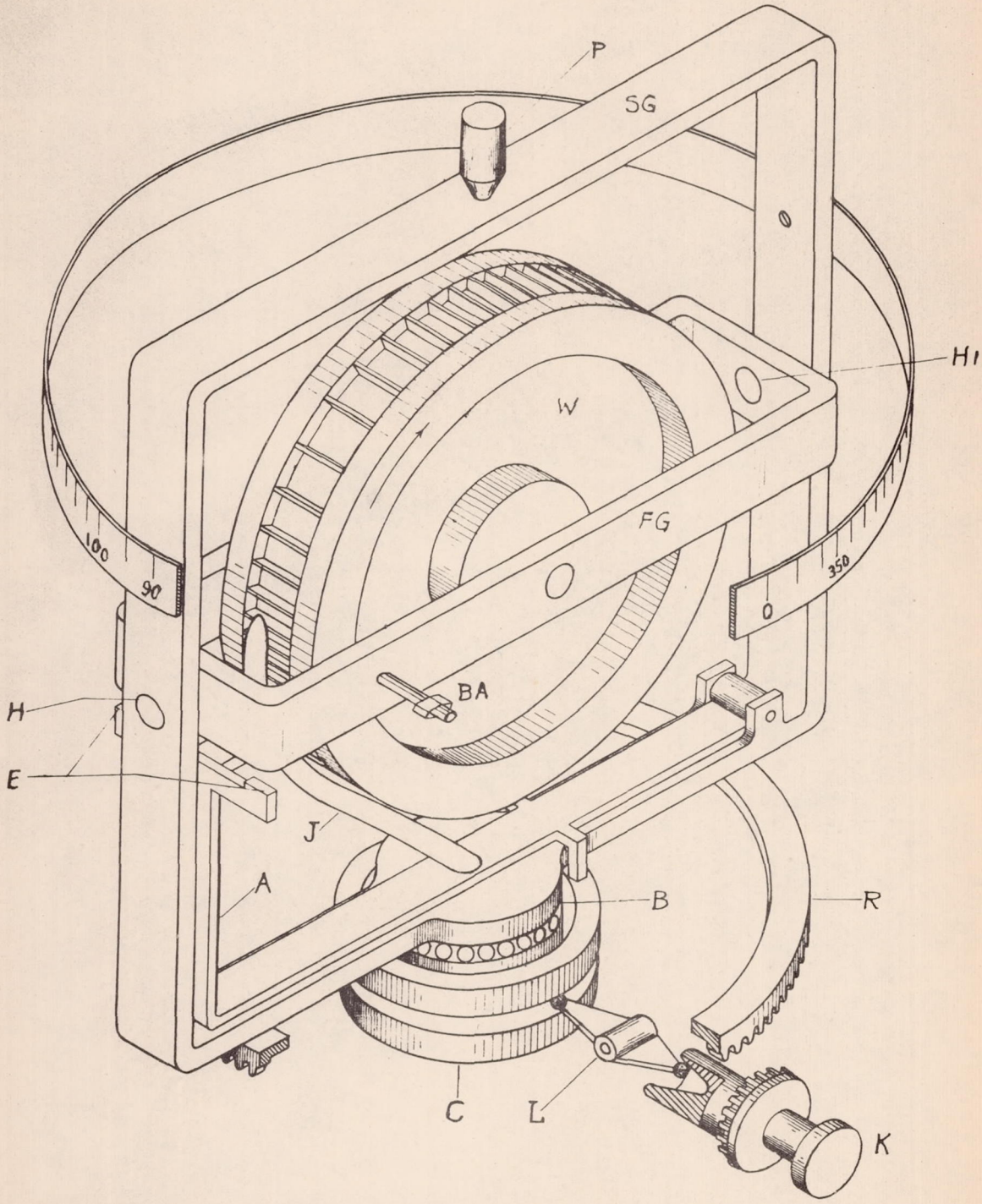

Figure 4.- Diagram of Sperry directional gyro.

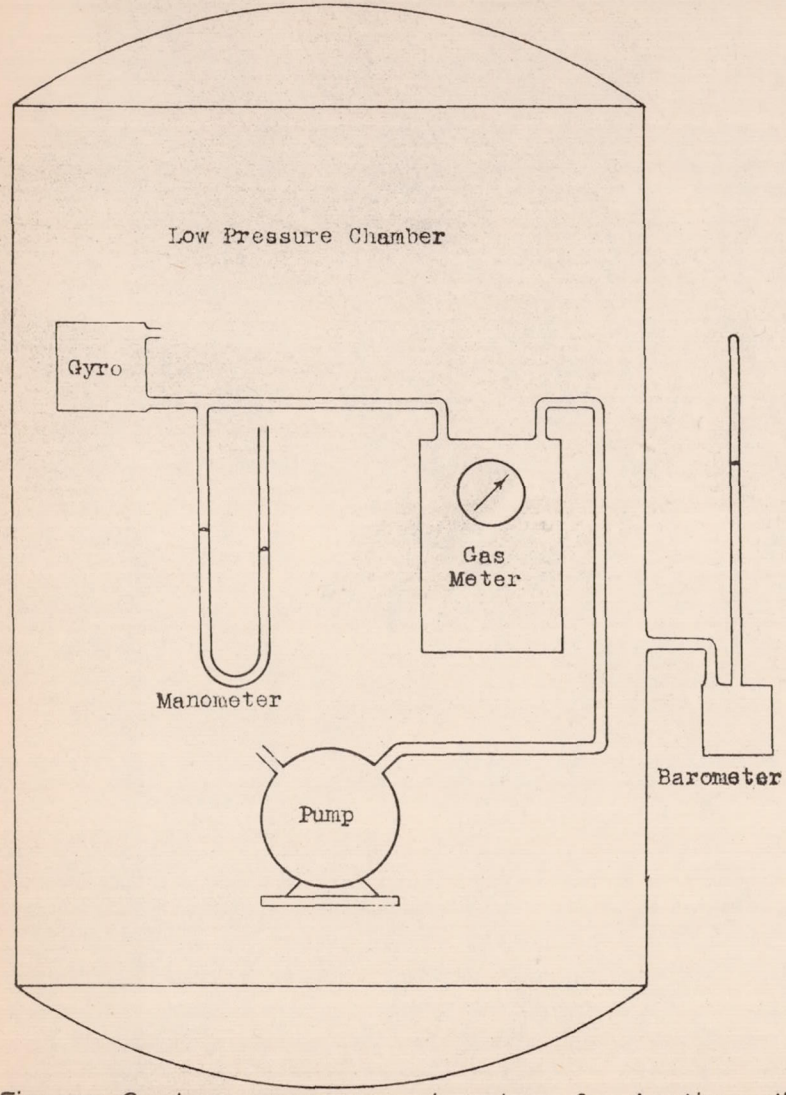

Figure 6.- Low pressure chamber for testing directional gyro and gyroscopic horizon.

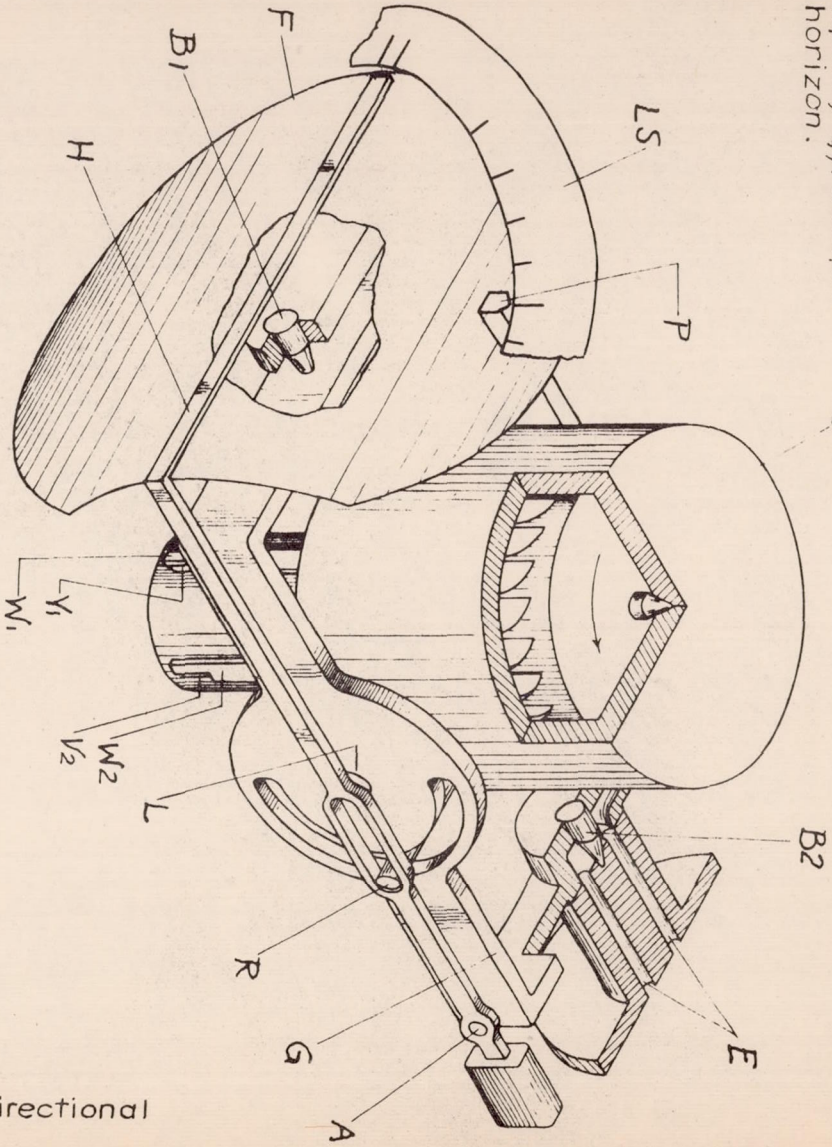

Figure 12.- Diagram of Sperry gyroscopic horizon.

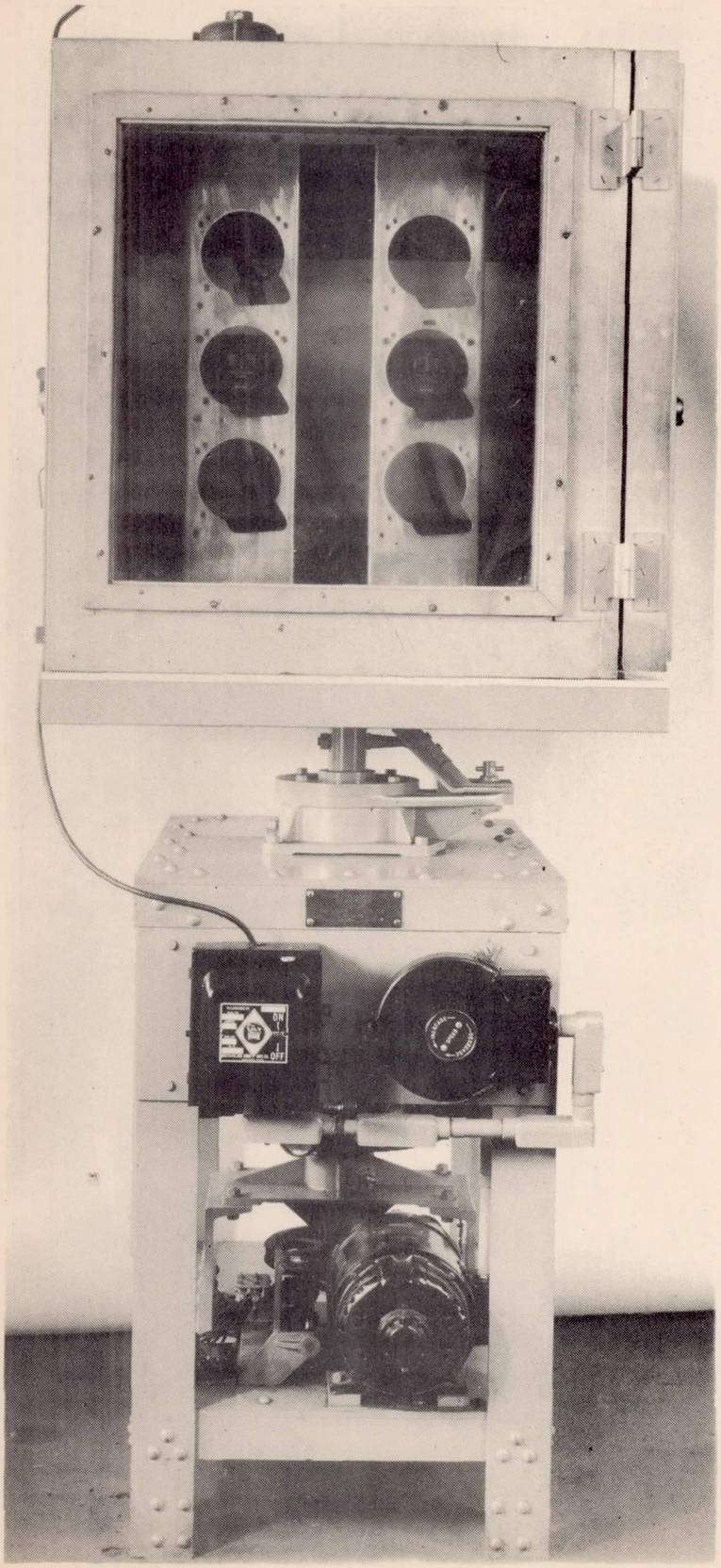

Figure 7.- Sperry scorsby used to subject gyroscopic instruments to a combined pitch-roll-and yaw motion. Two instruments are shown installed, in the temperature chamber which is mounted on the scorsby table.

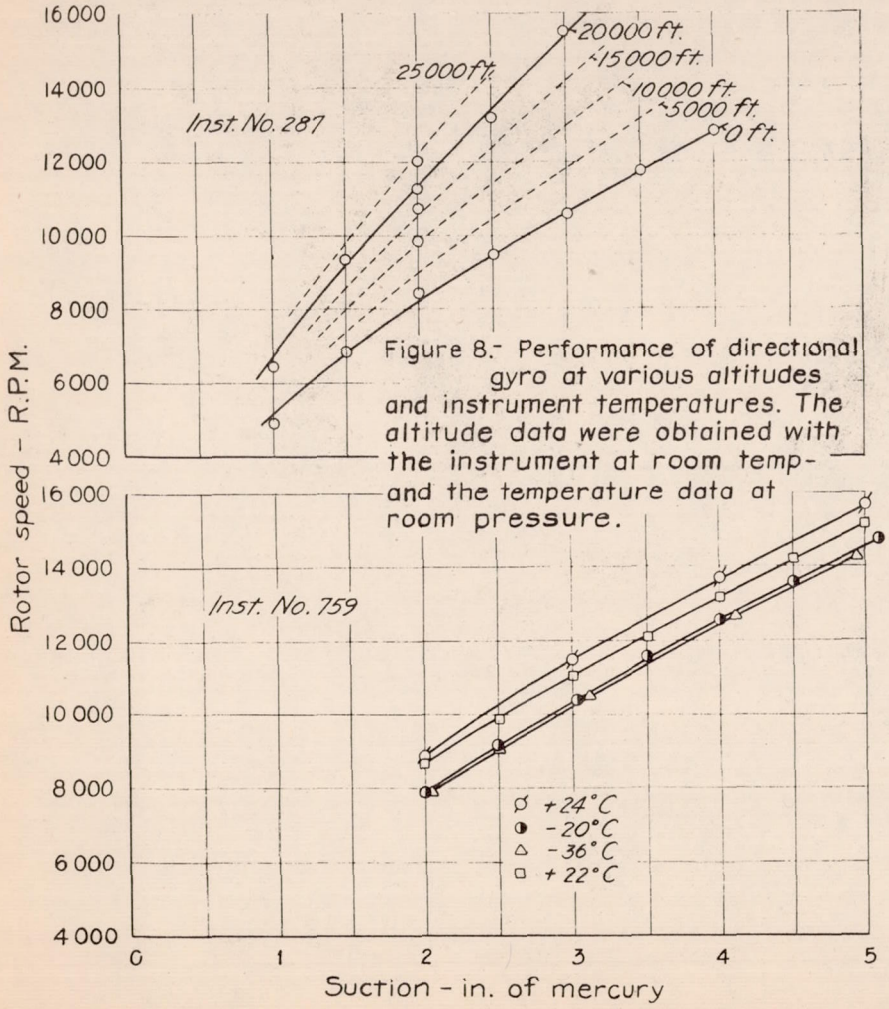

Figure 8.- Performance of directional gyro at various altitudes and instrument temperatures. The altitude data were obtained with the instrument at room temp- and the temperature data at room pressure.

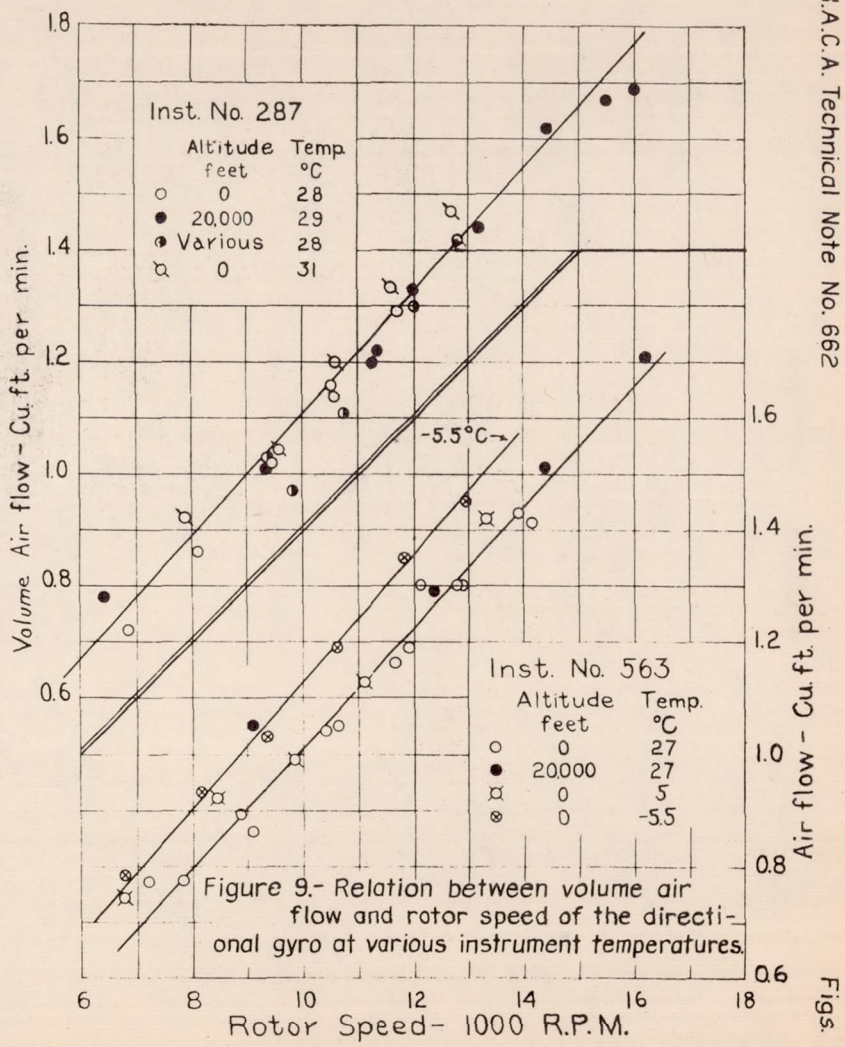

Figure 9.- Relation between volume air flow and rotor speed of the directional gyro at various instrument temperatures.

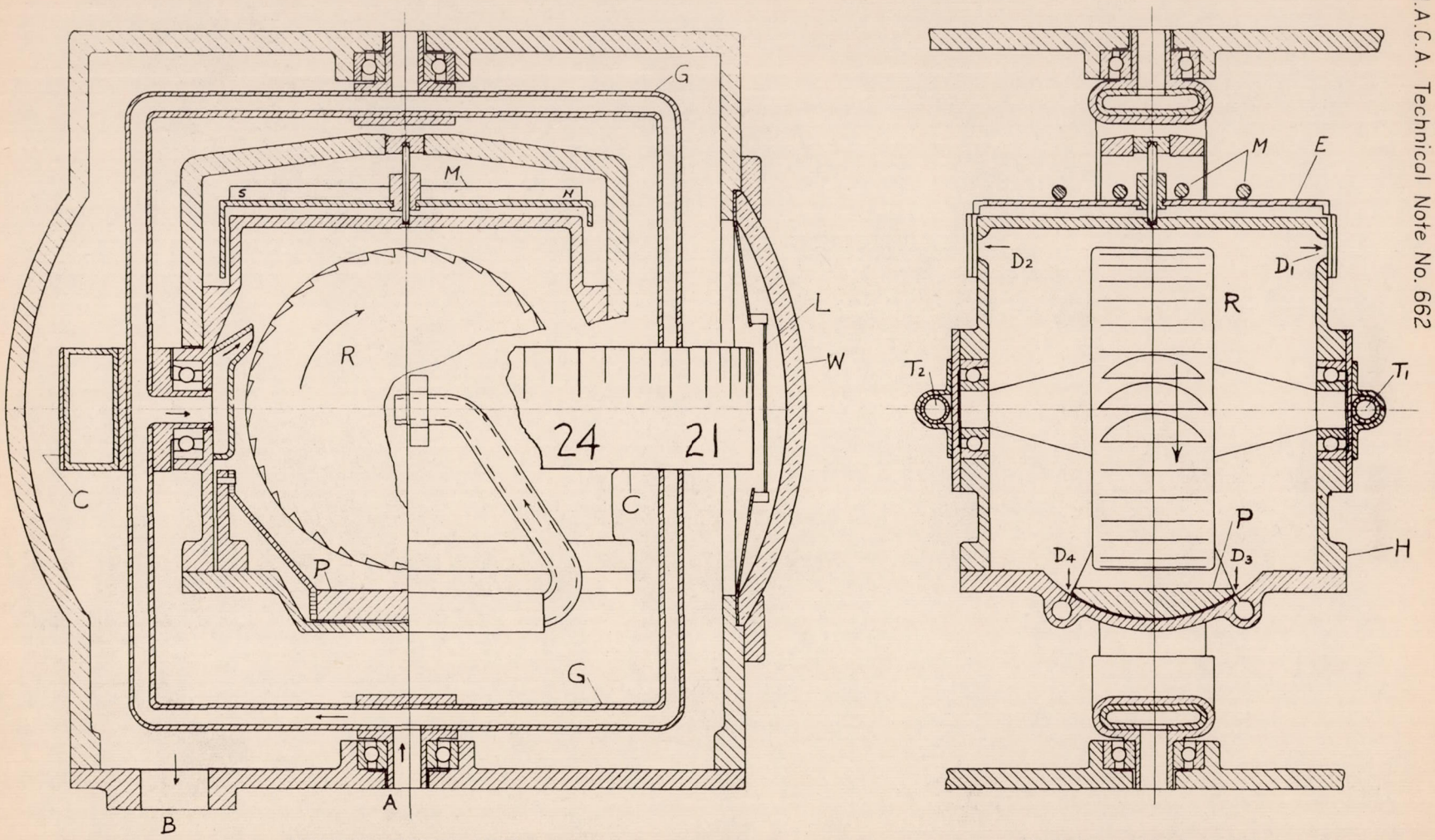

SECTION LOOKING WEST
SOUTH HEADING

SECTION LOOKING SOUTH
ANY HEADING

Figure 10.- Diagram of gyromagnetic compass.

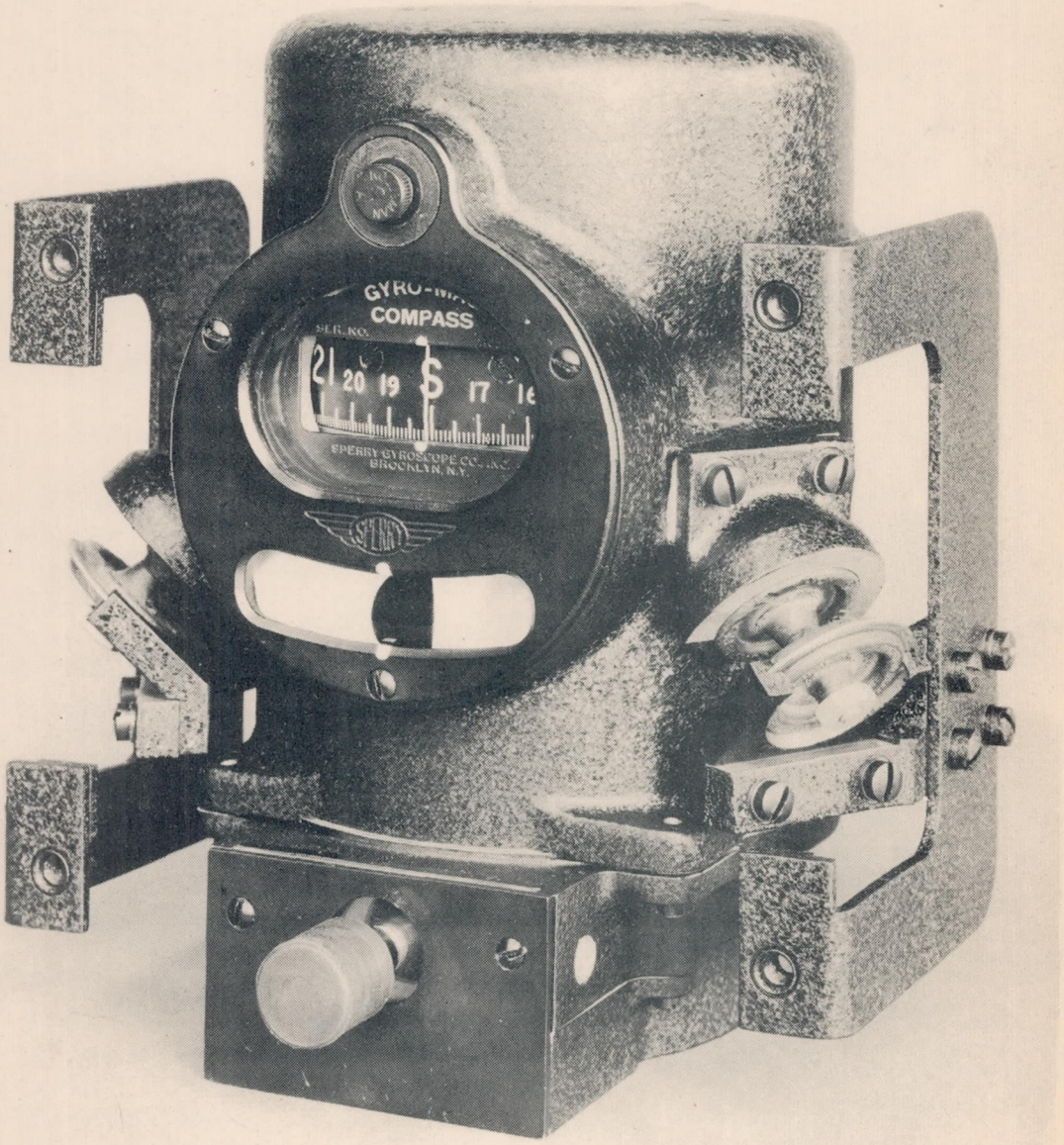

Figure 11.- Photograph of gyromagnetic compass.

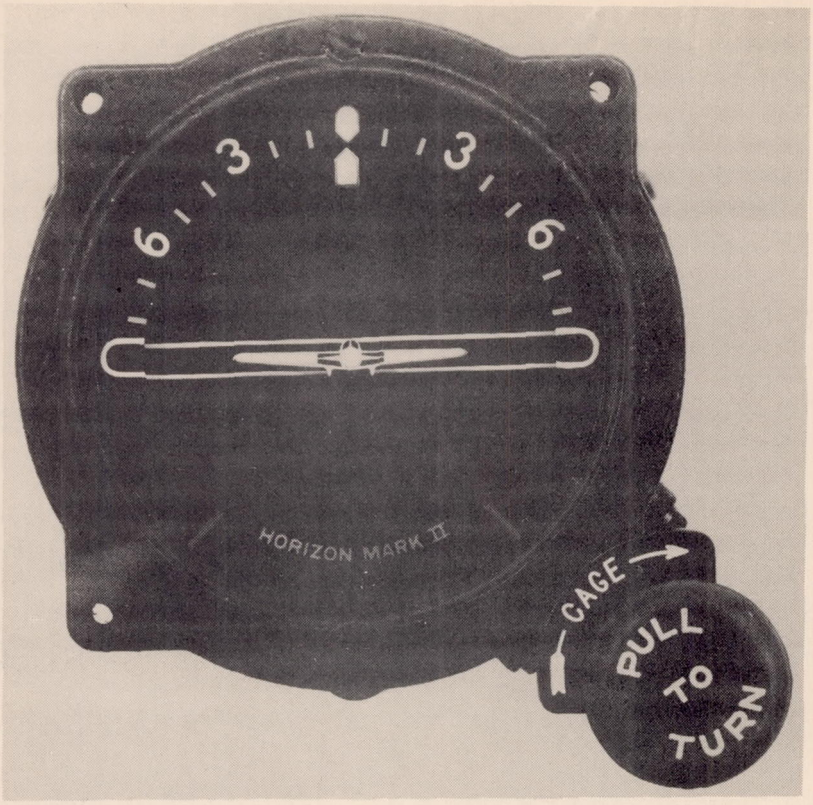

Figure 13 - Photograph of Sperry gyroscopic horizon.

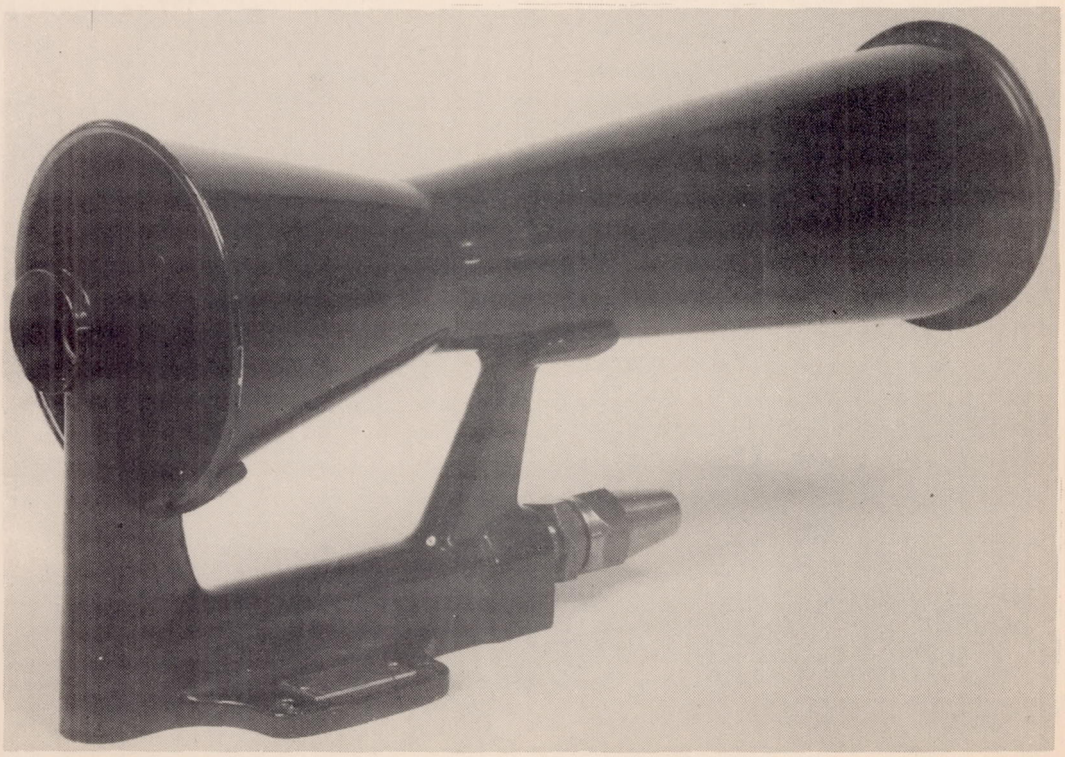

Figure 19.- Photograph of double throat venturi tube of the type used to operate the directional gyro or the gyroscopic horizon.

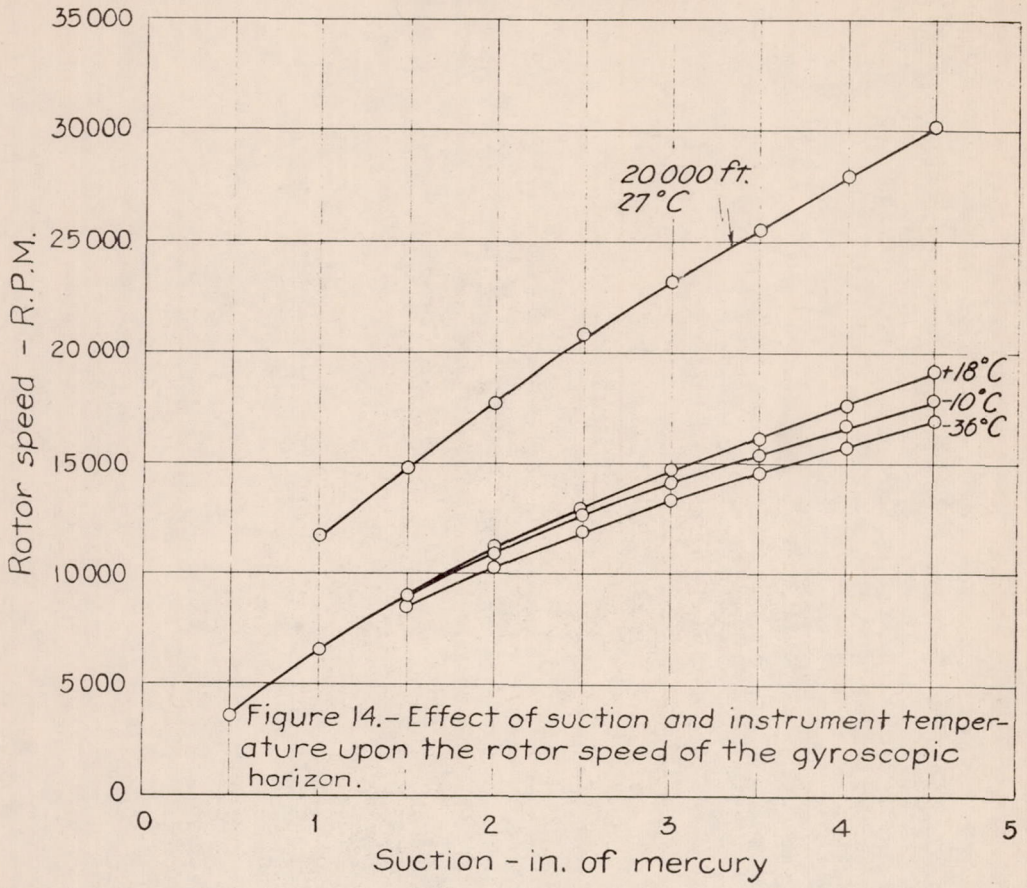

Figure 14.- Effect of suction and instrument temperature upon the rotor speed of the gyroscopic horizon.

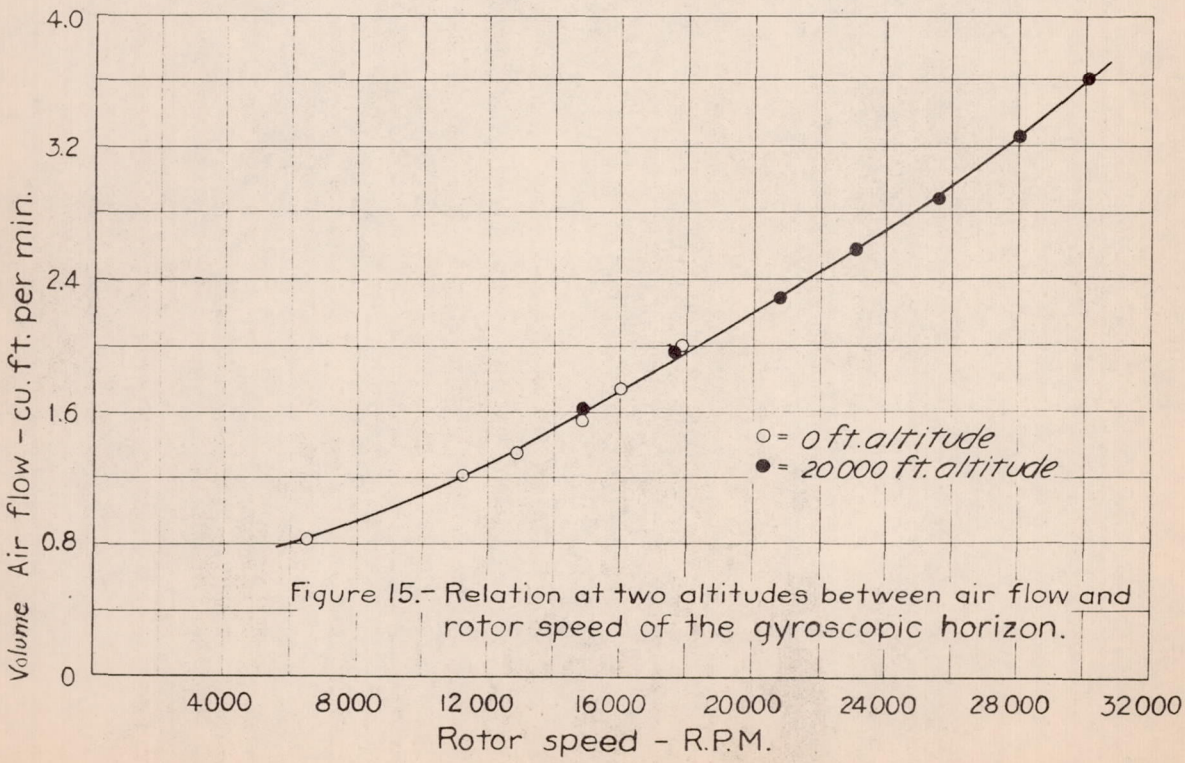

Figure 15.- Relation at two altitudes between air flow and rotor speed of the gyroscopic horizon.

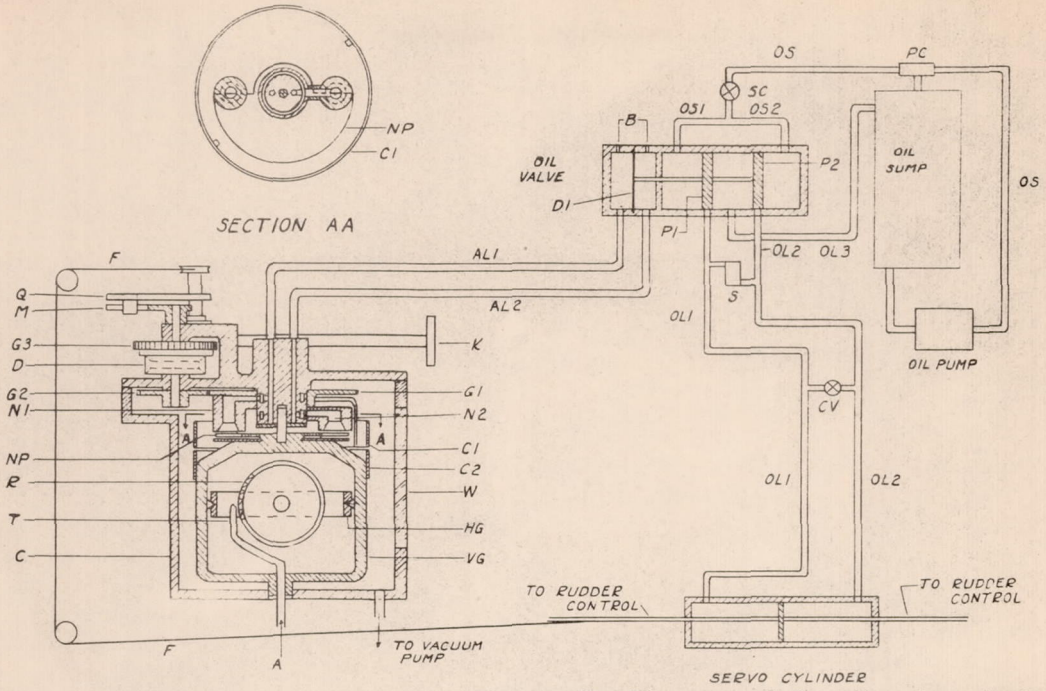

VERTICAL SECTION THROUGH DIRECTIONAL GYRO

Figure 16.- Diagram of directional control of the Sperry automatic pilot.

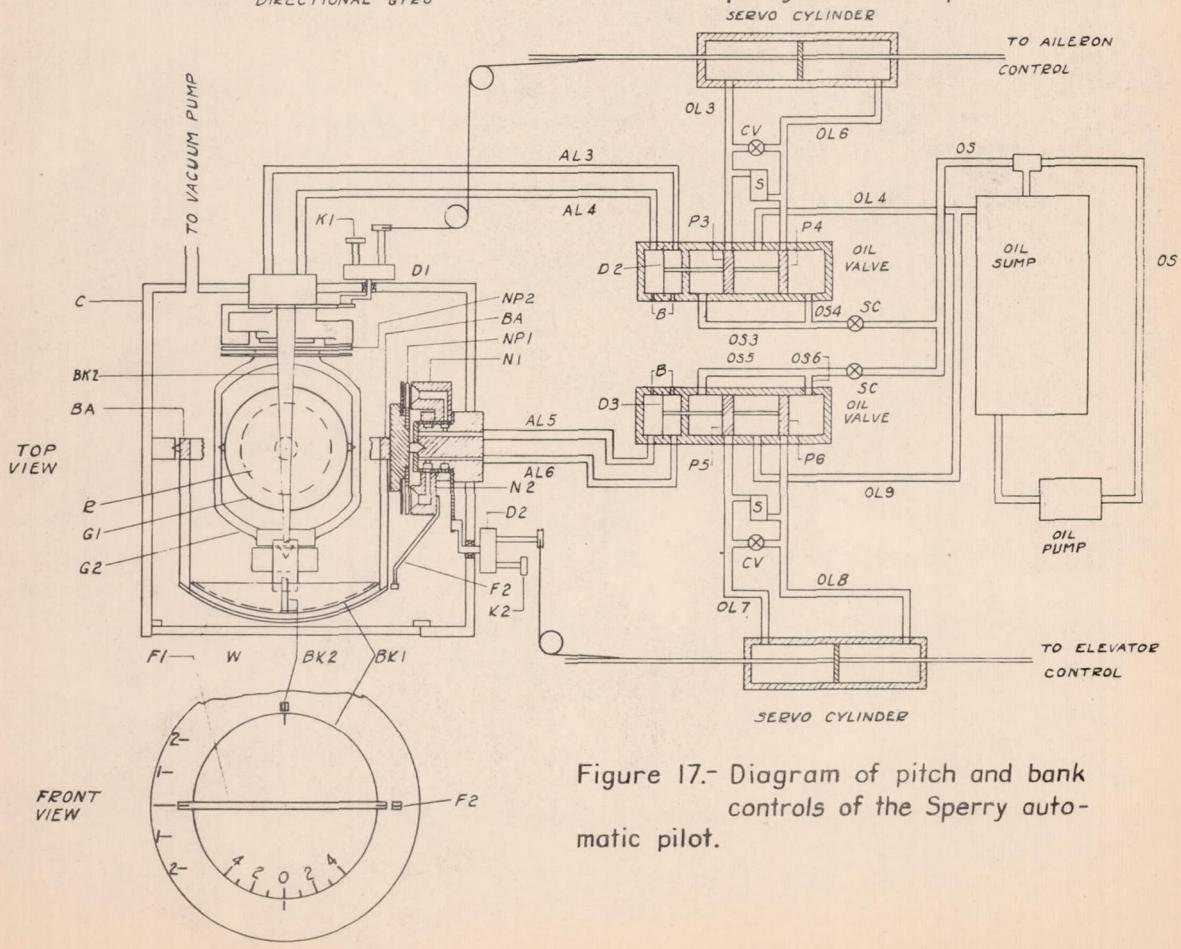

Figure 17.- Diagram of pitch and bank controls of the Sperry automatic pilot.

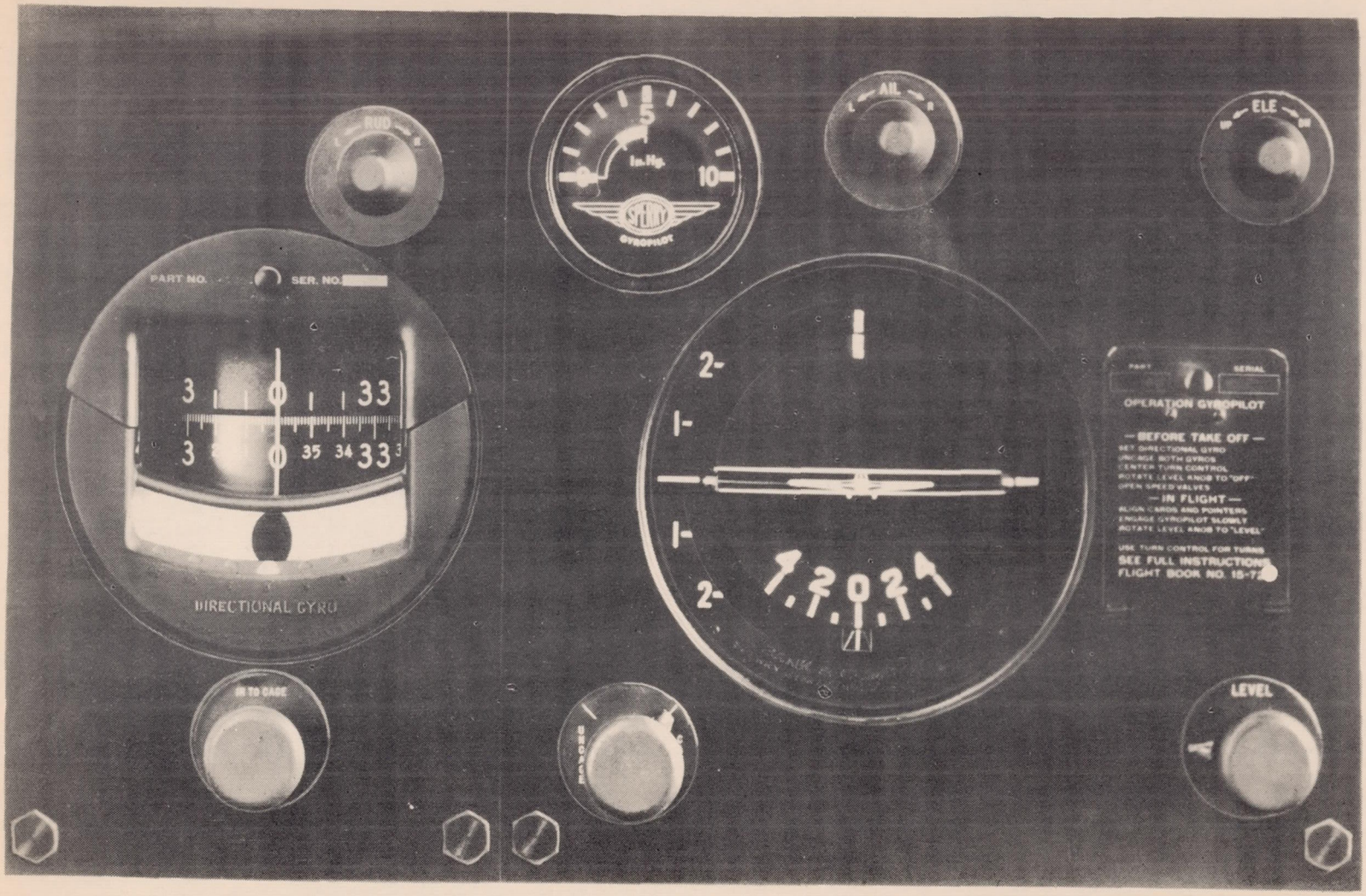

Figure 18.- Photograph of instrument board of Sperry automatic pilot.