View metadata, citation and similar papers at core.ac.uk
brought to you by CORE
provided by NASA Technical Reports Server

N94- 25703

1991-1992 PROJECT SUMMARIES

Virginia Polytechnic Institute and State University
Department of Aerospace Engineering
Blacksburg, Virginia

Professor Antoni K. Jakubowski
Davy A. Haynes, NASA Langley Research Center

PROJECT PARAS: PHASED ARRAY RADIO ASTRONOMY FROM SPACE

Kenneth Nuss, Christopher Hoffmann, Michael Dungan, Michael Madden, Monia Bendakhlia (Ecole Polytechnique Feminine, France)

Abstract

An orbiting radio telescope is proposed which, when operated in a Very Long Baseline Interferometry (VLBI) scheme, would allow higher (than currently available) angular resolution and dynamic range in the maps and the ability to observe rapidly changing astronomical sources. Using passive phased array technology, the proposed design consists of 656 hexagonal modules forming a 150-m diameter antenna dish. Each observatory module is largely autonomous, having its own photovoltaic power supply and low-noise receiver and processor for phase shifting. The signals received by the modules are channeled via fiber optics to the central control computer in the central bus module. After processing and multiplexing, the data are transmitted to telemetry stations on the ground. The truss frame supporting each observatory panel is a novel hybrid structure consisting of a bottom graphite/epoxy tubular triangle and rigidized inflatable Kevlar tubes connecting the top observatory panel and the bottom triangle. Attitude control and station keeping functions will be performed by a system of momentum wheels in the bus and four propulsion modules located at the compass points on the periphery of the observatory dish. Each propulsion module has four monopropellant thrusters and four hydrazine arcjets, the latter supported by either a photovoltaic array or a radioisotope thermoelectric generator. The total mass of the spacecraft is about 20,500 kg.

Introduction

The objective of this project is to design a large orbiting radio telescope capable of resolving astronomical objects in greater detail than possible with ground-based facilities. The telescope would be placed in a geosynchronous orbit and operate in a Very Long Baseline Interferometry (VLBI) scheme observing wavelengths in the centimeters. A high-orbit-based VLBI system offers several obvious advantages over ground-based systems:

(1) Effective aperture of the system can be significantly increased providing three to six-fold improvement in angular resolution or at least an order of magnitude increase in the areal resolution. The ultimate limit may be set by interstellar scintillation.

(2) Due to the telescope's orbital motion, the u-v baseline plane is increased and well-filled, permitting a higher dynamic range in the maps.

(3) The projected baselines change faster than those of ground-based arrays and, therefore, imaging of rapidly changing sources (that vary on time scales of less than a day) would be possible.

(4) With an orbiting antenna, problems associated with atmospheric radiation and/or absorption, and radio noise caused by high-energy particles striking the outer layers of the ionosphere can be controlled or eliminated.

(5) For certain large baselines located outside the Earth's atmosphere, a high degree of phase stability should be achievable.

The following are some of the assumptions and technical requirements established for the PARAS project:

1. The radio telescope will use a phased array antenna. This may greatly simplify structural and construction aspects of the antenna. Aiming the antenna at different radio sources will be done by electronic phasing without maneuvering in space. Also, phasing may possibly compensate for small deformations in the antenna surface.

2. The spacecraft will initially be placed in the geostationary orbit and the observatory surface will always face away from the Earth side with a 0.1^{o} accuracy.

3. The antenna will have a large diameter, between 100 and 150 m, to achieve high sensitivity and a high degree of directivity.

4. The antenna will operate in the VLBI scheme in conjunction with the major ground-based radiotelescopes.

5. The antenna will observe in the centimeter range. Exact wavelengths and electronic design will be selected at a later time. Preliminary selections are 1.35 cm (22 GHz) and 18 cm (1.7 GHz).

6. While the antenna is not required to maintain exactly the same location over the Earth, the antenna position, velocity, and acceleration have to be determined and recorded with errors less than 10 m for position, 1 cm/sec for velocity, and 10^{-5}cm/sec^2 for acceleration. From the radioastronomy data itself, it should be possible to determine the antenna's orbital parameters even more accurately.

7. The radiotelescope components will be launched into low Earth orbit (LEO) by the National Launch System (NLS) having a cargo bay 27-m long and 6.7-m in diameter. In LEO, the collapsed modules will be deployed and the radiotelescope will be robotically assembled. The complete facility will then be transferred to geosynchronous orbit by a low-thrust propulsion system, using either an orbital transfer vehicle or the radiotelescope's own propulsion system.

8. The observatory life will be 10 years.

9. A technology level projected for 2010 may be used in the design process.

Design Overview

To meet objectives of this project we propose a large, 150-m diameter phased array antenna consisting of planar arrangement of 655 hexagonal modules (Fig. 1). Each module contains a 6.7-m hexagonal panel with printed circuitry as the observational dipole array and a fiber optics interconnection system. The correlation receiver located on the back of each panel preprocesses the signals from each panel before they are sent by fiber optics to the central computer in the bus module at the center of the entire antenna. Each module has its own power supply system consisting of gallium arsenide solar arrays on the front and back sides of the panel, a charge/discharge controller, and a sodium-sulphur battery. The truss frame supporting each panel is a hybrid structure consisting of a bottom triangle made of graphite-epoxy tubes and rigidized inflatable Kevlar tubes connecting the top panel and the bottom triangle. The modules are fastened together using connectors located on three corners of the triangular base structure.

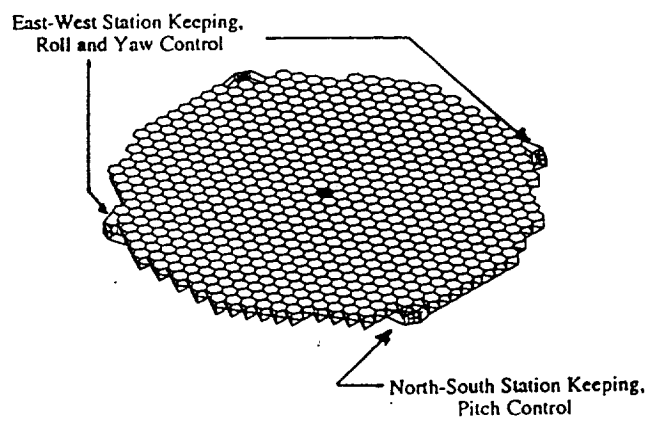

Fig. 1 PARAS configuration

The central bus houses its own power supply system and various subsystems including a central computer for spacecraft operations, data processing, communications, attitude control, and guidance systems. Attitude determination and control will be performed by a system of star trackers, sensors, gyroscopes, and momentum

wheels. Station keeping will be exercised by four clusters of chemical and arcjet thrusters located at compass points on the antenna dish.

Structures

The structure of the spacecraft must be able to support the observatory panels and be stiff enough so as not to deflect more than 3 cm from a reference plane under operating conditions. Also, it should not plastically deform under accelerations caused by thrusters during orbital transfer or orbital corrections. Emphasis has been placed on strength, durability, reliability, self-deployability, and ease of assembly while also trying to minimize the total mass. The observatory is designed to be launched in a cylindrical container 27-m long and 6.7-m in diameter. The launch vehicle is assumed to have a launch capacity of at least 30 metric tons.

Five preliminary structural designs break down into three groups:

1. Self-deployable truss structures: box truss and tetrahedral truss.

2. Self-deployable non-truss structures: Inflatable raft and wrap rib design.

3. Non-self-deployable modular hexagonal truss design.

Both nontruss concepts, inflatable raft and wrap rib design, have been found to have the lowest structural mass, 3000 kg and 2500 kg, respectively; however, consideration of stiffness, reliability, ease of assembly, and launch packing efficiency lead to a conclusion that the modular truss can provide the best solution for the observatory. This is the only design that cannot deploy itself into a complete supporting structure for the observatory. All 656 sections of truss are unfolded out of the launch vehicle in LEO and then are robotically snapped together like building blocks to construct the 150-m diameter structure. The 6.7-m hexagonal observatory panels are used as part of the structure. At three corners of the hexagon are 5.8-m tubes which connect the panel to a triangular truss directly beneath it; the triangular truss is composed of similar tubes. Cross wires between the panel and the triangle add torsional stability to the module. To reduce mass of the modular truss, the initially selected 5.8-m long vertical graphite epoxy tubes have been replaced with rigidized inflatable Kevlar tubes, resulting in a hybrid module design (Figure 2). These tubes will be folded under the observatory panels during launch. Upon removal from the cargo container and exposure to the sun, a chemical within the tube will sublimate and inflate the tube to a desired pressure. After a few hours of curing, the Kevlar becomes rigid and the module can be attached to the truss. The complete configuration is assembled radially in a spiral-like fashion, starting from the central bus. When the modules are joined together to from a complete truss, there are three vertical members arranged in a cluster at each attachment point. This allows the use of the inflatables, since the vertical beams are redundant structural members. If one of the inflatables forms with a dimple or crease, which could make it more susceptible to failure, there are two other members to back it up. Using inflatable vertical members reduces the mass of the modular truss structure to less than the mass estimate for the wrap rib design.

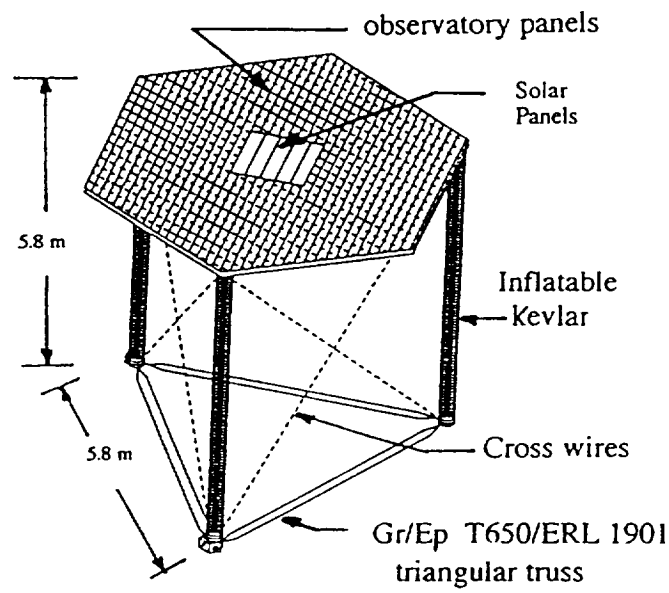

Fig. 2 Observatory module

The triangular base of each module is made of T650-35/ERL 1901 graphite epoxy tubes, 2.5- cm in diameter and 2-mm thick. Anodized aluminum foil coating plus an additional spray of 1 micron of SiO_2 meets the absorptivity, emissivity, and radiation resistance

requirements (Figure 3). The inflatable tubes are 30-cm in diameter and composed of reinforced prepreged Kevlar matrix developed by CIBA-GEIGY for the European Space Agency. A Kapton foil can act as a gas barrier, and a metallic aluminum layer can serve as a thermal control coating for the tube (Figure 3). Cross wires can be made of graphite fibers impregnated with Teflon and coated with SiO_2. The bottom and top joints are made of titanium and serve as caps for the inflatables. Each joint has a male and a female part that can be used to snap the modules together into the truss (Figures 4 and 5). Each observatory panel is made of a structural component and a facesheet used as the base for the antenna circuitry. Several sandwich configurations have been investigated for the design of the observatory panels. They include structural foam core with a polyimide film facesheet, various Nomex honeycomb cores with graphite/epoxy faces, and Kevlar core with Kevlar faces. The final selection (based on mass, strength and thermal properties) resulted in the adoption of a honeycomb structural foam panel (made of Rohacell 311G or its future derivatives) as a structural component and a polyimide film (such as Upilex S) as a facesheet.

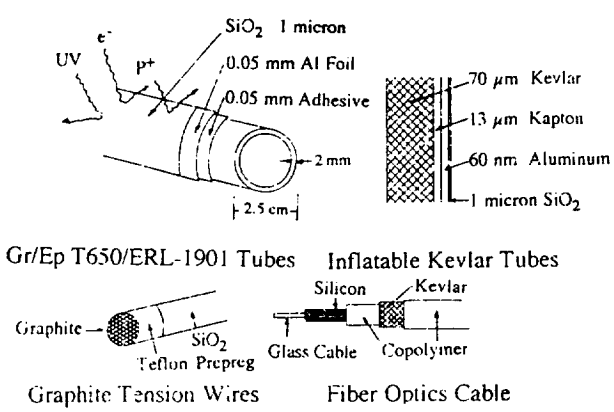

Fig. 3 Selected materials

Structural calculations of the whole configuration included finite element static and dynamic analyses. Because of the complex nature of the truss and the large number of members, a complete and exact model would have required very large computer calculation time. Therefore, to reduce calculation time, it was necessary to simplify the structure and reduce its size, while maintaining sufficient accuracy of the solution. Using node restraints to simulate the presence of additional structure allowed modeling of only a quarter of the antenna dish. The actual elements of the modules were represented using beam, plate, and node fastener elements. Five load cases have been investigated: (1) solar pressure load, (2) thrusters firing in the east-west direction, (3) thrusters firing in the north-south direction, (4) thrusters firing in the vertical (z) direction, and (5) orbital transfer using a thrust of 500 Newtons applied at the bus location. All member loads have been found to be well within the maximum loads. For case one, a non-thrusting case pertaining to astronomical observations, maximum surface deflection at the perimeter was 6 mm, well within the allowable value. During an orbital transfer, the deflection is 1.38 m; however, all the member loads are very low.

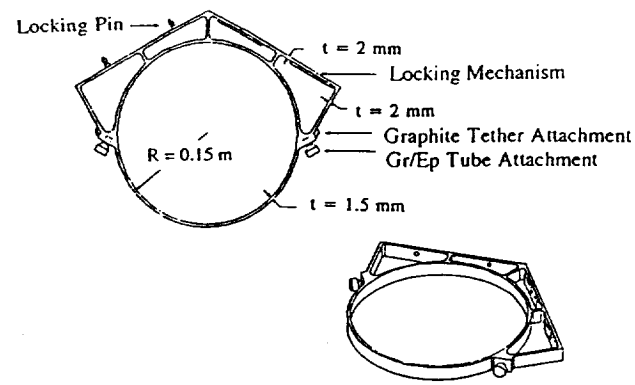

Fig. 4 Bottom connector joints and member attachments

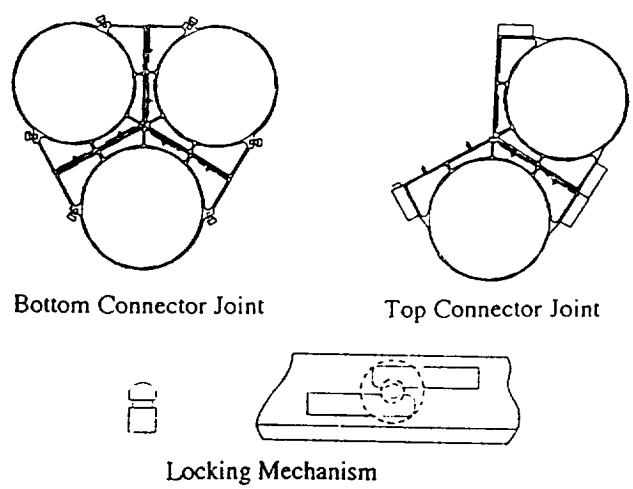

Fig. 5 Connector joints and locking mechanism

Electronics

The phased array receiving antenna will use printed circuitry technology. A pattern of dipoles, patch elements, and circuitry will be etched onto the surface of the polyimide thin sheets. An additional 25 μm of film will cover the circuitry to protect it from radiation damage. The size and pattern of the antenna elements will be determined by electronic and astronomical considerations.

An electronic assembly, including a low-noise receiver and processor unit for phase shifting, will be located on the back side of each observatory panel. The intermediate frequency (IF) data will be channeled via fiber optics to the central control unit in the bus and down-linked directly to telemetry stations on the ground. A clock reference for the PARAS antenna will be based on hydrogen maser oscillators (stable to within 20 temtosec) at the telemetry stations on the ground and will be relayed directly to the PARAS. The IF data will be recorded on magnetic tape on the ground-based telemetry stations and later correlated with the data recorded by the cooperating ground-based radio telescopes at a processing facility in the U.S. or elsewhere.

Each module will have its own autonomous electrical power supply of 80W consisting of photovoltaic solar arrays, a recharging sodium-sulphur battery, and a charge/discharge controller. Two fixed (non-steerable) arrays employing gallium arsenide on germanium (Ga As/Ge) substrate solar cells will be mounted on the front and back side of the panel. The front array, placed at the center of the panel, has an area of $0.64m^2$; the array mounted on the back has an area of $1.43m^2$. An energy storage system using highly efficient sodium-sulphur batteries was selected to level loads and to provide power during eclipse periods and when the solar incidence angle is too high ($>70^o$). Such batteries, currently under development, should have high energy density (around 200 W hr/kg) and allow for over 2500 cycles with an operational depth of discharge of 80%. Each module will be equipped with a battery having 500 W/hr capacity. The excess energy will be radiated directly to space.

Spacecraft Bus

The central bus houses the central computer for spacecraft operations and data processing, the primary attitude control hardware, the communications system, thermal control subsystem, and bus power supply system. The central computer will act as the spacecraft's data and information relay/processor. The signals received from the observatory modules, coherently amplified and frequency translated, will be multiplexed for transmission to a ground station at a faster rate than the signal itself. By using information buffers, only a minimum data can be lost. Telemetry and timing signal information uplinked from the ground station will be fed to the control systems.

The communications system will use techniques similar to those developed for the Tracking and Data Relay Satellite System (TDRSS). Downlink and uplink frequencies will be around 14 GHz and 15 GHz, respectively, and a relatively high data rate, of perhaps 100 M bits/sec, array may be needed. The system will use two 1.8 m parabolic antennas and require about 200 W.

The average power required for the bus system's operation is estimated at 900 W with short peaks reaching 1250 W. This power will be supplied by a Ga As/Ge photovoltaic array/nickel hydrogen battery system. Eight solar arrays, each 1.62 x 1.06 m, will be placed on top of the bus panel, and two solar arrays, 1.9 x 3.34 m each, will be mounted on the back side, angled down 46° from the observing plane. The secondary power storage will contain two 90-cell NiH_2 batteries having a capacity of 60 Ahr. Since the computer and communications system work efficiently at voltages such as 120 V, the solar arrays will be wired to produce a voltage of 124.5 ± 7 volts.

The thermal control system will maintain the bus equipment at operable temperatures. A semi-passive system incorporating thermal control coatings and a multilayer insulation (MLI) blanket surrounding the hexagonal housing inside the bus module may provide 95% of the temperature control. Additional fixed conductance heat pipes and space radiators will provide more accurate temperature control for selected electronics.

The bus design is primarily dictated by placement of the components to be housed inside. A smaller hexagonal cylinder, 2.3-m in diameter and 2-m long, will contain

those components (Figure 6). This housing structure consists of aluminum panels attached to a longeron-stringer frame with three floor panels, one for the power control and batteries, one to mount the momentum wheels, inertial measurement units and related computers, and a bottom panel for the central control computer, data processor, and communications package. An important consideration in designing the bus internal layout is a desire to keep the center of the mass-to-optical-center distance as short as possible in order to minimize the solar radiation pressure torque.

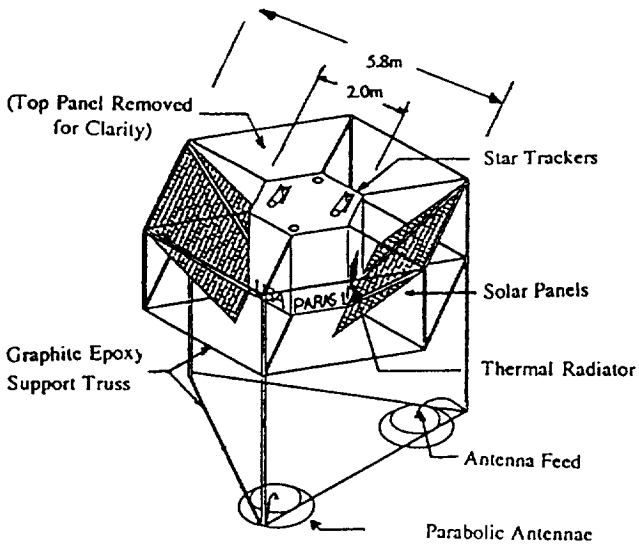

Fig. 6 Spacecraft bus

Station Keeping and Attitude Control

The main sources of orbital perturbations will be solar radiation pressure, gravity gradient torques due to the Moon and Sun, gravitational effects due to varying Earth/Moon/Sun orientation, and the oblateness of the Earth. For a spacecraft such as PARAS that has a large surface area extended in one plane, the primary perturbing force is the solar radiation pressure; indeed, the solar pressure torques (pitch and roll) dominate the dynamic behavior of the spacecraft. For conventional geostationary satellites, the north-west station keeping (NWSK) requirements are significantly larger than those for the east-west station keeping (EWSK). However, for the PARAS, both the EWSK and NWSK maneuvers require very similar ΔV, because the Earth's oblateness and the solar radiation pressure cause the spacecraft to drift east or west of its designed Earth longitude. Numerical calculations have indicated that over the 10 year mission the required ΔV's are:

NSSK -- 483.8 m/s
EWSK -- 427.1 m/s

The ΔV's required for momentum dumping and maneuvering are:

Roll -- 0.126 m/s-year
Pitch -- 0.06 m/s-year
Yaw -- ~ 0.0 m/s-year

Attitude and orbital parameters (position, velocity, and acceleration) will be determined by a system composed of four sun sensors, two fixed-head horizon sensors, two fixed-head star mappers, and two inertial measurement units, as well as ground-based observations transmitted to PARAS over the 14-GHz uplink channel. Information coming from these sources can be combined in the PARAS central control computer, which computes PARAS position, controls momentum wheels, and activates, if necessary, the appropriate thrusters. The data on position and orbital parameters of PARAS are transmitted to the ground station via the 15-GHz downlink.

The primary attitude control will be exercised by four momentum wheels arranged tetrahedrally to offer control on all three axes with a safe degree of redundancy. The assembly can generate torque of 1 Nm and store 700 Nms of angular momentum. The system will maintain a 0.1° accuracy and restrict angular drift rate to 0.01°/sec. Momentum wheels controlling roll will typically need desaturation five or six times weekly. The wheels controlling yaw may need only two or three desaturations over the mission life. The wheels controlling pitch will randomly need desaturation, probably no more than 20 times per year. All momentum dumping operations will be performed by a monopropellant hydrazine thruster system composed of 16 engines in four clusters on the periphery of the spacecraft. The thrusters will act as backup attitude control devices should the momentum wheels fail or unexpectedly shut down because of overspeeding or overheating.

Station keeping maneuvers will be accomplished by hydrazine arcjet thruster system consisting of 16 engines in four clusters. The north-south corrective maneuver (NSSK) will take place every 405 days; over a 52-day period, thrusters will fire for six hours per day (three about apogee and three about perigee). The east-west (EWSK) maneuvers will be done every two weeks; over a 3-day period, thrusters will fire for three hours per day.

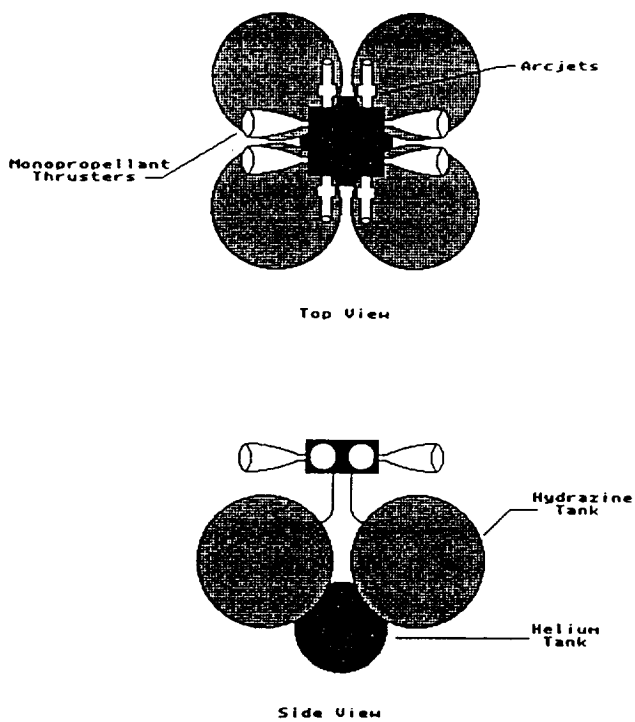

Fig. 7 Thruster cluster

The hybrid propulsion sustem consisting of 16 chemical monopropellant and 16 arcjet engines has been selected on the basis of detailed trade studies comparing chemical, ion, arcjet, and resistojet options. The main considerations were low total mass, reliability, and thruster firing times possibly not exceeding two or three hours per day. The 32 thrusters are divided into four equal size clusters, each including four chemical and four arcjet units (Figure 7). Each cluster rests at a compass point on the PARAS dish and is mounted to a special truss attached to either two or more joints of the adjacent observatory modules. The clusters on the east and west compass points perform the north-south functions and pitch control. The clusters on the north and south points perform the east-west functions as well as roll and yaw control (Figure 8).

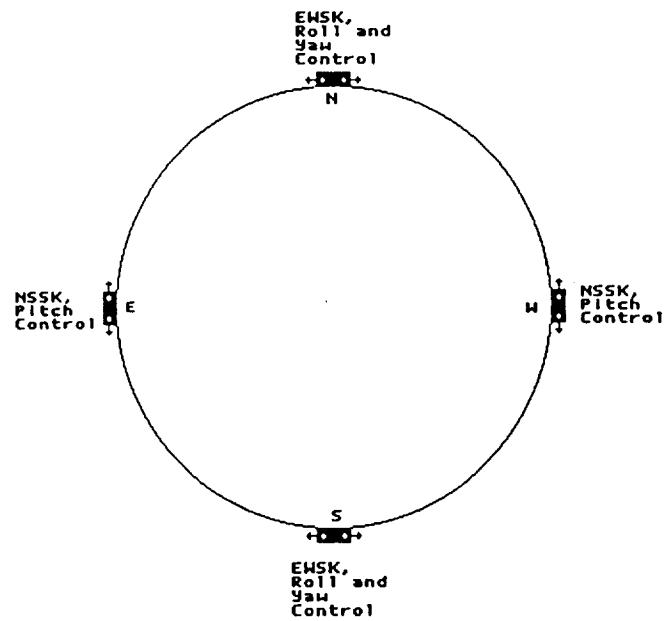

Fig. 8 Thruster assignments

The proposed electrical power station for the arcjet engines consists of the radioisotope thermoelectric generators (RTG) and sodium-sulfur battery storage. Each compass point propulsion cluster has its own power module: the east-west points have one 625-W MOD series generator and 16.4-kW-hr (13.1 kW-hr available) battery. The north-south points have two 625-W MOD RTG's and 28.1-kW-hr (22.5 kW-hr available) battery. The key characteristics of the thrusters are given in Table 1.

Table 1 Thruster characteristics

N_2H_4 thrusters	Arcjet
Thrust 0.05 N	Thrust 0.5 N
Isp 229 sec	Isp 760 sec
Chamber pressure 6.8 atm	Thruster efficiency 40%
Pressurizing gas He	Input power 5 kW
	Power processor efficiency 95%