CORE
Metadata, citation and similar papers at core.ac.uk
Provided by NASA Technical Reports Server

US008951190B2

(12) **United States Patent**
Chmiel et al.

(10) **Patent No.: US 8,951,190 B2**
(45) **Date of Patent: Feb. 10, 2015**

(54) **TRANSFER FUNCTION CONTROL FOR BIOMETRIC MONITORING SYSTEM**

(75) Inventors: **Alan J. Chmiel**, Avon Lake, OH (US); **Bradley T. Humphreys**, Lakewood, OH (US); **Carlos M. Grodinsky**, Hinkley, OH (US)

(73) Assignee: **Zin Technologies, Inc.**, Middleburg Heights, OH (US)

(*) Notice: Subject to any disclaimer, the term of this patent is extended or adjusted under 35 U.S.C. 154(b) by 813 days.

(21) Appl. No.: **11/686,667**

(22) Filed: **Mar. 15, 2007**

(65) **Prior Publication Data**

US 2007/0179734 A1 Aug. 2, 2007

Related U.S. Application Data

(63) Continuation-in-part of application No. 11/236,899, filed on Sep. 28, 2005, now abandoned.

(51) **Int. Cl.**

A61B 5/00	(2006.01)
G01D 1/00	(2006.01)
G06F 15/00	(2006.01)
G06M 11/04	(2006.01)

(52) **U.S. Cl.**

CPC ***A61B 5/00*** (2013.01); ***A61B 5/7225*** (2013.01); *A61B 2560/0443* (2013.01); *A61B 2560/0475* (2013.01)

USPC **600/301**; 702/127

(58) **Field of Classification Search**

CPC H03M 1/00; H03M 2201/4135–2201/4225; A61B 2560/0443; A61B 2560/0475

USPC 600/300; 702/128

See application file for complete search history.

(56) **References Cited**

U.S. PATENT DOCUMENTS

3,972,320	A		8/1976	Kalman
4,301,333	A	*	11/1981	Gillette 704/225
4,353,375	A	*	10/1982	Colburn et al. 600/595
4,356,486	A		10/1982	Mount
4,494,950	A		1/1985	Fischell
4,566,461	A	*	1/1986	Lubell et al. 600/481
4,667,682	A	*	5/1987	Ihlenfeld, III 600/525
4,695,955	A		9/1987	Faisandier

(Continued)

FOREIGN PATENT DOCUMENTS

WO	WO 94/24929 A1	11/1994

OTHER PUBLICATIONS

"Register" definition, see "Ask a Scientist" dated back to Apr. 20, 2001 (pdf document is attached) http://web.archive.org/web/20010420191056/http://www.newton.dep.anl.gov/askasci/comp99/CS036.htm.*

(Continued)

Primary Examiner — William Thomson
Assistant Examiner — Shirley Jian
(74) *Attorney, Agent, or Firm* — Tarolli, Sundheim, Coveil & Tummino LLP

(57) **ABSTRACT**

A modular apparatus for acquiring biometric data may include circuitry operative to receive an input signal indicative of a biometric condition, the circuitry being configured to process the input signal according to a transfer function thereof and to provide a corresponding processed input signal. A controller is configured to provide at least one control signal to the circuitry to programmatically modify the transfer function of the modular system to facilitate acquisition of the biometric data.

17 Claims, 8 Drawing Sheets

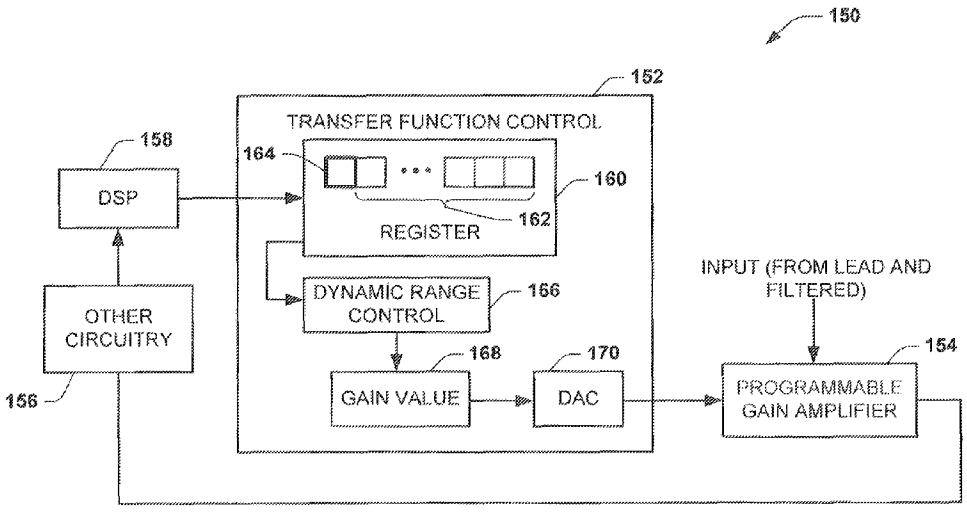

(56) **References Cited**

U.S. PATENT DOCUMENTS

4,803,625	A	*	2/1989	Fu et al.	600/483
4,889,131	A		12/1989	Salem et al.	
4,934,372	A		6/1990	Corenman et al.	
4,938,228	A	*	7/1990	Righter et al.	600/503
4,958,645	A	*	9/1990	Cadell et al.	600/484
5,014,698	A		5/1991	Cohen	
5,024,225	A	*	6/1991	Fang	600/301
5,050,612	A		9/1991	Matsumura	
5,157,392	A	*	10/1992	Zimmer	340/853.9
5,300,093	A	*	4/1994	Koestner et al.	607/32
5,305,761	A	*	4/1994	Byrne et al.	600/510
5,307,263	A		4/1994	Brown	
5,329,281	A	*	7/1994	Baumgartner et al.	341/139
5,365,066	A	*	11/1994	Krueger et al.	250/341.2
5,381,351	A	*	1/1995	Kwong et al.	702/88
5,417,222	A		5/1995	Dempsey et al.	
5,430,843	A	*	7/1995	Sato et al.	709/225
5,458,123	A	*	10/1995	Unger	600/509
5,522,396	A		6/1996	Langer et al.	
5,570,297	A	*	10/1996	Brzezinski et al.	358/1.13
5,601,435	A		2/1997	Quy	
5,640,953	A		6/1997	Bishop et al.	
5,701,894	A	*	12/1997	Cherry et al.	600/300
5,718,234	A	*	2/1998	Warden et al.	600/300
5,720,771	A		2/1998	Snell	
5,738,104	A	*	4/1998	Lo et al.	600/521
5,759,199	A		6/1998	Snell et al.	
5,787,187	A		7/1998	Bouchard et al.	
5,831,673	A	*	11/1998	Przyborski et al.	348/239
5,832,448	A		11/1998	Brown	
5,873,369	A		2/1999	Laniado et al.	
5,876,350	A	*	3/1999	Lo et al.	600/519
5,891,042	A	*	4/1999	Sham et al.	600/483
5,899,855	A		5/1999	Brown	
5,917,414	A		6/1999	Oppelt et al.	
5,944,659	A		8/1999	Flach et al.	
5,957,854	A		9/1999	Besson et al.	
5,959,529	A		9/1999	Kail, IV	
5,976,083	A	*	11/1999	Richardson et al.	600/300
6,018,677	A	*	1/2000	Vidrine et al.	600/520
6,115,629	A	*	9/2000	Richter	600/520
6,117,077	A		9/2000	Del Mar et al.	
6,128,520	A	*	10/2000	Minoz	600/361
6,135,951	A	*	10/2000	Richardson et al.	600/300
6,161,095	A		12/2000	Brown	
6,198,394	B1		3/2001	Jacobsen et al.	
6,238,338	B1		5/2001	DeLuca et al.	
6,246,992	B1		6/2001	Brown	
6,307,867	B1	*	10/2001	Roobol et al.	370/470
6,334,073	B1		12/2001	Levine	
6,366,871	B1	*	4/2002	Geva	702/188
6,381,577	B1		4/2002	Brown	
6,401,085	B1	*	6/2002	Gershman et al.	707/4
6,430,436	B1	*	8/2002	Richter	600/520
6,443,891	B1		9/2002	Grevious	
6,454,708	B1	*	9/2002	Ferguson et al.	600/300
6,477,424	B1		11/2002	Thompson et al.	
6,516,289	B2		2/2003	David	
6,522,928	B2		2/2003	Whitehurst et al.	
6,540,672	B1		4/2003	Simonsen et al.	
6,549,756	B1	*	4/2003	Engstrom	455/66.1
6,551,252	B2	*	4/2003	Sackner et al.	600/536
6,572,542	B1		6/2003	Houben et al.	
6,574,509	B1		6/2003	Kraus et al.	
6,587,840	B1	*	7/2003	Smith et al.	705/35
6,599,241	B1		7/2003	Murphy	
6,606,993	B1		8/2003	Wiesmann	
6,612,984	B1		9/2003	Kerr, II	
6,616,613	B1		9/2003	Goodman	
6,635,016	B2		10/2003	Finkelshteins	
6,641,533	B2	*	11/2003	Causey et al.	600/300
6,647,298	B2		11/2003	Abrahamson et al.	
6,689,117	B2		2/2004	Sweeney et al.	
6,712,762	B1		3/2004	Lichter et al.	
6,738,671	B2		5/2004	Christophersom et al.	
6,748,250	B1		6/2004	Berman et al.	
6,768,920	B2		7/2004	Lange et al.	
6,773,396	B2		8/2004	Flach et al.	
6,779,066	B2		8/2004	Sakamoto	
6,780,156	B2	*	8/2004	Haueter et al.	600/459
6,786,873	B2		9/2004	Zoth et al.	
6,790,178	B1		9/2004	Mault et al.	
6,837,118	B2	*	1/2005	Bonne et al.	73/863.12
6,847,892	B2	*	1/2005	Zhou et al.	701/213
6,850,788	B2		2/2005	Al-Ali	
6,856,832	B1		2/2005	Matsumura et al.	
6,889,165	B2	*	5/2005	Lind et al.	702/183
6,904,408	B1	*	6/2005	McCarthy et al.	705/2
6,936,029	B2	*	8/2005	Mann et al.	604/131
6,985,078	B2		1/2006	Suzuki et al.	
7,003,228	B2	*	2/2006	Wang et al.	398/85
7,034,677	B2	*	4/2006	Steinthal et al.	340/539.12
7,215,991	B2	*	5/2007	Besson et al.	600/509
7,292,169	B2	*	11/2007	Mori et al.	341/139
7,294,105	B1	*	11/2007	Islam	600/300
7,352,310	B2	*	4/2008	Mori et al.	341/139
7,363,398	B2	*	4/2008	Scott	710/52
7,382,296	B2	*	6/2008	Delanghe et al.	341/118
2001/0039373	A1		11/2001	Cunningham et al.	
2001/0056225	A1		12/2001	DeVito	
2002/0002334	A1	*	1/2002	Okuno et al.	600/443
2002/0013518	A1		1/2002	West et al.	
2002/0049371	A1		4/2002	Lai et al.	
2002/0082665	A1		6/2002	Haller et al.	
2002/0128804	A1	*	9/2002	Geva	702/188
2003/0004403	A1	*	1/2003	Drinan et al.	600/301
2003/0065536	A1	*	4/2003	Hansen et al.	705/2
2003/0088160	A1		5/2003	Halleck et al.	
2003/0122677	A1		7/2003	Kail, IV	
2003/0144711	A1		7/2003	Pless et al.	
2003/0171789	A1		9/2003	Malek et al.	
2003/0212441	A1		11/2003	Starkweather et al.	
2004/0002634	A1		1/2004	Nihtila	
2004/0015551	A1	*	1/2004	Thornton	709/204
2004/0030226	A1		2/2004	Quy	
2004/0049246	A1		3/2004	Almendinger et al.	
2004/0059396	A1		3/2004	Reinke et al.	
2004/0078219	A1	*	4/2004	Kaylor et al.	705/2
2004/0080526	A1	*	4/2004	Thornton	345/721
2004/0082840	A1	*	4/2004	Chen	600/300
2004/0083302	A1	*	4/2004	Thornton	709/231
2004/0087865	A1	*	5/2004	Kelly	600/508
2004/0093239	A1		5/2004	Ott et al.	
2004/0107766	A1	*	6/2004	Bonne et al.	73/25.05
2004/0116908	A1		6/2004	Birkenbach et al.	
2004/0147980	A1		7/2004	Bardy	
2004/0148199	A1		7/2004	Dixon, Jr.	
2004/0162466	A1		8/2004	Quy	
2004/0186388	A1	*	9/2004	Gerasimov	600/519
2004/0199056	A1		10/2004	Husemann et al.	
2004/0218789	A1		11/2004	Polcha et al.	
2004/0225203	A1		11/2004	Jemison et al.	
2004/0236189	A1		11/2004	Hawthorne et al.	
2005/0008070	A1	*	1/2005	Wang et al.	375/232
2005/0021370	A1		1/2005	Riff et al.	
2005/0043767	A1		2/2005	Belaclcazar	
2005/0101841	A9	*	5/2005	Kaylor et al.	600/300
2005/0101875	A1		5/2005	Semler et al.	
2005/0113703	A1		5/2005	Farringdon et al.	
2005/0119581	A1		6/2005	Matsumura et al.	
2005/0119833	A1	*	6/2005	Nanikashvili	702/19
2005/0165323	A1		7/2005	Montgomery et al.	
2005/0171410	A1		8/2005	Hjelt et al.	
2005/0171444	A1		8/2005	Ono et al.	
2005/0182306	A1		8/2005	Sloan	
2005/0192488	A1		9/2005	Bryenton et al.	
2005/0203349	A1	*	9/2005	Nanikashvili	600/300
2005/0206518	A1		9/2005	Welch et al.	
2005/0228234	A1		10/2005	Yang	
2005/0228245	A1		10/2005	Quy	
2005/0228301	A1		10/2005	Banet et al.	
2005/0234313	A1		10/2005	Rowlandson et al.	
2005/0245992	A1		11/2005	Persen et al.	
2005/0245995	A1		11/2005	Diebold	

(56) **References Cited**

U.S. PATENT DOCUMENTS

2005/0249037	A1	11/2005	Kohn et al.	
2005/0250996	A1	11/2005	Shirai et al.	
2005/0251218	A1	11/2005	Markowitz et al.	
2005/0272984	A1	12/2005	Huiku	
2005/0273509	A1	12/2005	Brown	
2005/0277844	A1	12/2005	Strother et al.	
2005/0288563	A1	12/2005	Feliss et al.	
2006/0004266	A1	1/2006	Shirai et al.	
2006/0010090	A1	1/2006	Brockway et al.	
2006/0020178	A1	1/2006	Sotos et al.	
2006/0020301	A1	1/2006	Hanson et al.	
2006/0025663	A1	2/2006	Talbot et al.	
2006/0030759	A1	2/2006	Weiner et al.	
2006/0030760	A1	2/2006	Geiger	
2006/0030891	A1	2/2006	Saltzstein et al.	
2006/0031102	A1	2/2006	Teller et al.	
2006/0031378	A1	2/2006	Vallapureddy et al.	
2006/0078171	A1	4/2006	Govindaraju et al.	
2006/0204047	A1	9/2006	Dave et al.	
2007/0055120	A1*	3/2007	Juan	600/392
2007/0055166	A1*	3/2007	Patil	600/509
2007/0109170	A1*	5/2007	Mori et al.	341/155
2007/0229333	A1*	10/2007	Mori et al.	341/139

OTHER PUBLICATIONS

International Search Report Appl. No. PCT/US06/36674, Date mailed: Aug. 3, 2007.

Written Opinion of the International Search Authority, Date mailed Aug. 3, 2007.

International Search Report Appl. No. PCT/US08/57037, Date mailed: Oct. 2, 2008.

Written Opinion of the International Searching Authority for Appl. No. PCT/US08/57037, Date mailed Oct. 2, 2008.

Supplementary European Search Report, Sep. 30, 2013, Zin Technologies, Inc.

* cited by examiner

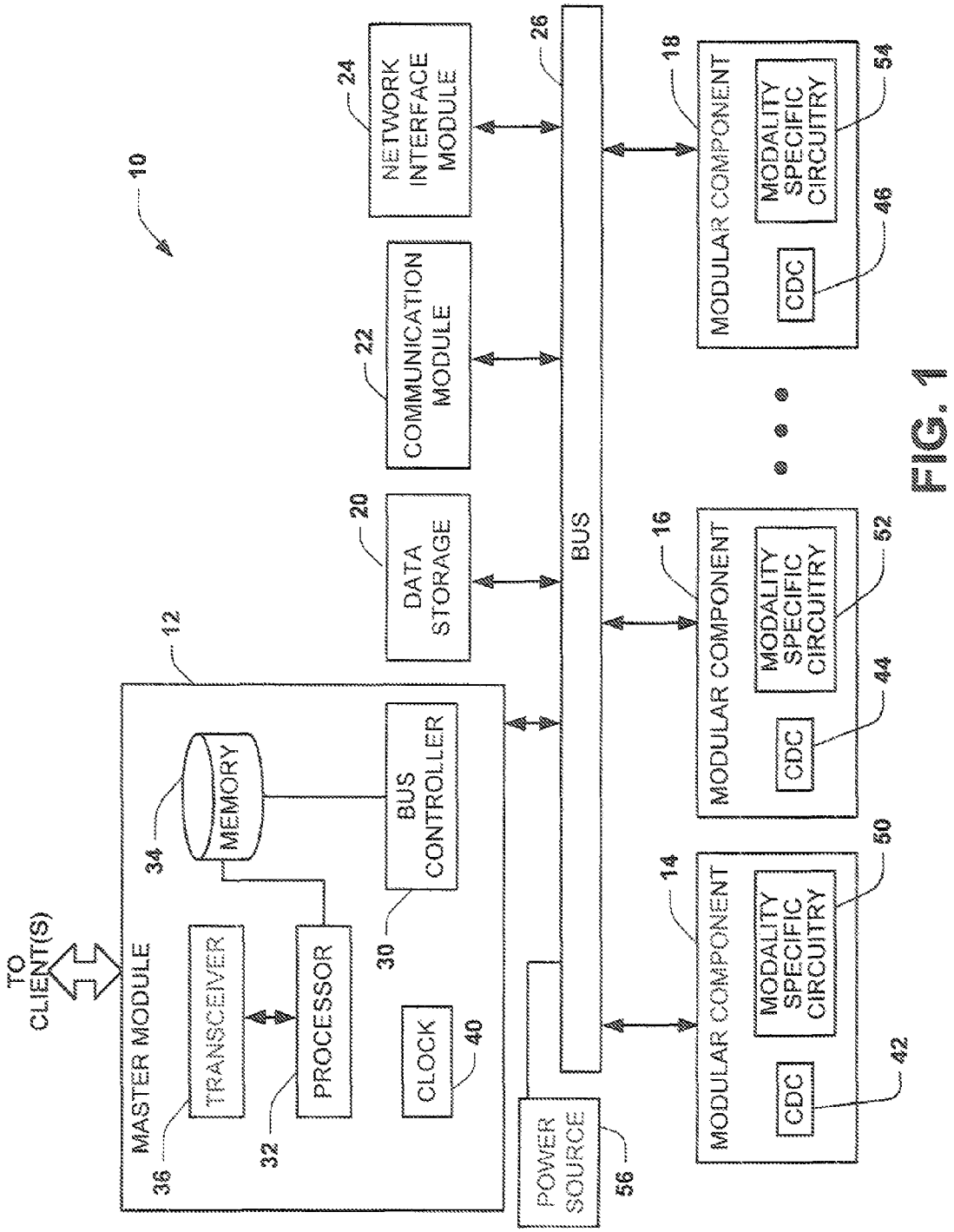
10
TO CLIENT(S)
MASTER MODULE
12
TRANSCEIVER
36
PROCESSOR
32
MEMORY
34
BUS CONTROLLER
30
CLOCK
40
POWER SOURCE
56
BUS
26
NETWORK INTERFACE MODULE
24
COMMUNICATION MODULE
22
DATA STORAGE
20
MODULAR COMPONENT
14
MODALITY SPECIFIC CIRCUITRY
50
CDC
42
MODULAR COMPONENT
16
MODALITY SPECIFIC CIRCUITRY
52
CDC
44
MODULAR COMPONENT
18
MODALITY SPECIFIC CIRCUITRY
54
CDC
46

FIG. 1

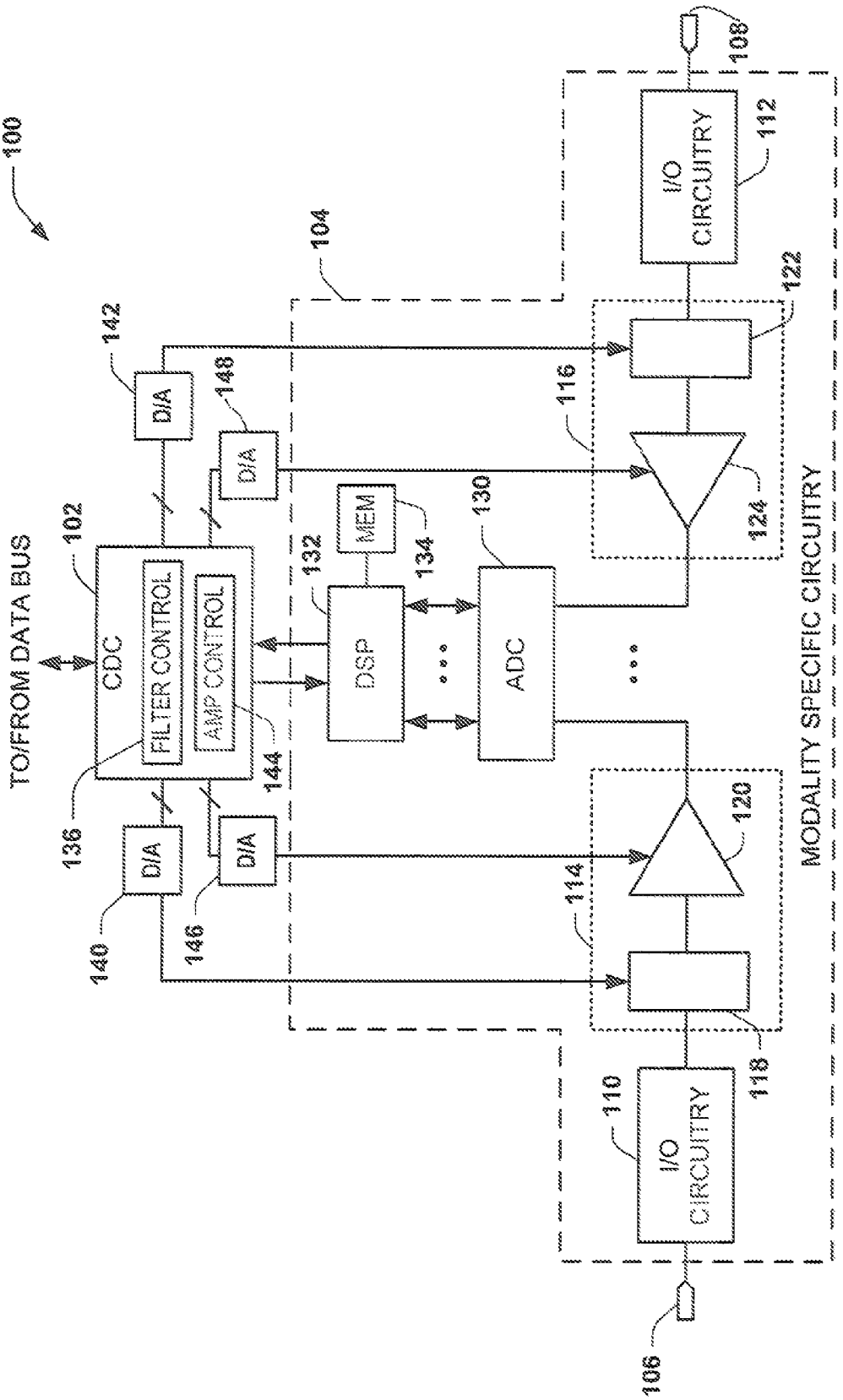
100
TO/FROM DATA BUS
102
CDC
FILTER CONTROL
AMP CONTROL
136
144
142
D/A
148
D/A
140
D/A
146
D/A
104
132
DSP
MEM
134
130
ADC
116
122
124
114
120
118
110
I/O CIRCUITRY
112
I/O CIRCUITRY
108
106
MODALITY SPECIFIC CIRCUITRY

FIG. 2

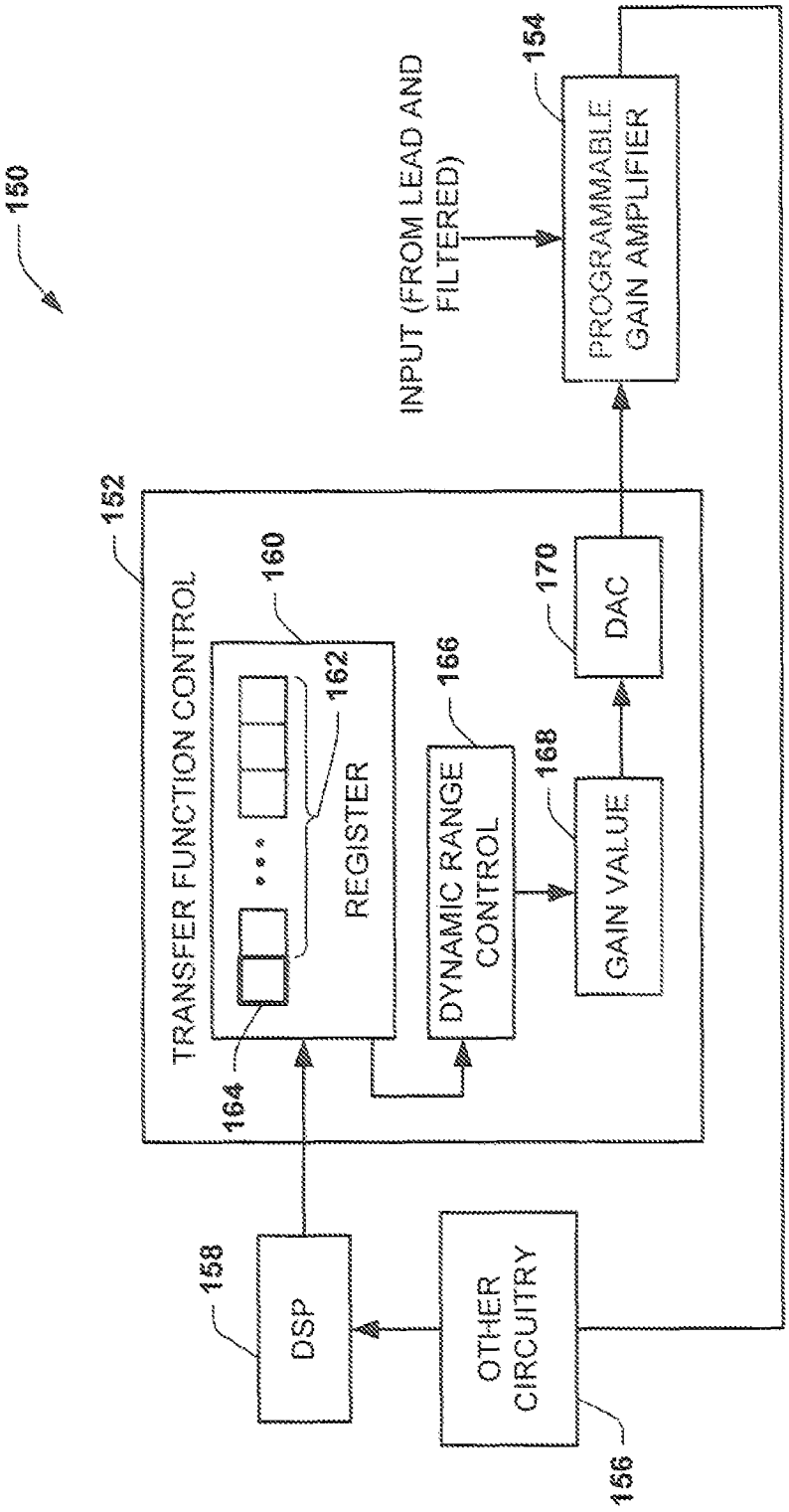
150
INPUT (FROM LEAD AND FILTERED)
154
PROGRAMMABLE GAIN AMPLIFIER
152
TRANSFER FUNCTION CONTROL
160
162
REGISTER
164
166
DYNAMIC RANGE CONTROL
168
GAIN VALUE
170
DAC
158
DSP
OTHER CIRCUITRY
156

FIG. 3

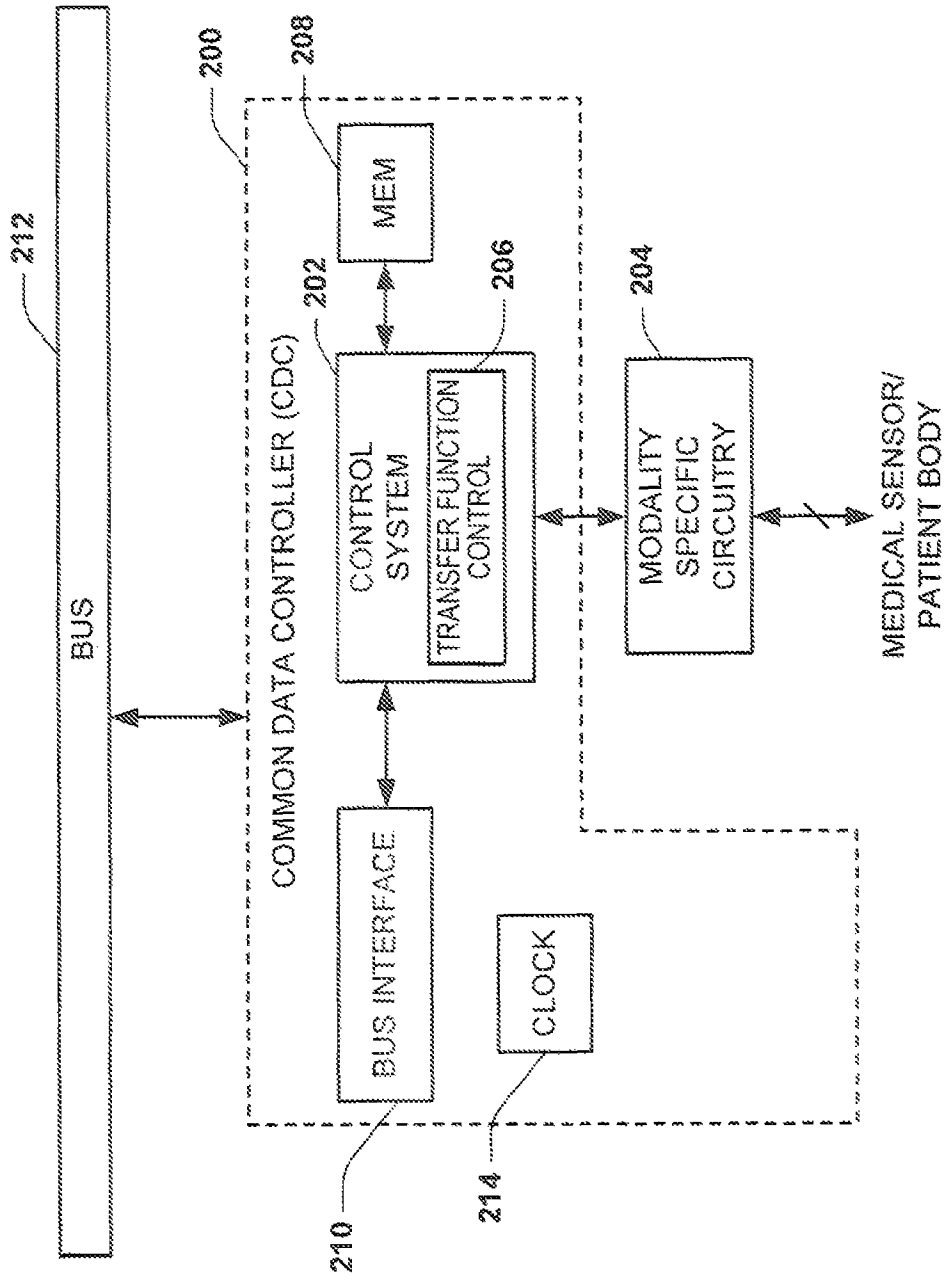
212
BUS
200
208
COMMON DATA CONTROLLER (CDC)
MEM
202
206
CONTROL SYSTEM
TRANSFER FUNCTION CONTROL
204
MODALITY SPECIFIC CIRCUITRY
MEDICAL SENSOR/ PATIENT BODY
BUS INTERFACE
CLOCK
210
214

FIG. 4

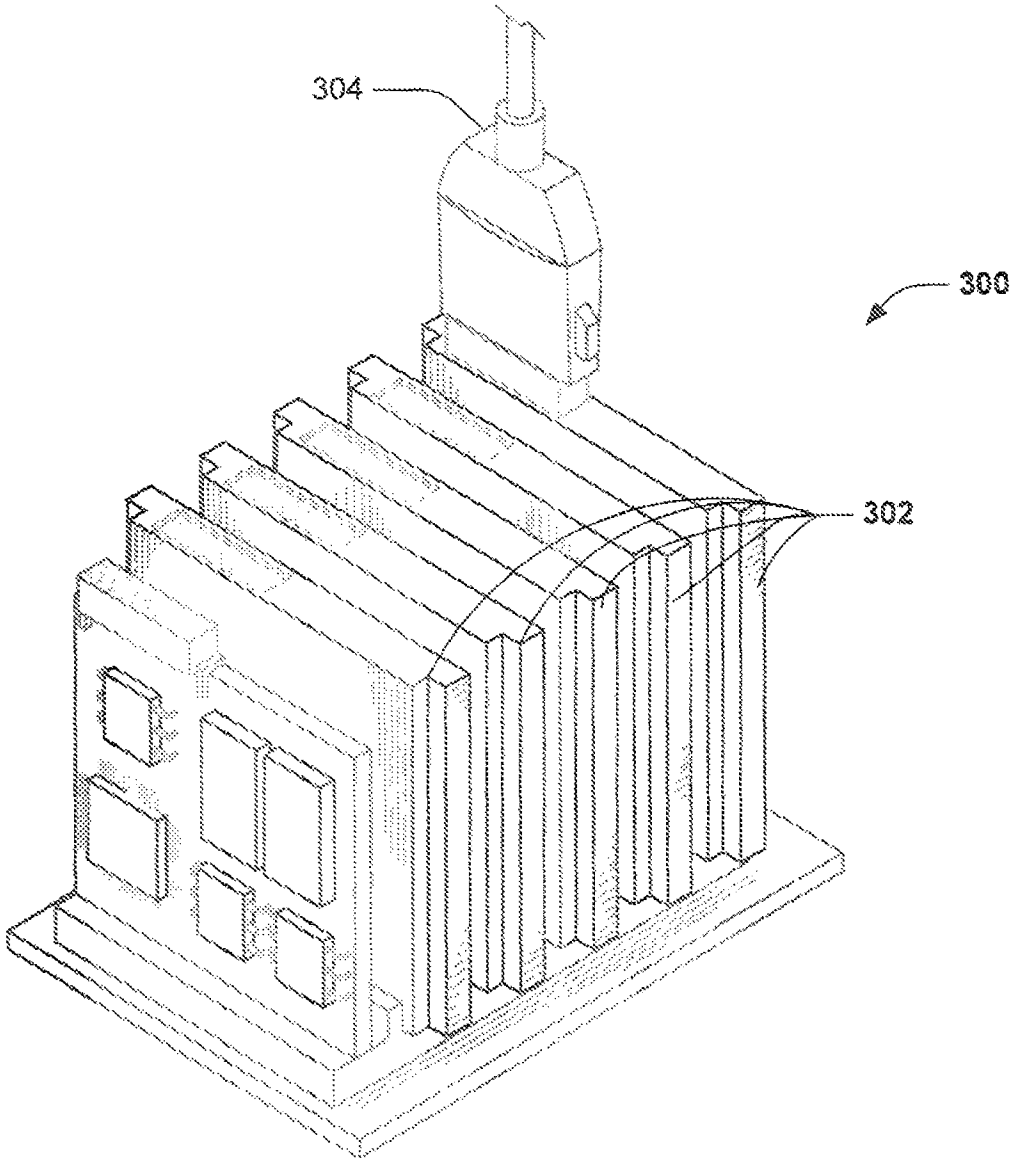

FIG. 5

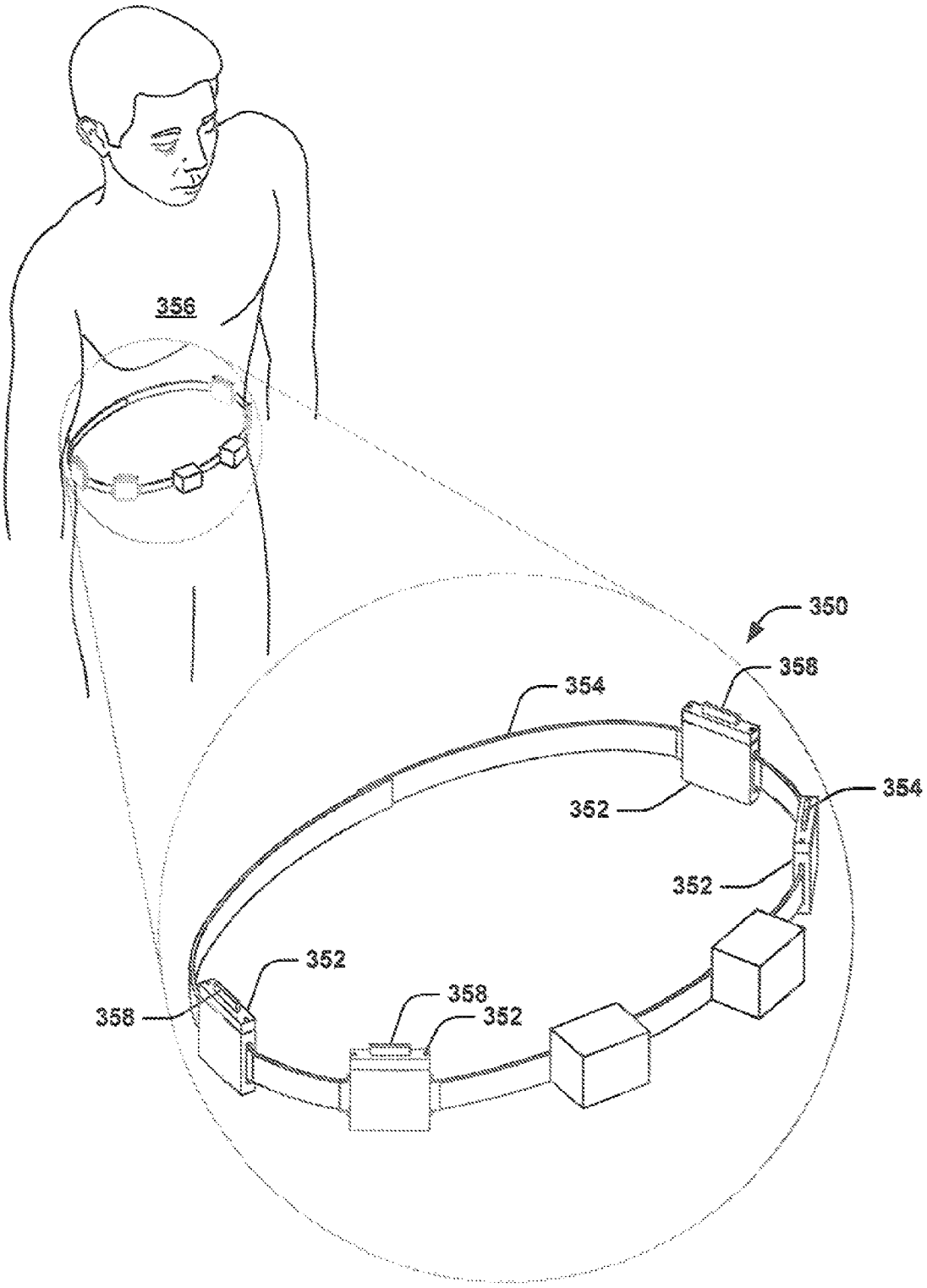

FIG. 6

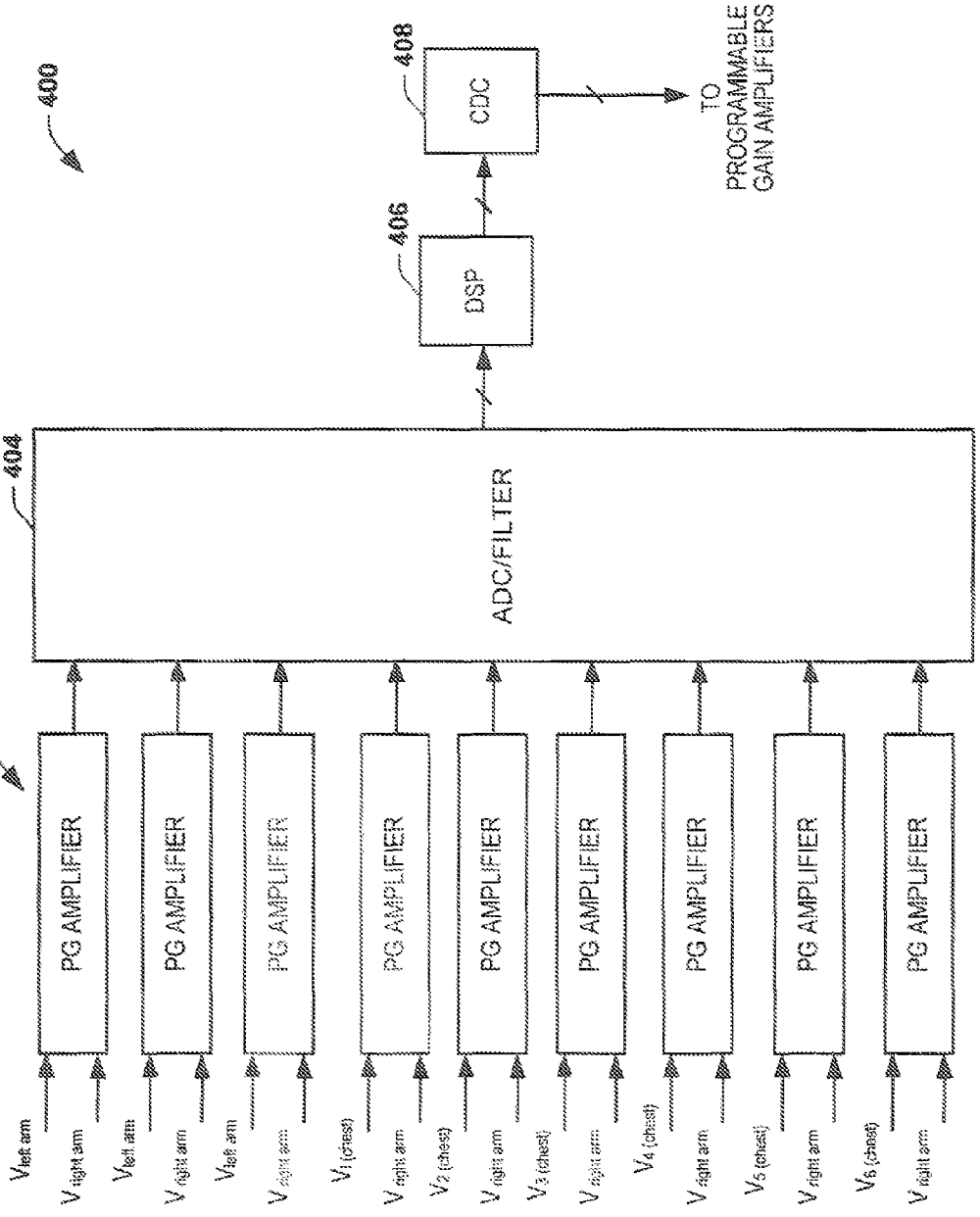
400
402
404
406
408
PG AMPLIFIER
ADC/FILTER
DSP
CDC
TO PROGRAMMABLE GAIN AMPLIFIERS
V left arm
V right arm
V1 (chest)
V2 (chest)
V3 (chest)
V4 (chest)
V5 (chest)
V6 (chest)

FIG. 7

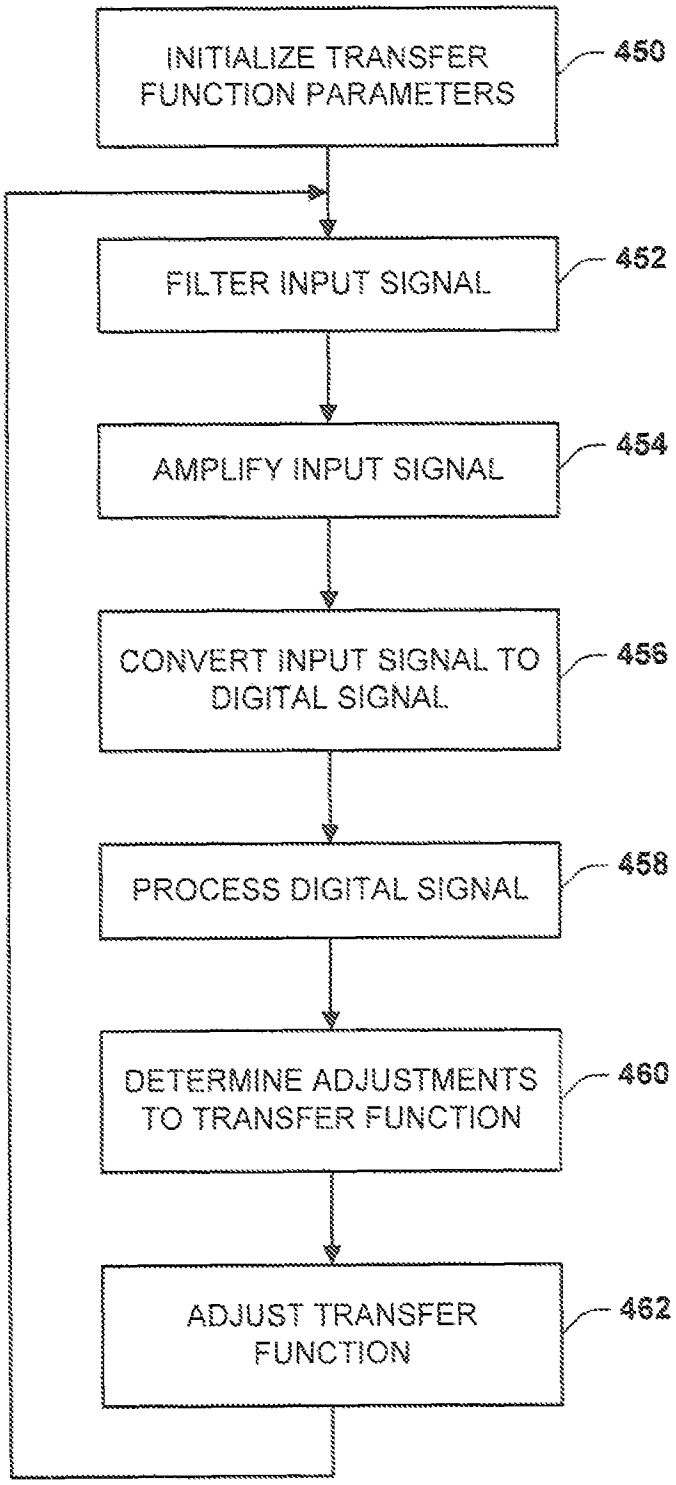
INITIALIZE TRANSFER FUNCTION PARAMETERS
450
FILTER INPUT SIGNAL
452
AMPLIFY INPUT SIGNAL
454
CONVERT INPUT SIGNAL TO DIGITAL SIGNAL
456
PROCESS DIGITAL SIGNAL
458
DETERMINE ADJUSTMENTS TO TRANSFER FUNCTION
460
ADJUST TRANSFER FUNCTION
462

FIG. 8

TRANSFER FUNCTION CONTROL FOR BIOMETRIC MONITORING SYSTEM

RELATED APPLICATION

This application is a continuation-in-part of U.S. patent application Ser. No. 11,236,899, which was filed on Sep. 28, 2005 now abandoned, and entitled COMPACT WIRELESS BIOMETRIC MONITORING AND REAL TIME PROCESSING SYSTEM, the entire contents of which application is incorporated herein by reference.

GOVERNMENT INTEREST

The subject invocation is being developed with government support under Contract No. NNC05CA65C awarded by NASA. The United States government may have certain rights in the innovation.

BACKGROUND

Diagnosis of ailments and treatment of disease often requires an analysis of biological signs obtained from a patient in the course of normal activity over a period of time. Personal health monitors are commonly employed to gather data related to a patients biometric data.

In general, a personal health monitor is a device used to measure and record one or more clinical parameters of a patient for later transmission to the patient's physician or other health care provider. The personal health monitor may be used in a hospital or clinical setting as an adjunct to existing care. Additionally, the personal health monitor may also be used by the patient outside care facilities (e.g., at a patient's home). When used by a patient at home, the patient operates the personal health monitor to record certain bodily clinical parameters. The personal health monitor can be used by the patient who has a condition requiring monitoring of one or more clinical parameters, but who otherwise may not require the level of care such as provided by a hospital. Accordingly, the personal health monitor provides potential savings in medical costs involved with a hospital stay.

For example, continuously monitoring cardiac patients immediately following coronary attacks is important. Such is normally accomplished effectively in the coronary care unit of most hospitals where the patients are continuously monitored following heart attacks to detect arrhythmias of the heart, for example monitoring and warning for ventricular arrhythmias, which may lead to ventricular fibrillation and death. Through prompt recognition and treatment of such warnings related to ventricular arrhythmias in coronary care units, the mortality rate of acute myocardial infarctions has been reduced considerably. In addition, many post myocardial infarction cardiac patients continue to have frequent ventricular extra systoles after discharge from the hospital. Accordingly, it is desired to continuously monitor the patient over a certain period of time and under varying conditions of stress, to determine the effectiveness treatment which has been introduced, such as the proper dosage of medication.

Constant monitoring of such patients after release from the hospital may be difficult because of the logistics involved, and particularly since they can no longer be monitored closely as a group by direct wiring or close telemetry, as commonly implemented in hospital settings. As a result, various systems have been developed to attempt to monitor the ECG signals of out-patients to thereby provide a diagnostic tool for additional treatment or variation of treatment for the patients as may be required. Accordingly, there has been a persistent need to develop health monitoring systems and methods that can effectively alert medical personnel when a patient needs medical assistance.

Nevertheless, such mobile units are typically spacious and difficult to set up and maintain. Moreover, in general these units are not suitable for readily monitoring a plurality of biological signs and biometric conditions. In addition, such systems lack flexibility during usage as they typically have fixed sensor types and configurations.

At the same time, compatibility of such systems with various communication requirements and protocols can create further problems and increase costs. This can further hinder a quick response of the medical staff when health issues arise for an ambulatory patient who employs such monitors. Also, with the current limits in resolution on existing biometric data acquisition modules, the analysis of low magnitude (and sometimes long duration) biometric parameters (e.g., EKG activity) is typically hindered and/or not possible. Such problem is further compounded due to gain amplifiers lack of operation flexibility, wherein the gain amplifiers (e.g., associated with sensors) are commonly set for high exertion activity levels.

SUMMARY

The present invention relates generally to transfer function control for a biometric monitoring system and to a related method.

One aspect of the invention provides a modular apparatus for acquiring biometric data. The modular apparatus may include circuitry operative to receive an input signal indicative of a biometric condition, the circuitry being configured to process the input signal according to a transfer function thereof and to provide a corresponding processed input signal. A controller is configured to provide at least one control signal to the circuitry to programmatically modify the transfer function of the modular system to facilitate acquisition of the biometric data.

Another aspect of the invention provides a modular system for acquiring biometric data. The system includes means for amplifying an input signal indicative of a sensed biometric condition to provide an amplified signal. The system also includes means for processing the amplified signal to provide a computed value representative of the sensed biometric condition. The system also includes means for controlling a transfer function of at least the means for amplifying based on the computed value.

Yet another aspect of the invention provides a method for controlling at least one channel transfer function for a modular unit. The modular unit includes at least one channel configured to receive at least one input signal indicative of a sensed biometric condition. The method includes initializing at least one channel transfer function parameter for circuitry of the at least one channel. The at least one input signal is processed by the circuitry of the at least one channel. The at least one input signal is processed by the circuitry according to the at least one channel transfer function parameter. The processed input signal is further analyzed to determine an adjustment to the at least one transfer function parameter based on the processed input signal. The at least one channel transfer function parameter is dynamically adjusted based on the analyzed processed input signal being outside of expected operating parameters.

BRIEF DESCRIPTION OF THE DRAWINGS

FIG. **1** depicts an example of a system that can be employed to acquire biometric data according to an aspect of the present invention.

FIG. **2** depicts an example block diagram of a modular apparatus that can be implemented according to an aspect of the present invention.

FIG. **3** depicts an example of transfer function control loop that can be implemented in a modular apparatus according to an aspect of the present invention.

FIG. **4** depicts an example of a common data controller that can be implemented according to an aspect of the present invention.

FIG. **5** depicts an example of a modular system that can be implemented according to an aspect of the present invention.

FIG. **6** depicts another example of a modular system that can be implemented according to an aspect of the present invention.

FIG. **7** depicts an example configuration for part of a modular aperture according to an aspect of the present invention.

FIG. **8** is a flow diagram illustrating a method for controlling a transfer function for a modular system according to an aspect of the present invention.

DETAILED DESCRIPTION

FIG. **1** depicts an example of a system **10** that can be utilized to acquire biometric data. As used herein, the term "biometric data" or related phrases (e.g., "biometric parameter" and "biometric information") is intended to encompass biological or biomedical information required from one or more sensors. Biometric data can also relate to information associated with controlling the delivery of a therapy being delivered to a patient or it can also represent information associated with controlling drug delivery equipment or sensor equipment or operating parameters associated with sensor status and operation that may be employed in connection with the acquisition of data or control of therapy devices.

The system **10** includes a plurality of modules. In the example of FIG. **1**, the system **10** includes a master module **12** and a plurality of other modular components **14**, **16**, **18**, **20**, **22** and **24**. Each of the respective modules **12-24** can be programmed and/or configured according to the intended use of the system **10**. At least some of modular components **14**, **16**, **18**, **20**, **22** and **24** can be replaced, inserted and/or swapped for to achieve a desired aggregate function, such as can include collection of biometric parameters, control of desired therapy, communication of data to and from the system **10** or any combination thereof.

For example, a clinician can determine a customized routine for acquisition of biometric data and or therapy. Based on the routine, the clinician can determine which types of modules should be inserted into the system as the modular components **12-24**. For instance, the modular components **14** and **16** can be configured to acquire biometric data associated with a patient and the modular component **18** can deliver a desired type of therapy (e.g., electrical and/or chemical).

By way of further example, the modular component **14** can measure one or more biometric parameters, and/or supply input that is representative of the status of a controlled process. The input can be provided to the master module **12** or another module component **18**, such as can be configured to change one or more outputs for effecting control of the therapy process. For instance, one or more of the modular components **12**, **14** and **16** can supply activation commands to a glucose pump in a patient's proximity, such as when acquired data that pertains to blood sugar of a patient indicates a critical level. Similarly, muscle tension can be employed as a biometric condition to be collected by a modular component, and employed for delivery of chemical or electrical therapy to perform muscle relaxation by the same or a different modular component to a patient. The inputs and outputs of each of the modular component can be binary, (e.g., on or off), and/or analog assuming a continuous range of values.

Each of the respective modules **12-24** can communicate over a data bus or backplane **26**. For example, the bus **26** can enable communication between the master module **12** and any of the other modules **14-24**. Additionally or alternatively, each of the modules **12-24** can communicate with each other over the bus **26**. Those skilled in the art will understand and appreciate various types of buses or communication links and communications protocols that can be utilized to provide for communication between the respective modules **12-24**.

The system **10** can be considered a distributed computing arrangement since certain processing functions can be distributed to the respective modules **14-24**. In this way, computing power requirements of the master module **12** can be reduced based upon the portions of processing being implemented at the respective components **14-24**. In this respect, the power usage of the system can be scaled to the medically desired configuration of the system. By way of further example, each of the modules **14**, **16** and **18** can correspond to a modular apparatus that can be utilized to acquire biometric data that can be transmitted to the master module **12** for aggregate communication to one or more clients, such as a Personal Digital Assistant (PDA), computer, workstation, a server and the like.

In the example of FIG. **1**, the master module **12** can include a bus controller **30** that can be utilized to control data communication over the bus **26**. For instance, the bus controller **30** can transmit data from the master module **12** to the respective modular components **14** through **24** via the bus **26**. As one example, the master module **12** can provide respective program instructions to one or more of the modules **14** through **24** for controlling operation and the particular function being performed by the respective module(s). This can include setting one or more operating parameters as well as defining the specific functions being performed by the respective components. The bus controller **30** can also control the rate at which each of the respective modules may communicate data over the bus **26**. For example, the bus controller **30** can control rate at which data is sent from each of the respective modules **14-24** to the master module (e.g., corresponding to a data acquisition rate for the master module) synchronously or asynchronously.

The master module **12** also includes a processor **32** that can execute program instructions stored in associated memory **34**. For example, the memory **34** can store executable instructions that control high level functions of the bus controller **30** to facilitate and optimize traffic over the bus **26**. The processor **32** can also control other functions associated with the system **10** such as communication to one or more clients through a respective transceiver **36**. The transceiver **36** can be implemented as a wired or wireless type of communication device. Those skilled in the art will understand and appreciate various types of transceivers that can be utilized to transmit and/or receive data.

For instance, the processor can transfer data from the memory to the associated client via the transceiver **36**. Alternatively, the client may be configured to access and download data from selected portions of the memory **34**. For example, the client can run an appropriate user interface (not shown) to initiate or terminate or otherwise control one or more functions associated with operation of the system **10**.

The master module **12** can also include a clock **40** that is used to control timing associated with operation of the master module **12** control the timing associated with data transfer

over the bus **26** via the bus controller **30**. The master module can also employ the clock **40** to control internal operation of the master module, including communication via the transceiver **36**. The transceiver **36** further can be utilized for programming operation of the system **10** through an appropriate input/output port.

The memory **34** can be implemented as including one or more different types of memory, such as volatile or nonvolatile memory. The memory can be accessed by the processor **32** for storing executable instructions for controlling operation of the master module **12** and the system **10**, more generally. The memory **34** can also be utilized to store data that is provided to the master module via the transceiver **36** or bus controller **30**. For example, the memory **34** can be utilized as a temporary data storage device for biometric data and control information that may be received from any of the other respective modules **14** through **24** via the bus **26**.

The system **10** can further include a data storage module **20** that can be utilized for storing addition data that is transmitted over the bus **26**. For example, the processor **32** can store data to the data storage module **20**. Additionally or alternatively, the data storage module **20** can be implemented as a modular component similar to the other modules **12-18**, **22** and **24** in the system **10**. For example, a module having a desired memory capacity can be connected to the bus as the data storage module **20** to increase the storage capacity of the system **10**. This would allow the data storage function of the other the modular components **12-18**, **22** and **24** to be distributed to the data storage module, further increasing the cost efficiency associated with such modules since such modules can be configured with reduced memory requirements. A client thus may be able to access and retrieve data from the data storage module via the master module (through the transceiver **36**, processor **32** and the bus controller **30**) and bus **26**.

The client may also communicate with the data storage module **20** or other modules **12-18**, **22** and **24** in the system **10** by other communication devices. For example, the system **10** can include addition means of communicating to one or more external devices, such as a communications module **22**. For example, the communication module **22** can correspond to a wireless communication module. The wireless communication module **22**, for example, can transmit according to any one of a variety of known wireless protocols, such as an 802.11x standard, Bluetooth, cellular communications and the like.

Additionally or alternatively, the system **10** can include a network interface module **24** that can be programmed and/or configured to connect to a computer network, such as a local area network (LAN) or a wide area network (WAN) such as the internet. As one example, the network interface module **24** can be electrically connected to the network via a standard network connection. The network interface module **24** thus can provide an appropriate connection with the desired network. Thus, in the example of FIG. **1**, communications can be implemented over the bus **26** via the bus controller **30**, over the bus through the network interface module **24** and over the bus via the communication module **22**. In this way data can be transmitted to and received from the system **10** via the network interface module **24**.

In the example of FIG. **1**, the modular components **14**, **16** and **18** can be programmed and/or configured based on the requirements of the biometric condition(s) that is to be measured and/or other functions that are to be controlled, such as including the administration of a desired therapy. Each of the respective components **14**, **16** and **18** can includes a common architecture, which corresponds to circuitry referred to herein as a common data controller (CDC) **42**, **44** and **46**. As one example, each of the CDCs **42**, **44** and **46** can be a common architecture that includes a processor or controller and other circuitry that is configured to control operation of the modular component as well as facilitate communication to and from the respective modular component via the bus **26**.

Each of the modular components **14**, **16** and **18** also includes modality specific circuitry **50**, **52** and **54**. The modality specific circuitry can vary according to the type of biometric condition data that is to be acquired by a respective module and/or the type of therapy that might be delivered by the respective module. That is, the modality specific circuitry **50**, **52** and **54** of each of the modules **14**, **16** and **18** is programmed and/or configured to perform a predetermined biometric function (e.g., sensing or therapeutic function—a/k/a modality). For instance, one or more of the modules **14**, **16** and **18** can be configured to acquire a predetermined type of biometric condition data by sensing biometric or biological conditions of a patient. By way of further example, each of the modality specific circuitry **50**, **52** and **54** can be adapted to acquire data related to the modalities of electromyography (EMG), electrocardiography (ECG), electroencephalography (EEG), plantar pressure, joining angle, pulse oximetry, blood pressure, core body temperature, blood glucose, and the like. Additionally or alternatively, one or more other modules **14**, **16** and **18** can be configured to administer a desired therapy (e.g., electrical or chemical therapies).

Thus, each of the modality specific circuitry **50**, **52** and **54** includes circuitry operative to receive an input signal indicative of a biometric condition. As described herein, such input signal indicative of the biometric condition can correspond to a signal representing a sensed biometric condition of the patient. Alternatively, in other circumstances, the input signal can be a signal (e.g., feedback signal) associated with a delivery of a therapy to the patient, such as may be in the from of chemical or electrical therapies.

Advantageously, the particular combination of data acquisition and/or therapy administration thus can be tailored on a patient-by-patient basis by interchanging or swapping various modular components, having different modality specific circuitry, into or out of the system **10**. As described herein, each of the modular components **12-24** can have a form factor, which may be a standard or proprietary form factor, which is dimensioned and configured for swappable connection into the system. Thus, as the intended use of the system changes, different modules can be replaced or swapped for other modules so that the aggregate system meets the needs for particular patient. For example, the respective connections between the modules **12-24** and the bus are schematically represented as bi-directional arrows. Such connections enable data communication from a given one of the respective modules to one or more other modules over the bus **26**, such as under the control of the bus controller **30** in the master module **12**. Additionally, the connections can provide power to each of the respective modules **12-24**. For instance, a power source **56**, such as including a voltage regulator and one or more batteries) can distribute power to each of the respective modules via the bus **26**. Alternative power systems can be utilized to provide power, such as may be implemented by separate power connection or in one or more of modules **12-24**.

Each of the modular components **14**, **16** and **18** (whether it is sensing biometric condition of a patient or controlling delivery of a therapy) operates according to a transfer function. The transfer function of the modular component can be derived as the aggregate (e.g., by convolution) of transfer functions for circuitry that forms each of the modular components. For instance, each channel of the modality specific

circuitry **50**, **52**, and **54** can include several different circuit components, each having a unique component transfer function, which collectively determines the channel transfer function for a respective channel of the modality specificity circuitry. Moreover, a given modular component can include a plurality of channels, each of which channels can be represented as a separate channel transfer function. Each of the channel transfer functions can be adjusted dynamically to improve performance, such as by adjusting one or more component transfer functions.

By way of example, a given channel of a modality specific circuit **50**, **52** and **54** can include an analog input circuit configured to process a received input signal according to an associated transfer function and to provide a corresponding processed input signal. The modality specific circuit can include additional filtering and amplifier stages, which also can be represented as respective transfer functions, and provide amplified and filtered output signals according to their respective transfer functions. Additionally conversion to a digital signal and subsequent digital processing stages can also be represented by corresponding transfer functions. Thus, the transfer function associated with the different stages or circuit parts in the modality specific circuitry cooperate to define the plant transfer function for each channel and each modular component **14**, **16**, **18** as a whole.

The CDC **42**, **44** and **46** is configured to provide one or more control signals to the modality specific circuitry **50**, **52** and **54**, respectively, to modify the transfer function characteristics of the modular component. For instance each CDC **42**, **44** and **46** can dynamically modify the transfer function associated with each given channel of the respective modality specific circuitry. As one example, the CDC can adjust the transfer function for a given channel so that a maximum resolution of the sensor can be achieved according to the dynamic range of the circuitry.

By way of further example, each CDC can include a register (not shown) that is configured for storing a digital value representing the corresponding input signal that has been processed by the modality specific circuitry. The CDC can adjust the transfer function of the modality specific circuitry such that the maximum resolution of the sensor can be represented with maximum number of bits available in the register. In this way, the biometric condition data can be acquired with a substantially maximum resolution according to dynamic range of the data acquisition circuitry and the available register memory in which the data is stored. For instance, the CDC can adjust the transfer function by changing the gain or one or more amplifiers of the modality specific circuitry so that the signal value that is accommodated in the register with a substantially maximum resolution according to the dynamic range of the circuitry.

FIG. **2** depicts an example of a modular apparatus **100** that can be implemented according to an aspect of the present invention. The modular apparatus **100** includes a CDC **102** that is electrically coupled with modality specific circuitry **104**. The modular apparatus **100** can be self contained within a module having a preconfigured form factor, which can vary according to system requirements, such as including the examples shown and described herein. The modality specific circuitry **104** includes one or more inputs or outputs that can be electrically coupled to respective sensors or therapy delivery devices (not shown). The respective ports for connection to the sensor or therapy delivery devices are indicated schematically at **106** or **108**. While two such ports **106** and **108** are depicted in the example of FIG. **2**, it will be understood and appreciated that there could be any number of one or more such ports for connecting with appreciated that there could be any number of one or more such ports for connecting with appropriate sensors or therapy delivery devices. Each port **106** and **108** thus defines a respective channel of the modular apparatus **100** that can be represented in conjunction with other circuitry as a corresponding channel transfer function.

For purposes of consistency, in the example of FIG. **2** each of the respective ports **106** and **108** is illustrated as a corresponding sensor input port that can receive a sensor input signal, such as from an associated sensor (not shown). The characteristics (e.g., frequency and amplitude) of the input signal received at **106** and **108** thus can vary according to the type of biometric condition being sensed. The modality specific circuitry **104** includes corresponding analog input circuitry **110** and **112** that is associated with each input port for providing isolation and analog pre-processing the respective input signal. Those skilled in the art will understand and appreciate various types of input circuits (e.g., isolation amplifiers) that can be utilized to receive signals from appropriate sensors and provide corresponding input signals. The input circuitry **110** and **112** in the modality specific circuitry thus can vary according to the modality and the biometric conditions intended to be monitored by the modular apparatus **100**. Alternatively, the analog circuitry **110** and **112** might correspond to output or control circuitry (e.g., drivers) configured to control delivery of appropriate therapies, such as a chemical or electrical based therapies. The analog circuitry **110** and **112** further can provide for isolation between the leads and sensors connected as the ports **106** and **108** and the other processing performed by the modality specific circuitry **104**.

Each of the circuits **110** and **112** provides corresponding analog outputs signals to filter networks **114** and **116**, respectively. In the example of FIG. **2**, the filter network **114** includes a filter block **118** and an amplifier block **120** and the filtered network **116** includes a filter block **122** and amplifier block **124**. It should be understood and appreciated that each of the respective filters **118** and **122** can include any number of one or more filters that can be represented as a corresponding transfer function with poles and zeros and respective filter coefficients. Additionally, each of the amplifiers **120** and **124** can include any number of one or more amplifiers that can be represented by a corresponding transfer function that represent the gain implemented by the amplifiers. Additionally, while the schematic depiction of the filter networks **114** and **116** shows a filter stage followed by an amplifier stage, there can be various arrangements, orders, and combinations of amplifier and filter stages to provide the filter networks.

The filter network **114** and **116** can be programmable, such as based on control signals from the CDC **102**. For example, the filter coefficients of the filter blocks **118** and **122** can be programmed. Additionally, or alternatively, the gain of the respective amplifiers **120** and **124** can be programmed. That is, the amplifier block **120** and **124** can be implemented as programmable gain amplifiers. The filter networks **114** and **116** that can perform associated filtering and amplification of the analog input signals (from the analog input circuitry **110** and **112**) and provide corresponding filtered and amplified signals to an analog-to-digital converter (ADC) **130**. As one example, the ADC **130** can be implemented as a Sigma-Delta ($\Sigma\Delta$) ADC that operates on each of the respective channels to provide a corresponding high-resolution digital representation of the filtered and amplified signals. Thus, the ADC **130** provides a corresponding digital output signal for each respective channel of the modality specific circuitry **104**.

The respective digital outputs for each channel are provided to a digital signal processor (DSP) **132**. The digital outputs can be provided as separate connections (e.g., parallel

outputs) of the ADC **130** or the digital output can be provided via a corresponding bus or other communication link. The DSP **132** is connected with memory **134**. For example, the memory **134** can contain executable instructions that cause the DSP to compute a predetermined function on the digital representation for each of the filter and amplified channel inputs. The respective function can be a linear function or a nonlinear function according to the type and content of the data received at the respective inputs **106** and **108**. The function computed by the DSP for each channel of the apparatus **100**, for example, can be determined according to the transfer function associated with each respective channel of the apparatus **100** of the modular apparatus **100**. Thus, the functions being computed by the DSP for each channel of the apparatus **100** can be the same or different. The DSP **132** provides corresponding computed values as outputs to the CDC **102**. The CDC **102** can also control the function computed by the DSP (or other operations of the DSP), such as by providing program instructions that can be stored in the memory **134**. For example, the CDC **102** can modify the functions at run time, such as during normal operation or during a programming mode of the modular apparatus **100**.

For example, the CDC **102** can provide one or more control signals to each of the filter networks **114** and **116** to adjust the transfer function associated with each respective channel. The CDC **102** can adjust gain according to the dynamic range of each respective channel and the associated data acquisition device. As mentioned above, the transfer function associated with a given channel can include a representation of operating characteristics associated with the circuitry **110** or **112** as well as the respective filter network **114** and **116**. The transfer function of a channel can also represent operation of the ADC **130** (e.g., the latency through the sigma delta modulator) as well as include poles and/or zeros representing the signal processing performed by the DSP **132**. The respective components of each individual channel transfer function thus can be convolved to provide an aggregate transfer function channel (H_{CH}), such as follows:

$$H_{CH}=H_1+H_2+H_3 \ldots H_N$$

where H_1 through H_N represent the individual component channel transfer function components of the different portions of the modality specific circuitry.

The CDC **102** thus can provide one or more control signals to the filter networks **114** and **116** to adjust the transfer function and thereby establish a desired dynamic range for each respective channel. As a further example, the channel transfer function can be estimated a priori based on the configuration of the modality specific (H_{CH}) circuitry **104** and the intended of such circuitry. The channel transfer function (H_{CH}) for a given channel of the system **100** can be determined to provide a highest available dynamic range for a given modality. For example, the form of respective transfer function can be derived via appropriate simulation device (e.g., matlab). The transfer function can be programmed into the CDC **102**, which can be further adjusted dynamically during operation, such as by adjusting respective filter coefficients and gain in the analog domain via control signal provided to the respective filter network **114** and **116**. Additionally and alternatively, the CDC can adjust the transfer function in the digital domain (e.g., such as by programming the operation of the DSP **132**).

By way of further example, the CDC **102** can include a filter control block **136** that is programmed and/or configured to set one or more filter coefficients associated with each of the filter networks **114** and **116** of the apparatus **100**. Filter control **136** can provide the respective control signals through the corresponding digital-to-analog converters, indicated at **140** and **142**, to set respective coefficients of the respective filter blocks **118** and **122**. The filter coefficients can be selectively adjusted during operation to optimize the respective filter function based on the filter control **136** implemented by the CDC **102**. The respective filter coefficients can be adjusted as a function of outputs computed by the DSP **132** for each of the respective channels. As one example, the coefficients associated with the filter networks **118** or **122** can be adjusted based on the operation of the channel, which further can vary according to biometric condition being monitored. The adjustments can be made dynamically based on the instantaneous DSP output or based on multiple DSP output samples acquired over a period of time (e.g., time averaged representation of the channel data). Alternatively or additionally, the filter control **136** can adjust filter coefficients for each channel based on the relative values of DSP outputs for a plurality of channels.

The CDC **102** can also include an amplifier control block **144** that is programmed and/or configured to provide a control signal for setting the gain of each of the respective amplifiers **120** and **124** associated with each respective channel. For example, the amplifier control block **144** can provide a gain value that is converted to a corresponding analog gain value by a corresponding digital to analog converters **146** and **148**. The digital-to-analog converters **146** and **148** can provide corresponding gain for values, having respective voltage levels, adjusting the gain of the respective amplifiers **120** and **124**. As one example, the amplifier control block **144** can set the respective gain for each respective channel in the modular apparatus **100** to achieve a maximum dynamic range of the data acquisition circuitry.

As mentioned above the initial transfer function for each respective channel in the modular apparatus **100** can be predetermined and programmed in the CDC **102**. The CDC can employ the filter control **136** and amplifier control **144** to adjust the initial transfer function for increased efficiency and higher dynamic range for each of the respective channels in its operating environment. The transfer function for the modular apparatus **100** can vary according to the modality (e.g., type of sensor or therapy dispensing function associated with the modality specific circuitry **104**). The filter coefficients and gain can be adjusted as discrete or continuous increments or decrements over a range of available settings. Additionally, the particular modality can be modified programmatically by the CDC **102**, if necessary, and a new transfer function can be programmed at the CDC such as via the data bus programmed by a master module as described herein.

The transfer function can be programmed via the bus. Additionally or alternatively, a set of base transfer functions parameters can be programmed in memory (e.g., as a look-up table) of the CDC **102**. For example, at start-up, a particular transfer function can be selected and set for each of the respective channels, such as based upon the function or purpose associated with the modality specific circuitry **104** and the status of the device **100**. As mentioned above, each of the respective channels can have an initial starting transfer function that may be the same or different. As one example, it may be desirable, during operation, to replace leads or sensors for a given modality specific circuitry **104** with a different type of lead or sensor. In such a situation, the filter control **136** and amplifier control **144** of the CDC **102** can detect the variations in the received input signal from the DSP for the respective channel(s), and, in turn, implement appropriate changes to the transfer function, such as via adjustments to filter coefficients and/or the gain for the respective channel.

It will be appreciated that the functionality of DSP and CDC, while shown and described as being implemented by separate circuitry, can be integrated in single processor or an application specific circuit (ASIC) that can be programmed and configured to perform the combined functions. Those skilled in the art will further understand and appreciate that various implementations of modality specific circuitry that can also be integrated with one or both of the CDC and the DSP.

FIG. **3** depicts an example of a transfer function control loop **150** that can be implemented according to one aspect of the invention. For instance, the control loop **150** can be employed to achieve a maximum dynamic range of associated conditions data acquisition circuitry for a given channel, such as a sensor and/or a therapy delivery device. The control loop **150** includes a transfer function control block **152** that is programmed and/or configured to adjust one or more parameters of a transfer function for the respective channel. As described herein, the transfer function can be derived as an aggregate transfer function corresponding to the respective portions of the modular apparatus.

In the example of FIG. **3**, the given channel receives an input signal indicative of a conditions condition. The input signal, for instance, can be provided from a specially configured sensor via an electrical path (e.g., including a lead) to a programmable gain amplifier **154**. The electrical path may also include other input circuitry (e.g., an analog isolation amplifier) which has been omitted from FIG. **3** for purposes of clarity. The programmable gain amplifier **154** receives the input and provides a corresponding amplified output signal to other circuitry **156**. For example, the other circuitry **156** can include additional analog amplifiers as well as filtering circuitry, such as described herein. The other circuitry **156** also includes circuitry configured to perform analog-to-digital conversion on the amplified input signal. As described herein, analog-to-digital conversion can be performed by ΣΔ conversion to provide a corresponding high resolution digital output. While the example of FIG. **3** is shown and described in relation to a single channel, those skilled in the art will understand that a give modular apparatus can include appropriate circuitry for implementing transfer function control with respect to any number of one or more channels.

The corresponding digital representation of the amplified signal can be provided to a corresponding signal processor, such as a DSP **158**. The DSP **158** is programmed and configured to compute a function from the digital representation provided by the other circuitry **156**. The value of the computed function is provided to the transfer function control block **152**. The transfer function control, for example, can include a register **160** configured and arranged for storing a predetermined number of bits. The register can be implemented in a separate register or in other types of memory configured for storing the digital value in a predetermined number of bits (e.g., in a predefined address space of RAM). As an example, one portion of the memory block, such as the least significant bits (LSB), indicated at **162**, can have a word length or number of bits designed for accommodating the DSP output. Another portion of the register **1660**, such as one or more of the most significant buts (MSB), indicated at **164**, can be utilized for storing overflow bits(s). The transfer function control **152** can employ the overflow bit(s) **164** for determining adjustments to the transfer function.

A dynamic range control block **166** thus can be configured to control changes to the channel transfer function based on the compound value stored in the register **160**. As one example, the dynamic range control **166** can increment or decrement a gain value **168** based on the value in the overflow data block **164**. For instance, if the overflow data **164** indicates that the computed value provided by the DSP **158** indicates that available register space **162** has been exceeded, the dynamic range control **166** can decrement the gain value accordingly. In contrast, if the overflow data **164** is not indicative of the output of the DSP not filling the available space in the register, the dynamic range control **166** can cause an increase in the gain value **168**. To mitigate fluctuations, the dynamic range control can implement adjustments based on a time-averaged value of the MSB **164**.

The gain value **168** can be converted to a corresponding analog signal via a digital-to-analog converter (DAC) **170** that is utilized to program and set the gain of the programmable gain amplifier **154**. For example, the analog output provided by the DAC can correspond to a gain factor that produces an increase or decrease in resolution of the input. The gain factor can be a continuous value or a selected set of discrete values (e.g., voltages), which further may vary according to the configuration of the programmable gain amplifier **154**.

From the foregoing, it will be appreciated that the transfer function control loop **150** can operate to set the gain as to maximize the dynamic range of the date acquisition sensor that provides the input to the programmable gain amplifier **154**. The transfer function control **152** can implement this process (e.g., adjustments to the channel transfer function) during a calibration phase, such as may occur at power up or reset. Alternatively or additionally, the transfer function control **152** can adjust the transfer function during normal operation, such as based on detecting variations in the value computed by the DSP **158** outside of expected operation parameters.

Those skilled in the art will understand and appreciate that a similar control loop can be utilized to set filter coefficients or other transfer function parameters based on the discussion contained herein. Such transfer function controls can be programmed in a CDC or other portion of the modular apparatus (e.g., the apparatus **100** of FIG. **2**). Additionally, those skilled in the art will understand and appreciate that each respective active channel in a modular apparatus can implement a similar transfer function control to adjust the respective channel transfer function, including gain and filter coefficients associated with each transfer function. The particular controls further can vary according to the modality and biometric conditions being monitored or therapy being delivered by the modular apparatus.

FIG. **4** depicts an example of a common data controller (CDC) **200** that can be implemented in a modular apparatus in a system according to an aspect of the present invention. In the example of FIG. **4**, the CDC includes a control system **202** that is programmed and configured to control operation of a modular apparatus. For example, the control system **202** can control one or more operating parameters associated with a modular specific circuitry **204**. As described herein, for example, the control system **202** can include a transfer function control **206** that is programmed and/or configured to adjust one or more transfer function parameters, such as filter coefficients and/or gain values of a corresponding filter network during operation to maximize the dynamic range and performance of the modular apparatus. The transfer function control **206** can implement separate control for each respective channel transfer function according to the number of channels, configuration and intended use of the modality specific circuitry **204**.

The control system **202** can implement instructions for implementing such control features based on instructions stored in associated memory **208**. The memory can include non-volatile memory and/or volatile memory for storing

appropriate executable instructions. Thus, the control system **202** may comprise a processor or control logic (not shown) for executing such instructions. The CDC **200** can also include a bus interface **210** that is utilized for transmitting and receiving data via an associated data bus **212**. The data bus **212**, for example, can be implemented as a backplane for communicating data relative (to and/or from) the CDC **200** and one or more other modules or devices (not shown, but see, e.g., FIG. **1**) that may be connected the bus **212**. The bus interface **210** thus is configured to facilitate such communication, such as having an input queue for receiving data from the bus and an output queue for transmitting data over the bus **212**. Those skilled in the art will understand and appreciate various communication protocols and bus architectures that can be utilized.

For data to be transmitted over the bus, for example, the memory **208** can include a FIFO or other data structure that can be utilized for storing data from the modality specific circuitry. Such data in the FIFO can include calibration data associated with operation of the modular apparatus as well as biometric data acquired from one or more channels of the modality specific circuitry **204**. As the FIFO or other data structure receives and is filled with data from the modality specific circuitry **204**, the stored data can then be transmitted via the bus **212** to an associated destination module, such as a master module in the modular system.

Since each modular apparatus can be employed to acquire a different type of modular apparatus, the FIFO in the memory **208** may fill at different rate relative to a corresponding FIFO in a different modular apparatus. To accommodate such potentially varying acquisition rates, each FIFO can be configured to a memory size according to the type of modality (e.g., which defines its acquisition rate). A bus controller (not shown) can control the rate at which each modular apparatus transmits and receives data via the bus **212** in an asynchronous manner.

The CDC **200** further can include a clock **214** for controlling the timing of operation within the modular apparatus including the CDC **200** and the modality specific circuitry. Alternatively or additionally the modality specific circuitry can include its own clock for synchronizing timing of data acquisition from one or more acquisitions.

FIG. **5** depicts a perspective view of one example embodiment of a modular system **300** that can be constructed in accordance with an aspect of the invention. The modular system **300** includes a plurality of modular apparatuses **302** configured for performing desired functions such as described herein. For example, by replacing, inserting, swapping a set of one or more modular apparatuses **302**, the modular system **300** can be configured to operate for acquisition of particular biometric data, control delivery of desired therapy and/or transmit data based on a particular transmission protocol. As one example, one or more of the modular apparatuses **302** in the modular system **300** can be adapted to acquire data related to electromyography (EMG, frequency range 2-500 Hz), electrocardiography (ECG, frequency range 0.05-100 Hz), resolution of 24 bits, electrocardiography (ECG, frequency range of 0.16-100 Hz), blood pressure, joint angle, pulse oximetry and the like. Each of the modular apparatuses **302** can be connected to the corresponding sensor(s) via an appropriate connector **304**.

Each of the modular apparatuses **302** further can include one or more channels for acquiring and processing input signals indicative of corresponding biometric conditions. Each channel of each modular apparatus, for example, has a transfer function that can be adjusted independently, such as described herein, to achieve a desired dynamic range for data acquisition at a corresponding resolution. Additionally, different modular apparatuses, having different sensor requirements, can acquire data at different sample. For instance, asynchronous data collection can be implemented across modular apparatuses **302**, while at the same time employing a synchronous clock within each modular apparatus to provide timing on module for data collection functions.

FIG. **6** depicts another embodiment of a modular system **350** that can be implemented according to an aspect of the invention. In the example of FIG. **6**, the modular system **350** includes a plurality of modular apparatuses **352** spatially distributed along a common communication link (or bus) **354**, such as can be implemented as part of a belt or harness attached to or disposed around the body of a user. While the communication link **354** is depicted as a belt in the example of FIG. **6**, other types of harnesses (e.g., a chest harness, wrist band, arm band, a hat or the like) could be implemented. Certain modular apparatuses **352** can thus be located proximate to predetermined portions of a patient's body **356**. Data can be communicated with such modular components **352** over a common communication link, or network, wherein all modules on the network communicate via a standard communications protocol. At least some of the modular apparatuses **352** include a modular component **358**, which can be replaced, inserted or swapped for desired operation. Each modular component **358** has a form factor configured according to the requirements and interface provided at the apparatus **352**.

In such a distributed system, one or more I/O modules are provided for interfacing with a process, wherein the outputs derive their control or output values in the form of a message from a master controller over the bus **354**. For example, a modular component can receive an output value from a processor, via a communications network or a backplane communications bus. The desired output value for controlling a device associated with a given biometric condition can be generally sent to the output module in a message, such as an I/O message. The modular component that receives such a message can provide a corresponding output (analog or digital) to the controlled process. The modular component can also measure a value of a process variable and report the input values to a master controller or peer modular component over the network or backplane **354**. The input values may be used by the master module for performing control computations.

FIG. **7** depicts one example block diagram of part of a modular apparatus **400** configured for acquiring ECG measurement data in accordance with an aspect of the invention. While the particular example of FIG. **7** shows an example configuration having a plurality of channels for acquiring ECG data, it will be appreciated that various other types and configurations of units can be provided according to an aspect of the invention.

In the example of FIG. **7**, the modular apparatus **400** includes a plurality of programmable gain amplifiers **402** that receive respective channel inputs. The channel inputs further can go through additional analog circuitry (not shown), such as including filters and isolation amplifiers. The programmable gain amplifiers **402** provide corresponding amplified input signals to an ADC/filter block **404**. The ADC/filter block converts the amplified inputs signals into corresponding digital representations, such as described herein. The ADC/filter block **404** provides the digital channel representation and provides the computed value to a CDC **408**.

As described herein, each channel has a respective transfer function that can be adjusted. The CDC can provide a control signal for adjusting one or more parameters of each channel transfer function. For example, the CDC **408** performs trans-

fer function control processes to adjust each channel transfer function dynamically, such as to achieve a maximum dynamic range. The CDC **408** thus provides a control signal to each of the programmable gain amplifiers **402** to adjust the gain according to the transfer function control performed on the computed value from the DSP **406**. In addition, each channel can be individually configurable by the CDC **408**, such as from 10 Hz sample rate, with a total maximum data throughput exceeding 32 kHz. Each channel thus can be provided with a desired dynamic range and operating frequency. Additionally, as described herein, each channel can have an individual set of programmable filters (e.g., programmable by the CDC **408**) to allow for improved filtering and overall performance.

In view of the structural and functional features described above, certain methods will be better appreciated with reference to FIG. **8**. It is to be understood and appreciated that the illustrated actions, in other embodiments, may occur in different orders or concurrently with other actions. Moreover, not all features illustrated in FIG. **8** may be required to implement a method according to the subject invention. It is to be further understood that the following methodology can be implemented in hardware (e.g., one or more processors, such as in a computer or computers or in a biomedical device), software (e.g., stored in a computer readable medium or as executable instructions running on one or more processors), or as a combination of hardware and software.

FIG. **8** is a flow diagram depicting a method for adjusting a channel transfer function according to an aspect of the invention. The method can be implemented as part of a calibration phase or during normal operation. The method begins at **450** in which transfer function parameters are set to their starting values. For example, the starting values may be derived based on simulation or empirical studies for the modular apparatus and its intended modality. The starting values can thus be stored in memory of the modular apparatus.

At **452**, a received input signal can be appropriately filtered to remove noise from the signal and other unwanted signal components. The filtering can be defined by programmable filter coefficients. At **454**, the input signal is amplified by a programmable gain amplifier according to the gain value of the amplifier. The amplifier can include one or more gain stages, each of which may have a programmable gain.

At **456**, the filtered and amplified signal is converted to a corresponding digital signal. For instance, the conversion can be implemented by a ΣΔ analog-to-digital converter to provide a high resolution digital output. At **458**, the digital output can be processed (e.g., by a DSP) to provide an output value according to a predefined function. The function can be derived based on the transfer function determined for the channel. At **460**, the computed output value can be evaluated to ascertain what adjustments, if any, are to be made to the channel transfer function. For instance, if the bit-length of the computed output value exceeds a predefined number of bits, the gain can be increased. If the bit-length is less than a minimum bit-length, the gain may be increased. The computed output value can also be analyzed relative to predetermined data (e.g., in a look-up table in memory of the CDC) to determine changes to filter coefficients. At **462**, the transfer function can be updated based on the analysis at **460**.

From **460**, the method can return to **452** to continue the process such that the transfer function can be dynamically adjusted, such as to maintain a maximum dynamic range for circuitry associated with the input channel. It will be appreciated that, during normal operation, the process may repeat periodically at a predefined timing interval. Alternatively, the CDC may routinely monitor parameters and trigger adjustments when such parameters are outside of expected operating parameters.

Although the innovation has been shown and described with respect to certain examples and embodiments, it will be appreciated that equivalent alterations and modifications will occur to others skilled in the art upon reading and understanding this description and drawings. Accordingly, the invention is intended to embrace all such alterations, modifications and variations that fall within the scope of the appended claims. In particular regard to the various functions performed by the above described components (assemblies, devices, circuits, systems, etc.), the terms (including a reference to a "means") used to describe such components are intended to correspond, unless otherwise indicated, to any component which performs the specified function of the described component (e.g., that is functionally equivalent), even though not structurally equivalent to the disclosed structure, which performs the function in the herein illustrated exemplary aspects of the innovation. Furthermore, to the extent that the terms "includes", "including", "has", "having", and variants thereof are used in either the detailed description or the claims, these terms are intended to be inclusive in a manner similar to the term "comprising." In the claims, unless otherwise indicated, the article "a" is to refer to "one or more than one."

What is claimed is:

1. A modular apparatus for acquiring biometric data, the modular apparatus comprising:

circuitry operative to receive an input signal at an input corresponding to the biometric data, the circuitry comprising at least one filter and an amplifier, the circuitry being configured to process the input signal according to an aggregate transfer function thereof and to provide a corresponding processed input signal, the biometric data being indicative of at least one of (i) biological or biomedical information of a patient acquired from one or more physiological sensors, (ii) feedback information associated with a delivery of a therapy to the patient (iii) status information for the one or more physiological sensors, or (iv) operating parameters associated with equipment used to deliver the therapy to the patient;

a controller configured to provide at least one control signal to the circuitry to programmatically modify the transfer function of the modular system by setting (i) at least one filter coefficient of the at least one filter and (ii) a gain of the amplifier to facilitate acquisition of the biometric data; and

a register configured for storing a digital representation of the corresponding processed signal in a predetermined number of bits assigned to store the biometric data acquired by the circuitry, the controller being configured to set the at least one filter coefficient and the gain of the aggregate transfer function so that the register accommodates a maximum dynamic range of the circuitry by fitting the biometric data in the predetermined number of bits.

2. The apparatus of claim **1**, wherein the input circuitry comprises at least one amplifier, the at least one amplifier having a programmable gain that is dynamically adjusted by the control signal to amplify the input signal and thereby acquire the biometric data with maximum resolution.

3. The apparatus of claim **1**, wherein at least one overflow bit of the register indicates that the dynamic range exceeds a size of another portion of the register, the apparatus further comprising a dynamic range control that adjusts a gain value

based on the at least one overflow bit of the register, the controller providing the control signal according to the gain value.

4. The apparatus of claim **1**, further comprising a signal processor that computes a sensor signal value for the digital representation of the corresponding processed signal by applying a predefined function to a representation of the corresponding sensor signal.

5. The apparatus of claim **4**, the controller setting a gain of at least a portion of the circuitry so that the sensor signal value is accommodated in the register with a maximum resolution defined by the dynamic range of the circuitry.

6. The apparatus of claim **1**, wherein the circuitry comprises a plurality of analog circuits, each having a component transfer function that forms part of an aggregate channel transfer function for a given channel of the modular apparatus, the component transfer function of at least one of the plurality of analog circuits for the given channel being adjusted based on the at least one control signal.

7. The apparatus of claim **6**, wherein at least one of the plurality of analog circuits further comprises a programmable gain amplifier that amplifies the sensor signal according to gain setting of the respective programmable gain amplifier, the controller providing a gain control signal to set the gain setting of the respective programmable gain amplifier and thereby change the channel transfer function.

8. The apparatus of claim **7**, wherein at least one of the plurality of analog circuits further comprises at least one analog filter for filtering the sensor signal according to filter coefficients of the filter, the controller providing a filter control signal to set the filter coefficients of the filter and thereby change the channel transfer function.

9. The apparatus of claim **1**, further comprising modality specific circuitry configured for collecting and storing biometric data, corresponding to the input signal, at a predetermined acquisition rate that is set according to a type of the biometric data, the input circuitry being part of the modality specific circuit and being responsive to the at least one control signal.

10. A modular apparatus for acquiring biometric data, the modular apparatus comprising:

circuitry operative to receive an input signal, the circuitry being configured to process the input signal according to a transfer function thereof and to provide a corresponding processed input signal;

a controller configured to provide at least one control signal to the circuitry to programmatically modify the transfer function of the modular system to facilitate acquisition of the biometric data, the biometric data being indicative of at least one of (i) biological or biomedical information of a patient acquired from one or more physiological sensors, (ii) feedback information associated with a delivery of a therapy to the patient (iii) status information for the one or more physiological sensors or (iv) operating parameters associated with equipment used to deliver the therapy to the patient; and

a plurality of channels, each channel having circuitry for receiving and processing a respective input signal, the controller selectively adjusting more than a gain setting of a channel transfer function associated with the circuitry of each respective channel of the plurality of channels to maximize the dynamic range of each respective channel according to a predetermined portion of addressable memory space assigned to each respective channel.

11. The system of claim **10**, wherein each of the plurality of channels has a sample rate that is individually configurable by the controller.

12. A modular system for acquiring biometric data comprising:

means for amplifying an input signal received at an input to provide an amplified signal;

means for filtering the input signal to provide a filtered signal;

means for processing the amplified and filtered signal to provide a computed value corresponding to the biometric data, the biometric data being indicative of at least one of (i) biological or biomedical information of a patient acquired from one or more physiological sensors, (ii) feedback information associated with a delivery of a therapy to the patient (iii) status information for the one or more physiological sensors or (iv) operating parameters associated with equipment used to deliver the therapy to the patient;

means for controlling a transfer function of at least the means for amplifying and the

means for filtering based on the computed value; and

means for storing a digital representation of the computed value in a predetermined amount of memory space, the means for controlling adjusts the transfer function for accommodation of the digital representation of the computed value in the means for storing to achieve a maximum dynamic range for the modular system.

13. The system of claim **12**, wherein the means for controlling adjusts a gain value of the means for amplifying based on a word size of the computed value relative to available space in the means for storing.

14. The apparatus of claim **12**, wherein the means for processing further comprises means for applying a predefined function to a representation of the corresponding input signal to provide the computed value.

15. The apparatus of claim **12**, further comprising a plurality of input channels, each of the plurality of input channels comprising means for amplifying a corresponding input signal, each of the plurality of input channels having a respective channel transfer function that is adjustable by the means for controlling.

16. The system of claim **15**, wherein each of the plurality of channels comprises other circuitry having a respective transfer function that, in conjunction with a transfer function component of the means for amplifying, defines the channel transfer function.

17. The system of claim **16**, wherein each of the plurality of input channels further comprises means for filtering the input signal for the respective channel, which contributes to the channel transfer function according to the filtering, and the filtering performed by the means for filtering for each of the plurality of channels being controlled by the means for controlling.

* * * * *