International Journal of Automobile Engineering
Research and Development (IJAuERD)
ISSN(P): 2277-4785; ISSN(E): 2278–9413
Vol. 4, Issue 1, Feb 2014, 11-22

INCREASING STIFFNESS OF DIAPHRAGM-SPRING FINGERS AS A PART OF SYSTEM APPROACH IMPROVEMENT OF FRICTION CLUTCH FUNCTION

DARKO DANEV[1], MILAN KJOSEVSKI[2] & SIMEON SIMEONOV[3]

[1,2]Ss. Cyril and Methodius University in Skopje, Faculty of Mechanical Engineering Skopje, Macedonia

[3]Goce Delcev University Stip, Faculty of Mechanical Engineering, Štip, Macedonia

ABSTRACT

In contemporary vehicles, friction clutches are exposed to increased engine performances, i.e. increased torque, particularly for vehicles equipped with diesel engines. Demands for low mass and low moments of inertia of the moving parts are more pronounced. Towards the aim of meeting those demands, there is a tendency for manufacturing of clutch covers by drawing from a thin tin sheet metal, thus decreasing their axial stiffness, and increasing the path of the release bearing. Such a situation in conditions of increasing vehicle speed endangers the fast and precise work and functionality of the friction clutch. Concomitantly, the effort and the work that the driver needs to make and do during its clutch release increase. These factors need to be within certain limits.

This paper provides an analysis of a possible response to this kind of challenges. The focus is pertinent to the analytical and experimental analysis of the capacity to decrease backlash in the process of release of the clutch with an inexpensive technological procedure for profiling the fingers of the diaphragm-spring as a way to increase their stiffness. The impact of the analyzed interventions on the dynamic durability of the diaphragm-spring is also assessed through an adequate experiment.

KEYWORDS: Friction Pad, Diaphragm-Spring, Stiffness of the Fingers, Process of Engagement

INTRODUCTION

Internal combustion engines have had a significant development in the past 10-15 years, expressed mainly through the increase of the torque at the same volume of the engine, of over 100 [%]. This trend still continues. As a result, the friction clutches should respond to the large developmental challenges rapidly and effectively, with small efforts and little energy needed from the driver to transfer the torque. In the implementation of such a mission it is necessary to have a systematic approach and use the resources of each of the elements of the clutch [1]. The work needed to be carried out for release of the clutch has its structure, and the elasticity of each of the elements has an important place. On the other hand, separate changes in the construction of the clutch, such as introduction of a clutch cover made of tin sheet metal, may increase its elasticity and deformation [3]. In the literature, [1] the need for a systematic approach in the optimization of the backlash in the system for disengagement of the clutch is elaborated, as well as the possible resolutions in some segments. Nevertheless, there is no quantitative analysis for the benefit of some relatively simple and not-so-expensive technological interventions that may decrease unnecessary backlash and work for their accomplishment. Such is the example of the possibility of increase of the stiffness of the diaphragm-spring fingers.

On the other hand, every change in the stiffness of the separate parts of a certain structure implies the question of the stress of the material and dynamic durability. Although in the literature there are plenty of papers with contents of this type, ([1], [2], and [4]), in each specific intervention or problem a separate analysis pertinent to this issue is necessary.

Depending on the stiffness of the diaphragm-spring fingers, the stiffness of the clutch cover, and the parallelism of the fingers where they are in contact with the throw-out bearing, the total deflection f of the elements in the process of disengagement of the clutch may be determined [4].The influence of the stiffness of the diaphragm-spring fingers in the process of disengagement of the clutch is the sole aspect that will be presented in this paper.

Disengagement of the clutch is done according to the following process:

In the beginning of the process of disengagement of the clutch by moving the release bearing, the value of mutual non-parallelism of fingers f_p is annulated, as well as the deflection of the elasticity of the basket f_{kk} (Figure 1), and the pressure plate detaching will start when the fingers - depending of their stiffness - will be deformed for deflection f_e or when: $f=f_p+f_{kk}+f_e$..

During the process of disengagement (or engagement) of the clutch, the process of sliding occurs.

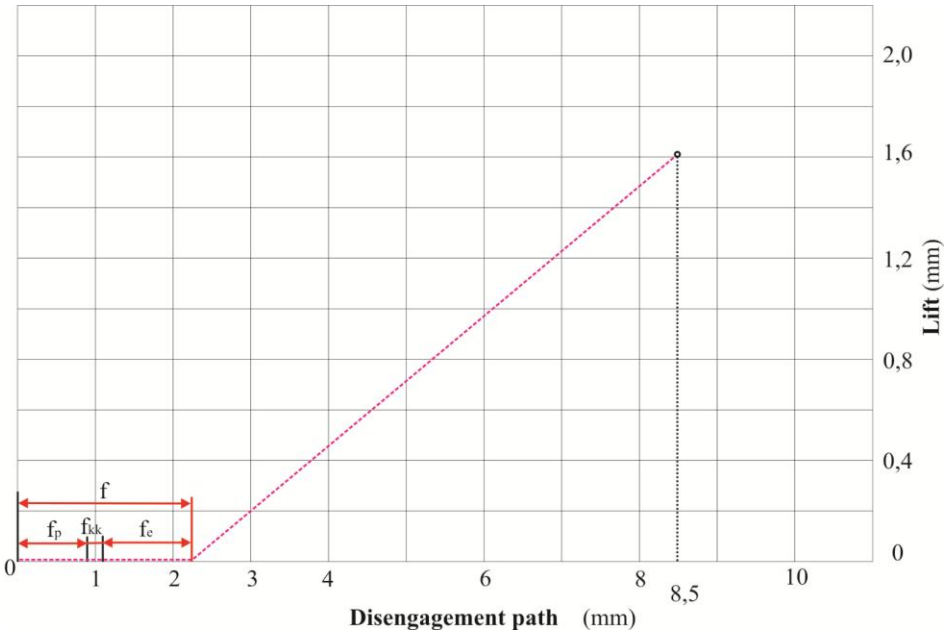

Figure 1: Correlation between the Disengagement Path of Diaphragm-Spring Fingers and Lift of the Pressure Plate for Diaphragm-Spring with Fingers without Embossed Figure

AIM AND OBJECTIVES OF THE RESEARCH

The aim of the research presented in this paper is to determine the possibility of decreasing finger backlash that may be achieved by profiling of the fingers of the diaphragm-spring (by transformation of the finger with cross-section according to Figure 2a in a finger with cross-section with increased stiffness according to the Figure 2b). In order to avoid the possible adverse influences induced by the change, a research was made to determine the possible endanger pertinent to dynamic breakdown.

Combined analytical-experimental method for determination of deflections was used in the research, as well as a reliable experimental method pertinent to dynamic durability.

For the purpose of this research, clutch intended for use in passenger car Renault Megane was used. This clutch is intended to fit in vehicles equipped with diesel engine 1, 9 [ccm] with power of (P=250[hp]@4000[min^{-1}]), and in vehicles with gasoline engines 1,5 [ccm] with power of (P=150[hp]@6000 [min^{-1}]).

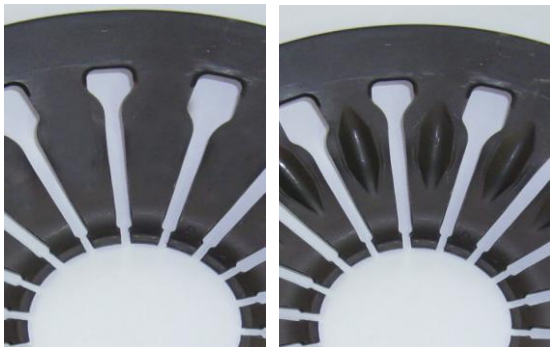

a **b**

Figure 2: Diaphragm-Spring: A) Without an Embossed Figure on the Spring Fingers, B) with an Embossed Figure on the Spring Fingers

METHODOLOGY OF RESEARCH

The research starts with analysis of the available knowledge in this area, based on the diaphragm-springs and clutch manufacturers' experience, and academic and professional literature, continues with the analysis of the obtained results, and finishes with conclusions. The research comprises:

- Strength analysis of change of stiffness depending of the deflection of the fingers;
- Experimental determination of diaphragm-spring stiffness;
- Dynamic fatigue of the diaphragm-spring as a part of the clutch;

RESEARCH

Spring fingers (Figure 2a) are usually manufactured with a constant thickness, or their cross-section is a rectangle with one variable dimension, which is the width of the rectangle section (Figure 3). In certain cases, the finger stiffness needs to be increased, in order to decrease the disengagement path of the clutch. One of the ways to increase fingers stiffness is to emboss the certain form into a finger (approximately an ellipse with a certain depth). (Figure 2b, Figure 4) Stiffness of the finger with a rectangle cross-section and the stiffness of the finger of with an embossed figure will be analyzed in the further text.

Deflection in separate points will be determined according to the following equations used for deflection and slope determination:

$$f_i = f_{i-1} + \frac{F(Z_i - Z_{i-1})^3}{3EI_{xi}} + \frac{M_i(Z_i - Z_{i-1})^2}{2EI_{xi}} + \varphi_{i-1}(Z_i - Z_{i-1})$$

$$\varphi_i = \varphi_{i-1} + \frac{F(Z_i - Z_{i-1})^2}{2EI_{xi}} + \frac{M_i(Z_i - Z_{i-1})}{EI_{xi}}$$

E [MPa] - elasticity module of the diaphragm-spring;

F [N] - force that acts upon diaphragm-spring;

I_{xi} [mm^4] - moment of inertia on i cross-section at the spring finger;

Z_i [mm] - distance from the root of the finger to i section (Figure 4);

ℓ [mm] - finger length;

M_i [Nmm] - moment of bending into the i-intersection

3.1. Baseline Data for Calculation of the Deflection

Determination of cross-section area and moments of inertia at the characteristic sections

Moment of inertia for a rectangle cross-section:

Moment of inertia Z_i (Z_i= 0; 2; 4; 6; 11; 16; 18; 21; 24; 26; 31; 36; 41,5; 46,5; 49,5; 54,6) is:

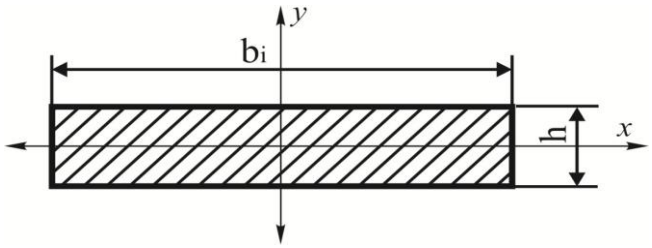

Figure 3: Diaphragm-Spring Finger Cross-Section for Finger without an Embossed Figure

$$I_{xi} = \frac{b_i h^3}{12}$$

I_{xi} [mm^4] – moment of inertia into the i-intersection for the finger without an embossed figure;

Moment of inertia for the zone of cross-sections where the figure is engraved (Z_i= 0; 2; 4; 6; 11; 16; 18; 21; 24; 26; 31; 36; 41,5; 46,5; 49,5; 54,6) according to Figure 4, where changes of b_i and h were neglected, is calculated according to the expression:

$$I_{xi} = \frac{b_i \cdot h^3}{12} + A_i \cdot c^2$$

α_1=53[°] α_2=26, 5[°] α_1'=106[°] R_1=4, 5[mm] r_1=2[mm] R_2=4, 25[mm]

r_2=1, 75[mm] c=3[mm] h=2, 5[mm]

b_e = 10 [mm] c=2,6 [mm]

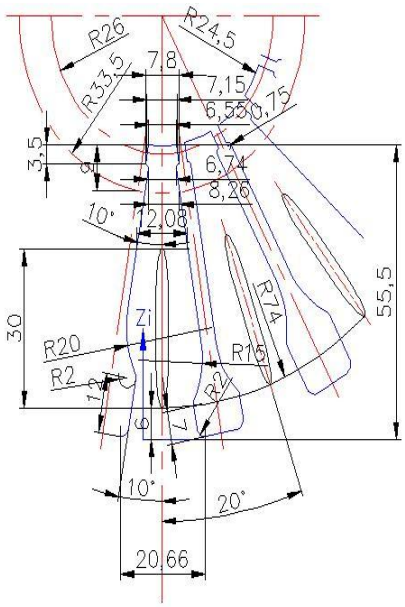

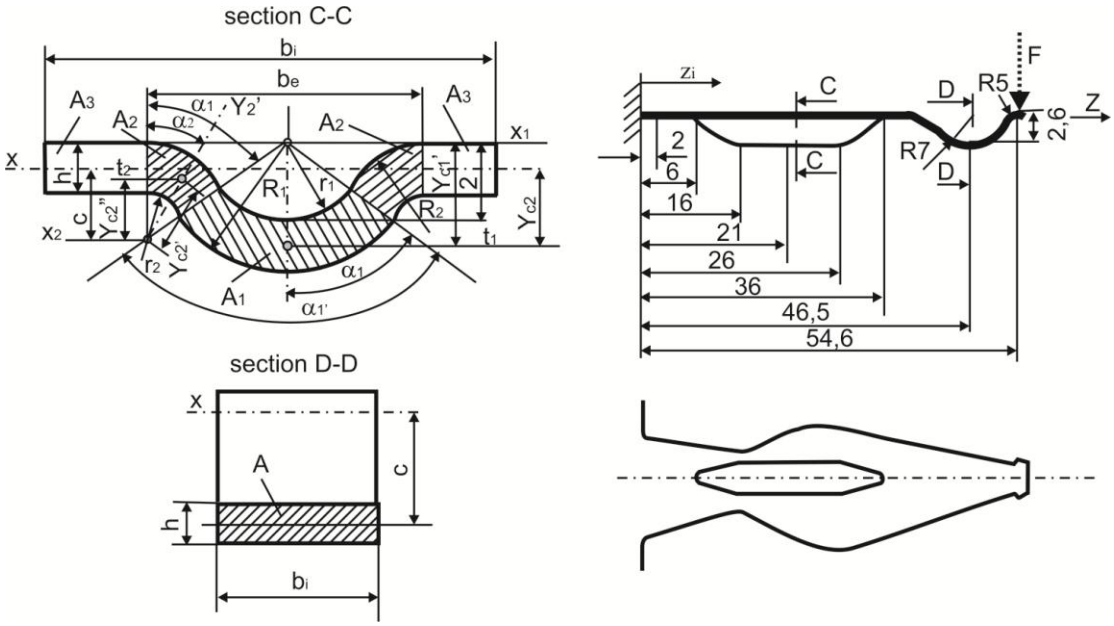

Figure 4: Diaphragm-Spring Finger and its Cross-Section with an Embossed Figure

Disengagement force of the clutch diaphragm-spring is determined by the ratio of the pressure force and the ratio of the supporting spring points. (Figure 5)

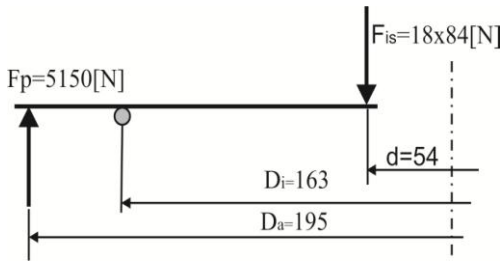

Figure 5: Sketch for Determination of Correlation between Lift and Disengagement Path

Fp = 5150 [N]-pressure force

$$F_p \frac{D_a - D_i}{2} = F_{is} \frac{D_i - d}{2}$$

$$F_{is} = 1512 \quad [N]$$

The force that acts on one limb of the spring is:

$$F = F_{is} / n \qquad F = 84 \quad [N]$$

n=18 - number of limbs;

On the basis of the implemented analysis, the value of the release force which acts upon one finger from the throw out bearing equals F=84 [N].

3.2 Calculation of the Fingers Deflection

Calculations of the finger's deflection were made by the use of:

- The analytical method of calculation, with discretization in 15 points;
- The method of finite elements analysis by use of simulation with large displacement in Solid Works.

3.2.1 Analytical Calculation of the Deflection

3.2.1.1 Calculation of the Deflection of the Fingers without an Embossed Figure

Intersection of the fingers is at a consistent height, while the width is changeable. Strength is reduced at the intersection 1-1, and at this intersection the acting force is F, and the moment is M_1 (Figure 6). The deflection at the intersection 1-1 represents a sum of the deflection of the force and deflection and the deflection of the moment. At intersection 2-2 the deflection is the sum of intersection 1-1, the deflection from the moment and from the force at intersection 2-2 and from the deflection that is a result of the slope at intersection 1-1, multiplied by the distance between the two intersections (Z_2-Z_1). The deflection of all the other intersections up until the penultimate intersection is determined through the same manner as the deflection in intersection 2-2.

The deflection in the last intersection (the final point where the force has act) is determined as the sum of the deflection in the penultimate intersection, the deflection of force in the final intersection (where Z_i = l) and the deflection as result of the slope from the previous to last intersection and the distance between the two intersections (the last and the penultimate Z_{15}-Z_{14}). The calculation of the slope in the individual intersections is conduction in the following procedure. The slope in intersection 1-1 is determined as the sum of the slope from the force and the slope from the moment. In intersection 2-2 the slope is obtained as the sum of the slope in the intersection 1-1 and the slope from the force and from the moment at intersection 2-2. Using this approach, we can determine the slope until the penultimate intersection.

3.2.1.2 Calculation of the Deflection of the Fingers with an Embossed Figure

Intersection of the fingers has a changeable width and height (at the location where the embossed figure is found). At intersects where the figure is embossed the moments of inertia are much larger than the moments of inertia when the heights is constant. The difference between the moments of inertia attribute to a heightened stiffness of the fingers of the diaphragm-spring. On the basis of the above-mentioned in relation to the specific adaption of the fingers with the embossed figure, the following calculation was executed:

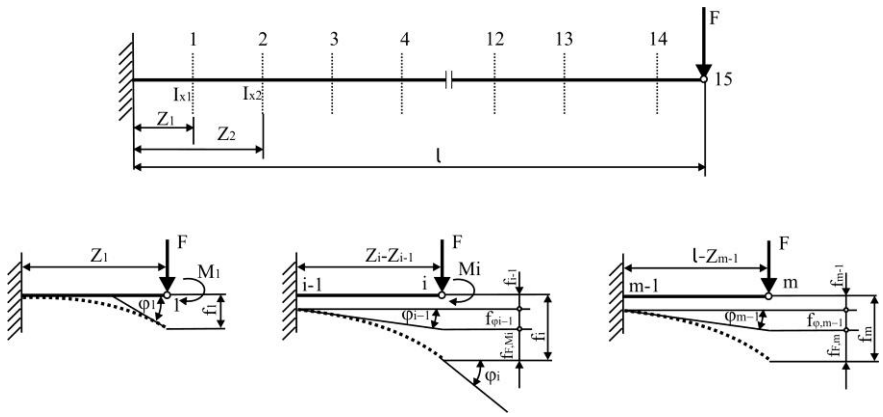

Figure 6: Scheme for Calculating the Slope and Deflection of Diaphragm-Spring Finger

f_1, [mm] – deflection in intersection 1;

$f\varphi$ [mm] - deflection from the slope in (i-1) intersection;

$f_{F,M}$ [mm] - deflection of the force and the moment in the i intersection;

φ_1 [rad-] – slope in intersection 1;

f_i [mm] - deflection in i intersection;

f_{ik} [mm] – deflection in i intersection for a profile of the finger with an embossed figure

φ_i [rad] – slope in i intersection;

f_e [mm] – deflection at the end of the finger

Zi [mm] - distance from the beginning to the end of the finger to the characteristic intersection;

F [N] – force that has an effect in the finger;

ℓ [mm] - length of the finger;

E [MPa] – module of the elasticity of the finger;

$$f_1 = \frac{FZ_1^3}{3EI_{x1}} + \frac{M_1 Z_1^2}{2EI_{x1}} = \frac{FZ_1^3}{3EI_{x1}} + \frac{F(\ell - Z_1)Z_1^2}{2EI_{x1}}$$
$$= \frac{FZ_1^2}{6EI_x 1}(3\ell - Z_1)$$

$$f_2 = f_1 + \frac{F(Z_2 - Z_1)^2}{6EI_{x2}}(3\ell - 2Z_1 - Z_2)$$
$$+ \varphi_1(Z_2 - Z_1)$$

$$f_i = f_{i-1} + \frac{F(Z_i - Z_{i-1})^2}{6EI_{xi}}(3\ell - 2Z_{i-1} - Z_i);$$
$$+ \varphi_{i-1}(Z_i - Z_{i-1})$$

i=2, 3, 4….., m-1;

m-end point (m=15), where the force has an effect;

$$f_m = f_{m-1} + \frac{F(\ell - Z_{m-1})^3}{3EI_{xm}} + \varphi_{m-1}(\ell - Z_{m-1})$$

$$\varphi_1 = \frac{FZ_1^2}{2EI_{x1}} + \frac{M_1 Z_1}{EI_{x1}} = \frac{FZ_1}{2EI_{x1}}(2\ell - Z_1)$$

$$\varphi_2 = \varphi_1 + \frac{F(Z_2 - Z_1)}{2EI_{x2}}(2\ell - Z_2 - Z_1)$$

$$\varphi_i = \varphi_{i-1} + \frac{F(Z_i - Z_{i-1})}{2EI_{xi}}(2\ell - Z_i - Z_{i-1}),$$

Values of the moment of inertia and the deflection for characteristic sections for applied force at the end of the single finger F=84 [N] are given in Table 1, according to Figure 4. These (f_i, f_{ik}) are the elastic deformations of the fingers of the spring before the pressure plate is raised.

Through inserting the distinctive points of deflection (calculated and given in Table 1) into the computer program EXCEL, the function of the change of the deflection depending on the distance is received. The deflection dependency of the finger without an embossed figure is given in Figure 7, while for the finger with embossed figure within Figure 8.

Table 1

Z_i [mm]	0	2	4	6	11	16	18	21
bi (Zi) [mm]	20,6	16,6	15,2	14,68	15,2	17,14	17,2	17
Ix [mm^4]	26,82	21,61	19,79	19,11	19,79	22,31	22,4	22,13
Ixk [mm^4]	26,82	21,61	19,79	19,11	26,35	68,45	68,35	68,14
fi [mm]		0,0021	0,0085	0,0192	0,064	0,1305	0,1624	0,2153
fik [mm]		0,0021	0,0085	0,0192	0,0608	0,1147	0,1379	0,11745
Z_i [mm]	24	26	31	36	41,5	46,5	49,5	54,6
bi (Zi) [mm]	15,9	15,35	13,5	12	9,9	8,26	7,1	7,43
Ix [mm^4]	20,07	21,29	17,58	15,625	37,64	150,35	82,4	9,67
Ixk [mm^4]	66,74	66,02	24,14	15,625	37,64	150,35	82,39	9,67
fi [mm]	0,2742	0,3167	0,4338	0,5657	0,7231	0,8653	0,9521	1,1=f_e
fik [mm]	0,213	0,2395	3127	0,399	0,504	0,6022	0,6615	0,763= f_{ek}

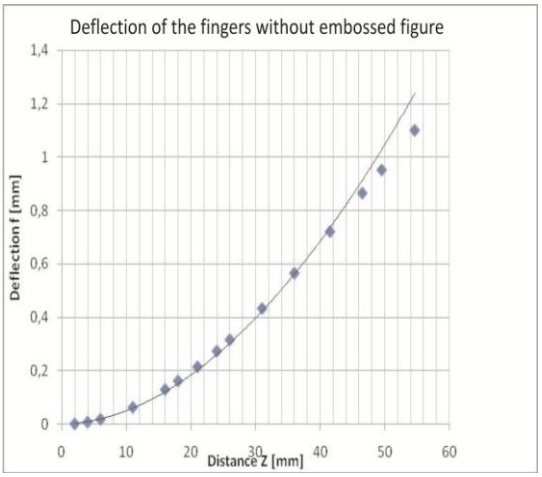

$f=0,00063Z^{1,8957}$

Figure 7: Estimate Value (Characteristic Sections)-*f_t [mm]*- Theoretical Deflection of the Finger without an Embossed Figure

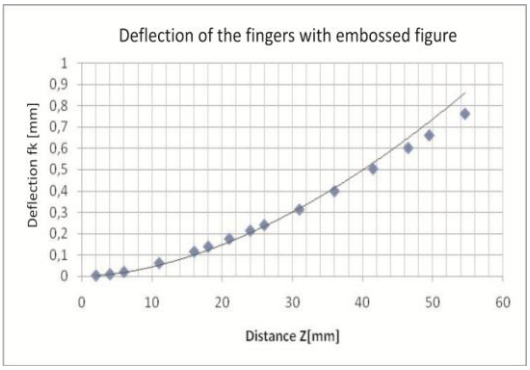

$fk=0,00077Z^{1,7547}$

Figure 8: Estimate Value (Characteristic Sections)-*f_{tk} [mm]*- Theoretical Deflection of the Finger with an Embossed Figure

3.2.2 Calculation of Deflections by the use of the Method of Finite Elements Analysis with the Simulation of Large Displacement in Solid Works

Values for deflection change were obtained on the basis of the modelling of fingers of the diaphragm-spring without stiffening (without embossed figure) (Figure 9) and the spring with stiffening (with embossed figure) (Figure 10). These values refer to the moment when the spring is disengaged, and when the force of the finger equal to 84 [N] is acting

on the limb l=54,6 [mm].

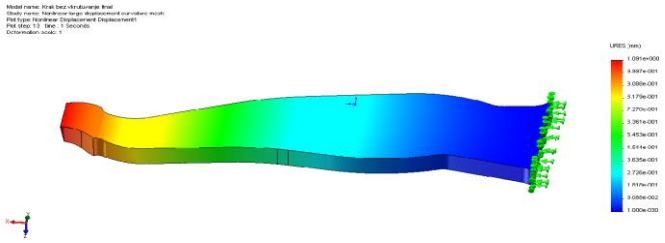

Figure 9: Change of Deflection of the Finger without Embossed Figure

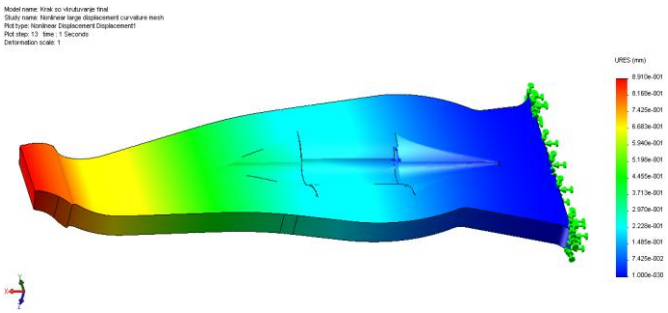

Figure 10: Change of Deflection of the Finger with Embossed Figure

Values shown in Figure 9 and 10 mean that the values of deflection at the end of the finger where the force acts are: f_e = 1,091 [mm], and f_{ek}=0,891 [mm].

3.2.3 Comparison Results Obtained by Calculations

On the basis of the analytical calculations stated in point 3.2.1 and the calculations on the basis of finite elements analysis stated in point 3.2.2, comparisons of results are shown in Table 2.

Table 2

Method of Calculation	Calculated Values		
	f_e (mm)	f_{ek} (mm)	f_e/f_{ek} (%)
Point 3.2.1	1,1	0,763	44
Point 3.2.2	1,091	0,891	22,4
Difference	0,82 %	16,77 %	

This table shows that there is a significant difference between the result values for spring with fingers with embossed figure and its value is 16,77[%]. This is due to imprecision in determination of the sector values of the moment of inertia for cross-section of a finger with embossed figure. By use of finite element method analysis with large deformations, the influence of the moment of inertia is continuous (not in sectors) by the whole length of finger. According to this as relevant results for comparison between theoretical and real experimental results, the results obtained by FEA are considered.

3.3. Measurement of the Deflection

3.3.1 Method of Measurement

Measurements were made using measuring device FOURRAY f/n 2.724.801 (Figure 11), for the values of f_p or f_{kk} and f or f_k.

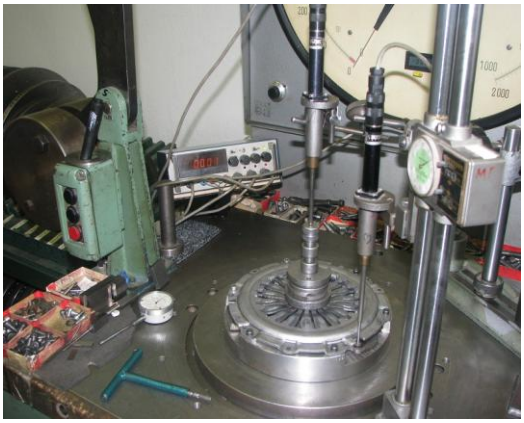

Figure 11: Measuring Device FOURRAY F/N 2.724.801, for Measuring the Values of f_p or f_{kk} and f or f_k

Ten complete clutches with diaphragm-springs with square cross-section of the fingers according to the Figure 2a and Figure 3 and ten complete clutches with diaphragm-springs with an embossed figure in the finger Figure 2b and Figure 4 were measured.

In order to simplify the data processing of the experimental measurements, a choice of diaphragm-springs that have the same quantities of non-parallelism at the ends of the fingers f_p=f_{pk}=0, 87 [mm] has been made. For the same reason, all measurements have been made with the same basket, so that the deflection of the basket is f_{kk}=0, 22 [mm].

3.3.2 Results from the Static Measurement

According to measurements made during the experiment, the middle value of finger deflection f_e and f_{ek}, at the end of the finger before the rising of pressure plate is started are:

f_e = 1,14 [mm] for a spring without an embossed figure on the fingers;

f_{ek} = 0,88 [mm] for a spring with an embossed figure on the fingers.

From this, it can be seen that the spring which has an embossed figure on the fingers has a larger stiffness when compared to the spring without an embossed figure on the fingers by 22, 54 [%].

For the specific measurements, the total amount of non-parallelism of the fingers f_p, the deflection of the basket f_{kk}, and of the deformation of the finger f_e i.e. f_{ek} amounts to:

f=2, 23 [mm] for a spring without an embossed figure on the fingers;

f_k =1,97 [mm] for a spring with an embossed figure on the fingers.

Accordingly, it can be concluded that the raising of the disk of the clutch with a spring that has an embossed figure on the fingers will be done 13, 19[%] faster than the spring without an embossed figure on the fingers.

The diagram from Figure12 shows the results from measurement of a single sample. This Diagram shows that if the diaphragm-spring fingers are more elastic, disengagement of the clutch will start later, after deflection f, or f_k for a spring with stiffer fingers is surmounted. This contributes directly to acquiring differences in the values between the beginnings of the disengagement (f-f_k), respectively the value z_t (Figure 9) which contains additional deformity of the clutch cover due to increased release force in the fingers. Value S from Figure2 shows the difference of the values of deflection between fingers with different stiffness for the same traveling of the pressure bearing.

It can be concluded that if elastic deformations of the diaphragm-spring fingers are smaller, the time needed for

engagement (disengagement) of the clutch is shorter.

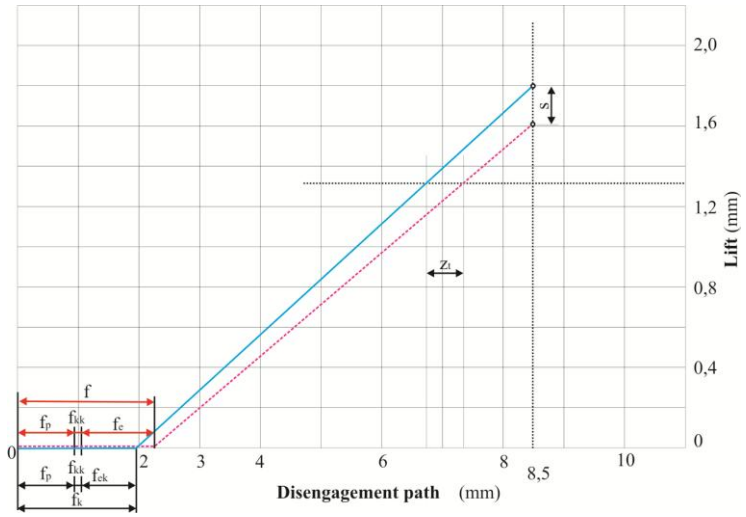

Figure 12: Correlation Between the Disengagement Path of Diaphragm-Spring Fingers and the Lift of the Pressure Plate for Diaphragm-Spring with Fingers without (Red Dotted Line) Embossed Figure and with Embossed Figure (Blue Solid Line)

3.3.3 Comparison of the Results of the Theoretical and Experimental Measurements

On the basis of values f_e and f_{ek} obtained by the calculations stated in point 3.2.2 and by the measurement according to point 3.3.2 in Table 3, the following relations are shown:

Table 3

Method	Values	
	f_e [mm]	f_{ek} [mm]
FEMA (3.2.2)	1,091	0,891
Experimental (3.3.2)	1,14	0,88
Difference	4,49 %	1,25 %

3.4 Dynamic Fatigue of Diaphragm-Spring

Ten springs with increased stiffness of fingers are tested (in a clutch) with testing equipment for dynamic fatigue without rotation with number of changes 10^6 (results are shown on Table 4). After the testing there is no substantial change of the starting values.

Table 4

Values	Sample	Average
Before Fatigue	Lifting [mm]	1,73-1,85
	Pressure force [N]	5310
After Fatigue	Lifting [mm]	1,60-1,71
	Pressure force [N]	4890

Decrease in the pressure force and lifting occurs as a consequence of friction in places where the basket and the spring bond. In practice, these deflections of the force are within the limits of 5-10 %, and for lifting - 6-12 %. The value of deflection depends on the hardness of the spring (42 up to 46 HRc), on the quality of manufacture of the parts and their instalment.

4. ANALYSIS OF RESULTS AND CONCLUSIONS

On the basis of the analysis and the examinations, the following may be concluded:

According to the experimental measurements (Table 3) the deflection of the endpoint for a finger with rectangular cross-section is 29, 5 % larger than the deflection of the endpoint for a finger with increased stiffness.

At the same value of the stiffness of the basket (f_{kk}) and non-parallelism of the fingers (f_p), the spring with a rectangular cross-section of the finger starts to act on the lifting of the pressure plate for 13,19% later, compared to the spring with increased stiffness of the fingers.

The diagram in Figure 12 shows that for the same value of the disengagement path of the pressure bearing, the spring with increased stiffness of fingers is lifted more for a value S or 11,8% compared to the spring with a rectangular cross-section of the fingers. This conclusion may be used to decrease the risk of contact with the metallic elements, and may be used to compensate for axial elasticity of the basket, or at increased non-parallelism of the fingers.

By parallel examination of both types of diaphragm-springs with fingers according to Figure 2a and Figure 3, or fingers according to Figure 2b and Figure 4, no significant mutual changes of the characteristics of the diaphragm-spring are noticed, with regards to the dynamic fatigue.

The research results show that there is a significant capacity for contribution to the diaphragm-spring fingers' stiffness which can be achieved by changing of their cross-section. This, together with the advancement of the parallelism of the fingers and the stiffness of the clutch cover will enable optimization of the total engagement or disengagement path of the clutch, directly influencing the factors that prolong its longevity.

This research methodology, based on the balanced usage of analytical modeling and experimental testing, may be used to examine different forms of the shape of the cross-section of the diaphragm-spring fingers, and their influence on the key friction clutch characteristics.

REFERENCES

1. Zink, M., Hausner, M., Welter, R., and Shead, R., 2006, “Clutch and release system”, 8th LuK SYMPOSIUM, pp. 27-45.
2. Kaya, N., 2006, “Optimal design of an automotive diaphragm-spring with high fatigue resistance”, International Journal of Vehicle Design, Vol.40, No.1/2/3, pp. 126 – 143.
3. Cvetkov, S., 2011, “Numerical and experimental methods of optimizing technological process of forming of motor vehicles friction clutch cover” (Doctoral thesis), University “Ss. Cyril and Methodius”, Skopje, Macedonia.
4. Nam, W.-H., Lee, C.-Y., Chai, Y.-S., Kwon J.-D., 2000, “Finite Element Analysis and Optimal Design of Automobile Clutch Diaphragm-Spring”, FISITA World Automotive Congress, Seoul, 2000-05-0125.