Seed Extraction 2

Extraction of pine seed by means of sun drying on elevated trays followed by tumbling

Granhof, Jens

Publication date:
1994

Document version
Publisher's PDF, also known as Version of record

Citation for published version (APA):
Granhof, J. (1994). *Seed Extraction 2: Extraction of pine seed by means of sun drying on elevated trays followed by tumbling*. Danida Forest Seed Centre. Technical Note No. 17

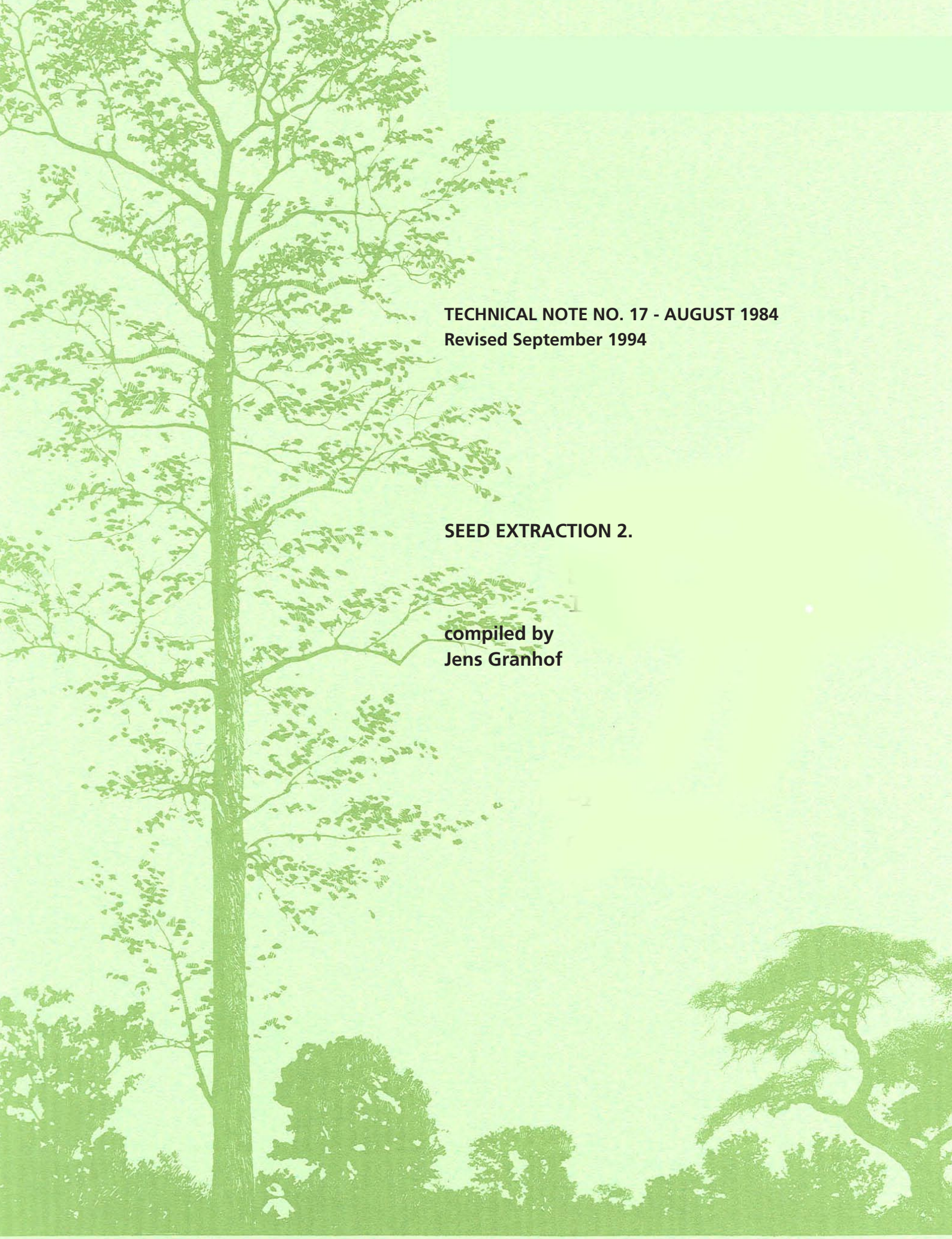

TECHNICAL NOTE NO. 17 - AUGUST 1984
Revised September 1994

SEED EXTRACTION 2.

compiled by
Jens Granhof

DANIDA FOREST SEED CENTRE

Titel
Seed extraction. 2 - Extraction of pine seed by means of sun drying on elevated trays followed by tumbling

Authors
Jens Granhof

Publisher
Danida Forest Seed Centre

Series - title and no.
Technical Note no. 17

DTP
Melita Jørgensen

Citation
Granhof, J. 1994. Seed Extraction. 2. Extraction of pine seed by means of sun drying on elevated trays followed by tumbling. Technical Note No.17.

The report is available free of charge
SL-International@kvl.dk

Electronic Version
www.SL.kvl.dk

CONTENTS

1. INTRODUCTION

At times with high energy costs any operation which can be based on »freely available energy« should deserve attention.

In the case of extraction of pine seed under tropical conditions, the most readily available free energy is sun heat.

The method described in the following is used at the Pine Improvement Centre in Thailand for the extraction of seed of *Pinus kesiya* and *P. merkusii*.

Its use is based on the coinciding of cone maturity with the driest and hottest period of the year i.e. February through April (rainfall 0.4 to 1.1 mm) with high temperatures (max. 34-39ºC), low humidity (73-65%) and only small fluctuations from day to day.

The method implies 2 steps:

(l) exposure of cones to sun-heat in elevated trays under cover, stirring by hand for release of seed.

(2) rotation of cones in rotary tumbler.

2. COLLECTION AND PRE-CURING

Collection of cones of *Pinus kesiya* takes place during the period December to March after approximately 23 months' development. By this time cones have hardened and half of the cones have changed from green to brown. The endosperm has obtained a firm consistency and will be light green.

The development of cones of *Pinus merkusii* takes 12½ months, and the collection of cones takes place in March-April in the highlands of northern Thailand, but in the lowlands of north-east Thailand it extends into June. The optimal stage for collection of *P. merkusii* cones has been found to be when the majority of cones are brownish and some have started to open.

Prior to extraction, cones are normally stored in a shed for after-ripening. Direct exposure may otherwise cause a number of cones to case-harden. Pre-curing takes place at the extraction unit of the seed centre in Chiangmai, 300 m above sea level. The cones are kept in loosely tied gunny-bags for 7-14 days. Experiments have not shown any detrimental effect on viability of seed from such storage with shade and good aeration.

3. EXTRACTION METHODS

Extraction of smaller cone-lots e.g. provenance or single-tree collections (fig.l).

The extraction unit consists of a firm wooden stand, 90 cm high and 84 cm wide (inside measure) upon which a wooden tray (84 x 60 x 15 cm inside measure) rests. Exposure of the cones takes place on the galvanised iron wire-mesh (½" x ½") bottom of each tray.

A stand usually comprises three trays to a section.

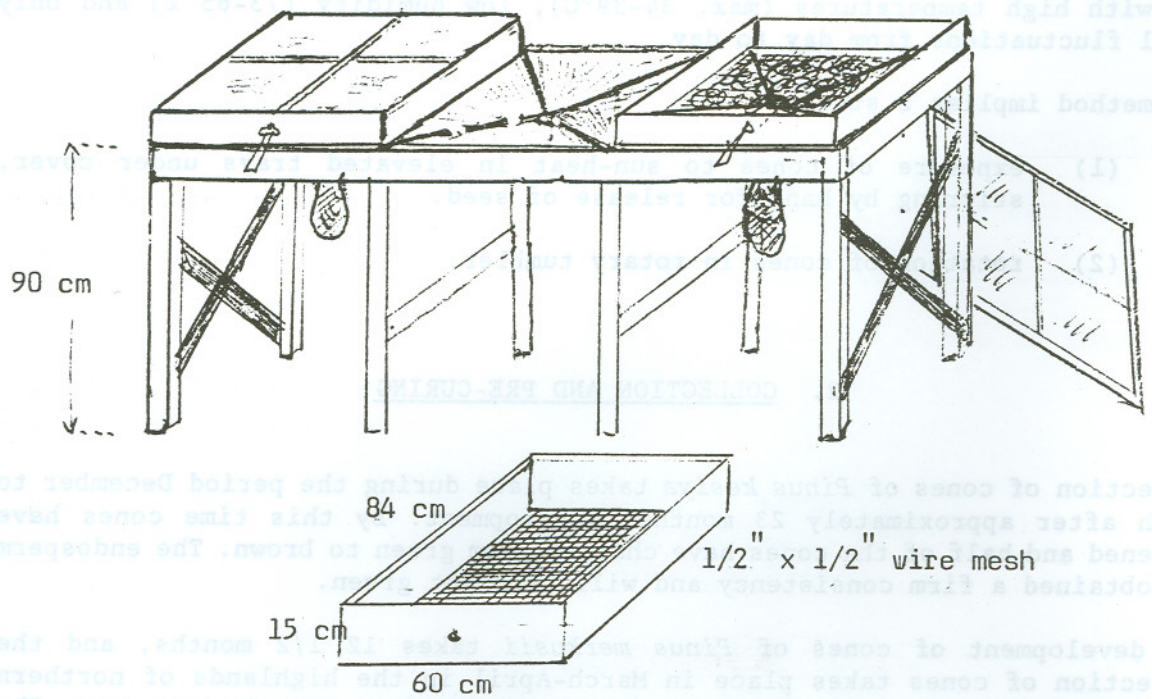

Figure 1 Extraction unit for smaller cone lots

To catch the sun heat and speed up extraction, each tray is provided with a framed clear polythene cover. These covers must remain in place also during night time to avoid dew being absorbed by the cones. For the same reason it is essential that the covers remain intact and are replaced if torn.

In principle, cones are spread in one layer only.

When the seeds are released, they drop into a four-sided rectangular funnel of galvanised zinc sheet (84 x 60 cm) placed over the stand frame underneath the tray. The funnel is 30 cm deep and has an outlet in the bottom fitted with a short (3 cm) tube with a 5 cm lumen. The funnel is provided at the short sides with a 2 cm rim on which it rests on the frame of the stand. The seed is eventually collected in a small cotton bag tied around the tube.

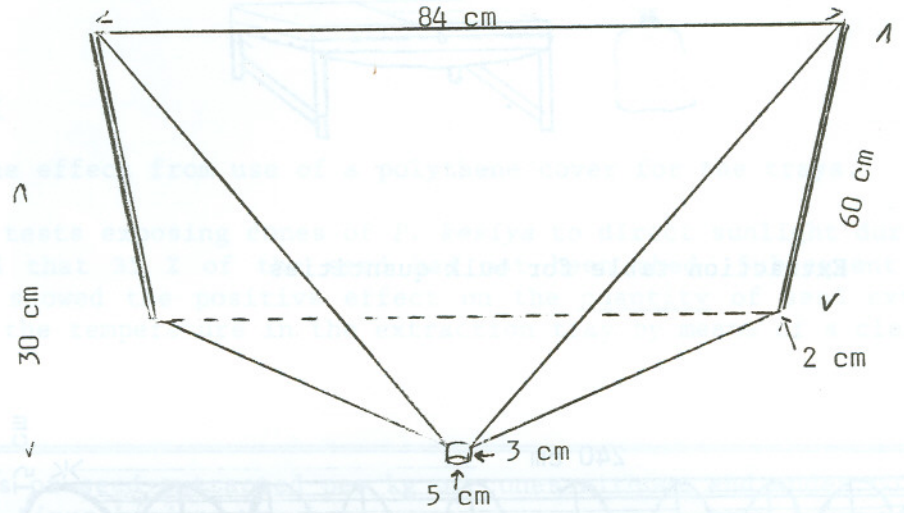

Figure 2 Funnel of galvanised zinc

After use the tables can be disassembled and trays, funnels and frames be stacked.

Extraction of bulk quantities

The extraction unit (fig. 3) consists of a single tray (150 x 150 x 15 cm). It has a ½" x ½" wire-mesh bottom resting on a stand frame 50 cm above ground level.

The released seeds are collected in coarsely woven plastic cloth suspended underneath the tray. Plastic is used for the sake of durability and the coarsely woven fabric provides aeration.

Sun heat is caught by a framed cover of clear polythene sheet.

The capacity of one tray is roughly equivalent to the contents of ½ gunny-bag (i.e. 40 kg or ¾ hl) of cones at a time.

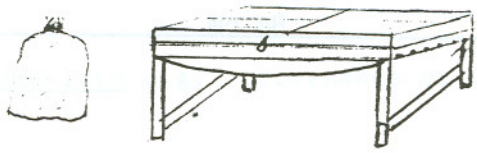

Figure 3 Extraction table for bulk quantities

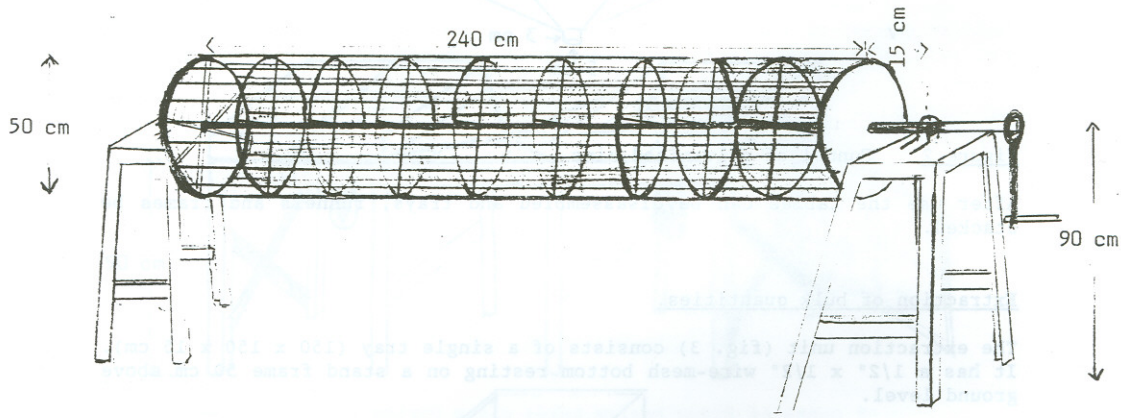

Figure 4 Rotating tumbler

The tumbler (fig. 4) was considered a means to reduce handling time of bulk quantities or speeding up extraction during periods with limited time available or without optimal weather conditions. This could be the case in particular with *P. merkusii* where cone-maturity happens at the end of the dry season or even at the onset of the rainy season when optimal extraction conditions are getting scarce.

The tumbler is a rotating drum, 50 cm in diameter, made of round (7.5 mm) iron rods placed at 10 cm intervals. The drum is 240 cm long, operated manually and rotating in roller bearings. It is covered with 1" x 1" galvanised iron mesh. The centre of the drum is 90 cm above ground level.

One quarter section of the drum is hinged and can be opened for the filling and emptying of cones. For each batch of cones the drum is a little less than half full.

A woven plastic sheet 250 x 250 cm is suspended under the drum to catch the seeds as they fall (not shown in figure).

4. EFFECT OF EXTRACTION METHOD

QUANTITY

a) The effect from use of a polythene cover for the trays.

Initial tests exposing cones of *P. kesiya* to direct sunlight during February revealed that 35 % of the seed had not been shed. Subsequent experiments clearly showed the positive effect on the quantity of seed extracted from raising the temperature in the extraction tray by means of a clear polythene cover.

Grammes of seed extracted per kg og cones without and under polythene cover. *Pinus kesiya*

Exposure	without cover (g)	with cover (g)
7 days	8.2	15.6
15 days	12.3	19.5
16 days	12.3	19.5

b) The effect of stirring and beating of cones during extraction

Cones must be stirred or beaten several times a day in order to get as many seeds extracted as possible. Repeated daily stirrings release more seeds than one major final stirring at the end of the extraction period.

c) Effect of tumbling

Initial experiments with the tumbling of *P. merkusii* cones seem to indicate that extraction time can be cut down from 6 to 3 days. 2 minutes' rotation released roughly the same amount of seed as 3 extra days' exposure to the sun, and furthermore, the seed released by rotation was of similar or even better quality (full-seed percentage).

When only 3 days' exposure to the sun is followed by tumbling, only 3 % of the total amount of viable seed is lost.

QUALITY

The quality of the seed is assessed by percentage of full seeds and the percentage of seeds capable of germinating (G %). Data from several provenance samples indicate that, at this stage, both qualities reach satisfactory levels with this method of extraction.

Viability and % of full seeds of P. kesiya provenances		
Sample Reg No.	**Full seed**	**Germination**
S 0001	71	67
0002	82	68
0003	81	73
0006	86	72
0011	79	79
0012	73	76
0029	92	93
average	80.6	75.4

The period needed for extraction is of great importance, as it determines the quantity which can be handled with available equipment.

Tests as well as general experience show that for *P. kesiya* only 6 % of the total amount of seed and only 4 % of the viable seed are lost if the time of exposure is limited to merely 5 days during the optimal time of the year.

Other drying racks for pine cones are the following two, both from U.S. Forest Service and used for *Pinus ponderosa*.

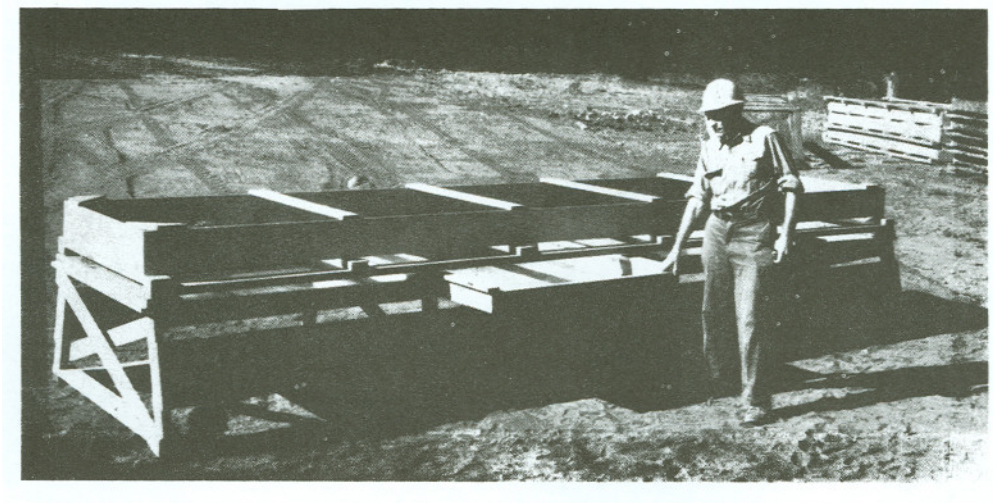

1. Pine Cone Drying Rack designed at the Tahoe National Forest

A cone tray consisting of a wooden frame (approx. 5 x 1 x 0.2 m) with a bottom of chicken wire (2.5 x 2.5 cm) is placed on a wooden stand about 70 cm above ground level. The tray holds approx. 4 sacks of cones. The released seeds fall into 4 drawers with galvanised-iron bottoms placed under the tray. The drawers are separated by 20 cm metal shields. At night time the cones are covered with canvas or builder's paper to keep off the dew. The cones will open in 3-5 days depending on ripeness. As they open, the cones are rolled around with a stick about twice a day.

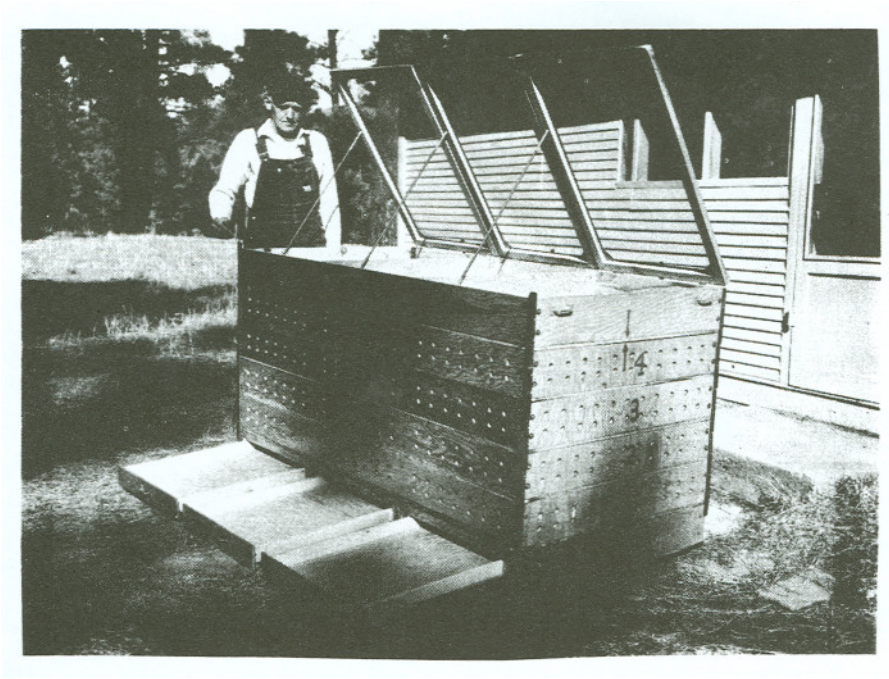

2. Improved Cone-Drying Rack developed at Fort Valley Experimental Forest

The unit consists of six plywood trays (approx. 1 x 2 x 0.15 m) which are stacked on top of each other. The bottom tray has 3 drawers that catch the seed and rockers at the ends so the cones can be agitated during drying. The other five trays hold cones. Each drying tray has a bottom of ⅜" (0.9 cm) mesh galvanised-wire screen. Holes ¾" (2 cm) covered on the inside by fine screen, were drilled on all sides of the cone trays for air circulation. Each tray has 3 separate compartments, so three different cone lots may be dried simultaneously. Each compartment holds approx. 3/4 to 1 bushel (35 litres) of green cones. Angle irons at corners hold the complete rack together. The screened lids are hinged.