View metadata, citation and similar papers at core.ac.uk

brought to you by CORE

provided by PORTO@iris (Publications Open Repository TOrino - Politecnico di Torino)

POLITECNICO DI TORINO
Repository ISTITUZIONALE

Advanced Diagnostics of Position Sensors for the Actuation Systems of High-Speed Tilting Trains

Original
Advanced Diagnostics of Position Sensors for the Actuation Systems of High-Speed Tilting Trains / JACAZIO G.; RISSO D.; SORLI M.; TOMASSINI L.. - ELETTRONICO. - (2010). ((Intervento presentato al convegno Annual Conference of the Prognostics and Health Management Society - PHM 2010 tenutosi a Portland (USA) nel October 10-16, 2010.

Availability:
This version is available at: 11583/2374746 since:

Publisher:
Prognostics and Health Management Society

Published
DOI:

Terms of use:
openAccess

This article is made available under terms and conditions as specified in the corresponding bibliographic description in the repository

Publisher copyright

(Article begins on next page)

03 August 2020

Advanced diagnostics of position sensors for the actuation systems of high-speed tilting trains

Giovanni Jacazio[1], Denise Risso[1], Massimo Sorli[1], Lorenzo Tomassini[2]

[1] *Politecnico of Turin - Department of Mechanics, 10129 Torino, Italy*
giovanni.jacazio@polito.it
denise.risso@polito.it
massimo.sorli@polito.it

[2] *Microtecnica, 10126 Torino, Italy*
ltomassini@microtecnica.net

ABSTRACT

Trains tilting permits a train to travel at a high speed while maintaining an acceptable passenger ride quality with respect to the lateral acceleration, and the consequent lateral force, received by the passengers when the train travels on a curved track at a speed in excess of the balance speed built into the curve geometry. The tilting of a train carbody is performed by a control and actuation system which operates as a closed servoloop accepting the commands from the train control system, generating the torque necessary to tilt the carbody with respect to the bogie and measuring the tilt angle to close the control loop. Measurement of the tilt angle of each train vehicle is performed by two sensors located in the front and rear part of the vehicle. Since a correct tilt angle measurement is vital for the system operation and for ensuring a safe ride, in case of discrepancy between the signals of the two tilt angle sensors of any vehicle, the tilting operation is disabled and the train speed is reduced. An innovative tilt angle sensors health management system is herein presented that makes intelligent use of all available information to allow detection of malfunctioning of an individual tilt angle sensor, thereby enabling a continued operation of the tilting system and a high speed travel after a sensor failure occurs. *

1. THE TILTING TRAINS

Tilting trains perform car body tilting towards curve's inner side, to reduce centrifugal force in curves at passengers' level and, therefore, to maintain a better or equivalent passenger comfort with respect to the lateral acceleration (and the consequent lateral force) on same curves' geometry at enhanced service speed. By tilting the carbody of a rail passenger vehicle relative to the track plane during curve negotiation, it is therefore possible to operate at speeds higher than might be acceptable to passengers in a non-tilting vehicle, and thus reduce overall trip time. The recognized advantage of tilting trains is to increase the achievable service speed for passenger trains on existing tracks without being forced to invest very large sums of money to build a dedicated new track or to alter the geometry of the existing curves (Boon, Hayes 1992). Both hydraulic and electromechanical actuation systems have been used to provide the controlled force necessary to tilt the carbodies of the train vehicles. The first tilting trains used hydraulic actuation technology, then the preference seemed to veer towards electromechanical actuation, but the most recent tilting trains make again use of hydraulic actuation systems.

The hydraulic actuation systems consist of hydraulic linear actuators accepting the controlled hydraulic flow from hydraulic power generation units located at the center of each train vehicle, with each hydraulic power generation unit consisting of an electrically driven pump, accumulator, reservoir, filters and a complement of control and protection valves. The carbody tilt angle of each train vehicle is measured by two angular position sensors.

A concept schematic of a hydraulic power generation and position control system for tilting trains is shown in Fig. 1.

* Jacazio et al.: This is an open-access article distributed under the terms of the Creative Commons Attribution 3.0 United States License, which permits unrestricted use, distribution, and reproduction in any medium, provided the original author and source are credited.

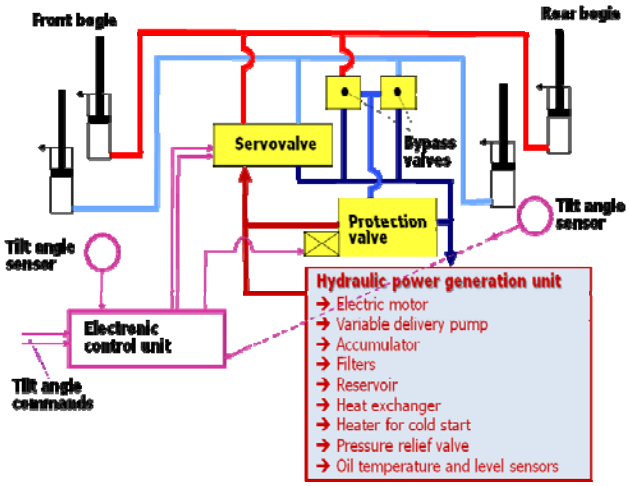

Figure 1: Concept schematic of a hydraulic power generation and position control system for tilting trains

Each train vehicle has its own hydraulic power generation and control unit (HPGCU) located in a central position, four hydraulic actuators for carbody tilting and the pipework interconnecting the actuators with the HPGCU. The hydraulic actuators for carbody tilting are placed near the front and rear end of the vehicle, on the right and left side, and operate in a push-pull arrangement with the left actuators extending while the right actuators retracting, or viceversa, depending on the direction of the commanded titl angle.

The HPGCU contains all the components necessary to generate and control the pressurized fluid flow to the hydraulic actuators, to control the cleanliness and the temperature of the hydraulic fluid and to provide protection in case of malfunctioning of any component. In particular, the pressurized fluid flow is provided by an electrically driven, pressure compensated, variable delivery pump. The control of the flows to the carbody actuators is performed by an electrohydraulic servovalve which is the power modulating component for the carbody position servoloop.

The carbody tilt angle of each train vehicle is commanded by the train electronics as a function of the lateral acceleration, and a position servoloop is created for each vehicle in which the commands are compared with the actual tilt angle in order to close the position feedback loop. The servoloop position errors are processed by an appropriate control law that eventually generates the input signals to the controlling servovalves.

The control loop is single-hydraulic, dual-electrical and uses a single electrohydraulic servovalve with independent electrical coils accepting the control currents from the two independent control computers. Each computer interfaces with one of the two tilt angle sensors and mutually exchanges with the other computer the information on the angle position and current values as well as the computer health status. Each computer can thus generate an equal consolidated position feedback based on the average of the two tilt angle sensors signals, or can use the remaining single signal after a tilt angle sensor failure has been recognized and the signal from that sensor is then ignored.

The control law (Fig.2) is based on a PID controller with a relatively low value of the integrator gain and a stauration on the integrator output. The function of the integrator is in fact to compensate for the steady state, or slow varying servovalve offsets, while the dynamic performance is dependent on the proportional and derivative gains of the control law.

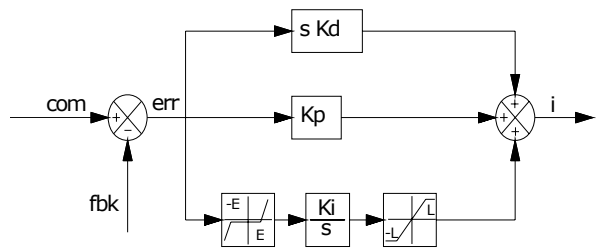

Figure 2: Concept block diagram of the tilt angle control law

2. THE POSITION SENSORS

Different types of position sensors can in principle be used for measuring the tilt angle of the carbody; however, environmental, interface and cost issues limit the choice of sensors to very few types. Eventually, capacitive transducers have been typically used for measuring the tilt angle of the carbody and this paper makes thus reference to these transducers.

Although these sensors proved to be suitable to measure the carbody tilt angle and have a fairly good reliability record in revenue service, a critical issue for them is a difficulty in implementing monitoring logics able to recognize all type of their possible failures. Failures such as a broken wire or a short circuit lead to an out of scale signal and can be easily detected by a monitoring logic, but other malfunctionings such as degradations originating variations of the scale factor, or increased offsets are more subtle events that cannot be detected by the normal monitoring routines.

In order to counter the possibility of an undetected sensors failure, the existing tilting trains have their vehicles equipped with dual redundant sensors, hence a comparison between the two sensors can be made. An anomalous behaviour of one of them will thus originate a difference between the output signals of the two sensors and an alert is generated by the monitoring logic.

3. CRITICAL ISSUES WITH THE PRESENT TECHNIQUES FOR ASSESSING THE SENSORS HEALTH

The techniques implemented by the tilting trains manufacturers for detecting failures of the carbody sensors are normally based on two checks:

- Verification that the output signal of the sensor is within a valid range
- Comparison between the output signals of the two redundant sensors

In case the first check indicates that the signal of one of the two sensors is out of range, that sensor is recognized as failed. In case the output signals of the two sensors are within the valid range, but differ from each other, a failure is recognized, but it is not possible to determine which sensor is healthy and which is failed. In this case, the position feedback, which is obtained by performing the average of the two sensors output signals, is obviously corrupted and the position control loop does not work any longer. The system operation is hence disabled, which entails the loss of tilting capability of the train and the reduction of the train speed to ensure a comfortable and safe travel, but with the penalty of a service delay.

For the cases for which the monitoring logic actually detects which of the two sensors is failed, the carbody tilting operation could in principle continue because the signal of the failed sensor can be discarded and the position control loop of the carbody tilt angle can continue using the feedback signal of the remaining healthy sensor. Though this is possible, preference is given to anyhow disable the carbody tilting operation and reduce the train speed after a sensor failure also if the failed sensor has been identified and isolated. The rationale is that in the event of a subsequent undetected failure of the remaining tilt angle sensor of the same vehicle, an uncontrolled carbody tilt angle would be originated. Though an undetected failure of the second sensor of a train vehicle after a failure of the first sensor during a single train ride is a very improbable event, still this combination of failures could lead to hazardous conditions, hence the carbody tilting is disabled after a first failure of any of its tilt angle sensors.

The tilting trains in revenue service have different compositions, with the number of vehicles ranging from three to ten; if we consider a medium-size train comprised of seven vehicles, each vehicle equipped with two tilt angle sensors, it turns out that the failure of any of its 14 tilt angle sensors brings about the loss of the train tilting capability.

The capacitive type sensors used to measure the tilt angle are very reliable devices, therefore, the probability of loosing the tilting operation as a consequence of a tilt angle sensor is in the end low, still, improvements are encouraged to devise ways of preventing the failure of any single sensor from forcing to disable the carbody tilting function.

A first possibility is of course to add one sensor and thus have each train vehicle provided with three tilt angle sensors. This solution would allow the possibility of performing a majority voting among the three sensors to identify the failed one and would still leave a redundancy after a first sensor failure, thereby entailing an unabated operation after the failure. This solution is working in principle, but besides the penalty of adding a sensor and the associated wiring in each vehicle, a problem exists on how to manage the third sensor signal. The train electronics is in fact based on a dual architecture in which each of the two equal, but independent electronic sections interface with their sensors and mutually exchange informations. If one of the two electronic sections is modified to accept and process the signal of and additional sensor, that would make the two sections different with several negative implications on overall system architecture, logistics, maintenance and costs.

In order to keep a symmetrical architecture with two equal electronic sections a quadruplex sensors configuration should be introduced, with two sensors interfacing with one electronic section and the other two sensors with the other electronics. This solution would be the optimal from the operational point of view, but would double the total number of sensors with their associated electrical harness. For a 7-train vehicle the sensor number would increase from 14 to 28 bringing about a large additional cost and a decrease of the logistic reliability.

4. SENSORS ADVANCED HEALTH MANAGEMENT

The advanced technique herein presented was devised for being applied to legacy systems; it does not require any hardware modification, but it makes a better use of the available signals to enhance the ability of detecting an anomalous behaviour of the tilt angle sensors, allowing the carbody tilting operation to continue after a sensor failure. Of course, the existing sensors monitors outlined at the beginning of section 3 of this paper still remain; the advanced monitoring technique is intended as an additional procedure able to better identify any failure of a sensor, thereby providing the ability to always sort out which of the two sensors of a carbody is failed, and to enable the detection of a sensor failure also after the other sensor of the same carbody has already failed. This will allow the carbody tilting function to continue after a first failure of a tilt angle sensor.

The advanced sensors health management makes use of two parallel and simultaneous procedures:

- Sensors modeling
- Sensors correlation

The sensors modeling is a local process which is performed for each individual vehicle, while the sensors correlation is a global process which makes use of the signals of the sensors of all vehicles. The results of these two procedures are then fused by a decision maker, which eventually provides the sensors health status to the train control system. The information will thus be available on whether the tilting operation can continue or must be disabled and the train speed reduced.

A concept flow chart of the sensors health management process is shown in Fig. 3. This flow chart makes reference to the case of a 7-vehicle train, but its principle can be applied to a train with any number of vehicles.

The following sections outline the sensors modeling, correlation and decision making procedures.

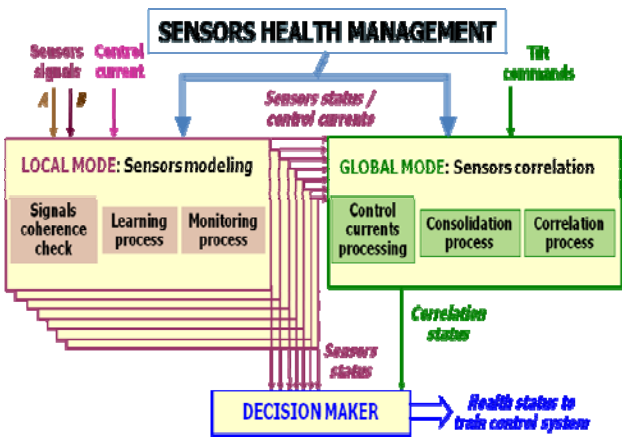

Figure 3: Concept flow chart of the sensors health management process

5. SENSORS MODELING

The sensors modeling is comprised of three processes that are performed for each train vehicle: a coherence check, a learning process and a monitoring process. The logic flow chart for these three processes relevant to the sensors modeling is shown in Fig. 4.

The signals A and B provided by the two tilt angle sensors of a vehicle carbody are first checked to verify that they are in their valid range of 4 to 20 mA. In case the electrical output signal is outside this range a failure of that sensor is recognized and its signal is discarded and the train tilting continues using the remaining sensor to close the tilt angle feedback loop. If both signals A and B pass the valid range check, they are compared to each other. If their difference is below an acceptable threshold, a signals coherence and hence a good health status is recognized; however, if a difference about the threshold prevails and lasts more than a given time, a lack of signals coherence is detected.

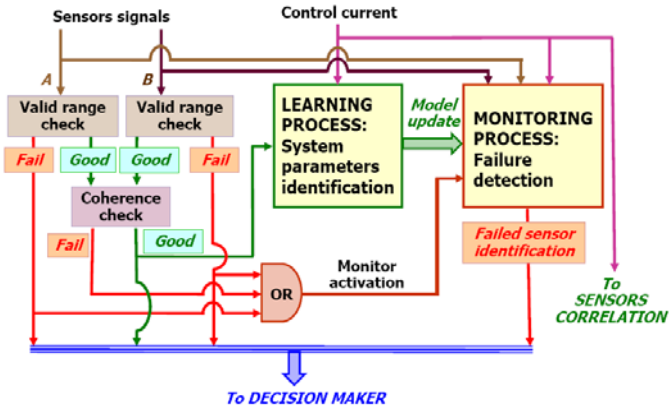

Figure 4: Flow chart for the processes relevant to the sensors modeling

Since the two tilt angle sensors of a vehicle are placed on the front and rear bogie, a transient difference can be originated by the carbody skew when the vehicle enters or exits a curve. Since a curved track has a cant increasing with the track curvature, a carbody skew develops when the track curvature is not constant, as it occurs at the beginning and end of a curve. Based on an analysis of the operational data, the threshold for recognizing lack of coherence was set at $\Delta\vartheta_{TH} = 1°$ for more than $\delta t_0 = 1.5$ s. When lack of coherence is detected, the issue is to understand which of the two sensors is good and which is failed. The detection of the failed sensor is performed by the monitoring process, that uses a system model to analyze the coherence between input and output signals as it will be outlined in the following of this section. The same monitoring process is also performed to check the health status of the remaining sensor after a failure of the other sensor of the same vehicle. In fact, not all failures or malfunctionings of a sensor can be detected by the valid range check performed on its output signal. The basic idea behind the sensors modeling process is that for a hydraulic actuation system, servovalve current, flow rate and actuator load make up a set of three interrelated variables: if two of them are known, the third one can be determined. Models of servovalve controlled electrohydraulic systems are shown in the literature (Borello, Dalla Vedova, Jacazio, Sorli 2009), (Byington, Watson, Edwards, Stoelting 2004). For the hydraulic actuation systems of tilting trains the previously three referenced variables are either known, or can be determined from the available information without additional sensors, as it will be discussed in the following.

The servovalve current is a known quantity because

it is generated by the control system itself.

The flow rate is the product of the actuators area times their speed. The actuator area is a design parameter, while the actuator speed can be determined by performing two computational steps. Firstly, the tilt angle measured by the relevant sensors must be converted into actuators position taking into account the kinematic ratio between tilt angle and actuator position, which is a non-linear function of the tilt angle itself. Secondly, the time derivative of the actuators position is performed to compute the actuators speed and hence the flow rate. The kinematics of the tilting system is shown in the diagram of Fig. 5. The carbody is connected to the bogie by means of two hinged links, thereby making up a four-bar linkage mechanism. Two single-effect hydraulic actuators have their pistons hinged to the carbody and their cylinders hinged to the bogie. The combination of the two single-effect actuators is equivalent to a single double effect actuator; therefore, when a new position command is given, one actuator extends while the other one retracts and the carbody angle changes according to the four-bar linkage kinematics. By indicating with γ the angular speed of the carbody, A the actuators area, b_1, b_2 the actuators arms with respect to the instantaneous velocity center C_V, the absolute values of the actuators flow rates are:

$$Q_1 = b_1 A \gamma \qquad Q_2 = b_2 A \gamma \tag{1}$$

The signs of Q_1 and Q_2 depend on whether the actuator is extending or retracting. The actuators arms b_1 and b_2 are not constant, but are a known function of the tilt angle ϑ.

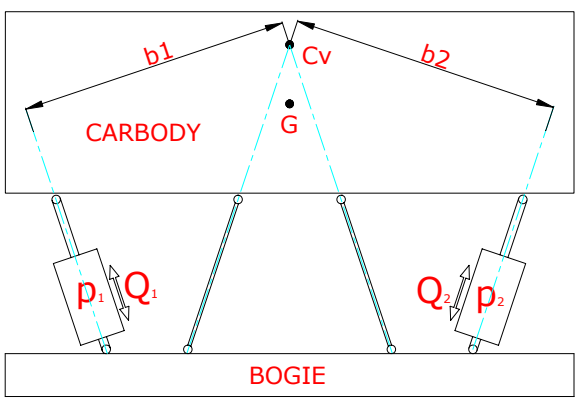

Figure 5: Diagram of the carbody tilting system kinematics

The torque T developed by the total of the two actuators about the instantaneous velocity center C_V is given by:

$$T = p_1 b_1 A - p_2 b_2 A \tag{2}$$

where p_1 and p_2 are the pressures in the two actuators.

The torque T developed by the actuators must balance the sum of two contributions:

The moment M_W of the carbody weight with respect to C_V, which depends on the carbody mass and on the distance between the carbody weight vector and C_V. This distance is a known function of the carbody tilt angle ϑ, since it is determined by the four-bar linkage kinematics.

The friction torque T_F, acting in the direction opposite to the carbody angular speed.

The actuators flows are controlled by a single electrohydraulic servovalve which modulates the areas of the two equal metering ports proportionally to the control current i. The flow rates Q_1 and Q_2 are then a function of both the control current i and of the pressure drop through the relevant metering port. When actuator 1 is extending and actuator 2 is retracting, the flow rates are given by:

$$Q_1 = k_V i \sqrt{(p_S - p_1)} \qquad Q_2 = k_V i \sqrt{(p_2 - p_R)} \tag{3}$$

where p_S and p_R are the supply and return pressures and k_V is a flow coefficient depending on the servovalve metering ports geometry and on the hydraulic fluid properties.

By combining Eqs. (1) through (3) and taking into account the definitions of M_W and T_F, the following relationships can be obtained which relate angular speed γ, control current i and carbody weight moment M_W:

For an opposing load condition:

$$\gamma = k_V i \sqrt{\frac{(p_S b_1 - p_R b_2)A - M_W - T_F}{A^3 (b_1^3 + b_2^3)}} \tag{4}$$

For an aiding load condition:

$$\gamma = k_V i \sqrt{\frac{(p_S b_1 - p_R b_2)A + M_W - T_F}{A^3 (b_1^3 + b_2^3)}} \tag{5}$$

An opposing load condition occurs when the absolute value of the tilt angle ϑ increases, and aiding load condition prevails for the opposite case. It is important to notice that the control law of the tilt angle servoloop consists of a PI controller in which the control is essentially performed by the proportional gain, while the integrator gain has a small value, it has a saturation and its purpose is to cancel out the effects of the steady state errors that are originated by the servovalves offsets. By this way, the effects of the servovalve offsets are eliminated and the servovalve is centered in its hydraulic null when the servoloop error is zero. The current i of all equations of this paper is thus the current determined by the proportional gain, which actually determines the servovalve opening,

while the contribution to the current given by the integrator gain exactly matches the servovalve offset.

Equations (4) and (5) make up the basis for the sensors monitoring. The supply and return pressures p_S and p_R are known since the servovalve is connected to a constant pressure system and discharges the flow to a resevoir open to the atmospheric pressure. The actuator area A and the valve flow gain k_V are known parameters determined by the components geometry. The friction torque T_F is a quantity that depends on the frictional losses occurring during the carbody rotation and is also a known quantity. The actuators moments arms b_1 and b_2, and the weight moment M_W are quantities depending on known physical parameters and on the tilt angle ϑ. Therefore, the principle for the monitoring process is the following.

Starting from the value of ϑ obtained from the tilt angle sensor, the values of b_1, b_2, and M_W are computed, which are introduced in the expressions of Eqs. (4) and (5) together with the value of the current i, which is known since it is generated by the control system itself. As a result, the values of the expressions on the right-hand sides of Eqs. (4) and (5) are determined. The value of the carbody angular speed γ is determined by calculating the time derivative of the tilt angle ϑ and a comparison can thus be made between the values obtained for the two sides of Eqs. (4) and (5). The difference between these values is within a normal tolerance range for a correct system operation, but a sensor failure causes a loss of coherence between the same values, and a failure can hence be recognized as it will be described later in this section.

The values of the actuators arms b_1, b_2 and the actuators area A are well defined quantities depending on the geometry of the system components and do not change. The servovalve flow coefficient k_V may have some variations due to differences of the hydraulic fluid temperature. Such variations, however, are small since the the hydraulic power generation unit is provided with a thermal control system which limits the temperature variations of the hydraulic fluid. On the contrary, the friction torque T_F is subjected to greater variations: different environment temperatures, as well as wear and usage bring about changes of the friction coefficients and of the drag torque.

The weight moment M_W can also vary within a certain range for the same value of the tilt angle ϑ. In fact, the actual mass of the tilted mass is the sum of the mass of the carbody and of the payload. While the carbody mass is constant, that of the payload is variable. The monitoring logic can work with a typical average values of these variable quantities, but in order to get a better accuracy and increase the robustness of the monitoring, an identification logic was defined allowing to assess the values of the friction torque and of the total carbody + payload mass. The entire sensors modeling thus consists of two modes: learning and monitoring.

The ***learning process*** takes place when the two tilt angle sensors are both active and the difference between their output signals is below an established threshold, which occurs when the system operates normally. While in this condition, for which a normal operation is recognized, the system of two equations (4) and (5) can be worked out to determine the values of T_F and M_W for each tilt angle ϑ.

When the train negotiates a curve, a tilt angle is commanded, that is followed by a command back to zero when the train exits the curve. While the tilt angle is increasing, the opposing load condition (4) prevails, while the aiding load condition (5) prevails when the tilt angle decreases. Therefore, the learning algorithm works in the following way.

When the train enters a curve and the tilt angle increases, the algorithm uses Eq. (4) to compute the value of ($-M_W$ - T_F) based on the value of the current i and on thoseof γ, b_1 and b_2 which are determined from the consolidated value ϑ of the tilt angle. This is in turn obtained from the mean value of the signals generated by the two tilt angle sensors. When the train exits the curve, the value of (M_W - T_F) is computed in the same way from Eq. (5). Since no changes of mass and frictional losses occur in the short time interval between entering and leaving a curve, by knowing ($-M_W$ - T_F) and (M_W - T_F) for the same value of ϑ it is possible to find out the values of M_W and T_F.

The computed values of M_W and T_F are stored in a memory for each value of tilt angle ϑ, and a moving average is then performed which adapts the values of M_W and T_F to the variations that can occur in service.

The above described learning process occurs only when the tilt absolute value of the angle rate γ is above a minimum threshold γ_T, since very small tilt angle rate could lead to less accurate results. The learning process concept block diagram is shown in Fig. 6.

If a difference between the signals of the two tilt angle sensors of the same carbody above an established threshold $\Delta\vartheta_{TH}$ is detected, and that difference lasts more than a given time δt_0, or if only one sensor is active, then the learning process is discontinued and the modeling process reverts to the ***monitoring process***. The logic for the monitoring mode is described by the block diagram of Fig. 7.

In the monitoring process, the actual tilt rates γ_{TA} and γ_{TB} resulting from the tilt angle signals ϑ_A and ϑ_B generated by the two tilt angle sensors are compared with the tilt rates γ_{MA} and γ_{MB} computed from the system model described in first part of this section, and by using the last values of M_W and T_F determined in the course of the learning process. The absolute value $|\delta\gamma|$

of the difference between actual and computed tilt angle rate is processed by a filtering element whose purpose is to eliminate undesired noise in the monitoring process. The filtering element sets its output e equal to $|\delta\gamma|$ only when $|\delta\gamma|$ is greater than a minimum value γ_B. This prevents differences resulting from the inaccuracies of the modeling process to be counted as errors.

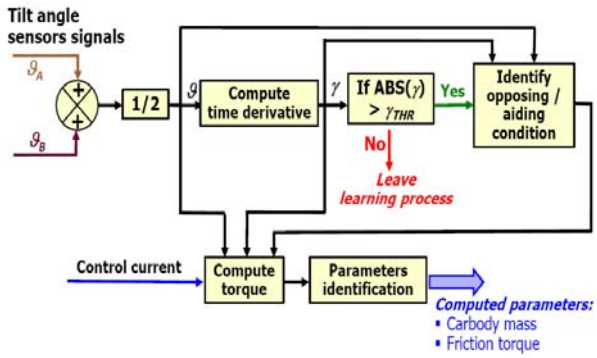

Figure 6: Concept block diagram of the learning process

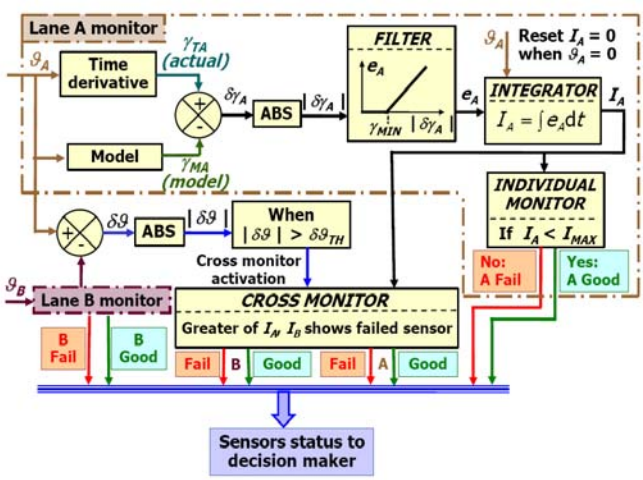

Figure 7: Concept block diagram of the monitoring process

The resulting errors e_1 and e_2 for the two tilt angle sensors are then integrated with time. In case of sensor failure or malfunctioning, the relevant integrator output (I_A or I_B) grows faster than the other, and by looking at which of the two outputs (I_A or I_B) is greater, it is possible to sort out which is the failed sensor.

This monitoring logic is activated when both sensors are active and a difference between their two signals has been detected and positively confirmed; therefore, it is possible to rapidly understand which of the two sensors is failed. It must be emphasized that for this condition the monitor does not compare the computed value of a certain quantity against an acceptable limit and has to decide whether a failure has occurred or not. The monitor already knows that a failure exists and simply compares two quantities (I_A and I_B) to realize which of the two sensors is failed. In this condition, there is an extremely low probability of error: the quantity I relevant to the failed sensor will definitely be greater than that for the healthy one and the failed sensor can be positively identified with practically zero error probability.

When only one sensor is active because the other one was recognized failed, the monitoring process continues for the remaining healthy one using the last values of M_W and T_F determined in the course of the learning process. Obviously, in this case it is not possible to compare the signals of the two sensors. Therefore, the monitoring logic relies on comparing the time integral of the absolute value of the error e resulting from the filtered difference between the actual γ_A and computed γ_M tilt rates with a limit threshold I_{MAX}. When the integrator output I becomes greater than I_{MAX} a failure is recognized.

Since the monitoring process is meaningful only when the vehicle carbody is commanded to tilt, the integrators outputs (I_A and I_B) are reset to zero when the train leaves a curve and travels again on a straight track, hence the tilt angle command is again equal to zero. This instruction prevents that occasional disturbances, not related to sensors malfunctionings, are progressively added by the integrator and possibly generate a false alarm.

Since the monitoring process implemented when only a single sensor is less accurate than the one for the case of two sensors active, the limit I_{MAX} beyond which a sensor failure is recognized cannot be set too low to minimize the risk of false alarms. This, however, leaves room for a greater possibility of missed failures than for the case of two sensors active. A particular concern is that this monitor, which is based on the integration of an error with time, is not as fast as necessary to pick up sudden large failures which could lead to transient highly uncomfortable riding conditions. In order to improve the overall robustness of the sensors health monitoring system, a correlation process is run in parallel to the modeling process to provide a redundant information on the sensors health.

6. SENSORS CORRELATION

The basis of the correlation process is that when a train negotiates a curve all the train vehicles receive in sequence equal tilt angle commands, albeit delayed of amounts equal to the ratio between vehicle length and train speed. Since all vehicles are equal with only minor mass differences, there is an almost equal time history of their servovalve currents as the vehicles enter and leave a curve. A concept flow chart of the correlation process is shown in Fig. 8, referring to a 7-

vehicle train. There is a total of 5 correlators, each receiving the tilt commands and the control currents from three consecutive vehicles. Each correlator peforms the functions indicated in the diagram of Fig. 9.

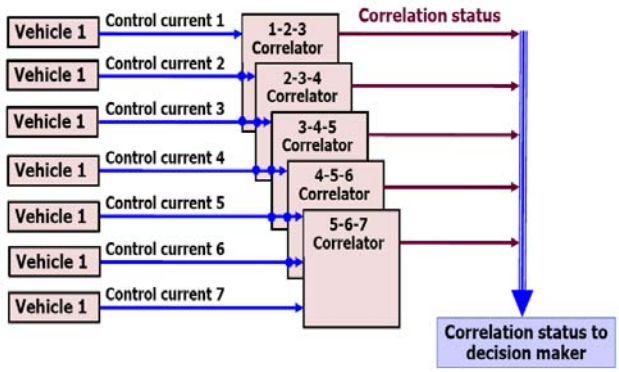

Figure 8: Concept block diagram of the sensors correlation logic

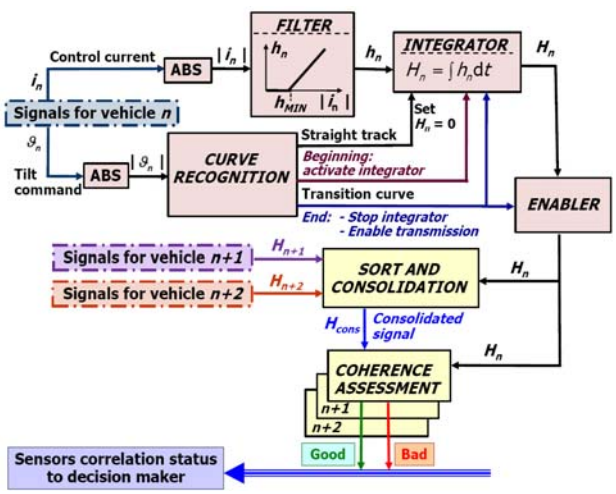

Figure 9: Correlator functions

The basic principle of the sensors correlation is to evaluate the time integral of the servovalve current of each vehicle servoactuator from the beginning to the end of the transition curve. It is known that the passage from a straight track to a fixed radius curved track occurs along a transition curve, with progressively increasing curvature, often consisting of a clothoid spiral. This track alignment is instrumental in reducing the rate of change of lateral acceleration, known as lateral jerk, which is a cause of passengers discomfort. All train vehicles are approximately equal and are subjected to equal tilt commands, therefore, the servovalves currents must be approximately equal and only shifted in time according to the train speed. While the train is traveling on a straight track and the tilt angle command is equal to zero, the value of the current integral H for each vehicle is set equal to 0. As the train enters into a curved track and the absolute value of the tilt angle command is greater than ϑ_{TH}, a routine is activated to compute the time integral of the absolute value of the filtered servovalve current i_F:

$$H = \int |i_F| dt \tag{6}$$

The servovalve current filter simply sets to zero all values of the current below a threshold i_{TH}. This is instrumental in minimizing the disturbance created by the servovalve current noise. As each vehicle travels along the transition curve and it is subjected to an increasing lateral acceleration, the tilt angle command increases until reaching a steady state value when the transistion curve ends and the vehicle travels along a constant curvature track. When this condition is attained the computation of the time integral of the servovalve current is stopped since the servovalve current falls to a low value and it becomes little significant. No flow is required by the actuators in that condition and the servovalve is away from its hydraulic null of only the small amount necessary to create the actuators pressure differential necessary to balance the moment of the vehicle weight in the tilted condition. Small disturbances of the servovalve current that occur in absolutely normal conditions could thus give an unwanted contribution to the value of H , thereby increasing the probability of nuisance errors signaling.

Simultaneously to stopping the computation of the time integral H of the servovalve current, an enable signal is activated for transmitting the computed value of H to the sort and consolidation routine, while the value of the integrator is reset to zero to make it ready for the next computation. The sort and consolidation routine of each correlator accepts as an input the values of H for three consecutive vehicles. As the newly computed value of H of third vehicle in line is received, the sort routine places the three values of H_n in an ascending order and takes the intermediate one as the consolidated value H_{cons}. Each individual value H_n is then compared with the consolidated value H_{cons} by a voting algorithm performing the following correlation check:

$$\frac{|H_n - H_{cons}|}{H_{cons}} \le \delta H \tag{7}$$

If this correlation check is positive, a healthy sensor status is set to good; in the opposite case is set to bad.

For a 7-vehicle train this process is performed by five correlators as schematically shown in the diagram of Fig. 8. The outputs of all five correlators are sent to the decision maker.

7. DECISION MAKER

The decision maker consists of a logic routine accepting the output signals from sensors modeling and correlation processes to provide the information of the sensors health status to the train control system. A concept flow chart of the decision maker is shown in Fig. 10.

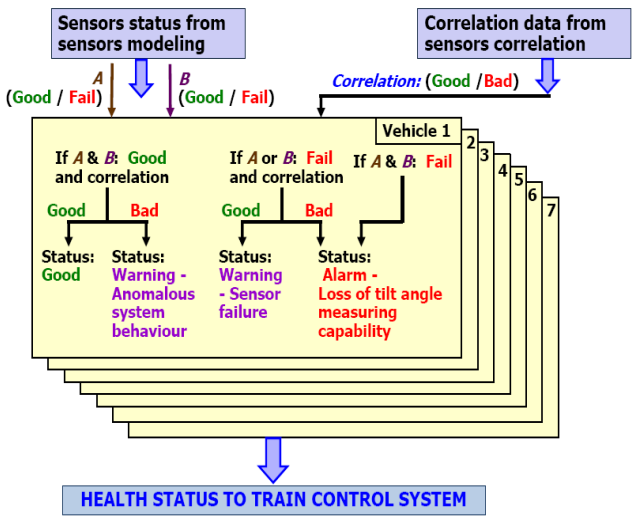

Figure 10: Decision maker flow chart

The decision maker works as follows. For each vehicle the decision maker receives the status (good / fail) of the two sensors (A, B) from the sensors modeling process and the correlation status (good / bad) from the correlation process and takes the following decisions.

If A and B status are "good" and the correlation signal is "good", the health status is set to "good".

If A and B status are "good" and the correlation signal is "bad", a warning is generated of an anomalous tilt system behaviour. In fact, this condition is not the result of a sensors error since both sensors are good, but can be originated by malfunctionings of the tilt system of that vehicle, such as a degradation of the servovalve performance, or an anomalous increase of the friction torque during the carbody tilting. The tilting operation can continue since the commanded tilt angle are attained, but the warning signal alerts the maintenance crew that some part of the tilt system of that vehicle operates outside its normal conditions.

If either A or B status is "fail" and the correlation signal is "good", a warning is generated of a sensor failure is issued. The tilting operation can continue since the commanded tilt angle are attained, but the warning signal alerts the maintenance crew of the failure of a specific sensor which must be replaced.

If either A or B status is "fail" and the correlation signal is "bad", an alarm signal is generated indicating the loss of tilt angle measurement capability. Upon receiving the alarm signal the train control system will disable the tilting function and reduce the train speed to a safe and comfortable value for the passengers.

If both A and B status is "fail" the tilt angle measurement capability is lost and an alarm signal is generated as in the previous case.

8. ASSESSMENT OF THE SENSORS HEALTH MANAGEMENT PERFORMANCE

The merits of the sensors health management system described in this paper were assessed by injecting different types of failures and degradations in a comprehensive model of a 7-vehicle tilting train traveling along different tracks. In particular, all data refer to the Neitech tilting train developed by Alstom, which has been in revenue service in the past ten year for the german railways. The maximum tilt angle is 8° and the maximum tilt rate is 5°/s; the flow to the actuators is controlled by a servovalve with a rated current of 40 mA.

The mathematical model of the tilting train used for the simulations is a physical based model in which all system components are described by the mathematical relationships among the state variables and the physical parameters. The model was developed for describing the behaviour of the train tilting systems and proved to be very accurate when later compared with the data measured during revenue service operations. Figure 11 shows an example of comparison between model results and test data.

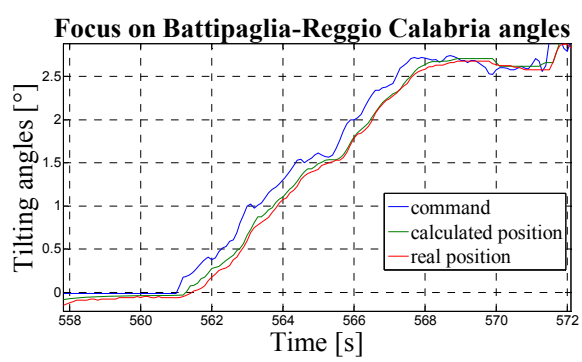

Figure 11: Mathematical model accuracy

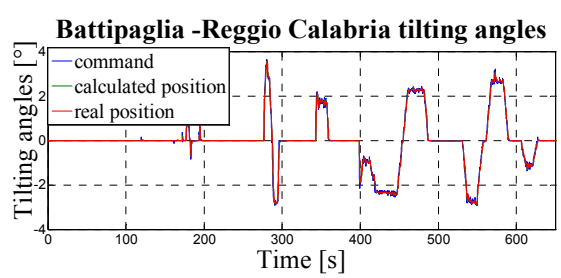

Figure 12: Focus on Battipaglia-Reggio Calabria track

Taking advantage of this model, simulations were then run to check the ability of the sensors health management to recognize sensors failures and the possibility of generating false alarms. The simulations start with default values of the system parameters stored in the health management routines and with actual parameters different from the default ones. As the simulation progresses the learning process recognizes the actual values and consequently updates those used for the monitoring process.

The simulations were run using the time histories of tilt angle commands for a train traveling along tracks creating medium and severe duty cycles for the tilt control system. The medium duty cycle refers to a track in southern Italy, from Battipaglia to Reggio Calabria (Fig. 13), while the severe duty cycle refers to a track in central Germany, from Lichtenfels to Saafeld, (Fig. 14). The simulations duly took into account the difference of tilt angles measured by the sensors placed on the front and the rear of the same vehicle due to the vehicle skew resulting from the variable curvature of the transition curve. The amount of vehicle skew is a function of the rate of change of the track curvature and of the vehicle stiffness and has a maximum value of 1.5° for the train taken as a reference for this study.

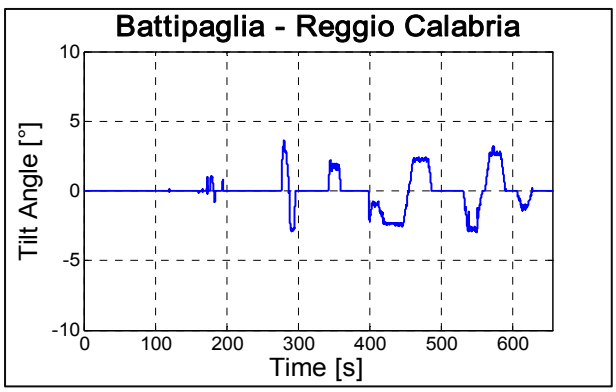

Figure 13: Time sequence of tilt angle commands for a portion of the Battipaglia - Reggio Calabria track

In order to reproduce with the maximum possible accuracy the range of conditions that could actually occur in revenue service, normal variations of the system parameters from their nominal values were introduced in the system model.

Firstly, a difference up to ±5% of nominal average was randomly assumed for the mass of each vehicle and a difference up to ±20% of nominal average was randomly assumed for the friction torque.

Secondly, variations of the servovalve offset that occur under normal operating conditions due to the variations of parameters such as return pressure and temperature of the hydraulic fluid were introduced. The servovalve offset was accounted for by adding a disturbance current io defined as the sum of three terms:

$$i_o = i_{o1} + i_{o2} + i_{o3} \tag{8}$$

In this equation i_{o1} is a constant offset equal to 2% of the rated current. The second term i_{o2} is a short term variation of the servovalve offset and was assumed to occur as a step, reach a maximum of ±3% of the rated current, last up to 2 s and be repeated with a time interval up to 10 s according to a random pattern. The third term is a long term variation of the offset, which is mainly related to fluid temperature changes. It was assumed to take place as a ramp variation, have a maximum of ±5% of the rated current, last up to a minute and occur in a random way.

Thirdly, a random noise with a maximum amplitude of ±0.3% of the full scale signal was added to the output signal of each tilt angle sensor. This noise level was actually observed in actual operation.

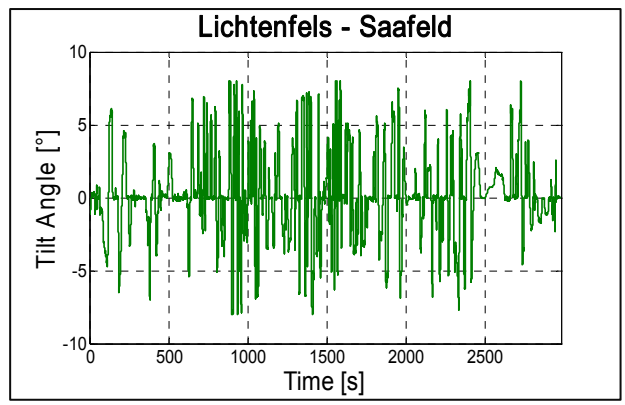

Figure 14: Time sequence of tilt angle commands for a portion of the Lichtenfels - Saafeld track

Train rides along the two above referenced tracks were simulated with the simultaneous presence of the disturbances previously outlined and thresholds activating monitors and alarms were established to make sure that no false alarm would be generated when the system parameters were in their normal range. The following settings were eventually established which proved to be safe to prevent false alarms over for any possible adverse combination of the system parameters values in their normal range.

- Tilt rate threshold γ_L for activation of the learning process = 1°/s (Fig. 6)
- Dead band γ_B on the tilt rate input error of the monitoring process = 1°/s (Fig. 7)
- Lack of coherence threshold $\Delta\vartheta_{TH}$ for the two sensors signals of the same carbody = 1°
- Persistance time δt_0 above coherence threshold necessary to activate the monitoring process = 1.5 s

- Time limit for comparing the integrators outputs I_A, I_B of the monitoring process for the condition of the two sensors active = 2 s
- Limit value I_{MAX} of the time integral of the tilt rate error $(\gamma_T - \gamma_M) = 2°$
- Tilt command threshold ϑ_{TH} for activation of the correlator function = 0.5°
- Current threshold i_{TH} for the servovalve current filter = 4 mA
- Limit for positive correlation check $\delta H = 0.1$

Once these limits were established and proven effective, failures and degradations of the sensors were introduced. In particular, the following malfunctionings were considered:

- Sudden loss or short of sensor signal
- Changes of sensor signal offset
- Variations of sensor signal sensitivity
- Change of sensor linearity error
- Sensor signal instability

Offset and sensitivity variations were simulated both as sudden or slow varying processes. The simulations were run first starting from a normal condition (all sensors operating), then from a condition in which the sensor of a train vehicle is failed.

In addition to these sensors malfunctionings, an anomalous increase of the friction torque in one of the vehicles carbody was simulated to verify the ability of the correlation process to detect this condition.

The simulation campaign showed that sensors health management process was able to positively recognize all type of malfunctionings. A summary of its performance is presented hereunder.

- An out of range signal is always detected
- Minimum change of signal offset necessary to recognize a sensor failure is equal to 1.1° starting from a two active sensors condition and 1.5° starting from a single active sensor condition. The maximum tilt angle error before the failure is detected is 1.5°
- Minimum change of sensor sensitivity necessary to recognize a sensor failure is equal to 30% starting from a two active sensors condition and 40% starting from a single active sensor condition. The maximum tilt angle error before the failure is detected is 2.3°
- Minimum signal instability necessary to recognize a sensor failure for the two active sensor condition and the single sensor is equal to 1.1° from 0.2 Hz to 1 Hz. The maximum tilt angle error before the failure is detected is 2.5°
- An increase of friction torque equal to 300% of nominal is necessary to activate a warning of anomalous system behaviour. Though this increase looks very large, it could actually occur considering the harsh environment for the carbody tilting system

Two simulations examples are shown in Fig. 15 and 16. Figure 15 refer to the case of a normal operating system in which a large offset suddenly originates in a tilt angle sensor; the monitoring process recognizes the failure. Figure 16 also refers to the case of a large offset suddenly originated in a tilt angle sensor, but starting from a condition in which the other sensor of the same vehicle is already failed; the correlation process recognizes the failure.

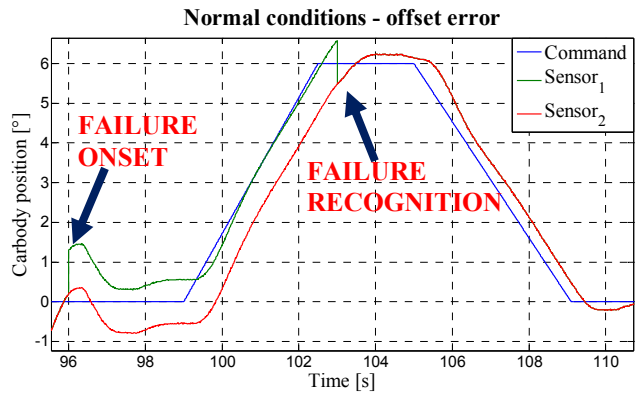

Figure 15: Simulation of the failure case of large sensor offset starting from a normal condition. Failure detected by the monitoring process

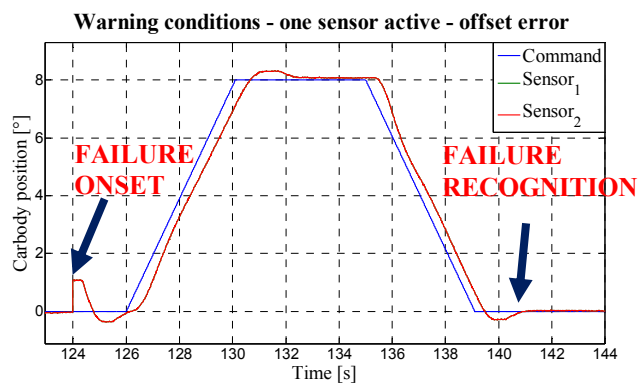

Figure 16: Simulation of the failure case of large sensor offset when the other sensor of the same vehicle is failed. Failure detected by the correlation process

9. CONCLUSIONS

The work herein presented was carried out in order to define a technique able to recognize the failure of tilt angle sensor of a high speed tilting train with minimum risk of missed failures and false alarms. This would allow an unabated operation of the train tilting system after a failure of one of the two sensors of the same train vehicle, while the present monitoring system

disables the tilting operation and reduces the train speed after a lack of coherence between the two sensors of the same vehicle is detected.

The sensors health management process described in this paper was first tested simulating a train ride along two significant tracks over the whole range of normal operating conditions and appropriate limits for the failure detection were established to prevent false alarms. Then, all types of sensors failures and malfunctionings were injected, the ability of the health management system to recognize them was positively assessed and the maximum transient errors of the tilt angle of the vehicle carbody with the failed sensor were evaluated.

The results of the entire simulation campaign proved the robustness of the sensors health management system and a confidence was hence gained in its ability of detecting a sensor failure or malfunctioning with minimum risk of false alarms or missed failures. The implementation of such health management system on a tilting train will thus enable the tilting operation to continue after a first failure of a tilt angle sensor of a train vehicle and thus allow the train to maintain its high speed travel for the remainder of the ride.

ACKNOWLEDGMENT

The authors wish to thank the tilting trains manufacturer Alstom Ferroviaria for their support in the preparation of this paper.

NOMENCLATURE

A = Actuators area
b_1 = Moment arm of actuator 1
b_2 = Moment arm of actuator 2
i = Control current
i_0 = Disturbance current
i_{TH} = Current threshold for the servovalve current filter
k_V = Servovalve flow coefficient
M_W = Carbody weight moment
p_1 = Pressure acting on actuator 1
p_2 = Pressure acting on actuator 2
p_S = Supply pressure
p_R = Return pressure
Q_1 = Flow rate through metering port 1
Q_2 = Flow rate through metering port 2
T = Total torque developed by the actuators
T_F = Friction torque
γ = Carbody tilting angular speed
γ_B = Dead band on the tilt rate input error of the monitoring process
γ_L = Tilt rate threshold γ_L for activation of the learning process
γ_M = Tilt rate computed by the system model
γ_T = Measured tilt rate
$\Delta\vartheta_{TH}$ = Lack of coherence threshold for the two sensors signals of the same carbody
δt_0 = Persistance time above coherence threshold necessary to activate the monitoring process
ϑ = Carbody tilt angle
ϑ_{TH} = Command threshold for activation of the correlator function

REFERENCES

(Borello, Dalla Vedova, Jacazio, Sorli 2009) L. Borello, M. Dalla Vedova, G. Jacazio, M. Sorli. A Prognostic Model for Electrohydraulic Servovalves, Annual Conference of the Prognostics and Health Management Society 2009

(Byington, Watson, Edwards, Stoelting 2004) C. S. Byington, M. Watson, D. Edwards, P. Stoelting A model-based approach to prognostics and health management for flight control actuators, *2004 IEEE Aerospace Conf. Proc.*, Vol. 6, pp. 3551-3562

(Boon, Hayes 1992) C. J. Boon, W.F. Hayes. High Speed Rail Tilt Train Technology: A State of the Art Survey, *1992 US Department of Transportation - Federal Railroad Administration*