Thermo-economic assessment of the integration of steam cycles on offshore platforms

Nguyen, Tuong-Van; Tock, Laurence ; Breuhaus, Peter; Maréchal, François ; Elmegaard, Brian

Published in:
Proceedings of ECOS 2014, 27st International Conference on Efficiency, Cost, Optimization, Simulation and Environmental Impact of Energy Systems

Publication date:
2014

Thermo-economic assessment of the integration of steam cycles on offshore platforms

Tuong-Van Nguyen [a,b], ***Laurence Tock*** [b], ***Peter Breuhaus*** [c], ***François Maréchal*** [b], ***Brian Elmegaard*** [a]

[a] *Section of Thermal Energy, Department of Mechanical Engineering, Technical University of Denmark, Building 403, Nils Koppels Allé, 2800 Kgs. Lyngby, Denmark*

[b] *Industrial Energy Systems Laboratory, École Polytechnique Fédérale de Lausanne, Station postale 9, 1015 Lausanne, Switzerland*

[c] *Department of Energy, International Research Institute of Stavanger, Professor Olav Hanssens vei 15, 4021 Stavanger, Norway*

Abstract:
The integration of steam bottoming cycles on oil platforms is often seen as a possible route to mitigate the CO_2-emissions offshore. In this paper, a North Sea platform and its energy requirements are systematically analysed. The site-scale integration of steam networks is assessed by using thermodynamic and economic performance indicators. The results illustrate the benefits of converting the gas turbines into a combined cycle. Using seawater results in smaller power generation and greater CO_2-emissions than using process water, as the additional power generation in the combined cycle is compensated by the significant pumping demand. This work emphasises that energy improvement efforts should be analysed at the scale of the overall site and not solely at the level of the combined cycle.

Keywords:
Process integration, steam cycles, offshore platforms, oil and gas

1. Introduction

The extraction of oil and gas from petroleum fields is an energy-intensive sector (10 to hundreds MW power). The combustion of diesel and fuel gas in gas turbines for local power generation releases large quantities of pollutants to the atmosphere, making a significant contribution to the global warming potential. Moreover, the treatment of the produced water effluents and cooling water can lead to a discharge of chemicals to the sea.

Offshore plants are designed for the peak production of oil and gas [1–4] and become more and more inefficient with time, since they run further from their nominal design point. The oil production decreases with time, implying that most equipments run at smaller loads. Energy-intensive operating strategies are in use in such cases, such as (i) gas recirculation to prevent compressor surge, (ii) load share between turbines, and (iii) water and gas injection for enhanced oil recovery. This results in turn in a lower efficiency of the gas turbines, a larger fuel consumption and greater CO_2-emissions. the CO_2-tax on hydrocarbon products have increased these last years [5–8], and reducing the fuel consumption and the CO_2-emissions has become a more and more attractive option [9, 10].

This objective can be reached by improving the performance of the processing plant (oil, gas and seawater processing) or by increasing the efficiency of the utility plant (gas turbines and steam cycle). This work focuses on the second route, and a possibility is to integrate a steam bottoming cycle on the turbine exhausts [11–13]. These works focus on the possible layouts of the power cycles and on their

behaviours at design and off-design conditions. However, none considers the energy requirements of the oil processing plant, and they do not analyse the interactions between the processing and utility plants [14–16]. The various system configurations and the synergies between the different utilities should be investigated, and the present work aims therefore to:

- assess the thermo-economic (i.e. energetic and economic) performance of an existing oil and gas platform;
- evaluate the opportunities for integrating steam cycles by conducting a systematic integration analysis;
- estimate the total costs, fuel savings and CO_2-emissions simultaneously, considering the multi-objective aspects of this problem.

2. Methodology

2.1. System description

2.1.1. General overview

Oil and gas from the field reservoir, mixed with subsurface water, enter the production facility at high pressures (10–200 bar) but with temperatures either below ($\leq$ 10 °C) or above ($\geq$ 60 °C) the ambient ones, depending on the oilfield. The facility aims at *separating* the oil, gas and water phases (Figure 1): oil is sent to the shore, gas is either exported or injected back into the reservoir and water is chemically treated and discharged into the environment.

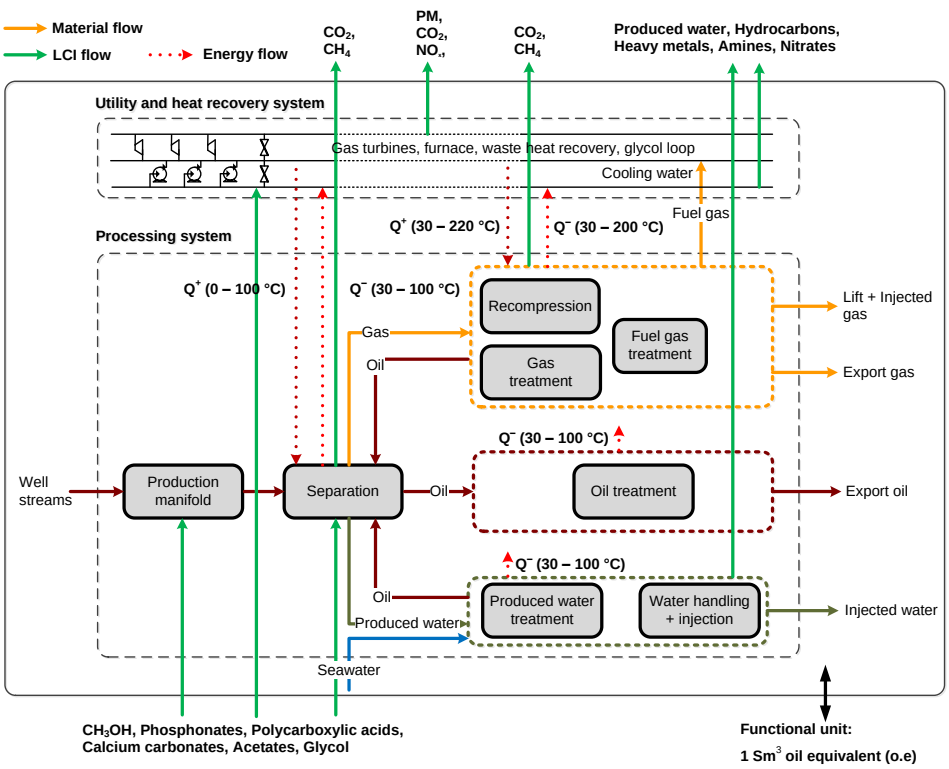

Fig. 1: A generalised overview of the oil and gas processing on an offshore platform.

The oil, gas and water separation is performed in several stages operated at different conditions: the pressure is decreased close to the atmospheric pressure ($\simeq$ 1.5–2.5 bar) and the temperatures can be increased. Oil is then cooled down, pumped and exported. The recovered gas is compressed to the initial feed pressure and may be compressed further if it is injected or exported ($\simeq$ 100–250 bar). Produced water is treated in a dedicated section, in which solid particulates and dissolved hydrocarbons are removed. The cleaned produced water is either discharged into the sea or injected ($\simeq$ 120–200 bar) for maintaining the reservoir pressure. Gas flaring and venting is subject to stricter regulations on the North and Norwegian Seas [7, 17], and these emissions are less and less frequent.

2.1.2. Case study

This work deals with the analysis of an existing platform, located in the Norwegian Sea. It has been in production for about 20 years and is characterised by a decreasing oil and gas production (about 230 t/h of oil and 30 t/h of gas exported), and an increasing water extraction (1100 t/h). Seawater is lifted to meet the cooling requirements, at a rate of about 2300 t/h. About 63% is rejected to the environment and the remaining 37% is injected into the reservoir [18].

In theory, the baseline power demand of the oil and gas processing plant could be satisfied by a single gas turbine. However, in order to prevent unexpected shut-down, two gas turbines are run at slightly less than 50% load, while a third one is on standby (model SGT-500) [19, 20]. Fuel gas is additionally consumed in two other gas turbines which are exclusively dedicated to the water injection pumps. The heating demand of the processing plant itself amounts to 4 MW and is ensured by waste heat recovery from the turbine exhausts ($\geq$ 330 °C) and electric heating. Heating is required for enhancing the oil and gas separation, as well as for condensate stabilisation purposes [21].

The present study aims at analysing the possibilities for integration of a steam cycle on this specific facility. The integration of a steam cycle may result in a smaller fuel consumption and in a greater power reserve, which would be useful in the case that more power is required in future operations.

2.1.3. Retrofit scenarios

Several scenarios can be drawn when integrating a steam cycle, depending on, for instance, the selection of the cold utility. Three potential heat sinks can be identified: (i) seawater at about 8 °C, which needs to be lifted into the water distribution network, (ii) cooling water from the process, which is treated seawater already available on-site at about 17 °C, and (iii) produced water from the oil extraction, at a temperature of about 65 °C. These scenarios are included in a superstructure in which all the possible technologies are embedded (Figure 2).

2.2. Thermo-environomic modelling and optimisation

This work follows a design and optimisation methodology that has been applied for the conception of, among all, hydrogen processes [23] and biomass conversion processes [24]. The aim is to derive the system configurations that, for example, simultaneously minimise the economic costs and maximise the internal heat recovery [22]. The problem includes discrete and continuous variables, as well as linear and non-linear relationships among them. It is therefore a MINLP (Mixed Integer Non-Linear Programming) problem, decomposed hereby into two sub-problems, namely a *master* and a *slave* (Figure 3). This decomposition allows for a more robust and faster optimisation. The slave problem consists of the energy integration optimisation problem, whose purpose is to determine the most suitable combination of the utilities (e.g. cooling water and exhaust gases), while minimising the total operating costs.

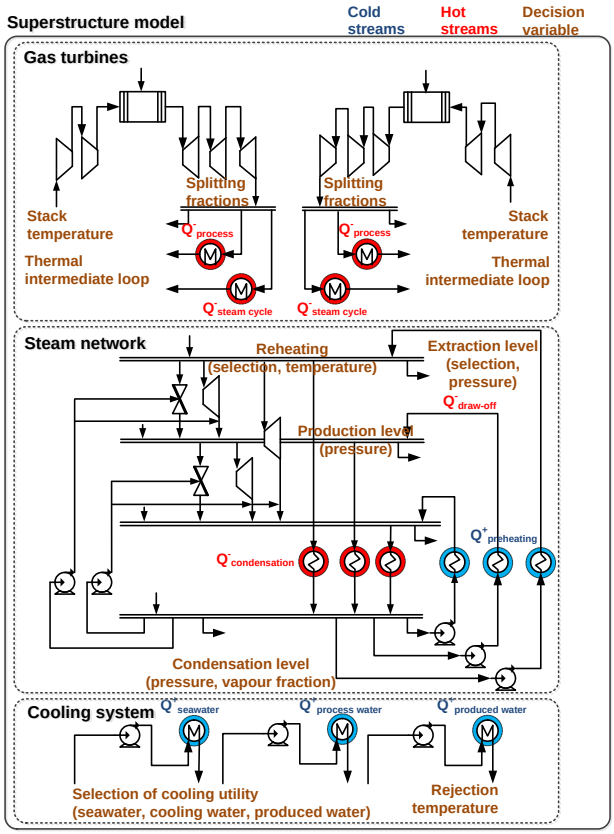

Fig. 2: Superstructure of the steam cycle integration with the gas turbines and cooling systems, adapted from [22].

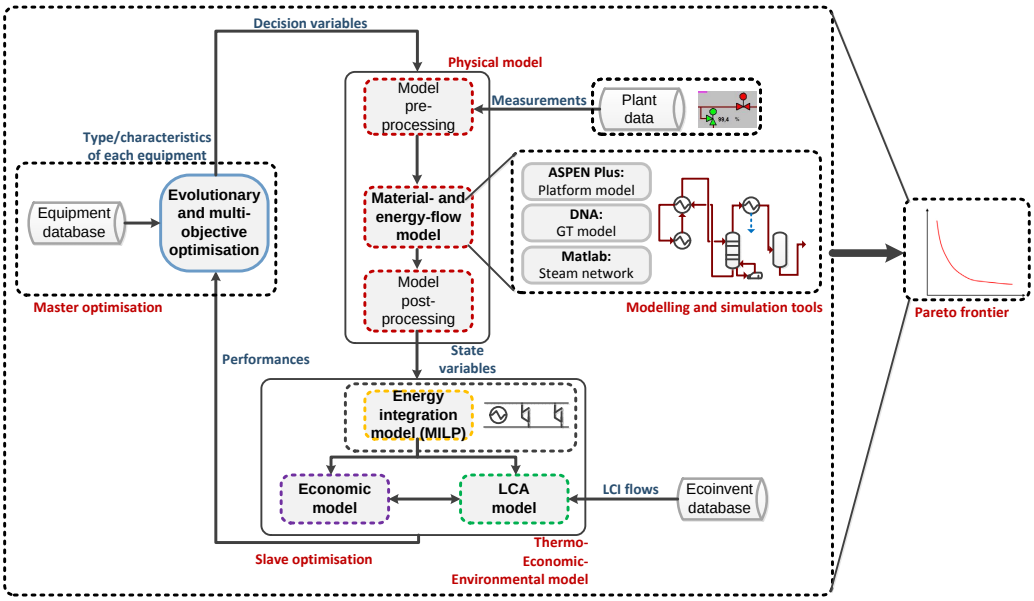

Fig. 3: Illustration of the applied methodology and computational framework, adapted from [23, 25]

First, a *physical model* of the system under study is developed: it builds on a superstructure including all the different technological options and uses process simulation software to calculate the energy and material flows, for a predefined set of operating conditions. The process simulations were carried out with Aspen Plus® version 7.2 [26] using the Peng-Robinson (PR) equation of state (EOS) [27].

Since the facility is operated on different operating modes, the part-load behaviour of the gas turbines and steam cycle should be entered as input data in the process design framework, in order to predict the possible fuel savings and reductions in CO_2-emissions. The gas turbine off-design characteristics were derived following the method described in Stodola [28] and in Traupel [29].

The software Aspen Plus® for modelling the processing plant, as it already includes data-banks for the chemical compounds present in the oil and gas phases, and as it is widely used in the petrochemical industry. The modelling of the gas turbine was conducted using the software DNA (Dynamic Networks Analysis) [30] because of its higher accuracy, as it was shown by a comparison with the data from the manufacturers.

The resulting state variables and flows are processed, in a second step, in an *energy- and process integration model*, which is developed on the Matlab platform [31]. The opportunities for heat recovery and co-generation are assessed and the system interactions are optimised, with regards to the minimum operating costs. This model is embedded in a slave sub-problem, which is a MILP (Mixed Integer Linear Programming) problem , subject to the thermodynamic constraints related to the heat cascades, and for which the decision variables are the utilisation factors of each technology defined in the superstructure [32]. The interactions between each sub-system or utility within the overall system are evaluated by means of the integrated composite curves [33].

The data returned by these physical- and energy-integration models are further processed in a post-calculation step, where an economic and environmental evaluation is performed. The costs of the different equipments are estimated based on the capacity-based correlations presented in Turton et al. [34] and the assumptions presented in Table 1. The dry weight of the steam cycle is calculated based on the estimations of Nord and Bolland for offshore steam cycles [11].

The overall thermodynamic, economic and environmental performance is then evaluated based on user-defined indicators, and a multi-objective optimisation is performed [35, 36]. The competing objectives and resulting trade-offs are identified, and the optimal system configurations are illustrated in the form of a Pareto frontier.

Table 1: Assumptions for the evaluation of the process economics.

Parameter	Value
Marshall and Swift index	1473.3
Expected lifetime [years]	30
Interest rate [%]	10
Yearly operation [h/year]	8000
CO_2-tax (Norway) [NOK/t_{CO_2}] [18]	410
Conversion factor [NOK/$]	0.16

2.2.1. Performance indicators

Several indicators characterising the performance of the utility plant solely and of the overall plant can be defined to compare the several scenarios.

Thermodynamic indicators The performance of the overall plant is assessed by the energy intensity of the oil and gas facility, which is an indicator widely used in the oil and gas industry [17, 37]. It is defined as the ratio of the energy used on-site to the energy exported to the shore with oil and gas:

$$\sigma = \frac{\Delta h^0_{\mathrm{FG}} \cdot \dot{m}_{\mathrm{FG}}}{\Delta h^0_{\mathrm{OIL}} \cdot \dot{m}^-_{\mathrm{OIL}} + \Delta h^0_{\mathrm{GAS}} \cdot \dot{m}^-_{\mathrm{GAS}}} \tag{1}$$

where Δh^0 stands for the lower heating value, and $\dot{m}$ the corresponding mass flow.

The performance of the combined cycle solely is assessed by calculating the energy efficiency η_{CC}, defined as:

$$\eta_{\mathrm{CC}} = \frac{\dot{Q}^- + \dot{W}^-}{\Delta h^0_{\mathrm{FG}} \cdot \dot{m}^+_{\mathrm{FG}}} \tag{2}$$

where $\dot{Q}$ and $\dot{W}$ represent the energy transfers with heat and power. The superscripts $^+$ and $^-$ illustrate the input and output flows. This definition considers that the heat output is useful, as it is the case for a combined cycle with heat extraction, i.e. for a combined heat and power utility plant.

Alternatively, the thermodynamic performance can also be assessed by calculating the exergy efficiency $\varepsilon_{\mathrm{CC}}$, defined as:

$$\varepsilon_{\mathrm{CC}} = \frac{\dot{E}^-_{\mathrm{Q}} + \dot{E}^-_{\mathrm{W}}}{\Delta k^0_{\mathrm{FG}} \cdot \dot{m}^+_{\mathrm{FG}}} \tag{3}$$

where $\dot{E}^-_{\mathrm{Q}}$ and $\dot{E}^-_{\mathrm{W}}$ represent the exergy transfers with heat and power, and Δk^0_{FG} the specific exergy of the fuel gas.

Economic indicators The economic aspects are assessed by calculating the additional investment costs C_{inv}, associated with the steam cycle integration, and the higher profits, related to the reduction of the CO_2-emissions and the savings in fuel gas consumption.

The operating costs are related to (i) the additional cooling water and pumping demands on-site for the steam condensation, (ii) the equipment maintenance costs, (iii) the money savings with the reductions of CO_2-taxes, (iv) the money earnings with the increases of gas sales.

The fuel gas has a lower quality than the exported gas, as it has not been dehydrated and purified in the last compression stages. The economic value of these gas streams is difficult to estimate, as the exported gas may be mixed with gases and condensates from other facilities, with different characteristics, and must be further treated and refined onshore before being sold on the market.

Moreover, the increase of the amount of gas exported to the shore is *not* equal to the reduction in the amount of fuel gas. The marginal increase of export gas is estimated, based on the operating data and simulations, to 0.98 kg per kg of fuel gas.

It is then assumed that the integration of a steam cycle into an existing offshore plant does neither result in an increase of the number of operators, nor in a higher operator's salary. The additional operating costs can therefore be neglected, and the economic performance of the steam cycle integration can be assessed with regards to the potential fuel gas savings and reductions in CO_2-taxes. The profitability of the steam cycle integration is therefore assessed by the relative increase in exported gas δ_{NG}, which is expressed as:

$$\delta_{\mathrm{NG}} = \frac{\dot{m}_{\mathrm{NG}} - \dot{m}_{\mathrm{NG,ref}}}{\dot{m}_{\mathrm{NG,ref}}} \tag{4}$$

Environmental indicators

The reduction of the local CO_2-emissions can be expressed as:

$$\delta_{I_{\mathrm{CO_2}}} = \frac{I_{\mathrm{CO_2}} - I_{\mathrm{CO_2,ref}}}{I_{\mathrm{CO_2,ref}}} \tag{5}$$

where $I_{\mathrm{CO_2}}$ denotes the local CO_2-emissions of the reference and investigated scenarios, respectively, per unit of oil and gas exported to the shore.

2.2.2. Multi-objective optimisation

The trade-off between several competing factors is evaluated by performing a MOO (multi-objective optimisation), based on an evolutionary algorithm, which is, in this case, a genetic algorithm. This technique is preferred compared to standard conventional algorithms, because a population of points is generated at each iteration, rather than a single point. This population represents potential solutions, and each represents a different trade-off between the optimisation objectives. The best points in this population are selected as they approach an optimal solution.

The list of solutions is then displayed on a Pareto front, on which a better-off with respect to one objective results in a worse-off for another one. Genetic algorithms are more suitable for solving problems in which the parameters and objective functions are non-linear, non-continuous, and non-modal [35], as this is the case in the present study.

The steam cycle operating parameters and strategy, the selection of the cold and hot utilities, and the implementation of a heating loop are defined as master decision variables to ensure that all possible configurations are explored during the optimisation phase (Table 2).

The large variety of performance indicators that can be considered as objectives illustrates that optimal decisions need to be taken with regards to trade-offs between two or more competing objectives. An example is the trade-off between the thermodynamic efficiency of the utility plant, which is improved with the integration of a steam cycle, and the investment costs, which rise because of the greater equipment inventory. The following three objectives are considered:

1. the net power generation of the utility system, which includes the combined cycle and the associated pumping utilities, to be maximised, so that the combined cycle has the capacity to cover the power demand in the different operation modes of the plant;

2. the investment costs C_{inv} of the additional bottoming cycle, to be minimised;

3. the daily local CO_2-emissions, to be minimised. The economic value of the exported gas is difficult to estimate, but maximising the annual profit is equivalent to maximising δ_{NG} and $\delta_{I_{\mathrm{CO_2}}}$ simultaneously.

3. Results and discussion

3.1. Current situation

The current system configuration, with the corresponding fuel gas consumption and environmental impact, is taken as reference scenario to which the other configurations are compared. Both the

Table 2: Set of the master decision variables used in the multi-objective optimisation of the steam cycle.

Variable	Type	Unit	Range/Value
Production level	continuous	bar	[90–130]
Degree of superheating	continuous	K	[0–50]
Selection of reheating	integer	-	[0;1]
Reheating level	continuous	K	[300–523]
Selection of 2nd production level	integer	-	[0;1]
2nd production level	continuous	bar	[90–130]
Selection of extraction level	integer	-	[0;1]
Extraction level	continuous	K	[300–523]
Condensation level	continuous	K	[298–343]
Vapour fraction (turbine outlet)	continuous	-	[0.8–1]
Selection of seawater	integer	-	[0;1]
Selection of processed cooling water	integer	-	[0;1]
Selection of produced water	integer	-	[0;1]
Selection of thermal intermediate loop	integer	-	[0;1]
Rejection temperature	continuous	K	[281–318] (seawater)
	continuous	K	[288–318] (processed cooling water)
	continuous	K	[338–368] (produced water)
Use of exhaust gases from the 2nd GT	integer	-	[0;1]
Exhaust temperature (after SC)	continuous	K	[393–453]
Gas turbine load for the SC design point	continuous	%	[40–100]
Power share between the CC and the 2nd GT	continuous	%	[50–90]

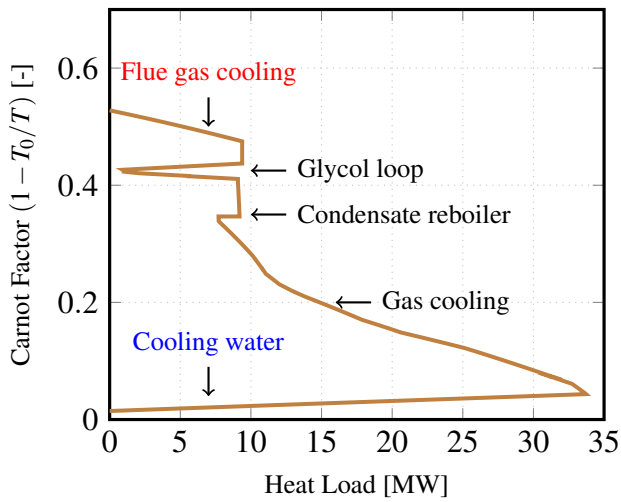

Fig. 4: Balanced Grand Composite Curve of the offshore plant.

electrical and heating demands are met by running the gas turbines on-site, and by recovering the waste heat from the exhaust gases on three of them.

The MER (minimum energy requirement) for external heating are smaller than 2 MW, whilst they amount to more than 25 MW for external cooling. The GCC of the process streams together with the utilities, i.e. the BGCC (Balanced Grand Composite Curve) reveals the significant exergy destruction taking place in the heat exchanges between the gas turbine exhausts, the process streams, and the intermediate glycol loop used in-between. The exergy destruction and losses associated to the heat exchange system are related to the area between the BGCC and the temperature-Carnot axis. This available exergy located below the utility pinch at about 600 K can be partly converted into mechanical power by integrating a steam cycle. Moreover, a greater fraction of the sensible heat and physical exergy from the exhaust gases can be recovered by allowing a lower rejection temperature. The environmental assessment of this facility indicates that the total CO_2-emissions amount to about 450 tons per day, of which more than 90% are associated with the natural gas consumption in the two SGT-500 gas turbines currently operated and in the other gas turbines. Emissions caused by flaring and venting are negligible.

3.2. Optimal configurations

The possible configurations of the steam network are analysed with respect to energetic, economic and environmental criteria. All the solutions displayed on the Pareto-optimal frontier (Figure 5) are based on (i) the use of the cooling water recovered from the processing plant at about 16.5 °C, and on, in a few cases, (ii) the lift of additional seawater on-site.

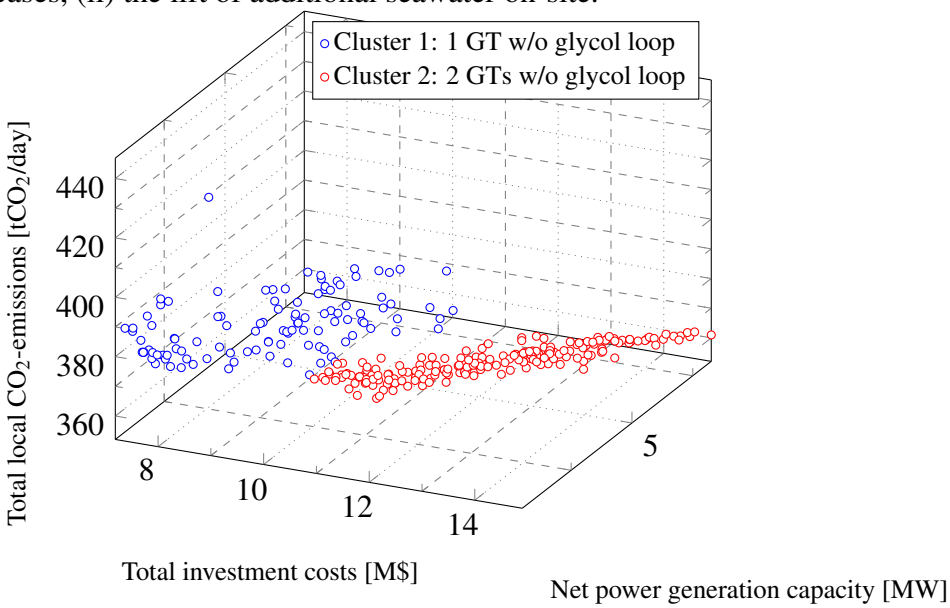

Fig. 5: Pareto-optimal solutions for the site-scale integration of steam cycles on offshore platforms: trade-off between the investment costs, CO_2-emissions and net power capacity.

The design setups, in which only seawater at 8 °C is used, are discarded. This illustrates that the benefits of using a cold source at such a low temperature are outweighed by the additional power consumption to bring this water on-site, and the supplementary costs for installing water lift pumps. Similarly, the configurations where only the produced water from the oil and gas plant is processed are not taken into account. The inlet temperature ($\simeq$ 60–70 °C) of this potential utility results in severe limitations on the condensation temperature and on the power generation capacity of the steam cycle, and such solutions are thus sub-optimum.

None of all the optimal design setups shown on the Pareto frontier include reheating or an additional production level. This suggests that the relatively low temperature of the heat source (exhaust gases at about 330 °C) does not favour the use of more than one production (evaporation and superheating) and utilisation (condensation) level. Finally, solutions with an intermediate extraction level are not considered, as the thermodynamic benefits of such solutions are negligible in comparison to the economic penalties induced by a higher system complexity.

The following conclusions can be drawn from the dispersion of the optimal solutions on the thermo-environomic Pareto frontier. Firstly, the daily CO_2-emissions and net power generation capacity respectively decrease and increase with higher investment costs, when the waste heat from the exhaust gases of only one gas turbine is recovered. Secondly, when the waste heat from the exhaust gases of two gas turbines is used, the total CO_2-emissions cannot be decreased further down than 360 tonnes per day, and an increase of the investment costs only results in an increase of the net power generation capacity. This trend illustrates that the steam cycle is not run at its design point or maximum capacity. The increase of the power capacity of the steam cycle is performed at the expense of a lower thermodynamic efficiency of the combined cycle at their actual operating point.

Despite the numerous possible configurations embedded in the steam network superstructure, the optimal solutions are distributed in four different clusters, and an example of configuration for each cluster is further studied (Table 3). These four clusters differ by the activation or deactivation of the glycol loop, and by the possible use of the waste heat contained in the exhaust gases from the second gas turbine.

The integrated composite curves of the steam cycle (Figure 6) highlight the thermodynamic benefits of this integration.

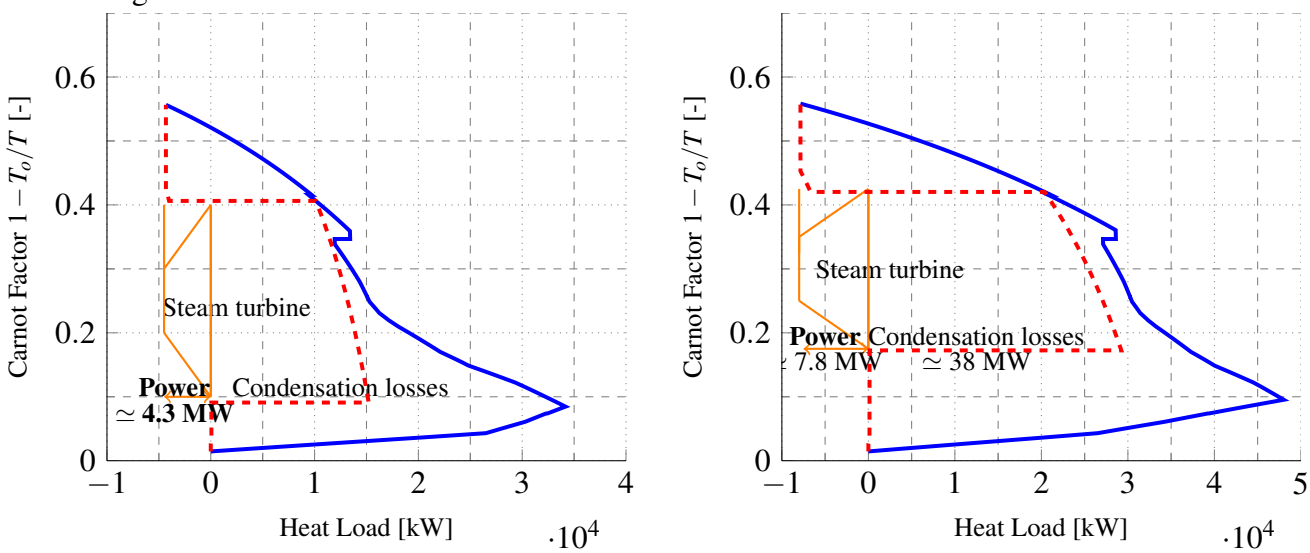

Fig. 6: Integrated Composite Curves (ICC) of the steam network for an optimum case of Cluster 1 (Configuration A) and Cluster 2 (Configuration B)

- **Cluster 1**: The steam cycle is integrated with the exhaust gases coming from only one of the two gas turbines. The glycol loop is dismantled and process cooling water is used. The total investment costs vary between 7.2 and 11.7 M$, the net power capacity at the design point of the steam cycle between 490 kW and 4600 kW, the daily CO_2-emissions down to 370 tons per day. This corresponds to a reduction of the CO_2-emissions of up to 15% at the scale of the utility plant, and up to 14% at the scale of the overall facility. Moreover, this corresponds to an

Table 3: Selection of thermo-environomic optimal configurations. - stands for non-relevant, y for included, n for not-included, and * for the gas turbine characteristics, before integration of the steam cycle.

Case Steam cycle		Reference	A	B
Parameters (design point)				
Production level	[bar]	-	15.6	19.7
Superheating	[ΔK]	-	15.1	28.9
Reheating		-	n	n
Extraction		-	n	n
Seawater		-	n	n
Process water		-	y	y
Produced water		-	n	n
Glycol loop		y	n	n
Condensation level	[bar]	-	0.07	0.29
Vapour fraction (turbine outlet)	[-]	-	0.86	0.85
Gas turbines		-	1	2
Stack temperature	[°C]	330	173	174
Seawater rejection temperature	[°C]	-	-	
Process water rejection temperature	[°C]	16.5	29.8	33.5
Power share between the CC and the 2nd GT	-	-	54.5	75.0
Power production [design point]				
Steam network generation	[kW]	-	4320	7840
Pumping consumption	[kW]	-	0	0
Net power generation	[kW]	-	4320	7840
Thermodynamic performance				
ε_{cc} [steam cycle design point]	[-]	32.1*	32.5	36.7
η_{cc} [steam cycle design point]	[-]	33.7*	34.1	38.5
η_{cc} [operating point]	[-]	23.3*	31.2	30.4
σ	[%]	4.6	4.1	3.4
Economic evaluation				
Investment costs	[M$]	-	11.6	15.1
δ_{NG}	[%]	0	9.5	20.3
Environmental impact				
Daily emissions	[tons/day]	450	398	362
$\delta_{I_{CO_2}}$	[%]	0	8.7	16.9
Other characteristics				
Dry weight	[tons]	-	43	78

increase of the natural gas exportations by up to 18%. The rejection temperatures of the cooling water range between 300 and 310 K and the exhaust gas temperatures between 420 and 430 K.

The combined cycle setup of the configuration A (Figure 6) reduces clearly the heat losses associated with the rejection of the flue gases from the power turbines, as well as the exergy losses at high temperature. It results in a power production of more than 4 MW, but a significant potential for exergy recovery can be pointed out at low temperatures ($\leq$ 375 K). The integration of the steam network actives a new utility pinch point, which is caused by the heating demand of the condensate reboiler at about 420–430 K.

- **Cluster 2**: The steam cycle is integrated with the exhaust gases coming from the two gas turbines, and the exhaust gases are directly used for meeting the requirements of the processing plant. The investment costs are on average greater by about 20% compared to the previously proposed solutions, but the net power capacity is greatly enhanced, ranging from 2100 to 8260 kW. The daily CO_2-emissions decrease by about 20–30 tons per day compared to the two optimal solutions of the two first clusters. The total savings, compared to the baseline case, can reach up to 60–80 tons per day. The rejection temperatures of the cooling water and exhaust gases are sensibly similar to the ones in the first cluster of solutions.

  The implementation of the steam cycle on the two main gas turbines, for the configuration B, results in a greater amount of heat and exergy available between 420 and 620 K. Steam production takes place at a higher pressure level, in comparison to the previous case, and the utility pinch point between the condensate reboiler and the steam network is not activated. Steam condensation takes place at a relatively high pressure (0.29 bar), and could, in theory, take place at a lower pressure. This case illustrates nevertheless the trade-off between the power capacity of the steam cycle, which would be increased for a lower condensation level, and the economic investment, which would be increased, since the steam turbine would have a higher size.

4. Conclusions

The optimal integration of steam cycles on oil and gas platforms is evaluated with regards to their energy and exergy performances, their investment and operating costs, and their environmental impacts. The comparison of all potential configurations is conducted by combining a superstructure process model with process integration techniques and multi-objective optimisations.

The trade-offs between conflicting objectives such as low investment costs, high fuel savings & CO_2-reductions, and high power generation capacity are assessed. The potential for an additional increase of the power generation capacity of the platform goes up to 8.5–9.5 MW, depending on the choice of the cold and hot utilities. Based on the assumptions made in this work, the investment costs vary in the range of 7–17 M$, while the CO_2-emissions range between 260 and 350 tons per day.

The plant with the greatest power capacity displays a net power production of about 9.5 MW for about 260 tons of carbon dioxide emitted per day. Substantial exergy pockets are found at temperatures as low as 20–80 °C, and they can most likely be exploited by integrating a low-temperature power cycle.

In conclusion, we suggest to apply the present methodology to other and similar systems, and to evaluate the impact of operational constraints on the integration possibilities of steam cycles on oil platforms.

Acknowledgments

The funding from the Norwegian Research Council through the Petromaks programme, within the project 2034/E30 led by Teknova is acknowledged.

Nomenclature

+	Material-/Energy-flow entering the system
-	Material-/Energy-flow leaving the system
EOS	Equation of State
FG	Fuel gas
GE	Exported gas
GWP	Global Warming Potential
IPCC	Intergovernmental Panel on Climate Change
LCA	Life Cycle Assessment
LCI	Life Cycle Inventory
MILP	Mixed Integer Linear Programming
MOO	Multi-Objective Optimisation
OE	Exported oil
PR	Peng-Robinson
Δh^0	Heating value, kJ/kg
$\dot{m}$	Mass flow, kg/s or t/h
p	Pressure, bar
Q	Heat, kW
T	Temperature, °C or K
W	Work, kW

References

[1] Francis S. Manning and Richard E. Thompson. *Oilfield processing of petroleum: Crude oil*, volume 2. PennWell Books, Tulsa, USA, 1991.

[2] H. K. Abdel-Aal, Mohamed Aggour, and M. A. Fahim. *Petroleum and Gas Field Processing*. Chemical Industries. Marcel Dekker, New York, USA, 2003.

[3] William C. Lyons Plisga and Gary J., editors. *Standard Handbook of Petroleum & Natural Gas Engineering*. Gulf Professional Publishing, Burlington, USA, second edition, 2004.

[4] David S. J. "Stan" Jones and Peter R. Pujadó, editors. *Handbook of Petroleum Processing*. Springer, Dordrecht, The Netherlands, 2006.

[5] Stortinget. Lov om petroleumsvirksomhet [petroleumsloven]. Technical Report 72, OED (Olje- og energidepartementet), 29 November 1996.

[6] Statistisk Sentralbyrå. Lavere klimagassutslipp i 2011, 2012.

[7] Oljedirektoratet. Nei til fakling – en internasjonal utfordring, 2008.

[8] Finansdepartementet. Skatter og avgifter: green taxes, 2011.

[9] Pål Kloster. Energy Optimization on Offshore Installations with Emphasis on Offshore and Combined Cycle Plants. In *Proceedings of the Offshore Europe Conference*, pages 1–9 (Paper SPE 56964), Aberdeen, United Kingdom, 1999. Society of Petroleum Engineers.

[10] Pål Kloster. Reduction of Emissions to Air Through Energy Optimisation on Offshore Installations. In *Proceedings of the SPE International Conference on Health, Safety, and the Environment in Oil and Gas Exploration and Production*, pages 1–7 (Paper SPE 61651), Stavanger, Norway, 2000. Society of Petroleum Engineers.

[11] L. O. Nord and O. Bolland. Steam bottoming cycles offshore – challenges and possibilities. *Journal of Power Technologies*, 92(3):201–207, 2013.

[12] Lars O. Nord and Olav Bolland. Design and off-design simulations of combined cycles for offshore oil and gas installations. *Applied Thermal Engineering*, 54:85–91, 2013.

[13] Harald Taxt Walnum, Petter Nekså, Lars O. Nord, and Trond Andresen. Modelling and simulation of CO_2 (carbon dioxide) bottoming cycles for offshore oil and gas installations at design and off-design conditions. *Energy*, 59:513–520, 2013.

[14] Jiři Jaromír Klemeš, Vikas R. Dhole, K. Raissi, Simon J. Perry, and Luis Puigjaner. Targeting and design methodology for reduction of fuel, power and CO_2 on total sites. *Applied Thermal Engineering*, 7(8-10):993–1003, 1997.

[15] F. Marechal and B. Kalitventzeff. Targeting the integration of multi-period utility systems for site scale process integration. *Applied Thermal Engineering*, 23(14):1763–1784, 2003.

[16] K.H. Chew, J.J. Klemeš, S.R. Wan Alwi, and Z. Abdul Manan. Industrial implementation issues of total site heat integration. *Applied Thermal Engineering*, 2013.

[17] Robin Vanner. Energy Use in Offshore Oil and Gas Production: Trends and Drivers for Efficiency from 1975 to 2025. PSI Working Paper, Policy Studies Institute, 2005.

[18] Norwegian Ministry of Petroleum and Energy. Facts 2012 – The Norwegian Petroleum Sector. Technical report, Norwegian Petroleum Directorate, Oslo, Norway, 2012.

[19] L. Pierobon, Rambabu Kandepu, and F. Haglind. Waste Heat Recovery for Offshore Applications. In *Proceedings of the ASME 2012 International Mechanical Engineering Congress and Exposition*, volume 6: Energy, Parts A and B, pages 503–512. ASME, November 2012.

[20] SIEMENS. SGT-500 Industrial Gas Turbine. Technical report, Siemens Industrial Turbomachinery AB, Finnspong, Sweden, 2011.

[21] K. J. Li. Use of a Fractionation Column in an Offshore Environment. In *Proceedings of the SPE Annual Technical Conference and Exhibition*, pages 1–11 (Paper SPE 49121), New Orleans, USA, 1996. Society of Petroleum Engineers.

[22] F. Maréchal and B. Kalitventzeff. Targeting the optimal integration of steam networks: Mathematical tools and methodology. *Computers and Chemical Engineering*, 23(SUPPL. 1):S133–S136, 1999.

[23] L. Tock and F. Maréchal. H_2 processes with CO_2 mitigation: Thermo-economic modeling and process integration. *International Journal of Hydrogen Energy*, 37(16):11785–11795, 2012.

[24] L. Gerber, M. Gassner, and F. Maréchal. Systematic integration of lca in process systems design: Application to combined fuel and electricity production from lignocellulosic biomass. *Computers and Chemical Engineering*, 35(7):1265–1280, 2011.

[25] S. Fazlollahi and F. Maréchal. Multi-objective, multi-period optimization of biomass conversion technologies using evolutionary algorithms and mixed integer linear programming (milp). *Applied Thermal Engineering*, 50(2):1504–1513, 2013.

[26] Aspen Technology. *Aspen Plus – Modelling Petroleum Processes*. Aspen Technology, Burlington, USA, 1999.

[27] Ding-Yu Peng and Donald B. Robinson. A New Two-Constant Equation of State. *Industrial & Engineering Chemistry Fundamentals*, 15(1):59–64, February 1976.

[28] Aurel Stodola. *Dampf- und Gasturbinen*. Springer, Berlin, Germany, sixth edition, 1924.

[29] Walter Traupel. *Thermische Turbomaschinen*. Springer, Berlin, Germany, third edition, 1977.

[30] Brian Elmegaard and Niels Houbak. DNA – A General Energy System Simulation Tool. In J. Amundsen, editor, *Proceedings of SIMS 2005 - 46th Conference on Simulation and Modeling*, pages 43–52, Trondheim, Norway, 2005. Tapir Academic Press.

[31] *Matlab ®Primer R2013b*. The MathWorks, 2013.

[32] F. Maréchal and B. Kalitventzeff. Energy integration of industrial sites: Tools, methodology and application. *Applied Thermal Engineering*, 18(11):921–933, 1998.

[33] F. Marechal and B. Kalitventzeff. Targeting the minimum cost of energy requirements: A new graphical technique for evaluating the integration of utility systems. *Computers and Chemical Engineering*, 20(SUPPL.1):S225–S230, 1996.

[34] Richard Turton, Richard C. Bailie, Wallace B. Whiting, Joseph A. Shaeiwitz, and Debangsu Bhattacharyya. *Analysis, Synthesis and Design of Chemical Processes*. Prentice Hall International Series in the Physical and Chemical Engineering Sciences. Prentice Hall, 4th edition, 2012.

[35] Geoffrey Basil Leyland. *Multi-objective optimisation applied to industrial energy problems*. PhD thesis, École Polytechnique Fédérale de Lausanne, 2002.

[36] A. Molyneaux. *A practical evolutionary method for the multi-objective optimisation of complex integrated energy systems including vehicle drivetrains*. PhD thesis, École Polytechnique Fédérale de Lausanne, 2002.

[37] Stig M. Svalheim. Environmental Regulations and Measures on the Norwegian Continental Shelf. In *Proceedings of the SPE International Conference on Health, Safety and Environment in Oil and Gas Exploration and Production*, pages 1–10 (Paper SPE 73982), Kuala Lumpur, Malaysia, 2002. Society of Petroleum Engineers.