View metadata, citation and similar papers at core.ac.uk

brought to you by CORE

provided by NASA Technical Reports Server

US010036700B2

(12) **United States Patent**
McElroy

(10) **Patent No.: US 10,036,700 B2**
(45) **Date of Patent: Jul. 31, 2018**

(54) **SIMULATION TOOL FOR DAMAGE IN COMPOSITE LAMINATES**

(71) Applicant: **The United States of America, as represented by the Administrator of the National Aeronautics and Space Administration**, Washington, DC (US)

(72) Inventor: **Mark W. McElroy**, Houston, TX (US)

(73) Assignee: **THE UNITED STATES OF AMERICA AS REPRESENTED BY THE ADMINISTRATOR OF NASA**, Washington, DC (US)

(*) Notice: Subject to any disclaimer, the term of this patent is extended or adjusted under 35 U.S.C. 154(b) by 0 days.

(21) Appl. No.: **15/526,369**

(22) PCT Filed: **Oct. 1, 2015**

(86) PCT No.: **PCT/US2015/053459**

§ 371 (c)(1),
(2) Date: **May 12, 2017**

(87) PCT Pub. No.: **WO2016/076965**

PCT Pub. Date: **May 19, 2016**

(65) **Prior Publication Data**

US 2017/0322145 A1 Nov. 9, 2017

Related U.S. Application Data

(60) Provisional application No. 62/079,182, filed on Nov. 13, 2014, provisional application No. 62/087,841, filed on Dec. 5, 2014, provisional application No. 62/166,319, filed on May 26, 2015.

(51) **Int. Cl.**
G01N 19/08 (2006.01)
G01N 3/00 (2006.01)

(52) **U.S. Cl.**
CPC ***G01N 19/08*** (2013.01); ***G01N 3/00*** (2013.01); *G01N 2203/0025* (2013.01); *G01N 2203/0066* (2013.01); *G01N 2203/0212* (2013.01); *G01N 2203/0216* (2013.01)

(58) **Field of Classification Search**
CPC .. G01N 19/08; G01N 3/00; G01N 2203/0025; G01N 2203/0066; G01N 2203/0212; G01N 2203/0216
USPC 73/799
See application file for complete search history.

(56) **References Cited**

U.S. PATENT DOCUMENTS

2002/0112548 A1* 8/2002 Dong B23K 31/02 73/850
2004/0148143 A1 7/2004 Deobald et al.
2006/0009951 A1 1/2006 Tryon et al.
2008/0172211 A1 7/2008 Sakai et al.
(Continued)

OTHER PUBLICATIONS

PCT International Search Authority and Written Opinion, PCT/US2015/53459, dated Dec, 28, 2015, 10 pages.

Primary Examiner — Max Noori
(74) *Attorney, Agent, or Firm* — Andrea Z. Warmbier; Robin W. Edwards; Mark P. Dvorscak

(57) **ABSTRACT**

A numerical simulation tool for progressive failure in laminates utilizes a low fidelity approach. The numerical model includes an enriched element that is initially in a low fidelity form. The enriched elements may increase fidelity by splitting locally to simulate an ongoing damage process such as delamination.

20 Claims, 8 Drawing Sheets

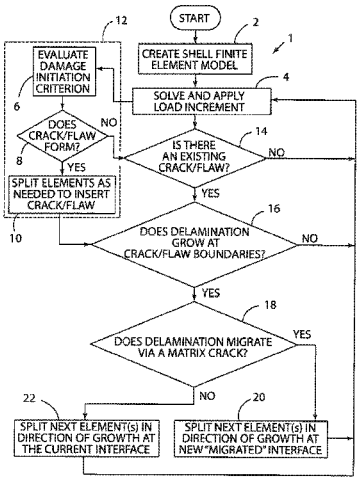

(56) **References Cited**

U.S. PATENT DOCUMENTS

2012/0265449	A1*	10/2012	Ihn	G01N 27/026 702/33
2014/0197848	A1*	7/2014	Gregoire	G01N 3/00 324/637
2014/0278291	A1	9/2014	Zheng et al.	
2015/0082855	A1*	3/2015	Fujii	G06F 17/5018 72/379.2
2016/0162616	A1*	6/2016	Hasan	G06F 17/5018 703/2
2017/0219471	A1*	8/2017	Fisk	G01N 3/08

* cited by examiner

Fig. 1

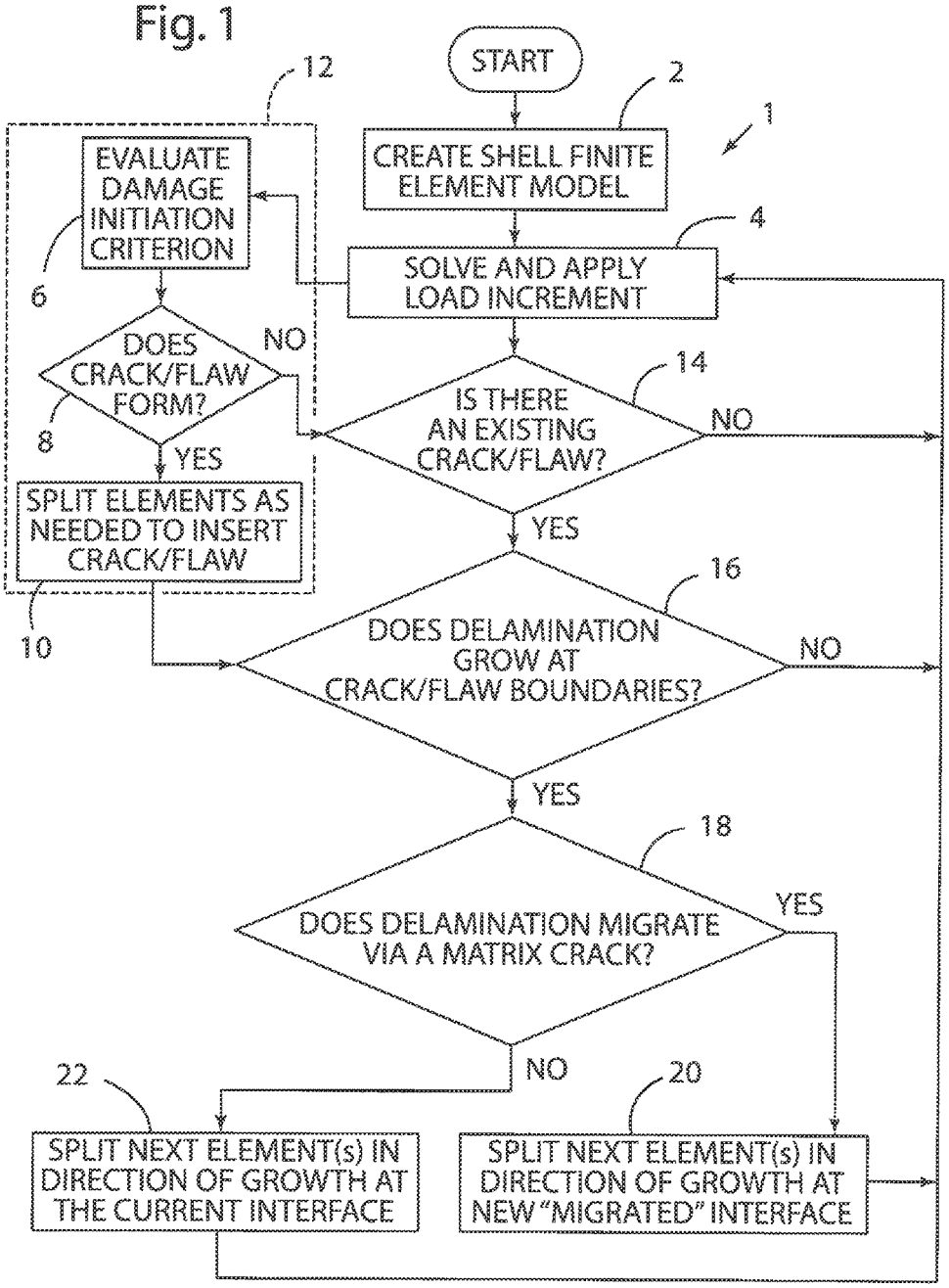
START
CREATE SHELL FINITE ELEMENT MODEL
SOLVE AND APPLY LOAD INCREMENT
EVALUATE DAMAGE INITIATION CRITERION
DOES CRACK/FLAW FORM?
NO
YES
SPLIT ELEMENTS AS NEEDED TO INSERT CRACK/FLAW
IS THERE AN EXISTING CRACK/FLAW?
NO
YES
DOES DELAMINATION GROW AT CRACK/FLAW BOUNDARIES?
NO
YES
DOES DELAMINATION MIGRATE VIA A MATRIX CRACK?
YES
NO
SPLIT NEXT ELEMENT(s) IN DIRECTION OF GROWTH AT THE CURRENT INTERFACE
SPLIT NEXT ELEMENT(s) IN DIRECTION OF GROWTH AT NEW "MIGRATED" INTERFACE
1
2
4
6
8
10
12
14
16
18
20
22

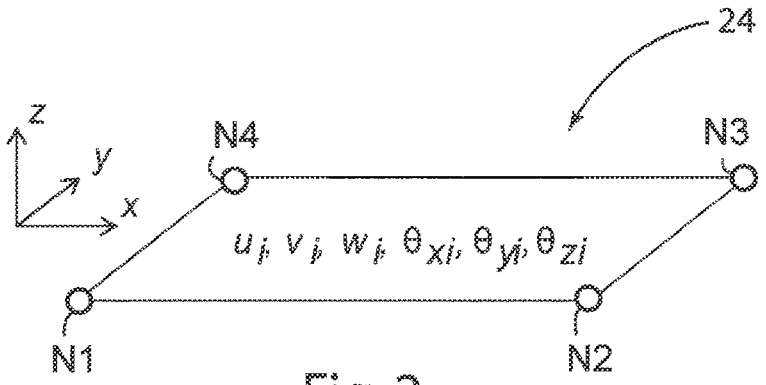

Fig. 2

Fig. 3

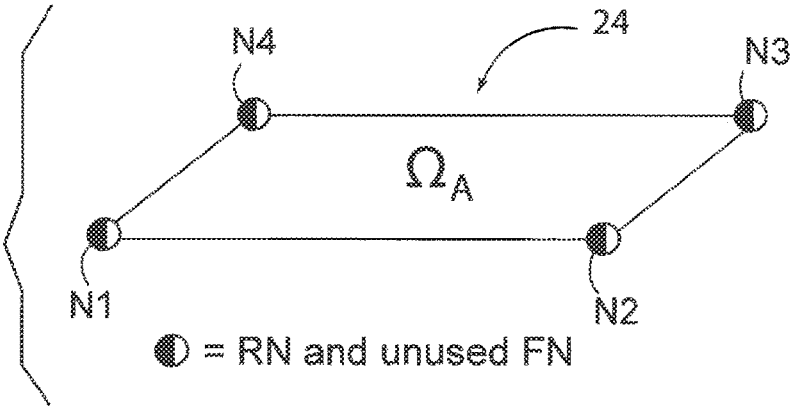

Fig. 4

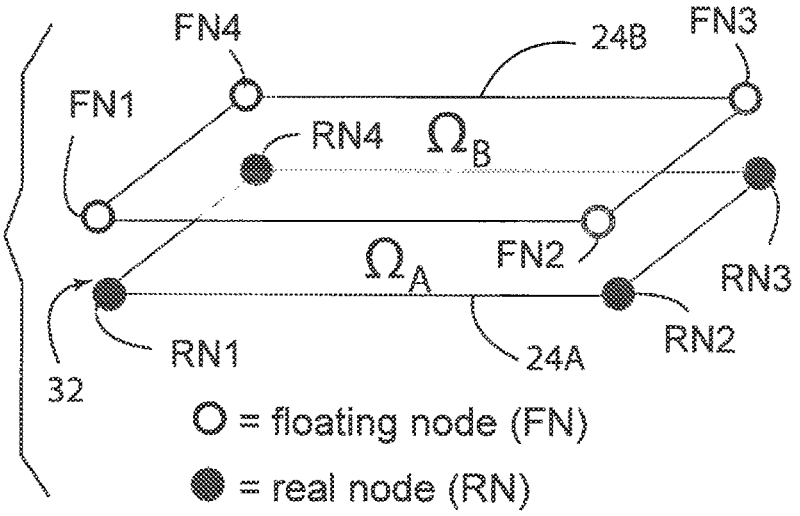

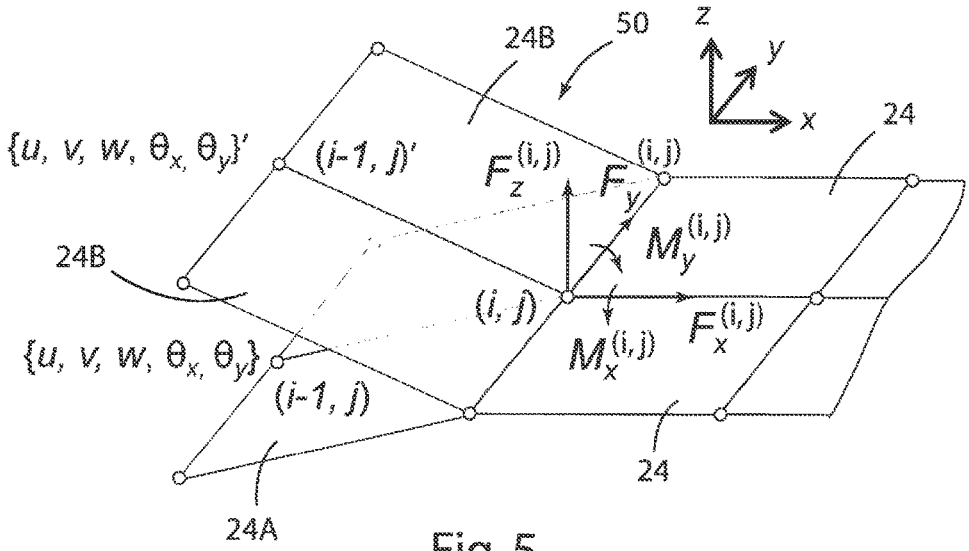
24B
50
z
y
x
24
{u, v, w, θx, θy}'
(i-1, j)'
F_z^(i,j)
F_y
(i, j)
M_y^(i,j)
24B
(i, j)
F_x^(i,j)
{u, v, w, θx, θy}
M_x^(i,j)
(i-1, j)
24
24A

Fig. 5

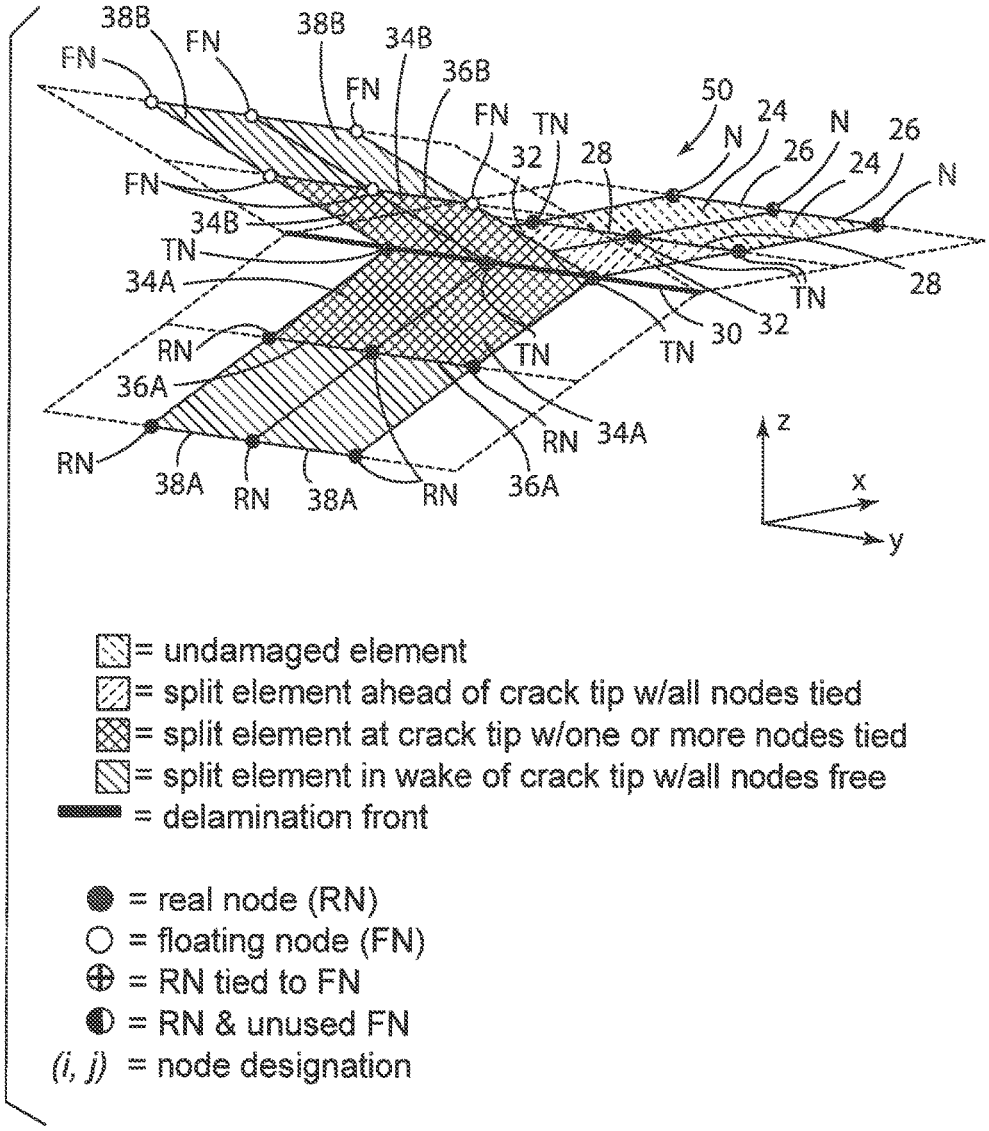
38B
FN
FN
38B
34B
36B
FN
FN
TN
50
24
N
26
N
26
24
N
32
28
FN
34B
TN
34A
28
TN
30
32
TN
RN
TN
TN
36A
34A
RN
RN
38A
RN
38A
RN
36A
z
x
y
= undamaged element
= split element ahead of crack tip w/all nodes tied
= split element at crack tip w/one or more nodes tied
= split element in wake of crack tip w/all nodes free
= delamination front
= real node (RN)
= floating node (FN)
= RN tied to FN
= RN & unused FN
(i, j) = node designation

Fig. 6

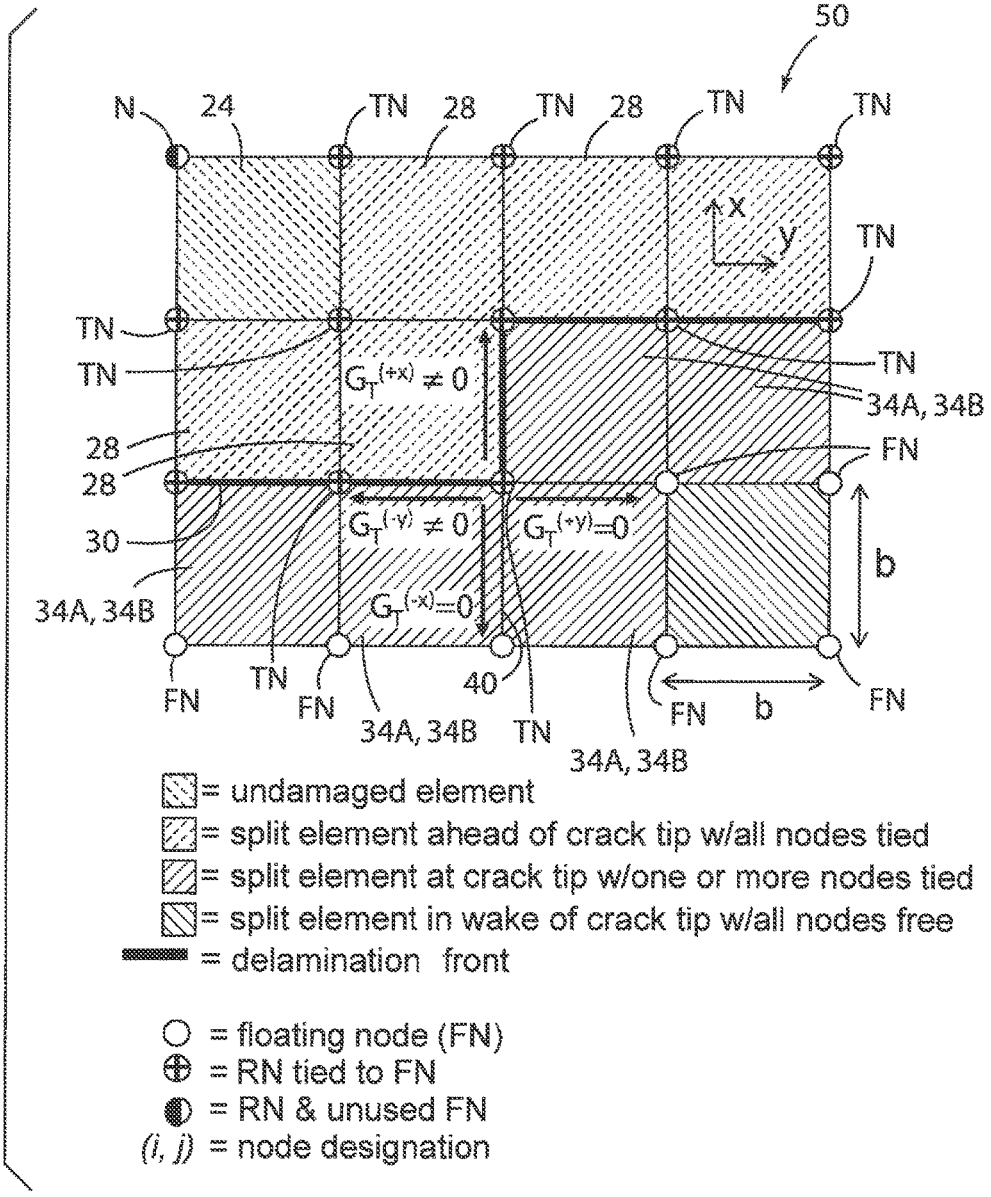
50
N
24
TN
28
TN
28
TN
TN
x
y
TN
TN
TN
TN
34A, 34B
$G_T^{(+x)} \neq 0$
28
28
FN
30
$G_T^{(-y)} \neq 0$
$G_T^{(+y)}=0$
b
34A, 34B
$G_T^{(-x)}=0$
FN
TN
FN
40
34A, 34B
TN
FN
b
FN
34A, 34B
= undamaged element
= split element ahead of crack tip w/all nodes tied
= split element at crack tip w/one or more nodes tied
= split element in wake of crack tip w/all nodes free
= delamination front
= floating node (FN)
= RN tied to FN
= RN & unused FN
(i, j) = node designation

Fig. 7

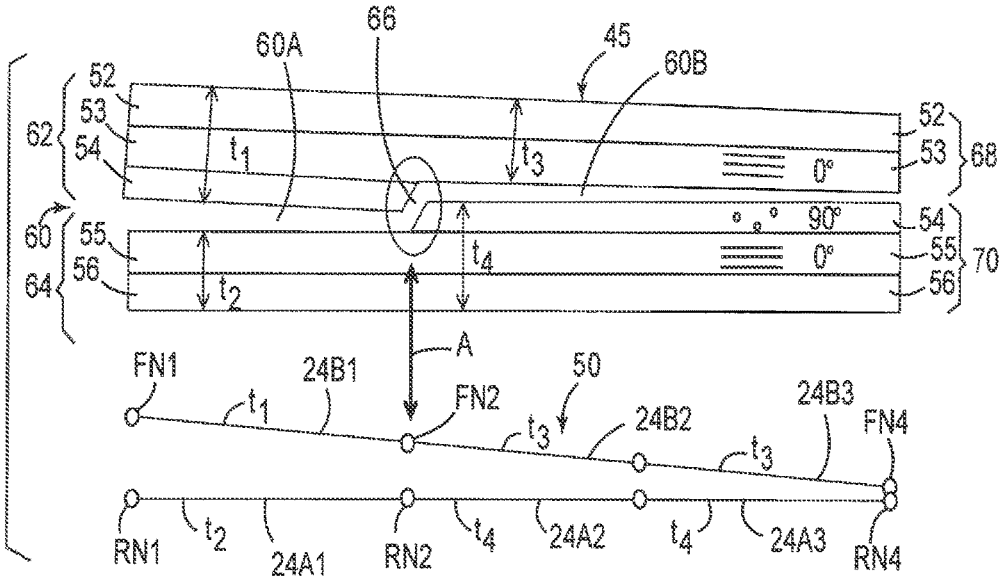
66
60A
45
60B
52
53
54
62
t_1
t_3
0°
52
53
68
90°
54
60
55
56
64
t_2
t_4
0°
55
56
70
A
FN1
24B1
50
FN2
24B3
FN4
t_1
t_3
24B2
t_3
RN1
t_2
24A1
RN2
t_4
24A2
t_4
24A3
RN4

Fig. 8

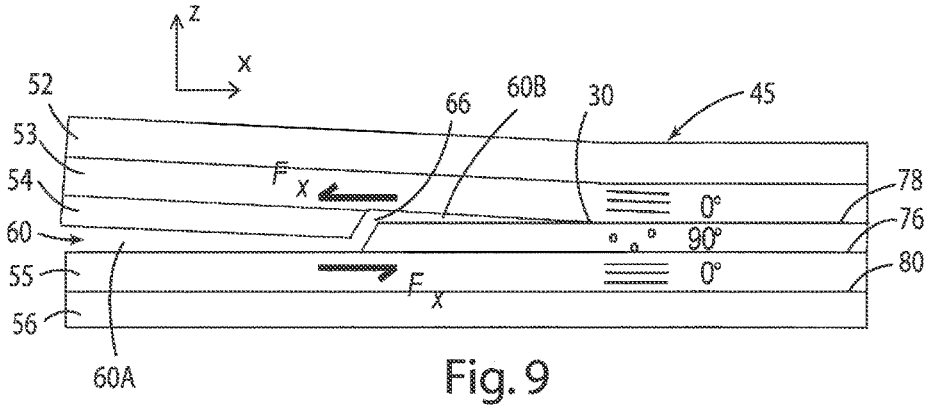
z
x
52
53
54
60
55
56
60A
66
60B
30
45
78
76
80
F_x
F_x
0°
90°
0°

Fig. 9

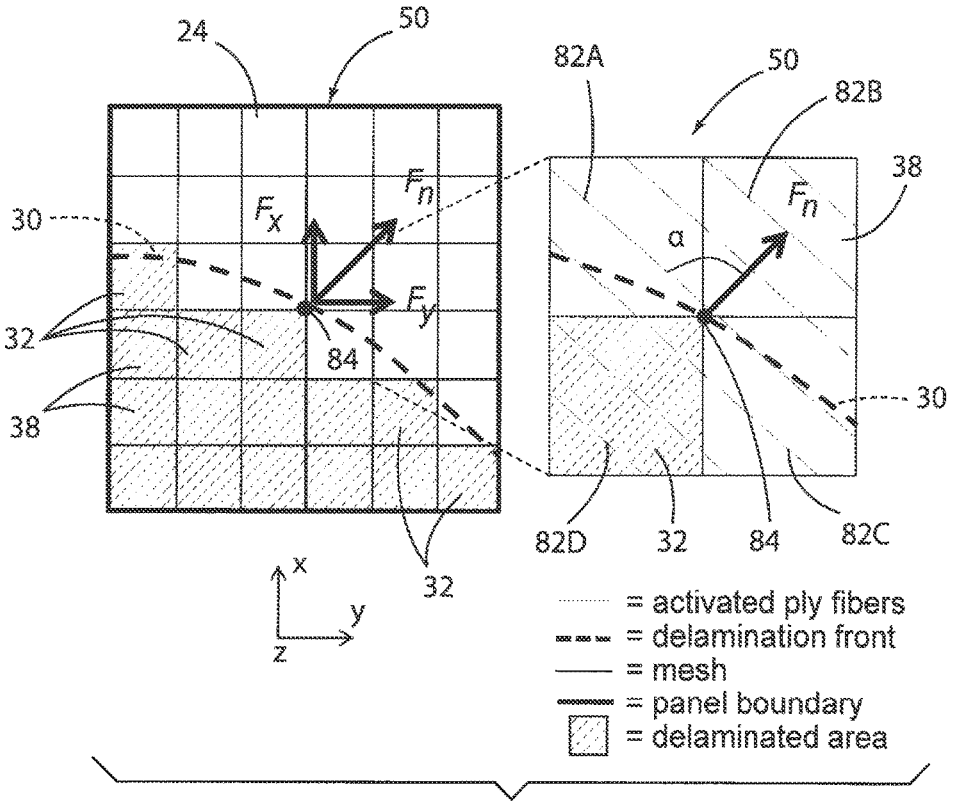
24
50
30
32
38
84
32
F_x
F_n
F_y
x
y
z
82A
50
82B
38
F_n
α
30
82D
32
84
82C
= activated ply fibers
= delamination front
= mesh
= panel boundary
= delaminated area

Fig. 10

Fig. 11

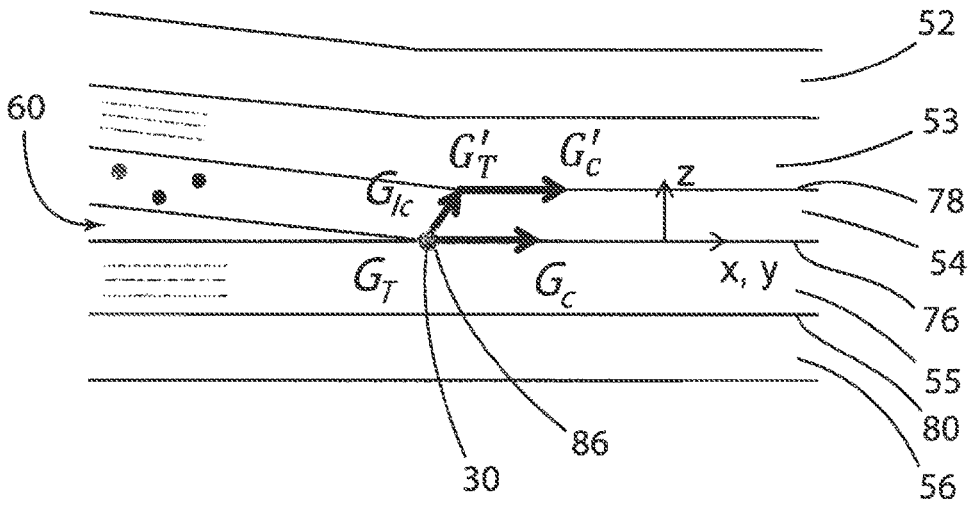

SIMULATION TOOL FOR DAMAGE IN COMPOSITE LAMINATES

CROSS-REFERENCE TO RELATED PATENT APPLICATIONS

This patent application claims the benefit of and priority to U.S. Provisional Patent Application No. 62/166,319, titled "SIMULATION TOOL FOR DAMAGE IN COMPOSITE LAMINATES" filed on May 26, 2015; U.S. Provisional Patent Application No. 62/087,841, titled "SIMULATION TOOL FOR DAMAGE IN COMPOSITE LAMINATES" filed on Dec. 5, 2014; and U.S. Provisional Patent Application No. 62/079,182, titled "SIMULATION TOOL FOR DAMAGE IN COMPOSITE LAMINATES" filed on Nov. 13, 2014. The entire contents of each of the above-identified provisional applications are hereby incorporated by reference in their entirety.

STATEMENT REGARDING FEDERALLY SPONSORED RESEARCH OR DEVELOPMENT

The invention described herein was made by an employee of the United States Government and may be manufactured and used by or for the Government of the United States of America for governmental purposes without the payment of any royalties thereon or therefore.

BACKGROUND OF THE INVENTION

Damage processes in laminates can be inherently complex. As a result, prior methods to simulate damage in composite laminates rely on high fidelity numerical (i.e., finite element) models. A primary disadvantage of prior high fidelity simulation models is that they can be cost inhibitive in terms of required user expertise, model development time, and computational resources. Often existing tools are not feasible for use outside of research or academic type environments because, even for consideration of a simple damage process in small structures, their use requires a high level of training and time. Furthermore, if a model becomes too high fidelity and involves too many interacting damage processes, there are more sources for error to appear and magnify. There are ways to mitigate these disadvantages such as dividing models of complex structures into component level models, or locally refining fidelity around the expected area of damage. However, in doing this, additional time and expertise is required, knowledge of expected behavior beforehand is required, and the model results can be influenced by the model creator. Difficulties associated with high fidelity models could be overcome if an accurate lower-fidelity simulation tool was available.

Accordingly, there is a need for a tool to simulate damage processes in composite laminates that is rapid and less demanding in terms of user expertise, model development time and computational resources, but of equal or similar accuracy and as a higher fidelity model.

BRIEF SUMMARY OF THE INVENTION

One aspect of the present invention is a numerical simulation tool for progressive damage in laminates. The simulation tool may utilize several numerical techniques (i.e., Floating Node Method (FNM), Virtual Crack Closure Technique (VCCT), finite element analysis) in connection with a developmental damage simulation theory in a manner necessary to fully capture the formation of a three dimensional

internal crack network in a laminate using a model composed of a low fidelity mesh of planar type finite elements (i.e., a shell element, a plate element, or similar finite element). Shell/plate elements are general in nature, easily usable, and computationally efficient. The model mesh remains low fidelity throughout an analysis and increases in fidelity only locally as needed to suit a damage process occurring throughout a solution procedure.

The tool can be used to simulate three dimensional laminate damage processes and is in the form of an enriched shell finite element. One component of the tool includes numerical representation in a finite element mesh of material and structural discontinuities that can change/evolve according to an ongoing damage process using a discrete type modeling approach. One embodiment of this type of modeling approach includes a technique disclosed in "The Floating Node Method (FNM)," as described in Chen, B Y, S. T. Pinho, N. V. De Carvalho, P. M. Baiz, T. E. Tay, 2014, "A floating node method for the modeling of discontinuities in composites," Engineering Fracture Mechanics 127:104-134, which is hereby incorporated by reference in its entirety.

The tool includes a criteria to predict delamination growth. This may utilize the Virtual Crack Closure Technique (VCCT). A summary of this approach is described in Krueger, R. 2004, "Virtual crack closure technique: History, approach, and applications, Applied Mechanics Review," (57) 2:109-143, which is hereby incorporated by reference in its entirety.

The tool may also include a criteria to predict delamination migration in the form of matrix cracks internal to a laminate. In one embodiment, no details of this damage feature are simulated other than its location and occurrence. Details regarding investigation of a delamination migration criteria are disclosed in Ratcliffe, J. G., M. W. Czabaj, T. K. Obrien, 2013, "A test for characterizing delamination migration in carbon/epoxy tape laminates," NASA/TM-2013-218028, Canturri, C., E. S. Greenhalgh, S. T. Pinho, J. Ankersen, 2013, "Delamination growth directionality and the subsequent migration process: The key to damage tolerant design, Composites Part A: Applied Science and Manufacturing," (54):79-87 and Greenhalgh, E. S., Rogers, C., Robinson, P. "Fractographic observations on delamination growth and the subsequent migration through the laminate," Composites Science and Technology, 2009, 69:2345-2351, which are hereby incorporated by reference in their entirety.

The tool may also include a feature that numerically represents a geometric material discontinuity in the form of a transverse matrix crack that is adjacent to a delamination. A transverse matrix crack adjacent to a delamination may be represented in the finite element mesh as a discontinuity in mesh stiffness along an element boundary (i.e., in the case where a delamination migrates via a transverse matrix crack the laminate material on either side of the delamination changes in thickness at the migration location).

The enriched element is based on the formulation of a shear deformable shell/plate element. Suitable elements may be developed as user defined subroutines with commercial software ABAQUS, but the element could be developed using other suitable finite element software tools.

The invention may be utilized to simulate damage in composite laminate structures in various applications, including the fields of aerospace, automobile and marine industries. The invention may be useful for a structure design and certification by simulating impact damage, compression after impact damage, or any similar delamination

driven damage process in a laminate. For example, the simulation tool of the present invention may be utilized to evaluate various composite laminates. A structural component for an aircraft, vehicle, space craft, ship, etc. may be designed based, at least in part, on the results provided by the simulation tool. More specifically, a composite laminate having acceptable resistance to damage (delamination matrix cracking, etc.) may be selected for a structural component of an aircraft or other vehicle using the simulation tool of the present invention, and a composite laminate having a ply orientation etc. as evaluated/selected using the simulation tool may be utilized in fabricating the component. The simulation tool of the present invention may reduce the need to fabricate and test various laminates during the design process, and also utilizes significantly less computer resources than prior multi-layer finite element methods utilized for damage simulation/evaluation of composite materials.

BRIEF DESCRIPTION OF THE SEVERAL VIEWS OF THE DRAWINGS

FIG. **1** is a flow chart showing a process of simulating damage in composite laminates according to one aspect of the present invention;

FIG. **2** is a schematic view showing a Mindlin composite shell element;

FIG. **3** is a schematic view of an undamaged shell element;

FIG. **4** is a schematic view of a split shell element corresponding to delaminations in a composite material;

FIG. **5** is a schematic view showing coordinates and variables utilized in a Virtual Crack Closure Technique (VCCT);

FIG. **6** is a schematic view showing implementation of a Virtual Crack Closure Technique (VCCT) showing opposing nodes tied together according to element state in relation to a crack tip or delamination front;

FIG. **7** is a schematic view showing an evaluation of delamination propagation in a finite element model;

FIG. **8** is a schematic view including a physical schematic of delamination migration that has occurred and a corresponding representation in a shell element model where a stiffness discontinuity at an element boundary corresponds to a matrix crack in the physical schematic;

FIG. **9** is a schematic view showing delamination that has migrated in a composite laminate;

FIG. **10** is a schematic view showing cusp orientation and adjacent fiber orientation; and

FIG. **11** is a physical schematic view showing one potential delamination-migration energy criteria for use in a shell element model.

DETAILED DESCRIPTION OF THE INVENTION

For purposes of description herein, the terms "upper," "lower," "right," "left," "rear," "front," "vertical," "horizontal," "positive," "negative," and derivatives thereof shall relate to the invention as oriented in FIG. **2**. A summary of the process is shown in FIG. **1**. However, it is to be understood that the invention may assume various alternative orientations and step sequences, except where expressly specified to the contrary. It is also to be understood that the specific devices and processes illustrated in the attached drawings, and described in the following specification, are simply exemplary embodiments of the inventive concepts defined in the appended claims. Hence, specific dimensions and other physical characteristics relating to the embodiments disclosed herein are not to be considered as limiting, unless the claims expressly state otherwise.

FIG. **1** depicts a process **1** according to one aspect the present invention. Following the start of process **1**, a shell finite element model is created at step **2** and a load is applied. As discussed in more detail below, the shell finite element model is initially a model with a low-fidelity mesh including a plurality of adjacent (side-by-side, not "stacked") shell elements. The shell elements include a stiffness matrix corresponding to a composite laminate having a plurality of layers of fibers and a matrix material. The shell finite element model may initially include a single layer mesh composed of a plurality of single-layer shell elements with "floating" nodes that permit the shell element to be split as required to simulate delamination and delamination-matrix crack interaction. As used herein, the term "shell" generally refers to any finite element (e.g. shell, plate, etc.) capable of numerically modeling damage propagation in composite laminates as described herein. It will be understood that the present invention is not limited to shell elements.

Referring again to FIG. **1**, at a next step **4**, a load increment is solved. The process **1** may then proceed directly to step **14** (discussed below), or the process may proceed to optional steps or features shown in the dashed region **12**. As discussed in more detail below, the optional process features relate to determining if a crack or flaw forms, and includes evaluating damage initiation criterion **6** throughout the model. This is followed by determining if a crack or flaw is formed at step **8**. If a crack or flaw does form the shell elements are split as needed (preferably only as needed) to insert the crack or flaw at step **10**, and the process proceeds to step **16**. If no crack or flaw is formed at step **8**, the optional processes proceeds to step **14**. At **14**, the process involves determining if there is an existing crack or flaw. If not, the process returns to **4**, and the next load increment is solved. However, if it is determined at step **14** that there is an existing crack or flaw, the process proceeds to step **16**. As discussed in more detail below, predefined criteria may be utilized to determine if a delamination grows at the crack or flaw boundary. If not, the process returns to **4**, and the next load increment is solved. If the delamination does grow, the process then involves determining if the delamination migrates via a matrix crack at step **18**. If the delamination crack does migrate, the next elements in the direction of the growth are split at a new interface as indicated at step **20**, and the process then continues with the next load increment/solution **4**. As discussed in more detail below, the stiffness matrices of the laminate at the migrated interface are not equal to the stiffness matrices at the prior interface to thereby account for the migration of the delamination crack via a matrix crack in the mesh at the element boundary.

If a delamination does not migrate at **18**, the process continues as shown at **22**. At **22**, the next elements are split in the direction of growth at the current interface, and the process continues with the next load increment/solution **4**. It will be understood that the process includes checking if the solution is complete after **20** and **22**, and ending the process if the solution is complete. If the solution is not complete after **20** or **22**, the process returns to **4** as shown in FIG. **1**. It will be understood that the present invention is not necessarily limited to the steps and sequences described above in connection with FIG. **1**. In general, there may be additional steps not shown in FIG. **1** following steps **20** and **22** for scenarios including: 1) when multiple delaminations interact with one another and may or may not link together

via matrix cracks; and 2) an element that has migration predicted in one region but not in another in the same load increment.

With further reference to FIG. **2**, a Mindlin composite shell element includes 4 nodes N**1**-N**4**. The stiffness matrix integration can be expressed utilizing the following general shell element stiffness integration equation:

$$K^{(e)} = \int_x\int_y H^T\left[\int_z Cdz\right]H\,dydx = \int_b\int_b H^T\left[\int_{-\frac{h}{2}}^{\frac{h}{2}} Cdz\right]H\,dydx \tag{1.0}$$

where:

H=strain-displacement matrix

C=constitutive material matrix

b=edge dimension of an element

h=total thickness of the laminate

The laminate theory constitutive material matrices are as follows:

$$A = \int_{-\frac{h}{2}}^{\frac{h}{2}} C_p dz, \quad B = \int_{-\frac{h}{2}}^{\frac{h}{2}} zC_p dz \tag{2.0}$$

$$D = \int_{-\frac{h}{2}}^{\frac{h}{2}} z^2 C_p dz, \quad G = \int_{-\frac{h}{2}}^{\frac{h}{2}} C_s dz$$

wherein C_p and C_s=planar and shear constitutive material matrices.

The laminate shell element stiffness integration is as follows:

$$K^{(e)} = \int_b\int_b H^T\left[\int_{-\frac{h}{2}}^{\frac{h}{2}} C(A, B, D, G)dz\right]H\,dydx \tag{3.0}$$

When a discontinuity is introduced at a single uniform z-coordinate, as in the case of a delamination, the element material is split into two regions, Ω_A and Ω_B, where region Ω_B corresponds to the DOF of the floating nodes. The stiffness matrix for a split element is given by:

$$K^{(e)}=K_{\Omega_A}{}^{(e)}+K_{\Omega_B}{}^{(e)} \tag{4.0}$$

With further reference to FIG. **3**, an undamaged shell element **24** initially includes nodes N**1**-N**4** that comprise real nodes (RN) and unused floating nodes (FN). Floating nodes and real nodes are generally known in the art (see, Chen, "The Floating Node Method (FNM)" supra) Thus, a detailed description of these terms is not believed to be required.

The stiffness matrix for the undamaged shell element **24** is given by:

$$K^{(e)} = \begin{bmatrix} \left[K_{\Omega_A}^{(e)}\right]_{24\times24} & [0] \\ [0] & [0]_{24\times24} \end{bmatrix}_{48\times48} \tag{5.0}$$

The configuration of equation 5.0 allows for one delamination. However, it will be understood that the same approach may be utilized to allow for additional delaminations if required.

With further reference to FIG. **4**, the shell element **24** can be split into first and second overlapping shell elements or components **24**A and **24**B. Shell element **24**A includes real nodes RN**1**-RN**4**, and the shell element **24**B includes floating nodes FN**1**-FN**4**. The stiffness matrix for the split elements **24**A and **24**B of FIG. **4** is as follows:

$$K^{(e)} = \begin{bmatrix} \left[K_{\Omega_A}^{(e)}\right]_{24\times24} & [0] \\ [0] & \left[K_{\Omega_A}^{(e)}\right]_{24\times24} \end{bmatrix}_{48\times48} \tag{6.0}$$

In general, the undamaged shell element **24** (FIG. **3**) may have a stiffness matrix corresponding to a composite laminate including a plurality of layers of reinforcing fibers disposed at different orientations. The shell element **24** may be split to form the shell elements or components **24**A and **24**B (FIG. **4**) to simulate a delamination between the shell elements **24**A and **24**B. The stiffnesses of the shell elements **24**A and **24**B correspond to the portions of a composite laminate disposed on either side of a delamination crack. Shell elements or components **24**A and **24**B may be considered to be separate elements or they may be considered to be separate parts or components of a single element.

With further reference to FIG. **5**, a finite element model **50** may utilize the Virtual Crack Closure Technique (VCCT). Energy release rate equations originally given by Wang, J T, and Raju, I S. "Strain energy release rate formulas for skin-stiffener debond modeled with plate elements." *Engineering Fracture Mechanics* 54.2 (1996): 211-228, may be utilized. These equations are shown here corresponding to a delamination growth direction along the positive x direction as described in FIG. **5**. Using delamination growth in the positive x-direction as an example, Mode I, Mode II, and total energy release rates at node (i,j) are determined as follows:

$$G_1^{(+x)} = \frac{-1}{2\Delta A^{(e)}}\left[F_z^{(i,j)}\left(w^{(i-1,j)\prime} - w^{(i-1,j)}\right) + M_x^{(i,j)}\left(\theta_x^{(i-1,j)\prime} - \theta_x^{(i-1,j)}\right) + M_y^{(i,j)}\left(\theta_y^{(i-1,j)\prime} - \theta_y^{(i-1,j)}\right)\right] \tag{7.0}$$

$$G_{II}^{(+x)} = \frac{-1}{2\Delta A^{(e)}}\left[F_x^{(i,j)}\left(u^{(i-1,j)\prime} - u^{(i-1,j)}\right)\right] \tag{8.0}$$

$$G_T^{(+x)} = G_I^{(+x)} + G_{II}^{(+x)} \tag{9.0}$$

where F, M, w, u, and θ are nodal force, moment, z-displacement, x-displacement, and rotation, respectively. Nodal designations with a prime superscript refer to the "upper" set of elements (i.e., floating nodes) and crack extension area, $\Delta A^{(e)}=b^2$, is the area of an element for a square regular mesh. It will be understood that other mesh shapes may be utilized.

As described in Benzeggagh, M. L., M. Kenane. 1996. "Measurement of Mixed-Mode Delamination Fracture Toughness of Unidirectional Glass/Epoxy Composites with Mixed-Mode Bending Apparatus," *Composites Science and Technology,* 56(4):439-449, the mixed-mode critical energy release rate, G_c may be calculated using the Benzeggagh-Kenane criterion as follows:

$$G_c^{(+x)}=G_{Ic}+(G_{IIc}-G_{Ic})(G_{II}^{(+x)}/G_T^{(+x)})^{\eta BK} \tag{10.0}$$

A summary of the VCCT is disclosed in Kreuger, "Virtual crack closure technique: History, approach, and applications, Applied Mechanics Review," supra. Thus, a detailed description of the VCCT is not believed to be required.

With further reference to FIG. **6**, the enriched shell element **24** can be used in a mesh to represent four different damage states. These are illustrated in FIG. **6** and consist of 1) undamaged element, 2) split element ahead of the crack

tip with all nodes tied, 3) split element at the crack tip with one or more nodes free, and 4) split element in the crack wake with all nodes free. At the end of every solution increment, VCCT is used on each delamination front tied node to determine if the tie should remain in place or be released resulting in a change in the adjacent element damage states (see Orifici, A. C., R. S. Thomson, R. Degenhardt, S. Busing, J. Bayandor. 2007. "Development of a Finite Element Methodology for Modelling Mixed-mode Delamination Growth in Composite Structures," 12th *Australian International Aerospace Congress, Australia*). Thus, the Virtual Crack Closure Technique (VCCT) may be used at a delamination crack tip or delamination front **30** utilizing tied nodes TN. The tied nodes TN comprise real nodes RN that are tied to floating nodes FN. One method to tie nodes together is by inserting high stiffness terms into the stiffness matrix coupling translational degrees of freedom. The undamaged elements **24** as labeled in FIG. **6**, preceding the delamination crack tip or front **30** include nodes N that utilize real nodes RN only. Split elements **32** immediately preceding crack tip or front **30** include nodes TN at each corner of the split elements **32**. As discussed above, each TN comprises a real node RN that is tied to a floating node FN. Alternatively, more than one row of split elements with all nodes tied may be defined ahead of a delamination to improve model accuracy and mesh independence.

The split elements include lower and upper element components **34**A and **34**B, respectively. The lower components **34**A and upper components **34**B adjacent to the "open" side of delamination crack tip or front **30** include tied nodes TN at the crack tip **30**. The components **34**A include real nodes RN along boundaries **36**A away from the crack tip **30**, and the components **34**B include floating nodes FN along boundaries **36**B away from the crack tip **30**. The split components **38**A and **38**B away from the crack tip **30** include floating nodes FN and real nodes RN that are all free/not tied. In general, an offset is applied to the elements **24**A, **24**B, etc. that have been split coupling certain rotational and membrane degrees of freedom to account for the offset of the material on each side of a delamination from the original undamaged element's neutral axis. When using the FNM, opposing components such as **34**A and **34**B, are actually the same element with two separate regions or components.

An example of a VCCT is disclosed in Krueger, "Virtual crack closure technique: History, approach, and applications, Applied Mechanics Review," supra. Thus, a detailed description of VCCT is not believed to be required.

With further reference to FIG. **7**, a finite element model **50** similar to the model **50** of FIG. **6** but with a staggered delamination front is shown in plan view. Delamination propagation is evaluated, as show in FIG. **7**, along directions X and Y aligned with the mesh. The total energy release rate (G_T) is calculated along the mesh lines or boundaries **40** in four directions at each tied node TN on a delamination front. If the total energy release rate (G_T) in any of the four propagation directions is greater than the critical energy release rate (G_C), the tie is released.

Although the propagation of a delamination crack may be determined utilizing the VCCT approach as described previously and as shown in FIGS. **6** and **7**, it will be understood that other VCCT approaches such as described in Xie, D., S. B. Biggers Jr. "Strain energy release rate calculation for a moving delamination front of arbitrary shape based on the virtual crack closure technique. Part I: Formulation and validation," Engineering Fracture Mechanics, 2006, 73:771-785 or a Cohesive Zone (CZ) approach as described in Wisnom, M R, "Modelling discrete failure in composites with interface elements," Composites: Part A, 2010, 41:795-805 may also be utilized.

With further reference to FIG. **8**, a laminate **45** may comprise a plurality of layers of fibers **52-56**. The fibers may be oriented at 0° and 90° as shown in FIG. **8**, or in other orientations as required for a particular application. A delamination crack **60** may include a first portion **60**A with layers **52-54** disposed above the first crack portion **60**A, and layers **55-56** disposed below the first crack portion **60**A, forming a first laminate portion **62** having a thickness t_1, and a second laminate portion **64** having a thickness t_2. The delamination **60** may migrate via a matrix crack **66** from the first portion or interface **60**A to a second delamination crack portion or interface **60**B. Upper laminate portion **68** (layers **52** and **53**) has a thickness t_3 above the new crack portion or interface **60**B, and a lower portion **70** (layers **54-56**) below the new crack or interface **60**B has a thickness t_4.

As shown by the arrow A, nodes FN**2** and RN**2** of finite element model **50** correspond to the matrix crack **66** location. The matrix crack **66** is represented by a discontinuity corresponding to the integration of the stiffness matrix (equation 3.0, supra) across different thicknesses domains as follows:

$$K_{\Omega_A}^{(e)}=\iint_{A^{(e)}} H_{\Omega_A}^{T}\left[\int_{-h/Z}^{z'} C(A,B,D,G)_{\Omega_A} dz\right] H_{\Omega_A} dA \tag{11.0}$$

$$K_{\Omega_B}^{(e)}=\iint_{A^{(e)}} H_{\Omega_B}^{T}\left[\int_{z'}^{-h/Z} C(A,B,D,G)_{\Omega_B} dz\right] H_{\Omega_B} dA \tag{12.0}$$

where z' is the location of a delamination along the z-axis in a laminate.

Thus, the element **24**B**1** (thickness t_1) will have a stiffness corresponding to the layers **52-54**. The element **24**A**1** (thickness t_2) has a stiffness matrix corresponding to the layers **55** and **56**. However, the element **24**B**2** (formed after crack **60** migrates to the new interface **60**B) has a thickness t_3 corresponding to layers **52** and **53**. Element **24**A**2** has a thickness t_4 corresponding to layers **54-56**.

With further reference to FIG. **9**, in the illustrated example delamination **60** propagates via a matrix crack from a first interface **76** (crack **60**A) between layers **54** and **55** to a second interface **78** (crack **60**B) between layers **53** and **54**. However, the matrix crack **66** may also propagate in the opposite direction from interface **76** to a third interface **80** between layers **55** and **56**. The direction of the propagation of matrix crack **66** may be determined utilizing the direction (sign, positive or negative) of the tie shear forces F_x at the crack tip or delamination front **30**. The shear force sign indicates the orientation of microcracks, or cusps, that precede the delamination **60**. The tendency of propagation in the Z coordinate (FIG. **9**) transverse to the present interface, i.e., up or down, may be determined by determining if the fiber orientation in the adjacent ply in the direction the cusps are pointing towards (i.e., the bounding fiber orientation) is such that the cusps are arrested or allowed to pass through as described in more detail in De Carvalho, N V, Chen, B Y, Pinho, S T, Ratcliffe, J G, Baiz, P M, Tay, T E. 2015, "Modeling delamination migration in cross-ply tape laminates," *Composite: Part A* 71:192-203.

With further reference to FIG. **10**, another aspect of the present invention involves determining the cusp orientation about the Z axis as discussed in Canturri, C., E. S., Greenhalgh, S. T. Pinho, J. Ankersen, 2013, "Delamination growth directionality and the subsequent migration process: The key to damage tolerant design, Composites Part A: Applied Science and Manufacturing," (54):79-87 relative to the bounding ply fibers. The crack **60** may have a three dimensional crack tip or delamination front **30** with a physical

representation shown in dashed lines in FIG. **10** superimposed over the staggered approximation made in the mesh. At a given node **84** located on delamination front **30**, the angle of the force vector F_n is calculated from the individual tie shear forces F_x and F_y acting on node **84**. The cusp orientation about the Z-axis may be assumed to be orthogonal to F_n. The relative angle, α, between F_n and the bounding fiber orientation may be used as the basis for a criterion determining if cusps are allowed to pass through and result in a delamination migration. If the conditions for described above are met, migration still may not occur if the cusps are greatly misaligned with the direction of delamination growth and/or the tie shear forces are small (i.e., possible in a Mode I dominated delamination).

With further reference to FIG. **11**, energy criteria can be utilized to determine migration and/or delamination at a delamination front **30**. At delamination front **30**, the total energy release rate (G_T) is calculated. The critical energy release rate (G_C) is calculated for the first interface **76**. The total energy release rate and critical energy release rate (designated G'_T and G'_C in FIG. **11** at interface **78**) are assumed to be very similar (or identical) to those of the current interface. A critical energy release rate is given by the equation 10.0 (supra).

G_{IC} is the Mode I critical energy release rate, wherein Mode I is a crack that is "opening." G_{IIC} is the Mode II critical energy release rate, wherein Mode II is a shear or "sliding" type crack. G_{II} is the Mode TI energy release rate. The following assumptions are utilized:

$$G_{I_C}^{(fiber)}=\infty$$

$$\Delta U_{mig}<<\Delta U_{delam}$$

Were ΔU_{mig} is the energy dissipated due a matrix crack (i.e. migration), and ΔU_{delam} is the energy dissipation due to growth of the delamination crack **60**.

The energy release rates and critical energy release rates can be utilized to predict one of three possibilities at a delamination front node **86**. In the following, G_{Ic} refers to matrix crack (i.e., cusp) critical energy release rate and G_c refers to delamination critical energy release rate. G_T is compared to both toughness quantities in a manner similar to De Carvalho, N V, Chen, B Y, Pinho, S T, Ratcliffe, J G, Baiz, P M, Tay, T E. 2015, "Modeling delamination migration in cross-ply tape laminates," *Composite: Part A* 71:192-203. Specifically, migration and delamination occur if:

$$G_T>G_{Ic}$$

&

$$G_T>G_c$$

Delamination occurs if:

$$G_T<G_{Ic}$$

&

$$G_T>G_c$$

No growth occurs if:

$$G_T<G_c$$

Referring again to FIG. **1**, the steps designated **16** and **18** may utilize the delamination/migration criteria discussed above in connection with FIG. **11**. The cusp orientation is determined using the tie shear forces as discussed above in connection with FIGS. **10** and **11**. As discussed above in connection with FIG. **8**, the matrix crack is modeled utilizing a discontinuity in the mesh stiffness at opposing element boundaries. Alternatively, matrix cracks may be inserted into the mesh by using floating nodes to break nodal connectivity between adjacent elements that represent a single ply.

Referring again to FIG. **1**, the splitting of elements either at a new migrated interface (designated **20** in FIG. **1**) and/or splitting the next element in the direction of growth at the current interface (designated **22** in FIG. **1**) utilize adaptive fidelity (i.e. splitting elements on demand as needed, but not otherwise). It will be understood that this approach permits modeling of crack growth without the need to provide a large number of parallel/overlapping elements corresponding to the individual layers of the composite material at the time the initial finite element model is created.

Initially separate delaminations in a finite element model may grow independently but at some point in a solution procedure the initially separate delaminations may reach a common nodal location in the mesh. Or, similarly, separate deliminations may be adjacent to one another during growth. The migration criteria as described previously or a similar variation may be applied in these instances to determine if the delaminations link together via a matrix crack and whether a TN is released or the tie is maintained. Furthermore, if separate delaminations exist at different interfaces, the delaminations may grow to a common location in the mesh or they may be adjacent to one another during growth. The migration criteria as described above can be used to determine how elements are split and which ties are released, if any, in the region where the two delaminations interact.

The simulation tool may optionally include a fiber failure simulation capability. One method of doing this is use of continuum damage mechanics as described in Matzenmiller, A. J. Lubliner, R. L. Taylor, 1995, "A constitutive model for anisotropic damage in fiber-composites," *Mechanics of Materials*, (20)2:125-152.

All references contained herein are hereby incorporated by reference in their entirety.

What is claimed is:

1. A computerized method of simulating damage growth in composite laminates having a plurality of interfaces between adjacent layers of fibers disposed in a matrix material and at least one delamination crack having a delamination front at a current interface, the method comprising:

forming a finite element model of a composite material by providing a plurality of nodes and an associated single layer of elements comprising shell or plate finite elements, wherein the elements comprise stiffness matrices corresponding to a plurality of layers of fibers disposed in a matrix material;

storing the finite element model in computer memory;

using a computer to determine a finite element solution to the finite element model subjected to a load;

providing separate current stiffness matrices corresponding to laminate layers on each side of a delamination crack at the current interface;

utilizing predefined criteria to determine if the delamination crack grows as a result of a most recent incremental finite element load step solution as part of a finite element model solution for an applied load;

if the delamination crack does grow, predicting the spatial orientation of microcracks that precede the delamination front and evaluating if an adjacent layer of fibers arrests the microcracks to thereby determine if the delamination front remains at the current interface or migrates in a direction that is transverse to the elements

through at least one of the adjacent layers of fibers via a matrix crack to a new interface;

if the delamination crack grows and remains at the current interface, split one or more adjacent elements in the direction of growth into new separate stiffness matrices that are the same as the current stiffness matrices whereby the new separate stiffness matrices correspond to laminate layers on each side of the delamination crack at its current interface;

if the delamination grows and migrates to a new interface that is offset from the current interface, split one or more adjacent elements in the direction of growth into new separate stiffness matrices that are modified relative to the current stiffness matrices and correspond to the new interface location that is offset from the current interface to thereby account for migration of the delamination to the new interface.

2. The method of claim **1**, wherein:

forming a finite element model includes forming a plurality of floating nodes for each single layer shell or plate element.

3. The method of claim **2**, wherein:

the separate stiffness matrices are formed utilizing the floating nodes.

4. The method of claim **1**, including;

forming tied nodes at the delamination front;

predicting the spatial orientation of microcracks that precede the delamination front utilizing tie forces at the tied nodes.

5. The method of claim **4**, including:

utilizing tie forces of the tied nodes to predict if an adjacent layer of fibers arrests the microcracks; and

splitting one or more adjacent elements in the direction of growth at the new interface if an adjacent layer of fibers does not arrest the microcracks.

6. The method of claim **1**, wherein:

if the delamination crack grows according to a first delamination growth prediction at the current interface or a new interface, the interface location of the adjacent element that is determined to be split is superseded by a second delamination growth prediction that has also determined the adjacent element to be split but at a different interface if the second delamination growth prediction is energetically dominant.

7. The method of claim **1**, including:

using a computer to determine at each load step if a new delamination crack forms according to a predefined damage initiation criteria.

8. The method of claim **1**, wherein:

the finite element model includes a plurality of delamination cracks; and including:

forming separate stiffness matrices corresponding to the laminate layers on each side of each delamination crack.

9. The method of claim **8**, including:

utilizing predefined criteria to determine if the delamination cracks grow at a current interface corresponding to each delamination crack as a result of a most recent finite element solution to an applied load.

10. The method of claim **1**, wherein:

the differences in the stiffness matrices define a stiffness discontinuity at a boundary between adjacent shell elements and thereby model a matrix crack.

11. A computerized method of simulating damage growth in composite laminates having a plurality of interfaces between adjacent layers of fibers disposed in a matrix material, the method comprising:

forming a finite element model of a composite material, the finite element model comprising a plurality of nodes and having a region having a single layer of shell or plate elements comprising a composite stiffness matrix corresponding to a plurality of layers of fibers disposed in a matrix material;

storing the finite element model in computer memory;

using a computer to determine a finite element solution to the finite element model subjected to a load;

if the finite element model has a delamination crack, providing separate stiffness matrices corresponding to laminate layers on each side of the delamination crack;

predicting the spatial orientation of microcracks that precede the delamination front to thereby determine if the delamination front migrates via a matrix crack to a new interface;

if the delamination migrates to a new interface, split one or more adjacent shell elements in the direction of growth to form new shell elements, the new shell elements having stiffness matrices that are modified from those of the current interface split location to correspond to a new interface location that is offset from the current interface to thereby account for migration of the delamination to the new interface by providing a stiffness discontinuity at a boundary between adjacent shell elements thereby modeling the matrix crack.

12. The method of claim **11**, including;

forming tied nodes at the delamination front;

predicting the spatial orientation of microcracks that precede the delamination front utilizing tie forces of the tied nodes.

13. The method of claim **12**, including:

utilizing tie forces of the tied nodes to predict if an adjacent layer of fibers arrests the microcracks.

14. The method of claim **11**, including:

utilizing predefined criteria to determine if the delamination crack grows at the current interface between adjacent layers of fibers as a result of a most recent incremental finite element load step solution as part of a finite element model solution for an applied load.

15. The method of claim **14**, wherein:

if the delamination crack grows, with or without migration, the interface location of an adjacent element that is determined to be split may be superseded by another nearby element.

16. A computerized method of simulating damage growth in composite laminates having a plurality of interfaces between adjacent layers of fibers disposed in a matrix material, the method comprising:

forming a finite element model of a composite material, the finite element model comprising a plurality of nodes and having a region having a single layer of shell or plate elements comprising a composite stiffness matrix corresponding to a plurality of layers of fibers disposed in a matrix material;

storing the finite element model in computer memory;

using a computer to determine a finite element solution to the finite element model subjected to a load;

using a computer to evaluate at each load step in a numerical finite element solution procedure if a delamination crack exists in the finite element mesh and/or if a delamination crack forms according to a predefined damage initiation criteria;

if a delamination crack forms or is already present, determining the location in the laminate including a present interface;

if a delamination crack does not form, or if a delamination crack does not exist, repeat the step of determining a finite element solution;

if a delamination crack forms or already exists, providing separate stiffness matrices corresponding to laminate layers on each side of the delamination crack;

predicting the spatial orientation of microcracks that precede the delamination front and evaluating if an adjacent layer of fibers arrests the microcracks to thereby determine if the delamination front remains in the current interface or migrates in a direction that is traverse to the elements through at least one of the adjacent layers of fibers via a matrix crack to a new interface;

if the delamination grows and migrates to a new interface, split one or more adjacent shell elements to form new shell elements having stiffness matrices to thereby account for migration of the delamination to the new interface.

17. The method of claim **16**, including:

providing a stiffness discontinuity at a boundary between adjacent shell elements thereby modeling the matrix crack.

18. The method of claim **16**, including:

utilizing predefined criteria to determine if the delamination crack grows at the current interface between adjacent layers of fibers as a result of a most recent incremental finite element load step solution as part of a finite element model solution for an applied load.

19. The method of claim **18**, including:

if the delamination crack grows and remains at the current interface, split one or more adjacent elements in the direction of growth into separate stiffness matrices corresponding to laminate layers on each side of the delamination crack at its current interface.

20. The method of claim **16**, including,

forming tied nodes at the delamination front;

predicting the spatial orientation of microcracks that precede the delamination front utilizing tie forces of the tied nodes at a delamination front.

* * * * *