https://ntrs.nasa.gov/search.jsp?R=20080007049 2019-08-30T03:23:56+00:00Z

US006619030B1

(12) **United States Patent**
Seda et al.

(10) **Patent No.: US 6,619,030 B1**
(45) **Date of Patent: Sep. 16, 2003**

(54) **AIRCRAFT ENGINE WITH INTER-TURBINE ENGINE FRAME SUPPORTED COUNTER ROTATING LOW PRESSURE TURBINE ROTORS**

(75) Inventors: **Jorge F. Seda**, Cincinnati, OH (US); **Lawrence W. Dunbar**, Cincinnati, OH (US); **Philip R. Gliebe**, Waynesville, OH (US); **Peter N. Szucs**, West Chester, OH (US); **John C. Brauer**, Lawrenceburg, IN (US); **James E. Johnson**, Hamilton, OH (US); **Thomas Moniz**, Loveland, OH (US); **Gregory T. Steinmetz**, Cincinnati, OH (US)

(73) Assignee: **General Electric Company**, Schenectady, NY (US)

(*) Notice: Subject to any disclaimer, the term of this patent is extended or adjusted under 35 U.S.C. 154(b) by 68 days.

(21) Appl. No.: **10/087,681**

(22) Filed: **Mar. 1, 2002**

(51) **Int. Cl.**[7] **F02K 3/02**
(52) **U.S. Cl.** **60/226.1**; 60/39.162; 60/792
(58) **Field of Search** 60/39.162, 226.1, 60/268, 792, 796, 797

(56) **References Cited**

U.S. PATENT DOCUMENTS

4,558,564 A		12/1985	Bouiller et al.	
4,758,129 A		7/1988	Strock	
4,790,133 A		12/1988	Stuart	
4,809,498 A		3/1989	Giffin, III et al.	
4,860,537 A		8/1989	Taylor	
4,951,461 A		8/1990	Butler	
4,965,994 A		10/1990	Ciokajlo	
4,976,102 A		12/1990	Taylor	
5,160,251 A		11/1992	Ciokajlo	
5,177,957 A		1/1993	Grieb	
5,292,227 A	*	3/1994	Czachor et al.	415/209
5,307,622 A	*	5/1994	Ciokajlo et al.	60/39.162
5,361,580 A		11/1994	Ciokajlo	
5,409,184 A		4/1995	Udall et al.	
5,438,756 A	*	8/1995	Halchak et al.	29/889.2
5,443,590 A		8/1995	Ciokajlo	
5,452,575 A		9/1995	Freid	
5,746,574 A	*	5/1998	Czachor et al.	415/115
5,813,214 A		9/1998	Moniz et al.	
6,439,841 B1	*	8/2002	Bosed	415/142

* cited by examiner

Primary Examiner—Cheryl J. Tyler
Assistant Examiner—John F. Belena
(74) *Attorney, Agent, or Firm*—Nathan D. Herkamp; Steven J. Rosen

(57) **ABSTRACT**

An aircraft gas turbine engine assembly includes an inter-turbine frame axially located between high and low pressure turbines. Low pressure turbine has counter rotating low pressure inner and outer rotors with low pressure inner and outer shafts which are at least in part rotatably disposed co-axially within a high pressure rotor. Inter-turbine frame includes radially spaced apart radially outer first and inner second structural rings disposed co-axially about a center-line and connected by a plurality of circumferentially spaced apart struts. Forward and aft sump members having forward and aft central bores are fixedly joined to axially spaced apart forward and aft portions of the inter-turbine frame. Low pressure inner and outer rotors are rotatably supported by a second turbine frame bearing mounted in aft central bore of aft sump member. A mount for connecting the engine to an aircraft is located on first structural ring.

21 Claims, 8 Drawing Sheets

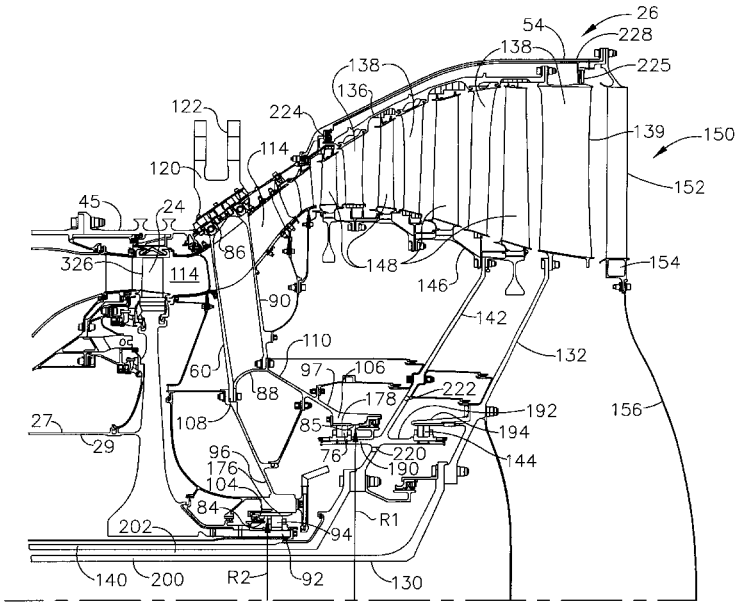

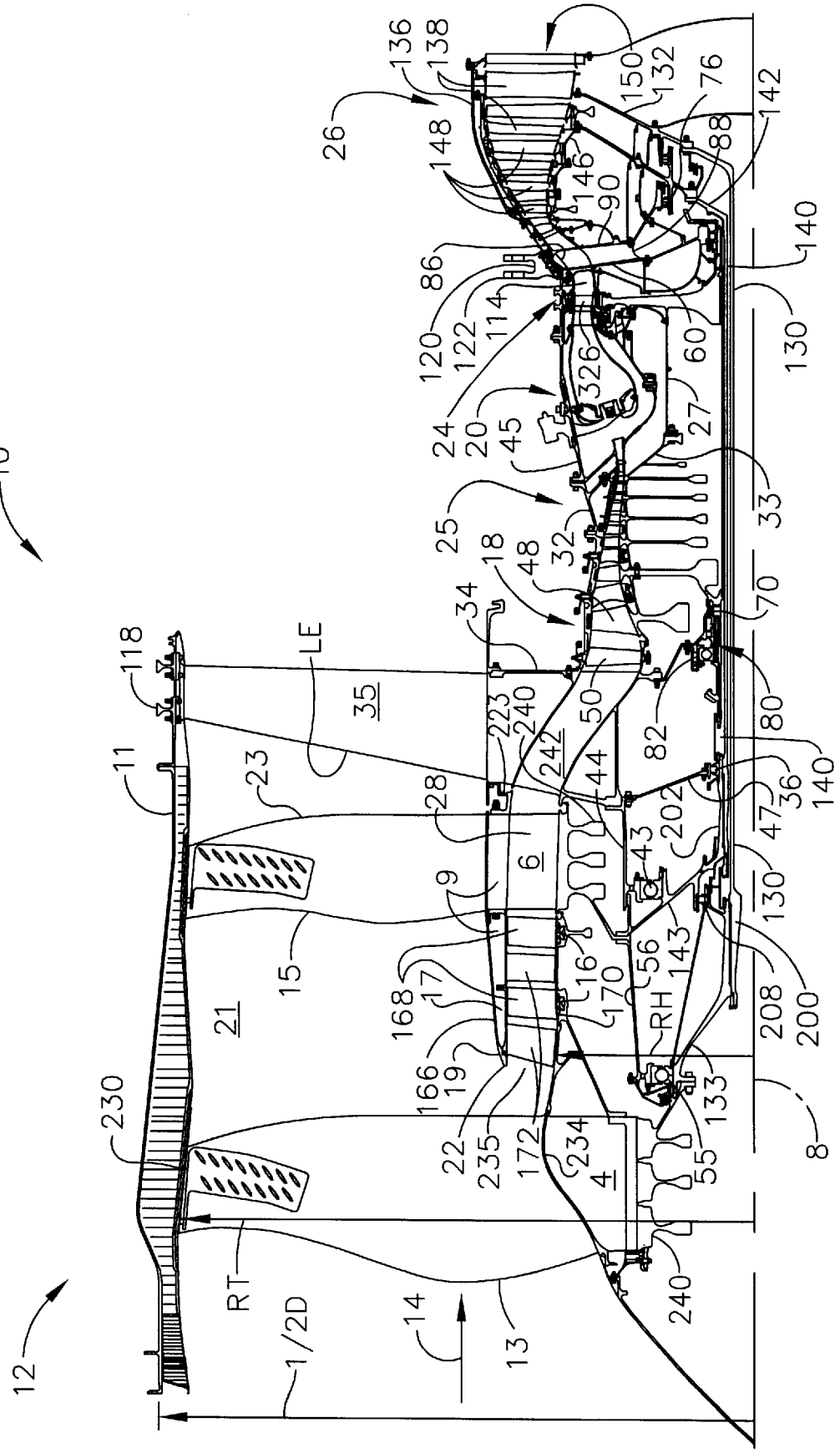
10
12
11
118
230
21
23
15
LE
35
RT
1/2D
14
13
9
6
28
168
17
166
19
22
235
172
234
4
16
170
56
RH
143
133
55
240
223
242
44
50
82
43
202
18
48
34
32
25
24
20
45
326
27
33
70
80
36
47
140
130
208
200
8
26
136
138
148
146
90
86
120
122
114
150
132
76
88
142
60

FIG. 1

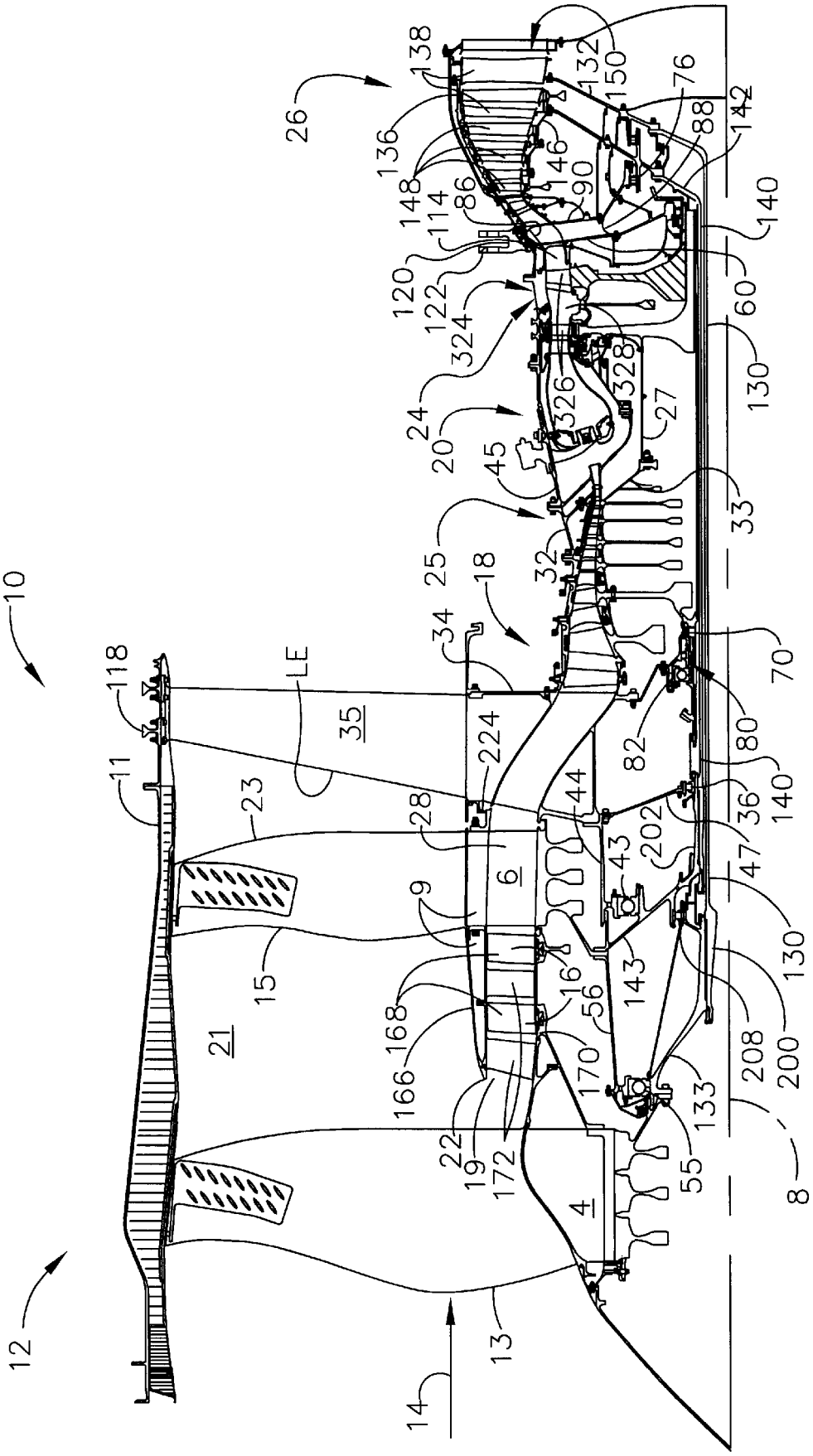
10
12
14
13
8
4
6
21
35
LE
11
118
23
15
9
168
166
22
19
172
170
16
56
143
133
55
28
224
44
43
202
82
34
18
25
32
45
20
24
324
326
328
27
33
130
60
140
120
122
114
86
148
136
138
26
146
90
88
76
142
150
132
70
80
36
47
208
200

FIG. 2

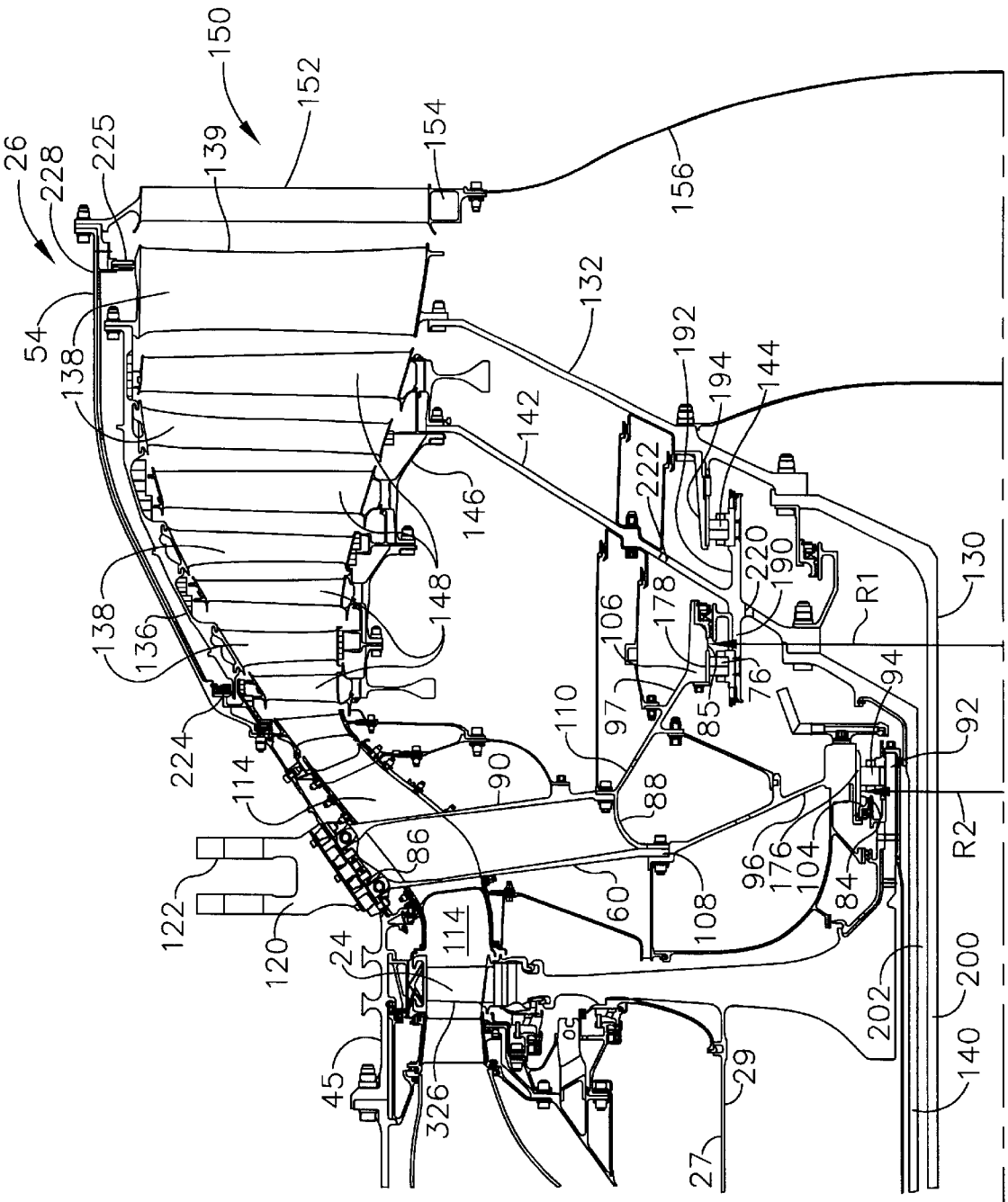
26
228
225
54
138
138
136
224
114
122
120
24
45
326
114
86
90
110
97
106
178
85
76
88
60
108
96
176
104
84
94
92
R2
R1
130
140
200
202
29
27
222
220
190
192
194
144
132
142
146
148
139
150
152
154
156

FIG. 3

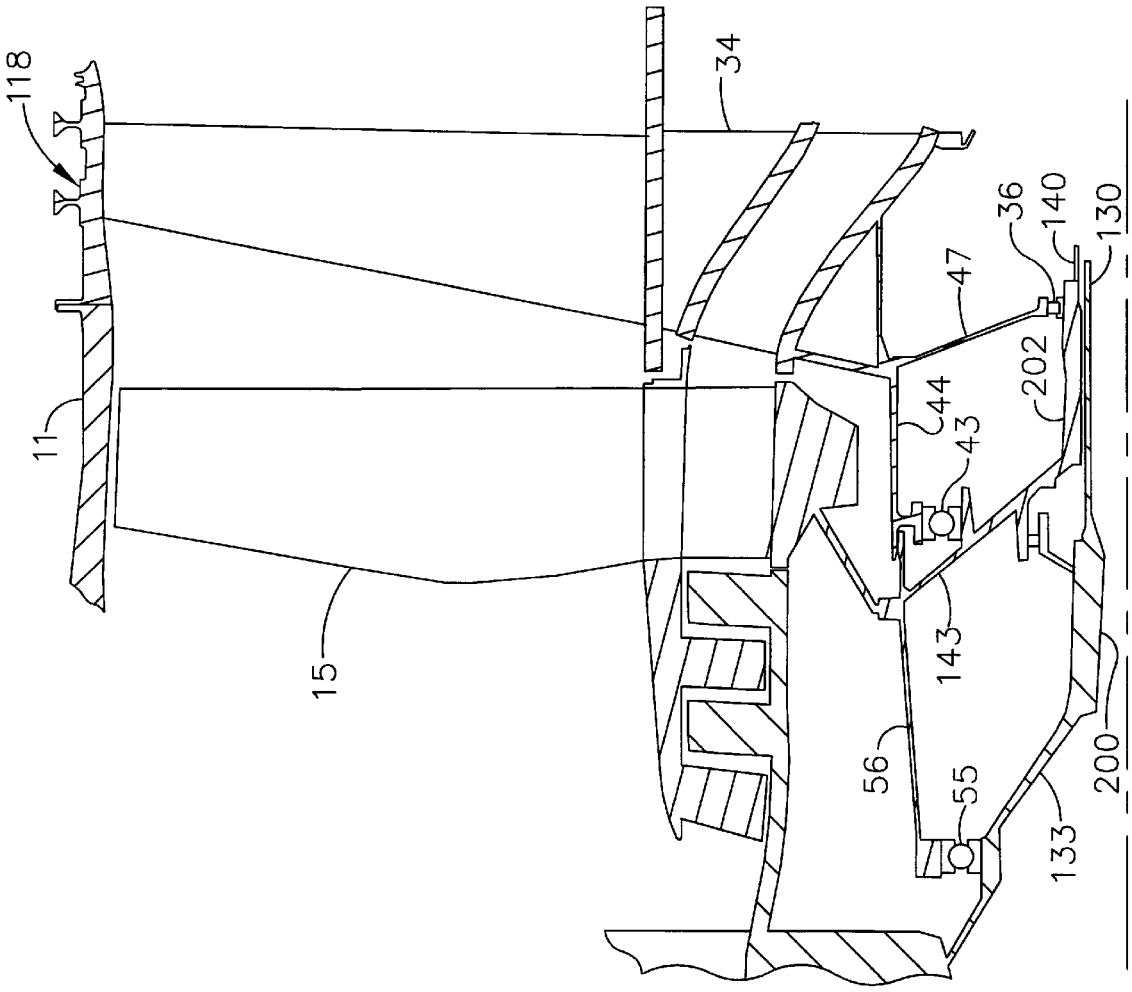

FIG. 4

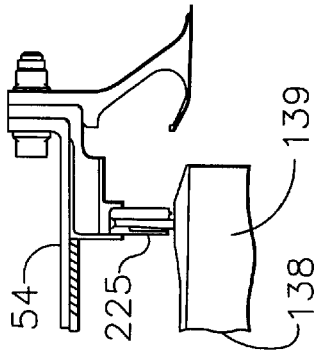

FIG. 7

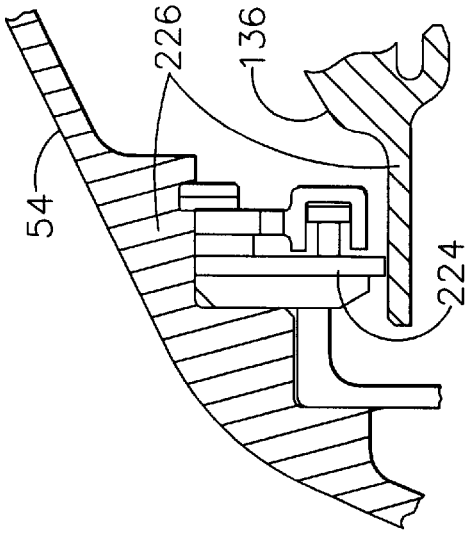

FIG. 6

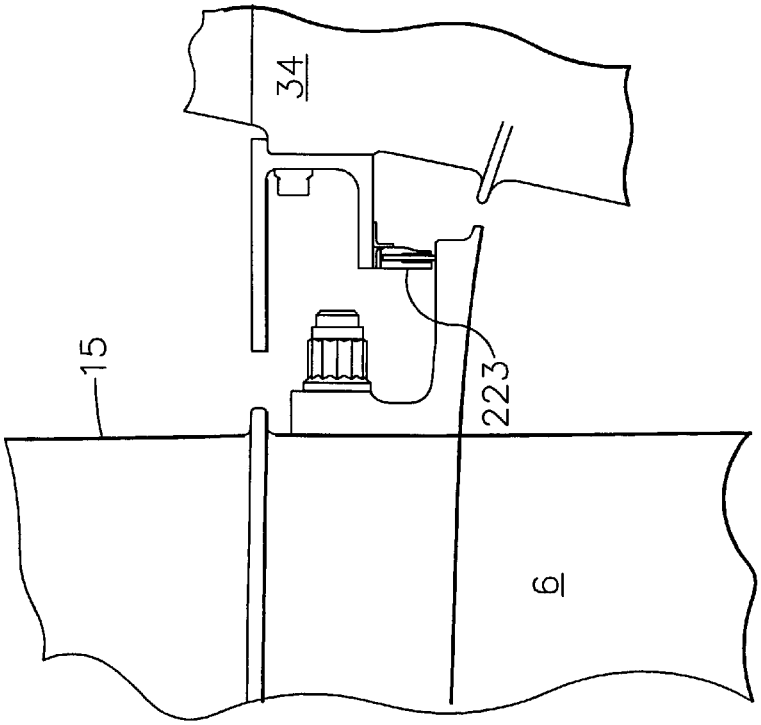

FIG. 5

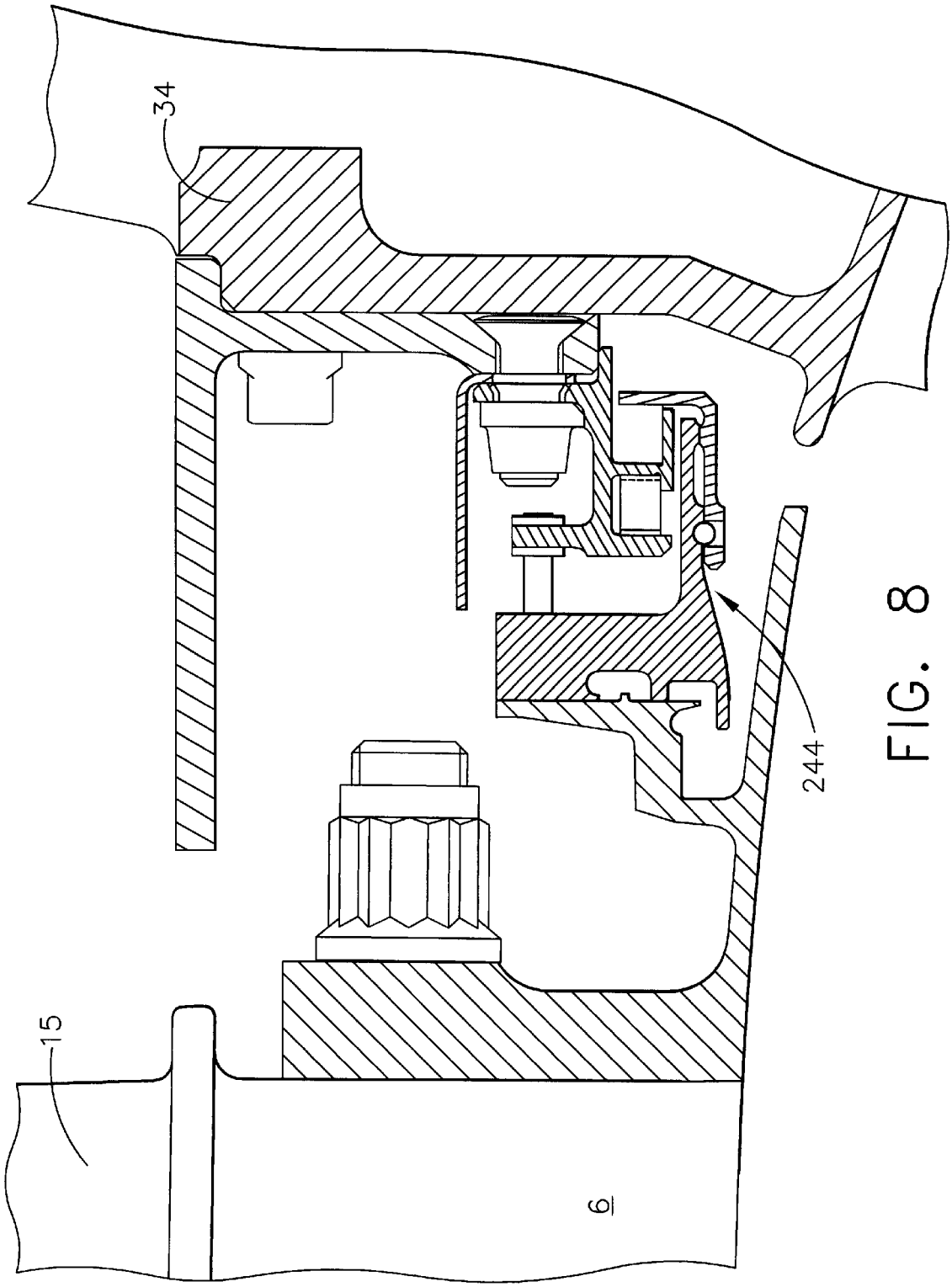

FIG. 8

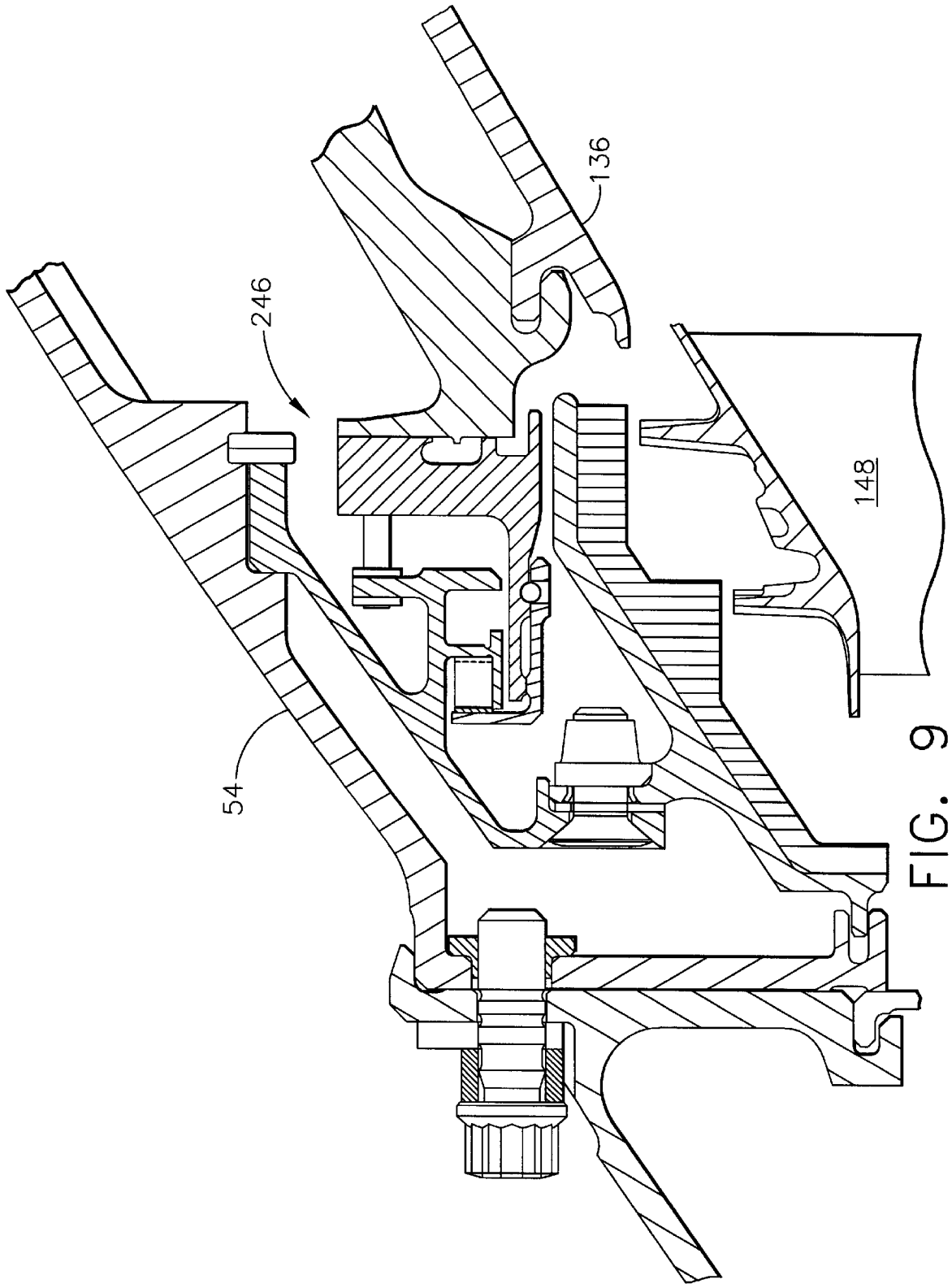

FIG. 9

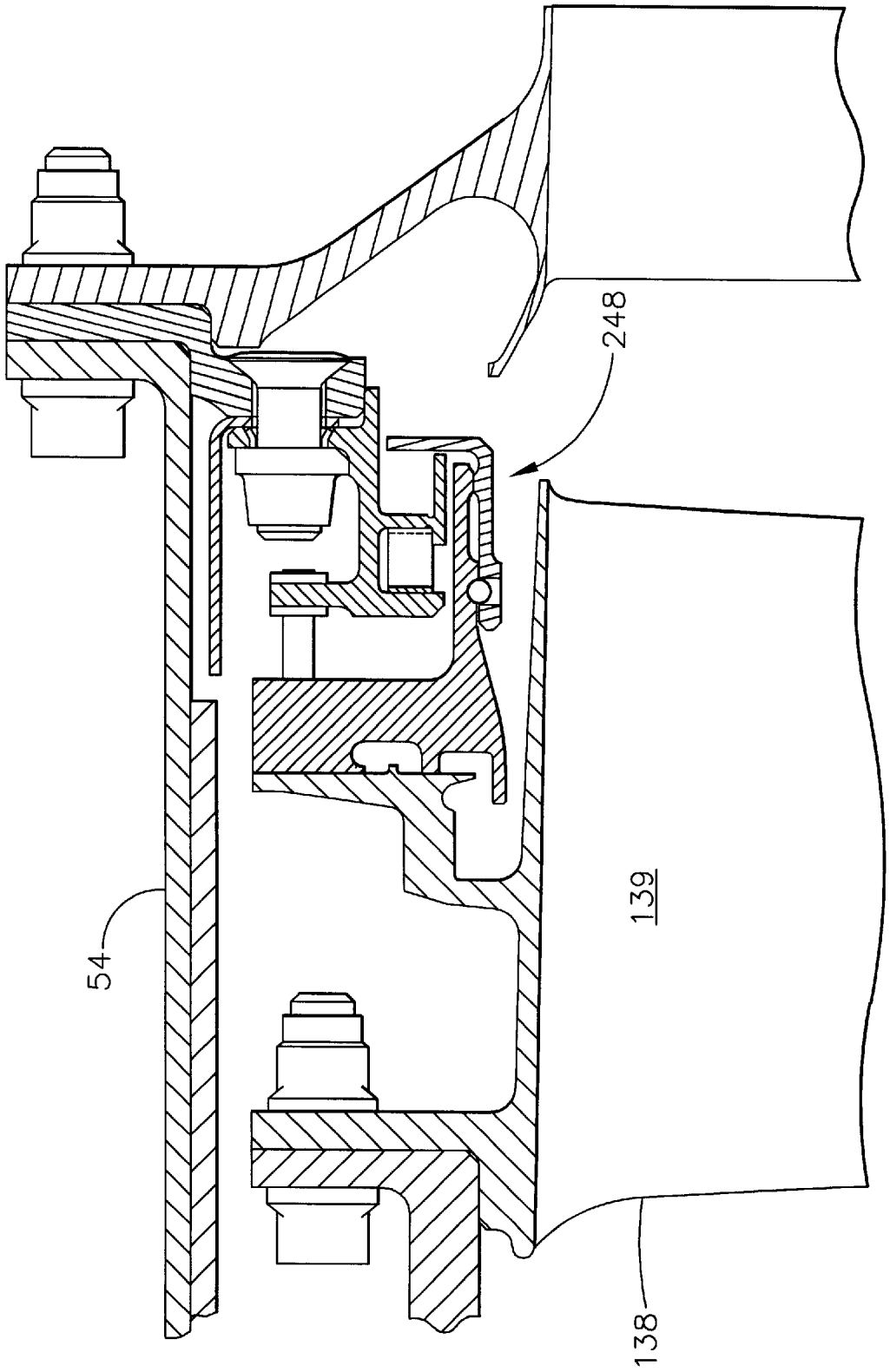

FIG. 10

AIRCRAFT ENGINE WITH INTER-TURBINE ENGINE FRAME SUPPORTED COUNTER ROTATING LOW PRESSURE TURBINE ROTORS

This invention herein described was made in the performance of work under a NASA contract and is subject to the provisions of section 305 of the National Aeronautics and Space Act of 1958, Public Law 85-568 (72 Stat. 435; 42 USC 2457).

BACKGROUND OF THE INVENTION

1. Field of the Invention

The invention relates to aircraft gas turbine engines with counter rotating low pressure turbine rotors and, particularly, for such engines having inter-turbine frames that support the counter rotating low pressure turbine rotors in bearings and are used to mount the engines to the aircraft.

2. Description of Related Art

A gas turbine engine of the turbofan type generally includes a forward fan and booster compressor, a middle core engine, and an aft low pressure power turbine. The core engine includes a high pressure compressor, a combustor and a high pressure turbine in a serial flow relationship. The high pressure compressor and high pressure turbine of the core engine are interconnected by a high pressure shaft. The high pressure compressor, turbine, and shaft essentially form the high pressure rotor. The high pressure compressor is rotatably driven to compress air entering the core engine to a relatively high pressure. This high pressure air is then mixed with fuel in the combustor and ignited to form a high energy gas stream. The gas stream flows aft and passes through the high pressure turbine, rotatably driving it and the high pressure shaft which, in turn, rotatably drives the compressor.

The gas stream leaving the high pressure turbine is expanded through a second or low pressure turbine. The low pressure turbine rotatably drives the fan and booster compressor via a low pressure shaft, all of which form the low pressure rotor. The low pressure shaft extends through the high pressure rotor. Some low pressure turbines have been designed with counter rotating turbines that power counter rotating fans and booster or low pressure compressors. U.S. Pat. Nos. 4,860,537, 5,307,622 and 4,790,133 disclose counter rotating turbines that power counter rotating fans and booster or low pressure compressors. Most of the thrust produced is generated by the fan. Engine frames including fan and turbine frames are used to support and carry the bearings which, in turn, rotatably support the rotors. Bearing support frames are heavy and add weight, length, and cost to the engine.

Large modern commercial turbofan engines have higher operating efficiencies with higher bypass ratio configurations, larger transition ducts between low pressure and high pressure turbines. The frames, especially those located in the engine hot section, are complex and expensive. Other mid-size turbofan engines eliminate one frame by providing HP rotor support through a differential bearing arrangement in which the high pressure rotor rides on the low pressure rotor with an inter-shaft or differential bearing between them. New commercial engine designs are incorporating counter rotating rotors for improved turbine efficiency. Counter rotating rotors can have a detrimental impact on high pressure ratio component clearances, especially in the hot section which rely on tight clearance control to provide fuel efficiency benefits. Consequently, a need exists for engine and bearing support that will reduce engine length, weight, and cost and still provide low tip clearance losses.

SUMMARY OF THE INVENTION

An aircraft gas turbine engine assembly includes a high pressure rotor including a high pressure turbine, a low pressure turbine having counter rotating low pressure inner and outer rotors located aft of the high pressure rotor, and an inter-turbine frame axially located between the high and low pressure turbines. The low pressure inner and outer rotors including low pressure inner and outer shafts which are at least in part rotatably disposed co-axially with and radially inwardly of the high pressure rotor. The inter-turbine frame has a first structural ring, a second structural ring disposed co-axially with and radially spaced inwardly of the first structural ring about a centerline, and a plurality of circumferentially spaced apart struts extending radially between the first and second structural rings. Forward and aft sump members, having forward and aft central bores respectively, are fixedly joined to axially spaced apart forward and aft portions of the inter-turbine frame by forward and aft bearing support structures, respectively. The low pressure inner and outer rotors are rotatably supported by an aftwardmost low pressure rotor support bearing mounted in the aft central bore of the aft sump member. The high pressure rotor is aftwardly radially rotatably supported by a fifth bearing mounted in the forward bearing support structure. A frame connecting means for connecting the engine to an aircraft is located on the first structural ring. In an exemplary embodiment of the invention, the connecting means includes at least one U-shaped clevis.

An outlet guide vane assembly supports a row of outlet guide vanes that extend radially between a low pressure turbine casing structurally connected to the inter-turbine frame and an annular box structure. A cover plate is bolted to the annular box structure. A rotatable annular outer drum rotor is drivingly connected to a first fan blade row and a first booster by the low pressure inner shaft. A rotatable annular inner drum rotor is drivingly connected to a second fan blade row and a second booster by the low pressure outer shaft, the first and second boosters are axially located between the first and second fan blade rows.

A bypass duct radially bounded by a fan casing and an annular radially inner bypass duct wall surrounds the first and second boosters and a radially outer portion of the second fan blade row is radially disposed within the bypass duct. The engine assembly has a fan inlet hub to tip radius ratio in a range between 0.20 and 0.35, a bypass ratio in a range of 5–15, an operational fan pressure ratio in a range of 1.4–2.5, and a sum of operational fan tip speeds of the first and second fan blade rows in a range of 1000 to 2500 feet per second. The high pressure compressor is designed and operable to produce a compressor pressure ratio in a range of about 15–30 and overall pressure ratio in a range of about 40–65.

Further embodiments of the invention include a second seal in sealing arrangement between forward ends of the low pressure turbine casing and the outer drum rotor, a third seal in sealing arrangement between the low pressure turbine casing and a final stage of the low pressure turbine blade rows which is bolted to an aft end of the outer drum rotor, and a first seal in sealing arrangement between the second fan and the fan frame. The seals are brush seals, however in other embodiments the seals may be non-contacting seals or a combination of brush seals and non-contacting seals. The non-contacting seals may be aspirating seals or face seals.

BRIEF DESCRIPTION OF THE DRAWINGS

The foregoing aspects and other features of the invention are explained in the following description, taken in connection with the accompanying drawings where:

FIG. **1** is a longitudinal sectional view illustration of exemplary embodiment of an aircraft turbofan gas turbine

engine with a counter rotating low pressure turbine supported by an inter-turbine frame axially located between the low pressure turbine and a high pressure turbine.

FIG. **2** is a longitudinal sectional view illustration of an alternative exemplary embodiment of an aircraft turbofan gas turbine engine with a two stage high pressure turbine and a counter rotating low pressure turbine supported by an inter-turbine frame axially located between the low pressure turbine and a high pressure turbine.

FIG. **3** is an enlarged view illustration of the inter-turbine frame and counter rotating low pressure turbine rotors of the engine in FIG. **1**.

FIG. **4** is an enlarged view illustration of a fan frame and forward bearings and sump of the engine in FIG. **1**.

FIG. **5** is an enlarged view illustration of a radially inner forward brush seal in the counter rotating low pressure turbine in FIG. **1**.

FIG. **6** is an enlarged view illustration of a radially outer forward brush seal in the counter rotating low pressure turbine in FIG. **1**.

FIG. **7** is an enlarged view illustration of an aft brush seal in the counter rotating low pressure turbine in FIG. **1**.

FIG. **8** is an enlarged view illustration of a radially inner forward non-contacting seal in the counter rotating low pressure turbine in FIG. **1**.

FIG. **9** is an enlarged view illustration of a radially outer forward non-contacting seal in the counter rotating low pressure turbine in FIG. **1**.

FIG. **10** is an enlarged view illustration of an aft non-contacting seal in the counter rotating low pressure turbine in FIG. **1**.

DETAILED DESCRIPTION OF THE INVENTION

Illustrated schematically in FIG. **1** is a first exemplary turbofan gas turbine engine **10** circumscribed about an engine centerline **8** and having a fan section **12** which receives inlet airflow of ambient air **14**. The fan section **12** has counter rotating first and second fans **4** and **6** including first and second fan blade rows **13** and **15** and counter rotating first and second boosters **16** and **17**, respectively. The counter rotating first and second boosters **16** and **17** are axially located between the counter rotating first and second fan blade rows **13** and **15**, an arrangement which provides reduced noise emanating from the fan section **12**. Following the fan section **12** is a high pressure compressor (HPC) **18**, a combustor **20** which mixes fuel with the air **14** pressurized by the HPC **18** for generating combustion gases which flow downstream through a high pressure turbine (HPT) **24**, and a counter rotating low pressure turbine (LPT) **26** from which the combustion gases are discharged from the engine **10**. The engine **10** is designed such that the last stage of the second booster **17** and, in the exemplary embodiment, the second fan blade row **15** are counter rotatable with respect to the high pressure compressor **18**. This reduces the sensitivity of the engine **10** to airflow inlet distortion of the fan section **12**. It also reduces mutual sensitivity to rotating stall cells in the other rotors.

A high pressure shaft **27** joins the HPT **24** to the HPC **18** to substantially form a first or high pressure rotor **33**. The high pressure compressor **18**, combustor **20**, and high pressure turbine **24** collectively are referred to as a core engine **25** which includes, for the purposes of this patent, the high pressure shaft **27**. The core engine **25** is modular such that as a single unit it can be independently replaced separate from the other parts of the gas turbine.

A bypass duct **21** radially, bounded by a fan casing **11** and a rotatable annular radially inner bypass duct wall **9**, surrounds the counter rotating first and second boosters **16** and **17** and an inlet duct **19** to the high pressure compressor **18** of the core engine **25**. The bypass duct **21** is radially bounded by a fan casing **11** and an annular radially inner bypass duct wall **9**. The radially inner bypass duct wall **9** includes a rotatable wall section **22** fixedly mounted to the second fan blade row **15** and from which the second booster **17** depends radially inwardly. A radially outer portion **23** of the second fan blade row **15** is radially disposed within the bypass duct **21**.

Referring now to FIGS. **1** and **3**, the counter rotating low pressure turbine **26** includes an annular outer drum rotor **136** rotatably mounted to a low pressure inner shaft **130** by an aft low pressure inner conical shaft extension **132**. The outer drum rotor **136** includes a plurality of low pressure turbine blade rows **138** extending radially inwardly therefrom and axially spaced from each other. The drum rotor **136** is cantilevered off of a final stage **139** of the low pressure turbine blade rows **138** which is bolted to the aft low pressure inner conical shaft extension **132**. The counter rotating low pressure turbine **26** also includes an annular low pressure inner drum rotor **146** rotatably mounted to a low pressure outer shaft **140** by an aft low pressure outer conical shaft extension **142**. The inner drum rotor **146** includes a plurality of second low pressure turbine blade rows **148** extending radially outwardly therefrom and axially spaced from each other. The first low pressure turbine blade rows **138** are interdigitated with the second low pressure turbine blade rows **148**.

The low pressure outer shaft **140** drivingly connects the inner drum rotor **146** to the second fan blade row **15** and the second booster **17**. The second fan blade row **15** is connected to the low pressure outer shaft **140** by a forward conical outer shaft extension **143**. The low pressure outer shaft **140**, the inner drum rotor **146**, the second fan blade row **15**, and the second booster **17** are major components of a low pressure outer rotor **202**. The low pressure inner shaft **130** drivingly connects the outer drum rotor **136** to the first fan blade row **13** and the first booster **16**. The first fan blade row **13** is connected to the low pressure inner shaft **130** by a forward conical inner shaft extension **133**. The low pressure inner shaft **130**, the outer drum rotor **136**, the first fan blade row **13**, and the first booster **16** are major components of a low pressure inner rotor **200**.

The first booster **16** includes an annular first booster rotor section **166** including the rotatable wall section **22** from which axially spaced apart first booster blade rows **168** extend radially inwardly. The annular first booster rotor section **166** is illustrated as being integrally bladed in a manner similar to an integrally bladed disk, commonly referred to as a Blisk, or an integrally bladed rotor which has been used in conventional rotors because they are lightweight and allow no blade attachment leakage. The operating low speeds of the boosters and the low weight integrally bladed disk design of the first booster rotor section **166** helps minimize stresses and deflections of the first booster rotor section **166**.

The second booster **17** includes an annular second booster rotor section **170** from which axially spaced apart second booster blade rows **172** extend radially outwardly. A radially inner portion **28** of the second fan blade row **15** is radially disposed within the inlet duct **19** and rotates with the second booster **17** and therefore is considered part of the second booster **17** and a second booster blade row **172**. The first and second booster blade rows **168** and **172** are interdigitated and are counter rotating. The first and second fan blade rows **13** and **15** are fixedly attached to the first and second booster rotor sections **166** and **170**, respectively. The low pressure inner and outer shafts **130** and **140**, respectively, are at least, in part, rotatably disposed co-axially with and radially inwardly of the high pressure rotor **33**.

The engine **10** has frame structure **32** including a forward or fan frame **34** connected by an engine casing **45** to a mid-engine or inter-turbine frame **60**. The second fan blade row is axially located close to struts **35** of the fan frame **34** and so the leading edges of struts **35** are swept or leaned axially aftwardly to reduce noise. The engine **10** is mounted within or to an aircraft such as by a pylon (not illustrated) which extends downwardly from an aircraft wing. The inter-turbine frame **60** includes a first structural ring **86**, which may be a casing, disposed co-axially about the centerline **8**. The inter-turbine frame **60** further includes a second structural ring **88** disposed co-axially with and radially spaced inwardly of the first structural ring **86** about the centerline **8**. The second structural ring **88** may also be referred to as a hub. A plurality of circumferentially spaced apart struts **90** extend radially between the first and second rings **86** and **88** and are fixedly joined thereto. The struts **90** are hollow in the exemplary embodiment of the invention illustrated herein but, in other embodiments, the struts may not be hollow. Because the inter-turbine frame **60** is axially located between the HPT **24** and the LPT **26** of the high pressure rotor **33** and the low pressure inner and outer rotors **200** and **202**, it is referred to as an inter-turbine frame also sometimes referred to as a mid-engine frame. An. inter-turbine transition duct **114** between the HPT **24** and the LPT **26** passes through the inter-turbine frame **60**.

The engine is mounted to the aircraft at a forwardly located fan frame forward mount **118** on the fan frame **34** and at an aftwardly located turbine frame aft mount **120** on the inter-turbine frame **60**. The engine **10** may be mounted below an aircraft wing by a pylon at the forward mount **118** and the aft mount **120** spaced axially downstream from the forward mount **118**. The aft mount **120** is used to fixedly join the inter-turbine frame **60** to a platform which is fixedly joined to the pylon. In the exemplary embodiment of the invention illustrated herein, the aft mount **120** includes a U-shaped clevis **122**. Conventional mounts often use a set of circumferentially spaced apart U-shaped devises **122** (only one of the U-shaped devises is shown in the cross-sectional illustrations in the FIGS.) on the inter-turbine frame **60**. The U-shaped devises **122** are designed to be connected by a set of pins to a set of links. The links are connected to a platform on the bottom of the pylon. The U-shaped devises **122** are one type of frame connecting means for connecting the engine to an aircraft. Other types of mounting means besides devises are known in the aircraft industry and can be utilized to mount the frame of the present invention and the engine to the aircraft.

Referring more particularly to FIG. **4**, the low pressure outer rotor **202**, by way of the forward conical outer shaft extension **143**, is rotatably supported axially and radially from the fan frame **34** by an aft thrust bearing **43** mounted in a first bearing support structure **44** and a second bearing **36**, a roller bearing, mounted in a second bearing support structure **47**. The low pressure inner rotor **200**, by way of the forward conical inner shaft extension **133**, is rotatably supported axially and radially from the fan frame **34** by a forward differential thrust bearing **55** which is mounted between a forwardly extending extension **56** of the forward conical outer shaft extension **143** and the forward conical inner shaft extension **133**. The low pressure inner rotor **200** is further rotatably supported radially from the fan frame **34** by a forward differential bearing **208**, a roller bearing, between the low pressure inner shaft **130** and the low pressure outer shaft **140**. The first and second bearing support structures **44** and **47** are fixedly attached to the fan frame **34**.

Referring more particularly to FIG. **3**, the low pressure outer rotor **202**, by way of the aft low pressure outer conical shaft extension **142** connected to the low pressure outer shaft **140**, is rotatably supported radially by a third bearing **76** within the inter-turbine frame **60**. The third bearing **76** is disposed between an aft bearing support structure **97** attached to an aft portion **110** of the inter-turbine frame **60** and a forward inner extension **190** of the aft low pressure outer conical shaft extension **142**. The low pressure outer rotor **202** is most aftwardly rotatably supported by the third bearing **76** which is thus referred to as an aftwardmost low pressure rotor support bearing. The inter-turbine frame **60** of the present invention is axially located between the HPT **24** and the LPT **26** and thus substantially supports the entire low pressure turbine **26**.

The low pressure inner rotor **200**, by way of the aft low pressure inner conical shaft extension **132** connected to the low pressure inner shaft **130**, is rotatably supported radially by the aft low pressure outer conical shaft extension **142** of the low pressure outer rotor **202**. A differential bearing **144** (also referred to as an inter-shaft bearing) is disposed between an aft inner extension **192** of the aft low pressure outer conical shaft extension **142** and an outer extension **194** of the aft low pressure inner conical shaft extension **132**. This allows the low pressure inner and outer rotors **200** and **202** to counter rotate.

Referring to FIG. **1**, a forward high pressure end **70** of the high pressure compressor **18** of the high pressure rotor **33** is radially rotatably supported by a bearing assembly **80** mounted in a bearing assembly support structure **82** attached to the fan frame **34**. Referring more particularly to FIG. **3**, an aft end **92** of the high pressure rotor **33** is aftwardly radially rotatably supported by a fifth bearing **94** mounted in a forward bearing support structure **96** attached to a forward portion **108** of the inter-turbine frame **60**. The forward and aft bearing support structures **96** and **97** which are fixedly joined or attached to the forward and aft portions **108** and **110**, respectively, of the inter-turbine frame **60** and thus are spaced axially apart. The forward and aft portions **108** and **110**, respectively, of the inter-turbine frame **60** are separated by the second structural ring **88**.

Forward and aft sump members **104** and **106** are joined to the inter-turbine frame **60** and carried by forward and aft bearing support structures **96** and **97**. The forward and aft sump members **104** and **106** support the fifth bearing **94** and the third bearing **76** in forward and aft cylindrical central bores **84** and **85**, respectively, of the sump members. The fifth bearing **94** and the third bearing **76** have forward and aft fixed outer races **176** and **178** that are fixedly connected to the forward and aft bearing support structures **96** and **97**, respectively.

Located aft of the LPT **26** is an outlet guide vane assembly **150** which supports a stationary row of outlet guide vanes **152** that extend radially inwardly between a low pressure turbine casing **54** and an annular box structure **154**. The outlet guide vane assembly **150** deswirls gas flow exiting the LPT **26**. The low pressure turbine casing **54** connected is bolted to the engine casing **45** at the end of the inter-turbine transition duct **114** between the HPT **24** and the LPT **26**. A dome-shaped cover plate **156** is bolted to the annular box structure **154**. The outlet guide vane assembly **150** is not referred to and does not function as a frame because it does not rotatably support any of the engine's rotors.

The aft sump member **106** has a first radius R1 from the engine centerline **8** that is substantially greater than a second radius R2 of the forward sump members **104**. The first radius R1 may be in a range of **150** to **250** percent larger than the second radius R2. The aft sump member **106** is located radially from the engine centerline **8** a distance that is substantially greater than the distance in similarly sized prior engines. This helps stiffen the third bearing **76** in the aft central bore **85** as does the forward and aft bearing support

structures **96** and **97** being axially spaced apart and fixedly joined to forward and aft portions **108** and **110** of the inter-turbine frame **60**, respectively, and separated by the second structural ring **88**. These design features improve maneuver clearances by increasing stiffness of the support of the third bearing **76** and the differential bearing **144** which rotatably support the inner drum rotor **146** and the annular outer drum rotor **136**, respectively, of the LPT **26**.

Illustrated schematically in FIG. **2** is an alternative turbofan gas turbine engine **10** configuration having a two stage high pressure turbine **324** having two stages of high pressure turbine blades **326** and a row of high pressure turbine vanes **328** as opposed to the turbofan gas turbine engine **10** illustrated in FIGS. **1** and **3** in which the HPT **24** is a single stage high pressure turbine with a single stage of HPT blades **326**. This illustrates how significant engine thrust growth can be achieved with no change in fan diameter D. Thrust grow may be achieved by increasing a design fan pressure ratio across the second fan blade rows **15** stage with the same fan casing or fan diameter D as with the single stage high pressure turbine. This allows for a family of engines based on substantially the same engine architecture and basic components. The fan diameter D of all the engines **10** in the family would be substantially the same. At least two different engine models in the family would have either the one stage high pressure turbine **24** or the two stage high pressure turbine **324** of the core engine **25**.

The high pressure compressor **18** of turbofan gas turbine engine **10** of the present invention is operable and designed to operate with a relatively high compressor pressure ratio in a range of about 15–30 and an overall pressure ratio in a range of about 40–65. The compressor pressure ratio is a measure in the rise of pressure across just the high pressure compressor **18**. The overall pressure ratio is a measure in the rise of pressure across the fan all the way through the high pressure compressor **18**, i.e., it is a ratio of pressure exiting the high pressure compressor divided by pressure of ambient air **14** entering the fan section **12**. The high pressure compressor **18** is illustrated having six high pressure stages **48** and three variable vane stages **50** for the first four of the high pressure stages **48**. Less than four variable vane stages **50** may be used. The high pressure compressor **18** has a relatively small number of the high pressure stages **48** and the invention contemplates using between 6–8 of the high pressure stages and about four of the variable vane stages 50 or less. This makes for a short engine while still having a high overall pressure ratio in a range of 40–65.

The engine has a design bypass ratio in a range of 5–15 and a design fan pressure ratio in a range of 1.4–2.5. The counter rotating first and second fan blade rows **13** and **15** are designed to operate with tip speeds that, for the two blade rows, sum to a range of about 1000 to 2500 ft/sec which allows the use of light weight composite fan blades. Light weight, uncooled, high temperature capability, counter rotating ceramic matrix composite (CMC) airfoils may be used in the counter rotating low pressure turbine **26**. Thus the engine **10** and the fan section **12** may be described as having a sum of operational fan tip speeds of the first and second fan blade rows **13** and **15** in a range of 1000 to 2500 feet per second.

Illustrated in FIG. **1**, is a tip radius RT, as measured from the engine centerline **8** to a fan blade tip **230** of the first fan blade row **13** and a hub radius RH as measured from the engine centerline **8** to a rotor hub **234** of the low pressure inner rotor **200** at an entrance **235** to the inlet duct **19** to the high pressure compressor **18** of the core engine **25**. The engine **10** of the present invention may be designed with a small fan inlet hub to tip radius ratio (RH/RT) in a range between 0.20 and 0.35. For a given set of fan inlet and inlet duct annulus areas a low fan inlet hub to tip radius ratio allows a smaller fan diameter when compared to a larger ratio. However, fan inlet hub to tip radius ratio levels are constrained by the ability to design a disk to support the rotating fan blades. The fan blades in the exemplary embodiment illustrated herein are made of lightweight composite materials or aluminum and rotor fan tip speeds are designed so that a fan disk **240** can be designed for the fan inlet hub to tip radius ratio to be as low as 0.20. The low fan inlet hub to tip radius ratio allows low slopes and short lengths of the core engine transition duct **242** between the fan section **12** and the high pressure compressor **18** and of the inter-turbine transition duct **114** between the HPT **24** and the LPT **26**.

Oil lubrication and scavenging of oil for the differential bearing **144** is accomplished by routing oil through supply and return orifices **220** and **222**, respectively, at low stress location on the aft low pressure outer conical shaft extension **142** as illustrated in FIGS. **1**, **3**, and **4**. This feature helps strengthen the rotors and allow the use of only two bearing support frames, the fan and inter-turbine frames, for the 3 spool design with counter rotating low pressure turbines and rotors.

Sealing of the counter rotating low pressure rotors to booster and LPT cases is enhanced by the use of brush seals or other high efficiency seals. Illustrated in FIG. **5** is a first brush seal **223** disposed in sealing arrangement between the second fan **6** and the fan frame **34**. Illustrated in FIG. **6** is a second brush seal **224** disposed in sealing arrangement between forward ends **226** of the low pressure turbine casing **54** and the outer drum rotor **136**. Illustrated in FIG. **7** is a third brush seal **225** disposed in sealing arrangement between an aft end **228** of the low pressure turbine casing **54** and the final stage **139** of the low pressure turbine blade rows **138** which is bolted to the outer drum rotor **136**. An alternative to the brush seals are non-contacting seals such as aspirating seals or face seals in some or all of the above locations. Illustrated in FIG. **8** is a first non-contacting seal **244** disposed in sealing arrangement between the second fan **6** and the fan frame **34**. Illustrated in FIG. **9** is a second non-contacting seal **246** disposed in sealing arrangement between forward end **226** of the low pressure turbine casing **54** and the outer drum rotor **136**. Illustrated in FIG. **10** is a third non-contacting seal **248** disposed in sealing arrangement between an aft end **228** of the low pressure turbine casing **54** and the final stage **139** of the low pressure turbine blade rows **138** which is bolted to the outer drum rotor **136**. In other embodiments the seals may be a combination of brush seals and non-contacting seals.

The present invention has been described in an illustrative manner. It is to be understood that the terminology which has been used is intended to be in the nature of words of description rather than of limitation. While there have been described herein, what are considered to be preferred and exemplary embodiments of the present invention, other modifications of the invention shall be apparent to those skilled in the art from the teachings herein and, it is, therefore, desired to be secured in the appended claims all such modifications as fall within the true spirit and scope of the invention.

Accordingly, what is desired to be secured by Letters Patent of the United States is the invention as defined and differentiated in the following claims:

What is claimed is:

1. An aircraft gas turbine engine assembly comprising:

a high pressure rotor including a high pressure turbine,

a low pressure turbine having counter rotating low pressure inner and outer rotors located aft of said high pressure rotor,

an inter-turbine frame axially located between said high and low pressure turbines,

said low pressure inner and outer rotors including low pressure inner and outer shafts which are at least in part rotatably disposed co-axially with and radially inwardly of said high pressure rotor,

said inter-turbine frame comprising;

a first structural ring,

a second structural ring disposed co-axially with and radially spaced inwardly of said first structural ring about a centerline,

a plurality of circumferentially spaced apart struts extending radially between said first and second structural rings,

forward and aft sump members having forward and aft central bores,

said forward and aft sump members fixedly joined to axially spaced apart forward and aft portions of said inter-turbine frame by forward and aft bearing support structures respectively,

said low pressure inner and outer rotors rotatably supported by an aftwardmost low pressure rotor support bearing mounted in said aft central bore of said aft sump member,

said high pressure rotor is aftwardly radially rotatably supported by a fifth bearing mounted in said forward bearing support structure, and

a frame connecting means for connecting said engine to an aircraft located on said first structural ring.

2. An assembly as claimed in claim **1** wherein said frame connecting means includes at least one U-shaped clevis.

3. An assembly as claimed in claim **1** further comprising an outlet guide vane assembly supporting a row of outlet guide vanes that extend radially between a low pressure turbine casing structurally connected to said inter-turbine frame and an annular box structure.

4. An assembly as claimed in claim **3** wherein said frame connecting means includes at least one U-shaped clevis.

5. An assembly as claimed in claim **4** further comprising a cover plate bolted to said annular box structure.

6. An assembly as claimed in claim **3** further comprising:

a rotatable annular outer drum rotor drivingly connected to a first fan blade row and a first booster by said low pressure inner shaft,

a rotatable annular inner drum rotor drivingly connected to a second fan blade row and a second booster by said low pressure outer shaft,

said first and second boosters are axially located between said first and second fan blade rows,

a bypass duct radially bounded by a fan casing and an annular radially inner bypass duct wall surrounding said first and second boosters, and

a radially outer portion of said second fan blade row is radially disposed within said bypass duct.

7. An assembly as claimed in claim **6** wherein said frame connecting means includes at least one U-shaped clevis.

8. An assembly as claimed in claim **7** further comprising a cover plate bolted to said annular box structure.

9. An assembly as claimed in claim **6** further comprising:

a fan inlet hub to tip radius ratio in a range between 0.20 and 0.35,

a high pressure compressor of said high pressure rotor drivenly connected to said high pressure turbine by a high pressure shaft,

said high pressure compressor having an overall operating pressure ratio in a range-of about 40–65, and

a bypass ratio in a range of 5–15, an operational fan pressure ratio in a range of 1.4–2.5, and a sum of operational fan tip speeds of said first and second fan blade rows in a range of 1000 to 2500 feet per second.

10. An assembly as claimed in claim **9** wherein said frame connecting means includes at least one U-shaped clevis.

11. An assembly as claimed in claim **10** further comprising a cover plate bolted to said annular box structure.

12. An assembly as claimed in claim **6** further comprising a second seal in sealing arrangement between forward ends of the low pressure turbine casing and the outer drum rotor.

13. An assembly as claimed in claim **12** further comprising a third seal in sealing arrangement between said low pressure turbine casing and a final stage of said low pressure turbine blade rows which is bolted to an aft end of said outer drum rotor.

14. An assembly as claimed in claim **13** further comprising a first seal in sealing arrangement between said second fan and said fan frame.

15. An assembly as claimed in claim **14** wherein said seals are brush seals.

16. An assembly as claimed in claim **14** wherein said seals are non-contacting seals.

17. An assembly as claimed in claim **14** wherein said seals are brush seals or non-contacting seals.

18. An assembly as claimed in claim **14** wherein said non-contacting seals are aspirating seals or face seals.

19. An assembly as claimed in claim **14** further comprising:

a fan inlet hub to tip radius ratio in a range between 0.20 and 0.35,

a high pressure compressor of said high pressure rotor drivenly connected to said high pressure turbine by a high pressure shaft,

said high pressure compressor having an overall operating pressure ratio in a range of about 40–65, and

a bypass ratio in a range of 5–15, an operational fan pressure ratio in a range of 1.4–2.5, and a sum of operational fan tip speeds of said first and second fan blade rows in a range of 1000 to 2500 feet per second.

20. An assembly as claimed in claim **19** wherein said frame connecting means includes at least one U-shaped clevis.

21. An assembly as claimed in claim **20** further comprising a cover plate bolted to said annular box structure.

* * * * *