View metadata, citation and similar papers at core.ac.uk

brought to you by CORE

provided by NASA Technical Reports Server

Planning, Creating and Documenting a NASTRAN Finite Element Model of a Modern Helicopter

R. Gabel, D. Reed, R. Ricks, W. Kesack

Boeing Vertol Company

Philadelphia, Pennsylvania

Abstract

Mathematical models based on the finite element method of structural analysis as embodied in the NASTRAN computer code are widely used by the helicopter industry to calculate static internal loads and vibration of airframe structure. The internal loads are routinely used for sizing structural members. The vibration predictions are not yet relied on during design. NASA's Langley Research Center sponsored a program to conduct an application of the finite element method with emphasis on predicting structural vibration. The Army/Boeing CH-47D helicopter was used as the modeling subject. The objective was to engender the needed trust in vibration predictions using these models and establish a body of modeling guides which would enable confident future prediction of airframe vibration as part of the regular design process.

Introduction

A better capability to calculate vibration of helicopters is a recognized industry goal. More reliable and accurate analysis methods and computer aids can lead to reduced developmental risk, improved ride comfort and fatigue life and even increased airspeeds. An important element in the overall vibration calculation is the finite element airframe model. Under a NASA Langley Contract, Boeing Vertol Company performed the program enunciated by the title of this paper, that is, the planning, creating and documenting of a NASTRAN finite element vibration model of a modern helicopter. Further, test requirements were established and a ground shake test performed to validate the model. An unusual requirement of the contract was that each major step of the program be presented to and critiqued by the Industry.

The contract consisted of two phases with multiple tasks in each phase:

- Phase I. Planning, Creating and Documenting A Helicopter NASTRAN Model

  Task 1 Planning
  Task 2 Modeling
  Task 3 Test Requirements
  Task 4 Industry Critique

Presented at the Second Decennial Specialist's Meeting on Rotorcraft Dynamics, AHS/NASA Ames, Moffett Field, CA, Nov. 8, 1984.

- Phase II: Vibration Test to Verify a Helicopter NASTRAN Model

  Task 1 Aircraft Ground Shake Test
  Task 2 Industry Critique
  Task 3 Report

Functions of the Finite Element Models (FEM's)

The forming of FEM's have become almost routine for new helicopter airframes. But to step back a moment, why are they being formed? ... what are the current uses after they are formed? ... and what are the future uses as the technology improves and the degree of correlation advances? "Today's" functions of the finite element model (FEM) static models are shown in Figure 1. They are commonly used to calculate fuselage internal loads. What formerly was an extensive job involving months of effort by many Stress engineers has been reduced to routine running of cases once the FEM is prepared. Then the same model can be the basis for a vibration model.

	FUNCTION	TECHNICAL DECISION IMPACT
TODAY	• USE STATIC FEM MODEL TO CALCULATE INTERNAL LOADS – THE CRITICAL LOADS ON EACH AIRFRAME ELEMENT TO PERMIT SIZING AND STRESS ANALYSIS	• MAJOR, FEM INTERNAL DESIGN LOADS USED – REDUCES STRESS MANLOADING FOR INTERNAL LOAD CALCULATIONS
TODAY	• STATIC MODEL USED AS BASIS FOR THE VIBRATION MODEL	• BASIS FOR MODEL LEADING TO VIBRATION CONFIGURATION DECISIONS – NOT COMMONLY DONE YET
FUTURE	• USE STATIC MODEL TO CALCULATE DEFLECTIONS	• OCCASIONAL USE
FUTURE	• CALCULATE AIRFRAME FATIGUE LOADS	• NONE YET – FUTURE CAPABILITY

Figure 1. Functions of Static Finite Element Models

"Future" functions of the FEM include calculation of airframe fatigue loads. Field problems with airframes often involve cracking of skin panels or stiffeners from vibratory loads. Early prediction and correction of such problems would be a useful improvement to the aircraft.

For vibration models, the categories of functions can be discerned for the engineering development of helicopters. These are (1) guiding structural design so as to avoid resonance with rotor exciting frequencies, (2) predicting flight forced vibration levels, and (3) supporting design of vibration control devices.

PRECEDING PAGE BLANK NOT FILMED

There are two "Today" functions in Figure 2 which are in routine use. The first row is the function to predict and control resonances in the basic design. Three forcing frequencies are addressed; 1/rev, b/rev and 2b/rev. By far the most severe and limiting vibration occurs at b/rev. However, even relatively low vibration levels at 1/rev can be annoying. 2b/rev levels are next in importance, and can be significant when seeking very low overall vibration. FEM's are employed at the detail design stages to check proximity of the lower natural modes to 1/rev. If analysis indicates a proximity which is judged to be a concern, the procedure would be to utilize the analysis to explore corrective structural changes and to implement these changes in the design before construction. The changes could affect both the structural arrangement and the structural gages.

FUNCTION	TECHNICAL DECISION IMPACT
• PREDICT NATURAL FREQUENCY PLACEMENT AND • MODIFY DESIGN BEFORE DRAWING RELEASE TO ASSURE REQUIRED NATURAL FREQUENCY PLACEMENT	• MINOR FOR b/REV AND 2b/REV CREDIBILITY FOR THESE HIGHER MODES POOR SO GENERALLY LITTLE IMPACT • MODERATE FOR 1/REV AND AEROELASTIC MODES SOME RECOGNITION IN AVOIDING THESE PROBLEMS BEFORE DRAWING RELEASE
• IDENTIFY STRUCTURAL MODEL MODIFICATIONS IN ANTICIPATION OF NEED FOR IMPROVED TUNING AFTER SHAKE TEST OR FLIGHT TEST	• MODERATE SOME USE FOR PREPARING HARDWARE READY FOR SHAKE TEST OR FLIGHT TEST FREQUENCY TUNING
• PREDICT FORCED VIBRATION UNDER INDIVIDUAL UNIT LOADS (I.E. INDIVIDUAL ROTOR LOAD DIRECTION CROWN PRESSURE) AND • MODIFY DESIGN BEFORE DRAWING RELEASE TO ACHIEVE MINIMUM FORCED G'S	• NONE FUTURE FUNCTION
• PREDICT UNTREATED FORCED VIBRATION AND • MODIFY DESIGN BEFORE DRAWING RELEASE TO ACHIEVE MINIMUM FORCED G'S	• NONE - FUTURE FUNCTION
• DETERMINE SIZE AND EFFECTIVENESS OF VIBRATION TREATMENT DEVICES	• NONE - OCCASIONAL AIRFRAME ABSORBER SIZING
• PREDICT TREATED FLIGHT VIBRATION AND • MODIFY TREATED DESIGN BEFORE DRAWING RELEASE TO MEET FLIGHT VIBRATION SPEC.	• NONE - FUTURE FUNCTION

Figure 2. Functions of Vibration Finite Element Models

The FEM is almost certainly applied during detail design to check for proximity of any of the higher airframe modes with b/rev. But, based on today's perspective it is not so predictable what actions engineers would undertake preceding prototype fabrication if a proximity of concern should be indicated by the analysis. Two reasons for the uncertainty are present: (1) higher mode behavior of the airframe has been regarded as difficult to predict, and (2) due to weaknesses of the currently available tools to predict vibration levels of the coupled rotor/airframe system it could be difficult to reach a consensus on whether any predicted coincidence of a natural frequency with b/rev reflects a real problem. There has, however, been some use of FEM for estimation of the effectiveness of stiffening hardware in raising natural frequencies. This is perceived to be more dependable because only the delta frequency rather than the absolute frequency is used.

For the future, it is expected that forced vibration from individual rotor vibratory loads and from combined rotor loads will be predicted on a routine basis. Not only will they be predicted, but the airframe design will be iterated before drawing release to minimize forced vibration levels.

Modeling Plan

As a counterpoint to most modeling efforts, this program emphasized the planning of the modeling as the prime portion of the effort. All of us have modeled by spreading out the drawings and getting down to work, typically without a very clear idea of where we were headed. In contrast to this, the NASA Technical Monitor insisted on a well thought out plan of attack, accompanied by detailed preplanned instructions, labeled "guides". These guides defined the modeling approach for each type of structure-frames, stringers, rotor shafts, etc. Even the documentation of the modeling had to be preplanned. A very extensive modeling plan report, Ref.(1) was published. The plan was reviewed by other Industry representatives prior to undertaking the actual modeling. Another unique feature was that at the end of the modeling, deviations from the planned guides due to cause were reported.

The objectives of the modeling plan were as follows:

- Define guides for modeling, coding, documenting and demonstrating (1) stress (static) modeling, (2) mass modeling, and (3) vibration modeling (by modification of the stress model).
- Establish the organization, schedule and resources for performing detailed finite element modeling of a CH-47D helicopter.
- Identify and discuss the functions of finite element vibration models in the design process.
- Provide for plan critique by the industry.

Modeling Guides

Guides for static, mass and vibration modeling were developed. These included

- Node and element numbering
- Frame, stringer, skin treatment.
- Rotor shaft and transmission modeling.
- Concentrated and distributed masses.
- Changes from the static model to form a vibration model.

ORIGINAL PAGE IS
OF POOR QUALITY

The aircraft was first divided into major areas for convenience in scheduling and tracking FEM activities. For the CH-47D, the breakdown was as shown in Figure 3.

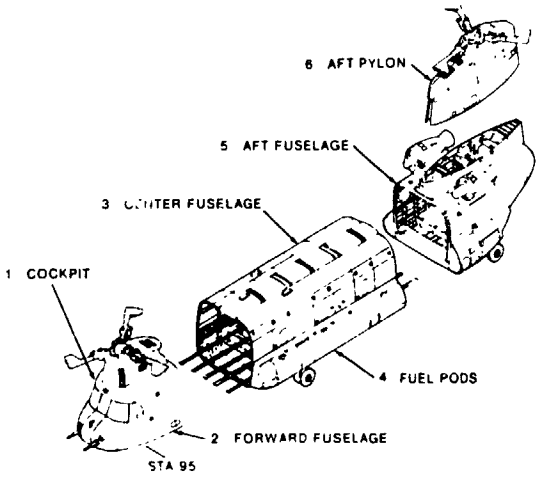

Figure 3. Breakdown into Major Areas for Static Modeling

A logical grid and element numbering scheme was selected to permit traceback of the elements. Blocks of numbers were assigned to major sections as indicated in Figure 4.

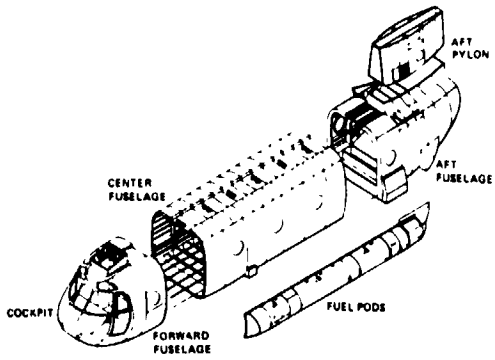

AIRCRAFT SECTION	COCKPIT	FORWARD FUSELAGE	CENTER FUSELAGE	FUEL PODS	AFT FUSELAGE	AFT PYLON
GRID NUMBERS	101 TO 300	301 TO 600	601 TO 1600	1601 TO 2000	2001 TO 2600	2601 TO 2900
ELEMENT NUMBERS	1 TO 1000	1001 TO 2000	2001 TO 6000	6001 TO 7000	7001 TO 9000	9001 TO 9999

Figure 4. Node and Element Numbering Scheme

Detail guides for modeling were described. Several typical guides are illustrated in Figures 5 and 6.

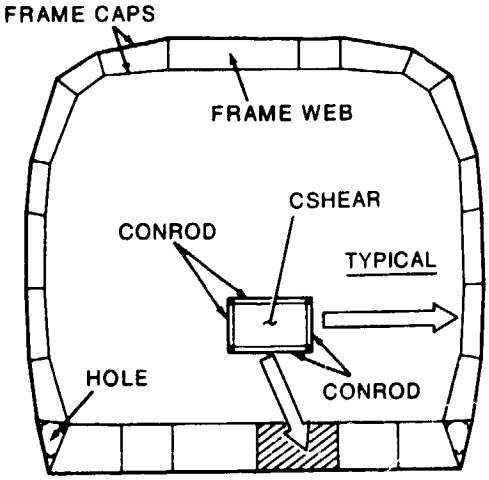

STRUCTURAL COMPONENT	TYPE OF LOADING	ELEMENT TYPE
CAP/STIFFENER	AXIAL	CONROD
WEBS	SHEAR	CSHEAR

Figure 5. Static Modeling Guides - Frames

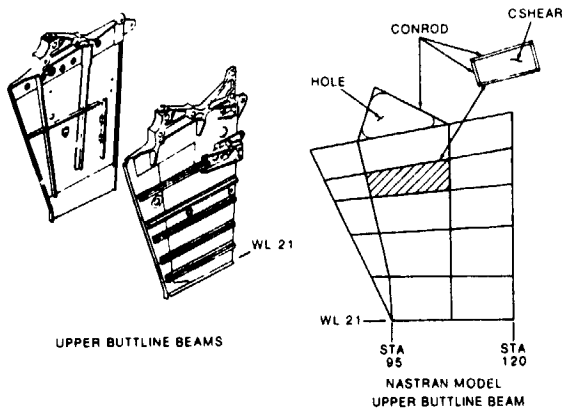

Figure 6. Static Modeling Guides - Bulkheads, Decks, and Butt-Line Beams

The mass modeling procedure is summarized in Figure 7. Mass data for the aircraft were first compiled on a standard weights tape per MIL-STD-451 or MIL-STD-1374. Masses were then divided into concentrated items and distributed items. Concentrated items such as transmissions and engines were allocated to individual NASTRAN nodes of the static model. Distributed items, structure, wiring etc., were allocated to frame stations by Boeing program W-17, and then manually distributed to nodes at that station.

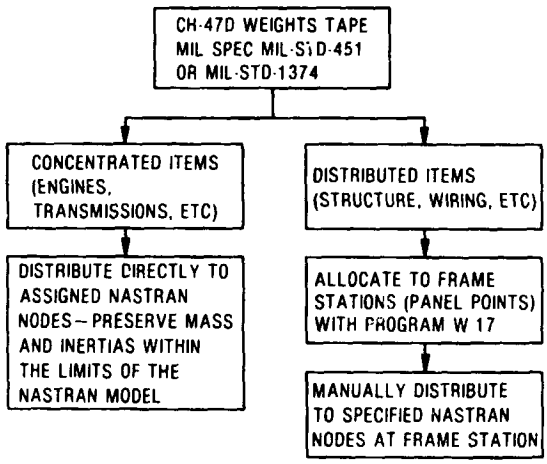

Figure 7. Mass Modeling Guides

The planning effort highlighted the fact that a good static model may serve as the vibration model with relatively small changes as shown in Figure 8.

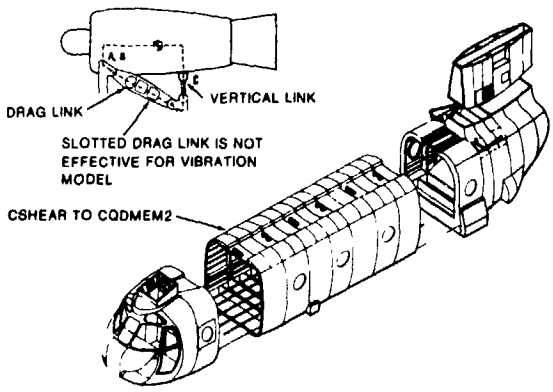

Figure 8. Vibration Modeling Guides - Changes from Static to Vibration FEM

The vibration model used CQDMEM2 elements to include the axial stiffening effectiveness of skin panels and webs, which were neglected in the static model by the use of CSHEAR elements. The logic was that under limit loads, the skins buckle and do not contribute much to axial stiffness. In the vibration case under 1g static loads, the skins are unbuckled and effective.

Documentation

An important aspect was the documentation plan, Figure 9. Quite often, modeling and documentation are done on an "as I get to it" basis. In this program, all of the steps were preplanned. The documentation was planned at four levels: overview, major sections, subsection breakdowns and modeling details. The documentation was to provide a clear illustration of each major area being modeled, a clear illustration of particular details

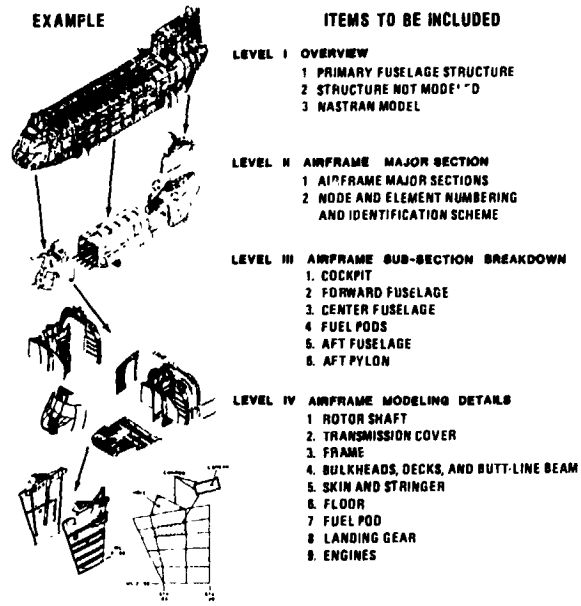

Figure 9. Formal Documentation Plan for Static Modeling

being modeled, its relationship to the major area and its corresponding NASTRAN model, and the rationale for modeling assumptions along with the details of section property computations.

Industry Critique of Modeling Plan

In an approach which is becoming more common in government supported research, other industry members participated in the program.

Boeing, the prime contractor, was required to subcontract to other major helicopter manufacturers, a series of review tasks. Bell, Hughes and Sikorsky were the participants. Upon completion of the modeling plan, Boeing briefed the subcontractors at their own sites, and reviewed verbal and written commentary on what the others thought of the plan from their own background of experience.

Examples of the comments were:

- the use of substructuring via superelements was suggested for cost and time saving.
- a more detailed mass model was recommended
- stringer lumping to save complexity and cost was questioned.
- the forward transmission cover model was too simplified
- procedures for checking the model should have been defined, such as SPC checks, rigid body checks etc.

This review procedure was repeated later for the test plan, and for the analytical correlation.

ORIGINAL PAGE IS
OF POOR QUALITY

Actual Modeling Experience

The static model was prepared by a senior stress engineer and a technician working from the drawings of the CH-47D. Figure 10 shows the final NASTRAN model of the aircraft with the statistics indicated.

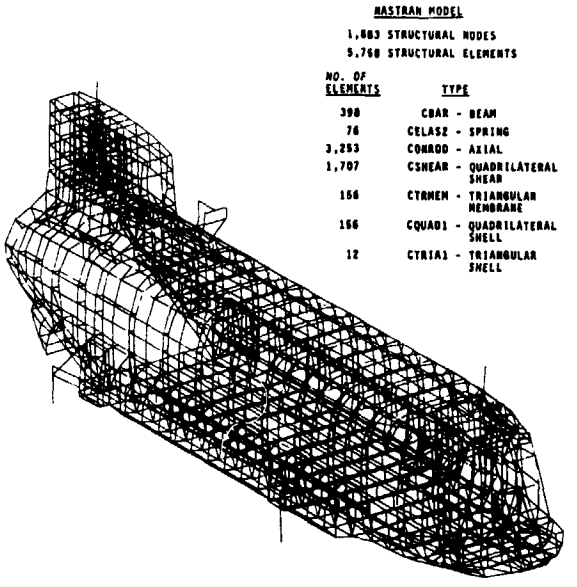

Figure 10. CH-47D NASTRAN Structural Model

The planned numbering system, previously presented in Figure 4, was straightforward, easily applied, and required a maximum of only four digits for grid points and five digits for elements. In the case of the grid points, sequential numbering was possible which facilitated checking for missing points in the listing. Capability was provided for independent modeling (except at interfaces) of the major airframe sections which is a necessary feature for rapid development of a model.

There were disadvantages turned up. The locations of nodes and elements were not obvious from the numbers. Only general location was implied by the block number. Any later revisions or additions tended to disrupt the numbering sequence and patterns. A principal difficulty was the estimation of the number block sizes. If sufficient space was not allocated, the numbering sequence was interrupted. Estimating an adequate number of grid points was relatively simple, but estimating sufficient space for the elements was difficult. This situation could have been partially alleviated by coding the element types which then would have made the full block of numbers available for each element type. The system of using station numbers in the code is probably the best, although it increases the size of the identification numbers.

Details of a typical subassembly static modeling task are illustrated by the model of the forward rotor shaft and transmission in Figure 11.

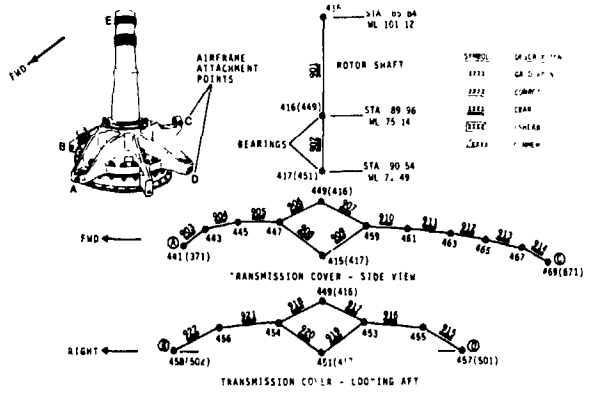

Figure 11. Static Modeling of Forward Rotor Shaft and Transmission Cover

The rotor shaft was represented by two CBAR elements with node points at the bearing locations. A cruciform structure comprised of CBAR elements was used to model the transmission cover. The cover model provided bearing node points to support the rotor shaft, and node points at the airframe attachments. Bending stiffness of the transmission cover legs was represented by the four legs of the cruciform model.

Modeling details of a typical center fuselage frame are shown in Figure 12.

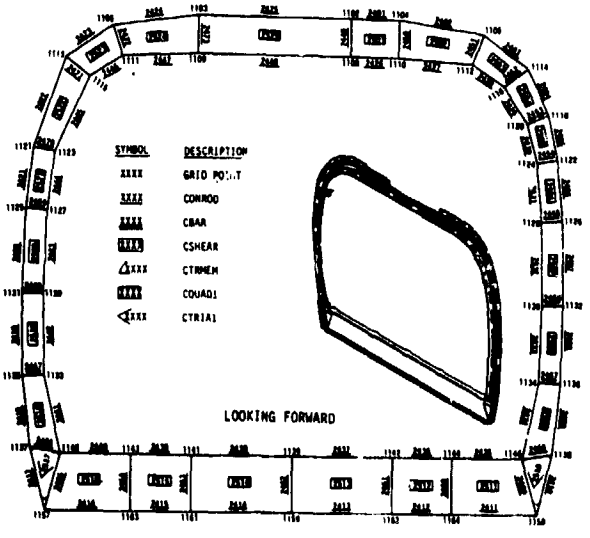

Figure 12. Static Modeling of Sta. 200 Frame

The caps carried axial load only and were represented by CONROD's. Average cap area was used between nodes where the cap was tapered. Cap areas were reduced for fastener holes, and local cap notches were ignored. No portions of adjacent skin or effective areas of webs were lumped with the caps. Webs carried only shear and were modeled with CSHEAR's. Web holes and stiffeners were ignored.

ORIGINAL PAGE IS
OF POOR QUALITY

The model for the forward pylon upper buttline beams is shown in Figure 13.

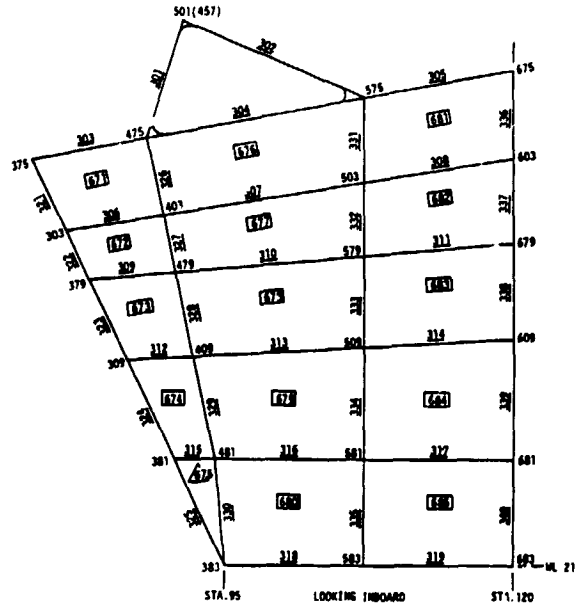

SYMBOL	DESCRIPTION
XXXX	GRID POINT
XXXX	CONROD
XXXX	CBAR
XXXX	CSHEAR
XXXX	CTRMEM

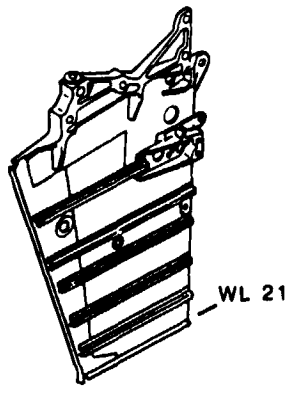

Figure 13. Static Modeling of Forward Pylon Upper Butt-Line Beam

The transmission support fitting at the top of the beam was designed to act as a truss and is modeled with axial CONROD's. Otherwise the model was like a frame in that caps were represented by CONROD's and webs by CSHEAR's. Stiffeners used only for web stability were not all modeled (some were to break up panel sizes).

Longerons, stringers and side skins were modeled as in Figure 14. Longerons were modeled as CONROD's using their actual areas. Stringers, because there are 36 of them on the cross-section, were lumped into 13 effective stringers (or lumped with longerons) to limit the size of the model. Skin panels were represented by CSHEAR's.

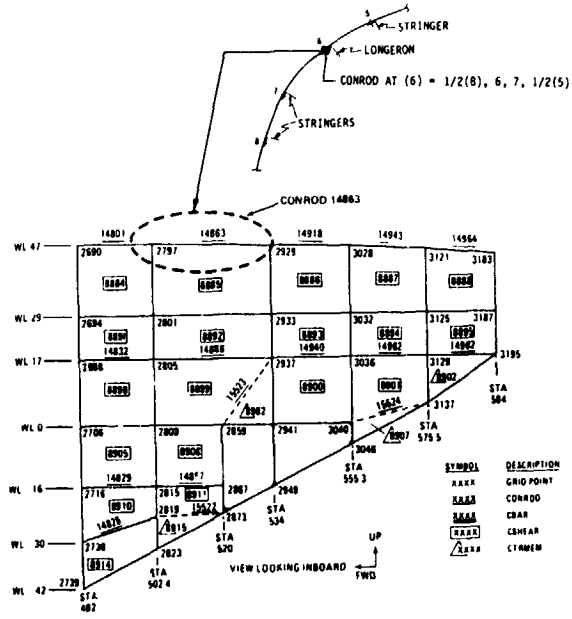

Figure 14. Static Modeling of Stringers, Longerons, and Side Skins

Modeling of effective skin near longerons and stringers as an addition to their area was one of a number of instances where the guides were violated for cause. The logic was originally that the static (stress) model would recognize buckled skins occurring under design maneuver loads. Then with this buckled skin model, internal load distributions would be obtained for detailed stressing of the elements. Locally effective areas of skin were to have been added to stringer areas for potentially improved accuracy.

For the vibration model, the airframe was to have been treated as in 1g level flight without maneuver induced buckling. The original guide was written to remove the locally effective skin area from the stringers for the vibration model where the skins were to be fully effective.

It was realized when the actual modeling was underway, that the labor of adding and then removing these small delta areas was not worthwhile. The static model internal load distributions would not really be affected by these small delta areas. This change was the most significant of the deviations made from the planned guides.

A demonstration run was made with the static model to determine whether the model generated reasonable (error free) results. Internal loads were calculated for a 3 g pull-up at a gross weight of 50000 pounds. Element forces, grid point displacements, and grid point force balances were examined. The static deflection plot for selected grid points illustrated in Figure 15 indicates apparently rational results.

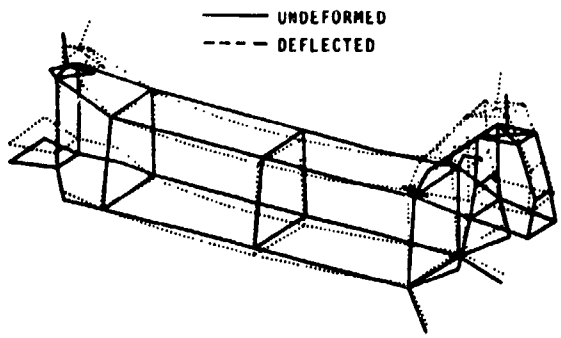

Figure 15. Static Demonstration Case, Deflections for 3.0 G Pull-Up

Next, the model had to undergo certain modifications from a static to a vibration model. One of these changes was the drag strut of the engine mount. The drag strut, Figure 16, is slotted and only acts under extreme maneuver and crash loads. It was included in the static model, but was removed from the vibration model. The inactive strut has a vibration purpose; it prevents the drag strut from adding a yaw stiffness increment which would have placed the engine yaw natural frequency on 3/rev. Further, since the forward yoke support fitting is significant in forming the stiffness of the engine mounting, this yoke was remodeled to provide better detail. Cap areas of the forging were modeled with CBAR's and the webs with CQUAD2 shell elements.

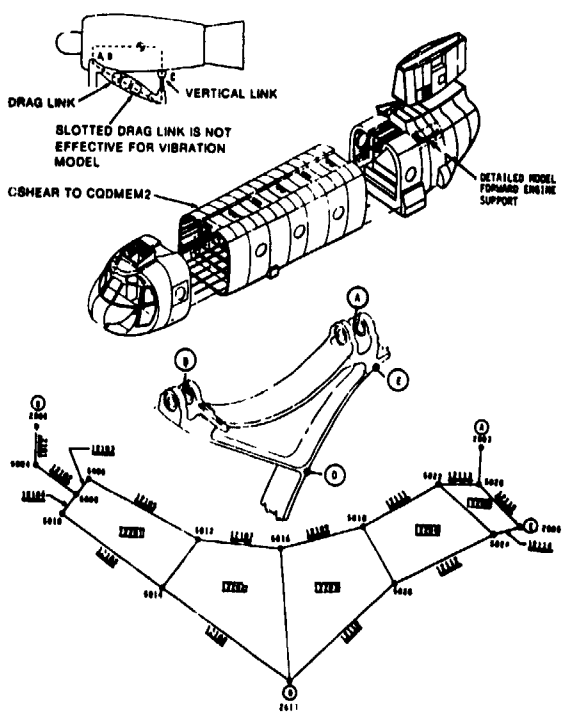

Figure 16. Vibration Modeling Structural Changes

The most important change to form the vibration model was the change of airframe skin from CSHEAR's to CQDMEM2 elements. The latter are membranes which provide both the skin shear capability and are effective in adding bending area. The change is associated with the buckled versus unbuckled skin configurations of the static and vibration models discussed previously.

Concentrated weights of the engines, transmissions, and APU were initially distributed to the attachment points in the static model while preserving the mass and inertia of the overall aircraft. For the vibration model, center of gravity grid points were introduced at the engines and transmissions and appropriate inertias used.

A demonstration run was performed with the vibration model. It was done in the free-free condition to represent an inflight situation. Emphasis was placed on the basic airframe structure by modeling an empty aircraft without fuel. This avoided the need for dealing with the nonlinear cargo and fuel isolation systems. The demonstration run included the calculation of natural frequencies and modes and forced response. Results of the natural frequency calculation are summarized in Table 1. Based on previous CH-47 modeling and test experience, these results were judged to be reasonable. The modeling process was reported in Ref. 3.

Table 1. Vibration Demonstration Case, Airframe Natural Modes

MODE NO.	FREQUENCY (HZ)	DESCRIPTION
1	6.36	1ST LATERAL - AFT PYLON LATERAL
2	7.24	ENGINE LATERAL YAW - OUT OF PHASE
3	7.52	1ST VERTICAL - AFT PYLON LONGITUDINAL
4	8.24	ENGINE LATERAL YAW - IN PHASE
5	11.89	2ND VERTICAL - PYLON LONGITUDINAL IN PHASE
6	12.89	2ND LATERAL - FWD PYLON LATERAL
7	13.81	3RD LATERAL - PYLON LATERAL IN PHASE
8	16.01	AFT LANDING GEAR LATERAL - OUT OF PHASE
9	16.22	UNDEFINED VERTICAL
10	17.41	UNDEFINED LATERAL
11	19.20	UNDEFINED LATERAL
12	20.71	UNDEFINED VERTICAL
13	21.61	UNDEFINED VERTICAL
14	22.92	UNDEFINED COUPLED VERTICAL-LATERAL
15	24.79	UNDEFINED COUPLED VERTICAL-LATERAL

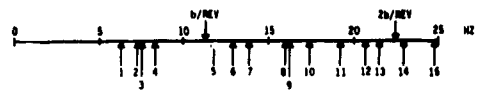

Time and Cost

A key question has long been, can an FEM be assembled and used in time to influence the design of a new helicopter airframe?

This was estimated in great detail, as illustrated in Figure 17, and it appears that an initial vibration result can be obtained in 6 months from Contract Award. This is certainly timely, because primary structure releases are not completed until the 15th month.

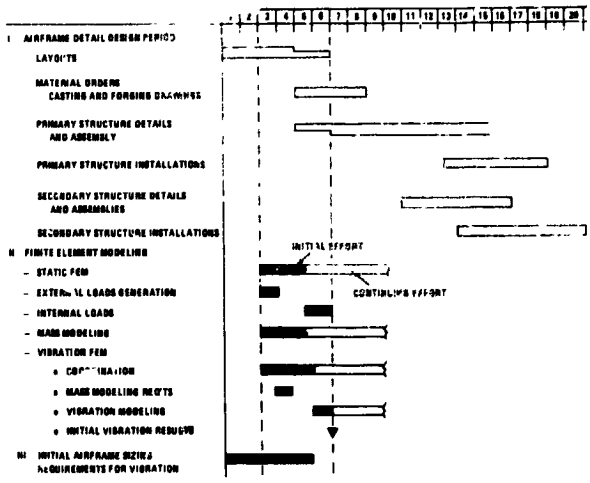

Figure 17. Vibration Modeling Schedule for a New Helicopter Program

The cost of the modeling is 4430 manhours or 5% of a typical 85000 manhour airframe design effort. Of this 5%, 4% is for the static model - an activity that is becoming routine by Stress, and only 1% more to obtain the first vibration model results. Beyond this point vibration iterations of the design will add to the cost, but will certainly be cost effective if it provides a well tuned fuselage prior to manufacture.

Test Plan

In addition to flight vibration measurements, two categories of ground tests can be identified as a means of evaluating a finite element model of a helicopter airframe for vibration analysis; namely, static deflection tests and shake tests. The ground test approaches have two significant advantages: (1) the rotor is removed which is a great simplification, and (2) all applied forces can be measured and controlled.

Static deflection tests seem attractive because: (1) Inertia effects are eliminated allowing independent evaluation of stiffness. (2) To some extent, selected parts of the airframe can be loaded facilitating identification of model deficiencies. On the negative side, industry experience with complete airframe deflection tests is extremely limited. Finally, it is noted that correlation with a shake test directly addresses the proposed application.

Deflection Test

The objective of the deflection test was to verify the stiffness modeling performed analytically. The approach was to obtain detailed deflection data under loading conditions which exercised all major structural elements of the airframe. These included bending, torsion and frame racking of the constant section, pylon bending, and pylon to constant section load path.

The proposed deflection test loadings of Figure 18 were designed accordingly.

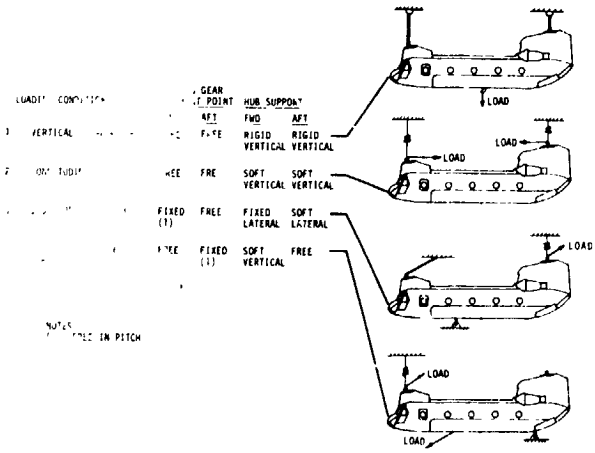

Figure 18. Summary of Deflection Test Load Conditions

While the deflection test was deemed to be very desirable, it was not performed because of cost limitations.

Shake Test

The objective of the shake test was to verify the NASTRAN finite element vibration model. The approach was to obtain detailed frequency response and mode shapes under conditions which exercised all elements of the model. These included excitation at both forward and aft hubs using all flight hub forces and moments except torque and covering the frequency range from 5 to 35 Hz (9/rev is 33 Hz).

The planned method of excitation was to suspend electrodynamic shakers and the aircraft from a shake test gantry, Figure 19.

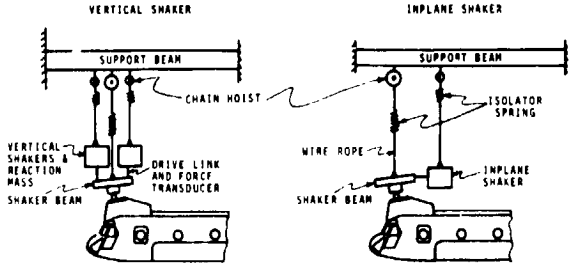

Figure 19. Shake Test Method of Excitation

Dual vertical shakers operating in a master/slave mode are driven in or out of phase to provide either vertical, pitch or roll excitation. In the vertical direction, the soft suspension of both the aircraft and shaker isolates the shaker from the aircraft except through the drive link. In the horizontal plane, isolation of the shaker is provided by the low frequency pendulum modes of the aircraft and shaker on the suspension cables.

ORIGINAL PAGE IS
OF POOR QUALITY

Airframe accelerometer locations are shown in Figure 20.

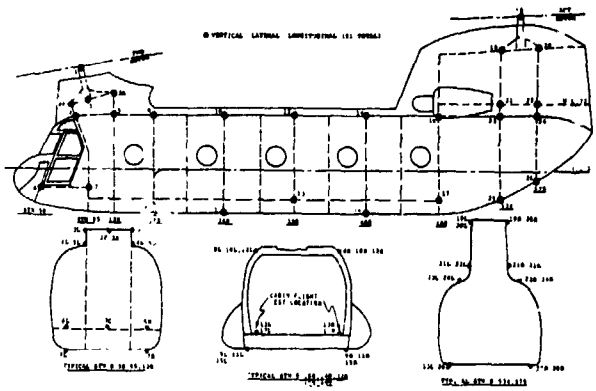

Figure 20. Shake Test Airframe Measurement Locations

Figure 21. CH-47D Test Specimen in Shake Test Support Fixture

Response measurements were to be obtained at 51 locations in three axes. Locations correspond to node points of the NASTRAN vibration model.

Pretest NASTRAN forced analysis results were to be compared with the shake test results. The primary criteria for correlation was intended to be the forced response plots. Secondary criteria would be the mode shapes at the natural frequencies.

Industry Critique of Test Plan

As with the modeling plan, an industry review of the Ref. 2 test plan took place. With regard to the desirability of the deflection test, one considered the cost to outweigh the benefit. Two pointed out that modal parameters including damping should not be neglected. Two noted that the selection of hub mass effect is an important aspect of the test. And two reminded us that rotor shaft and drive system free play may have a significant impact on results.

Ground Shake Test and Correlation

The test specimen was the second prototype of the YCH-47D helicopter, Figure 21.

As per the test plan, the aircraft was suspended at the rotor heads in a large structural steel fixture which also supported the rotor head shakers. A low frequency suspension, all less than 2. Hz, was employed for both the aircraft and shakers. Three linear vibratory forces and two moments were applied at each rotor head. Selection of force levels was based on practical considerations including sufficient magnitude of response, shaker stroke limits and stable behavior of the suspended shakers. Results were obtained in the form of transfer function plots and mode shapes for each excitation, Figure 22.

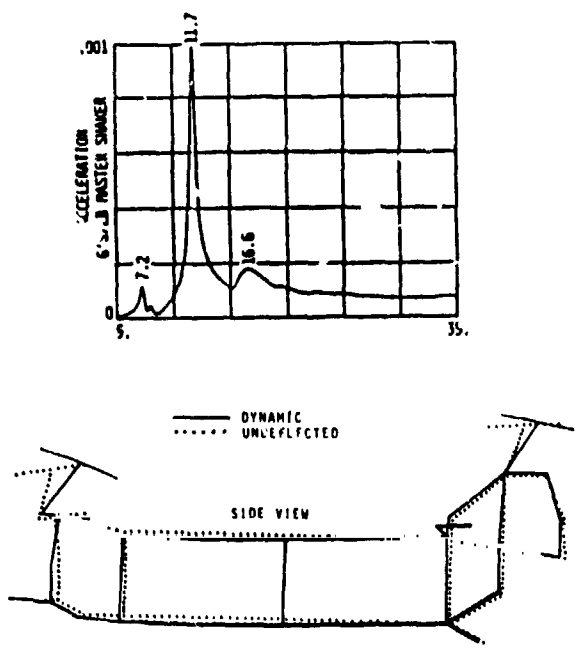

Figure 22. Format of Typical Shake Test Results

For each excitation an extensive matrix of forced response plots was obtained. Figure 23 is an example.

A summary of the test natural frequencies developed from the matrix of response peaks is presented in the Figure 24 bar chart. The shaker excitation which provided the best excitation is noted.

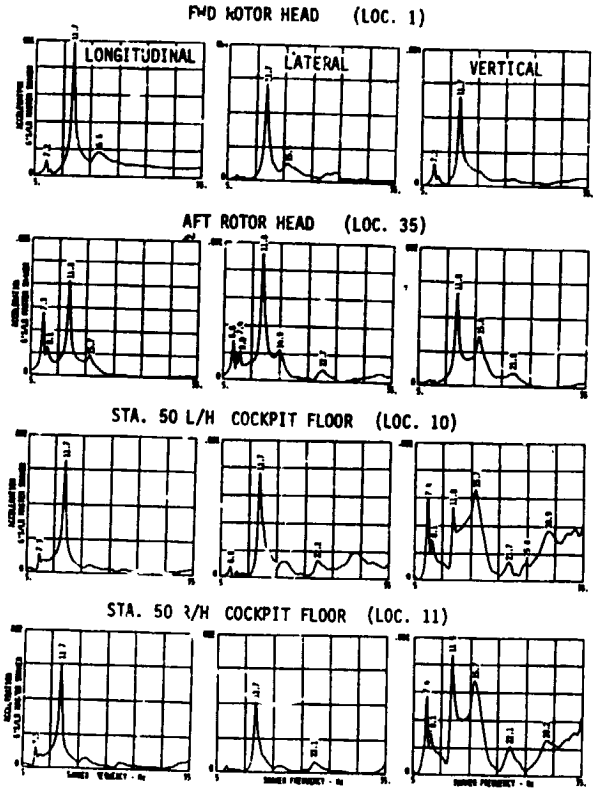

Figure 23. Frequency Response Summary for Forward Longitudinal Excitation

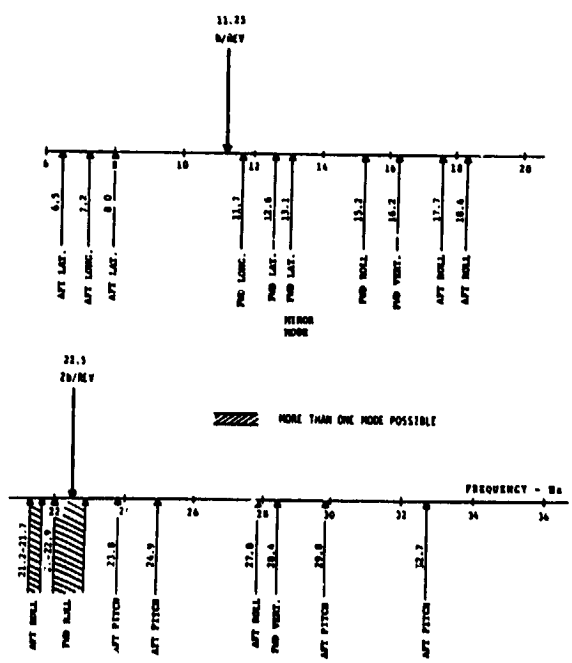

Figure 24. Summary of Test Natural Frequencies

From location to location, considerable scatter was sometimes evident in the frequency at which a given mode appeared. This made it difficult to precisely define the natural frequencies. Observed nonlinear behavior with force level is believed to be at least partially responsible for the scatter in the peak frequencies. In the bar chart of Figure 24, the frequency with the largest response was favored.

Forced mode shapes for the two vertical and two lateral modes closest to 3/rev are displayed in Figures 25 through 28. All of the shapes represent the total forced response normalized by the maximum deflection. The first response shape at 11.7 Hz (Figure 25) is dominated by the longitudinal pitch motion of the forward pylon with a smaller in-phase motion of the aft hub. Motions of the two hubs are balanced by an essentially rigid body motion of the remainder of the aircraft.

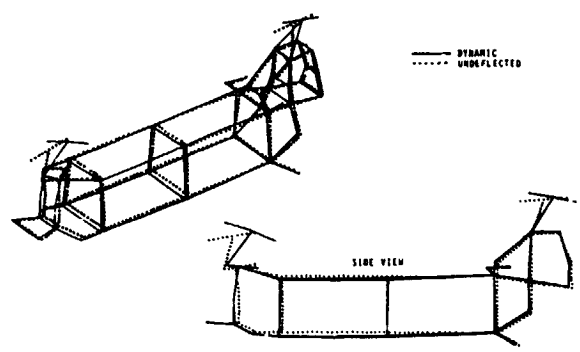

Figure 25. Forced Mode Shape at 11.7 Hz with Forward Hub Longitudinal Excitation

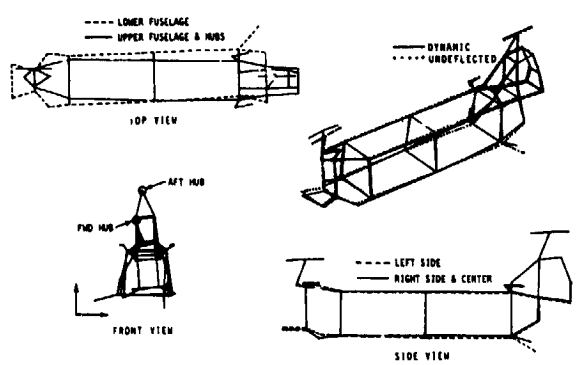

Figure 26. Forced Mode Shape at 12.6 Hz with Forward Hub Lateral Excitation

The characteristic of the 12.6 Hz mode, Figure 26, is essentially that of a classical second torsion mode. A relatively large lateral/roll motion of the forward pylon is accompanied by a small in-phase motion of the aft pylon. The pylon motions are opposed by a differential lateral motion of the upper and lower cabin structure. A large lateral motion of the aft landing gear also contributes to the inertial balance.

Like the previous mode at 12.6 Hz, the response at 15.2 Hz, Figure 27, is also basically a second torsion mode. In this case, however, the in-phase hub motions are opposed by what more nearly resembles a twisting motion of the cabin, as indicated by differential motion from left to right as well as top to bottom. Note also that the phase of the aft landing gear is reversed in the mode.

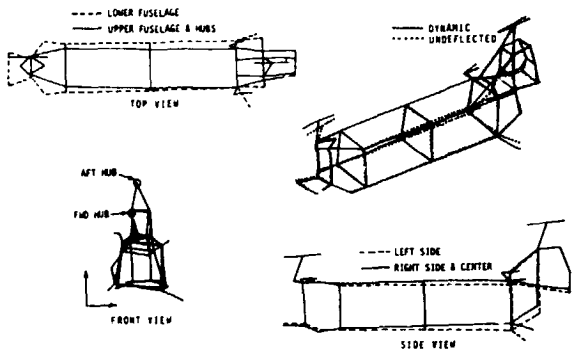

Figure 27. Forced Mode Shape at 15.2 Hz with Forward Hub Lateral Excitation

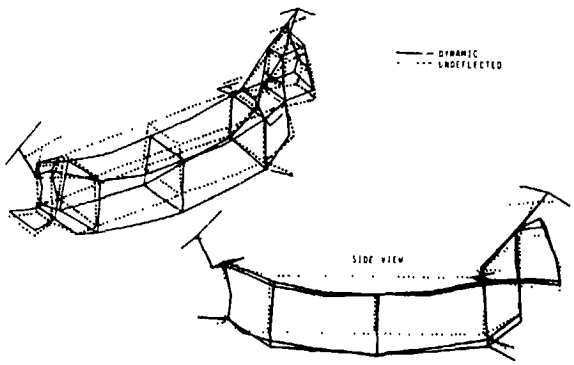

Figure 28. Forced Mode Shape at 16.2 Hz with Forward Hub Vertical Excitation

At 16.2 Hz, Figure 28, the response shape displayed is the fundamental vertical bending mode of the cabin section. Bending motion of the cabin is opposed by large out-of-phase pitch motions of the pylons.

NASTRAN Analysis of Test Configuration

The basic airframe vibration FEM initially demonstrated in the free-free condition was modified to the test configuration. Changes to the basic airframe model included incorporation of the test hub fixtures (hub weight and shaker beam assembly) and adjustments to the mass distribution to account for equipment not installed.

The total NASTRAN model incorporated several unique features. A persistent issue with regard to analytical correlation of test and analysis has been the question of the suspension system and shaker effects. Consequently, the total model was fully representative of the test configuration including the support fixture, the shakers and the aircraft and shaker suspension systems in addition to the basic airframe model. A differential stiffness correction was also developed and applied to the stiffness matrix to include gravitational effects (pendulum modes) on the suspended aircraft.

Shaker and Support System Modeling

Modeling of a typical shaker configuration is illustrated in the schematic of Figure 29. The shaker stator mass and a portion of the cradle assembly mass are located at the shaker pivot point (grid 7011). The remaining cradle assembly weight is located at the cradle suspension point (grid 7012). The armature flexures (armature spring) connect the stator and the coincident armature mass. Motion of the armature mass is constrained to act along the axis of the drive rod. The drive rod, represented by a CONROD, is assumed to carry only axial loads due to the flexures oriented at 90°.

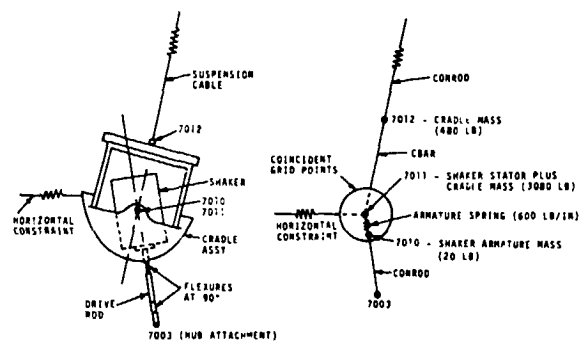

Figure 29. Typical Shaker and Suspension Modeling

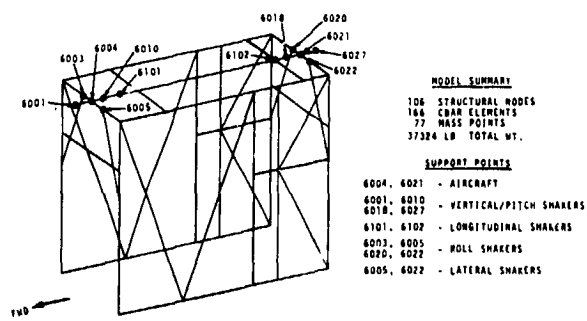

Figure 30. Support Fixture NASTRAN Model

The NASTRAN model of the shake test support fixture which weighs approximately 37,324 pounds is shown in Figure 30. Grid points corresponding to the aircraft and shaker support points are identified. Typical modeling of the hub and shaker suspension which is the interface between the support fixture and the basic airframe is illustrated in Figure 31.

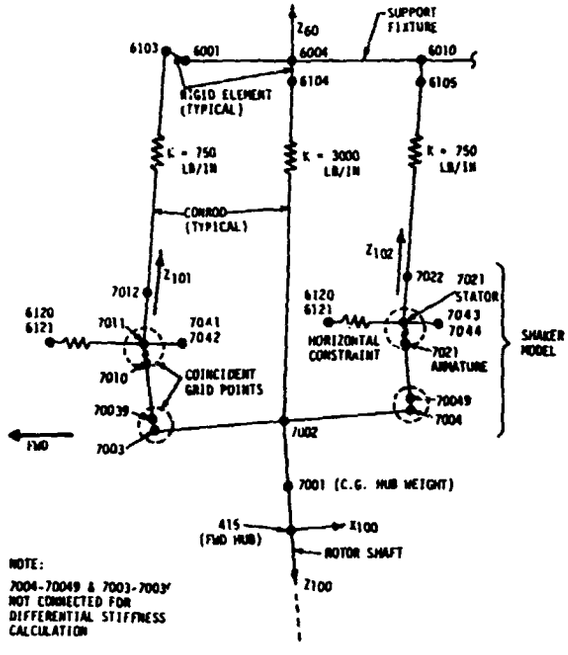

Figure 31. Forward Hub Suspension Modeling for Vertical/Pitch Excitation

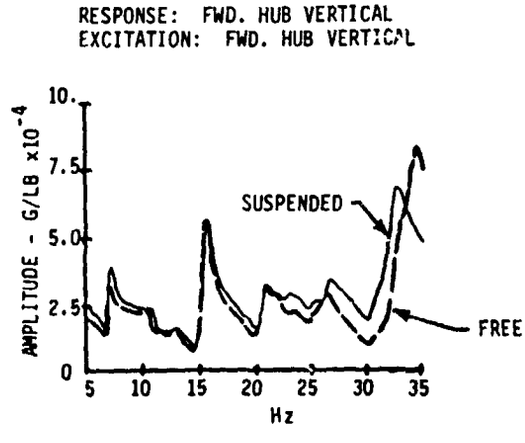

Figure 32. Typical Analytical Response for Free and Suspended Conditions

With regard to the question of the suspension system and shaker effects, the support fixture is always likely to have modes in the test range. The question, therefore, can only be resolved by a comparison of analytical aircraft responses for the free and suspended conditions. Typical results illustrated in Figure 32 show only minor effects with the most significant changes in the 30 to 35 Hz range. While these results are applicable only to the test equipment used in this program, they generally support the accepted suspension concept. Physically, frequency shifts and amplitude variations may result from any of the following or combination of the following:

- Coupling with shaker system
- Minor coupling with the support fixture
- Prestiffening of the airframe due to gravity preload.
- Other coupling mechanisms in the airframe due to gravity preload.

Also, it should be remarked that the theoretical appropriateness of representing pendulum modes by a differential stiffness correction, while plausible, has not been thoroughly explored.

Correlation of Test and Analysis

Conventional correlation of test and analysis for airframe vibration is a comparison of natural frequencies and modes first, and forced vibration second. In this program the criteria order was reversed; more emphasis was placed on the ability of the analysis to predict reasonable forced amplitudes throughout the airframe. Natural modes were in second place, although it is recognized that specific forced peaks and valleys follow natural frequency placement. If able to predict reasonable forced amplitudes from individual rotor forces, then the analysis would be a reasonable tool for predicting vibration arising from actual mixed forces and directions.

To keep the correlation process within reasonable bounds, forced vibration results were presented at only four representative and widely separated locations, Figure 33, each in the vertical, lateral and longitudinal directions. The forces for illustration were the forward rotor vertical, pitch and lateral excitations. A single structural damping value of 2.5% critical was assumed.

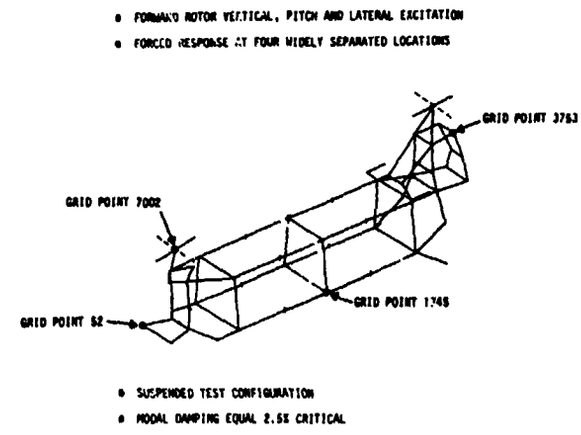

Figure 33. Airframe Locations and Conditions for Forced Response Correlation

Forced response comparisons with forward vertical excitation are presented in Figure 34; with forward pitch excitation in Figure 35; and with forward lateral excitation in Figure 36. The response scale is in ±g per pound of force.

Vertical vibration prediction from forward rotor vertical excitation in Figure 34 shows fairly good absolute magnitude correlation with test at the important 3/rev and 6/rev forcing frequencies There is generally an analytical response which can be associated with the major test peaks and usually the minor ones as well. In the coupled direction, i.e. longitudinal motion under vertical excitation, the absolute magnitudes, which are usually smaller than in the prime directions, are reasonably well produced.

On the negative side, the very prominent cockpit Sta 52 test response at 28 Hz in the vertical direction has no strong analytical counterpart.

Results of the forward rotor pitch excitation are in Figure 35. Comparison of test and analysis here gives generally good agreement. Again absolute magnitude predictions are good, especially at 3/rev and 6/rev. Longitudinal motion at the forward hub shows the strong peak near 10 Hz that is close to the test peak. Even the secondary peak near 17 Hz is reproduced. Vertical motion from pitch excitation is acceptable on an absolute basis at 3/rev and 6/rev, but the magnitudes of the peaks disagree.

The analytical peak at 32.7 Hz is generally over-predicted in amplitude. This implies that the proper choice of damping, rather than the constant 2.5% structural critical damping assumed, would improve the correlations.

Results of the forward rotor lateral excitation are in Figure 36. Again, the absolute magnitudes are reasonable. On the negative side, the lateral peak near 21 Hz is over predicted. Again the use of non-constant structural damping would improve this situation.

Figure 37 is a bar chart comparing analytical and test frequencies. In the cluster of modes from 6 to 8 Hz, there is one more analytical than test mode. Since this analytical mode is an out-of-phase engine to engine yaw motion, it may exist but be masked within the adjacent aircraft longitudinal mode at 7.2 Hz. In the cluster of modes from 10 to 20 Hz, there is an analytical mode corresponding to every test mode. The frequency error ranges from near zero to 0.8 Hz for the test mode at 11.7 Hz. Above 20 Hz there are more analytical than test modes.

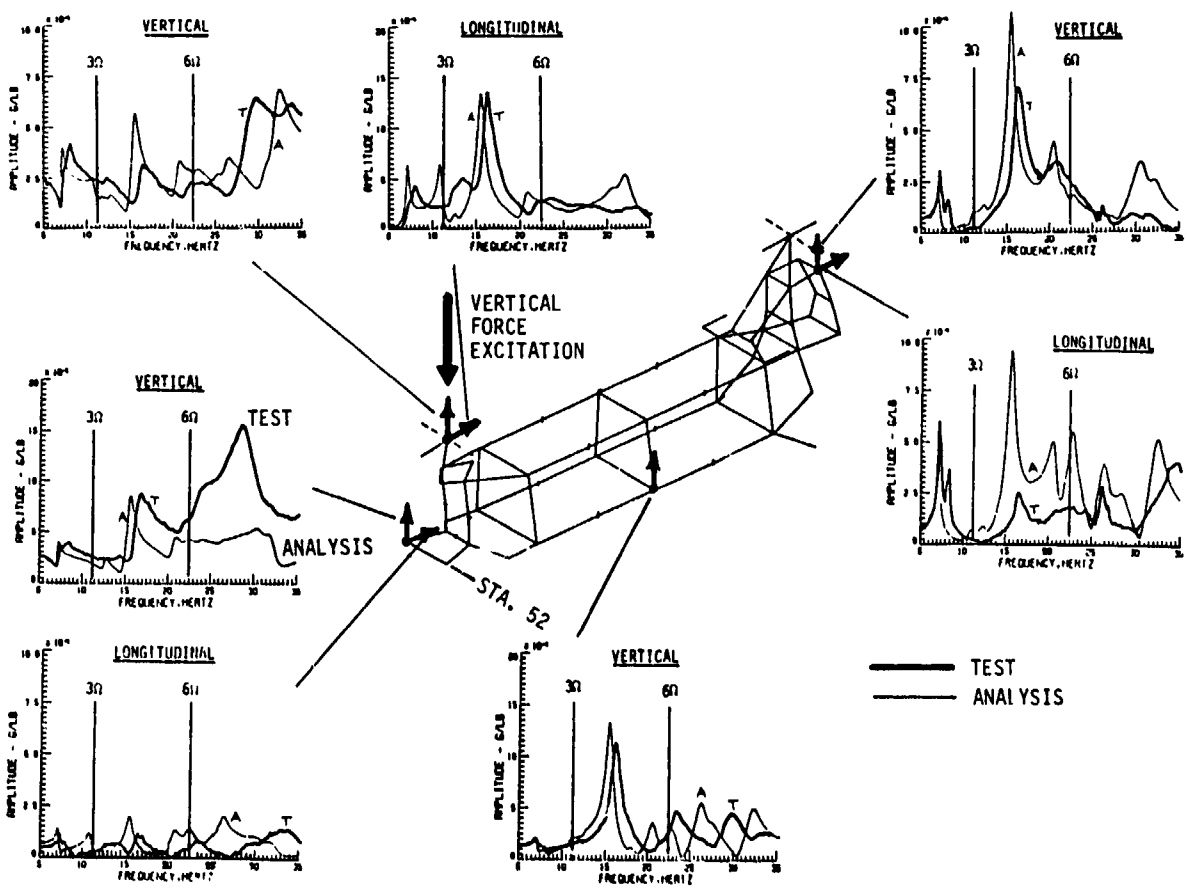

Figure 34. Comparison of Test and Analytical Forced Response with Forward Vertical Excitation

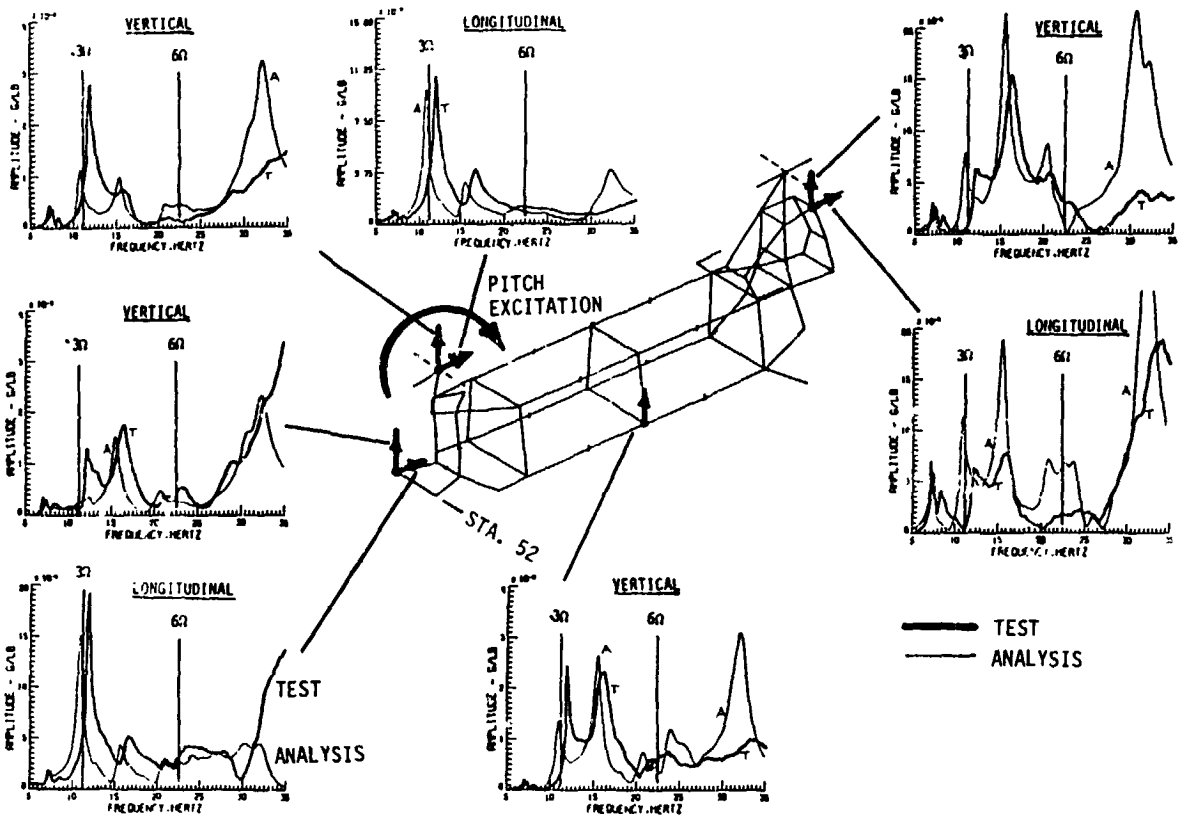

Figure 35. Comparison of Test and Analytical Forced Response with Forward Pitch Excitation

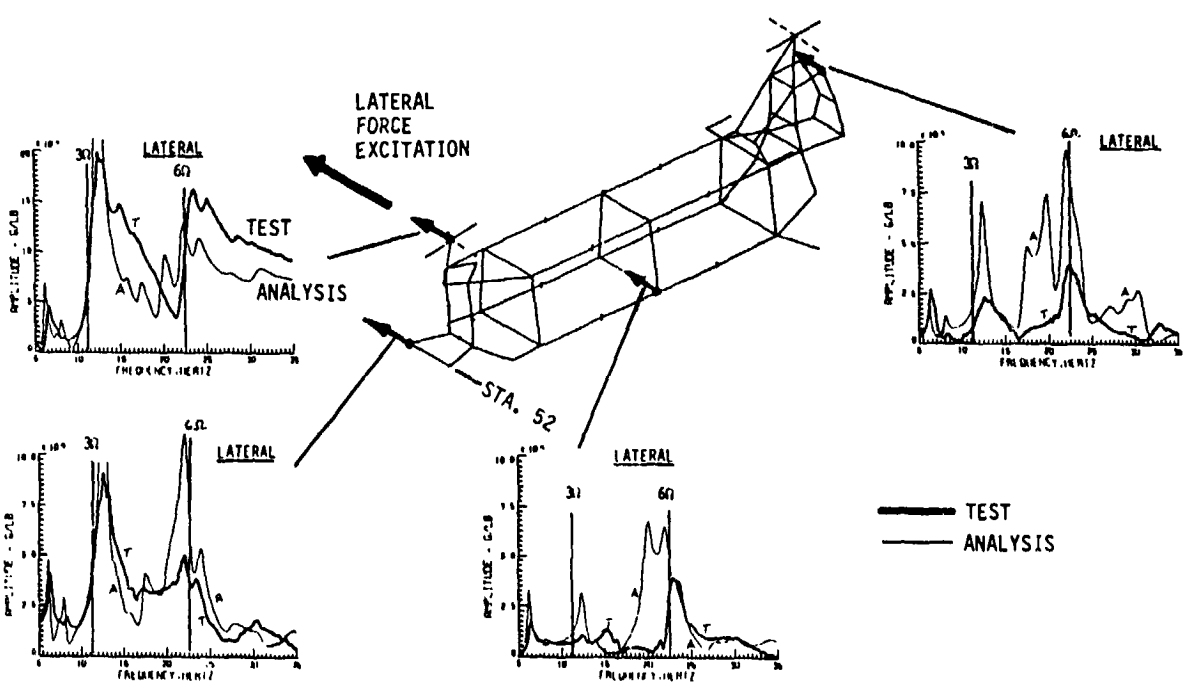

Figure 36. Comparison of Test and Analytical Forced Response with Forward Lateral Excitation

ORIGINAL PAGE IS
OF POOR QUALITY

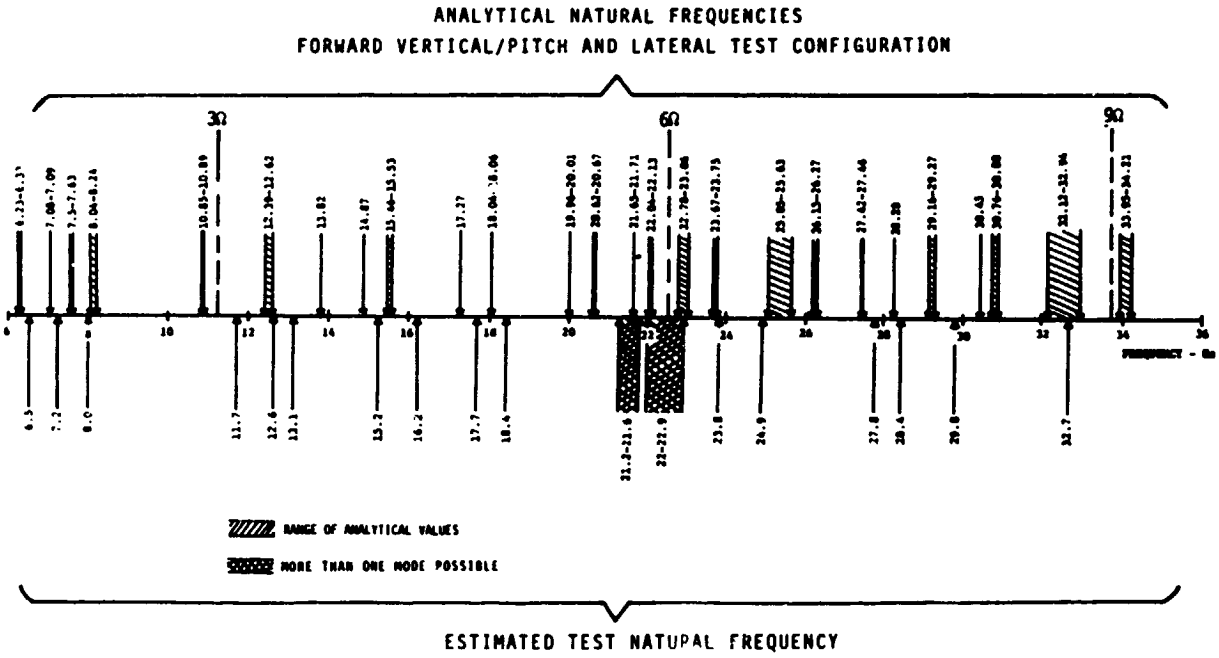

Figure 37. Comparison of Test and Analytical Natural Frequencies

Correlation Improvements

A number of items arose from the modeling and correlation experience which have the potential for further improvement of correlation.

1. Correct modeling of damping is a major need. The current use of a constant assumed value of structural damping is not adequate. Some form of nonuniformly distributed damping is required.

2. Stringer area is not included in shear area of the cross-section, since the usual assumption of skin areas carrying all shears is made. When summed the shear area of stringers is as much as 50% of the skin area.

3. The upper portion of the splice joints is in compression under 1g loading and unconnected stringers may be axially effective.

4. More thorough modeling of the forward transmission cover, shaft, bearings and bearing clearances may be necessary to obtain a still closer match of the mode near 3/rev.

5. The hub test fixture should be remodeled to better reflect elastic effects at the interface with the rotor shaft

6. Masses are distributed to approximately 10% of the structural grid points. A finer mesh may be necessary to improve higher mode predictions.

A preliminary effort to evaluate some of these improvements has been conducted. In Figure 38, damping has been adjusted in an attempt to improve the forced response correlation. Instead of using a constant 2.5% structural damping, the damping has been varied by mode as indicated in the tabulation.

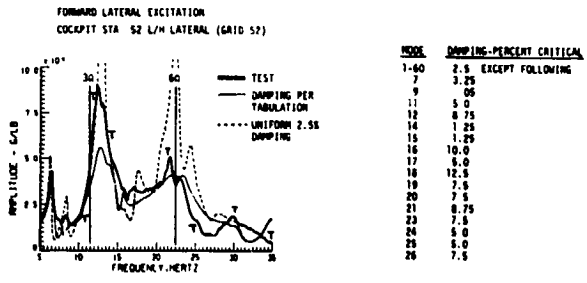

Figure 38. Effect of Modal Damping on Forced Response Correlation

The damping was varied here to obtain the best match at the bottom of the response, away from the resonance points.

A second improvement item has been explored. Table 2 summarizes the results of a number of exploratory runs to investigate the effect of splice joint continuity and stringer shear area. For

ORIGINAL PAGE IS OF POOR QUALITY

Table 2. Effect of Splice Joint Continuity and Stringer Shear Area on Natural Frequency

ANALYTICAL FREQUENCIES ~Hz

SPLICE JOINT CONFIGURATION →	BASELINE MODEL	STA. 160 AND 440 ALL STRINGERS CONTINUOUS				STA. 160 CONTINUOUS
SHEAR MODULUS →	BASELINE	BASELINE	X1.13	X1.5	X2.0	X1.13
	6.25	6.26	6.40	6.73	7.00	6.40
	7.00	7.11	7.18	7.40	7.64	7.18
	7.91	7.92	8.00	8.19	8.37	8.00
	8.48	8.49	8.59	8.82	9.07	8.59
TEST VALUE = 11.7 Hz →	10.85	11.31	11.42	11.68	11.97	11.42
	12.62	12.63	13.00	13.04	14.68	13.00
	13.81	13.89	14.28	15.15	16.07	14.28
	14.87	14.88	15.69	16.42	17.05	15.69
	15.47	15.59	15.84	17.74	19.16	15.84
	17.30	17.34	17.70	18.60	19.81	17.70
	18.09	18.11	18.44	19.25	20.72	18.44
	20.01	20.02	20.36	21.12	21.43	20.36
	20.64	20.78	21.00	21.29	22.00	21.00
	21.69	21.74	22.00	22.96	24.23	22.00
	22.10	22.17	22.81	24.32	25.92	22.81
	23.41	23.52	23.91	24.98	26.30	23.91
	23.99	24.09	24.61	26.03	27.35	24.61
	25.30	25.38	25.93	27.35	28.83	25.94
	26.12	26.29	26.81	27.81	28.96	26.81
	27.42	27.46	27.78	28.85	30.47	27.77
	28.41	28.46	29.16	31.07	33.27	29.16
	29.30	29.33	30.02	31.72	33.61	30.02

expediency, the stringer shear area was simulated by modifying the shear modulus so as to effectively increase the shear area. The thrust of the effort was to raise the baseline analytical frequency at 10.85 Hz to the test value at 11.7 Hz. The chart shows that with all the stringers continuous at Stations 160 and 440, the frequency did increase from 10.85 to 11.31 Hz. This change in splice joint continuity has remarkably little effect on the frequency of the remaining modes.

Next, to represent the actual stringer shear area, the shear modulus is increased by a factor of 1.5, the frequency of this mode increased to 11.68 Hz, almost exactly the 11.7 Hz test value.

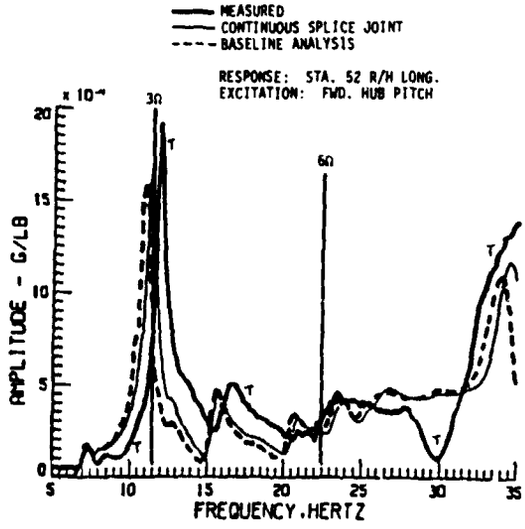

Figure 39. Effect of Splice Joint Continuity on Forced Response Correlation

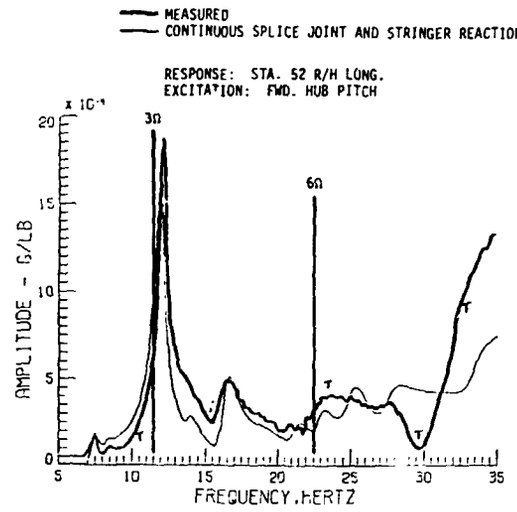

Figure 40. Combined Effect of Splice Joint Continuity and Stringer Shear Reaction

Forced response runs were then made with these two improvements. As representative, look at cockpit longitudinal response under forward rotor pitching moment excitation shown in Figures 39 and 40.

The inclusion of these two, somewhat secondary effects, thus have an impressive effect on improvement of the correlation.

Industry Critique of Test and Correlation

Rather than a series of on site briefings, the presentation and critique of the test and correlation activity was made at a joint meeting of industry representatives. The analytical approach of modeling the shakers and support systems in addition to the basic airframe received favorable comments from all attendees. Reasons cited included: (1) verification of normally accepted suspension concept, (2) insured one-to-one comparison, and (3) directly addressed interaction issue. Overall, the correlation below 20 Hz was deemed good. However, the consensus of opinion was that the higher frequency range needed more work. A finer mass breakdown was considered to be a key aspect in improving high frequency correlation.

Several comments unrelated to specific test results are also worthy of mention. One observer suggested that study of the available results might provide guidelines for a realistic validation criteria. A second noted that a stronger management commitment to adequate shake testing and correlation was needed.

Ref. 4 reported the details of the ground shake test and the correlation effort. Ref. 5 is an overall program summary.

Conclusions

- Guides prepared during the planning phase enabled proper planning, scheduling and control of the present modeling effort.
- Error free demonstration runs for the resulting static and vibrations models displayed rational internal loads and reasonable natural frequencies and mode shapes.
- Management enforced cooperation of Design-Stress-Weights-Dynamics is key to achieving an FEM suitable for internal loads, structural member sizing and vibration analysis.
- Cost of the total effort is 4,430 man-hours or 5%, 4% is already usual for internal loads; the vibration model is another 1%.
- Satisfactory procedures were developed for analysis of the suspended aircraft. Comparison of free and suspended configuration indicates only minor differences.
- Reasonable correlation was obtained between test and analytical results. Adequate modeling of damping appears as a major stumbling block to improved correlation.
- Nonlinear effects result in test scatter of peak responses about the natural frequencies. Force level was identified as one source of nonlinearity.
- Significantly improved correlation appears possible by including secondary effects such as stringer shear area and effective splice joint stringer continuity due to lg loading.

Acknowledgment

This work was sponsored by NASA Langley under Contract NAS1-16460. The authors wish to acknowledge the contributions of NASA Langley participants in this program. Technical guidance was provided by Messrs. Eugene C. Naumann and Raymond G. Kvaternik. The program was conceived and supervised by Mr. William C. Walton, Jr. The YCH-47D prototype aircraft was provided to NASA for the test period by the U.S. Army AVSCOM, St. Louis.

References

1. Gabel, R., Ricks, R. G., and Magiso, H., "Planning, Creating and Documenting a NASTRAN Finite Element Vibrations Model of a Modern Helicopter, Planning Report," NASA CR165722, April 1981.
2. Gabel, R., Reed, D. A. "Planning, Creating, and Documenting a NASTRAN Finite Element Vibrations Model of a Modern Helicopter, Test Requirements Report," NASA CR165855, April 1982.
3. Gabel, R., Kesack, W.J. and Reed, D. A., "Planning, Creating and Documenting a NASTRAN Finite Element Vibrations Model of a Modern Helicopter, Modeling Documentation Report," NASA CR166077, March 1983.
4. Gabel, R., Reed, D. A., Ricks, R.G., "Planning, Creating and Documenting a NASTRAN Finite Element Vibrations Model of a Modern Helicopter, Ground Shake Results and Correlation Report," NASA CR166107, May 1983.
5. Gabel, R., Kesack, W. J., Reed, D. A., Ricks, R. G., "Planning, Creating and Documenting a NASTRAN Finite Element Model of a Modern Helicopter, Summary Report," NASA CR17229, October 1983.

DISCUSSION
Paper No. 20

PLANNING, CREATING AND DOCUMENTATING A NASTRAN FINITE ELEMENT MODEL OF A MODERN HELICOPTER

R. Gabel
D. Reeo
R. Ricks
and
W. Kesack

Charlie Fredrickson, Sikorsky Aircraft: Dick, I think that was a really neat paper, well thought out, and very nicely presented and so on. I'd like to ask you three questions. Did you previously do a NASTRAN model on the Chinook, in other words had you previously taken an earlier FEM model on the Chinook and upgraded it to the D before it actually flew and if you did, how did that compare with this well-planned FEM model that you did later on?

Gabel: Well, we did do that, Charlie, many, many years ago for the A model of the Chinook. There was a model built and there was even hardware made to try to tune it and the fact that the Chinooks had vibration troubles through their whole life means that it didn't work very well.

Fredrickson: I was trying to find out if you had upgraded that model for the D.

Gabel: No, we were too stupid to do that. We actually started from scratch and used the design drawings for the D. Since many of the people who did the early model were long gone anyway, it didn't really matter.

Fredrickson: In the actual shake test, how did you actually identify what you considered to be natural modes of the aircraft?

Gabel: Combinations of things: we used the peak, the forced amplitude, we used the 90° phase between the amplitudes and the shaker force, we used the frequency circle diagrams--about 3 or 4 different ways.

Fredrickson: Okay. I know in my own experience, if you use one or another method and don't use kind of a combination, you're liable to miss a few modes along the way.

Gabel: But then they're not pure because we were shaking with one shaker at a time at one rotor head and to get a pure mode you have to have distributed shakers which nobody does any more.

Fredrickson: Another question about how the shake test was done. Was that a swept sine or random input or just exactly what was the methodology behind the shake test itself?

Gabel: It was a slow sweeping sine.

Wayne Johnson, NASA Ames Research Center: With the coming switch to composite airframes, do you think that's going to make this job harder or easier?

Gabel: Different. So far the elements being used are really the same as the stress people have been using for the metal elements. They are not going into it layer by layer because of the magnitude of the structure.

Johnson: Do you think the composite structures will have more or less small scale variations? It seemed that one of the things you were saying is that small scale variations which are not modeled are almost certainly a cause of some of the discrepancies. Do you think composites will have more or less of that?

Gabel: It's hard to say. I would think they might have more because the way they're laid up--it's not quite the same as a rolled out metal sheet. There may be variations in thickness and such things that may be more complex. I might comment that Langley is underway on a continuation of this program, where Sikorsky, Hughes, and Bell are analyzing their production metal aircraft. Since we have already done the first metal one, we're underway on the first composite aircraft. We are modeling it and we're going through the same process that's shown here.

Bob Wood, Hughes Helicopters: Dick, I'd like to compliment you on a fine presentation. As Hughes is one of the participants in it, I just wanted to bring out one of the values among many of the values I think we're finding from this NASTRAN analysis. In the case of the Apache, the second vertical bending mode came out to be practically right on our N per rev and we thought that was really the problem. But using our NASTRAN [model] and taking the percentage of modal contributions, it turned out that for the forced response, the primary contributor to the pilot and cockpit vibration was a wing-symmetric mode down at 14 Hertz. I think this is one of the values we can get out of NASTRAN.