View metadata, citation and similar papers at core.ac.uk
brought to you by CORE
provided by NASA Technical Reports Server

N85-16966

DEVELOPMENT OF THE SPACE SHUTTLE BODY FLAP ACTUATION SUBSYSTEM

Clifton R. Boggs
Sundstrand Advanced Technology Group
Rockford, Illinois

ABSTRACT

Development of the Body Flap Actuation Subsystem included alterations from the original design to mechanical stops, planet gears, control valves, and solenoid valves. The mechanical stops were redesigned to absorb stall load and rotating inertia of the hydraulic motors instead of only stall load. The institution of a quill shaft (torsion spring) was a successful solution. The planet gears in the geared rotary actuators developed cracks during testing. This failure was alleviated via modification to the gears. A motor pressurization - brake release timing technique was developed thru analysis and testing. This resulted in a control valve configuration which would not permit "freewheeling" of the body flap surface. Finally, several solenoid valve configurations were tested to obtain the desired performance.

Conceptual redesigns and modifications were weighed against each other to optimize a solution. Tradeoffs were usually made between life, performance, failure tolerance, and reliability versus weight, envelope, and maintainability.

INTRODUCTION

The Body Flap of the Space Shuttle Orbiter is an aerosurface which protects the rocket engines from the heat of re-entry and also acts as a flight control surface to augment pitch control. The actuation system is an on-off system which consists of a hydraulic valve module/gearbox, (Power Drive Unit) and geared rotary actuators (Figure 1). The valve module contains three redundant valve packs, one for each hydraulic system. Each valve pack has a power control valve, which controls flow to a hydraulic motor. Two solenoid valves shift the control valve to the "up" or "down" position and are respectively marked. The three motor outputs are speed summed in the gearbox to obtain a single output. This output is further speed reduced in the gearbox before being transmitted to the geared rotary actuators. The actuators attach the body flap surface to the orbiter and also function as a hinge. The actuator transmits torque reduced loads to or from the gearbox via torque shafts.

The rate of movement for the body flap surface is controlled in the valve pack. A command in the "up" direction energizes the UP solenoid valve, thus hydraulically shifting the control valve. Flow is circulated thru orifices #2 and #3, which limit the flap rate of movement. A command in the "down" direction energizes the DOWN solenoid valve, thus shifting the control valve in the opposite direction. In this case, the flow rate is limited by orifice #1, which limits the flap rate of movement.

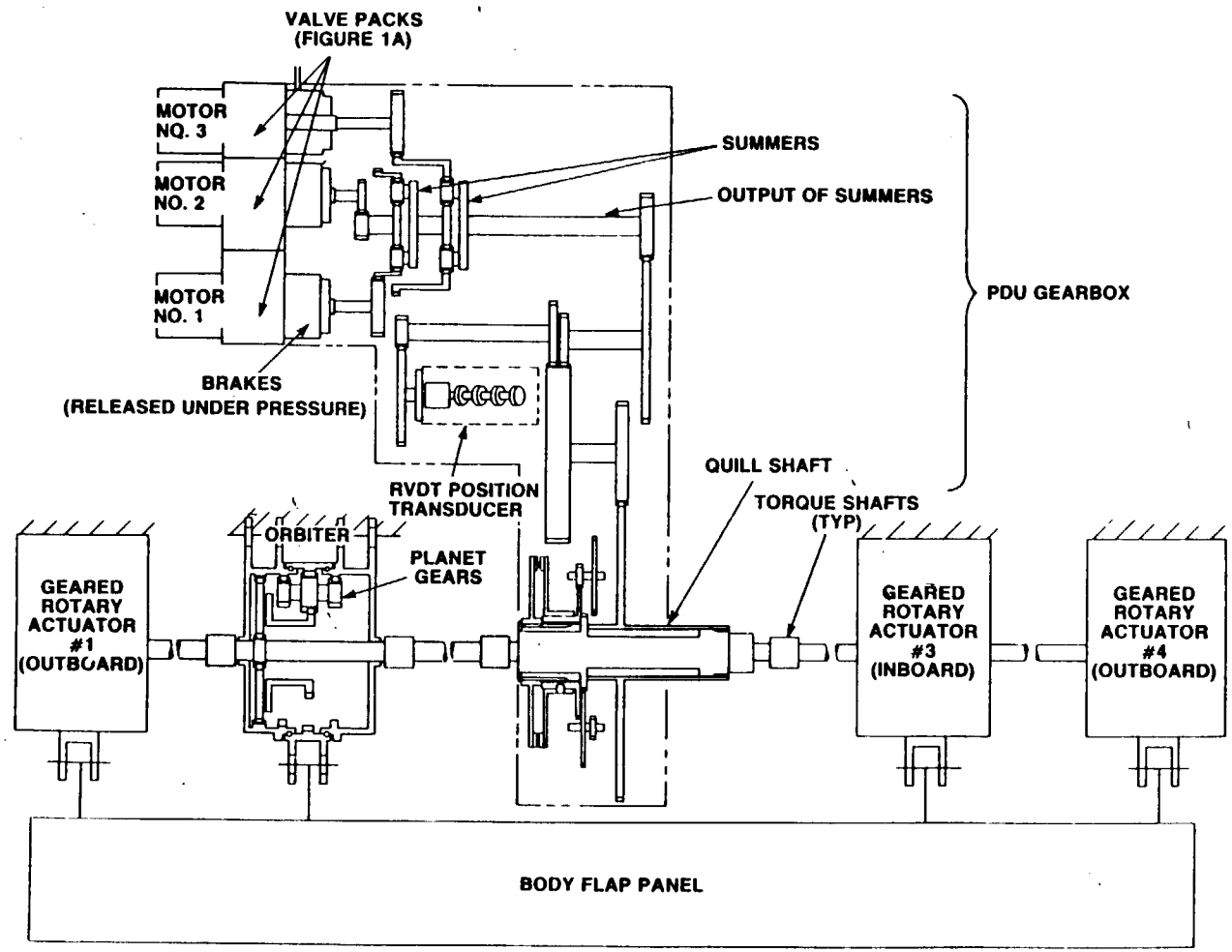

Figure 1
Body Flap Actuation Subsystem

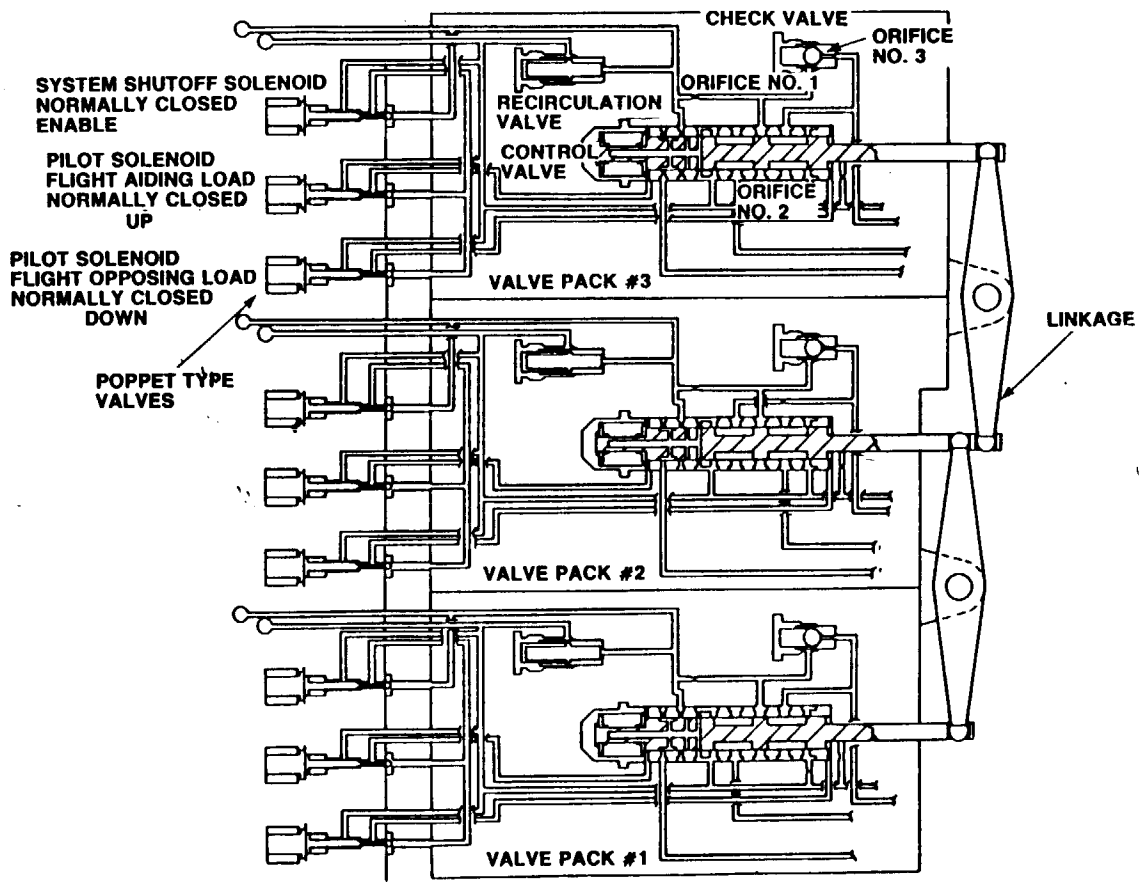

Figure 1A
Body Flap Actuation Valve Pack

Other features are included in the actuation subsystem. An enable valve isolates hydraulic supply to each valve pack. A pressure released brake at the output of each motor prevents backdriving of the motor when it is not pressurized. Mechanical stops limit travel of the body flap surface. A quill shaft (torsion spring) absorbs rotating inertia when the mechanical stops are engaged. A recirculation valve maintains a flow thru the valve pack to stabilize the valve pack temperature.

Development of the Body Flap Actuation Subsystem required the selection of various design concepts and optimization of the selected concepts thru analysis and testing. Areas requiring development effort were the mechanical stops, planet gears in the rotary actuators, brake release timing, and solenoid valves. The mechanical stops need to withstand the rotating inertia of the subsystem moving at full rate. The planet gears need to withstand extremely high loads. The brake needs to be engaged and released only when the motor is carrying the load - to prevent "freewheeling" of the body flap surface. Finally, the solenoid valves need to facilitate the specified subsystem response time (under 0.20 seconds) and withstand a burst pressure of 7500 psi. The following sections give a synopsis of the development effort given in the areas listed above.

MECHANICAL STOPS

Mechanical dog stops limit the amount of travel of the body flap surface. The initial design required the stops to react only the stall load expected by the hydraulic motors. This requirement was determined to be unacceptable. The requirement was upgraded to also require the stops to absorb the full load of the hydraulic motors going at full speed. The inertial loads of the motors would fail the dog stops of the original design. Several new design approaches were investigated and are detailed below.

A. Mechanically driven limit switches could be used which would be tripped at the end of travel. The solenoid valves would be de-energized thereby stopping the motors and engaging the brakes. Note that the control valve automatically engages the brake when flow is restricted from the motors.

B. Stops could be instituted on each of the four actuators as shown in Figure 2. The inertia of the hydraulic motors would be absorbed by the torque shafts (acting as torsion springs) between the actuators and gearbox.

C. Stops which are located at the input to the two inboard actuators could be utilized as shown in Figure 3. The inertia of the motors would be absorbed by the two torque shafts between the gearbox and inboard actuators.

D. Dog stops internal to the gearbox with a quill shaft (torsion spring) designed to absorb the motor inertia could be used. See Figure 4.

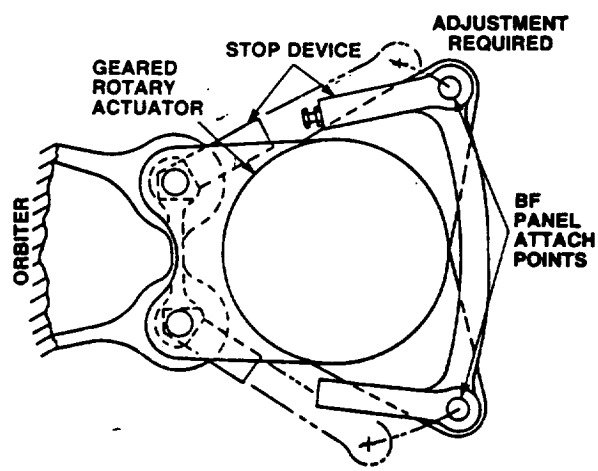

Figure 2
Stops Located on Actuator Output

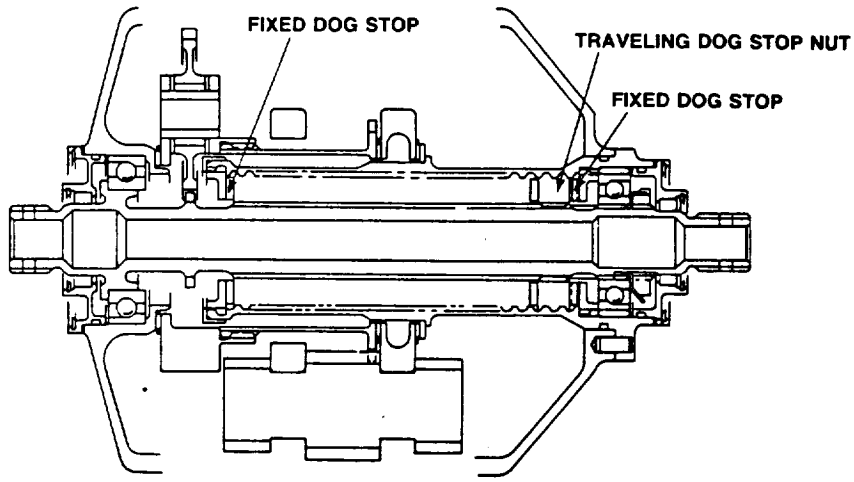

Figure 3
Stops Located on Inboard Actuator

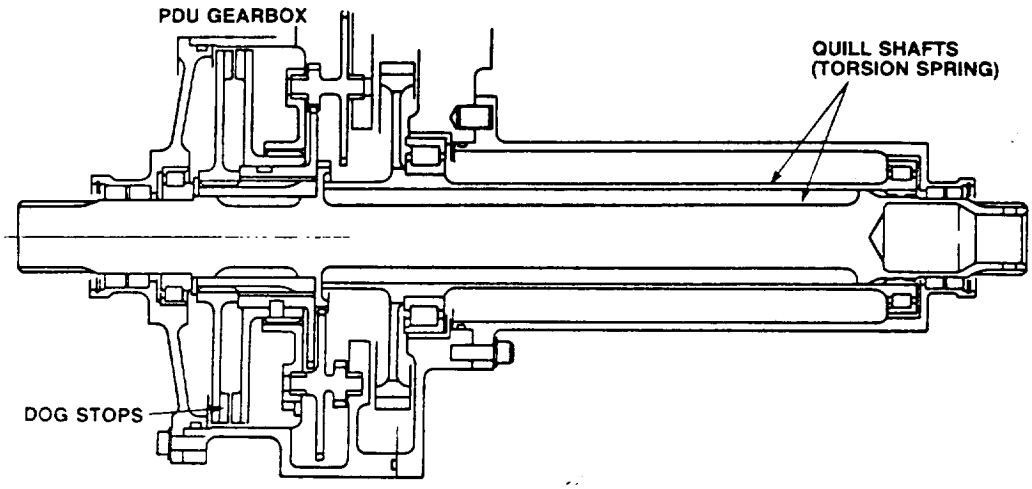

Figure 4
Quill Shaft and Dog Stops in PDU Gearbox

Investigation into each of these design techniques determined that option D was best. Design D required an increase in envelope dimensions along with a weight increase of 5 lbs. to the Power Drive Unit (PDU) (valve packs and gearbox) from 55 to 60 lbs. The other approaches were discarded for the following reasons:

A. Electrical limit switches were considered to have a marginally acceptable reliability level. A mechanical solution was also philosophically preferred to an electrical solution.

B. Actuator stops entailed a significant weight increase along with a major redesign of the rotary actuators.

C. Inboard actuator stops would require a redesign of the inboard actuators along with the PDU. A weight increase of 11 lbs. would have occurred. In addition, testing and rigging of the subsystem would be more complicated.

The design utilizing the dog stops and quill shaft was incorporated into the subsystem. Development and qualification testing of the subsystem has proven the design with no further changes required.

PLANET GEARS

The planet gears in the Geared Rotary Actuators are highly stressed to minimize the weight and envelope of the Body Flap Subsystem. Inspection of planet gears after early development testing revealed cracks in the gear teeth roots (Figure 5). Analyses prior to development testing had shown that the planet gears would survive fatigue testing of 400 mission duty cycles without developing any cracks. Investigation into the failure showed that at maximum load the planet gears deflect several thousandths of an inch. This deflection caused the gear teeth to carry a higher percentage of the load on the inside of the gear teeth than was previously calculated. Refer to Figure 6. Several solutions to increasing the fatigue life were investigated.

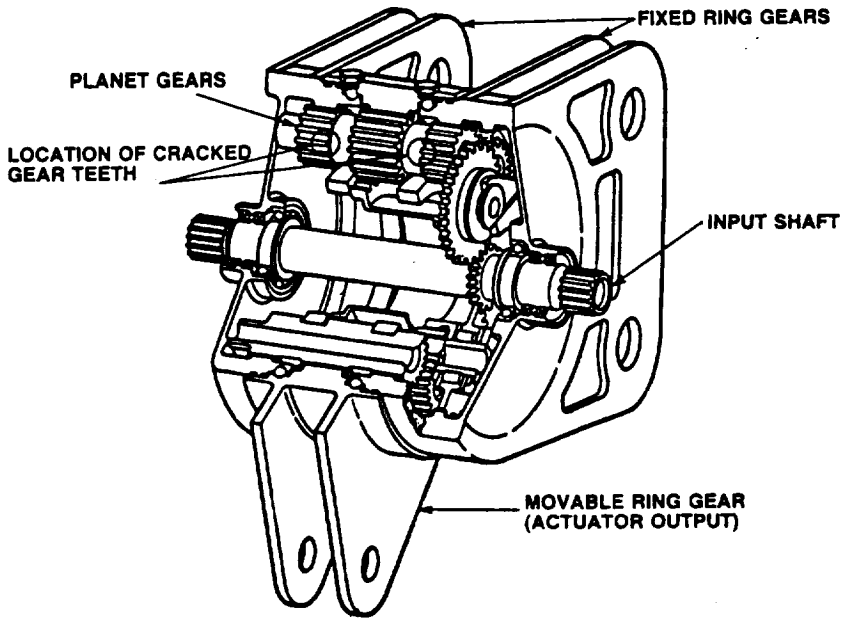

Figure 5
Geared Rotary Actuator

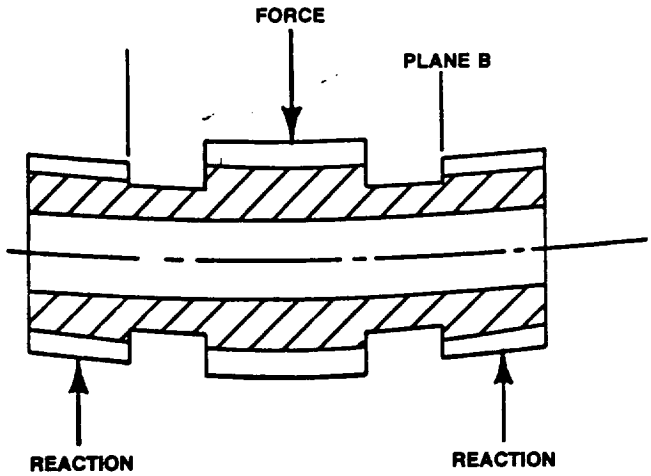

Figure 6
Deflection of Actuator Planet Gears Under Load

A. The actuator could be increased in size.

B. The tooth thickness of the planet teeth could be increased and the tooth thickness of the ring gear decreased.

C. The planet gear teeth could be crowned.

D. The ring gear teeth could be crowned. (See Figure 7)

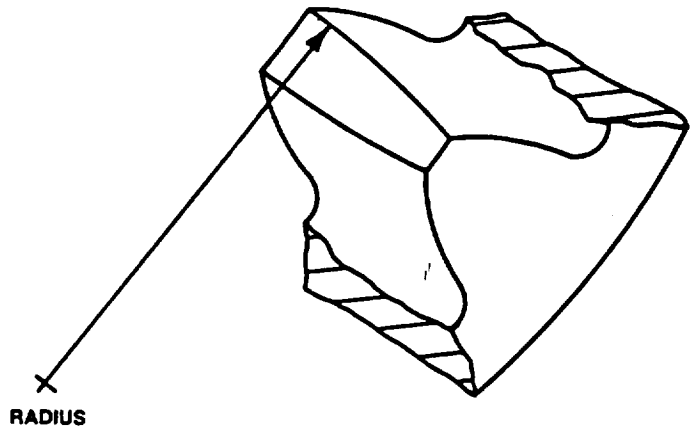

Figure 7
Crowned Ring Gear Tooth

A solution to rectify the failure was extensively investigated. Increasing the size of the actuator was least preferable since this type of change would have a significant weight impact. Crowning of the planet gear teeth would give a minimal increase in life. With this change the stress distribution across the gear tooth root would be improved but more material would be removed from a highly stressed tooth. The solution instituted was a combination optimizing gear tooth thicknesses as in B and crowning the ring gear teeth as in Figure 7. These changes alleviated the stress concentration at the ends of the planet gear teeth. The changes instituted resulted in a significant improvement in fatigue life analytically and was confirmed thru fatigue testing.

MOTOR PRESSURIZATION - BRAKE RELEASE TIMING

The motor pressurization and brake release sequence is considered critical to obtaining the desired operation characteristics of the Body Flap Actuation Subsystem. If a brake is released prior to pressurization of its respective motor, the body flap surface could "freewheel". The desired sequence is for the motor to become fully pressurized (stalled) against the brake. Then the brake can be released. When the system is de-energized the desired sequence is reversed. The motor pressurization - brake release timing was considered a development problem.

The initial design concept of the valve pack entailed a 4 land power valve with the brakes released off of pilot passages from the "up" and "down" solenoid valves. Refer to Figure 8. The pilot flow fed from a commanded solenoid valve and thru an orificed relief valve to release the brake. A remote type of relief valve failure could restrict the brake from engaging upon loss of pilot pressure and de-pressurization of the motor. This failure could permit the body flap surface to "freewheel". A single failure mode of this kind is not permitted. In addition, this concept could produce a timing sequence for the motor and brake which is not desirable or easily modified.

A design concept which showed the most indication of success entailed adding the brake release valve onto the spool and sleeve of the power valve as in Figure 10. Two slight hydraulic short circuits were designed into the valve, one in the brake section, and one in the motor section. This feature would soften brake and motor pressurization. As the spool travels from the null position to the up position (or down position) the short circuits occur just after the supply is opened and just prior to closing the return. See Figure 10. The short circuits occur in the brake and motor simultaneously. Tests on this design confirmed the intended results. As the brake reduced its load holding capability, the motor increased load holding capability, thus preventing a "freewheel" condition.

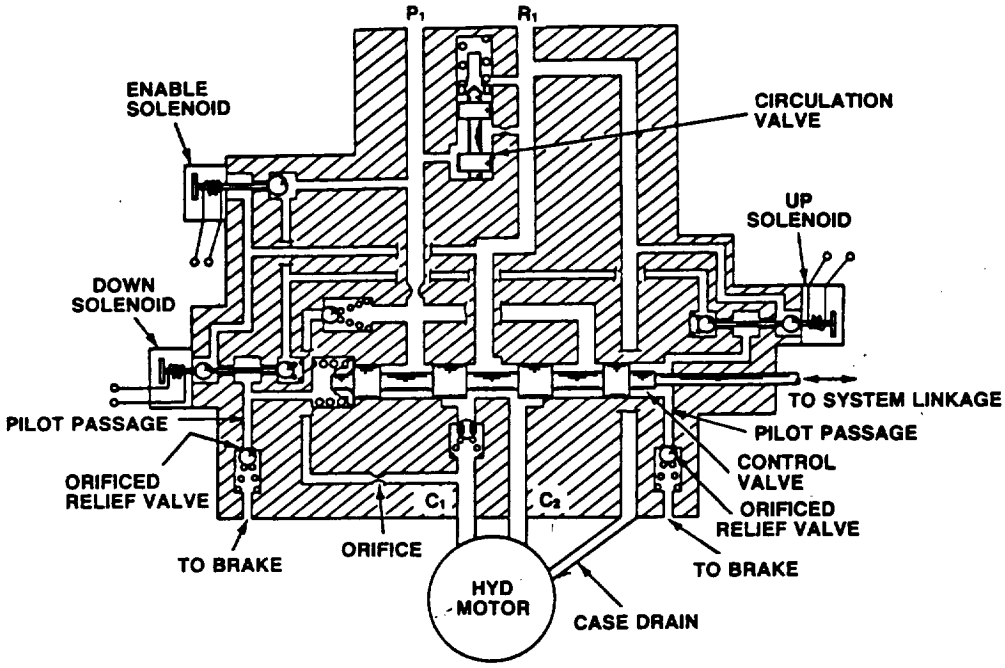

Figure 8
Initial Valve Pack Design Concept

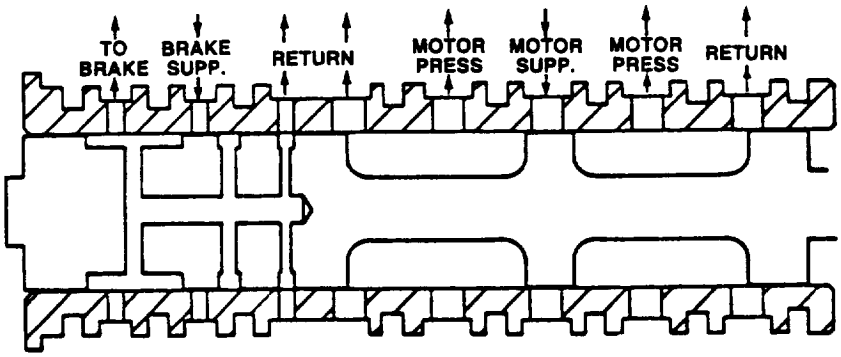

Figure 9
Control Valve in the Null Position

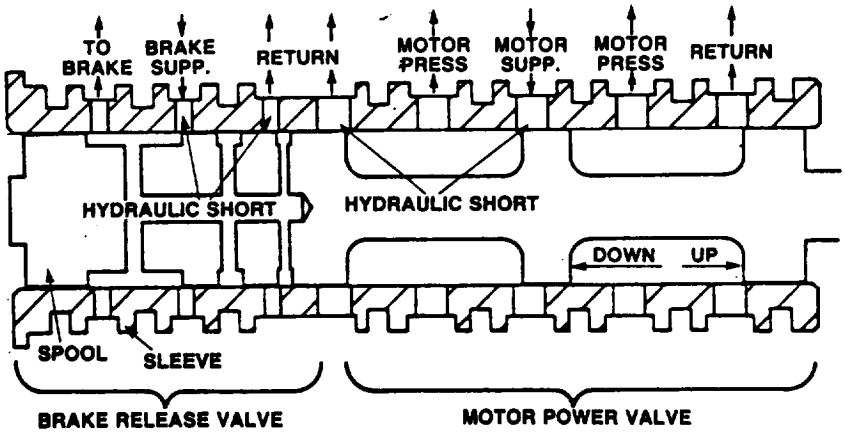

Figure 10
Control Valve Moving From Null to Up Position

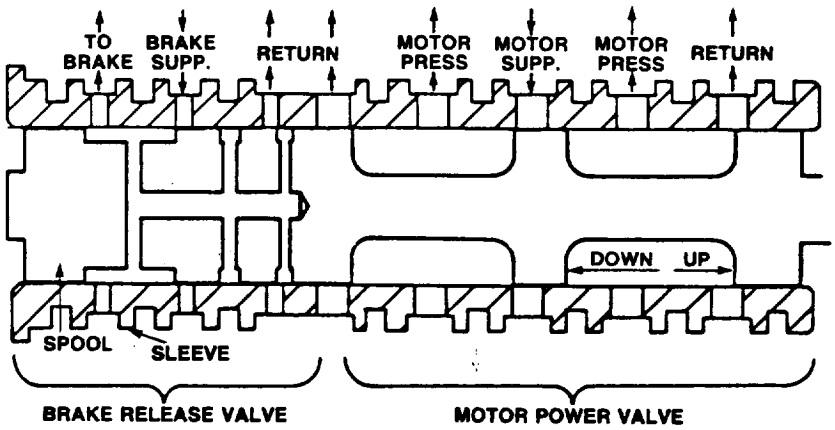

Figure 11
Modified Control Valve Moving From Null to Up Position

Several undesirable effects occurred with the "short-circuit" style design. The first effect was a pressure spike on the supply line as the spool moved into the up or down position. During transition a high flow occurred when the short circuits were open. This high flow quickly slowed, thus causing a pressure spike. The second effect occurred in failure mode testing. With hydraulic system #1 force driving electrically inhibited systems #2 and #3 an excessive amount of lost motion in the linkage would cause incomplete travel of spool #3. The #3 spool would travel to the short circuit position and stop, thus rendering the #3 system stalled.

The final design of the valve pack entailed minor modifications to the "short-circuit" design. The short-circuits were eliminated by increasing several land width dimensions. In addition, the lands were shifted slightly to permit complete motor pressurization prior to pressurizing the brake (i.e. releasing it). See Figure 11. The valve spool linkage was modified to minimize lost motion due to freeplay and bending. Development and qualification testing has shown this design to be very successful.

SOLENOID VALVES

Two types of solenoid valves considered for use in the valve pack were (a) spool and sleeve and (b) poppet. The initial valve pack design used the spool and sleeve type as shown in Figure 12. This type of solenoid has several advantages over the poppet type shown in Figure 13. The spool and sleeve solenoid valve requires a smaller coil for actuation, the valve portion of the solenoid can be made smaller and it is less expensive to manufacture than the poppet solenoid valve.

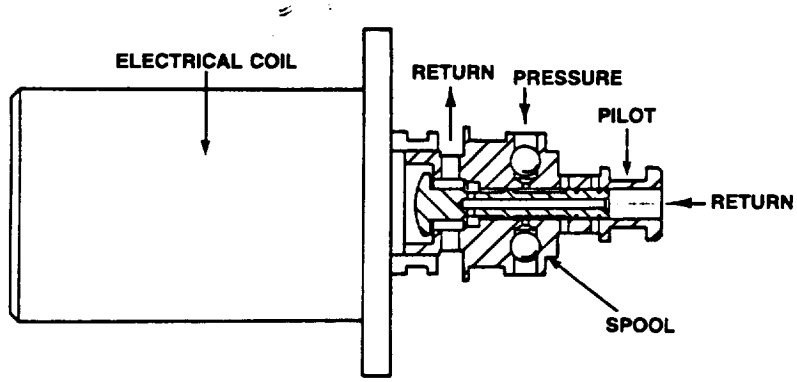

Figure 12
Spool and Sleeve Solenoid Valve 3-Way, 2-Position

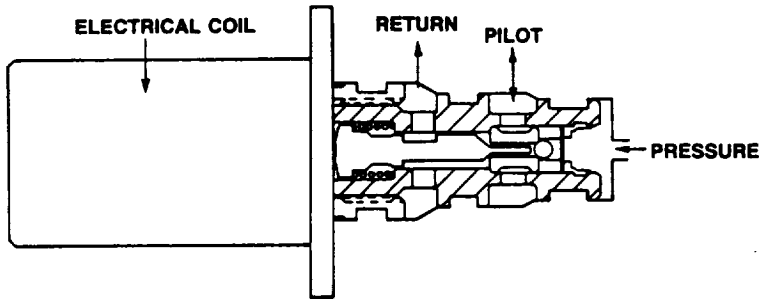

Figure 13
Poppet Solenoid Valve, 3-Way, 2-Position

Development tests performed with the initial valve pack gave an adequate response time for activating the subsystem (.15 seconds) but an inadequate response time for deactivating the subsystem (.20 seconds). An investigation determined that the ports from cylinder to return on the solenoid valve were too restrictive to permit the control valve to shuttle to the null position (from an UP or DOWN position) in the required time. The ports were enlarged and the valves successfully retested. Subsequent testing failures revealed that the edge of the spool land was catching on the edge of the enlarged port holes. These failures triggered a re-evaluation of the selection of a spool and sleeve type solenoid valve.

Re-evaluation of the solenoid valve led to the selection of a poppet style valve. The poppet solenoid valve is less prone to contamination type failures and has a lower leakage rate. In addition, the aerospace industry is somewhat biased towards poppet style solenoid valves. Development of this valve resolved problems with excessive time response and weak flanges. The flanges are designed to contain a burst pressure of 7500 psi. Qualification testing has shown the valve to have excellent performance and reliability.

CONCLUSION

Development of the Body Flap Actuation Subsystem entailed testing, small redesigns, and various modifications. Development testing assisted in identifying areas requiring improvements. The test results triggered redesigns and modifications in items such as stops, planet gears, control valves, and solenoid valves.

Conceptual redesigns and modifications were weighed against each other to optimize the solution to a problem. Tradeoffs were usually made between life, performance, failure tolerance, and reliability versus weight, envelope, and maintainability to obtain the optimum package.

Qualification testing has demonstrated the final configuration's ability to meet endurance, operation, and performance requirements for 4 times life. (Lifetime = 100 mission duty cycles). This configuration has high reliability and failure tolerance while meeting the performance and life requirements to minimize weight.