https://ntrs.nasa.gov/search.jsp?R=19780003129 2020-03-20T12:43:32+00:00Z

IX. EMISSIONS CONTROL FOR GROUND POWER GAS TURBINES

Richard A. Rudey, Richard J. Priem, Albert J. Juhasz,
David N. Anderson, Thaddeus S. Mroz, and Edward J. Mularz
National Aeronautics and Space Administration
Lewis Research Center

Advanced low-emissions combustion technology is being evaluated at the NASA Lewis Research Center for many types of ground power systems. This ongoing work in combustion technology encompasses gas turbine engine combustion for ground transportation, coal combustion for stationary power generation, intermittent combustion for spark ignition (SI) and diesel engines (CI), and continuous combustion for Stirling engines. However, since this paper was written for the aircraft emissions conference, the gas turbine work is described because it is more relevant to the subject of the conference. Furthermore, this paper considers only combustion technology as applied to gas turbine engines for ground transportation propulsion and stationary power generation.

The objective of this conference paper is twofold: (1) to describe the similarities and differences of emissions reduction technology for aircraft and ground power gas turbines and (2) to present and discuss the capability of this technology to reduce ground power emissions to meet existing and proposed emissions standards. Those areas where the developing aircraft gas turbine technology may have direct application to ground power and those areas where the needed technology may be unique to the ground power mission are pointed out. Emissions reduction technology varying from simple combustor modifications to the use of advanced combustor concepts, such as catalysis, is described and discussed.

GROUND TRANSPORTATION PROPULSION

In the area of ground transportation propulsion, several types of applications are presently being considered and evaluated for automotive gas turbine engines. Figure IX-1 shows one of the test vehicles currently being used to evaluate gas turbine engines. This vehicle is a Dodge Aspen manufactured by the Chrysler Corporation. Other automobile manufacturers have similar test vehicles. Figure IX-2 shows the installation of a current-design, 104-horsepower gas turbine engine in this car. The engine includes a regenerator and is designed to operate at a pressure ratio of 4.2. The combustor and regenerator housings are pointed out. An illustrative schematic of this engine showing the airflow path, components, and corresponding cycle conditions at full power is shown in figure IX-3.

At rated conditions the air enters the engine at 85° F and is compressed by the centrifugal compressor to 60.5 psia (ref. 1). The compression process increases the air temperature to 433° F. The compressed air then flows through one section of the ceramic regenerator and is preheated to 1276° F. From the regenerator the preheated combustion air flows to the combustor. The combustor exhaust gases exit at 1925° F to the compressor turbine. After expansion, the hot gases exit from this turbine at 1595° F and 29.49 psia and flow to the power turbine. The hot gases are further expanded in this turbine and exit at 1370° F and 16.1 psia to the regenerator. Heat is removed from the exhaust gases by the regenerator, reducing the exhaust gas temperature to 548° F prior to discharge to the atmosphere. By using a regenerator to recover heat from the power turbine exhaust for preheating of the combustion air, it is possible to improve the specific fuel consumption (sfc) at low cycle pressure ratios.

A cutaway of an advanced heavy-duty gas turbine engine with regenerator being evaluated by Detroit Diesel Allison is shown in figure IX-4. To achieve higher fuel economy, advanced low-pressure-ratio engines such as this will operate at higher combustor and turbine inlet temperatures, as described later. Because of the very high temperatures, material limitations, and economic factors, the hot-zone components must be designed and fabricated from ceramic materials as illustrated in this figure. These include the combustor liner, the turbine rotors and stators, and the rotary regenerator.

Although there are many technical problems associated with the development of gas turbine engines for ground transportation, the primary concern in this paper is exhaust emissions control. Therefore, the following discussion deals only with the combustor.

Figure IX-5 illustrates the principal features of an automotive, reverse-flow, conventional can-type, diffusion-flame combustor. This combustor incorporates all the normal aircraft combustor elements such as fuel injector, ignitor, primary air inlet, and liner with associated film cooling holes and dilution holes. Fuel and air are mixed and burned in a single primary zone at near-stoichiometric ratios and at combustion zone temperatures of 3500° to 4000° F. Dilution air is used to adjust the temperature of the combustor exhaust to the required turbine inlet temperature. Emission characteristics of this combustor and those of advanced combustor concepts are discussed in a later section.

Automotive Emissions Regulations

Federal statutory emissions standards are expressed in terms of the average grams of pollutant formed per mile of an urban driving cycle. This driving cycle, illustrated in figure IX-6 (ref. 2), specifies the vehicle speed in miles per hour (mph) as a function of time in seconds. For emissions testing and certification, vehicles are mounted on a chassis-roll dynamometer and are driven through a specific three-phase Federal driving cycle. The first phase, the cold transient phase, is 505 seconds in duration. This test phase begins with a cold engine. The second phase is 867 seconds in duration and is called the stabilized phase. At the completion of this phase, the engine is turned off. After a period of 10 minutes, the "hot" engine is restarted and the third phase, called the hot transient phase, is conducted by repeating the 505-second transient part of the test. During each test phase, a continuous sample of the engine exhaust is collected in a bag. The exhaust gas in each bag is analyzed for oxides of nitrogen (NO_x), unburned hydrocarbons (THC), and carbon monoxide (CO) to determine the total pollutants emitted in each phse of the driving cycle. From this data, the average emission in grams per mile is determined for each pollutant by using a weighted formula.

For several years, Congress has been applying automotive emissions standards that have become progressively more stringent. Table IX-1 lists the Federal standards for NO_x, CO, and THC emissions in grams per mile for the current 1977 production automobiles and the standards that the law presently requires for the 1978 models (ref. 3). At this time there is some uncertainty as to the capability of the automotive manufacturers to meet these 1978 standards. It is possible that implementation of the 1978 standards may be delayed or that the standards may be applied with slightly higher allowable levels.

For experimental evaluation of advanced combustion concepts at NASA Lewis, emissions goals were selected that are one-half of the 1978 Federal standards for automotive vehicles. These goals were selected to be more stringent than the Federal standards for several reasons. First, combustor emissions performance degrades with operation. The Federal standards in table IX-1 have to be met after the engine and vehicle have been driven 50 000 miles on a durability driving schedule. Although there is only limited 50 000-mile gas turbine engine data, the considerable internal combustion engine performance results available suggest that emissions may increase by as much as a factor of 2. Secondly, engine-to-engine variations resulting from manufacturing tolerances may cause higher emissions for some engines. Finally, the combustion rig tests at Lewis are currently being conducted at steady-state conditions. The automotive transients that are an important part of actual emissions tests cannot be duplicated with present test equipment. Considering these factors, a steady-state goal of one-half of the 1978 emissions standards was selected. Thus, the goal for NO_x emissions was set at 0.2 gram per mile.

Operational Factors

The ability to achieve the aforementioned emissions goals is influenced by gas turbine operational factors. One of the unique features of the automotive gas turbine engine is the combustor and turbine inlet temperatures, shown in table IX-2. Current upgraded engines, that is, those engines that are now being evaluated in test vehicles, operate with nearly constant combustion inlet temperatures of about 1280° F for all speeds from idle to full

power. Corresponding turbine inlet temperatures vary from about 1500° F at idle to just over 1900° F at full power. A proposed future engine cycle, which will be referred to as the advanced cycle, will have a constant turbine inlet temperature of 2500° F. In this cycle, the combustor inlet temperature will vary from 2260° F at idle down to 1700° F at full power. This particular characteristic was selected to optimize cycle efficiency. From an emissions viewpoint, a key feature is that both the inlet and outlet temperatures of the advanced engine combustor are higher.

Another feature of the automotive gas turbine engine operational cycle is that the cycle pressure ratio generally ranges from 4 to 6. The low pressure ratio requires the use of a regenerator to provide the high combustor inlet temperature needed to achieve satisfactory cycle efficiencies. The combustor and turbine inlet temperatures shown in table IX-2 are those that are required for the cycle efficiencies needed to achieve the engine fuel economy shown in table IX-3. In this table, the calculated fuel consumption for the current and advanced engine cycles are compared with actual data from a 1976, 100-horsepower, internal combustion engine used in a 3500-pound vehicle. The levels shown are the average miles per gallon for the Federal urban driving cycle, for the combined or composite cycle, and for the highway cruise cycle. The values shown for the current engine cycle are the expected results based on the successful development of this engine. In contrast, the values for the advanced engine are computed levels, based on the design cycle parameters of this engine. The fuel consumption values of most interest in this paper are those for the urban driving cycle. Since the emissions standards are based on this cycle, the 14-mpg and 26-mpg fuel consumption values were used to compute the emission index goals that appear later in this paper. For controlling emissions, the high inlet and outlet combustor temperatures shown in table IX-2 have both an advantage and a disadvantage. The advantage is that these combustor operating conditions are very conducive for obtaining high combustion efficiency. Therefore, the THC and CO emissions control problem is minimized. The disadvantage is that increasing combustion temperatures generally increases NO_x emissions. Because of the impact of these two trends, the remainder of the automotive gas turbine engine emissions discussion concentrates on NO_x emission control only.

Emissions Control Techniques

The impact that the higher combustor inlet temperatures can have on NO_x emissions is shown in figure IX-7. For this and all subsequent figures, NO_x emissions are expressed in terms of the emission index, which is a conventional technique for evaluating steady-state emissions. The NO_x emission index is defined as the grams of NO_2 formed per kilogram of fuel burned. The impact of combustor inlet temperature on NO_x emissions for a conventional diffusion-flame combustor (ref. 4) is shown. The selected goal of 0.2-gram-per-mile NO_x has also been converted to an NO_x emission index by using a fuel consumption of 14 mpg. The resultant emission index is 1.0.

In a diffusion-flame combustor, combustion takes place on the surface of individual fuel droplets to produce local temperatures near stoichiometric, regardless of the overall equivalence ratio. As a result, NO_x emissions are logarithmically dependent on the combustor inlet temperature. It is evident that, even at the current combustor inlet temperatures, a diffusion-flame combustor would produce NO_x emissions well above the level needed to meet the goal shown in figure IX-7. Obviously, alternative combustion systems will be required.

Premixed combustion. - One such alternative is the premixing combustor, illustrated schematically in figure IX-8. The principal features of this combustor include provisions for atomizing and vaporizing fuel and mixing it with combustion air prior to burning. A bluff-body flameholder is generally used to establish a recirculation zone and thus stabilize the flame. Premixed combustion takes place at a homogeneous equivalence ratio. By burning at a lean, homogeneous equivalence ratio, high flame temperatures (above 3000° F) are avoided and, consequently, NO_x emissions can be maintained at low levels (ref. 5). The NO_x produced by a premixing combustor (ref. 6) is compared with that produced by a diffusion-flame combustor in figure IX-9. The NO_x emission index is plotted as a function of the primary-zone equivalence ratio for a combustor inlet temperature of 1300° F. The symbols represent results that have been extrapolated from experimental data obtained at a combustor inlet temperature of 1000° F (ref. 7). As illustrated, the NO_x produced in a diffusion-flame combustor is relatively insensitive to primary-zone equivalence ratio. In contrast, a very strong dependency is

noted for the premixed flame. Consequently, for lean equivalence ratios, the NO_x produced in a premixing combustor can be as much as two orders of magnitude lower than that produced in a diffusion-flame combustor. However, a very narrow operating range exists between the lean blowout limit and the NO_x goal. Although variable combustor geometry may offer one approach to operating within this range, other lean-combustion concepts are also being investigated and are discussed later in this paper. Figure IX-10 illustrates the principal features of a premixing combustor in comparison with a diffusion-flame combustor. The premixing combustor can be almost identical in size, except that a premixing chamber is required. Fuel and air enter this premixing chamber, where atomization and vaporization of the fuel and mixing of the air and fuel take place. The resulting lean, homogeneous mixture then discharges into the reaction chamber, where a large recirculation zone is established and stable burning is achieved.

The principal features of the premixing combustor are very similar to aircraft-type designs presented at this conference. The premixing technology that is being evaluated for automotive gas turbines will certainly benefit from much of the aircraft-based research conducted to date and planned in the future.

Catalytic combustion. - As stated in the previous section, the premixing combustor has to operate over a very narrow range to meet the NO_x goal. Another alternative low-emission concept being actively considered is catalytic combustion, as illustrated in figure IX-11. The catalytic combustion process is heterogeneous and requires a premixing, prevaporizing fuel-air preparation system. The combustion reactions occur on a catalyzed surface rather than in the gas phase. Since the properties of the catalyst enable the reaction to occur at lower levels of activation energy and increase the rate of reaction, combustion can take place at equivalence ratios below the lean flammability limit (ref. 8). Thus, the catalytic combustor appears to be an attractive approach for obtaining the ultra-lean combustion needed to meet the NO_x emission goal.

For several years, catalytic combustion has been evaluated experimentally at NASA Lewis in a combustion test rig having a typical catalytical test section as illustrated in figure IX-12. Catalyst test elements, installed in the test housing, were fabricated of ceramic honeycomb monoliths with a

noble metal catalyst coating. A typical catalytic test element assembly is shown in figure IX-13. In figure IX-14, the range of experimental catalytic combustion NO_x data is compared with the premixing and diffusion-flame values shown previously as a function of primary-zone equivalence ratio. Since the NO_x concentrations were at or below the minimum accurate measuring limit of the emission analyzer (~0.1 g/kg fuel burned), the results are shown as a band extending below this limit. Even at this limit, the NO_x emissions would be approximately an order of magnitude below levels required by the design goal. Furthermore, the catalytic combustor may not require the complexities of variable geometry; therefore, it has the potential to be a simpler combustor than the premixing type (ref. 8). In comparison with the diffusion-flame combustor the catalytic combustor may be as much as 10 to 20 percent larger, as illustrated in figure IX-15. The catalytic combustor requires a uniform fuel-air ratio at the inlet to the catalyst bed. As illustrated, more than one type of catalyst may be used in the reaction zone (catalyst bed). A catalyst with low ignition temperature characteristics could be used at the front of the bed, and the catalyst at the back could be chosen for high conversion efficiency. Preheating the bed during cold-engine starting is required. This would probably be accomplished with a small auxiliary conventional combustor.

Surface combustion. - As discussed in reference 9, another method of controlling NO_x emissions is a technique called surface combustion, illustrated in figure IX-16. This concept also requires fuel-air premixing. The fuel-air mixture flows through a porous ceramic element that serves as a flameholder. Heat is removed from the flame by the ceramic element, thus cooling the flame. A portion of the heat removed is converted to infrared energy and the remaining portion is transferred to the cooling air. Because heat is removed from the flame, the adiabatic flame temperature is not reached and the rate of NO_x formation at a given inlet equivalence ratio is thereby reduced.

Figure IX-17 shows a flame seated on a surface combustor made of a porous ceramic disk. Tests conducted with a surface combustor (ref. 10) have achieved low NO_x emission levels, as indicated in figure IX-18. The NO_x emissions are again plotted against the primary-zone equivalence ratio. For a reference the curves for the diffusion-flame and premixing combustors

and the NO_x emission goal are included in this figure. The surface combustion emissions were an order of magnitude lower than the goal. As in the case of the catalytic combustion data, actual data points are not plotted as the emissions were below measurable levels. Unfortunately, stable flames are only achieved in such a combustor at very low flow rates. Thus, a large combustion surface area is required for the level of flow rate needed in a practical engine combustor. A conceptual design of a surface combustor for use in the gas turbine engine is proposed in reference 10 and shown in figure IX-19. The diffusion-flame combustor is also shown for comparison. The premixed fuel and primary air flow through passages and into the combustor through the porous ceramic walls. Secondary air is used to cool the ceramic by flowing through tubes molded in the ceramic walls. Preliminary calculations indicate that the surface combustor must be longer than the conventional diffusion-flame combustor.

An application of the surface combustion technique that does not use a porous element is illustrated schematically in figure IX-20. Fuel-air premixing is also required for this concept. Fuel is injected into a flowing stream of air at the inlet to the element. Premixing begins to occur at the inlet to the element and is completed within the stepped annular passages. Homogeneous combustion occurs in the latter portion of the element. The element passage is stepped to obtain high turbulence and good flame-holding characteristics, thereby holding the flame within the ceramic element. Heat is transferred from the flame to the ceramic walls of the element, and finally to the cooling air.

Figure IX-21 is a photograph of a flame in an experimental ceramic element, showing the hot ceramic surfaces and the flame from the exhaust end of the combustor. Results of emissions tests conducted with a ceramic element are shown in figure IX-22. Emission index is plotted against equivalence ratio for a combustor inlet temperature of 1300° F. The ceramic element data have been extrapolated from experimental results obtained at 1000° F combustor inlet temperatures. The test results presented earlier for porous-plate surface combustors, diffusion-flame combustors, and premixing combustors are also shown for comparison. The results are encouraging, as the measured emissions were below the goal. The advantage of this combustor in comparison to the porous-plate surface combustor is that it can operate with high flow rates. A multielement ceramic combustor

concept is illustrated in figure IX-23. As noted, the combustor assembly contains many small elements. Fuel is injected only to those elements that have stepped passages to premix fuel and air. The other passages are cylindrical and are used to provide dilution airflow, which is used to cool the ceramic and the exhaust gases. As engine power and/or speed is varied, the flow to individual fuel elements would be regulated to vary the overall fuel-air ratio. As illustrated in this figure, the multielement ceramic combustor could be the same size as the diffusion-flame combustor.

Predicted Emissions

This section summarizes the predicted NO_x emission control capabilities of the technology discussed to this point. Figure IX-24 shows the predicted NO_x emission indices based on the cycle temperatures of the current engine and for an urban-cycle fuel economy goal of 14 mpg. The standard for this fuel economy is also indicated. The resulting predictions are shown for the premixing, multielement, and catalytic combustion techniques over a range of speeds from idle to full power. Predicted emissions are based on operation at an equivalence ratio 10 percent above the lean blowout limit. This value was selected to ensure high efficiency and adequate combustion stability. Although the premixing combustor emissions fall within the standard, they exceed the goal slightly. Both the catalytic and multielement combustor predictions indicate that the goal can be met with a comfortable margin at the current engine cycle temperature. These predictions are based on steady-state measurements and do not include the effects of transient operation that would be encountered during the Federal driving cycle.

The NO_x emissions predicted for the advanced automotive gas turbine cycle temperature conditions are summarized in figure IX-25. The emission index levels corresponding to the goal and standard, both based on the advanced-cycle fuel economy of 26 mpg, are also indicated. Predicted emissions at steady-state conditions are again shown for the premixing, multielement, and catalytic combustion techniques. The NO_x emissions of all the combustion techniques are higher at the advanced-engine cycle conditions because of the increased combustor inlet temperature. For this

cycle the emissions decrease with increased speed because of the decreasing combustor inlet temperature. These predictions indicate that the NO_x goal can be met only with the catalytic and multielement combustion techniques at all operating conditions of the advanced-engine cycle.

Summary

To summarize the discussion of ground transportation propulsion, it has been shown that conventional gas turbine engine combustion techniques will not generally satisfy the Federal automotive NO_x standards. The ability to meet future NO_x standards in advanced automotive engine cycles will likely require the development of very advanced technology, such as the ceramic multielement or catalytic combustors. Although the premixing combustor can meet the goal in steady-state operation, it appears to be marginal when all factors are considered.

In addition to the challenges in combustion technology that must be overcome, several engine operational factors may also affect the ability to meet the automotive emissions standards: (1) fuel flexibility ranging from the use of diesel oil to possibly methanol, (2) the impact of engine transients because the engine rarely operates at steady-state conditions, and (3) the need to allow for potential degradation. These are just a few of the more readily identifiable considerations. These plus many others must be accounted for in the evaluation and development of emissions control techniques for automotive gas turbine engines.

STATIONARY POWER GENERATION

A current gas turbine engine used for stationary power generation is shown in figure IX-26. It is a Westinghouse model 501 heavy-duty gas turbine engine capable of producing approximately 100 megawatts of electric power. The engine is 25 feet long and 11.5 feet in diameter and weighs 140 tons. A cutaway view of the engine is shown in figure IX-27. The engine has 19 compressor stages and an overall pressure ratio of 12.7. The com-

bustion system is composed of 16 combustor cans that are arranged in an annular array. A sketch of a conventional combustor can, typical of those used in several current stationary power gas turbines, is shown in figure IX-28. It is nearly identical to those used in several contemporary aircraft gas turbines. Fuel is sprayed into the primary zone to burn with a portion of the airflow at near-stoichiometric conditions. Additional air is provided for liner cooling. Downstream air is then added to dilute the combustion products to the temperature level required by the turbine and to tailor them to the turbine inlet temperature profile.

Emissions Performance

Since stationary power gas turbine engines normally operate at full load (full power), the resulting emissions of THC and CO are minimal. Standards are not currently being proposed for these emissions. However, the pollutants that may be regulated in the future are NO_x, smoke, and the oxides of sulfur (SO_x). Since SO_x is a problem related to the sulfur in the fuel and not to the combustion process, it is not considered in this paper.

Table IX-4 illustrates the emissions reduction requirements of a typical stationary power gas turbine. Current operational emissions levels for NO_x and smoke are shown with the proposed standard for NO_x. The NO_x emission levels, which are usually expressed in parts per million at 15-percent excess oxygen, have been converted to emission index values as shown. Current stationary power engines would require substantial reductions in NO_x emissions, from emission index values as high as 18 down to 6. Although no Federal standard has yet been proposed for smoke, it is regulated by state and local standards (ref. 11). Smoke emissions from current engines have an average opacity number of about 10, which is at the threshold of visibility and would thus meet most local standards.

Before discussing emissions control techniques, identification of the cycle conditions considered in this paper is necessary, since NO_x emissions are highly dependent on the operational parameters. A comparison of the cycle conditions for both current and advanced engines is shown in table IX-5. Both the current and advanced stationary power engines operate at conservative pressure ratios and combustor inlet temperatures. However, the turbine

inlet temperature for advanced engines may be as high as 3000° F. At these temperatures, the problem of NO_x control will become even more difficult than it is now.

Emissions Control Techniques

Various NO_x emission control techniques are being investigated for stationary power gas turbine engines.

Water injection. - One technique that is currently being used is water injection. The effectiveness of water injection to reduce NO_x emissions is illustrated in figure IX-29, which plots an NO_x emission ratio versus the ratio of water flow to fuel flow used in an experimental combustor. The NO_x emission ratio was calculated from the emissions measured with water injection divided by the emissions measured without water injection. The band indicates the range of data scatter. At a water flow to fuel flow ratio of 1, emissions were reduced to about one-fourth of the value obtained without water injection. From an emissions viewpoint these data are certainly encouraging. However, there can be an associated performance penalty. For example, for the data shown here, the CO emissions of the combustor increased rapidly at water flow to fuel flow ratios greater than 0.5. The corresponding decrease in combustion efficiency associated with this CO increase would make this technique impractical at these high ratios. A schematic of the experimental combustor used to obtain the water injection data is shown in figure IX-30 (ref. 12). The combustor shown in this figure is an annular ram-induction combustor with scoops in both the inner and outer liners to capture air and force it into the combustion and mixing zones. Fuel was injected through 24 nozzles, and water was injected at 24 locations upstream of the fuel nozzles. Although the water injection data were obtained in this experimental combustor, the NO_x reduction characteristic shown in figure IX-29 should be typical of what can be achieved in most conventional combustors. Although water injection can be quite effective, NO_x control without water injection is desirable and may even be mandatory in many applications. Therefore, other techniques of reducing NO_x emissions in stationary power gas turbines must be developed.

Premixing and catalytic combustion. - NO_x emissions obtained with premixing and catalytic combustion techniques at the previously described current stationary gas turbine power conditions are shown in figure IX-31. In contrast to the automotive gas turbine results, which were appropriate to combustor inlet temperatures of 1300° to 2200° F, the stationary power gas turbine engine operates at a much lower combustor inlet temperature of 700° F, as indicated in the figure. As before, NO_x emission index is plotted as a function of primary-zone equivalence ratio. Experimental premix data from combustor rig tests (ref. 6) are included, along with predicted curves for premixing (ref. 5) and diffusion-flame (ref. 4) combustors. The proposed standard is given for reference. The premixing combustor operating with a primary-zone equivalence ratio above the blowout limit of 0.54 produces emissions well below those of the diffusion-flame combustor and well within the proposed emissions standard. The catalytic combustor, which can operate at a lower primary-zone equivalence ratio, produces emissions that are about two orders or magnitude below both the standards and the emissions from a diffusion-flame combustor (ref. 7). The methods needed to apply either the premixing or catalytic combustion technique to stationary power gas turbines would be very similar to the methods described for the automotive gas turbines. However, development of the stationary power engine combustors for use with light distillate fuels may be easier because size constraints would not be as severe. Advanced high-temperature stationary engines will likely use annular combustor configurations (similar to current aircraft types) in order to provide improved durability and an improved exit temperature pattern factor. Nevertheless, all the concepts described should be applicable to annular combustors as well as to current can combustors.

The results described in this paper are all referenced to the use of a light distillate or JP type of fuel, which is refined to controlled specifications and is relatively free from contaminants, such as trace elements. In some applications, however, stationary gas turbines must operate with a wide variety of fuels. The emissions problems resulting from combustion of these fuels (e.g., residual fuels) are described in the next section.

Effect of Fuel Properties

The NO_x emissions discussed to this point are those formed by the reaction of atmospheric nitrogen and oxygen at the elevated temperatures in the combustion zone. The NO_x formed in this manner is commonly referred to as thermal NO_x.

One of the major problems of controlling NO_x emissions in the combustion of heavy distillate and residual fuels is that, in addition to formation of the thermal NO_x, oxides of nitrogen are also formed directly by the oxidation of chemically bound nitrogen atoms in the fuel. The NO_x formed by this mechanism is commonly referred to as organic NO_x. Although the detailed mechanism is not fully understood, the rate of this organic NO_x formation is strongly dependent on oxygen availability and the nitrogen content of the fuel. Hence, the nitrogen content is a critical fuel property in terms of its effect on total NO_x emissions. The range of nitrogen content in various fuels is shown in figure IX-32, in percent by weight, by means of a logarithmic bar chart. The range is shown for light and heavy distillates obtained from petroleum and from coal-derived and shale-derived crude oils. The fuel nitrogen content can vary over nearly three orders of magnitude, ranging from below 0.01 percent for the light petroleum distillates to as high as 2.7 percent for the heaviest shale derivative fractions. As mentioned previously, the detailed mechanism of NO_x formation from fuel-bound nitrogen is not fully understood. Experimental data (ref. 13) have shown, however, that all of the nitrogen in the fuel is not converted to NO_x. Unfortunately, there is a lack of agreement regarding the percentage of fuel-bound nitrogen that is eventually converted to NO_x. Reported values on the degree of conversion range from 25 percent for fuels with a nitrogen content in excess of 0.4 percent to 100 percent for fuels with a nitrogen content below 0.05 percent. To illustrate the problem of NO_x formation from fuel-bound nitrogen, it can be assumed that a hypothetical combustor, which achieves zero thermal NO_x emissions, is being supplied with fuels of progressively higher nitrogen content. As shown in figure IX-33, if it is assumed that 50 percent of the organic fuel nitrogen is converted to NO_x in the combustion process, a plot can be made of an NO_x emission index as a function of the fuel-bound nitrogen in weight percent. The NO_x emission index increases rapidly with fuel-bound nitrogen content, so that the proposed standard level would be reached

at a nitrogen content of 0.4 percent. This corresponds to the upper limit for the heavy petroleum distillates shown in figure IX-32. For a nitrogen content of 2.7 percent, representing the heaviest shale fractions, the standard would be exceeded by nearly an order of magnitude. In reality, much higher NO_x emissions would likely be realized because thermal NO_x would be additive to these values. These results indicate that current combustion techniques are inadequate and that new combustion concepts may be needed to solve the organic NO_x problem.

Multiple-Burning-Zone Combustion

One concept that has been proposed for controlling NO_x formed from fuel-bound nitrogen is shown in figure IX-34. This is a sketch of a multiple-burning-zone combustor incorporating a rich primary zone with a local equivalence ratio between 1.5 and 5. Fuel-bound nitrogen would be released due to the temperature rise obtained by the partial burning of the fuel in this zone. The formation of NO_x would be retarded because of the lack of free oxygen in the fuel-rich environment. Additional air would then be admitted in the secondary zone to ensure complete combustion of the fuel and for exhaust gas temperature control. There are still many unknowns in this process, and a large number of variables must be optimized before this concept can achieve efficient operation. In addition, the very rich combustion in the primary zone may cause difficulties in controlling smoke and unburned hydrocarbon emissions. Similar problems may have to be considered in the design of future aircraft engine combustors, with the possible use of alternative fuels. However, the use of heavy distillates with very high fuel-bound nitrogen will add a dimension to stationary power emission control that is without precedent in aircraft engines.

Summary

Traditionally, the stationary gas turbine engine has been designed with two major goals: (1) minimum capital cost and (2) minimum operational and maintenance cost. In recent years, NO_x emissions have become an addi-

tional consideration that affects combustor design. In the future, the potential use of fuels other than light distillates and the use of high cycle temperatures will create additional problems for the combustor designer. Combustion of low-Btu fuels may lead to flame stability problems similar to those encountered with lean-burning systems. One solution to this problem may be to augment the combustion either by heating the fuel or by using a torch to burn a high-Btu fuel in the primary zone. Another solution could be catalytic combustion. Corrosion problems in the gas turbine may be encountered with the use of residual (heavy distillate) fuels as a result of the impurities and as a result of higher turbine inlet temperatures. Advances in material technology, borrowed in part from aircraft combustor expertise, may be the solution to these problems. Other solutions would be to remove the impurities and to improve the cooling techniques. Advanced cooling concepts could also benefit from experience gained in the aircraft field. Finally, increased flame luminosity and, therefore, high combustor liner temperatures can be expected to occur when residual oils and coal-derived liquid fuels are burned. The paper on alternative fuels in this conference report discusses the problems associated with these fuels in detail. However, these types of alternative fuels may have an inherently low hydrogen-to-carbon ratio, thus producing a high levels of soot in the primary zone. Improved materials, the use of thermal-barrier coatings, and improved cooling techniques may be required for the successful use of these alternative fuels. Consideration and detailed discussion of all the stationary gas turbine problem areas are beyond the scope of this paper, which only considers the combustor-emission-related problems. The discussion clearly points out that emission restraints are only one of several new considerations that combustor designers will have to cope with in the development of future stationary-power gas turbine engines.

CONCLUDING REMARKS

This paper only briefly discussed several of the known techniques for reducing ground power gas turbine emissions. Many of the statements in this paper on the need for advanced technology to meet both current and future standards are based on Federal emissions standards as they are currently specified or proposed. Obviously, any changes in those standards may affect

the type of technology needed. In addition to the technical challenges related to developing the needed combustor technology, the type of application can also have an effect on the development of this technology. Three critical features for aircraft gas turbine engines are that combustors must be small in size and operate in a high-pressure, high-temperature environment. This combination makes control of all emissions a very difficult task. For automotive gas turbine engines, several critical factors are size, high temperature, and transient operation. The very high temperatures currently being considered for advanced engines will make the job of controlling oxides of nitrogen emissions extremely difficult. Transient operation will make controlling all emissions difficult because of the continuously varying conditions within the combustor. Size may also impact all emissions. For stationary power gas turbines, the one most critical factor will likely be the requirement for using poor-quality fuel, especially those fuels containing high levels of fuel-bound nitrogen such as the residual and synthetic oils.

Even though the advanced combustor technology that was described in this paper takes these factors into account, much of the technology described is only in the experimental stage of evaluation. Developing these technologies to the point where they can be used in service will require large-scale research and development efforts. To help satisfy this need, Lewis is currently involved in two ERDA-sponsored projects. One project deals with highway vehicle gas turbines and includes the combustor technologies and engine types that were described in this paper. This project is currently being implemented. The other project is in the planning stage and will include many of the stationary power gas turbine technologies that were described. One of the many goals of these two projects is to evolve and demonstrate the combustor technology needed to provide environmentally acceptable ground power gas turbine engines. This goal must, of course, be accomplished while also satisfying many other operational requirements, such as low fuel consumption, multifuel capability, good component durability, low maintenance, and low initial cost.

REFERENCES

1. Schmidt, F. W.; and Wagner, C. E.: Baseline Gas Turbine Development Program, Seventeenth Quarterly Progress Report. COO-2749-17, Chrysler Corp., 1977.
2. Title 40 - Protection of Environment; Chapter 1 - Environmental Protection Agency; Part 85 - Control of Air Pollution from Motor Vehicles and New Motor Vehicle Engines. Fed. Regist., vol. 37, no. 221, pt. II, Nov. 15, 1972, pp. 24250-24320.
3. Title 40 - Protection of Environment; Chapter 1 - Environmental Protection Agency; Part 85 - Control of Air Pollution from New Motor Vehicles and New Motor Vehicle Engines; Part 86 - Control of Air Pollution from New Motor Vehicles and New Motor Vehicle Engines: Certification and Test Procedures. Fed. Regist., vol. 42, no. 59, Mar. 28, 1977, pp. 16397-16410.
4. Lipfert, F. W.: Correlation of Gas Turbine Emissions Data. ASME Paper 72-GT-60, Mar. 1972.
5. Fletcher, R. S.; and Heywood, J. B.: A Model for Nitric Oxide Emissions from Aircraft Gas Turbine Engines. AIAA Paper 71-123, Jan. 1971.
6. Boccio, J. L.; Weilerstein, G.; and Edelman, R. B.: A Mathematical Model for Jet Engine Combustor Pollutant Emissions. (GASL-TR-781, General Applied Science Labs.; NASW-2235.) NASA CR-121208, 1973.
7. Marek, Cecil J.; and Papathakos, Leonidas C.: Exhaust Emissions from a Premixing, Prevaporizing Flame Tube Using Liquid Jet-A Fuel. NASA TM X-3383, 1976.
8. Anderson, David N.; Tacina, Robert R.; and Mroz, Thaddeus S.: Catalytic Combustion for the Automotive Gas Turbine Engine. NASA TM X-73589, 1977.
9. Juhasz, A. J.: Surface Combustion. ERDA Highway Vehicle Systems Contractors Coordination Meeting, Eleventh Summary Report. CONF 76-1028, 1977, pp. 225-230.

10. Rossbach, Richard J.: Development of Low Emission Porous-Plate Combustor for Automotive Gas Turbine and Rankine Cycle Engines. EPA-460/3-73-001, General Electric Co., 1973.

11. Duncan, L. J.: Analysis of Final State Implementation Plans - Rules and Regulations. APTD-1334, May 1975.

12. Marchionna, Nicholas R.; Diehl, Larry A.; and Trout, Arthur M.: The Effect of Water Injection on Nitric Oxide Emissions of a Gas Turbine Combustor Burning ASTM Jet-A Fuel. NASA TM X-2958, 1973.

13. Dilmore, J. A.; and Rohrer, W.: Nitric Oxide Formation in the Combustion of Fuels Containing Nitrogen in a Gas Turbine Combustor. ASME 74-GT-37, Apr. 1974.

AUTOMOTIVE EMISSION STANDARDS

g/mi

	HC	CO	NO_x
1977	1.5	15.0	2.0
1978	.41	3.4	.40

Table IX-1.

CS-77-467

CYCLE TEMPERATURES

% DESIGN SPEED	CURRENT		ADVANCED	
	COMB. INLET, °F	TURB INLET, °F	COMB. INLET, °F	TURB INLET, °F
50 IDLE	1293	1525	2260	2500
60	1292	1588	2100	↓
70	1288	1665	2000	↓
80	1284	1750	1880	↓
90	1279	1842	1790	↓
100	1276	1925	1700	↓

CS-77-472

Table IX-2.

FUEL ECONOMY COMPARISON
100 hp 3500 lb VEHICLE

DRIVING SCHEDULE	CURRENT ENGINE*	ADVANCED ENGINE**	1976 IC ENGINE
URBAN	14	26	17
COMPOSITE	17	30	19
HIGHWAY	24	39	23

*ESTIMATED UPGRADED PERFORMANCE.
**GOAL.

CS-77-468

Table IX-3.

STATIONARY POWER EXHAUST EMISSIONS

	CURRENT LEVELS		PROPOSED STANDARD	
	EI	PPM	EI	PPM
NO_x	13-18	175-275	6.0	75
SMOKE (OPACITY)	10.0	-------	----	---

CS-77-462

Table IX-4.

STATIONARY POWER ENGINE CYCLE CONDITIONS

	CURRENT	ADVANCED
PRESSURE RATIO	12-16	16-20
COMBUSTOR INLET TEMP, ^{0}F	624-715	715-800
TURBINE INLET TEMP, ^{0}F	2000	2500-3000

CS-77-461

Table IX-5.

ERDA GAS TURBINE ENGINE TEST VEHICLE

Figure IX-1.

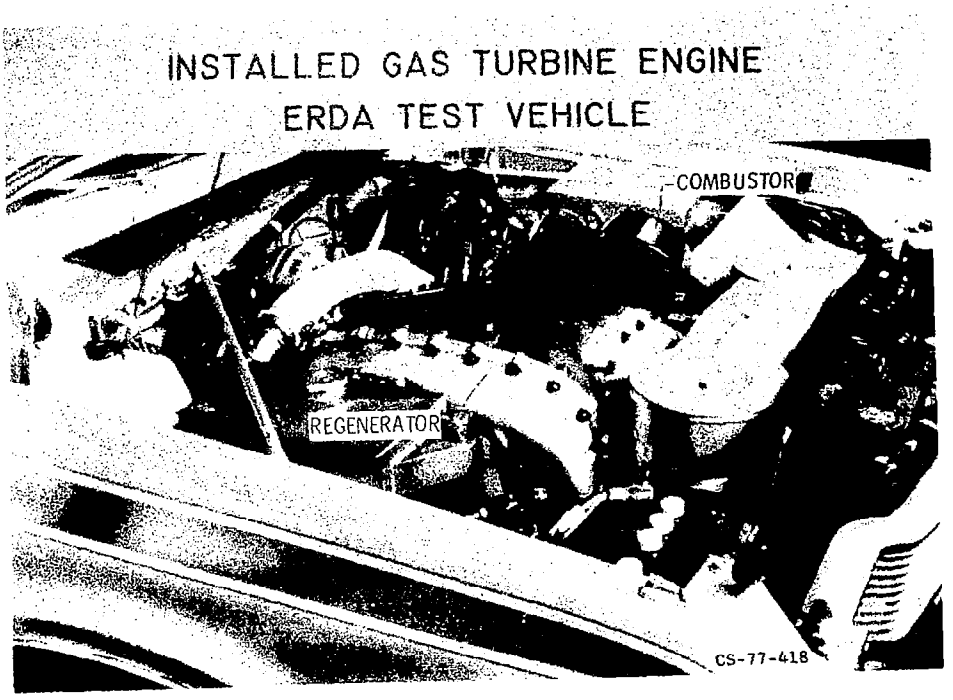

Figure IX-2.

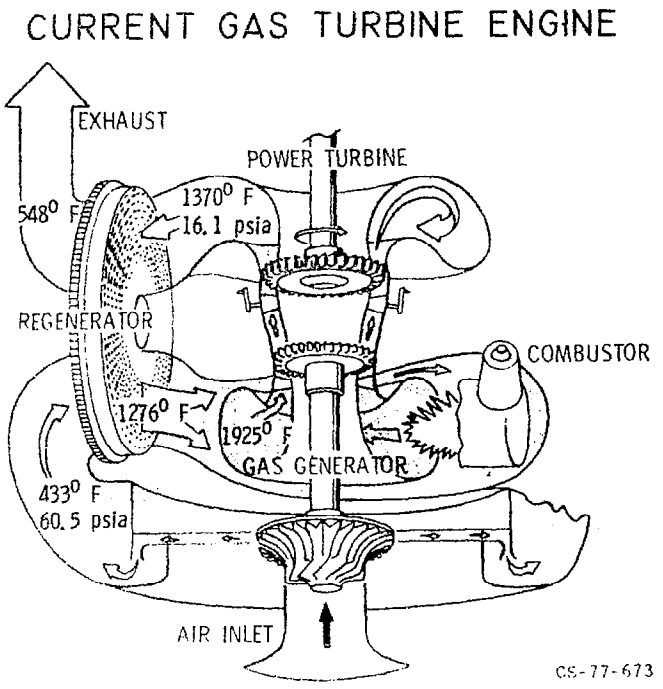

Figure IX-3.

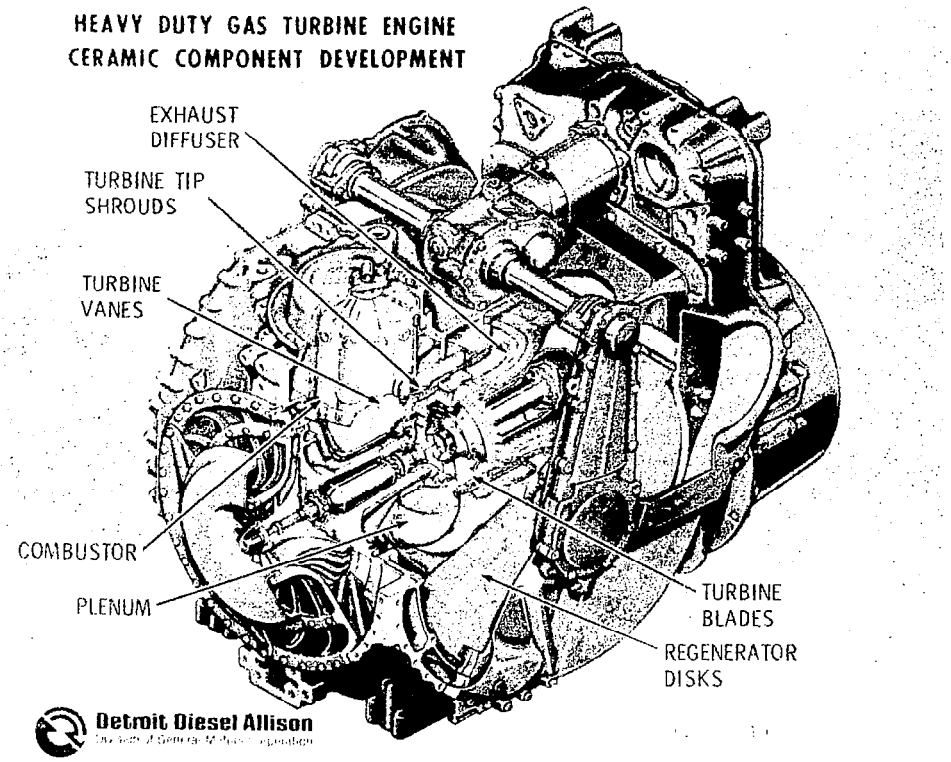

Figure IX-4.

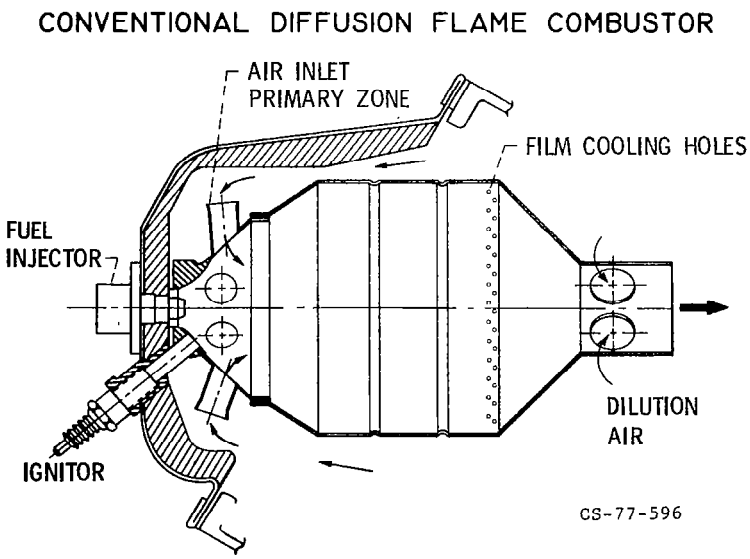

Figure IX-5.

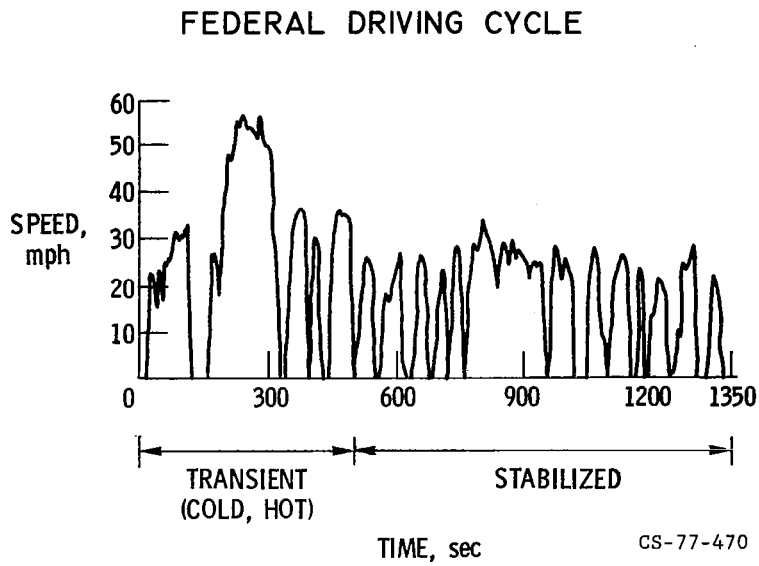

Figure IX-6.

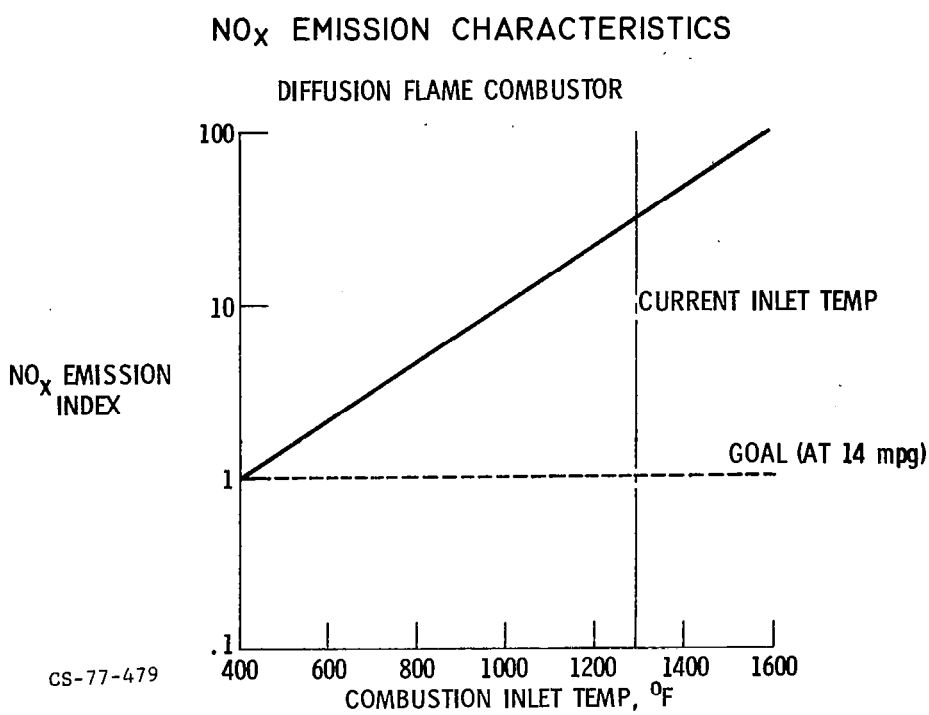

Figure IX-7.

SCHEMATIC OF PREMIX COMBUSTOR

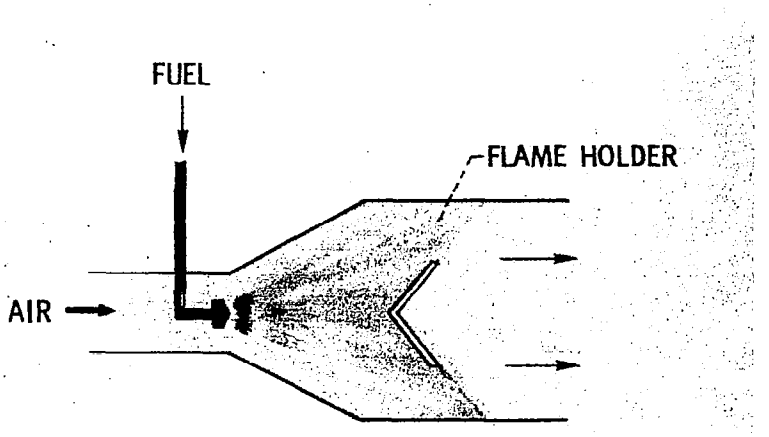

Figure IX-8.

NO_x EMISSION CHARACTERISTICS

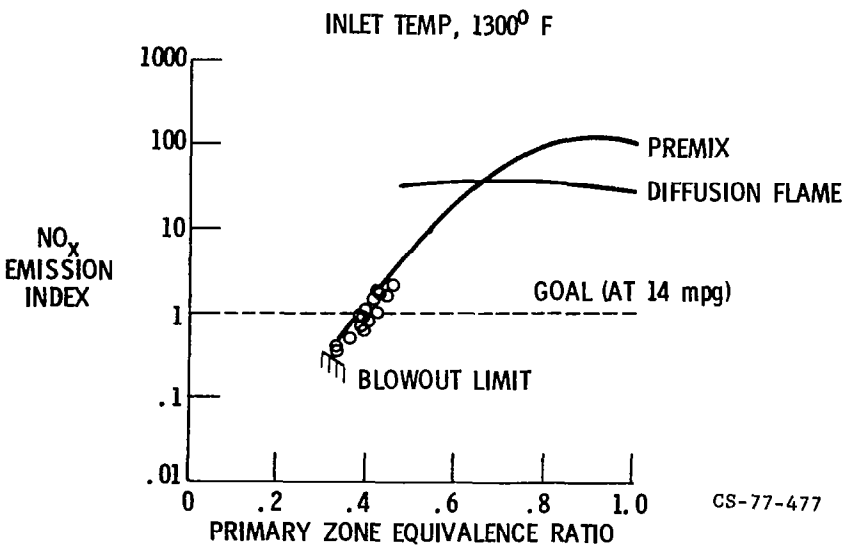

Figure IX-9.

COMBUSTOR CONCEPTS

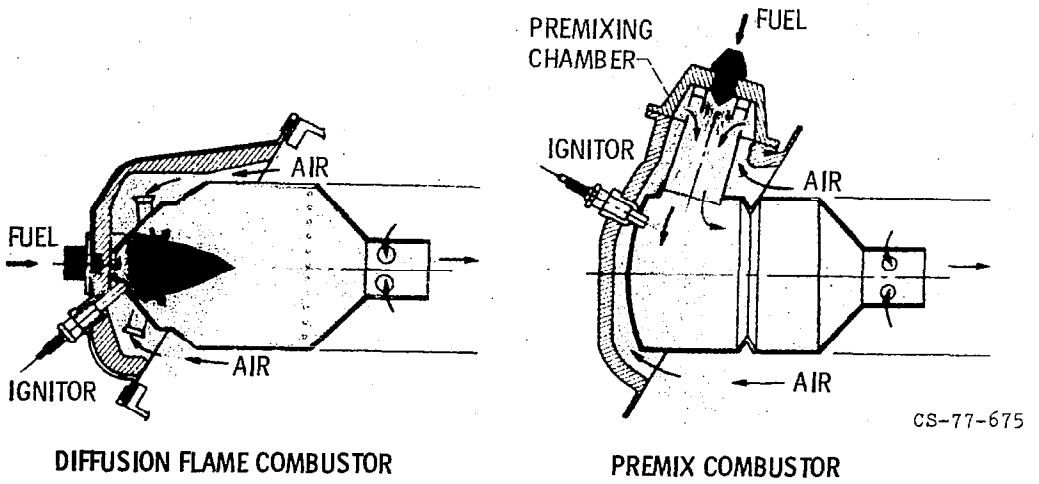

Figure IX-10.

SCHEMATIC OF CATALYTIC COMBUSTOR

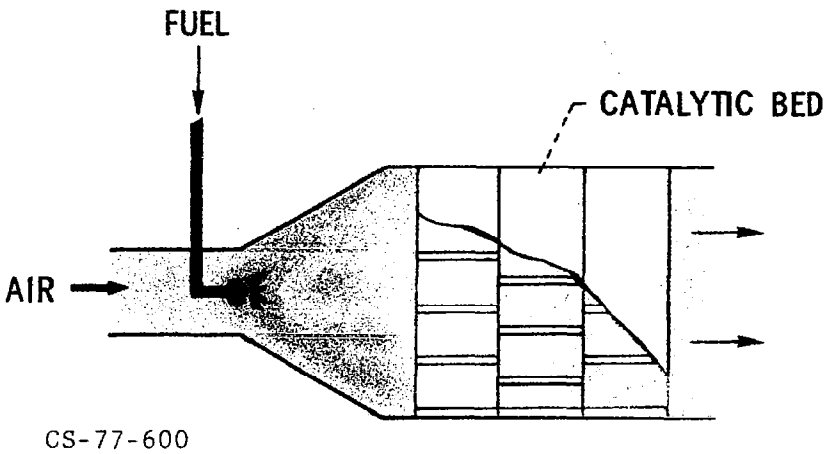

Figure IX-11.

RESEARCH CATALYTIC COMBUSTOR

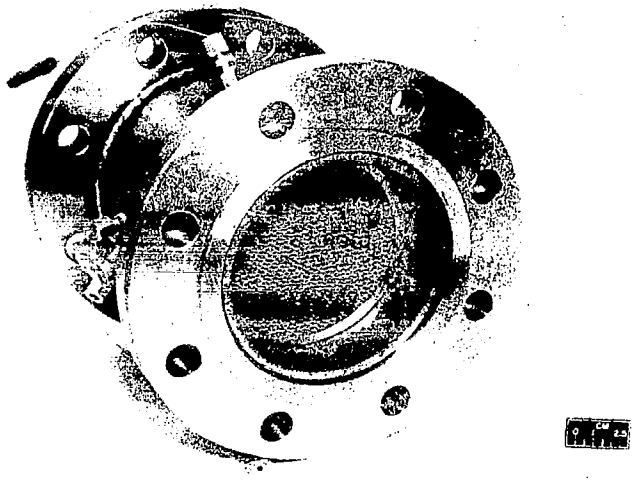

Figure IX-12.

CATALYTIC SUBSTRATE

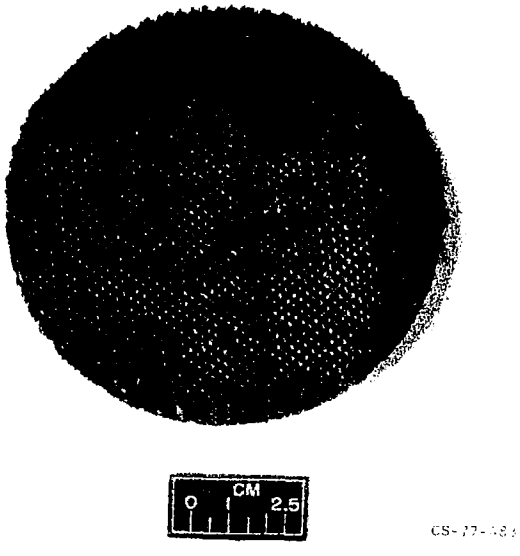

Figure IX-13.

NO_X EMISSION CHARACTERISTICS

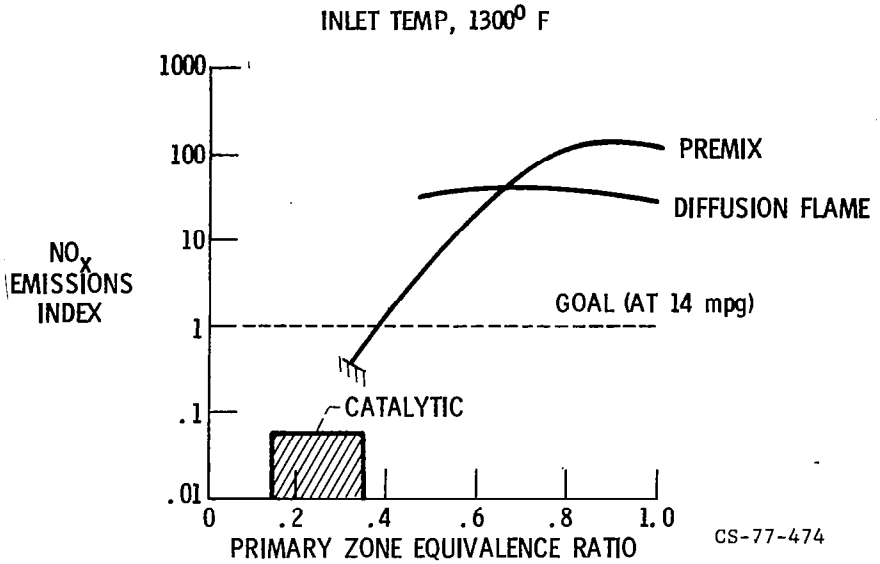

Figure IX-14.

COMBUSTOR CONCEPTS

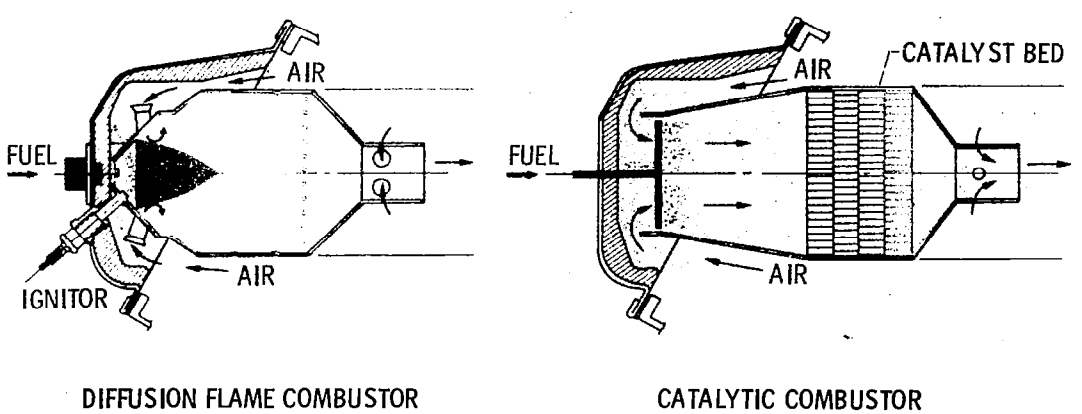

Figure IX-15.

CS-77-676

SCHEMATIC OF SURFACE COMBUSTOR

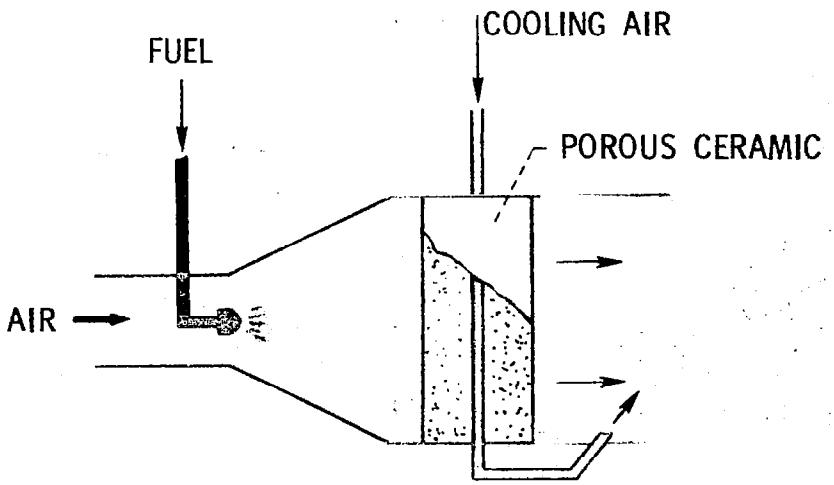

CS-77-599

Figure IX-16.

SURFACE COMBUSTION FLAME

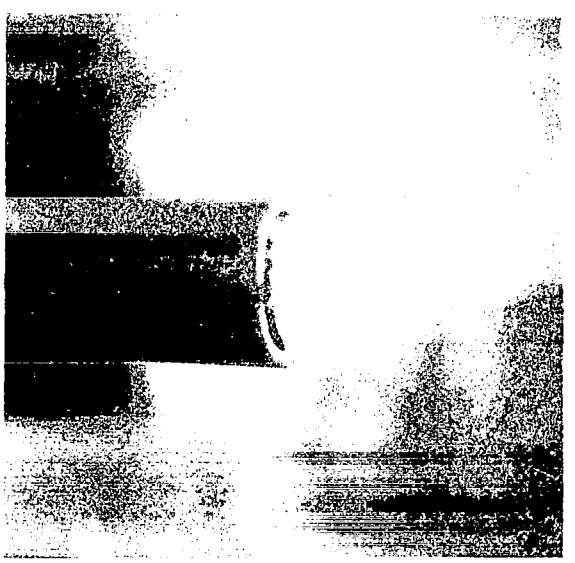

CS-77-597

Figure IX-17.

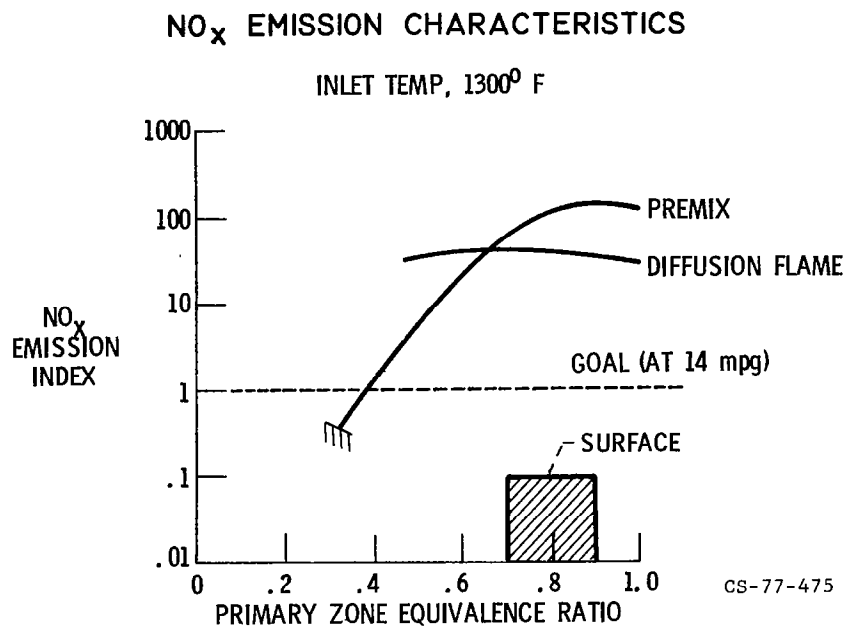

Figure IX-18.

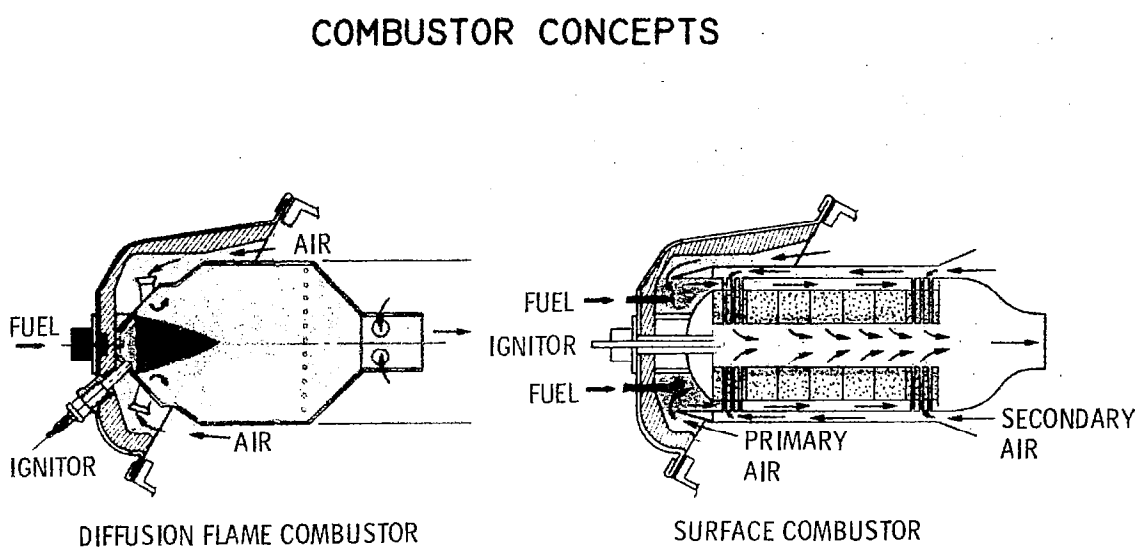

Figure IX-19.

CS-77-674

SCHEMATIC OF CERAMIC COMBUSTOR ELEMENT

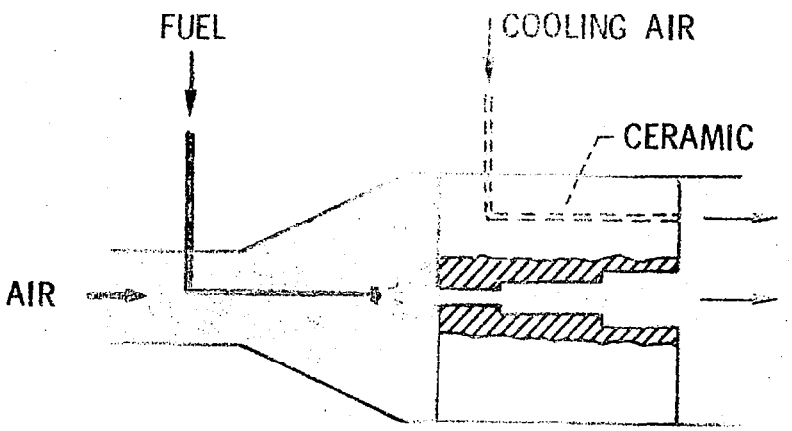

Figure IX-20.

FLAME IN CERAMIC ELEMENT

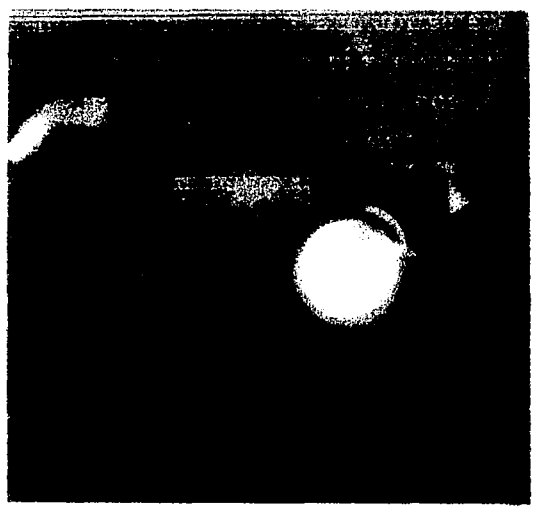

Figure IX-21.

NO_x EMISSION CHARACTERISTICS

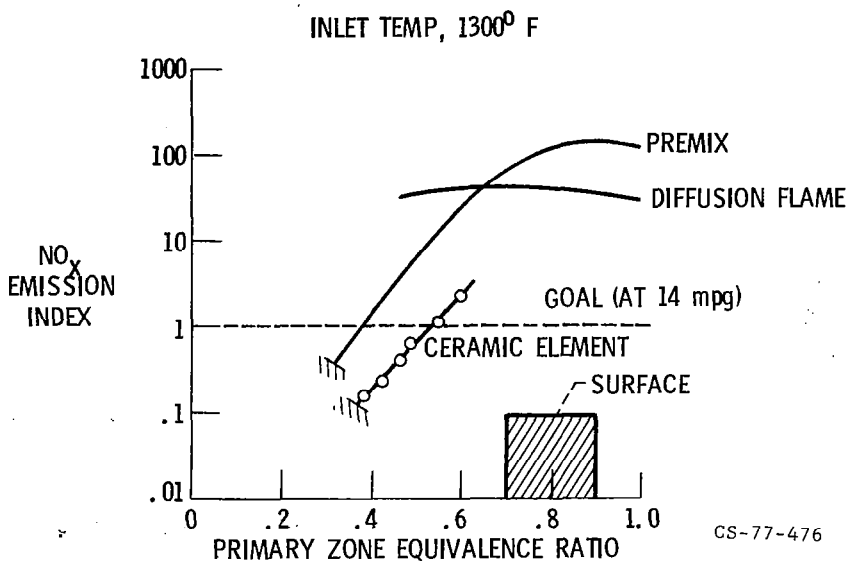

Figure IX-22.

COMBUSTOR CONCEPTS

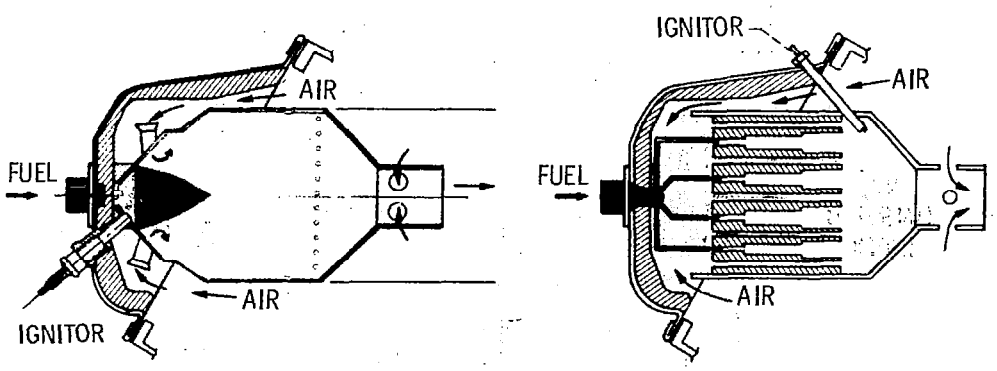

DIFFUSION FLAME COMBUSTOR

CERAMIC MULTI-ELEMENT COMBUSTOR

Figure IX-23.

CS-77-677

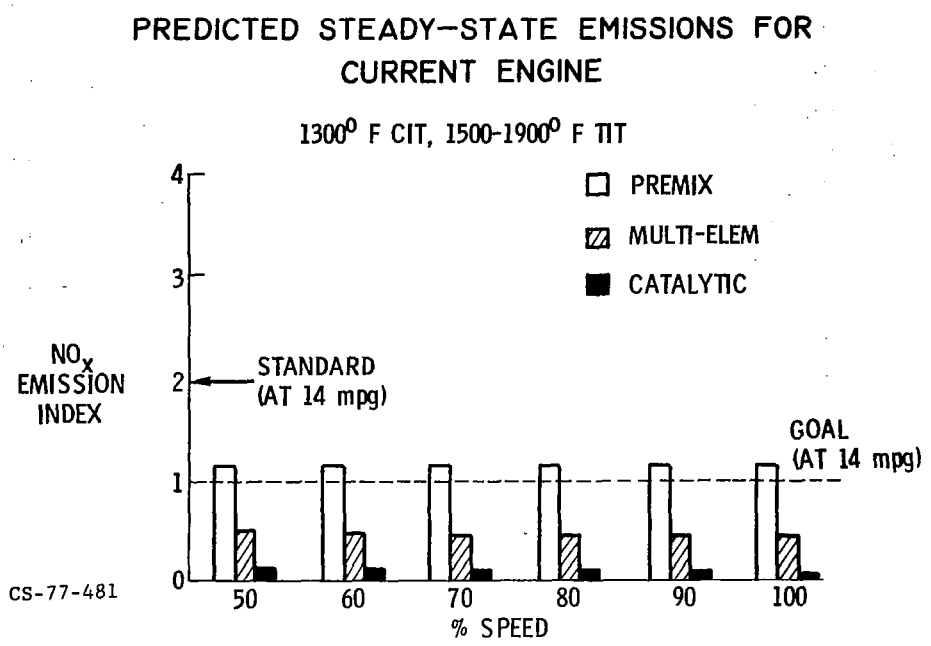

Figure IX-24.

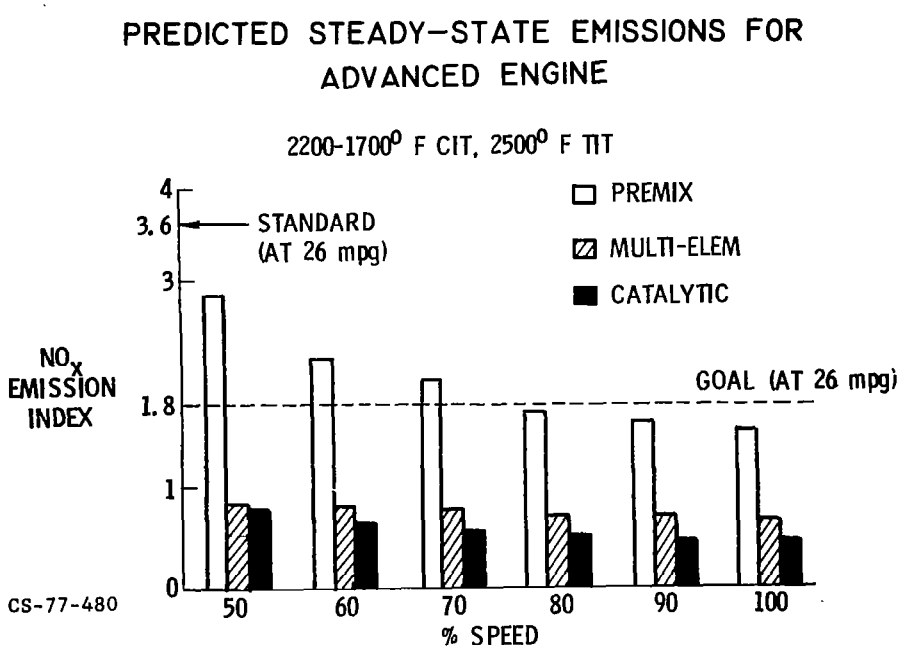

Figure IX-25.

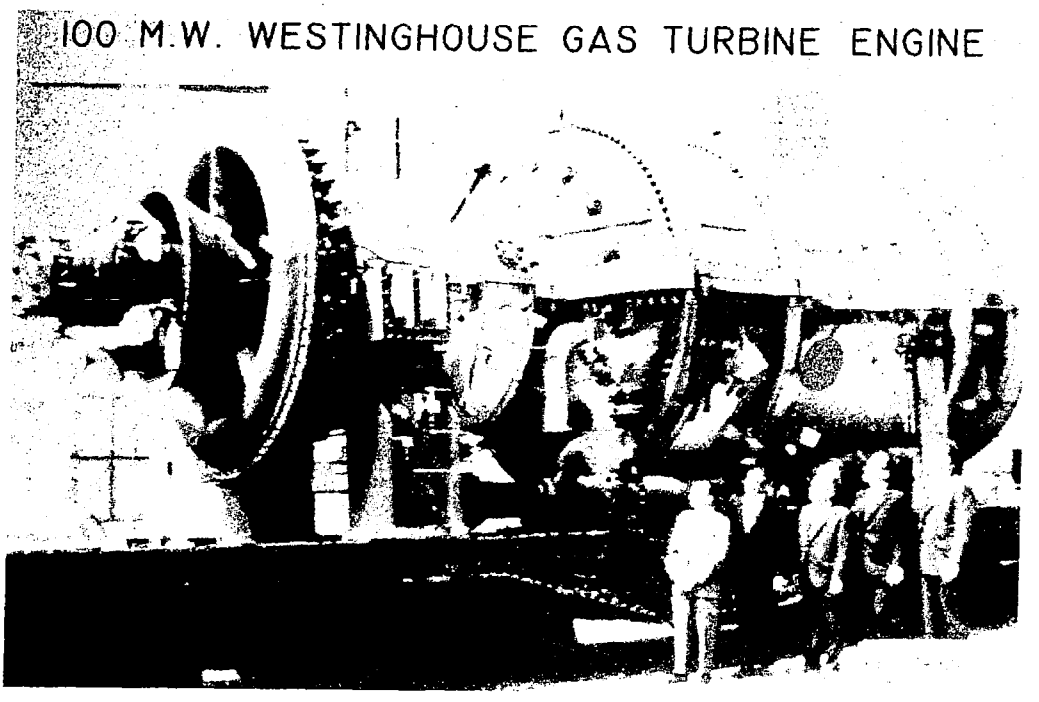

Figure IX-26.

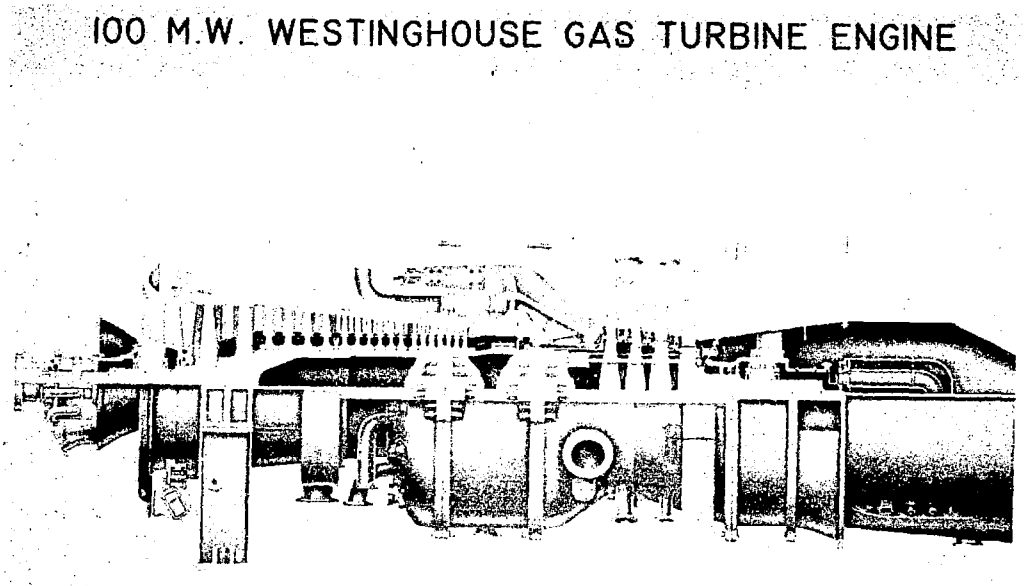

Figure IX-27.

CONVENTIONAL DIFFUSION FLAME COMBUSTOR

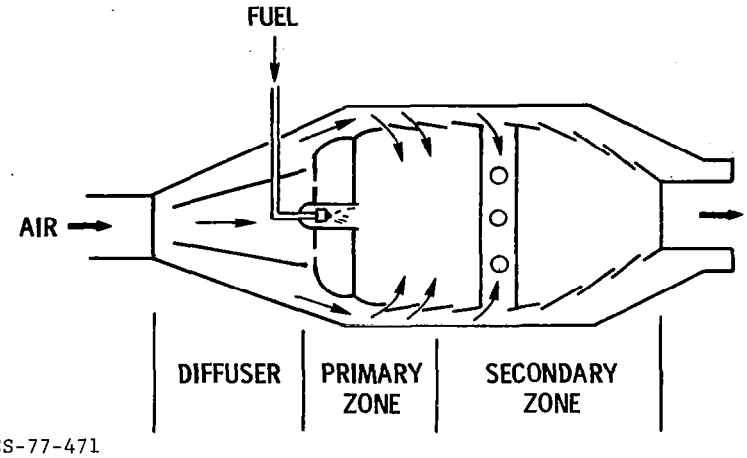

CS-77-471

Figure IX-28.

EMISSION REDUCTION WITH WATER INJECTION

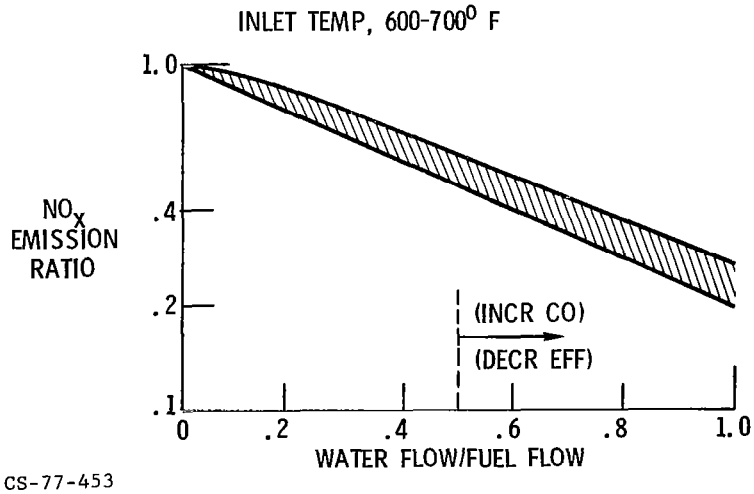

CS-77-453

Figure IX-29.

SCHEMATIC OF TEST COMBUSTOR

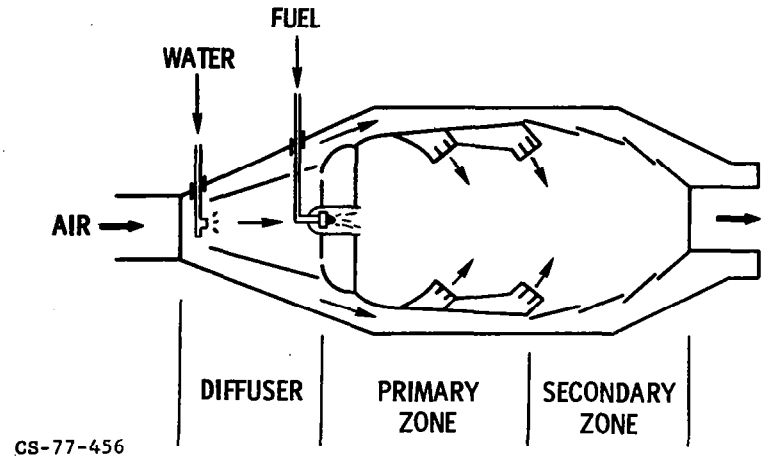

Figure IX-30.

NO_X EMISSION CHARACTERISTICS

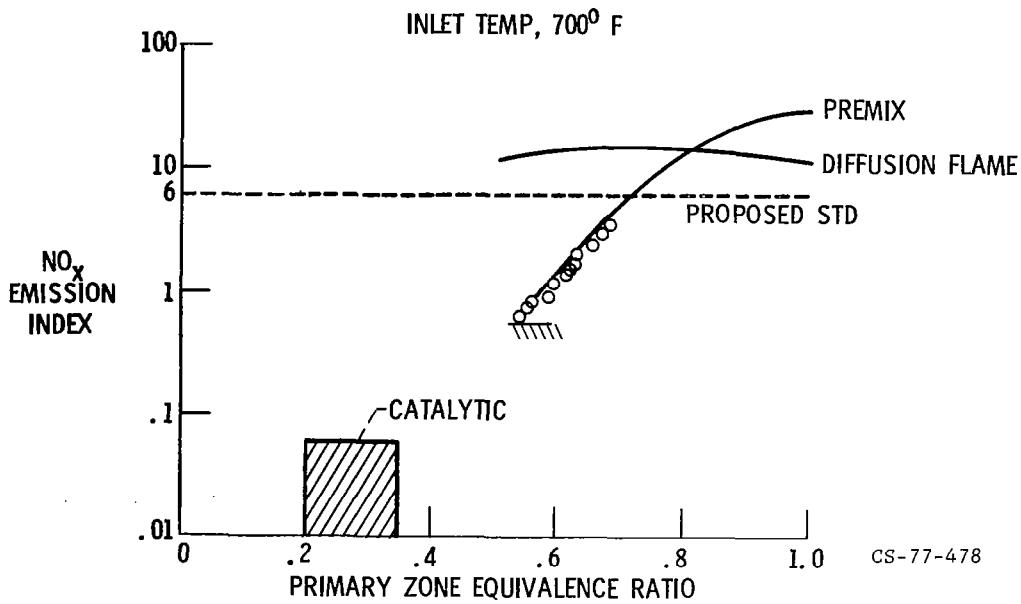

Figure IX-31.

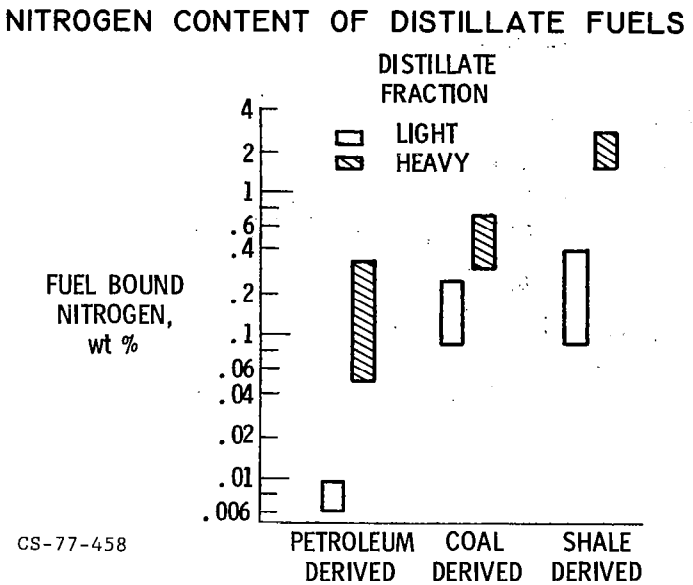

Figure IX-32.

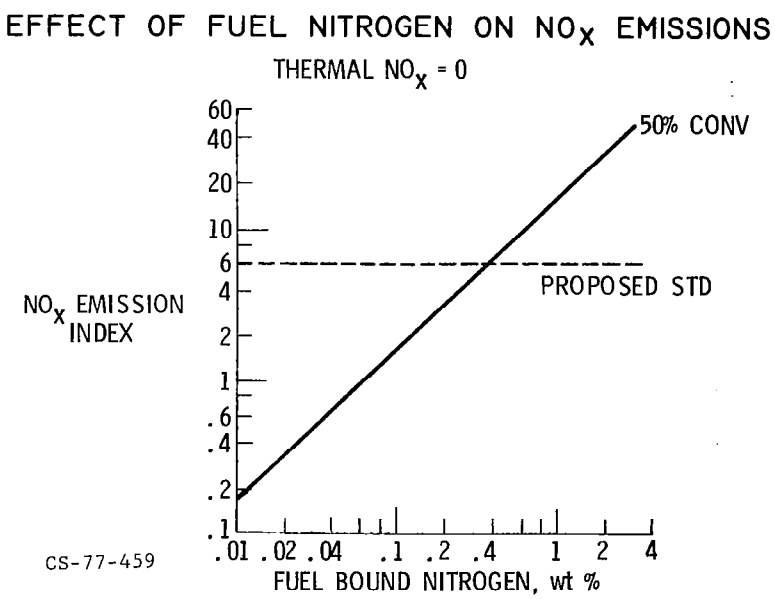

Figure IX-33.

ZONED COMBUSTOR CONCEPT

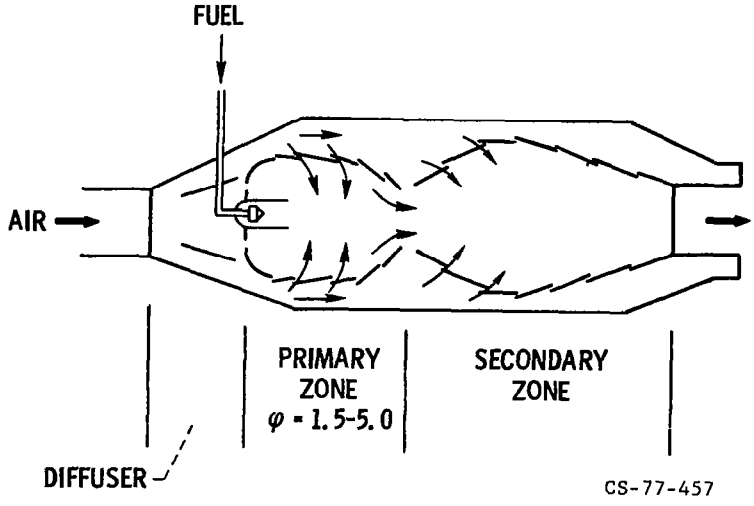

Figure IX-34.