CORE
Metadata, citation and similar papers at core.ac.uk
Provided by NASA Technical Reports Server

NATIONAL AERONAUTICS AND SPACE ADMINISTRATION
WASHINGTON, D.C. 20546

APR 28 1975

REPLY TO ATTN OF: GP

TO: KSI/Scientific & Technical Information Division
Attn: Miss Winnie M. Morgan

FROM: GP/Office of Assistant General Counsel for Patent Matters

SUBJECT: Announcement of NASA-Owned U.S. Patents in STAR

In accordance with the procedures agreed upon by Code GP and Code KSI, the attached NASA-owned U.S. Patent is being forwarded for abstracting and announcement in NASA STAR.

The following information is provided:

U.S. Patent No. : 3,875,500

Government or Corporate Employee : ① ~~NASA~~ US Government ② ③ ④ Sperry Rand Corp., Huntsville, AL

Supplementary Corporate Source (if applicable) : ~

NASA Patent Case No. : MFS-22,671-1

NOTE - If this patent covers an invention made by a corporate employee of a NASA Contractor, the following is applicable:

YES [X] NO [ ]

Pursuant to Section 305(a) of the National Aeronautics and Space Act, the name of the Administrator of NASA appears on the first page of the patent; however, the name of the actual inventor (author) appears at the heading of column No. 1 of the Specification, following the words "...with respect to an invention of ..."

Bonnie L. Woerner

Bonnie L. Woerner
Enclosure

Pull N74-13146

(NASA-Case-MFS-22671-1) PSEUDO-NOISE TEST SET FOR COMMUNICATION SYSTEM EVALUATION Patent (NASA) 6 p CSCL 14B
N75-21582
Unclas
00/35 18777

APR 1975
RECEIVED
NASA STI FACILITY
INPUT BRANCH

MFS-22,671-1

United States Patent [19]

Fletcher et al.

[11] **3,875,500**

[45] **Apr. 1, 1975**

[54] **PSEUDO-NOISE TEST SET FOR COMMUNICATION SYSTEM EVALUATION**

[76] Inventors: **James C. Fletcher**, Administrator of the National Aeronautics and Space Administration with respect to an invention of; **Gabriel R. Wallace; William E. Salter; Glenn D. Weathers**, all of Huntsville, Ala.; **Sidney S. Gussow**, Palm Bay, Fla.

[22] Filed: **Nov. 28, 1973**

[21] Appl. No.: **419,831**

[52] **U.S. Cl.** ..... **324/57 PS**, 178/69 A, 235/181, 324/77 H, 325/67

[51] **Int. Cl.** **G01r 27/00**

[58] **Field of Search** ..... 324/57 PS, 57 N, 77 H; 235/181; 325/67; 178/69 A

[56] **References Cited**

UNITED STATES PATENTS

3,399,299	8/1968	Nichols	235/181 X
3,444,360	5/1969	Swan	235/181 X
3,694,643	9/1972	Smith	324/57 PS X
3,718,813	2/1973	Williams, Jr. et al.	324/57 PS X

Primary Examiner—Stanley T. Krawczewicz

Attorney, Agent, or Firm—George J. Porter; L. D. Wofford, Jr.; John R. Manning

[57] **ABSTRACT**

A test set for communications systems includes a pseudo-noise sequence generator providing a test signal which is fed to a pair of signal channels. The first channel includes a spectrum shaping filter and a conditioning amplifier. The second channel includes a variable delay circuit, a spectrum shaping filter matched to the first filter, and an amplifier. The output of the first channel is applied to the system under test. The output of the system and the output of the second channel are compared to determine the degree of distortion suffered by the test signal due to the communications system.

9 Claims, 5 Drawing Figures

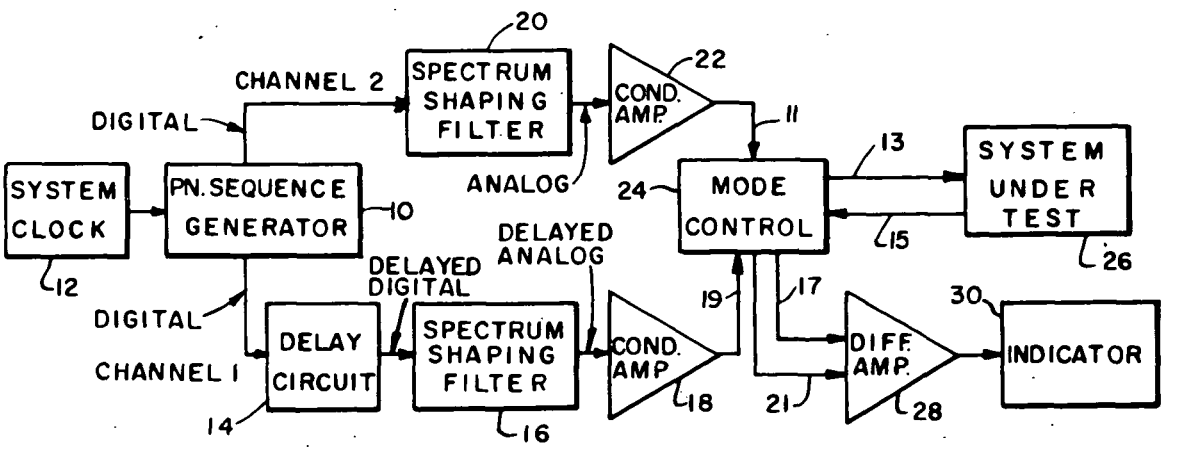

FIG. 1.

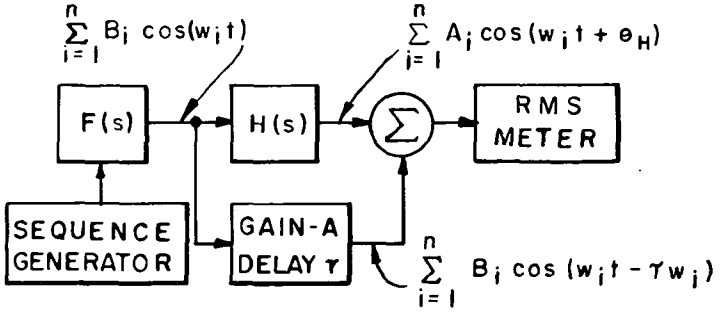

FIG. 2.

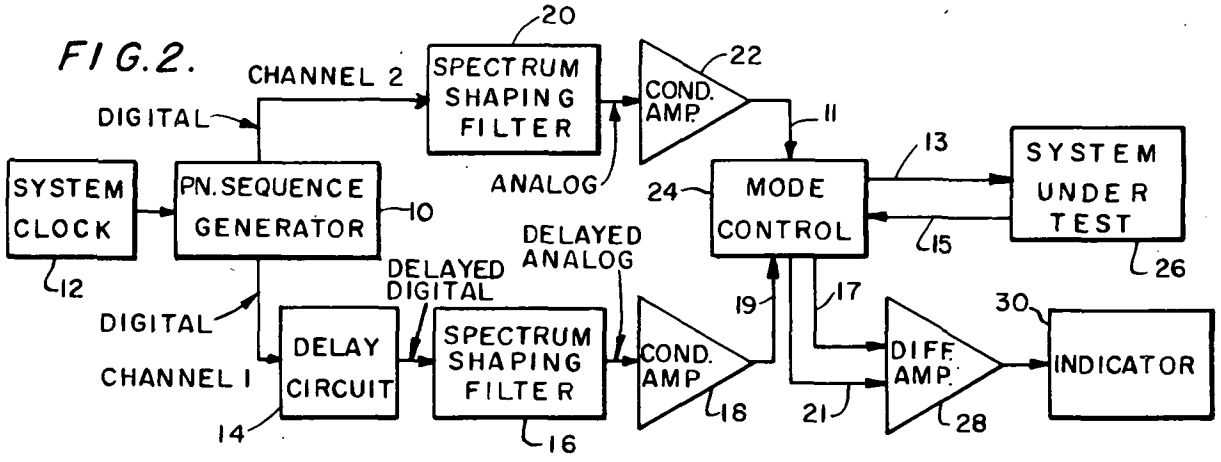

FIG. 3A.

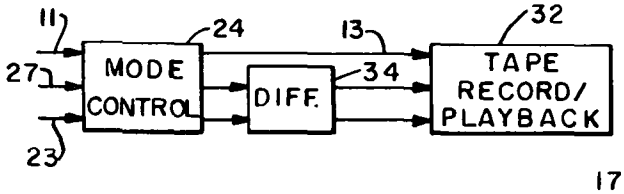

FIG. 3B.

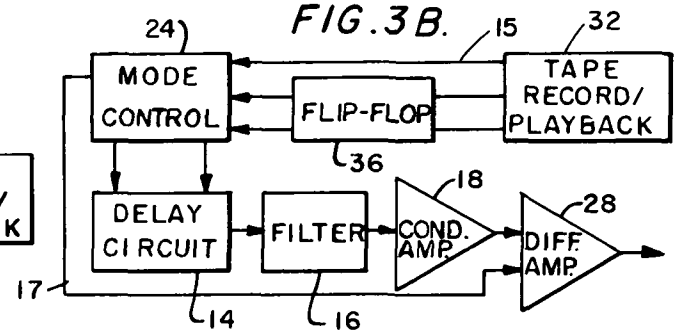

FIG. 4.

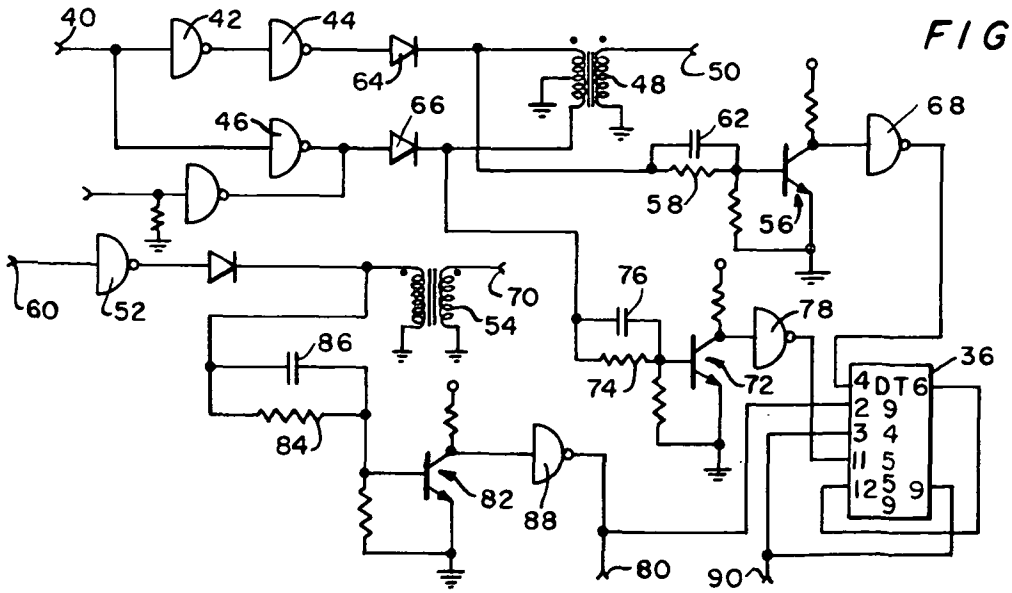

PSEUDO-NOISE TEST SET FOR COMMUNICATION SYSTEM EVALUATION

ORIGIN OF THE INVENTION

The invention described herein was made in the performance of work under a NASA contract and is subject to the provisions of Section 305 of the National Aeronautics and Space Act of 1958, Public Law 85-568 (72 Stat. 435; 42 U.S.C. 2457).

BACKGROUND OF THE INVENTION

The present invention relates generally to test sets for communications systems, and more particularly to such test sets which utilize a pseudo-noise sequence generator to generate the test signal, apply the signal to a communications system, and which compare the system output to the test signal.

Until recently, the usual practice in end-to-end testing of communication systems has been to feed simple, deterministic signals into the system being tested and note the response. The response was then compared with a delayed and amplitude scaled version of the input signal to enable one to determine the distortion caused by the system and, thus, establish a system figure of merit. Unfortunately, most communication systems experience complex input signals and true simulations of system inputs are difficult to obtain. Even with the approximation of these complex signals (for instance, the sum of a number of independent sine waves), the deterministic approach has often proven unacceptable. Usually the number of component signals were inadequate to truly simulate the normal system input. As a result, beatfrequencies or harmonics effects were often missed and the true system performance was not evaluated. To overcome this deficiency, band-limited noise (usually limited to the same operational bandwidth as the tested system) is now often used as a test signal and represents a very general approach to communication system performance evaluation. Yet, while band-limited noise is an excellent tool with which to simulate realistic data conditions, it has proven difficult to uniformly delay, thereby making valid system input/output comparisons difficult to accomplish.

There are two basic ways to test a system utilizing band-limited noise as a test signal — digital and analog. With the digital approach, band-limited noise is fed into a test system and the output monitored. The system input is sampled and digitized (thereby the digital notation). These digitized samples are compared with digitized samples of the test system output yielding mean square values of the distortion introduced. Constant gain and average delay factors are compensated so that they do not contribute to the distortion introduced by the system being tested since these factors are not usually considered as errors. There are two primary advantages of such a scheme. A complex test signal is used that is similar to the expected operational input spectrum, and all operations after sampling are digital. The primary disadvantages are that quantizing errors exist and that the effects of system spikes, such as FM "clicks," are often still missed.

In the analog system approach, band-limited noise is fed into a test system. The system output is compared on an RMS basis with a delayed and scaled version of the system input. The obvious advantages are that the equipment is compact and relatively simple to build.

The largest disadvantage is the difficulty in delaying the complex input without distortion.

SUMMARY OF THE INVENTION

The pseudo-noise (PN) test set which comprises the present invention provides a reliable, operationally simple unit which will allow the previously mentioned analog RMS end-to-end error measurement of most communication systems to be easily performed. It also provides a band-limited pseudorandom noise as an input, thereby escaping the disadvantages of most deterministic signals while retaining the advantages of using true band-limited noise. The test set provides both real-time and record/playback systems testing capabilities for measuring RMS error, system time delay, correlation function, and system impulse response (assuming a linear system).

The test set uses filtered pseudorandom data and an analog error measuring approach to provide near-Gaussian, wideband data as a test signal which exercises the entire designed spectrum of the communication system under test.

The digital output signal of a PN sequence generator is fed to two signal channels. In the first channel, the signal is delayed and then fed into a spectrum shaping filter to provide a delayed analog signal. It is important to note that the delay is introduced into the signal prior to the filter, while the signal is in digital form. This technique avoids the problems noted above which are associated with delaying analog signals. The delayed analog signal is then fed to an amplifier having an adjustable gain. In the second channel, the signal is fed to a spectrum shaping filter very closely matched to the filter in the first channel to provide an analog signal, which is fed into another adjustable gain amplifier. The amplifier output is fed into the system under test. The system output is then compared to the delayed signal from the first channel, the difference being indicative of the system operation characteristics. The delay introduced into the signal in the first channel is variable and, in the real-time and playback modes of operation, is adjusted to provide the minimum difference indication from the comparator device.

The system under test may be a real-time system, such as communications link, or it may be a non-real-time system, such as a tape recorder system.

Therefore, it is an object of the present invention to provide a communications test set for measuring the operating characteristics of both real-time and non-real-time systems.

It is another object of the present invention to provide a test set for measuring very accurately the RMS error of a communications system.

It is a further object of the present invention to provide a test set for communications systems which is reliable, operationally simple and extremely accurate.

It is still another object of the present invention to provide a communications test set which measures RMS error, system time delay, correlation function, and system impulse response.

BRIEF DESCRIPTION OF THE DRAWING

Other objects, advantages, and novel features of the invention will become apparent from the following detailed description of the invention when considered in conjunction with the accompanying drawings, in which:

FIG. 1 shows a functional block diagram of the PN test arrangement;

FIG. 2 shows the PN test set block diagram;

FIGS. 3A and 3B show signal flow diagrams for the record and playback modes; and

FIG. 4 is a schematic diagram of the record/playback interface circuitry.

DESCRIPTION OF THE PREFERRED EMBODIMENT

Correctly defined noise signals give a good approximation of the data signals handled by communication systems. The noise signals must be stationary to assure that the measurements are repeatable. Noise can be defined by two unrelated parameters, power spectral density and the amplitude probability density function.

Power spectral density (PSD) describes how the energy in a noise signal is distributed in frequency. Generally, the noise power spectral density, as a function of frequency, can take almost any shape; however, the most common specification is that the power spectral density be constant with frequency. This describes "white" noise.

Probability density function (PDF) of a noise signal is defined as that function which, when integrated over an interval (X_1,X_2), gives the probability that the noise amplitude, X_N, lies in the interval (X_1,X_2). Specifically,

$$P(X_1 \leq X_n \leq X_2) = \int_{X_1}^{X_2} p(x)dx \ , \qquad (1)$$

and $p(x)$ is the amplitude probability density function, PDF.

True noise data signals are difficult to delay without introducing appreciable distortion. This problem is eliminated by using digitally generated pseudorandom noise signals. PN signals produced by the test set are, in fact, not random but are completely definitive and repetitive. These PN signals closely resemble true random noise signals from both the power spectral density and probability density function aspects.

A pseudorandom binary sequence can be generated by a shift register with an input dependent on feedback from certain register stages. The maximal length (ML) PN binary sequence is of length L and contains $2^N - 1$ bits before repetition of the sequence (where N is the number of register stages).

An important characteristic of pseudorandom sequences is the correlation property. If a binary sequence is pseudorandom, the correlation function of the sequence, and the sequence shifted with respect to itself, is constant for all shifts other than shifts of an integer number of sequence periods. Specifically, if vector A is a sequence $(a_1, a_2, \ldots, a_n)$, and B is a shifted version of this same sequence (with j shifts), then the correlation function (R) is:

$$R(j) = -\frac{1}{L}\sum_{i=1}^{L} (a_i \oplus b_i) \qquad (2)$$

where the $\oplus$ indicates modulo-2 addition. If the sequence is pseudorandom,

$R(j = O) = 1,$

$R(O < j < N) = 1/L, \quad (3)$

$R(j = L) = 1$ where $L = 2^N - 1$.

This correlation property of a pseudorandom sequence is particularly important because it verifies that the signal generation approximates a random process.

The power spectrum envelope of a PN sequence is a $(\sin X/X)^2$ curve with the first zero occurring at the sequence clock frequency (ω_k). If the PN sequence is lowpass filtered, with the cutoff frequency (ω_o) restrained to $\omega_o < \omega_k 115$, then the PDF of the resultant analog signal is approximately Gaussian.

Noise signals generated by lowpass filtering of ML PN sequences are partially described by the cutoff frequency and order of the filter. The spectrum amplitude is approximately flat for $\omega < \omega_o$, the envelope is down three decibels (dB) at ω_o. At frequencies greater than ω_o, the envelope rolls off at a rate of 6 m dB/octave (where m is the data filter order). The spectrum is not continuous but consists of closely spaced spectral lines $[\Delta\omega = \omega_k/(2^N - 1)]$.

FIG. 1 is a functional block diagram of the PN test arrangement. The filtered PN sequence is represented as a sum of sinusoids,

$$\sum_{i=1}^{\infty} B_i \cos(\omega_i t) \ . \qquad (4)$$

The filtered sequence is passed through the system with transfer function H(s), and the system output is

$$\sum_{i=1}^{\infty} A_i \cos(\omega_i t + \theta_H) \ . \qquad (5)$$

A scaled and delayed version of the original analog signal is

$$\sum_{i=1}^{\infty} B_i \cos(\omega_i t + \tau\omega_i) \ . \qquad (6)$$

The difference between these two complex waveforms is evaluated on an RMS basis by the PN test set to give a figure of merit relating to the system's ability to transfer the complex pseudonoise data signals.

Referring now to FIG. 2, a PN sequence generator **10**, such as an ML, 20 stage shift register with feedback from taps **17** and **20**, is timed by a system clock **12**. The clock, which can be an astable multivibrator, is shown as being connected only to the generator **10** for the sake of simplicity; however, it is actually connected to various other circuits throughout the test set to provide timing pulses in the conventional manner. The output of the sequence generator **10** is applied to a pair of signal channels. The first channel includes delay circuit **14**, a spectrum shaping filter **16**, and a conditioning amplifier **18**. The second channel includes a spectrum shaping filter **20** and a conditioning amplifier **22**.

The delay circuit uses an incrementally controlled NAND gate matrix for coarse delay selection and a clock vernier for fine delay control. The clock vernier is an adjustable monostable, multivibrator utilizing standard integrated circuitry and discrete, external capacitors. While the delay circuit itself is not unique, its use at this point in the test set is important. The conventional method of adjusting the delay of the test signal to compensate for the average delay of the unit

under test is to vary the clock frequency of the data generator until a null is reached. The delay is then a specific number of bits. However, this method is unacceptable with many generators since charging the ratio of the clock frequency to the data shaping filter cutoff frequency changes the statistics of the test signal. In order to keep the ratio within a certain narrow range and ensure near-Gaussian statistics, it is necessary to have a constant clock frequency. Without changing the clock frequency, only a null to within ± 1/2 bit period of the clock frequency can be achieved unless a vernier time delay adjustment is provided. By using the monostable multivibrator, the delay can be " coarse" nulled to within ± 1/2 bit period and then nulled to within a small fraction of a bit period by the vernier adjust, which is continuous within a bit period. This permits the effects of the average time delay of the unit under test to be removed and results in lower, more accurate RMS error figures. This is achieved without changing the clock frequency or test signal statistics.

The spectrum shaping filters **16** and **20** are Butterworth active lowpass filters matched to within 0.05 percent. The achievement of this level of matching required a sensitivity analysis of the circuit design, careful attention to component selection, and precise tuning. Five interchangeable plug-in filter sets have been constructed. Four are Butterworth third-order lowpass filters with 3 dB cutoff frequencies at 400 Hz, 500 Hz, 1,000 Hz, and 2,000 Hz, and one is a first-order lowpass with 3 dB cutoff at 2,000 Hz. The cutoff frequencies were selected to provide near-Gaussian test signals with a clock frequency of 45 KHz. Thus, the clock frequency is substantially more than 15 times the cutoff frequency of any of the filters. The filters must be very closely matched because any differences in the signals due to filter mismatch will show up as system distortion, thus causing inaccurate measurements.

Conditioning amplifiers **18** and **22** are conventional amplifiers with gain and DC offset potentiometers.

A mode control **24** is used to provide proper signal paths for the real-time, record, or playback modes. Mode control **24** is a three-position switch with numerous contacts for providing the necessary connections. Its function will be explained as each mode is examined below.

The output signal of amplifier **22** is applied, through the mode control, to the system under test, **26.** The system output is applied to one input of difference amplifier **28,** which also receives the output of amplifier **18** at its outer input. The difference amplifier output is applied to indicator **30.**

The operation of the test set has been explained generally by FIG. 1 and the above description of FIG. **2.** In the real-time mode the set is connected as in FIG. **2.** The test signal on line **11** is directed through mode control **24** to line **13** and applied to system **26.** The system output signal on line **15** is directed through mode control **24** to line **17** and applied to difference amplifier **28.** The delayed analog signal on line **19,** which is to be compared with the system output signal, is applied to difference amplifier **28** through mode control **24** and line **21.**

FIGS. 3A and 3B show the signal flow diagrams for the record and playback modes, respectively. The tape record/playback interface has three basic signals to handle; the test signal, or filtered sequence, present on line **11**; the clock signal, present on line **27**; and the unfiltered PN sequence from generator **10** present on line **23.** As described above, the filtered sequence is analog and is the signal the distortion of which will be used to measure the system distortion. The clock signal and PN sequence are both digital. The filtered sequence passes through mode control **24** directly to be recorded on the tape. The clock signal and PN sequence are individually differentiated by differentiator **34** and recorded separately on two other tracks of the tape. These signals are differentiated so that only the times of crossings are recorded, thereby fitting more easily into the available bandwidth of the tape recorder system.

In the playback mode, the system output signal on line **15** (the playback of the recorded filtered sequence) passed through mode control **24** to difference amplifier **28** on line **17.** The recorded differentiated clock signal and PN sequence are played back and applied to flip-flop **36.** The clock signal triggers the flip-flop to reconstruct the PN sequence. This process removes any removable time-base variations (i.e., wow and flutter) due to the tape recorder from the RMS error figure since the time-base errors introduced on the analog recorded signal are exactly compensated for by the same variations in the clock and PN sequence. The reconstructed clock and PN sequence are passed through mode control **24** to delay circuit **14** where the PN sequence is delayed, filtered, amplified and applied to difference amplifier **28** as the reference signal.

FIG. **4** shows the tape record/playback interface in schematic diagram form. Terminal **40** receives the unfiltered PN sequence during the record mode. Integrated circuits (IC) **42,44** and **46** provide signal shaping and inverting, while the inductance of transformer **48,** along with circuit capacitance, provides the differentiating function. The differentiated PN sequence is applied to the tape recorder from terminal **50.** The clock signal appears at terminal **60,** passes through IC **52** and is differentiated by circuit capacitance and the inductance of transformer **54.** The differentiated clock signal is applied to the tape recorder via terminal **70.**

In the playback mode, the played-back differentiated PN sequence enters the interface at terminal **50,** and passes through transformer **48.** Signals of one polarity are applied to the base of transistor **56** through resistor **58** and capacitor **62.** Diodes **64** and **66** isolate the played-back differentiated PN sequence from terminal **40,** which is disabled during playback mode. The amplified signal from transistor **56** passes through IC **68** to terminal **4** of flip-flop **36.** Signals of the other polarity are applied to the base of transistor **72** through resistor **74** and capacitor **76.** The amplified signal passes through IC **78** to terminal **11** of flip-flop **36.** The replayed differentiated clock signal enters the interface on terminal **70** and is applied to transistor **82** through resistor **84** and capacitor **86.** The signal then passes through IC **88** to terminal **80** and flip-flop **36,** and is now the reconstructed clock signal. The internal clock **10** is disabled during playback mode, and the clock signals from terminal **80** function as the system clock signals during playback mode. These clock signals, applied to terminal **2** of flip-flop **36,** which may be a Fairchild DT 94559, time the flip-flop to reconstruct the PN sequence. The reconstructed PN sequence appears on terminal **90** and is applied to the delay circuit **14.** The delay circuit is used here even though it would appear that both the test and PN sequence signals have the same time delay (both are entered into the system

under test by being recorded on the tape) because of the slight skew between different tracks on the same tape, and because of possible variations in group delays among the recorded channels. The skew and possible group delay differences cause a slight time difference between tracks which is counteracted by the delay circuit.

The operating procedures for obtaining the various system measurements will now be described. To obtain real-time RMS error measurement due to waveform distortion in a communication system, the indicator **30** is a true-reading RMS voltmeter. With the mode control in the proper position, and the set connected to the system, the conditioning amplifier **22** is adjusted to the correct system dynamic range. The gain of conditioning amplifier **18** and the delay adjustment of delay circuit **14** are then adjusted to obtain a minimum reading on the indicator, the minimum reading being the RMS error. To obtain RMS error measurement on the non-real-time system, the procedure is substantially the same except that the gain of amplifier **22** is adjusted in the record mode and the gain of amplifier **18** and the delay of delay circuit **14** are adjusted for a minimum reading during playback.

To measure system average time delay, it is merely necessary to determine the time delay setting of delay circuit **14** when the indicator **30** is at a minimum reading. The test set provides a delayed clock pulse from the delay circuit. An oscilloscope or counter can be used to measure the distance between the negative going edges of the pulses. This provides a measurement of the vernier time delay and is added to the incremental delay setting to obtain total time delay. In general, any way of measuring the time delay when the RMS meter reading is a minimum can be used.

It has been shown that the correlation maximum occurs at the RMS error minimum and that by measuring the system input, output and minimum RMS error, the correlation of the system is obtained in accordance with the following formula,

$$Re_2e_1(\tau) = 1/2\ (e_{1RMS}^2 + e_{2RMS}^2 - e_{RMS}^2)$$

where:

$Re_2e_1(\tau)$ is the correlation;

e_1 is the system input voltage;

e_2 is the system output voltage;

e is the error voltage.

As is well known in the art, for a linear system the impulse response is proportional to the cross-correlation function. Since the system time delay and system correlation function can be determined as described above, the system impulse response can be calculated in the conventional manner.

Obviously, many modifications and variations of the present invention are possible in light of the above teachings. It is therefore to be understood that, within the scope of the appended claims, the invention may be practiced otherwise than as specifically described.

We claim:

1. A test set for testing a communications system comprising:

a clock;

a pseudo-noise sequence generator connected to the output of said clock to provide a digital signal;

a variable delay circuit connected to receive said digital signal and to provide a delayed digital signal;

a first spectrum shaping filter connected to receive said delayed digital signal and to provide a delayed analog signal;

a second spectrum shaping filter connected to receive said digital signal and to provide an analog test signal;

means for connecting said analog test signal to the communications system;

means for comparing two input signals and providing an output signal indicative of the differences in the signals; and

means for connecting the output of said communications system and the delayed analog signal to said comparing means.

2. The test set of claim **1** wherein said first and second spectrum shaping filters are matched, Butterworth third-order lowpass filters.

3. The test set of claim **2** wherein said filters are matched to less than 0.005 percent RMS error.

4. The test set of claim **3** wherein said filters are lowpass filters with a cutoff frequency which is less than one-fifteenth of the clock frequency.

5. The test set of claim **4** wherein:

said clock is an astable multivibrator; and,

said pseudo-noise sequence generator is an ML, 20 stage shift-register with feedback from taps (**17**) and (**20**).

6. The test set of claim **4** wherein:

said clock has an output frequency of 45 KHz; and,

said filters have a cutoff frequency of 1,000 Hz.

7. The test set of claim **4** further including first and second conditioning amplifiers for amplifying the output of said first and second spectrum shaping filters, respectively, said amplifiers including gain and DC offset controls.

8. The test set of claim **4** wherein said delay circuit comprises:

a NAND gate matrix for coarse delay selection; and,

a clock vernier for fine delay control, said vernier including a monostable multivibrator.

9. The test set of claim **4** wherein said comparing means comprises a difference amplifier.

* * * * *