NASA TECH BRIEF

NASA Pasadena Office

Compensating Subreflector for Two-Reflector Antennas — A Concept

The problem:

When the positions of the surface panels of the main reflector of a Cassegrainian tracking antenna are optimized for a 45° elevation, it is found that system gain is degraded at the zenith and horizon positions because the panels are distorted into a new configuration by the redistribution of gravitational forces.

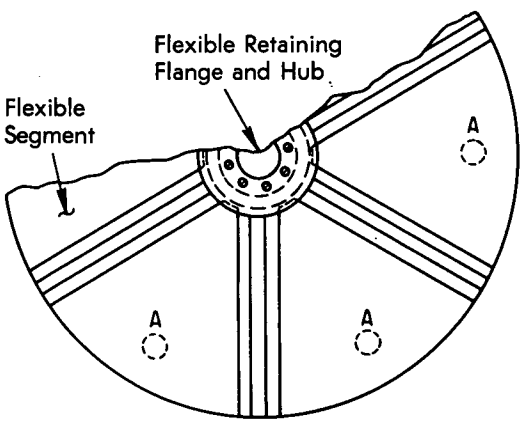

The solution:

The subreflector is segmented into sections, and its surface is then distorted and shaped by mechanical means to compensate for the loss of figure in the main reflector.

How it's done:

The subreflector is constructed so that sliding and pivotal movement of each segment on the center hyperboloidal hub is possible. Each segment is retained on the hub by a flexible retaining flange, and the segments are recessed at the pivot end so that a quasi-continuous surface is maintained after installation of the retaining flange. Separations between segments are covered by thin metal strips in electrical contact with the juxtaposed segments and fitted into recessed areas extending along the edges of the segments to form a quasi-continuous surface between them. The strips are somewhat arcuate to permit a differential movement of the segments of approximately 2.5 mm.

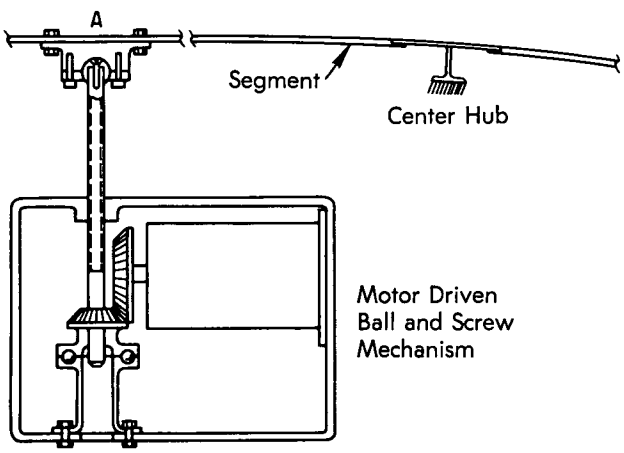

Each segment is moved by an attachment at point A to a ball and jack-screw mechanism that is driven by a reversible electric motor. The segments are adjusted individually as required for maximum antenna gain at any given position. This adjustment can

(continued overleaf)

be aided by prior knowledge of the distortion pattern of the main reflector of the antenna.

The number of segments required in the subreflector are determined by the gravity distortion pattern of the main reflector at zenith and at horizon; for example, if a distortion pattern of six segments is observed or computed, a subreflector with six adjustable segments is sufficient to allow recovery of a large percentage of the gain.

Note:

Requests for further information may be directed to:

Technology Utilization Officer
NASA Pasadena Office
4800 Oak Grove Drive
Pasadena, California 91103
Reference: B72-10093

Patent status:

No patent action is contemplated by NASA.

Source: Dan A. Bathker, M. Smoot Katow, and Philip D. Potter of Caltech/JPL under contract to NASA Pasadena Office

(NPO-11503)