DEVELOPMENT OF WALL-PRESSED IN-PIPE ROBOT FOR CLEANING AND INSPECTION TASKS

A THESIS SUBMITTED IN PARTIAL FULFILLMENT
OF THE REQUIREMENTS FOR THE DEGREE OF

Master of Technology

In

Industrial Design

By

Korra Dileep Kumar
(Roll: 213ID1364)

Department of Industrial Design
National Institute of Technology
Rourkela-769008, Orissa, India
May 2015

DEVELOPMENT OF WALL-PRESSED IN-PIPE ROBOT FOR CLEANING AND INSPECTION TASKS

A THESIS SUBMITTED IN PARTIAL FULFILLMENT
OF THE REQUIREMENTS FOR THE DEGREE OF

Master of Technology

In

Industrial Design

By

Korra Dileep Kumar
(213ID1364)

Under the supervision of

Prof. B.B.V.L. Deepak

Department of Industrial Design
National Institute of Technology
Rourkela-769008, Orissa, India
May 2015

Department of Industrial Design

NATIONAL INSTITUTE OF TECHNOLOGY, ROURKELA

ORISSA, INDIA – 769008

CERTIFICATE

This is to certify that the thesis entitled "***Development Of Wall-Pressed In-Pipe Robot For Cleaning and Inspection tasks*** ", being submitted by **KORRA DILEEP KUMAR**, Roll No. **213ID1364,** to the National Institute of Technology, Rourkela for the award of the degree of ***Master of Technology*** in Industrial Design, is a bona fide record of research work carried out by him under my supervision and guidance.

The candidate has fulfilled all the prescribed requirements.

The thesis, which is based on candidate's own work, has not been submitted elsewhere for the award of a degree.

In my opinion, the thesis is of the standard required for the award of degree of Master of Technology in Industrial Design.

To the best of my knowledge, he bears a good moral character and decent behavior.

Supervisor

Prof. (Dr).B.B.V.L. DEEPAK,

Assistant Professor, Department of Industrial Design

NATIONAL INSTITUTE OF TECHNOLOGY

Rourkela-769 008 (INDIA)

ACKNOWLEDGEMENT

For each and every new activity in the world, the human being needs to learn or observe from somewhere else. The capacity of learning is the gift of GOD. To increase the capacity of learning and gaining the knowledge is the gift of GURU or Mentor. That is why we chanted in Sanskrit "*Guru Brahma Guru Vishnu Guru Devo Maheswara, Guru Sakshat Param Brahma Tashmey Shree Guruve Namoh*". That means the Guru or Mentor is the path to your destination.

The author first expresses his heartiest gratitude to his guide and supervisor *Prof. (Dr.) B.B.V.L Deepak, Assistant* Professor of Industrial Design Department for his valuable and enthusiastic guidance, help and encouragement during the course of the present research work. The successful and timely completion of the research work is due to his constant inspiration and extraordinary vision. The author fails to express his appreciation to him.

The author is thankful to *Prof. (Dr.) Bibhuti Bhusan Biswal*, Professor and Head of the Department of Industrial Design and *Prof. Mohammed Rajik Khan*, Assistant Professor of Industrial Design, NIT Rourkela, for their support during the research period.

The help and cooperation received from the author's friend-circle, staff of the Department of Training and Placement, staff of Department of Industrial Design is thankfully acknowledged.

Last but not the least, the author has been forever indebted to his parents' understanding and moral support during the tenure of his research work.

Korra Dileep Kumar

ABSTRACT

The aim of the project is to design a pipe cleaning and inspection robot for industrial applications. This is going to use very simple mechanism for cleaning the internal area of the pipe with changing diameters. The design is focusing on developing a bevel gear mechanism which can able to clean and translate the robot body into the pipe effectively. Here we are going to use only single DC motor for both cleaning and locomotion in the pipe. The inspection of the pipe is by using the ultrasonic sensor. The ultrasonic sensor is going to give the distance between the obstacle and the robot. According to the distance measured we are going to know about the bends and joints. The ultrasonic sensor is also going to give information regarding the waste materials accumulated in the pipe.

TABLE OF CONTENTS

LIST OF FIGURES

LIST OF TABLES

TITLE **PAGE**

1 INTRODUCTION

Pipes are one of the most important components that are being used for the transportation of the raw materials in many industries. They are the integral part of oil and gas industries. Pipelines are used to carry materials like water, crude oil, gases, petroleum and industrial waste. Due to over usage the pipes will damage very less time. So we have to monitor the pipes continuously and clean the pipes on a regular basis. But inspection and cleaning the pipes is not an easy task it requires a lot of effort and time.

In olden days, large size pipes like drainages are cleaned manually by labors. Because of the size of the pipes and shapes involved with them we can't use men for all occasions. Especially the industrial pipes vary in size from millimeters to meters and contain many types of harmful substances inside the pipe. The shapes are also very complicated, and branches like T-shape, Y-shape, increaser, decreaser and elbow are making the locomotion even more difficult. Because of the harmful substances it is necessary to use devices that can do the inspection and cleaning operations in the pipe.

Because of the above reasons the only option we left with is the robots. The robots can come handy for pipeline inspection and cleaning. Now a day's many researchers are working on the development of in-pipe robots. There are many robots designed for inspection and cleaning some of them are given below

1. Wheeled type
2. Caterpillar type
3. Wall-pressed type
4. Walking type
5. Inchworm type
6. Pig type (Pipe Inspection Gauges)

1.1 Origin of Work

In olden days pipes were cleaned using the human labors. The labor used to enter into the pipe and he used to clean the pipe by putting lot of efforts and consuming much time. Sometimes he even risks his life by entering into the pipe. Pipes used in industries contain many types of chemicals and harmful substances. Because of harsh environment we can't use human labors in the pipes. Now-a-days the human labors are replaced by the in-pipe robots. In industries the many types of in-pipe robots are being used for the purpose of cleaning and inspection.

Cleaning is not an easy task to perform, it requires lot of efforts. Because of the shapes and size variations in the pipes, a simple robot cannot fulfill all the requirements. Hence we need to accommodate different techniques needed for cleaning the pipe in single robot. So many researchers are studying about the best mechanism that is going to be used for pipe cleaning and inspection. Because of these reasons we need to develop a better pipe cleaning and inspection robot to save time, men and money.

1.2 Problem Statement

Pipe cleaning is very important for the proper transportation of raw materials from one place to other in industries. But cleaning is not an easy task. Harmful substances which are accumulated in the pipe make it very difficult for humans to work in the pipes. The changing diameter of pipes from few millimeters to several meters also a major factor. To overcome the size variation problem and to prevent human intervention in pipe cleaning an in-pipe robot with suitable features has to be developed in this project.

1.3 Objective

1. The objective of the project is to design a pipe cleaning and inspection robot for industrial applications.

2. To develop an in-pipe robot for pipes with changing diameters.

3. To develop a single mechanism for both locomotion and cleaning.

4. To implement low-cost inspection system with good accuracy.

5. To develop better cleaning device.

1.4 Thesis Overview

This dissertation is organized as follows

Chapter 2 provides the information regarding the work done so far in developing an in-pipe robot for cleaning and inspection. It also contains literature review on in-pipe robots and provides information about the existing models of in-pipe robot.

Chapter 3 devotes to concept development. It will give data about various components used in the in-pipe robot. It is also going to give information about various stages in developing the final model of in-pipe robot.

Chapter 4 deals with the development of in-pipe robot. It will provide information about robot fabrication. Motion control and inspection of pipe using the in-pipe robot is also discussed in this chapter.

Chapter 5 outlines the experimental results of the work. It is going to provide information regarding the inspection and cleaning. It talks about the performance of the in-pipe robot in a real environment.

Chapter 6 deals with the conclusion and future work.

2 LITERATURE REVIEW

2.1 Overview

Lot of work has been done on the pipe cleaning robot up to now. Many types of robots had been invented. In this a lot of literature study is done to understand the mechanism of various types of in-pipe robots. Literature work is also done on various sensors that are used for inspection of in-pipe environment for detecting the flaws in the pipe.

2.2 Classification of In-Pipe Robots

Generally, in-pipe robots configured into the following six types:

i. Wheeled type
ii. Caterpillar type
iii. Wall-pressed type
iv. Walking type
v. Inchworm type
vi. PIG type(Pipe Inspection Gauges)

Wheeled type in-pipe robots are very simple in design. They will appear just like a regular robot. They can only use for pipes with horizontal sections. The main problem with this type of robots is that they can't give enough support to the robot structure while the robot is in motion inside the pipe line. Enough support can be provided to the body by maintaining more wheel track [1]. Fig.1 represents a typical wheeled type in-pipe robot for inspection purpose.

Fig 1 A typical wheeled type in-pipe robot [1]

Caterpillar type in-pipe robots will provide more gripping nature to the interior of the as compared to that of a standard wheeled type in-pipe robots. They are used in places where we require large grip with the pipe walls. Moreover, these robots are suitable for varying diameter pipes [1]. Fig.2 represents a typical caterpillar type in-pipe robot for inspection purpose.

Fig. 2 A typical caterpillar type robot [1]

Wall pressed type of pipe cleaning and inspection robots were very useful for the locomotion in the vertical pipes. This type of robot contains flexible links that can provide sufficient amount of force which will help the body to move in vertical pipes without slipping [2]. Fig.3 represents a typical wall pressed type in-pipe robot for inspection & cleaning purpose.

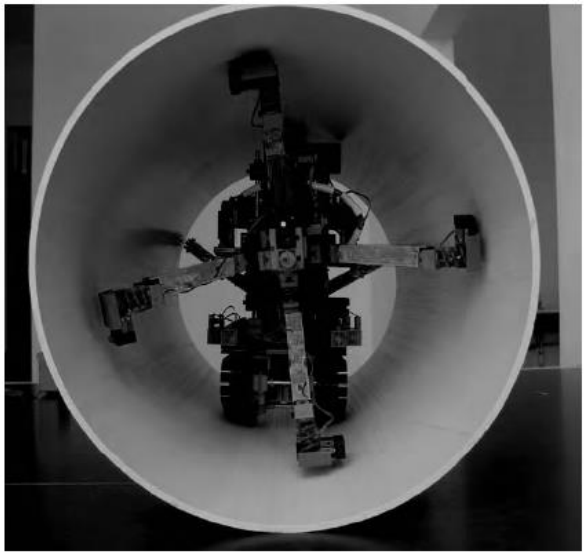

Fig.3 A typical wall pressed type robot [2]

Walking type in-pipe robots are rarely used in the industries due to its mechanical complexity. Its design is very sophisticated so it can't be used in all the time unless the situation demands [3].Fig.4 represents a typical walking type in-pipe robot for inspection & cleaning purpose.

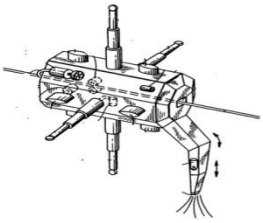

Fig 4 A typical walking type robot [3]

Inchworm type in-pipe robots are very rarely used for pipes with long distances. They are preferred using the pipes with small diameters of range in millimetres. Fig.5 represents a typical inchworm type in-pipe robot for inspection & cleaning purpose.

Fig.5A typical inchworm type robot [4]

PIG type in-pipe robots are very famous for inspecting pipes with large diameters. It is one of the most commonly used pipe cleaning robot when there is a good amount of flow in the pipeline. By making small changes like adding a propeller, the motion of the robot can be controlled [38] as shown in Fig.6.

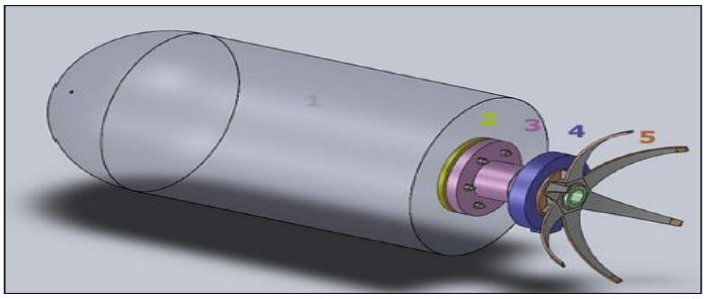

Fig.6 A typical PIG type robot [5]

This investigation has been focussed on the implemented methodologies on the categorised in-pipe robots for performing in-pipe cleaning and inspection tasks. Moreover, this work has been concentrated on review of various sensors used in robots to perform in-pipes inspection operation for determining flaws/cracks, corrosion affected areas, blocks and coated paint thickness. Various actuators like dc motors, servo motors, pneumatic operated and hydraulic operated are discussed in this review analysis to control the motion of various mechanical components of the robot.

This paper is organised as follows: Section-2 provides review on various in-pipe inspection techniques using sensor fusion data. Section-3 addresses review on various actuators using to control the motion of the robots. Section-4 deals with the review analysis on various in-pipe robots mechanical structures. Section-5 concludes the paper.

2.3 Review on Sensors used for Inspection

There are several sensors are equipped to the robot for the inspection purpose. Inspection task includes detection of corrosion, blocks, flaws, cracks, tracing, locating, etc. in the pipe. Some of the sensors used for this purpose are:

a. Ultrasonic sensor
b. Magnetic sensor
c. Infrared sensor
d. Vision sensor(camera)
e. Tactile sensor
f. LASER (Light Amplification by Stimulated Emission of Radiation).

Most of the above mentioned sensors are range sensors and are used to measure the distance a point to the objects. The several range sensing techniques are

Triangulation This is the simplest method for measuring range. The light is emitted from the source to the object at an unknown distance 'D'. The object reflects the light back to the detector at an angle 'β' as shown in Fig.7. The distance between the source and the detector is already known and it is B.

Therefore the unknown distance $D = B * \tan \beta$ (1)

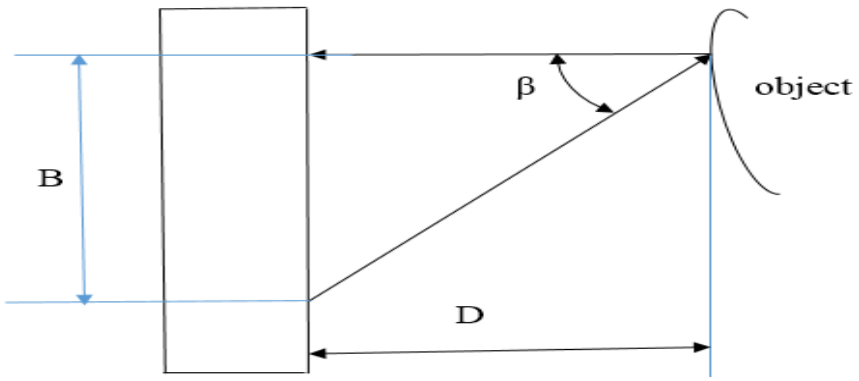

Fig.7 Representation of triangulation for measuring distance

Structured Lighting Approach This method uses light for calculating the range. In this method a light pattern is projected on to a set of objects as shown in Fig.8. Then according to the distortion caused by objects, the range is calculated from Eq. (2).

$D = \lambda \tan \beta$ (2)

Where λ is the focal length of the lens

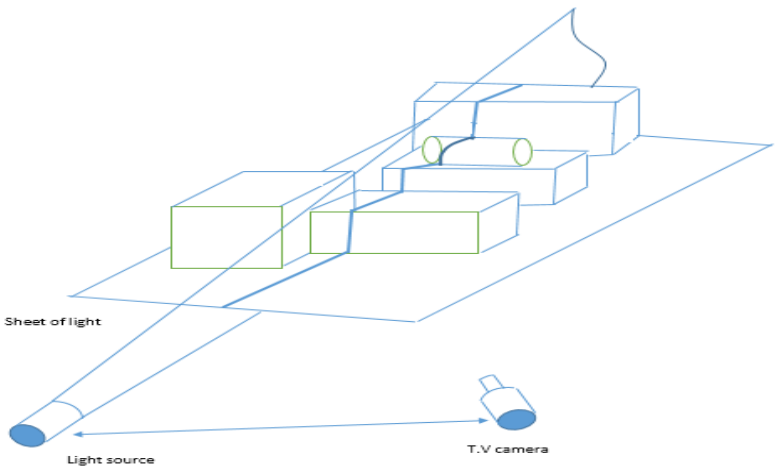

Fig.8 Representation of Structured Lighting Approach for measuring distance

Time-of-Flight Laser Range Finders A laser rangefinder which uses a laser beam to determine the distance to an object as shown in Fig.9.It operates on the time of flight principle by sending a laser pulse towards the object. It also measures the time taken by the pulse to be reflected off the target and returned to the sender.

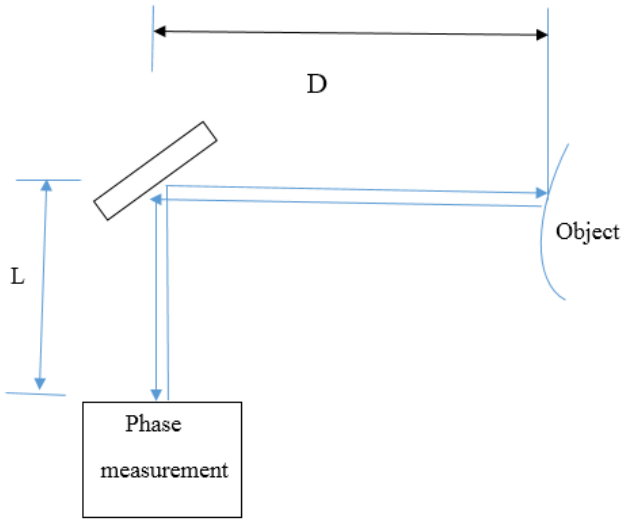

Fig.9 Time of flight ranger finder

Unknown distance can calculated from Eq. (3)

$$D = (C * T)/2 \quad (3)$$

Where C = Speed of light,

T = Pulse transit time

In-pipe inspection using ultrasonic sensor

Ultrasonic sensor is one of the commonly used sensors that is being used for the distance measurement and can also be used for the inspection of the pipe. The sensor uses the ultrasonic waves for finding the obstacles in the pipe. The working principle of a typical ultrasonic sensor is represented in Fig.10. In order to inspect the in-pipe environment and detect the flaws in the pipe, ultrasonic sensor has been used inpast research work [1],[6],[7], [8], [9], [10], [11].

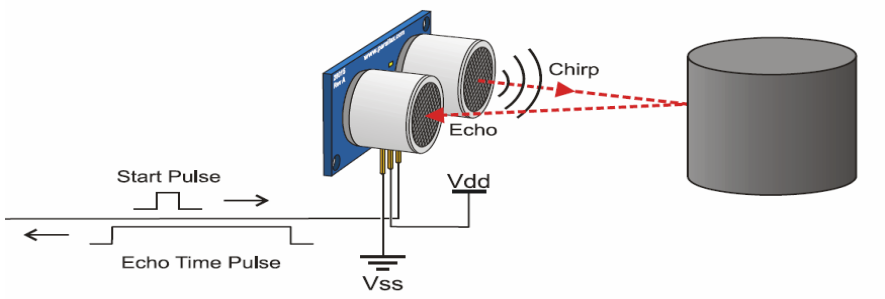

Fig.10Working principle ultrasonic sensor

In-pipe inspection using magnetic sensors

Magnetic sensors are commonly used to communication (between the user & robot) in the pipe. These sensors reduce the shielding effect in the metallic pipes. Many experimental results gave useful output in communication when magnetic sensors are used in the robot. The working principle of a typical magnetic sensor is represented in Fig.11. A magnetic sensor has been used by Choi et al. [9], Qi et al. [10] for tracing and locating the robot in the underground pipes.

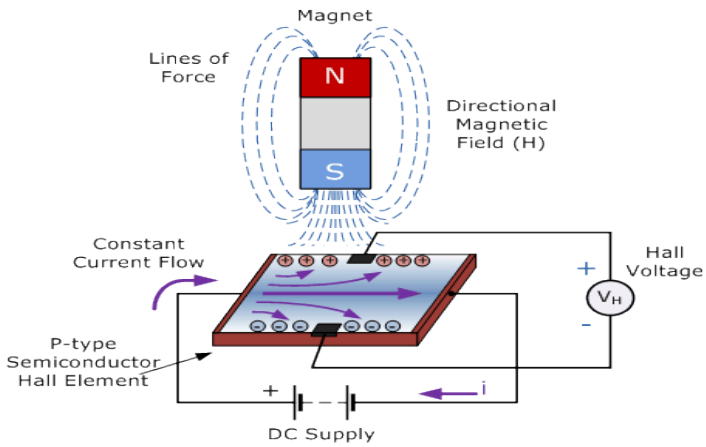

Fig.11Working principle magnetic sensor

In-pipe inspection using infrared sensors

Infrared sensors are just like the ultrasonic sensors. They use infrared waves for detecting motion of robot inside the pipe on the basis of temperature. This kind of sensors can be used for detecting the path of robot in the pipeline. The working principle of a typical infrared sensor is represented in Fig.12. In order to inspect the inside area of the pipe infrared sensors have been used in [8]

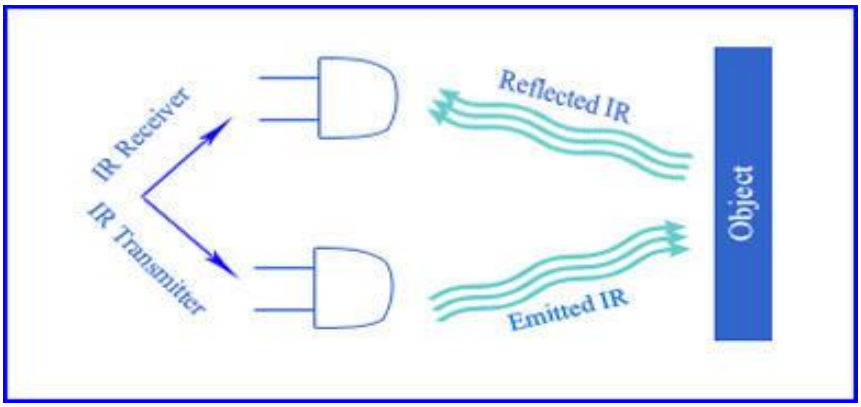

Fig.12Working principle infrared sensor

In-pipe inspection using vision sensors

Vision sensors (cameras) are very useful for performing inspection tasks in pipe lines. The vision sensor is a charged coupled device. This sensor gives the most accurate information about the interior of pipes. It is very useful for monitoring the pipe with the help of a display device. In order to inspect the inside pipe environment [1], [7], [8], [11], [12], [13], [14], [15], [16], [17], [18], visual sensor (camera) has been.

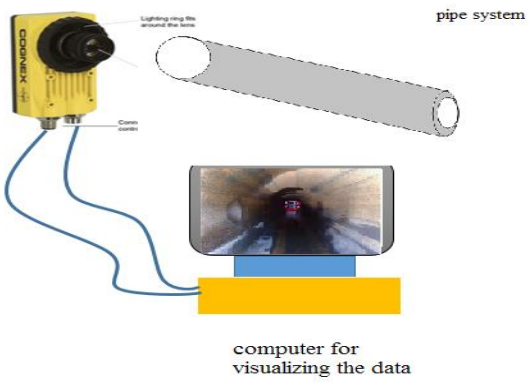

Fig.13A typical vision sensor [8]

In-pipe inspection using tactile sensors

Tactile sensors give information about the inside environment of the pipe by staying in continuous contact with the pipe. This sensor can be very helpful in detecting the pipe structure and roughness caused by the corrosion and wastes accumulated in the pipe. The working principle of a typical tactile sensor is represented in Fig.11. There are different types of touch sensors those uses principle of capacitance, inductance, resistance etc. In order to detect paint thickness and flaws the pipe capacitive sensor has been used [2], [19].

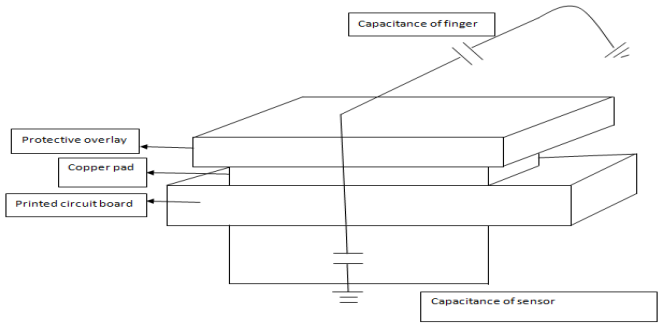

Fig. 14Working principle touch sensor

In-pipe inspection using LASER sensors

LASER (Light Amplification by Stimulated Emission of Radiation) is an electronic device that produces electromagnetic radiations. The working principle of a typical laser sensor is represented in Fig.12. It produces light by the method of optical amplification. For the purpose of inspection LASER has been used in [1], [8], [18].

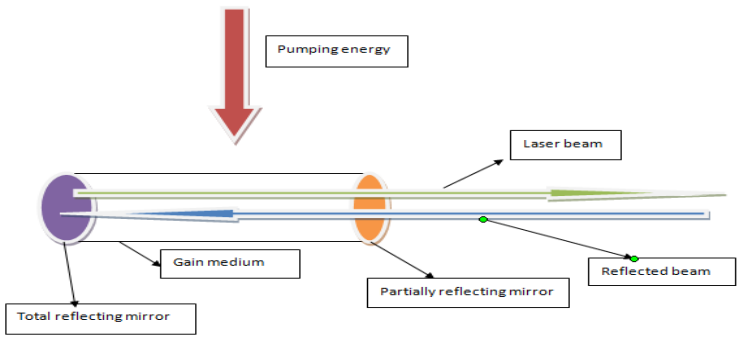

Fig.15Working principle of ruby laser

Table 1 illustrates the utilization of various sensors equipped to the in-pipe robots for performing inspection task. The type of sensor used by the previous researchers for acquiring the in-pipe information is tabulated below.

Table 1 Sensors used by robots for performing inspection operation

SI. No	Type of sensor used	Reference number	Application
1.	Ultrasonic sensor	[1], [6], [7], [8], [9], [10], [11].	Detecting flaws in the pipe.
2.	Magnetic sensor	[9], [10]	Tracing and locating the robot in the underground pipes.
3.	Infrared sensor	[8]	Inspection of pipe environment.
4.	Vision sensor	[1], [5], [7], [8], [9] [11], [12], [13], [14], [15], [16], [17], [18], [20], [21],[22], [23], [24], [25], [26], [27].	Visual inspection of the pipe.
5.	Touch /capacitive sensor	[2], [19]	To detect paint thickness and flaws the pipe
6.	LASER	[1], [8], [18].	For the purpose of detecting flaws

2.4 Review on Actuators used for Motion Control

Actuators are the devices used for causing relative motion between the adjacent links. The may be of linear of rotary. Robots will perform their tasks (may be of inspection or cleaning) in the pipeline according to the energy/power supplied to the joints. The following three many types of actuators are generally used for imparting motion to the mechanical parts of in-pipe robots.

i. Electrical Actuators
ii. Hydraulic Actuators
iii. Pneumatic Actuators

Electrical actuator takes the electrical energy as the input and converts it into a mechanical form. Some of the electrical actuators used in-pipe robots are DC motors, and servo motors (Fig.13). In order to do move the robot inside the pipe, servo motor has been used in [18] and dc motor has been used in [13], [15], [28],and [29].

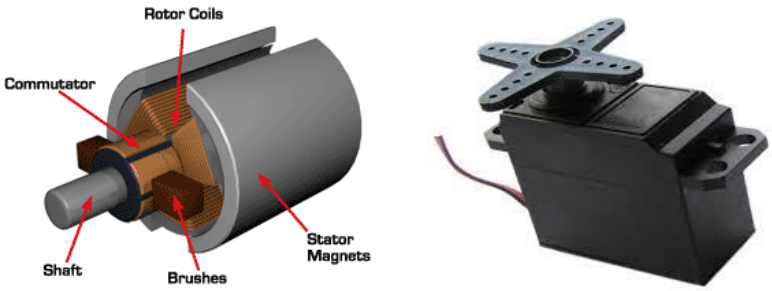

Fig.16 Electrical actuators (DC motor and servo motor)

Hydraulic actuators use fluids and hydraulic power to cause the motion in the system as shown in Fig.14. The hydraulic actuators are very helpful in lifting heavy loads. It works with piston and cylinder mechanism. For actuating the painting manipulator hydraulic actuator has been used in [6].

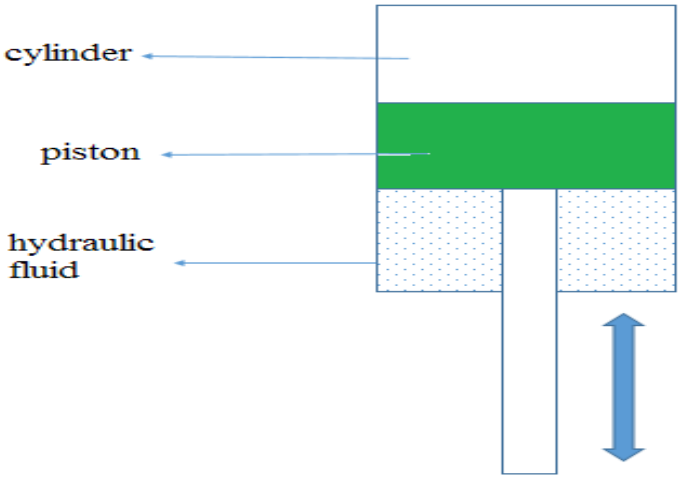

Fig.17 A typical hydraulic actuator

Pneumatic actuator works on the principle of compressed air at high pressure as shown in Fig.15. They are used to provide both linear and rotary motion. These actuators can produce large force with fewer pressure changes. To actuate the devices pneumatic actuator has been used in [21], [24], and [30].

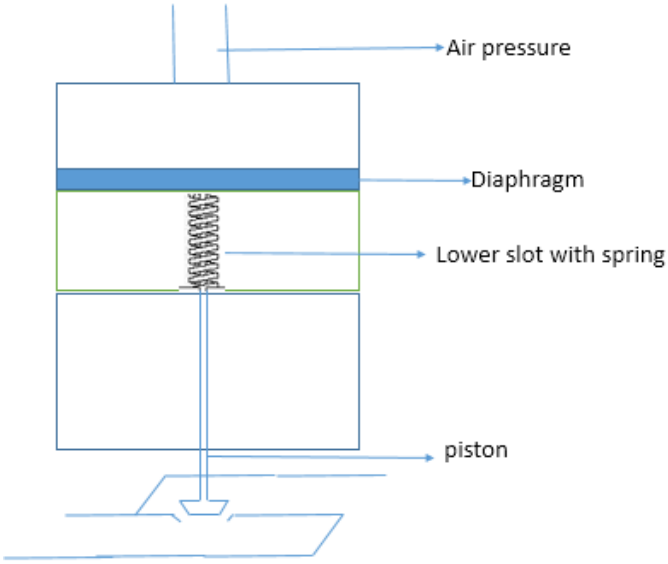

Fig 18 Pneumatic Actuator

2.5 In-Pipe Robotic Systems and their Mechanical Architecture

Based on the mechanical architecture, in-pipe robotic systems have been classified into the following six categories:

i). Wheeled type

ii). Caterpillar type

iii). Wall-pressed type

iv). Walking type

v). Inchworm type

vi). PIG type(Pipe Inspection Gauges)

Wheeled type in-pipe robots

Wheeled type in-pipe robots are very simple in design. They will appear just like a regular robot. They can only be used for pipes with horizontal sections. The main problem with this type of robots is that they can't give enough support to the robot structure while the robot is in motion inside the pipe line. Enough support can be provided to the body by maintaining more wheel track.

Cordes et al.[12]developed an autonomous robot for operating in a sewage system. This robot uses wheels for the locomotion. The body of the robot was divided into many modules for better locomotion. Because of its structure as shown in Fig.16, the robot can carry large number of devices which are helpful for doing certain tasks such as inspection, cleaning and detecting flaws in the pipe. The developed in-pipe robot was able to move in the pipe autonomously and can able take turns and move over the steps of heights of 300mm. The

control architecture of the hardware was very flexible and able to perform several tasks intelligently. They used both the full force control and the kinematic control methodologies for better sustainability.

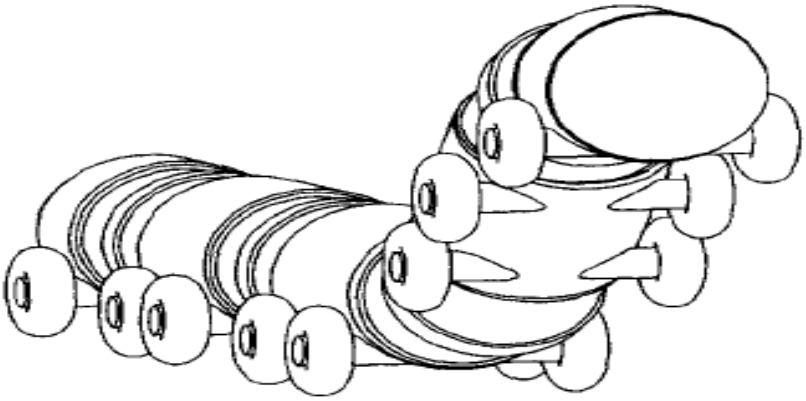

Fig.19 Autonomous sewer inspection robot with multi modules [12]

Balaguer et al. [1] discussed the development of tunnel inspection with the help of robots. The developed robotic system aimed to collect the data from the tunnel environment as shown in Fig.17. The in-pipe robot can work in the environments of dark, toxic and very dangerous for the human beings to inspect and collect the data. Their research work focussed on surveying the environment of the tunnel by using the robots. They discussed various types of robotic systems with devices like ultrasonic sensors, laser sensors, detecting cameras, 3-D lasers for finding the cracks, etc. in the tunnel. All these robotic systems are employing humans for assisting them. The studies finally come up to the conclusion, that to develop a fully autonomous robotic inspection and survey system will be much helpful.

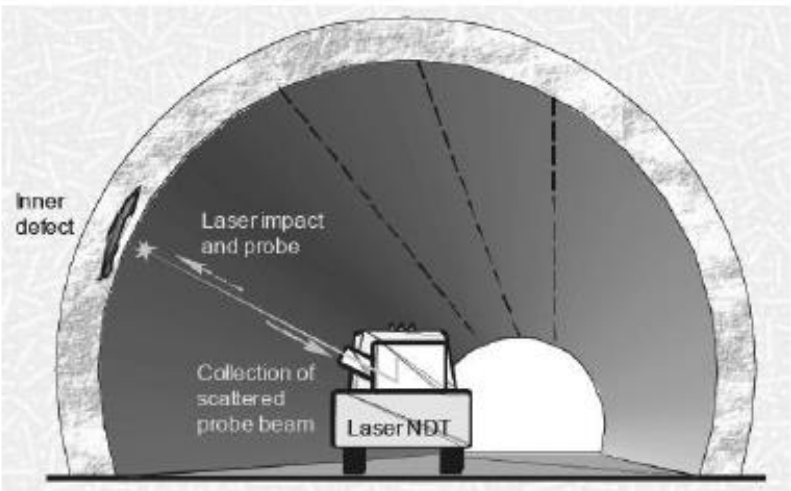

Fig 20 laser NDT for detecting flaws in the pipe [1]

Yusoff et al. [31] addressed the development of wireless inspection robot for air conditioner ducts. The speed and motion of the robot were controlled by using the joystick. The robot also helps in detecting the leaks by heat detecting technique using a temperature sensor and cleans the duct of the air conditioner. The user is able to monitor the pipe with the help of video captured by the camera. The robot used PIC16F877A and visual basic 6.0 for interfacing with the computer. They used servo motors for the forward and backward motion of the robot inside the pipe. Finally, they come to a conclusion that the robot was reducing the number of human workers and can access the areas that can't be reached by humans. The complete structure and working principle of the developed robot is shown in Fig.18.

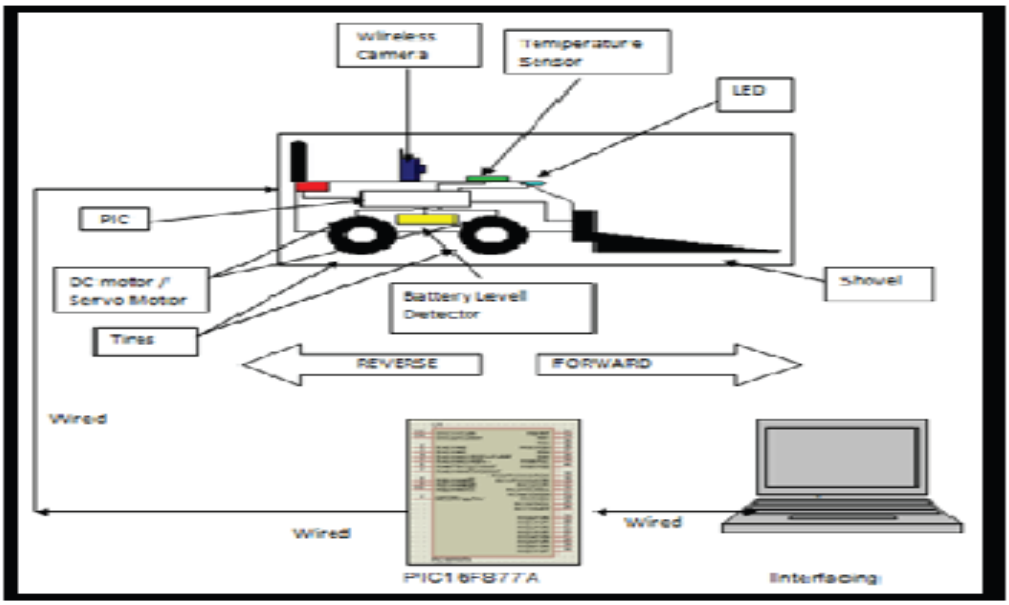

Fig .21 Air conditioner duct inspection robot developed by Yusoff et al. [31]

Elkmann et al. [18] developed a cleaning and inspection robot for sewer filled with water partially. They used many kinds of sensors like ultrasonic scanner, laser ranging sensor and camera as shown in Fig.19. The ultrasonic sensor used for detecting cracks and flaws in the concrete structure. A camera used to gather information about the inside environment of the pipe. The ultrasonic scanner was for detecting sewer gases and water spaces. The robot can be used for concrete pipes with large diameters ranging from 1400 to 2800 mm. Deepak et al. [42] discussed the type of wheels that can be used in the mobile robot. They gave information about castor, Swedish, fixed standard, spherical type wheels. It also gave information of degree of freedom of different types of wheels that can be used in mobile robot.

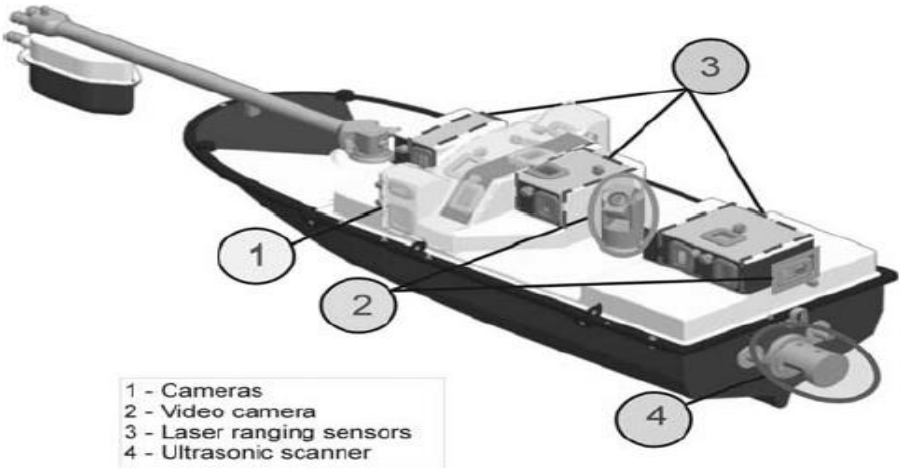

Fig.22 Sewer cleaning and inspection robot [18]

Chen et al. [6] presented a robotic system which was used for coating the S-shaped pipes. The proposed robotic system was able to paint the inner area of the pipe without wasting the paint. There are three components in the robotic system they are: 1) Chassis, 2) Positioning base and 3) Painting manipulator. The chassis consists of wheels, hydraulic and gasbags as shown in Fig.20. The robotic system was made to move in and out of the pipe system with the help of wheels. The positioning base used for pointing the painting manipulator to the desired location. The painting manipulator used to paint the interior of the pipe .To get the information regarding the spray distance, they sued various sensors technologies are used. The airless spray technology is for the distance between 30cm to 50cm. The air-assisted airless technology is used for 25 to 30cm. The air spray technology is for distances ranging between 15 to 25cm.

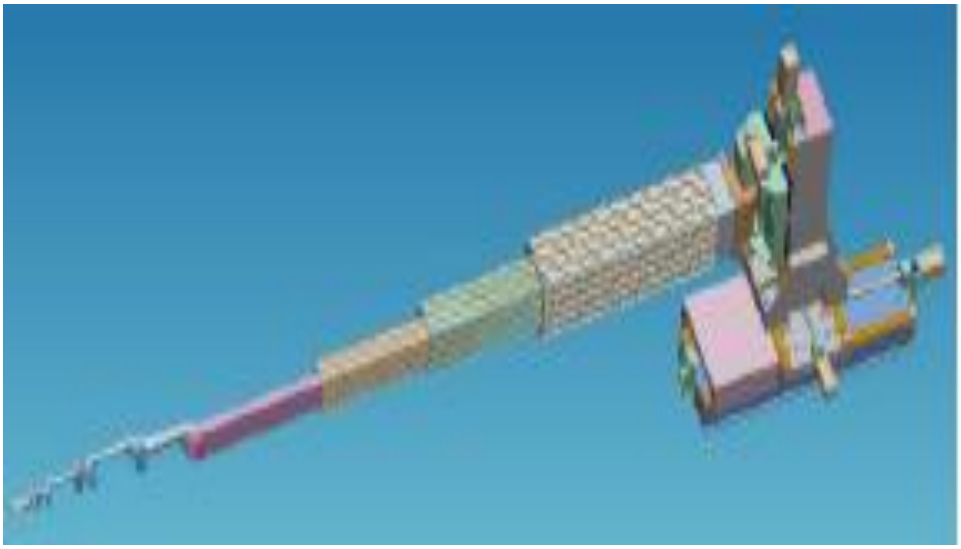

Fig.23 Redundant painting manipulator [6]

Saenz et al. [7] developed an in-pipe robot for performing inspection and cleaning tasks. The robot is wheel driven and used for the pipes with diameter ranges from 1600 to 2600 mm. The cleaning unit consists of a nozzle, with the help of it very high-pressure liquid is pumped onto walls to remove the waste. The sensor system consists of various types of sensors like ultrasonic scanners, multi-camera unit to determine the cracks, inclinometer for position measurement, infiltration sensor and underwater camera system for underwater inspection and crack detection purposes. La [28] invented a sewer cleaning apparatus. Here the frame was displaced on the wheels and can be adjustable to the pipe. The toothed wheels are driven by the motors and will give support to the body of the apparatus. The sharp toothed wheels may cause damage to the pipe and it will cause problems while withdrawing the device through the pipe. In case of the jamming, the propeller wheels help in moving without touching the walls of pipe just like a torpedo or vessel. Lynch [32] invented the device for gutter cleaning robot. This device contains a debris auger that will remove the debris. There may be many types of augers like bristle, flap, twisting, plough type, etc. These can be exchanged according to the use. They used fluids for cleaning the pipe. In this manner by using the auger and the pressurized fluid the device can clean the pipe.

Atwood et al. [8] invented the device for inspection of the pipelines. The design of the robot system is like a wheeled type. There are two portions of the body which are the track 1 and track 2. They used various sensors inspecting the interior of pipelines. Langley et al. [19] invented the pipe inspection robot. The pipe inspection was made possible with the conductive brush and capacitive pads. When there is a change in the capacitance or conductance, the flaws in the pipe can be identified. The conductive brush used in this system is rotatable through an arc of 360. This developed system is mainly used for girth welds.

Langley et al. [30] gave information of a device was used for cleaning, inspection and coating the pipeline. The device uses wireless grounding for all the components. The communication between modules is by means of CAN bus which is a serial communication. The coating is performed by means of fusion bonded epoxy and cleaning by vacuum.

Langley et al. [13] invented the device for pipe coating and inspection. The conductive brushes and mil gauge are used for detecting the thickness of the coating. Cameras in the front used for inspection and continuous feedback of visual data to the operator. The controlling is wireless that is remote control. They used motorized wheels for moving the robot. Huxiong [33] invented a swing-type pipe cleaning robot that comprises a rack, a sweeping mechanism and a rotation driving mechanism. Sweeping mechanism is arranged on the rack and includes a sweeping brush and a sweeping driving mechanism. Sweeping driving

mechanism is for driving the sweeping brush to rotate in the direction of the first axis. According to the swing-type pipe cleaning robot, automatic large-breadth-swing cleaning and clearing can be carried out on the interior of an air conditioner pipe. The swing-type pipe cleaning robot has the advantages of being rapid in cleaning operation, convenient to use, high in cleaning efficiency.

Liu [34] described a pipe cleaning device that uses a camera for inspection and wheels for moving in and out of the pipe. There is a removable suction provided for cleaning the pipe. There are two driving wheels for the travel. Tong et al [35] invented an air conditioning duct cleaning robot. There are various units like the cleaning module, arms driving module, walking driving modules, and control modules. There also provided a camera and lamp for the inspection of the pipe. Chiu et al. [36] invented the pipe cleaning robot. This device is mainly focused on how to change the directions quickly in a narrow pipe and how to drive the mobile pipe cleaning robot into the pipe.

Caterpillar type in-pipe robots

The caterpillar type robots provide more gripping abilities than a standard wheel type. These robots are used in places where we require large grip with the interior walls of the pipe. They can also adjust the size according to the pipe diameter.

Kim et al. [15] designed a single-module fully autonomous mobile pipeline exploration robot called FAMPER. It can be used for the inspection of 150mm pipe. It contains four caterpillar based motion system as shown in Fig.21, for superior performance in all types of complex networks of pipes. FAMPER also provides excellent mobility in vertical as well as horizontal pipes. It is equipped with small and very powerful computing system various sensing and actuating various components of the devices.

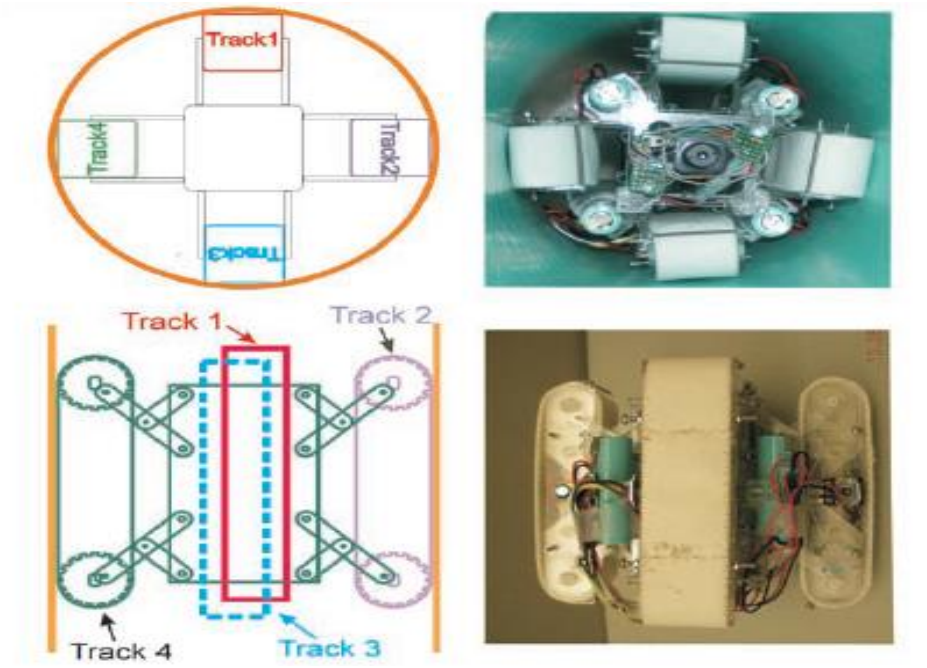

Fig 24 In-pipe inspection robot [15]

Truong-Thinh et al. [14] proposed an in-pipe inspection and cleaning robot. The robot mostly used for the inspection of a pipe. The robot was able to move in the pipe with diameter 30 cm to 40 cm. The locomotion of the robot in the pipe was performed with the help of toothed wheels as shown in Fig. 22. The robot contains a cutting plate at the front part of the robot that is used for removing waste accumulated in the pipe. They used CCD camera for the inspection of the pipe.

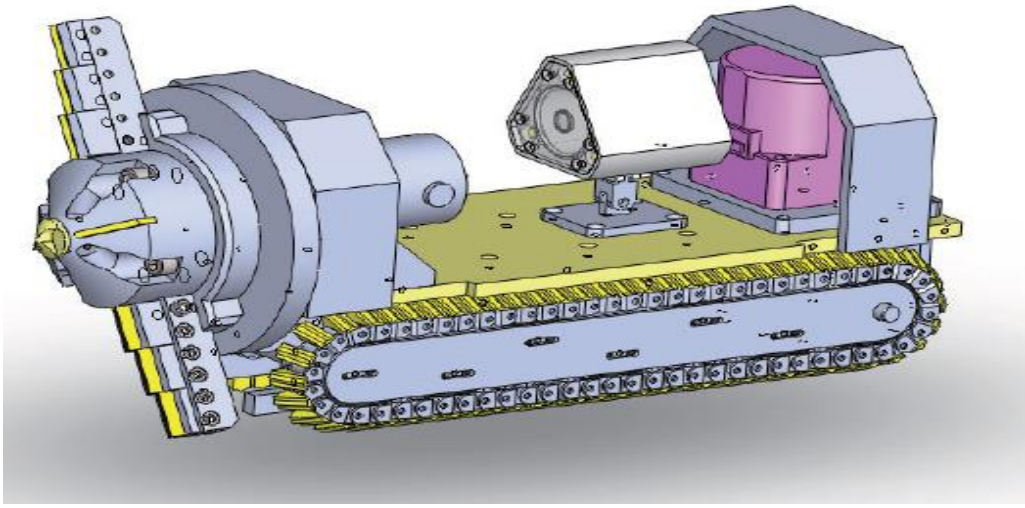

Fig. 25Modelling of sewage pipe cleaning and inspection robot [14]

Meng et al. [20] discussed the experimental studies on motion and cleaning effect of a duct cleaning robot. The developed robotic worked in efficient way in cleaning the ducts with round shapes. After cleaning the duct a pre-run of 3-4 hours required. The experimental

results showed that the developed robot was inefficient in cleaning the ducts at elbows and corners. Moreover, the robot failed in cleaning the bacteria near the rectangular ducts. All these drawbacks were taken into consideration and some changes made in the robot design. The modified robot is shown in Fig.22.

Fig.26 Modified duct cleaning robot [20]

Wall pressed type in-pipe robot

Wall pressed type of pipe cleaning and inspection robots were very useful for vertical pipes. This type of robot contains flexible links that can provide sufficient amount of force which will help the body to move in vertical pipes without slipping

Qi et al. [10] gave information regarding tracing and locating a pipe cleaning and inspection robot for underground pipelines. They used a magnetic sensor and electromagnetic emitter for tracing the robot. They simulated the entire setup to find the suitable coil for better transmission of signals between outside and inside the pipe. Simulation results are useful to refine the structure and thereby error between the magnetic dipole and emitting coil can be reduced. Finally this gives a better design of coil structure. They also focused on tracking the robot with an error of less than 20cm and 6-degree orientation. They overcome the shielding effect by using the electromagnetic signals inside the pipeline.

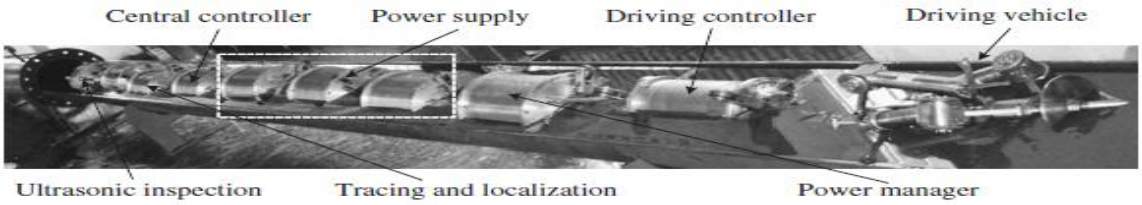

Fig.27 Tracing and localization system for in-pipe robot [10]

Zhang et al. [16] developed in-pipe robotic system for performing inspection task. Their primary concern was to develop the robot for underground pipes with changing diameters. The robot is containing three sets of locomotion wheels which are at 120 degrees symmetric to each other. They developed the models based on the adaptability to change according to the pipe diameters. They come with a prototype that can able move in pipes with the diameter ranging from 400-650mm. The designed prototype is also excellent at providing a sufficient tractive force that is very necessary to anchor the device in the pipe. There are right amount of tools that are helpful for visual inspection and some non- destructive testing tools are used to monitor the blocks, cracks, corrosions, etc. inside the pipe. The experimental results showed the robot can easily pass through slopes and Z-shaped joints. Moreover, the developed system can be used for very long distance inspection beyond 1000 meters.

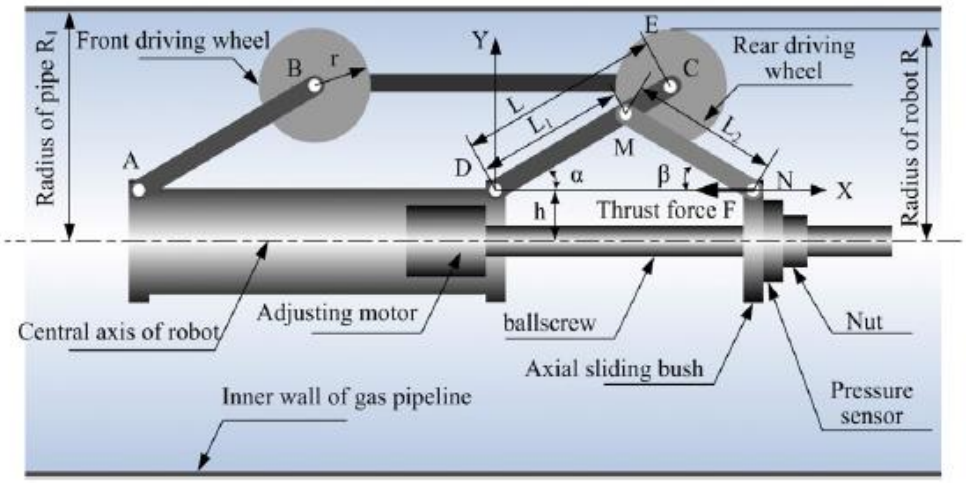

Fig 28 Pipe diameter adaptive mechanism [16]

Choi et al. [9] discussed about a mobile platform that was used for the inspection of pipes with a diameter ranging from 160mm-240mm. The mobile platform is used for inspection and Non-Destructive Testing (NDT) tasks in the pipe. The mobile platform is a snake-like structure that uses a tether cable for communication and it consists of two active drive systems one at the front and other at the rare portion of the system. Some other modules like inspection, NDT module and control module are attached in between the two driving modules. In this system, many features are facilitated like flexible leg mechanism for adjusting to the diameters of the pipe and excellent steering system (Double Active Universal Joint) which prevents the body to roll inside the pipe. All these facilities provide superb mobility of the robot inside the pipe. They successfully used some non-destructive sensors like the ultrasonic sensor and magnetic flux linkages. The major disadvantage of this in-pipe robot is that, it is to be controlled manually at the branches for choosing the directions.

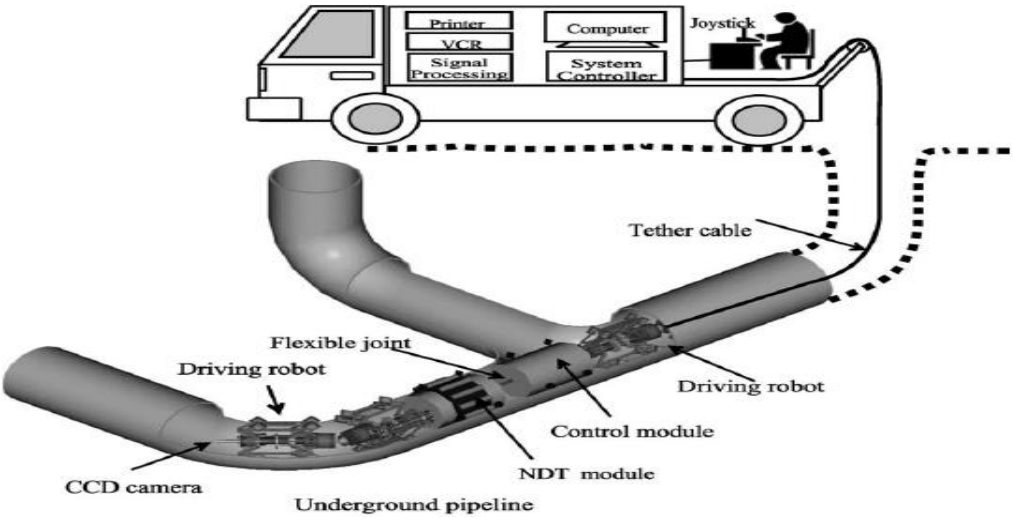

Fig 29 In-pipe robot with universal joints for better steering [9]

Nance et al. [37] invented the mechanism that will help in moving the pipeline robot in the vertical direction. The system is consisting of grippers that help in holding the pipe very efficiently. Ghorbel et al. [22] invented the in-pipe device in which there are various things like turbine system, suspension system, pitched wheels and non-pitched wheels. It also includes different sensors, various types of actuators and various types of communication modules in the robot. The wheels are 120deg apart from each other and the size of the robot is not more than 6 inches. There are two modules and an additional module can be attached to it contains a fluid driven screw - drive propulsion system. Dhananchezhiyan et al. [29] proposed a design of autonomous mobile manipulator. Here the mobile manipulator is used for the sewage cleaning. Primary focus was given to the development of mobile manipulator that is adaptable to the change in the pipe diameters to prevent the human intervention. The model of the developed robotic system is shown in Fig.24. The developed robotic system is driven with the help of motors. The high torque dc motor is providing the necessary power to the end effecter for cleaning. The prototype was designed in solid works. The developed model is tested for the pipes with a diameter of 0.03 to 0.05 meters and found adequate cleaning was being performed by the robot.

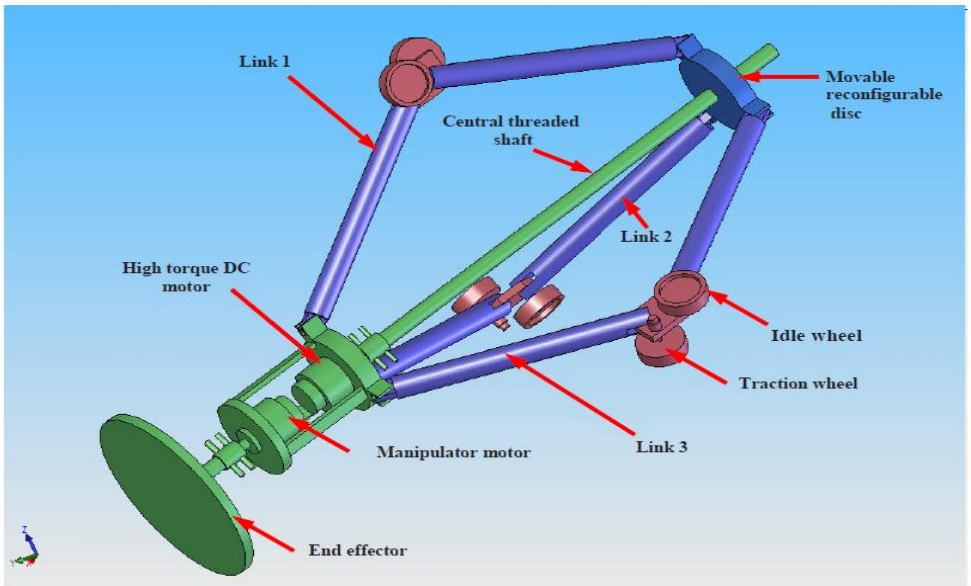

Fig.30Sewage cleaning mobile manipulator [29]

Li et al. [2] presented a wall pressed type in-pipe robot for performing pipe cleaning and inspection operations. The pipe cleaning robot is adaptive to change in size of the pipe diameter. The range of the pipe diameter varies from 150mm to 450mm. The adaptive system contains umbrella like open and close mechanism as shown in Fig.28. The robot includes various types of devices like touch sensors for detecting the surface condition. The cleaning brush is used for cleaning the pipe inner surface. The robot can be used for long length pipes with varying diameters. They used ATmega64 controller for to achieve better motion controlling of the robot.RS485 module used in order to make the robot work automate and remote controlled in real time environment.

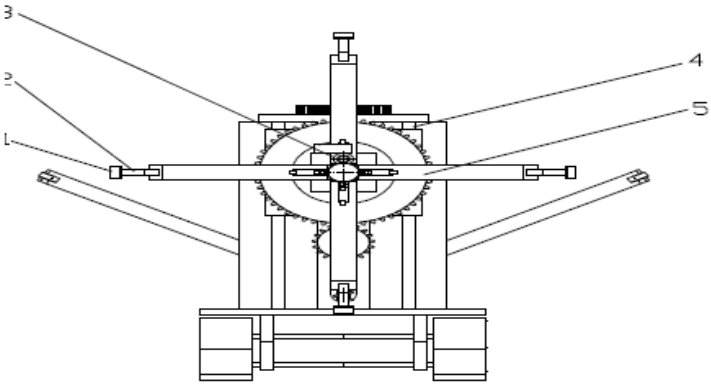

1. Brush 2. Touch sensor switch 3. Transmission shaft for Umbrella bodies
4. Lifting pole 5. Umbrella arm

Fig.31 Auto adaptive in-pipe robot [2]

Ye et al. [38] proposed a robot used for air conditioner cleaning. The robot is movable with the help of the wheels. The robot contains three parts they are 1. Front portion 2. Middle

portion 3.Back portion. The middle part is the driving unit with wheels and synchronization mechanism for adjusting to the direction changes inside the pipe. The cleaning unit is placed at the back portion of the robot. The robot is designed for both the horizontal and vertical pipes as shown in Fig.29. They made the robot pass through branches, elbows and in the vertical pipes with excellent precision.

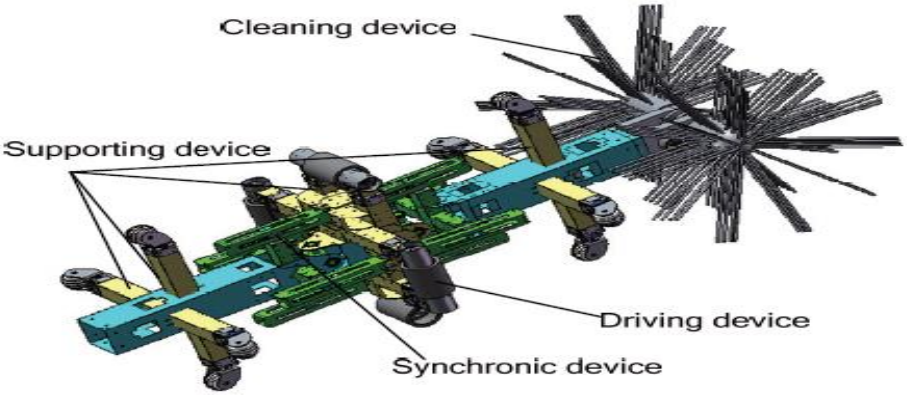

Fig.32 Pipe cleaning robot for air conditioning system [38]

Bauer [17] discussed a device that is used to clean the inner pipe with a milling tool. The milling tool is attached to the milling arm of the robot which is deflectable in only one plane of the pipe. All the power cables and camera cables are passed through a pressurized chamber of the milling robotic arm in a pressure tight way. Jung et al. [21] discussed the in pipe inspection robot. The in-pipe inspection robot consists of 6 links that form a sliding mechanism. All the links are adjustable to the pipe size. They used a pneumatic system to change in the size instead of the springs. The operating range of the robot is from 300mm to 400mm pipes. They used the rotating brush for the cleaning the pipe. They did force analysis in ANSYS Workbench.

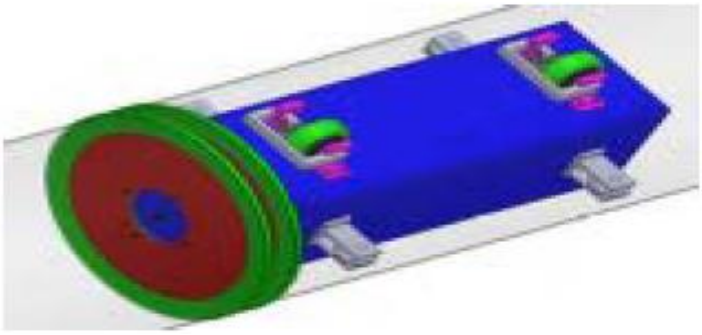

Fig 33Simple design of in-pipe cleaning robot [21]

Kim et al. [39] discussed the robot for cleaning and has two units that are foldable at 180 deg .the cleaning unit is mounted on the groove. This robot can’t perform cleaning when the robot is at standing position. The wheels will prevent the robot from fall over by exerting suitable

force on the walls of the pipe. Zhou et al. [40] invented a device contains a simple module with a cleaning unit is designed here. The cleaning unit consists of a brush rod that is attached to the impeller. The gripper will provide necessary support while the cleaning is being performed. There is an inbuilt generator that is providing power to the components.

Walking type in-pipe robot

Walking type robots are very rarely used in the industries due to its complexity. Its design is very sophisticated so it can't be used in all the time unless the situation demands.

Yang et al. [41] invented a robot for performing in-pipe inspection task. There are two operating units with many arms which can be individually adjustable. The arm contains slider-crank mechanism and an elastic unit that provides elastic pressure to the walls.

Landsberger et al. [3] presented a robot for pipe cleaning. It contains adjustable fins and retraceable legs for anchoring the body. The generator used to provide power to electronic equipment. Driven pulley and drive cable used to transfer materials. V-shaped legs are provided for better grip at the curves and bends of the pipes. Cleaning is performed with a high-pressure jet arrangement.

Huxiong [23] designed round pipe cleaning robot with an adjustable mechanism for the change in the pipe. There is a monitoring unit, which consists of a camera of visualizing the inside of the pipe. They also mentioned that the diameter of the cleaning device is slightly greater than the diameter of the pipe for better cleaning.

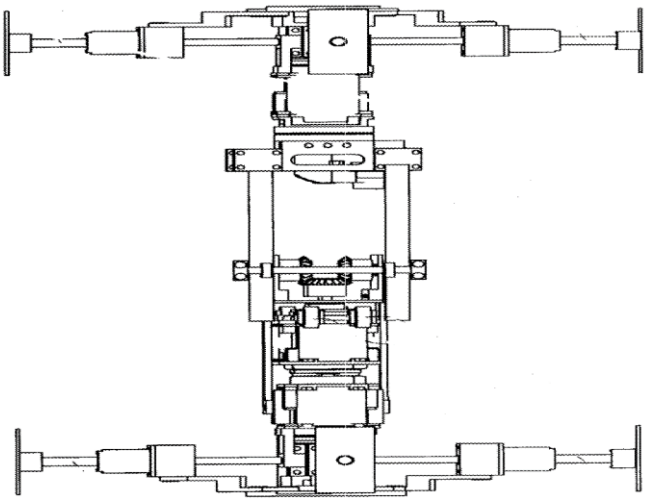

Fig 34 Walking type In-Pipe Robot [41]

Inch worm type In-pipe robot

Inchworm type of robot is rarely used for performing in-pipe operations. These type of robots are preferred for long pipes with small diameters range in millimetres.

Lim et al. [24] developed an inch-worm like pipe inspection micro robot that uses only pneumatic actuation for its locomotion. In this robot there are three units as shown in Fig.32.They are the front clamp, rear clamp and the elongated module. By varying the pressurised air in different modules, they achieved inch-worm like motion inside the pipe. The performance of the robot is dependent on the hole between the rear clamp and elongated module. The speed of the robot depends on the cycle time of pressure that is being supplied. The design is very simple and is able to fabricate this robot even for the pipes less than 10mm in diameter. Here they achieved good adaptability to changing pipe sizes and velocity of 50mm/s in a pipe with 16 mm diameter by applying pressure of 2.0 bar and cycle time 0.6 sec.

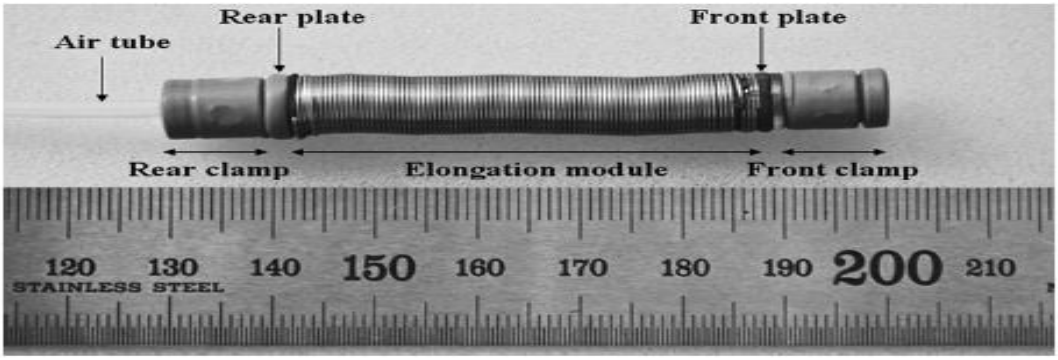

Fig.35 Inch worm prototype robot [24]

PIG type in-pipe robot

PIG type is very famous one used for large pipe diameters. It is one of the most commonly used pipe cleaning robot. These robots are used when there is a good amount of flow in the pipeline. By making small changes like adding a propeller, the speed of the robot inside the pipe can control. The PIGs are used for many functions like dewatering, inspection and cleaning the pipe on a regular basis. The PIGs are the crucial tools for the contact testing in gas and oil pipes.

Okamoto et al. [11] presented a PIG type in-pipe robot for inspection operations as shown in Fig.33. They focused primarily on the inspection of interior of the pipe for detecting the corrosion affected areas. They used various techniques like magnetic detection, ultrasonic detection, visual inspection, eddy current detection, X-ray and acoustics, for performing

pipeline inspections. Initially inspection task has been done with the help of magnetic method. But, they found it is not suitable for this task and came up with ultrasonic inspection for detecting corrosion effected parts in the pipe caused due to the corrosive materials. They used 16 ultrasonic sensors and got results very accurately even the area covered in mm^2. They are able to detect the corrosive parts with 10mm diameter and 1mm depth.

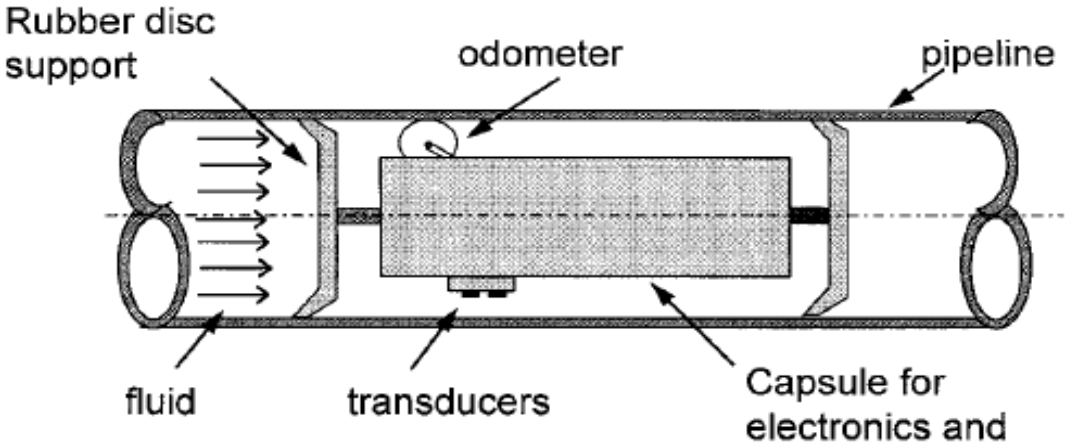

Fig.36Autonomous system for pipe line inspection [36]

Canavese et al. [5] discussed about the development of an automated pipe inspection device called smart PIG. They mainly concentrated on the design of the device in such a way that it has to pass through the pipe easily. The design is also aimed at cost reduction and making the robot as a multi-functional. So that the device can detect, locate and can change its size according to the pipe diameter. It has been given some additional features of sensing the corrosion affected areas in the pipeline by detecting the pH or salinity of the material. The additional sensors were making the device very powerful so that it gives the thickness of the corrosion in the pipe. It also provided with special devices for data acquisition and storage. Ramella et al. [25] was giving information regarding the smart foam PIG for pipe cleaning. The primary focus has been given to the development of a low-cost pipe cleaning device. The device is also so designed such that is going to face very less amount of obstacle avoidance problem as shown in Fig.34. They used the ad-hoc software for data visualization and interpretation. The developed prototype has been tested and the results were in good agreement. The results were showing that the device gave very accurate data of the pipe and is also very sensitive to small flaws and capable of large applications. Finally, its low-cost and flexibility makes it a reliable device to use in the pipelines very often.

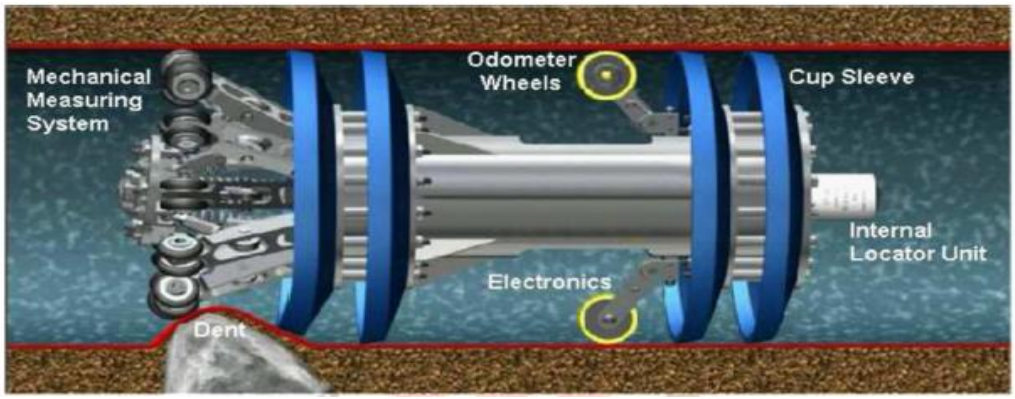

Fig.37Robot for inspection and obstacle avoidance [25]

Li et al. [26] developed a PIG type in-pipe robot as shown in Fig.35 for performing cleaning and inspection operations. Here the probe dynamics tested for convex defects and investigated using a home built inspection system. They concluded that the probe dynamics changed with the uphill and the downhill sections and when the pipe is asymmetric. The asymmetric behaviour is due the inspection device design. The experimental results proved the speed and tightening elastic force were the main causes of the inspection precision loss.

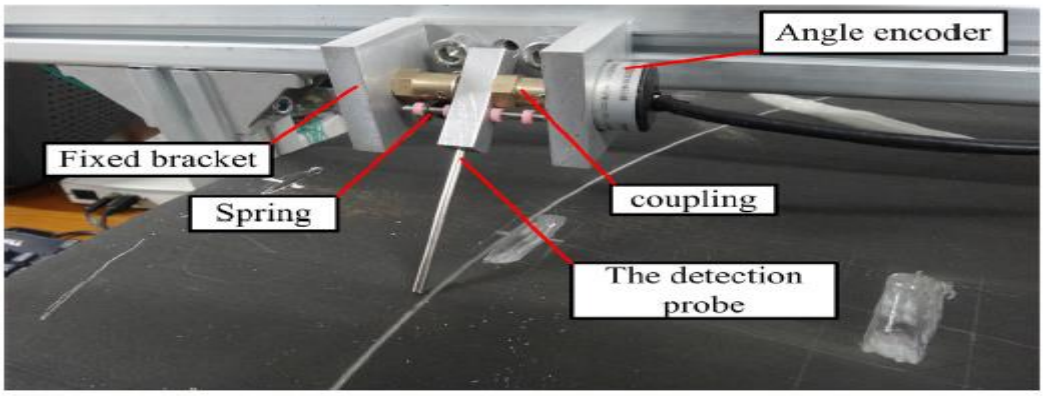

Fig.38 Structure diagram of inspection device

Zhang et al.[27]discussed the Pipe Inspection Gauges (PIGs). Here the priority is given to study the dynamic and frictional characteristics of the PIGs when it is passed through the girth weld by the help of the custom built experimental setup. The complete analysis is shown in Fig.36. The contact behaviour is studied between the girth weld and sealing disc using the finite element analysis. The simulation results showing the sealing disc can be separated into three stages 1 start-up stage 2 climbing stage 3 slop stage. In the stage 1 the PIG decelerates and after that it accelerates. The reduction and increase of speed are causing the axial vibration in the PIG.

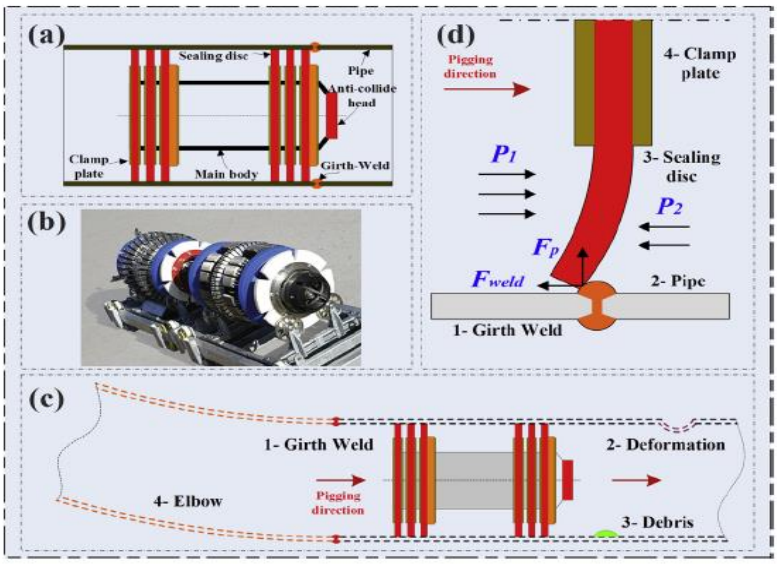

Fig. 39Measurement and friction dynamic characteristics of pipe inspection robot [27]

2.6 In-Pipe Cleaning Techniques

Previous chapter addresses various inspection and cleaning techniques used for in-pipes. There are various ways of cleaning the interior of the pipes. Among them most common methods of pipe cleaning are:

- Water jet technique.
- Cleaning with help of some type brush.

Water jet technique

In water jet technique, the cleaning is performed by using pressurized water. The high-pressurised water is passing through the nozzle hit the walls of the pipe.Fig.37 shows a typical water jet technique for performing cleaning task in order to remove debris accumulated on the pipe inner walls [7].

Fig.40Water jet cleaning technique [7]

Cleaning Brush Device

In brush type, cleaning is performed by using a cleaning brush. A cleaning brush/ rollers are equipped to the in-pipe robot as separate module. This cleaning module is actuated by a high torque DC motor [29] to performing cleaning operation.

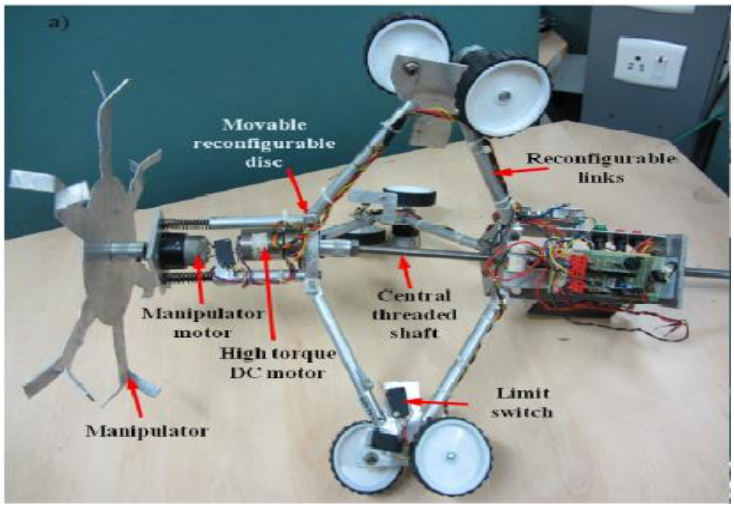

Fig.41Brush type cleaning device [29]

Table 2 summarises the various types of in-pipe robot architectures, inspection and cleaning task. Moreover, advantages and limitation of in-pipe robot architectures are mentioned

Table 2 Reviews on various types of in-pipe robot architectures

configuration	Ref. #	Inspection application				Type of Cleaning	Advantages	Disadvantages
		Flaws	Corrosion	Paint thickness	Visual inspection			
Wheel type	[1]	✓	X	X	✓	Brushes	The design of the robot is very simple. The use of sensors and cleaning devices makes the robot to inspect and clean the pipe in a better way.	The wheels may not be able to give the sufficient friction to move inside the pipe. The wheels may dislocate its position when cleaning operation performing. The robot cannot able to pass through vertical pipes.
	[6]	X	X	✓	X	X		
	[7]	✓	X	X	✓	High pressure liquid		
	[8]	✓	X	X	✓	X		
	[12]	✓	X	X	✓	X		
	[13]	X	X	✓	✓	X		
	[18]	✓	✓	X	✓	X		
	[19]	✓	X	✓	X	X		
	[28]	X	X	X	X	X		
	[30]	X	X	✓	X	Vacuum		
	[31]	X	X	X	✓	Brushes		
	[32]	X	X	X	X	High pressure liquid		
	[33]	X	X	X	X	Sweeping		
	[34]	X	X	X	✓	Vacuum		
	[35]	X	X	X	✓	Brush		
	[36]	X	X	X	X	X		
Caterpillar type	[14]	X	X	X	✓	Cutting Plate	The use of caterpillar wheels will give the robot better grip to pass through the	The design is complicated.
	[15]	X	X	X	✓	X		
	[20]	X	X	X	✓	X		

							vertical and horizontal pipes.	
Wall pressed type	[2]	✓	X	X	X	Brush	The main advantage of the wall pressed robot is to give very good grip while climbing the vertical pipes, joints, elbows etc. It is used for pipes with varying diameters.	There are some limitations like it can work only for certain range of pipe diameter.
	[9]	✓	X	X	✓	X		
	[10]	✓	X	X	X	X		
	[16]	✓	✓	X	✓	X		
	[17]	X	X	X	✓	Vacuum cleaner		
	[21]	X	X	X	✓	Cleaning portion		
	[22]	✓	✓	✓	✓	X		
	[29]	X	X	X	X	Brush		
	[37]	X	X	X	X	Cleaning rod		
	[38]	X	X	X	X	Brush		
	[39]	X	X	X	X	Milling tool		
	[40]	X	X	X	X	Brush		
Walking type	[3]	X	X	X	X	X	They can also travel in both horizontal as well as vertical pipes. The use of V-shaped legs makes it to pass through curves and bends easily.	The motion is much complicated. The leg has to move in synchronized manner for better locomotion.
	[23]	X	X	X	✓	X		
	[41]	X	X	X	X	High pressure jet		
Inch worm type	[24]	X	X	X	✓	X	They are very good in adaptability to change in pipe sizes.	The performance of the robot is dependent on the hole between the rear clamp and elongated module.
PIG type	[5]	X	✓	X	✓	Brush	Low-cost and flexibility makes it a reliable device to use in the pipe lines very often.	We cannot use the PIG type robot in vertical pipes. They cannot provide much grip in vertical pipes.
	[11]	X	✓	X	✓	X		
	[25]	✓	X	X	✓	X		
	[26]	X	X	X	✓	X		
	[27]	X	X	X	✓	X		

2.6 Summary

This section described the work performed on the in-pipe cleaning and inspection robot. This study is on the mechanisms that were used for the pipe cleaning and inspection. Because of various types and sizes of pipe, many researchers have developed various types of techniques and methods for cleaning, inspection and locomotion. The literature study is on various techniques that were used successfully in motion control of the robot. In this various inspection methods are also discussed, that are going to be used for detection of flaws in pipe

3 CONCEPT DEVELOPMENT

Concept development is developing various types of concepts related to our work. After developing various concepts, we have to select the best concept among them.

3.1 Overview

Concept development is a very important stage in building a product. This stage includes various steps like

1. Research
2. Concept development and refining
3. Designing the computer model
4. Developing the prototype
5. Testing the prototype

The research stage is to study the various types of works that already performed on the related field. From this research we are going to understand the existing models and what has to be done.

When we are clear with the concept the next step is to design a computer model using CAD tools. It includes phases like material selection and analysis.

Developing a prototype is the very important stage. One can develop prototype using techniques like machining or 3D printing.

Testing the prototype in real environment is very important because we have to make sure the product is working properly.

This chapter will give information regarding the developed concepts and steps followed in achieving the final concept.

3.2 Concept 1-Primary Model

Many concepts have been developed but the first idea is to design an in-pipe robot which can perform cleaning with help of three dc motors and locomotion by using a two high torque dc motors. For automatic adjusting to pipe size we planned to use a piston cylinder mechanism. To inspect the in-pipe environment we planned to use a camera at the front portion of the in-pipe cleaning robot.

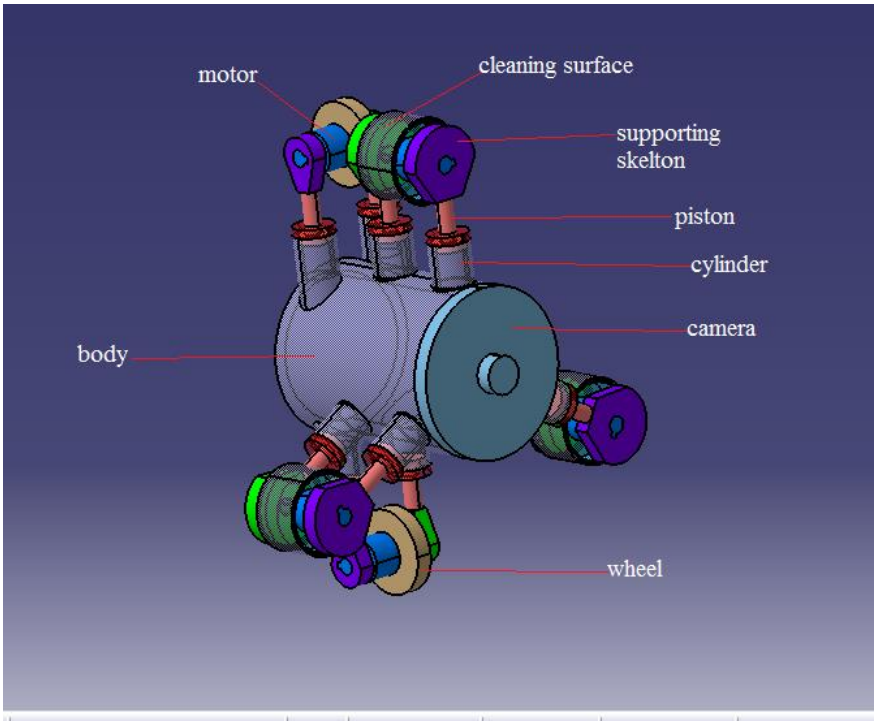

Fig 42 In-pipe cleaning robot

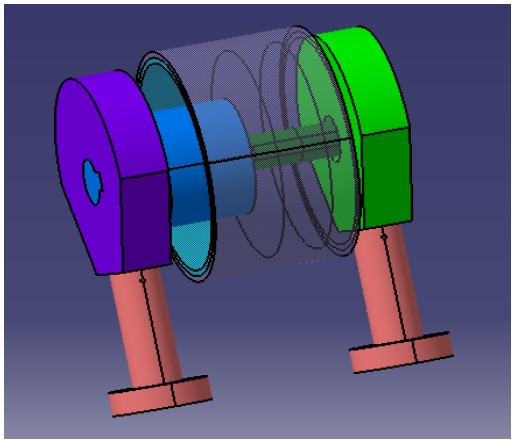

Fig 43 cleaning portion

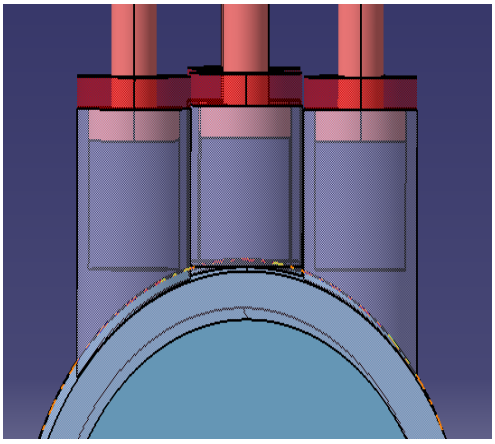

Fig 44 piston- cylinder mechanism

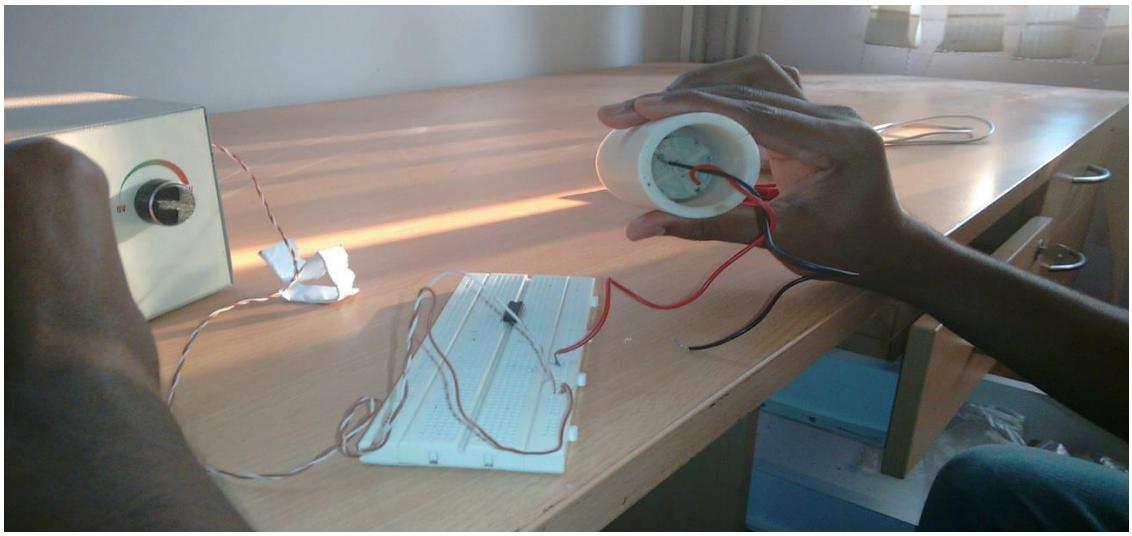

Fig 45 testing the prototype-1

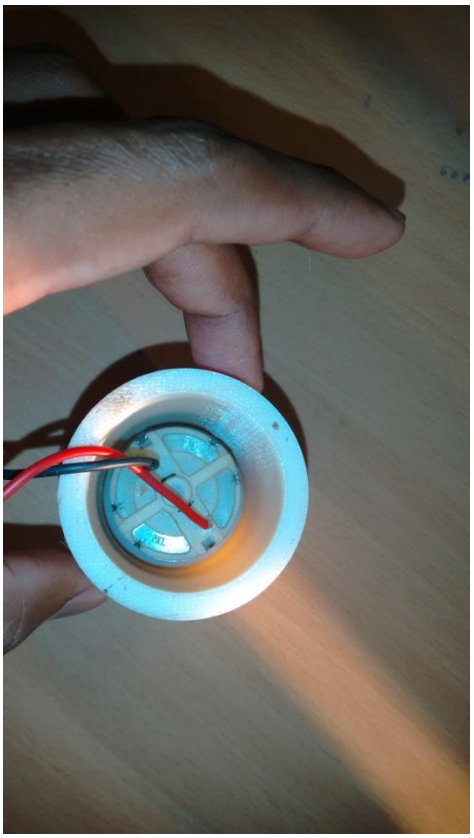

Fig 46 winding problem in prototype Fig 47 prototype testing

The above figures 45,46&47 showing prototype testing. It is also giving information about the defects in the design which are mention in the following points.

The designed model has many drawbacks like

1. Complex design
2. Single module
3. Too many electronic devices
4. Piston cylinder mechanism
5. Drag due to cleaning portion
6. Direction changes

Complex design

The above model is very complex in structure. Due to the complex structure the motors may not provide sufficient torque to the body to move forward and backward.

Single module

There are no separate modules for cleaning and locomotion. This is one of the major drawbacks in the model. Because of the single module while the cleaning is being performed there are chances in the power cables to get detached from the robot. Since my design is a wired one.

Many electronic devices

Many electronic devices are there in the robot. They are control circuit, DC motors and camera. As we know there are many types of corrosive substances in the pipe that is going to damage the electronic components.

Piston and cylinder mechanism

The piston and cylinder mechanism used for automatic adjustment to pipe size. The mechanism may not work properly because of the compressed gas used in it. The structure is also can't provide enough strength.

Drag caused by cleaning portion

Since the cleaning wheels are in the same axis to the pipe diameter, while cleaning they can do better cleaning. Coming to the locomotion of the robot in the pipe the cleaning wheels are going

to cause lot of drag to the robot. Because of it the robot may require high amount of torque to move in and out.

Direction change

There are many types of joints like T-joint, Y-joint, etc. and shapes like elbows in a pipe structure. Because we used a single module there is no such mechanism for direction changing which is very crucial in the pipe.

3.3 Concept 2-Final Model

This is the finally developed concept. In this the model is developed in such a way that it overcomes all most each and aspect of the previous design. The design is focused to use only one DC motor for both transmission and cleaning. There is a mechanism which uses a bevel gear to provide both locomotion and cleaning simultaneously. The piston cylinder mechanism is also used here but in a different manner.

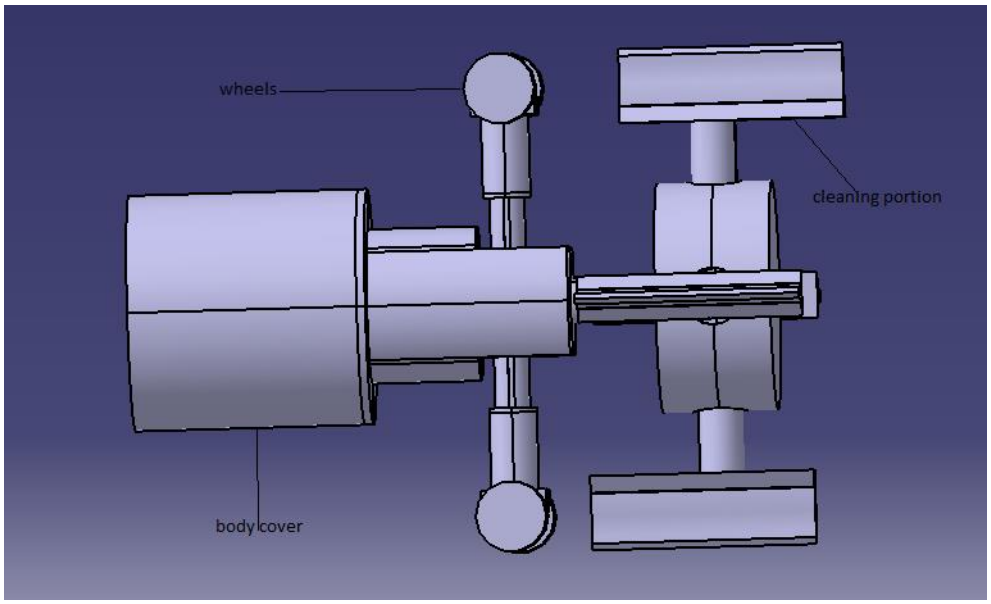

Fig 48 final in-pipe model

The above figure is the refined model of in-pipe cleaning robot. This model has the following advantages compared to the previous design.

Separate modules

The first and foremost advantage of this design is, here there are two separate modules for transmissions and cleaning. They are so called body and the cleaning portion. In the body module there will be high torque DC motor. By using the motor we can give power to the wheels and cleaning portion. Because of these two separate modules the body portion will provide enough anchoring point to the whole robot. There won't be any problem regarding the power supply cables because the body will not rotate while cleaning.

Electronic devices

We are using only one DC motor instead of 5 DC motors. This is saving a lot of space and money. Since the space is very limited in the pipe the new design is much beneficiary.

Shielding

We provided shielding to the motor in the body cover so there won't be problem regarding corrosion. The wet conditions in the pipe can't damage the motor.

Single mechanism for cleaning and moving

We used single mechanism for both cleaning and moving. The bevel gear mechanism is performing both cleaning and moving operations.

Drag problem

There is very less amount of drag caused by the cleaning portion. Instead of circular cleaning surface we used wipers. There is line contact in the wipers where as the contact is surface type in a circular brush.

Piston-cylinder mechanism

Piston-cylinder mechanism consists of springs instead of compressed gas. Because we used springs in the piston cylinder mechanism, there will better compression and expansion to the changes in the pipe size.

Inspection module

In place of a camera we are using the ultrasonic sensor for inspection. The ultrasonic sensor is comparatively cheap and it will give better inspection among all the sensors.

Universal joint

Direction change is very important in the pipes. The pipe will have various bends and joints for all this we need some mechanism in the robot. So for direction changes we can use a universal joint between the body and the cleaning portion. The universal joint is going to adjust to the pipe bends and provide very good locomotion.

3.4 Summary

This chapter is focused on the concept development. There are two concepts discussed in this chapter. The first concept is having some problems like the design, complexity, dragging, many electronic devices, lacking direction changing mechanism, cost, piston-cylinder mechanism, and power supply problem. To overcome the problems, the new model is focused on reducing the problems and various types of mechanisms have been included in the robot.

The new model contains two modules for cleaning and moving. The cleaning portion has less friction wipers. There is a universal joint in between the body and cleaning portion so that there will be automatic direction change in the robot. The robot will move according to the direction of the pipe.

In the new design a low-cost inspection system has been included for detecting the flaws. The new model contains only one DC motor for both locomotion and cleaning. The piston cylinder mechanism has spring in it for automatic adjustment to the pipe diameter.

4 EXPERIMENTAL ANALYSIS OF IN-PIPE ROBOT

4.1 Overview

Development of in pipe robot has been divided into several parts, they are

1. Computer aided design
2. Analyzing the design
3. Fabrication of prototype
4. Testing the prototype

Here we are going to discuss the prototype development. How it is made and controlled using the latest controllers are going to be discussed in this chapter.

4.2 Fabrication of Prototype

After the CATIA model is ready, the CATIA file is exported to the 3D printer. The printer is going to generate the 3D model of the design.

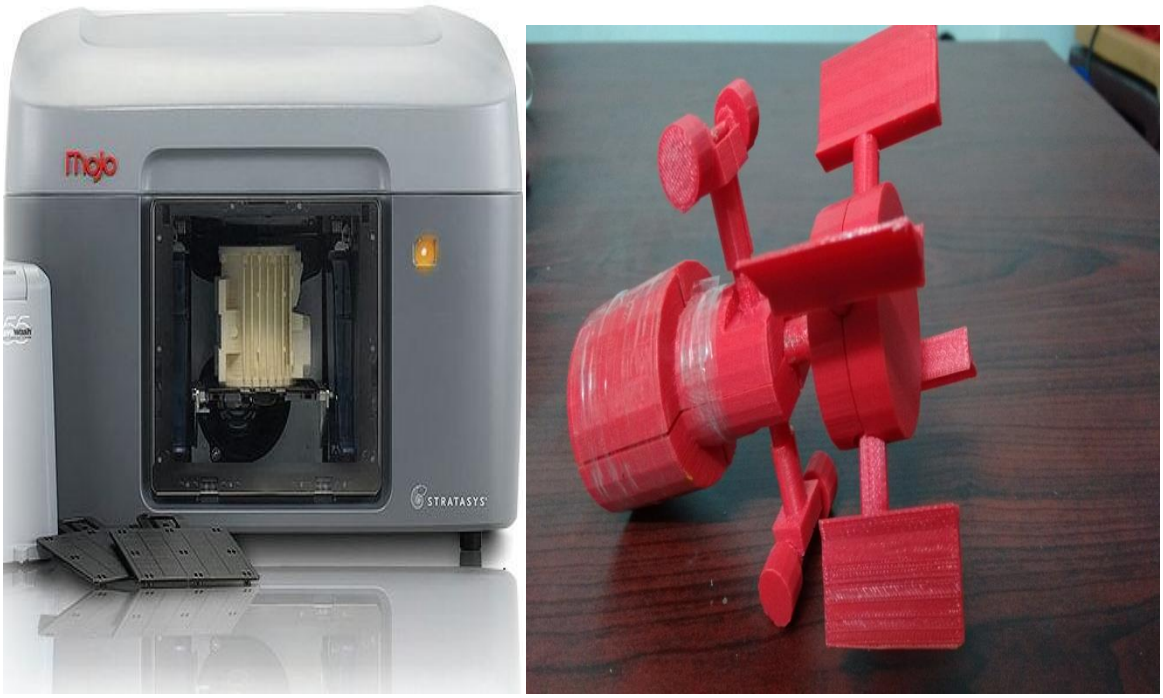

Fig 49 3D printer & fabricated model

4.3 Control Circuit of In-Pipe Robot

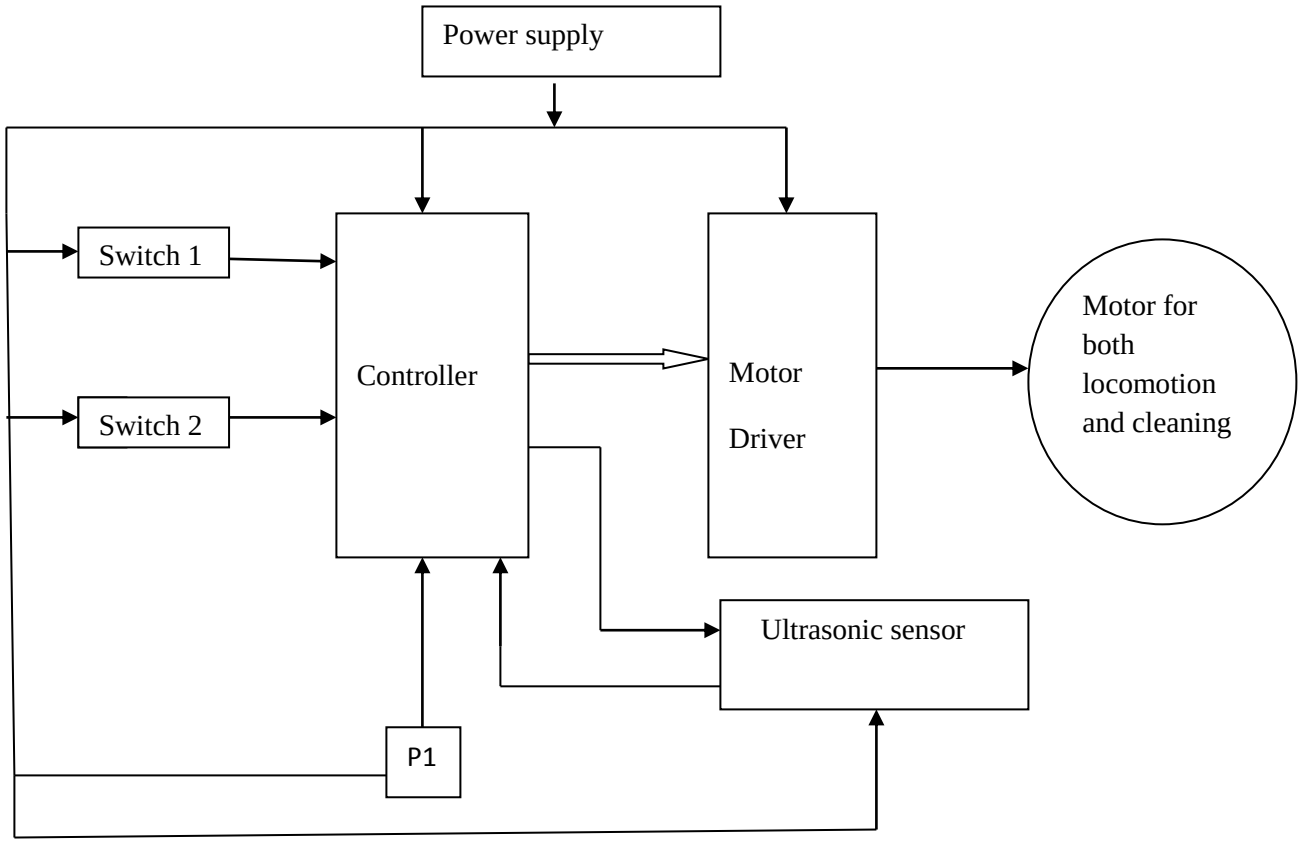

Fig 50 Pipeline cleaning robot control circuit

Figure 8 is showing the control circuit used for the in-pipe robot. The control is very simple and easy to operate. Even person with little knowledge in electronics can easily control the in-pipe robot. The control circuit has various components like

1. Controller
2. Ultrasonic sensor
3. DC motor
4. Motor driver
5. Potentiometer
6. Power supply
7. Switches

Controller

Controller is the major component in any control circuit. It is like brain of the body. The main concern in design is to provide a very simple controller. There are many types of controllers in the market but according to our need it should be compatible to all the components. When we are going to write the code for controlling the robot, it supposed to be easy. Hence we decided to use the arduino mega 2560 controller for the in-pipe robot.

The control is very is to handle. There are predefined slots for power supply, PWM, etc. so it will be very easy for us to make connection with the remaining components. The size of the controller is also very small and it can easily accommodate large number of devices. Coming to the coding part, it is open source to everyone. One can go through the site and can get the code. What we have to do is to make modification in the code according to our needs.

Ultrasonic sensor

The ultrasonic sensor is a simple device that is generally used for distance measurement. The working principle of the ultrasonic sensor is just like a bat. There are two portions in an ultrasonic sensor 1 trigger 2 echo. The trigger portion will emit the ultrasonic waves. When the ultrasonic waves hit some object in front of it, it will be reflected back to sensor.

The echo portion is going to receive the reflected ultrasonic waves. The time gap between the trigger signal and received signal is calculated and according that the distance between the sensor and obstacle is measured. The same principle has been used here to detect the obstacles in the pipe.

The main reason behind using the ultrasonic sensor in this in-pipe robot is the cost of the device is very less. The sensor is also very accurate compared to other devices.

DC motor

The motor is one of the major components in the control circuit. It is used to provide both transmission and cleaning. For performing the tasks it has to provide high amount torque. Since we require very high torque there is need to use a geared motor with low RPM. For this we are

using a 300 RPM geared motor. The motor is tested and is giving very good amount of torque. It can able provide cleaning and transmission.

Motor driver

Motor driver play a prominent role in controlling the DC motor. The motor driver helps in changing the direction of rotation of the DC motor. The driver is going to receive the signals from controller. According to control signal the driver is going to change direction of rotation. There will be H-Bridge in the motor driver which is making the task possible.

The working principle of the H-bridge is very simple. The construction is showed below. The direction of rotation of the motor depends on the flow of current in the motor. The motor driver is the main component that changes the flow of current according to the control signal.

Potentiometer

Speed is another important parameter in the in-pipe robot. The speed has to be controlled in order to achieve better cleaning and locomotion. It depends on the speed of rotation of the DC motor. So we have to control the speed of the motor in order to control the speed of robot transmission and cleaning. To control the speed we are using the potentiometer in our control circuit. The potentiometer is going to vary the resistance in the circuit. When there is change in resistance, according to that the amount of voltage or current changes. Depending upon the amount of current flow in the motor the speed of rotation will vary.

Power supply

Power supply is very important for electronic devices to function. In this all the components are of electronic background. So we are using the 5 volts DC power supply to all the components except the motor. The motor ratings are different compared to the other devices in the circuit. The motor requires 12 volts DC supply.

Switches

The switches S1 and S2 are used to give control signal to the robot. By using the switches we can make the robot to move in and out.

4.4 In-Pipe Inspection Using the Ultrasonic Sensor

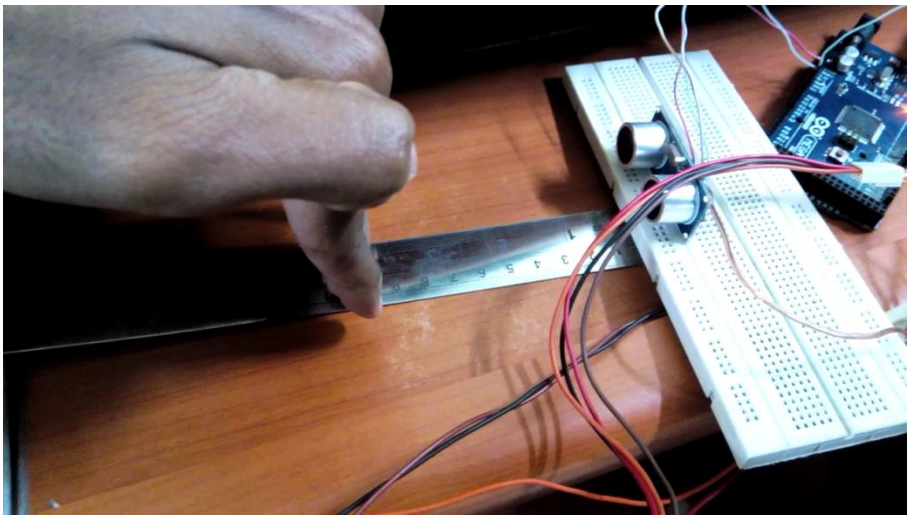

Fig 51 interfacing of ultrasonic sensor with Arduino controller

The above figure is showing the interfacing of ultrasonic sensor with arduino. The ultrasonic sensor used here is HC-SR04. There are four pins in the ultrasonic sensor, they are

1. Trigger
2. Echo
3. Vcc
4. Ground

Trigger

The trigger pin of the ultrasonic sensor is connected to the PWM pin of the ARDUINO controller. The function of the trigger pin is to send PWM (Pulse Width Modulation) to the trigger portion. The trigger will act as the output pin. When the trigger portion receives the PWM signal it starts sending the ultrasonic waves. The ultrasonic waves will hit the target or object.

Echo

The echo pin is connected to the PWM of the ARDUINO controller. The echo portion will receive the reflected waves that stroked the objects in its path. The time lag between the two waves that is the transmitted and received is measured. After calculating the time lag, the time lag is converted into distance.

Vcc (power)

The Vcc pin of the sensor is connected to the 5volts pin of the controller. The function of the Vcc pin is to supply 5volts DC supply to the ultrasonic sensor.

Ground

The ground pin is connected to the ground pin of the controller. Its function is to provide ground to the sensor.

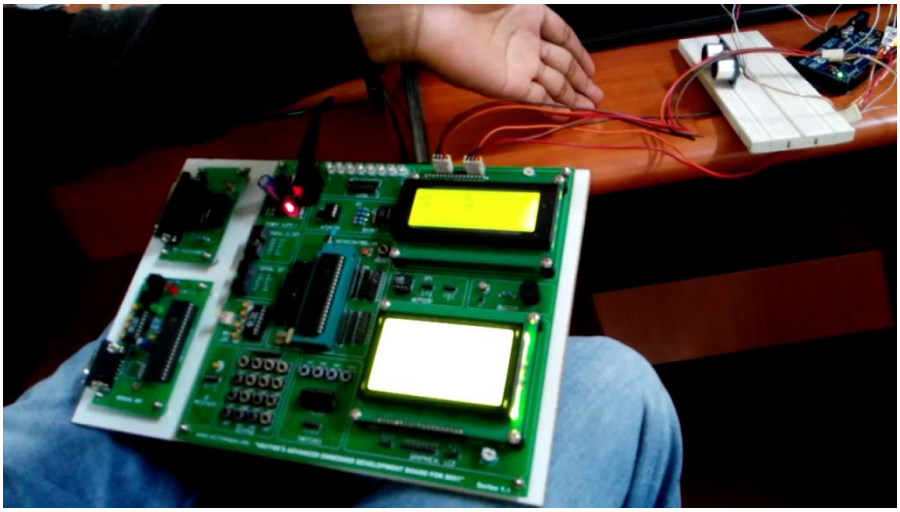

Fig 52 showing distance measured on the LCD screen

After all the data is processed the next step is to visualize the data on the display device. For that we are using the LCD (Liquid Crystal Display). This is very common display using now-a-days. The LCD is small in size and very easy to use. After calculating distance the controller is going to send the data to LCD from where the user can see the distance between the sensor and the object in front of it.

The maximum range of the sensor used in this project is 4 meters. So we can have better inspection in the range of 4 meters in the pipe. So the user can get information about obstacles, flaws, bends and joints in the pipe.

4.5 Motion Control of the In-Pipe Robot

Motion control is very important in the pipe cleaning robot. There are two ways adopted to control the motion of the in-pipe robot.

1. Fully automated motion control
2. Semi- automated motion control

Fully automated motion control

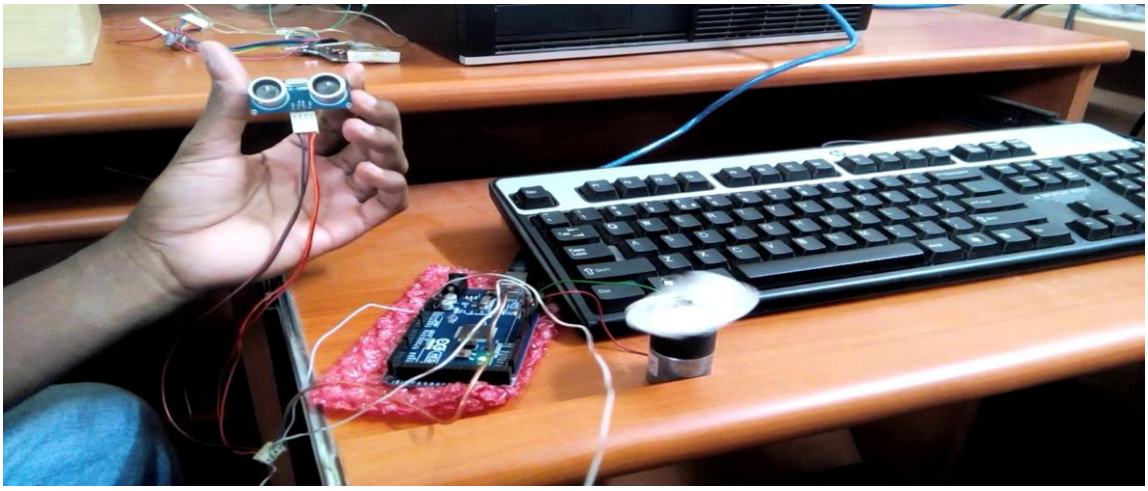

Fig 53 motion control using the ultrasonic sensor

The above figure is showing the motion control using the automated motion control. In the automated motion control, we are going to use a ultrasonic sensor. We are going to set a pre-defined distance vale between the sensor and obstacle. According to that the motor will rotate in clockwise or anti clockwise according to the priority given. For suppose the user has wrote the code like, if the distance value is less than the set distance, the motor should stop else move forward. Like that we can give our own priority. This method is useful to the fully automated in-pipe robot.

The major disadvantage using this method is the robot can’t able to differentiate between the accumulated waste materials and the bends or joints in the pipe. This leads to miscommunication and the robot can’t clean the pipe properly.

Semi-automated motion control:

The semi-automated motion control is the best way to control the motion of an in-pipe cleaning robot. The semi-automated way of motion control is a type of manual control. After seeing the distance between the obstacle and the robot, the user is going to control the motion of the robot in the pipe. According to the distance the user will make the robot to move forward, backward or stop. In the semi-automated control there are components like LCD device, Switches, DC motor and ultrasonic sensor. The user will give control action required through the switches S1 and S2.

4.6 Actuation and Control of Cleaning Task

Actuation

Actuator in this robot is a DC motor. The DC motor is actuating both the wheels and the cleaning portion.

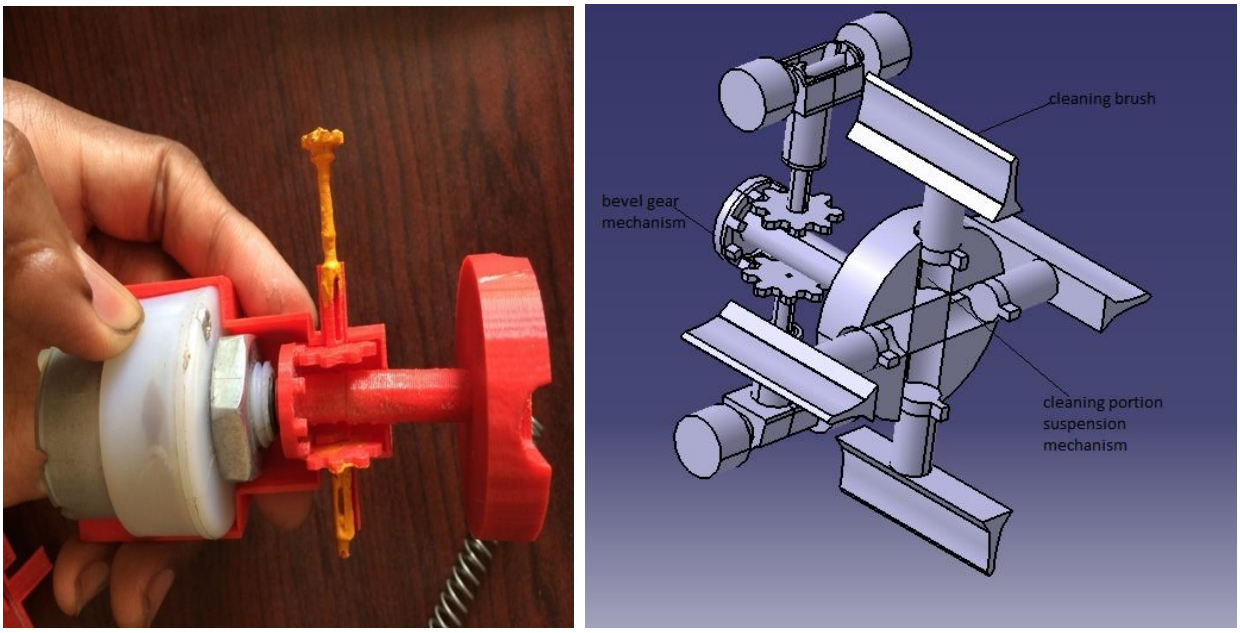

Fig 54 actuation part

The fig 54 is showing the whole setup of actuator. The dc motor is providing power to the bevel gear. The bevel gear is transmitting that power to both cleaning portion and to the wheels. The bevel gear is attaches to the main shaft that is connecting body and the cleaning portion.

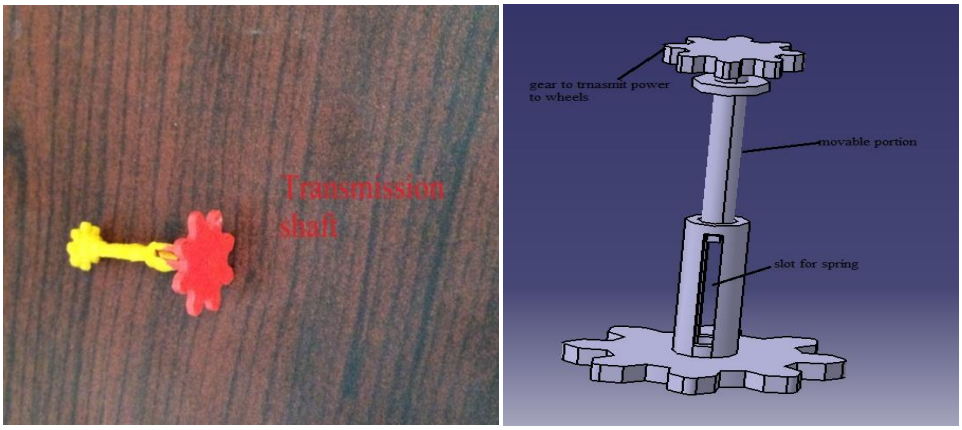

Fig 55 transmission shaft developed & CATIA models

The transmission shaft is to transmit the power to the wheels. There are two transmission shafts used in this model, one to upper wheels and second for the lower. The yellow portion of the transmission shaft is a sub-division of the shaft. That portion will be mounted on the spring provided in the shaft. That will compress and expand according to the pipe diameter. There is spur gear on the top of the movable portion which is to transform power to the wheels.

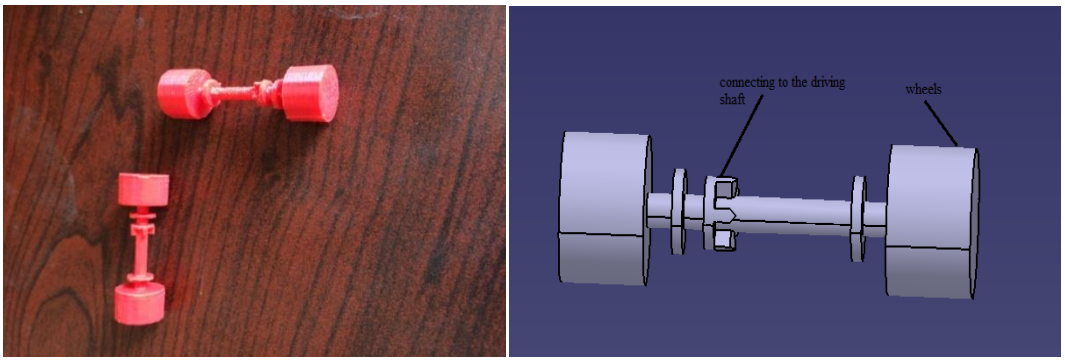

Fig 56 wheels for transmission fabricated and CATIA model

$$\frac{N1}{N2} = \frac{T2}{T1} = \frac{D2}{D1} \tag{4}$$

N1&N2 are speed of rotation of each gear

T1&T2 are number of tooth in each gear

D1&D2 are diameter of each gear

Fig 56 is showing the wheels for moving the robot in and out of the pipe. The main part of the wheel is the gear. The gear is connecting the wheels to the main body.

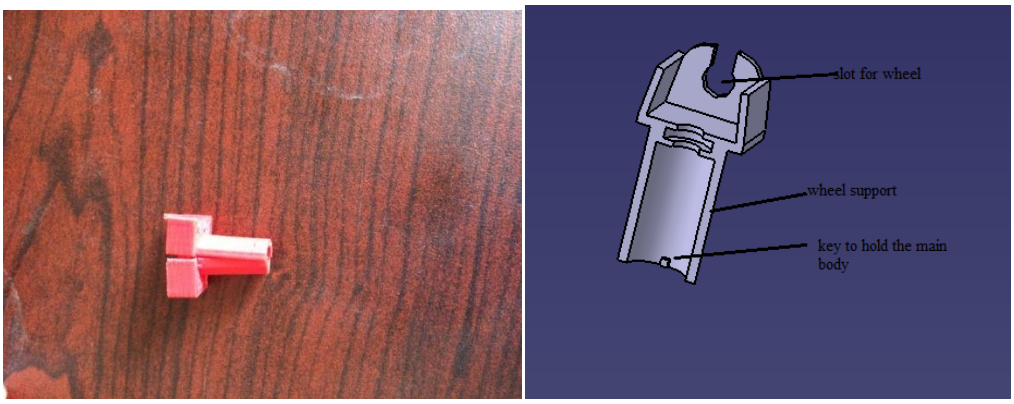

Fig 57 wheel support

The wheel support is used to keep the wheel in position. The wheel support has key that is designed to hold the main body. When the pipe diameter changes the wheel support also moves along with moving part of the driving shaft.

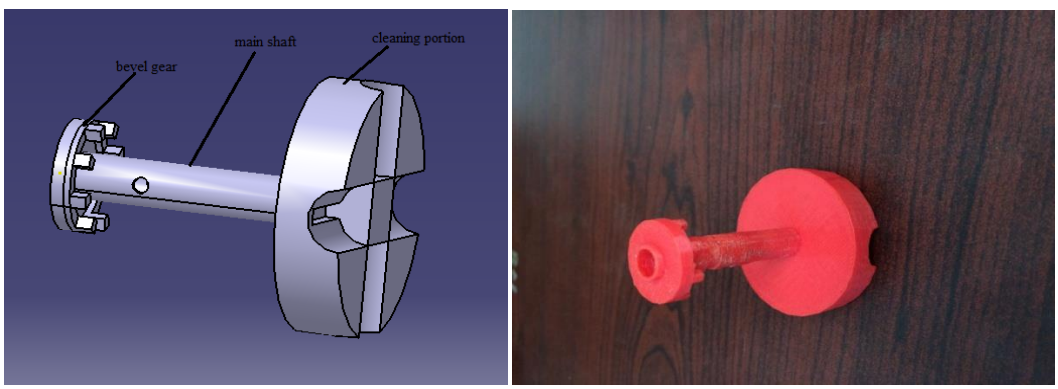

Fig 58 main shaft CATIA & fabricated model

The main shaft is the part that connects the cleaning portion and body. One end to the main shaft there is bevel gear. The other end has the cleaning portion. The main shaft has a slot for the motor spindle. It showed in figure 12 clearly. The main shaft is used to transfer power to cleaning portion.

Cleaning mechanism control

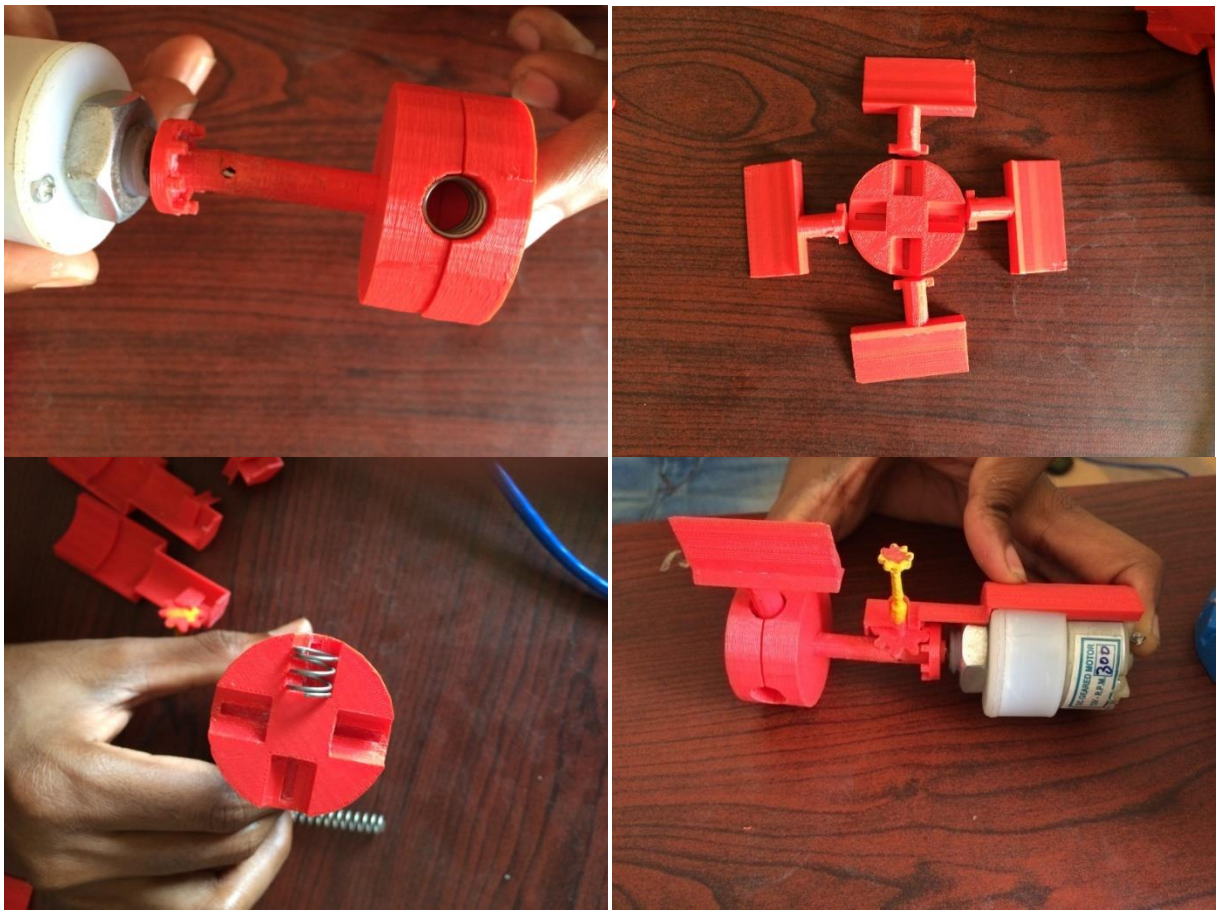

Fig 59 cleaning portion

The above figures are showing the cleaning portion of the in-pipe robot. The cleaning portion is fabricated in two modules for assembling purpose. There are four slots provided in the cleaning module. Inside each slot there is a spring which is used as a suspension mechanism.

The main part of the cleaning body is the cleaning wipers. We are using four cleaning wiper for better cleaning. The wipers will make a line contact with the inner surface of the pipe. The reason for using the wipers is that we can minimize the drag while robot is moving in the pipe. We can replace the wipers with new one when it got damaged. Depending on the type of pipe, the wipers can be replaced with other type of cleaning brush.

4.7 Summary

In this chapter various stages of development of in-pipe robot has been discussed. This unit is giving information about fabrication, motion control, inspection using the sensor and actuation and cleaning control. The use of 3D printer made the fabrication vary easy. Because the parts are complex structures it is very difficult to made using the other machining methods. The 3D printer reduced the cost of material and time. Not only the cost and time but also the printed parts by the 3D printer are very accurate. The only problem with the printer is with the small parts fabricated using it. Since the parts are small it is very difficult to remove the support material used while printing.

Coming to the motion and the cleaning task control we used a single high torque DC motor. The motor is able provide good amount of power to wheels as well as the cleaning unit. The in-pipe inspection is possible with the help of ultrasonic sensor. The sensor is able to provide very accurate readings of distance between the robot and the obstacle. The used ultrasonic sensor is able provide accurate readings up to the range of 4 meters.

Actuation to the robots cleaning and moving parts are provided by motor using bevel gear mechanism. It is the most important mechanism used for the in-pipe robot. The mechanism is very simple in working and also it is very accurate.

The suspension system used here is piston-cylinder mechanism. The cylinder is provided with a spring of suitable force. The piston contains the cleaning portion as well as the moving portion. The end portion of the piston in the cleaning portion contains the end effecter. The end effecter will be in continuous contact with the inner pipe walls because of the springs. Due to this system there will be ample force provided to the cleaning and moving parts of the robot. Due this there won’t be backlash in the wheels and also on the cleaning part.

5 RESULTAS & DISCUSSION

5.1 Overview

In this chapter we are going to discuss the results obtained. It includes contribution of robot in better cleaning and inspection. We are also going to discuss the reason and drawbacks in the fabricated model.

5.2 In-Pipe Robot for Cleaning and Inspection

1. The robot is designed for pipe with diameters ranging from 70mm to 80mm.The designed model is going to perform the cleaning and inspection tasks in the pipes with diameter in that range only. We the design is very flexible that we can able to perform tasks with minimum of 70mm to a large size pipes. By increasing the spring slot and the cleaning wiper length we can able clean the large pipes. To increase the wheel length the same procedure has to be followed.
2. Inspection by using ultrasonic sensor is giving accurate distance between robot and the obstacles. The ultrasonic sensor is able calculate the distance between the bends and joints in the pipe. It is also able to detect the flaws in the pipe. The ultrasonic sensor is able detect the flaws up to 2.3 meters only in the pipe environment. The minimum operating flaw diameter is 10 mm.

3. The bevel gear mechanisms is working for both transmission and cleaning when compared with sun gear mechanism. The gear mechanism designed here is able lock the tooth better. The speed of wheel is 122 RPM for maximum input of 360 RPM.

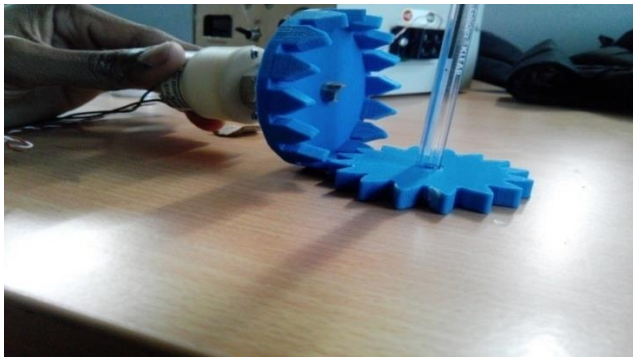

Fig 60 testing of bevel gear mechanism

4. Simulation is performed in CATIA workbench.

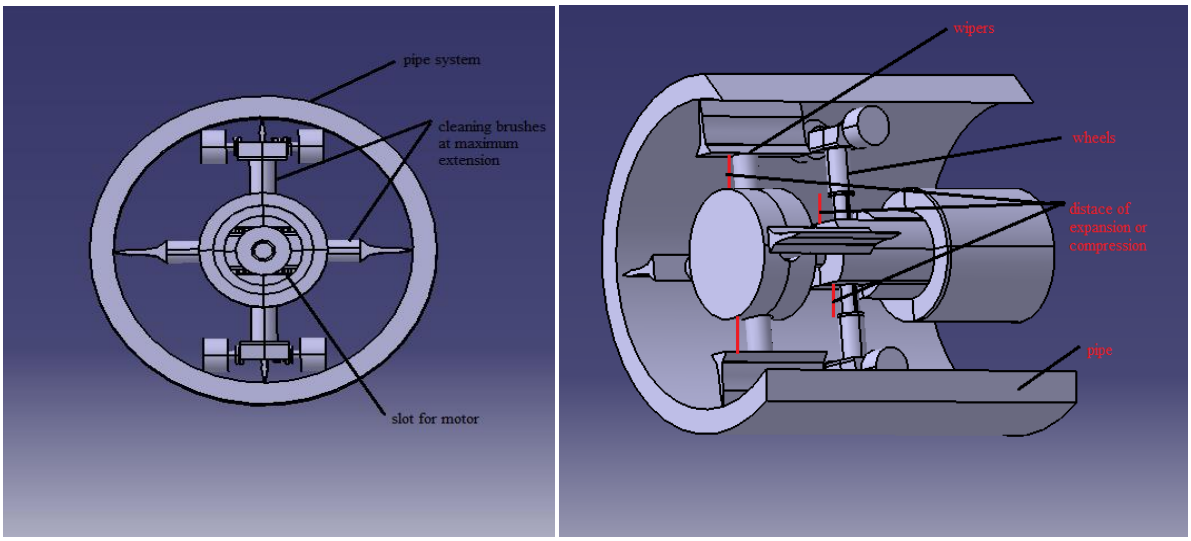

Fig 61 fully expanded robot in pipe

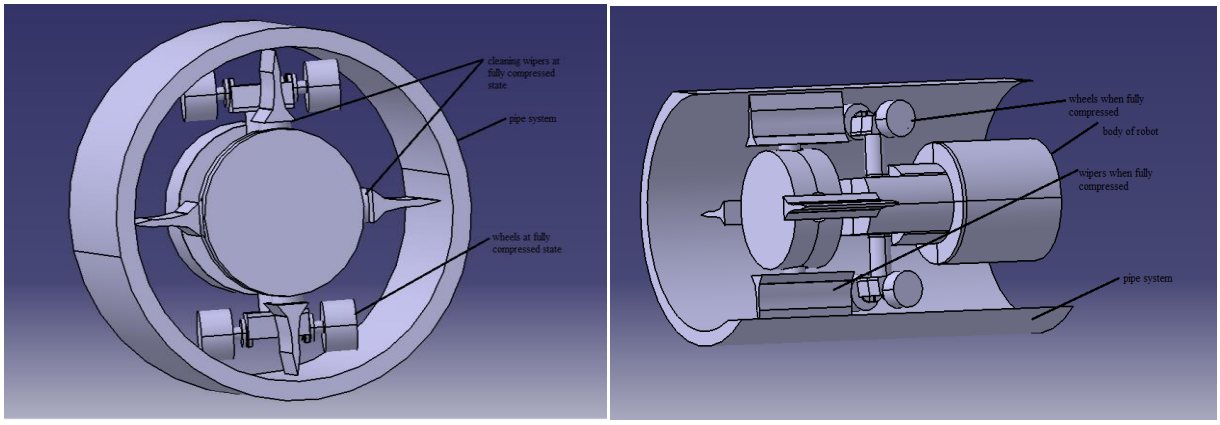

Fig 62 fully compressed robot in pipe

6. The cleaning mechanism is working properly showed in the figures 64 & 65. It is able to adjust and clean the pipe with changing diameters.

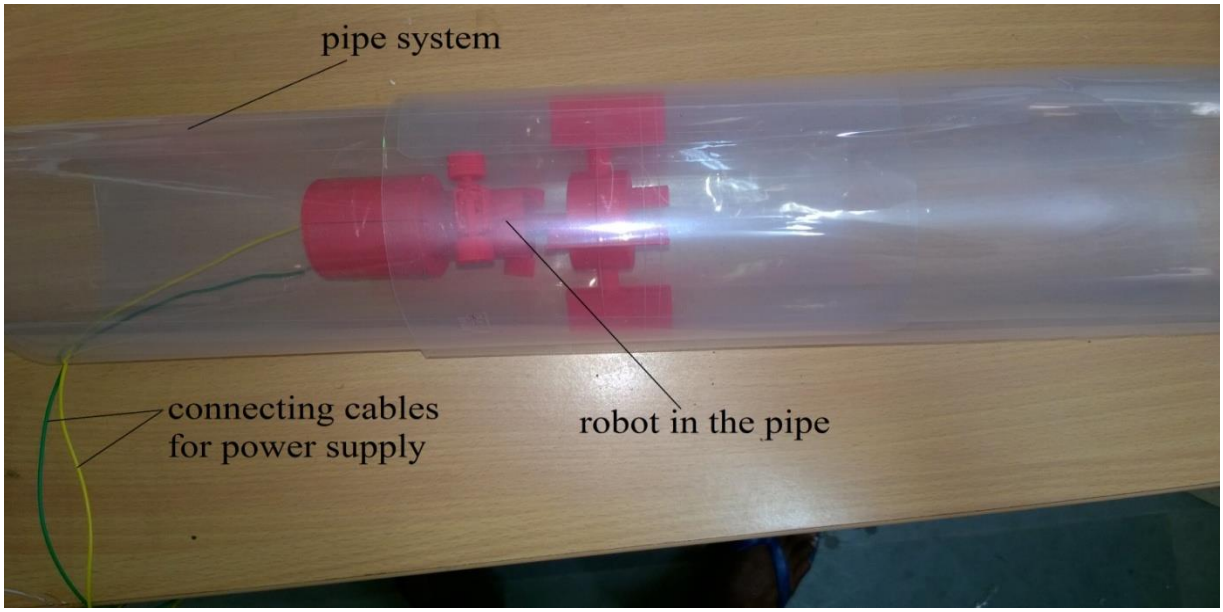

Fig 63 robot inside a pipe

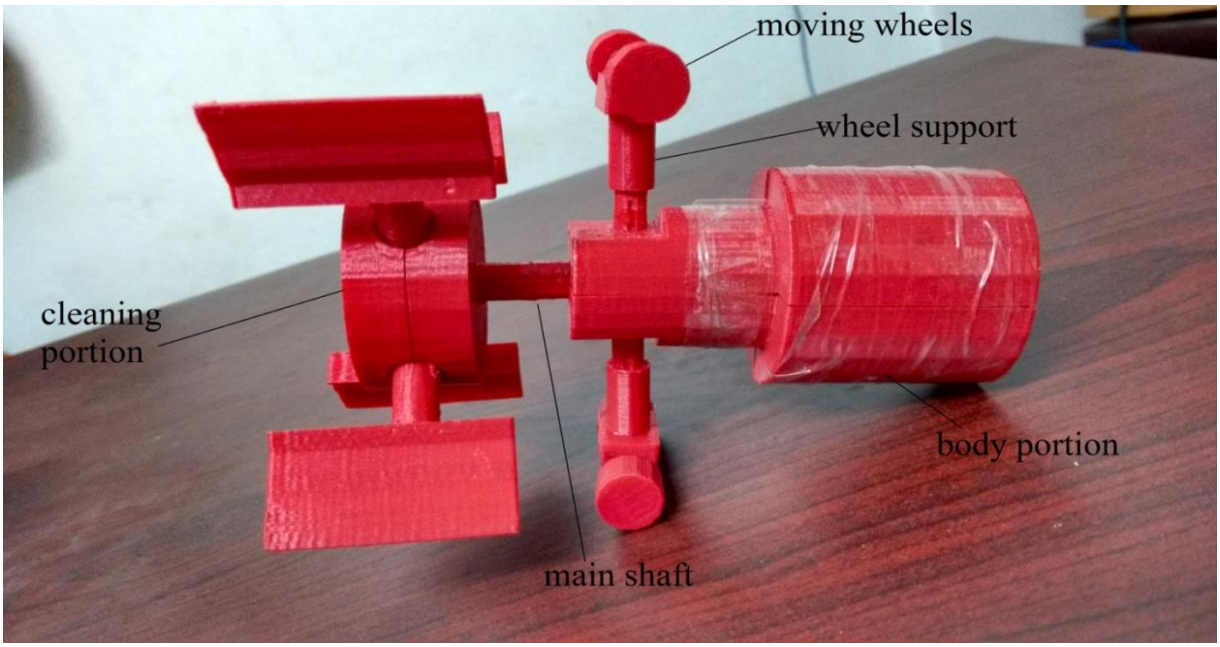

Fig 64 showing the body cover of the robot.

5.3 Discussion

The use of ultrasonic sensor of inspection is providing better results compared to the other sensors. The sensor used is also very cheap. We can able replace the sensor easily when got damaged. It was very good at detecting the cracks in the pipes.

The designed prototype is one of the best models for all types of pipes. It can able to clean the pipes with diameters ranging from few millimeters to several meters. The only thing we have to do is just scale the design according to the need.

The suspension mechanism used in the cleaning portion is very simple mechanism. It contains simple springs for compression and extension. But coming to the suspension system used in the wheel portion is a very genius design. The system was able move and make adjustment to the change in the pipe sizes simultaneously.

The cleaning wipers used are able provide very less drag while moving. They are so designed that it can able clean a large portion in very less time. The bevel gear mechanism is the best suitable mechanism used for this robot. The mechanism is very accurate in providing cleaning and moving.

5.4 Summary

This chapter provided discussed the results obtained. The design model can easily pipes from 70mm to 80 mm in diameter. There are various mechanisms used but the final suitable mechanism for actuation is the bevel gear mechanism. The ultrasonic sensor is very accurate in detecting the flaws in the pipe. It can easily give information of inner surface of with up to distance of 3.6 meters.

The 300RPM DC motor used in this robot is good enough to provide high torque. The body cover is providing excellent insulation to the motor. It makes the robot to sustain for long time. The wall-pressed in-pipe robot can provide better anchoring robot to keep in position.

6 CONCLUSION AND FUTURE WORK

6.1 Conclusion

The work performed in this project is to develop a wall-pressed in-pipe robot for cleaning and inspection. In developing the wall-pressed in-pipe robot we require various mechanisms for cleaning, moving, actuation and inspection. For cleaning there are four cleaning wipers mounted on the cleaning portion. The wipers are self-adjustable according to the size of the pipe. The cleaning portion contains springs for automatic adjustment. There are two wheels in the system for moving the robot in and out of the pipe. The wheels are mounted on the wheel support. The wheel support is placed on the body. The suspension spindle in the drive shaft makes the wheels to self-adjust according to the pipe diameter.

The actuation part of the robot has two actuators. One is an electronic actuator that is a DC motor. The second one is a mechanical actuator that is a bevel gear. The motor is connected to the bevel gear. The bevel gear is actuating both the wheels and the cleaning device of the robot.

For the inspection there is an ultrasonic sensor included in the robot. The main reason behind using the ultrasonic sensor is its accuracy in detecting the flaws in the pipe. The device is also very small so we can easily use the ultrasonic sensor for small size pipes.

6.2 Future Work

This project focused on developing a wall-pressed semi-automated robot for in-pipe inspection and cleaning. The future work has to focus on other suspension mechanism which uses actuators like hydraulic, or pneumatic for large diameter pipes. The cleaning wiper has to be exchanged with some other cleaning device.

The user may confuse with the distance given by the ultrasonic sensor. So we should use other indicating device along with the sensor. Gear like worm gears should be used for changing the ratio of cleaning and moving in the pipe. Since both are simultaneous sometimes we can’t able to clean some portions due to more speed of wheels.

REFERENCES

[1] Balaguer, C., Montero, R., Victores, J. G., Martínez, S., & Jardón, A. Past, Present and Future of Robotic Tunnel Inspection, Automation in Construction, In Press, doi:10.1016/j.autcon.2015.02.003.

[2] Li, Z., Zhu, J., He, C., & Wang, W. (2009, August). A new pipe cleaning and inspection robot with active pipe-diameter adaptability based on ATmega64. In Electronic Measurement & Instruments, 2009. ICEMI'09. 9th International Conference on (pp. 2-616). IEEE.

[3] Landsberger, S. E., Sundra, R., Short, D. B., & Martin, B. F. (1993).Cable crawling underwater inspection and cleaning robot. U.S. Patent No. 5,203,646. Washington, DC: U.S. Patent and Trademark Office.

[4] Virgala, I., Gmiterko, A., & Kelemen, M. (2013). Motion Analysis of In-pipe Robot Based on SMA Spring Actuator. Journal of Automation and Control, 1(1), 21-25.

[5] Canavese, G., Scaltrito, L., Ferrero, S., Pirri, C. F., Cocuzza, M., Pirola, M.,& Di Lullo, A. (2015). A novel smart caliper foam PIG for low-cost pipeline inspection—Part A: Design and laboratory characterization. Journal of Petroleum Science and Engineering, 127, 311-317.

[6] Chen, Y., Shao, J., Zhang, C., Fu, C., & Chen, K. (2009, June). Redundant-robot-based painting system for variable cross-section S-shape pipe. In Reconfigurable Mechanisms and Robots, 2009. ReMAR 2009. ASME/IFToMM International Conference on (pp. 743-749). IEEE.

[7] Saenz, J., Elkmann, N., Stuerze, T., Kutzner, S., & Althoff, H. (2010, October). Robotic systems for cleaning and inspection of large concrete pipes. In Applied Robotics for the Power Industry (CARPI), 2010 1st International Conference on (pp. 1-7).

[8] Atwood, C. C., Juchniewicz, R. P., Kratzer, E., Slifko, A., & Johns, P. J. (2013).Device for pipe inspection and method of using same. U.S. Patent No. 8,525,124. Washington, DC: U.S. Patent and Trademark Office.

[9] Choi, H. R., & Ryew, S. M. (2002). Robotic system with active steering capability for internal inspection of urban gas pipelines. Mechatronics, 12(5), 713-736.

[10] Qi, H., Zhang, X., Chen, H., & Ye, J. (2009). Tracing and localization system for pipeline robot. Mechatronics, 19(1), 76-84.

[11] Okamoto, J., Adamowski, J. C., Tsuzuki, M. S., Buiochi, F., & Camerini, C. S. (1999). Autonomous system for oil pipelines inspection. Mechatronics, 9(7), 731-743.

[12] Cordes, S., Berns, K., Eberl, M., Ilg, W., & Suna, R. (1997). Autonomous sewer inspection with a wheeled, multiarticulated robot. Robotics and Autonomous Systems, 21(1), 123-135.

[13] Langley, R. M., Carmichael, J. D., Paulley, D., Haworth, C. F., Carter, J. D., Huggins, J. A., & Roberts, K. (2006).Internal field joint inspection robot. U.S. Patent No. 7,077,020. Washington, DC: U.S. Patent and Trademark Office.

[14] Truong-Thinh, N., Ngoc-Phuong, N., & Phuoc-Tho, T. (2011, December). A study of pipe-cleaning and inspection robot. In Robotics and Biomimetics (ROBIO), 2011 IEEE International Conference on (pp. 2593-2598). IEEE.

[15] Kim, J. H., Sharma, G., & Iyengar, S. S. (2010, March). FAMPER: A fully autonomous mobile robot for pipeline exploration. In Industrial Technology (ICIT), 2010 IEEE International Conference on (pp. 517-523). IEEE.

[16] Zhang, Y., & Yan, G. (2007). In-pipe inspection robot with active pipe-diameter adaptability and automatic tractive force adjusting. Mechanism and Machine Theory, 42(12), 1618-1631.

[17] Bauer, J. (2013).Milling robot for processing the internal walls of inaccessible pipelines. U.S. Patent No. 8,573,889. Washington, DC: U.S. Patent and Trademark Office.

[18] Elkmann, N., Althoff, H., Kutzner, S., Stürze, T., Saenz, J., & Reimann, B. (2007, April). Development of fully automatic inspection systems for large underground concrete pipes partially filled with wastewater. In Robotics and Automation, 2007 IEEE International Conference on (pp. 130-135). IEEE.

[19] Langley, R., Huggins, J. A., Carter, J. D., Paulley, D., Roberts, K. R., Davis, D. L., ... & Lindemann, J. D. (2014).Internal pipe coating inspection robot. U.S. Patent No. 8,633,713. Washington, DC: U.S. Patent and Trademark Office.

[20] Meng, C., Wang, Q., Song, Y., Cao, Y., Zhao, N., & Shi, Y. (2015). Experimental study on both cleaning effect and motion performance of the duct-cleaning robot. Sustainable Cities and Society, 14, 64-69.

[21] Jung, C. D., Chung, W. J., Ahn, J. S., Kim, M. S., Shin, G. S., & Kwon, S. J. (2011, August). Optimal mechanism design of in-pipe cleaning robot. In Mechatronics and Automation (ICMA), 2011 International Conference on (pp. 1327-1332). IEEE.

[22] Ghorbel, F. H., Dabney, J. B., Steger, J. R., Thomas, C. A., Spanos, D. P., Lowry, N. C., & Seto, B. W. (2007).Autonomous robotic crawler for in-pipe inspection. U.S. Patent No. 7,210,364. Washington, DC: U.S. Patent and Trademark Office.

[23]Huxiong, H. (2014).Round pipeline cleaning robot. Patent publication number CN203380158U.

[24] Lim, J., Park, H., An, J., Hong, Y. S., Kim, B., & Yi, B. J. (2008). One pneumatic line based inchworm-like micro robot for half-inch pipe inspection. Mechatronics, 18(7), 315-322.

[25] Ramella, C., Canavese, G., Corbellini, S., Pirola, M., Cocuzza, M., Scaltrito, L., & DiLullo, A. (2014). A novel smart caliper foam PIG for low-cost pipeline inspection–Part B: Field test and data processing. Journal of Petroleum Science and Engineering. Chicago.

[26] Li, X., Zhang, S., Liu, S., Jiao, Q., & Dai, L. (2015). An experimental evaluation of the probe dynamics as a probe PIG inspects internal convex defects in oil and gas pipelines. Measurement, 63, 49-60.

[27] Zhang, H., Zhang, S., Liu, S., Wang, Y., & Lin, L. (2015). Measurement and analysis of friction and dynamic characteristics of PIG's sealing disc passing through girth weld in oil and gas pipeline. Measurement, 64, 112-122.

[28] La, J. H. H. Self-propelled sewer pipe cleaning apparatus.Self-propelled sewer pipe cleaning apparatus. U.S. Patent 2,858,556, issued November 4, 1958.

[29] Dhananchezhiyan, P., Hiremath, S. S., Singaperumal, M., & Ramakrishnan, R. (2013). Design and Development of a Reconfigurable Type Autonomous Sewage Cleaning Mobile Manipulator. Procedia Engineering, 64, 1464-1473.

[30] Langley, R., Huggins, J. A., Carter, J. D., Paulley, D., Roberts, K. R., Davis, D. L., ... & Lindemann, J. D. (2014).Pipeline internal field joint cleaning, coating, and inspection robot. U.S. Patent No. 8,800,396. Washington, DC: U.S. Patent and Trademark Office.

[31] Yusoff, M. F., Ibrahim, B. S. K. K., Hamzah, H., & Kadir, H. A. (2012). Development of Air Conditional Route Wireless Inspection Robot. Procedia Engineering, 41, 874-880.

[32] Lynch, J. (2013).Gutter cleaning robot. U.S. Patent No. 8,453,289. Washington, DC: U.S. Patent and Trademark Office.

[33] Huxiong, H. (2013).Swing-type pipe cleaning robot. Patent publication number CN203426112U.

[34] Liu, B. (2008).Robot for cleaning pipeline.Patent publication number CN201159364 Y.

[35] Tong, D. & Feng, Q. L. (2013).Concentrated air conditioner pipeline cleaning robot. Patent publication number CN203108891U.

[36] Chiu, Y. Li. A.,& Wei, Bin-Bin. (2013).Driving device for pipeline cleaning robot. Patent publication number CN203227646U.

[37] Nance, T. A., Vrettos, N. J., Krementz, D., & Marzolf, A. D. (2011). Robotic platform for travelling on vertical piping network. U.S. Patent publication number US20130025947

[38] Ye, C., Ma, S., Li, H., & Yang, J. (2010, December). Development of a pipe cleaning robot for air conditioning system. In Robotics and Biomimetics (ROBIO), 2010 IEEE International Conference on (pp. 1525-1529). IEEE.

[39] Kim, Y. W., Kim, E. Y., Jang, B. T., & Jeong, S. Y. (2013).Pipe cleaning robot. U.S. Patent Application 14/066,026.

[40] Zhou, Y. S., Lin, S.T., & Lam, R. (2012).Water pipe cleaning robot. Patent publication number CN102784771A

[41] Yang, H. S., & Jeon, W. S. (2012).In-pipe inspection robot. U.S. Patent Application 13/605,667.

[42] Deepak, B. B. V. L., Parhi, D. R., & Jha, A. K. (2011). Kinematic Model of Wheeled Mobile Robots. International Journal on Recent Trends in Engineering & Technology, 5(4).