MINISTRY OF EDUCATION AND SCIENCE OF UKRAINE

O. M. BEKETOV NATIONAL UNIVERSITY
of URBAN ECONOMY in KHARKIV

Methodological guidelines
for independent work
on the subject

ENGINEERING GRAPHICS

(for Ist-year full-time and part-time students education level "bachelor"
specialty 241 – Hotel and Restaurant Business)

Kharkiv – O. M. Beketov NUUE – 2016

Methodological Guidelines for Independent Work on the Subject “Engineering and computer graphics” (for Ist-year full-time and part-time students education level “bachelor” specialty 241 – Hotel and Restaurant Business) / O. M. Beketov National University of Urban Economy in Kharkiv ; com. : M. A. Liubchenko, T. P. Demidenko. – Kharkiv : O. M. Beketov NUUE, 2016. – 54 p.

Compilers: M. A. Liubchenko,
T. P. Demidenko

Reviewer Cand. of Engineering Science V. I. Lus

Recommended by the department of engineering and computer graphics, record № 11 on 24. 06. 2014.

CONTENTS

The aim of the works 4

1 THREE-DIMENSIONAL MODEL IN A COMPAS-3D 5

1.1 Compas-3D Main Window 5

1.2 Creating a 3D Model 10

1.3 Editing the Model 15

2 CONSTRUCTION DRAWINGS 17

2.1 General information about the construction drawings 17

2.2 Structural elements of buildings and schemes 19

2.3 Graphic images on the construction drawings. Door and Window Symbols 23

3 CONSTRUCTION DRAWINGS AND ELEMENTS OF THE BUILDING 28

3.1 Drawings of the building plan 28

3.2 Section drawings 30

3.3 Elevation drawings 32

3.4 Computer drawing of the building 34

APPENDIX 36

The tasks 36

Example of the drawing floor plan 51

Example of the section drawing 52

Example of the elevation drawing 53

REFERENS 54

The aim of the works

The present methodical instructions are developed for students of Hotel and Restaurant Business specialties. Optional tasks, requirements to registration and amount of work are formulated, short explanations to implementation of drawings are given and the list of references which should be used when performing provided tasks. The aim of the work – to teach the student to use opportunities of the graphic editor when modeling geometrical objects, to read the construction plan and to make out expert brand drawings according to state standard specifications with the help of the graphic COMPAS editor.

When performing a task of the first module the student has to draw the part sketch from nature, simulate according to the sketch a part by means of the graphic COMPAS editor and on ready model to construct the part drawing.

The task of the second module shares on two parts. In the first part the student, using drawings and the description of constructive elements of the building, taken from this methodical grant according to the number of option has to execute the building plan sketch. The sketch is carried out in a pencil on a leaf of a Whatman paper of the format A-3 on the scale of 1:100. The sketch should be carried out according to the general rules of graphic registration of construction plans (GOST 21.501–80; GOST 2.303–68; GOST 2.307–68; GOST 21.105–79; GOST 2.105-79). The second part of a task provides implementation of the drawing of the building plan according to the ready sketch and performance of an elevation and a building section by means of the graphic COMPAS editor.

1 THREE-DIMENSIONAL MODEL IN A COMPAS-3D

1.1 Compas-3D Main Window

1.2 Creating a 3D Model

1.3 Editing the Model

1.1 Compas-3D Main Window

It is necessary to open a document by pressing the New – Part. Solid 3D model consists of some 3D elements, which form faces, edges, vertexes, origin, planes in it.

Let us observe more in part separate elements of the interface of the main window.

The Main Menu which is in the overhead part of a window under title by the form does not differ from a menu toolbar at flat modeling (Fig. 1.1).

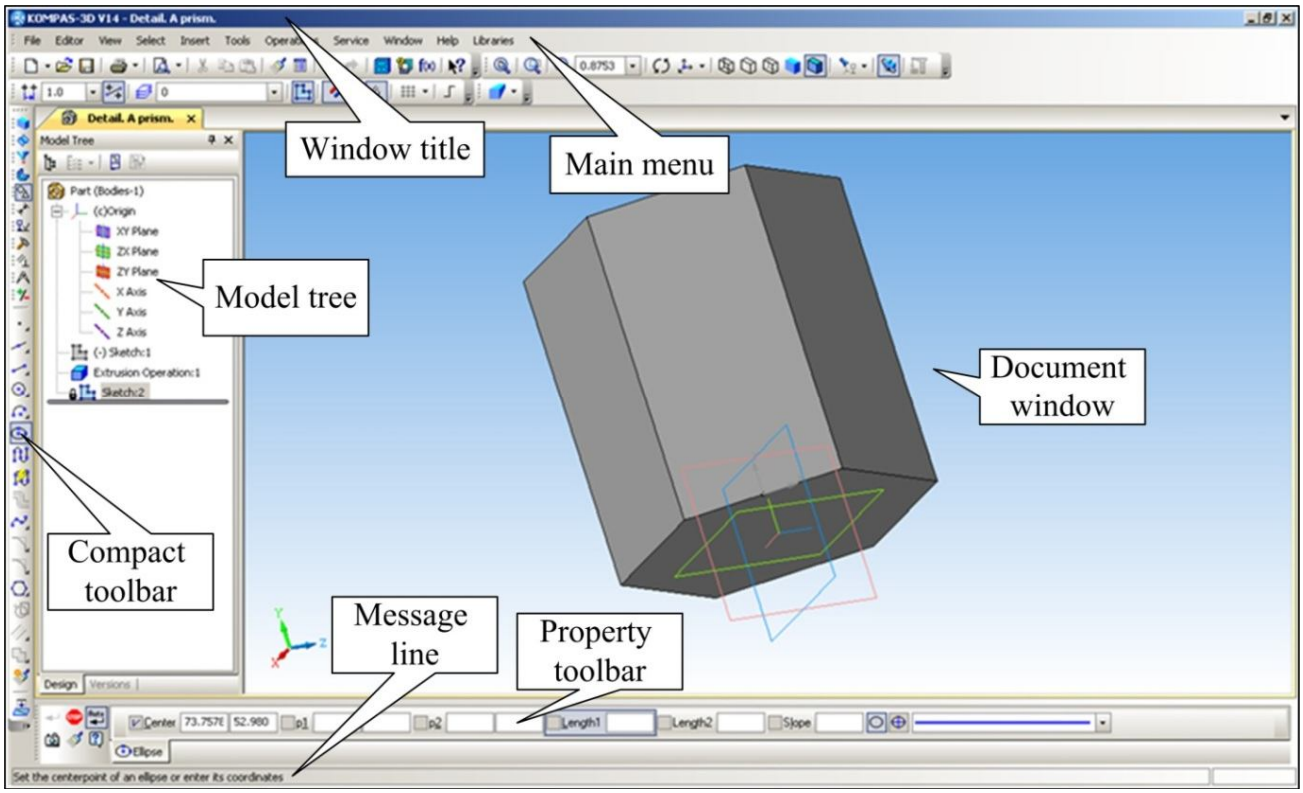

Figure 1.1 – Main window

Each menu contains the related commands and it will be observed later.

On a Control Panel are placed the most often used commands (Fig. 1.2, 1.3).

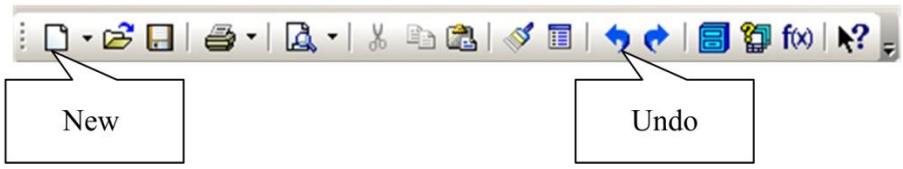

Figure 1.2 – Standart toolbar

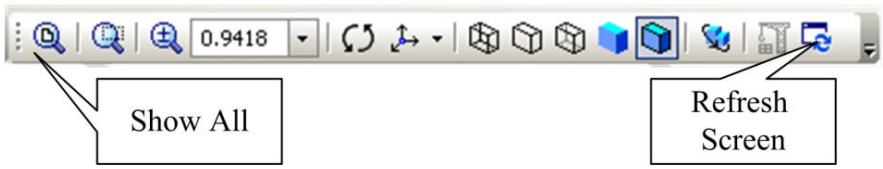

Figure 1.3 – View bar

The most part of the Main Window is occupied with a Document Window in which the image of an open part takes places. In this window all operations on construction and model editing are carried out.

In Model Tree the sequence of operations of formation of model are represented and displayed: The name of a part, a plane in which sketches for formation of elements of a part are under construction, a symbol of the origin of coordinates and sketches (Fig. 1.4).

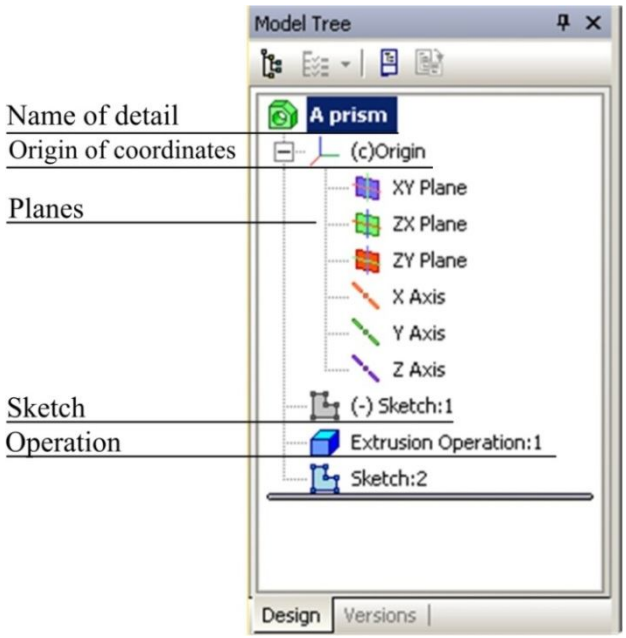

Figure 1.4 – Model tree

There is Message Line in Property Toolbar. In Message Line various system messages and inquiries are imaged. One or more tabs are located on it, as well as Advanced Control Panel.

Message line is located in the bottom part of application window. Various system messages and queries are displayed there (Fig. 1.5).

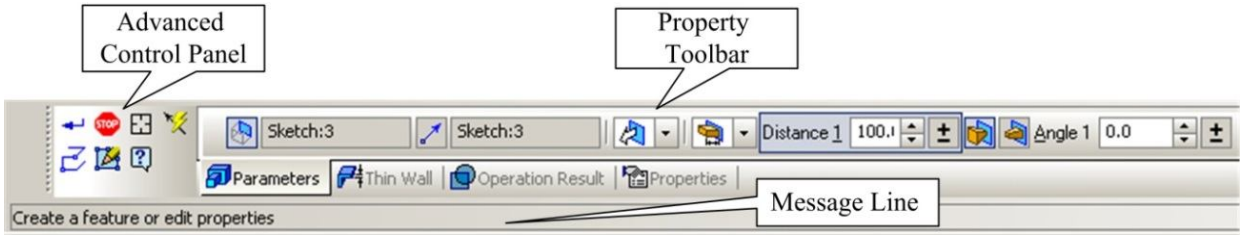

Figure 1.5 – Property toolbar

Current Status Bar is located in the top part of the window, right above the document window. The bar content is determined by the system operation mode. For example, when working with a drawing, sketch, or a fragment, there are management tools for cursor, layers, etc.

On the Toolbar buttons are grouped according to some options and have a context menu. These buttons are marked with a small black triangle in the lower right corner. To access this menu you need to click on the button and hold it for a while. When the shortcut command button is selected, move the cursor to the desired button and release the mouse button.

KOMPAS-3D system allows to zoom the image of the model on the screen, move, and rotate the image, select different options for its display. Control commands picture collected on the Service, the most frequently used duplicated by the buttons on the control panel.

If you want to show the entire document in a window after its opening or during the work on it is necessary to click Show All (F9) . The system automatically selects the highest possible zoom level at which the entire model is displayed in the document window.

If necessary, zoom in on any part of the model, for example, to edit its element, it is convenient to use the Zoom in by Marquee. You should press the button to Zoom In by Marquee . To mentally conclude 2D model in a rectangular marquee, click in one of the corners and move the cursor diagonally to the opposite corner. As soon as the phantom of the frame will cover the whole selected marquee, click again. The window shows a larger scale model of the selected area. After editing, you can switch back to display the entire model by clicking Show All (Fig. 1.6).

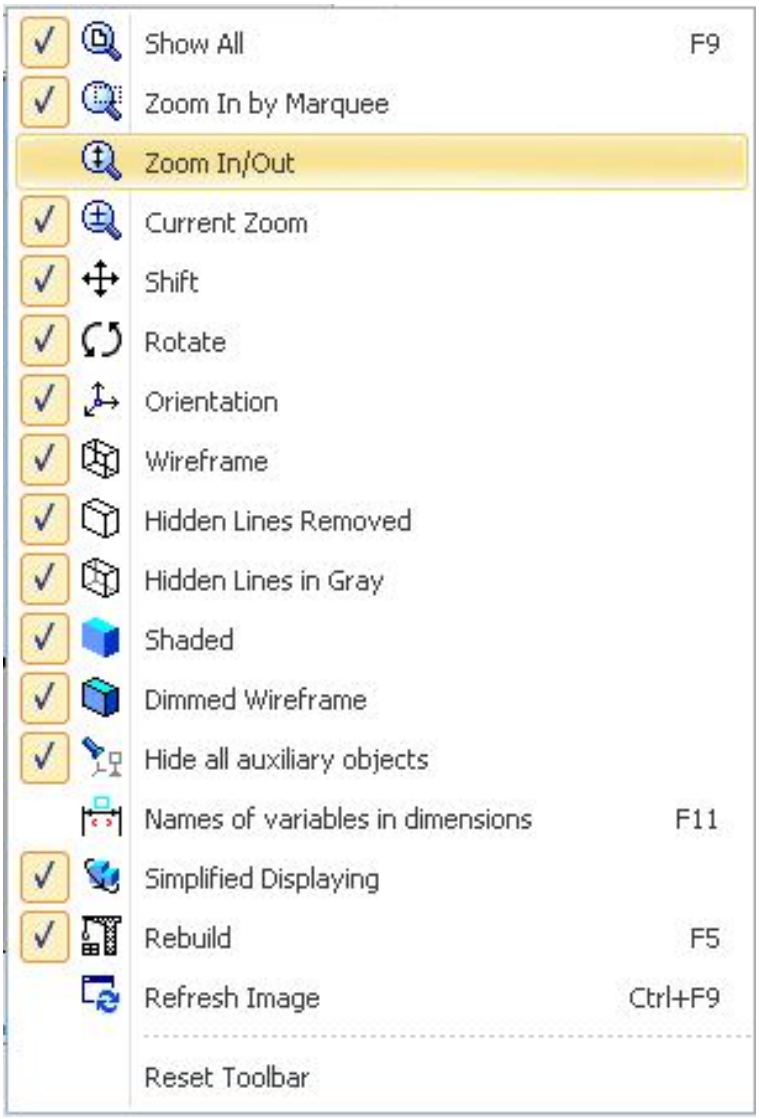

Figure 1.6 – Options of the images

Button Current Zoom the magnification allows discretely increasing or decreasing the magnification of the image in a fixed number of times.

Button Zoom In/Out can smoothly change the zoom, closer to or removing it relative to the point in which mouse button was pressed.

An image shift

The shift of the image in the document window is the command Shift, the inclusion of a button .

An image rotation

Convenient to view the model, turning it in any direction using the button Rotate .

Management mode display model

The buttons allow to apply the commands to control the display in the following modes: Wireframe, Hidden Lines Removed, Hidden Lines in Gray, Shaded and Dimmed Wireframe.

Mode control orientations of standard model

The model can be located differently relative to the projection planes. Standard types of views model are front, back, top, bottom, left and right. To obtain the desired orientation of the model need to click on the button Orientation in the Control Panel and choose from the list the desired projection (Fig. 1.7).

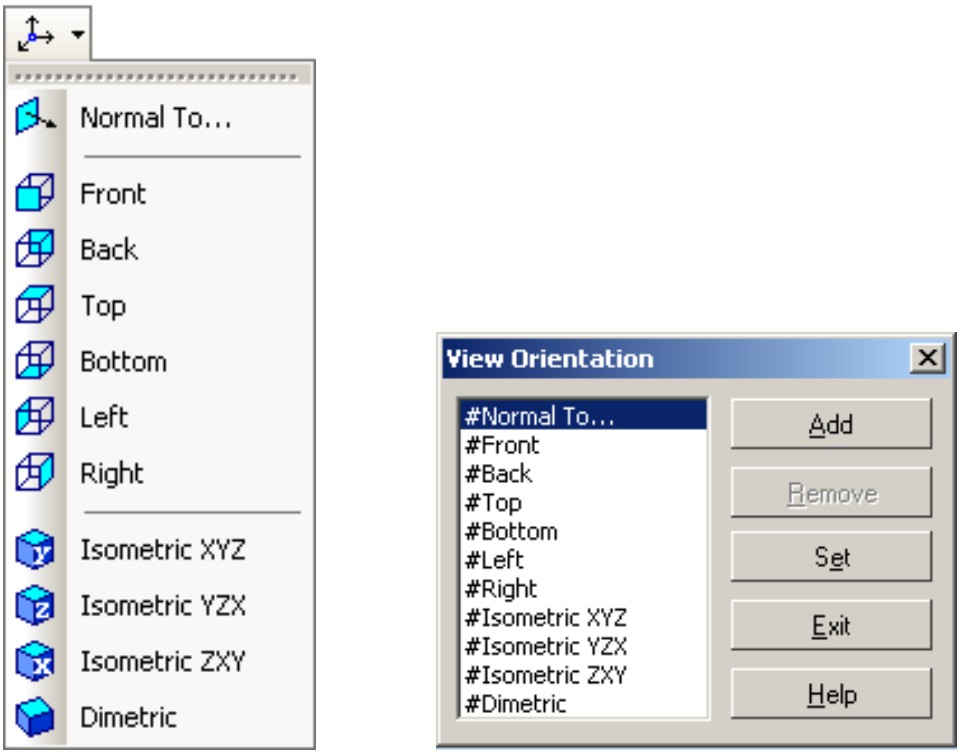

Figure 1.7 – View orientation

System KOMPAS-3D allows placing parallel to the screen every aspect of the model, or constructed by the user subsidiary plane. It must click to indicate that edge or auxiliary plane, and then select from a list of line Normal To... (Fig. 1.7).

1.2 Creating a 3D Model

To create a solid model, the operations of move (if the surface of the angular) or rotation (if the surface of rotation) flat contours is applied. Flat contour formed a solid body model is a projection of the base of the model or its element on a plane projections, either on the face of the model. The movement of the conture is called operation. Operations have additional features which allow to change the parameters of a model. In the couture you can copy an image from a previously created drawing or fragment.

Creating a three-dimensional model begins with the construction of a flat circuit on one of the standard projection planes.

KOMPAS-3D system defines a set of requirements for the construction of the contour:

Contour is always displayed using line style Normal.

Contours that make drawing the base of model should not overlap and have points in common.

If there are multiple paths one of them must be external and others nested in it.

There is only one level of nesting loops.

To open a document, you must click New Part or execute the File – New – Part.

In the main window of KOMPAS-3D appear a document window with the Model Tree and the name of the new part (model) – Part. It is advisable to change the name to a more appropriate design a document. To do this highlights the name by clicking the right mouse button. In the menu that appears, click Model Properties and write down the parts of the dialog box, name the new parts – Prism (pyramid), press button Create Object (Ctrl+Enter) (Fig. 1.8).

Figure 1.8 – Model Properties

How to build models

1. Activating click the ZX Plane (horizontal) in the Model Tree of projection and position it parallel to the plane of the screen, clicking sequentially in the current Orientation of the image press Normal to…

2. Press Sketch (Enable/Disable Sketch) and the system switches to build and edit the circuit grounds. In this mode, change the set of buttons on the Control Panel, the Toolbar and the composition of the Current Status Bar, which takes the form corresponding work in 2D modeling (Fig. 1.9).

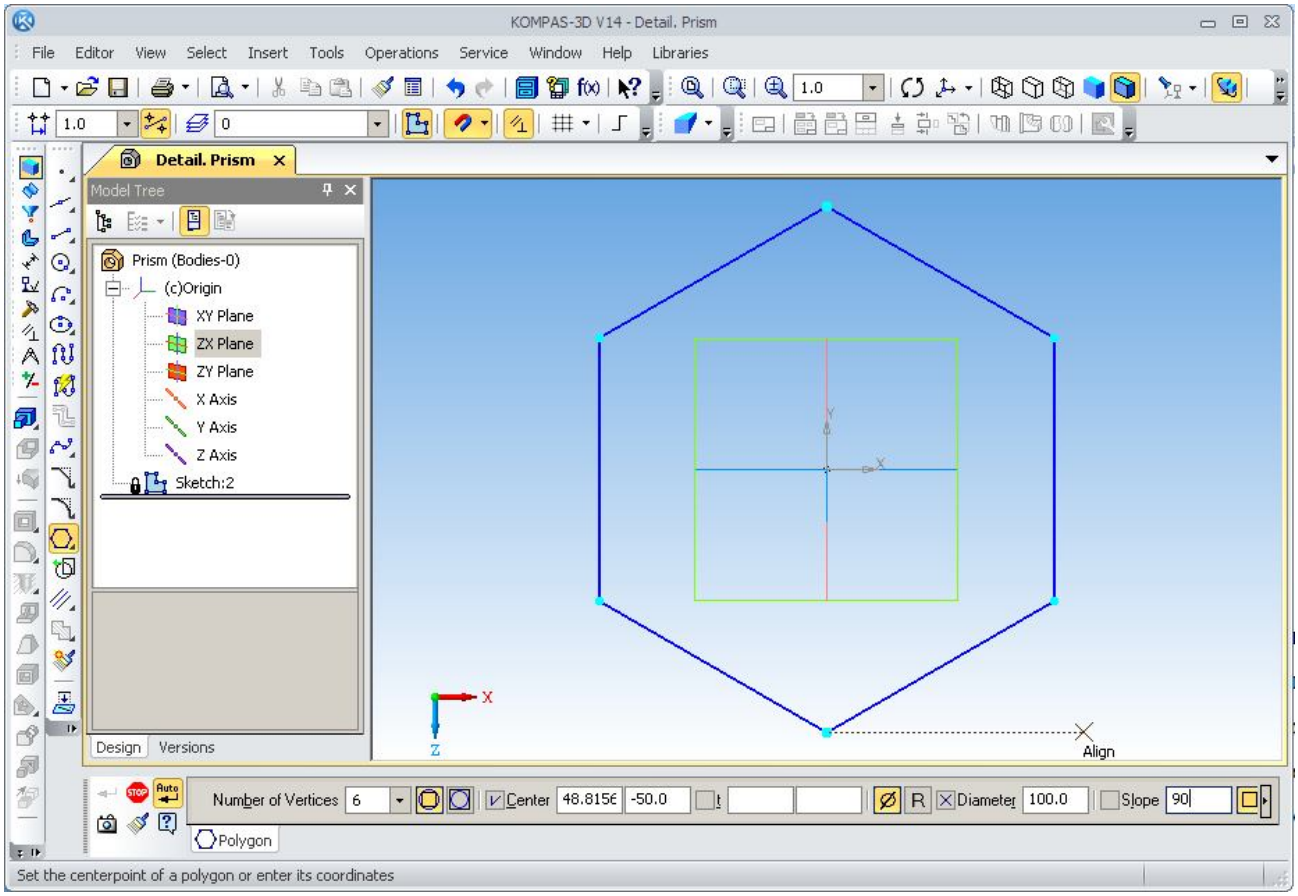

Figure 1.9 – Sketch of the part

3. Press the button of the Polygon, and to put in field of Property Toolbar: the value of sides of the polygon – 6, the diameter of circumscribed circle – 100 mm, the angle of the first vertex – 90. Press the button By Circumscribed Circle.

4. To fix the end of the construction of the base circuit by pressing again Sketch (Enable/Disable Sketch). Then the system goes into constructing a model built on the base. The Toolbar changes its appearance it is active on only one button Operation Extrude with context menu (Fig. 1.10).

Figure 1.10 – Context menu of extrude

5. Press the button Extrude on Compact Toolbar and the Property Toolbar to specify the distance of 100mm (and also to introduce the parameter of the draft to the pyramid) and press the create button (Fig. 1.11).

Figure 1.11 – Property toolbar

Set the display mode of the Dimmed Wireframe clicking and set the Orientation – Isometric XYZ.

As a result of commands creates a prism (or pyramid) with the specified dimensions in Figure 1.12.

Optionally in the display all the graphic elements of the model for this you should use the command Show all pressing .

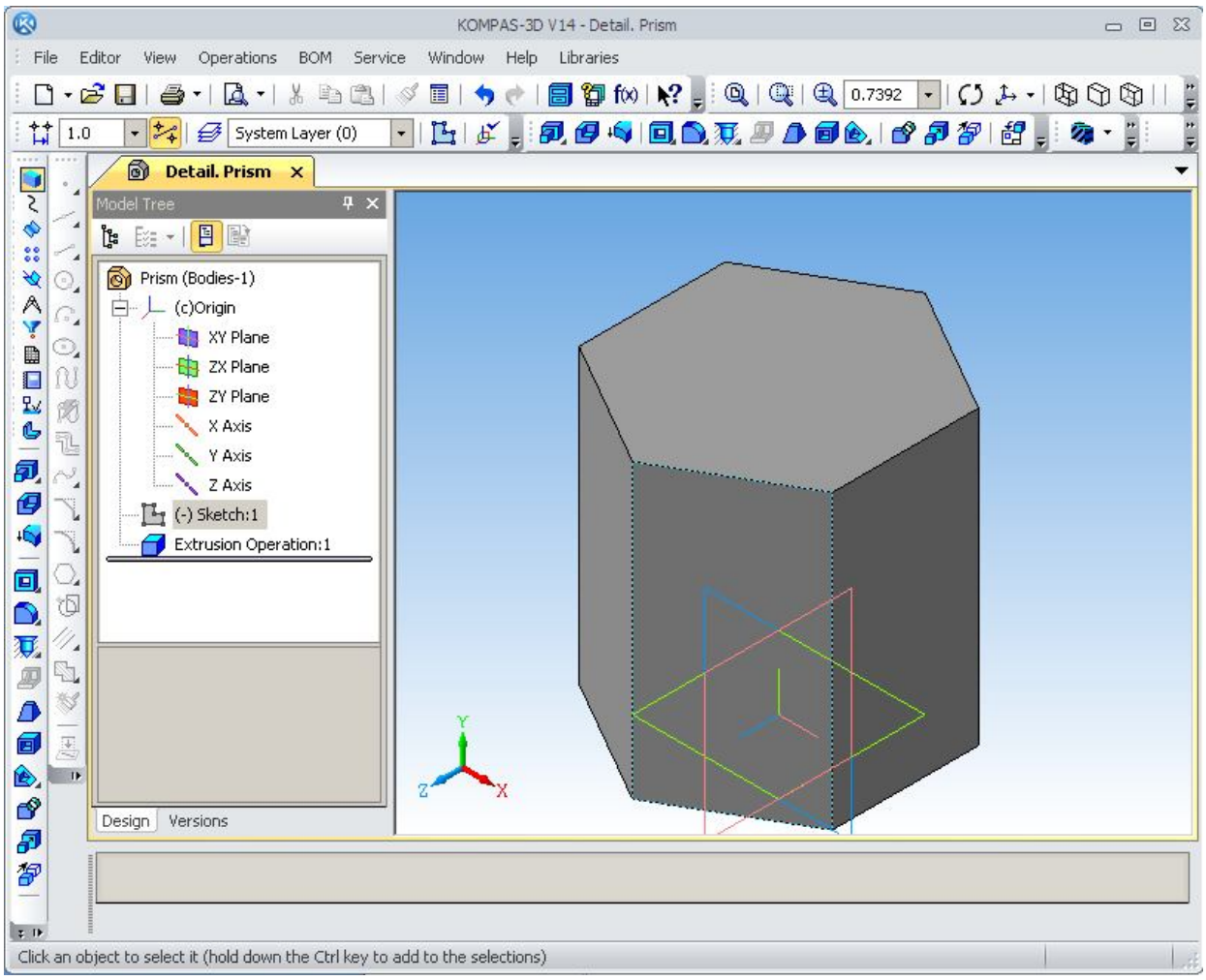

Figure 1.12 – The prism

6. The next stage of model construction is truncation model by horizontal planes:

a) press Sketch (Enable/Disable Sketch) and the system switches in 2D modeling;

b) activating the XY Plane (front) in the Model Tree and then clicking sequentially in the current Orientation of the image press Normal to…;

c) using the Toolbar (the button Geometry) are building the necessary cut line, i.e. front projection parts;

d) press Sketch (Enable/Disable Sketch) and the system switches in 3D modeling. The toolbar of Geometry constructions were replaced to the Compact Toolbar (Fig. 1.13).

Figure 1.13 – Compact panel

In the dialog box that appears after clicking on the Operations – Trim – By Sketch, set operation parameters on the Property Toolbar: the forward or reverse direction, then press the key to Create Object (Fig. 1.14).

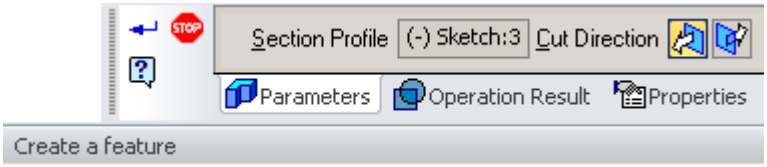

Figure 1.14 – Create a feature

1.3 Editing the Model

Consider some of the questions the model editing. Information on the operations carried out in the process of Model Tree, written in the tree model and based on it, you can go back to editing any of them. General principles cancel or modify of the model is the following:

– trigger menu commands to perform actions on the selected object by clicking on the right mouse button;

– enter the appropriate command from the menu.

According to the model create the part drawing

1. On the top toolbar, activate the function File (or).

2. On the Main menu, select create New – Drawing a blank mode for the drawing. On the Compact panel select Views – Standart Views – From file (Fig. 1.15).

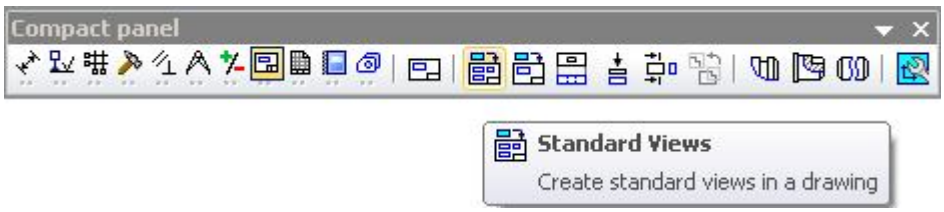

Figure 1.15 – Compact panel

3. In the dialog box note the appropriate types (front, top, left and isometric) (Fig. 1.16).

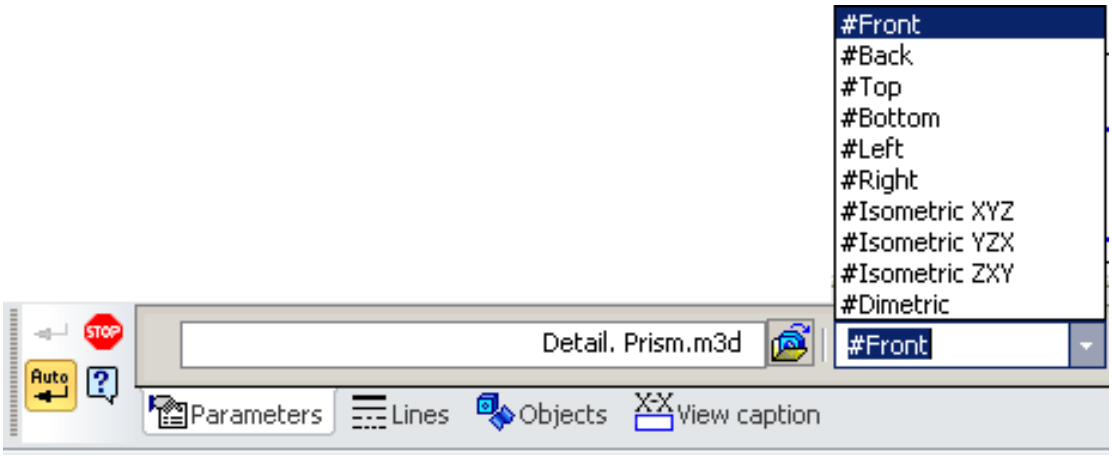

Figure 1.16 – Views of parts

4. Fill in the title block by activating the button "size and technological notation" toolbar.

2 CONSTRUCTION DRAWINGS

2.1 General information about the construction drawings

2.2 Structural elements of buildings and schemes

2.3 Graphic images on the construction drawings. Door and window symbols

2.1 General information about the construction drawings

Construction drawings are contained from projection images of building objects or their parts and other necessary for their construction data.

Building objects depending on their purpose are subdivided into 4 groups:

- residential and public buildings (civil);
- industrial buildings;
- agricultural buildings;
- engineering structures (bridges, tunnels, overpasses, embankments, etc.).

When performing design and construction plans should be guided by GOSTs ESKD and CDDS (system of design documentation for construction).

Scale drawings are selected in accordance with GOST 2.302–68. For residential and public buildings:

- floor plans, basement, foundations, sections, elevations, installation plans overlap – 1:100, 1:200, 1:500;
- plans sections, fragments of plans, sections and elevations – S 1:50, 1:100;
- products and components – S 1:5, 1:10, 1:20 editing model.

International, or ISO, sheet sizes

Papers manufactured and sold outside of North America are based on 1 square meter.

The International Standards Organization (ISO) system of paper sizes applies to all grades of paper and paper board and consists of five series of sizes: A, RA, SR, B, and C. Within each series, each sheet is twice the size of the next smaller sheet and half the size of the next larger sheet (Fig. 2.1).

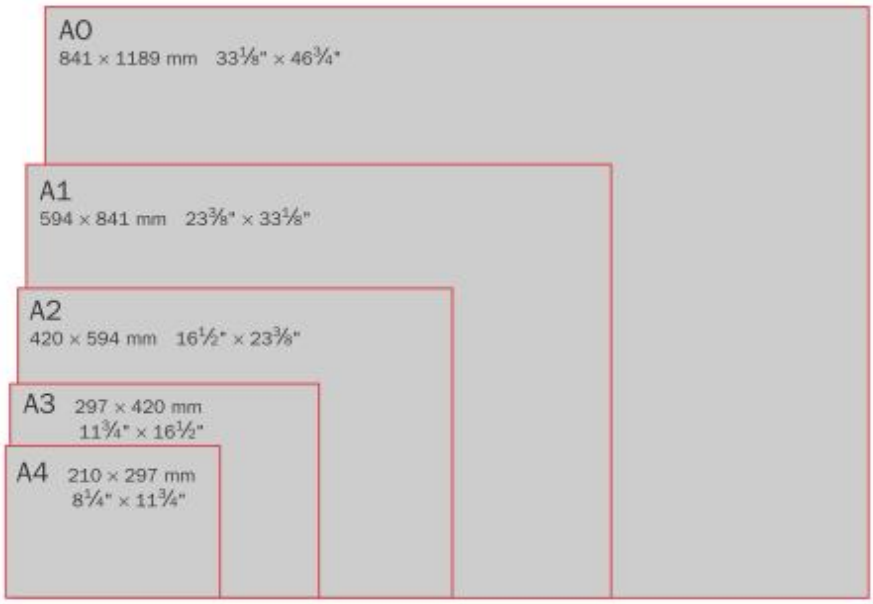

Figure 2.1 – Sheet sizes

Object lines

Object lines are used to show the shape of an object. All visible edges are represented by object lines. All the lines in Figure 2.2 are object lines. Drawings usually include many solid lines that are not object lines, however. Some of these other solid lines are discussed here.

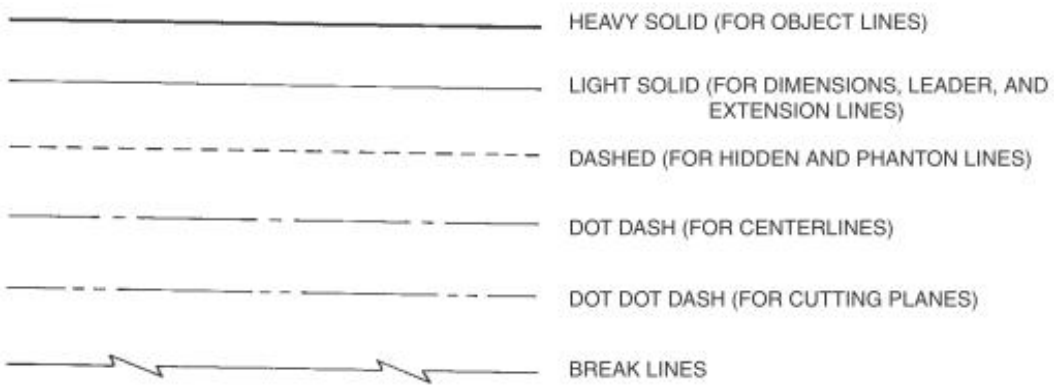

Figure 2.2 – Alphabet of lines

Table 1 – ISO a sheet sizes and inch equivalents

ISO Size	Size (millimeters)	Size (inches) approx.
4A0	1682×2378	66 ¼ ×93 ⅜
2A0	1189×1682	25 ½ ×36 ⅛
A0	841×1189	33 ⅛ ×46 ¾
A1	594×841	23 ⅜ ×33 ⅛
A2	420×594	16 ½ ×23 ⅜
A3	297×420	11 ¾ ×16 ½
A4	210×297	8 ¼ ×11 ¼
A5	148×210	5 ⅞ ×8 ¼
A6	105×148	4 ⅛ ×5 ⅞
A7	74×105	2 ⅞ ×4 ⅛
A8	52×74	2×2 ⅞

2.2 Structural elements of buildings and schemes

Building objects consist of separate parts – designs. Design teams are composed of individual elements, and monolithic, manufactured on site.

Foundation from wall or under a separate support (column) is called the underground part of the building, through which the load is transferred to the ground. Foundations are tape and columnar. The walls in the building are divided into external and internal. Walls are carriers (which transmit the load on the foundation of its own weight and the weight of ceiling and roof), self-supporting (only its own weight) and wall (hung on the columns consist of individual panels and the weight of the load is transferred to the column).

Partitions – internal walling.

Cap – the lower part of the outer wall, resting on the foundation.

Span – the inner horizontal design that separates the building into floors.

Cover – upper cladding separating the building from the outer space environment.

Roof – top water shut coating layer or roof of the building.

Opening – through a hole in the wall, designed for the windows, doors, gates, etc.

Window unit – sash box.

Door unit – door leaf box. Stairwell – fenced capital (bearing) walls room stairs.

Flight of stairs – ramp stairs with steps (no more than 18 steps).

Staircase – horizontal element stairs between marches. Summary - level floors, intermediate – to move from one to another march.

Rafters – roofing truss structures that represent beams, resting on walls and internal support.

Coordination axis

The construction plan begins with the drawing axis on a number of elements. These axes define the location of the main load-bearing structures and are called coordinating the longitudinal and transverse axes. Distance between axes of the plan is called the step. Step can be longitudinal or transversal.

Coordination axes put phantom lines and indicate brands in the circles of diameter 8–12 mm. For marking to applied Arabic numerals and capital letters. Font size one or two rooms are larger than the font size of numbers.

The figures mark the axis side of the building with a bigger number of axes. The sequence of marks – left-to-right, bottom-up (Fig. 2.3).

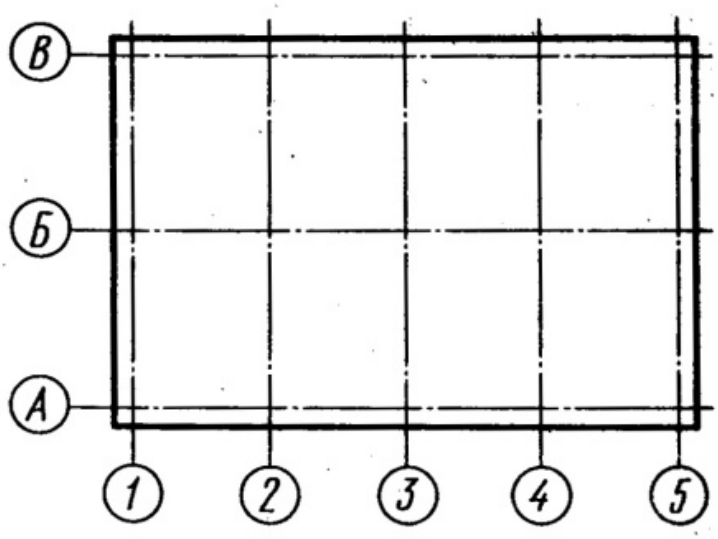

Figure 2.3 – Mark the axis

In buildings with bearing longitudinal and transversal walls binding coordination axes external and internal walls make as follows:

– on beams leaning against walls and internal support:

– inside face of the outer wall is placed on the coordination axis at a distance M or 2M, i.e. 100 or 200 mm (modular binding);

– coordination axis coincides with the inner wall surface (no binding);

– in internal walls coordination axis must coincide with the axis of symmetry walls, except the walls, staircases and walls with ventilation ducts (center binding).

Dimensions on the construction drawings

Dimensions are given for the sizes and locations of all walls, partitions, doors, windows, and other important features. On frame construction, exterior walls are usually dimensioned to the outside face of the wall framing.

Dimensions in mm without affix represent units of measure and applied as closed circuit (Fig. 2.4).

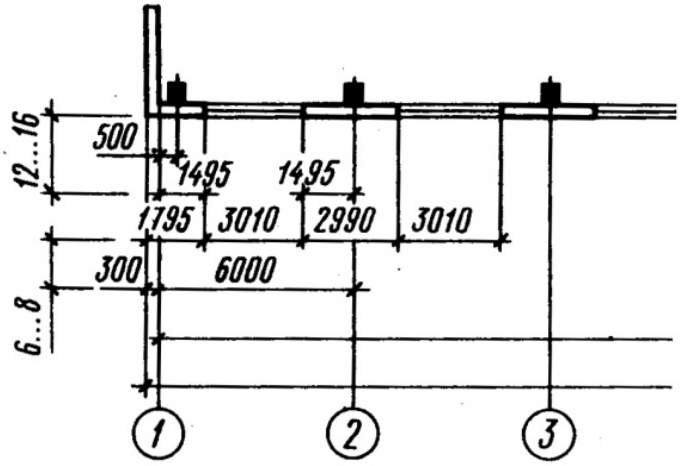

Figure 2.4 – Dimension lines in the drawing

When dimensioning diameters, radii and angles instead of serif put arrows. Mark levels (height, depth) of an element of a building or structure from the indicating any level, taken as zero, is placed on the outrigger lines or contour lines and designated by the symbol (Fig. 2.5):

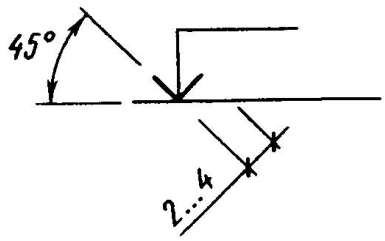

Figure 2.5 – Extension lines in the drawing

Mark indicated in meters with three decimal places. Conditional marks indicate 0.000. The level is below the zero conditional mean minus sign, mark above the zero – unsigned. As a zero mark for buildings usually take the floor level of the first floor. Marks are accompanied by explanatory titles – LCP (the level of the clean floor), GL (ground level).

On the plans, if necessary, marks indicate with a plus sign.

On the plans of the slope direction of the plane cursor over which (if needed) write down the value of the slope (Fig. 2.6).

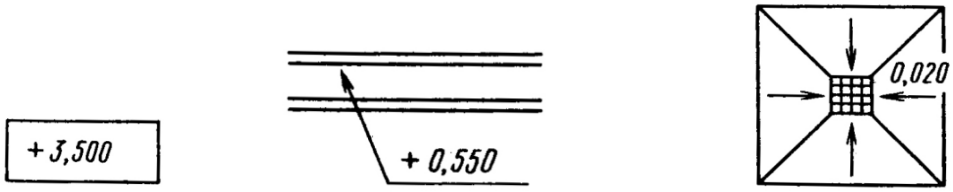

Figure 2.6 – Marks on the plane

Construction drawings of buildings and constructions consist of the General rules rectangular projection on the basic plane projections. Images of the buildings have their own names.

2.3 Graphic images on the construction drawings. Door and Window Symbols

Door and window symbols show the type of door or window used and the direction the door or window opens. There are three basic ways for household doors to open – swing, sliding or fold shown in Figure 2.7. Within each of these basic types there are variations that can be readily understood from their symbols. The direction a swing-type door opens is shown by an arc representing the path of the door.

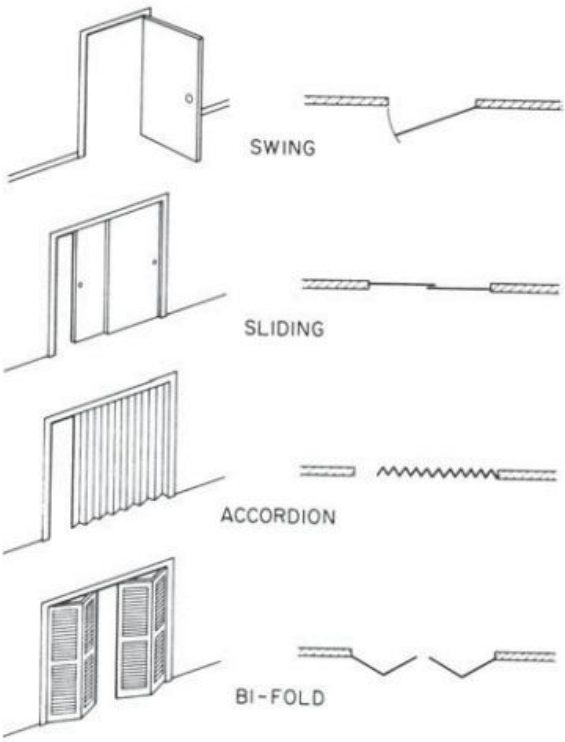

Figure 2.7 – Types of doors and their plan symbols

There are seven basic types of windows. They are named according to how they open (Fig. 2.8).

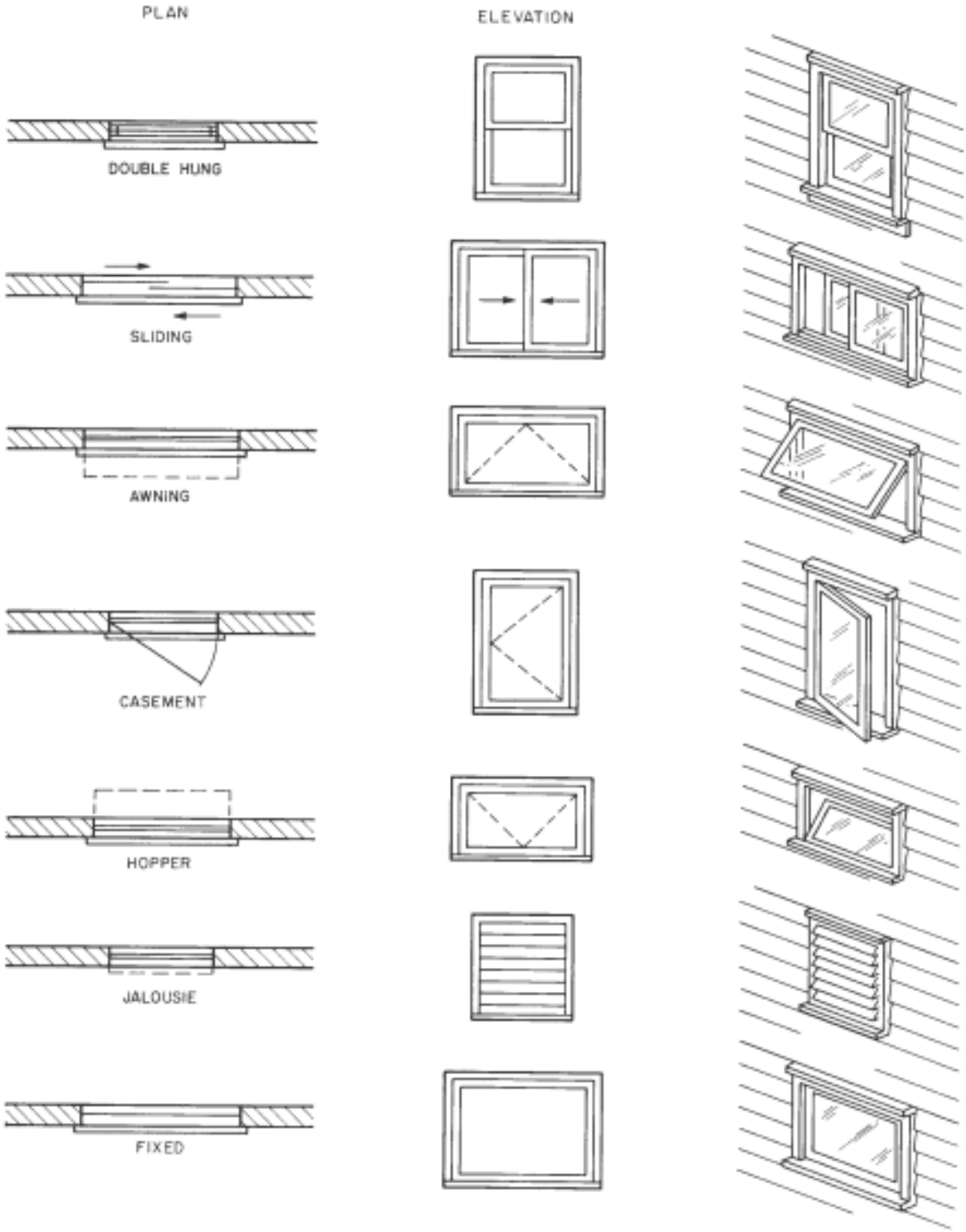

Figure 2.8 – Types of windows

Table 2 – Symbols on the drawings

Name	Image
1	**2**
Windows	
1 Opening without-quarters of a wall or partition Window	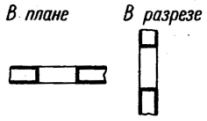
2 Window opening without quarters	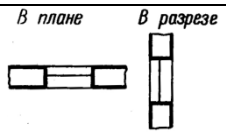
3 Window opening with quarters	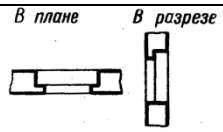
Doors (gates)	
4 The door from the door opening without quarters	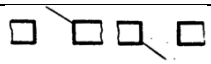
5 The door from the door opening without quarters	
6 The door from the door opening with quarters	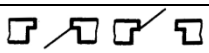
7 The double door opening of the quarters	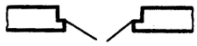
8 The door from swaying canvas	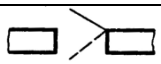
9 The sliding door from	
10 Revolving door	
Stairs	
11 Ladder in terms of upper marsh	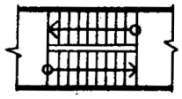
12 Stairs in the plan – interim marches	
13 Ladder in terms of lower marsh	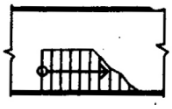
14 Ladder in terms of scale 1:100 and smaller	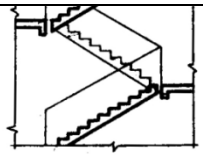

Continue the table 2

1	2
Partitions, cabins, cupboards	
15 The partition wall in plan and section	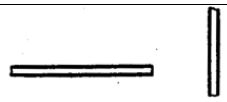
16 Partition team shield plan	
17 Wall of glass in the plan and the section	
18 Cockpit shower in the plan	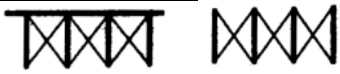
19 Cab latrines in terms	
20 Built-in wardrobe in the plan	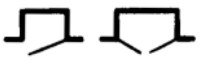
Vents, ducts in the walls	
21 The hole rectangular, round	
22 Chimney in the plan	
23 Channel ventilation in the plan	
Ovens, stoves, refrigerators	
24 Furnace heating (General purpose)	
25 Furnace heating stationary gas	
26 Stove (General purpose)	
27 Fixed electric stove	
28 Plate fixed on gas	
29 Stove, portable gas	
30 Stove portable electric	
31 Electric refrigerator	

Ending the table 2

1	2
Sanitary-engineering devices	
32 Sink	
33 The kitchen sink	
34 Washbasin	
35 Bath	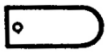
36 Bidet	
37 The floor toilet	
38 The wall-mounted urinal	

3 CONSTRUCTION DRAWINGS AND ELEMENTS OF THE BUILDING

3.1 Drawings of the building plan

3.2 Section drawings

3.3 Elevation drawings

3.4 Computer drawing of the building

3.1 Drawings of the building plan

The plan of the building is called the image of the building, mentally dissected by a horizontal plane at the level of window and door openings (about 1m) and projected onto the horizontal plane of projection. The plan shows what is clipping plane and what is underneath it.

On the plan of the building show window and door openings, the location of the stairs, partitions and capital walls, built-in cabinets, sanitary-technical equipment end other. The plan placed under the elevation in the flat connection with it.

The position of all structural elements is determined by reference to the coordination axes.

Outside the building contour put the size of window and door openings "in the light" and spaces between them (the first dimensional chain), coordination between axles (second dimensional chain) and the axis (the third dimensional chain).

Internal dimensions of premises, thickness of walls and partitions should be put on internal dimensional chains. They spend at least 8...10 mm from a wall or partition. Also bind all the inner main walls to the axes.

Floor space is put down in the lower right corner of the plan of the premises in square meters without designation of units with two decimal places and a bar beneath.

The plans show what direction the door opens. Exterior doors from the street to the house should open outwards, and the door from the stairs to the apartment is in-

side the apartment. Opening the other doors is depended on the convenience of planning and operation.

Brand of Windows and external doors should be put on the outer side of the wall. On the open plan line shows the clipping plane for the corresponding section (Fig. 3.1).

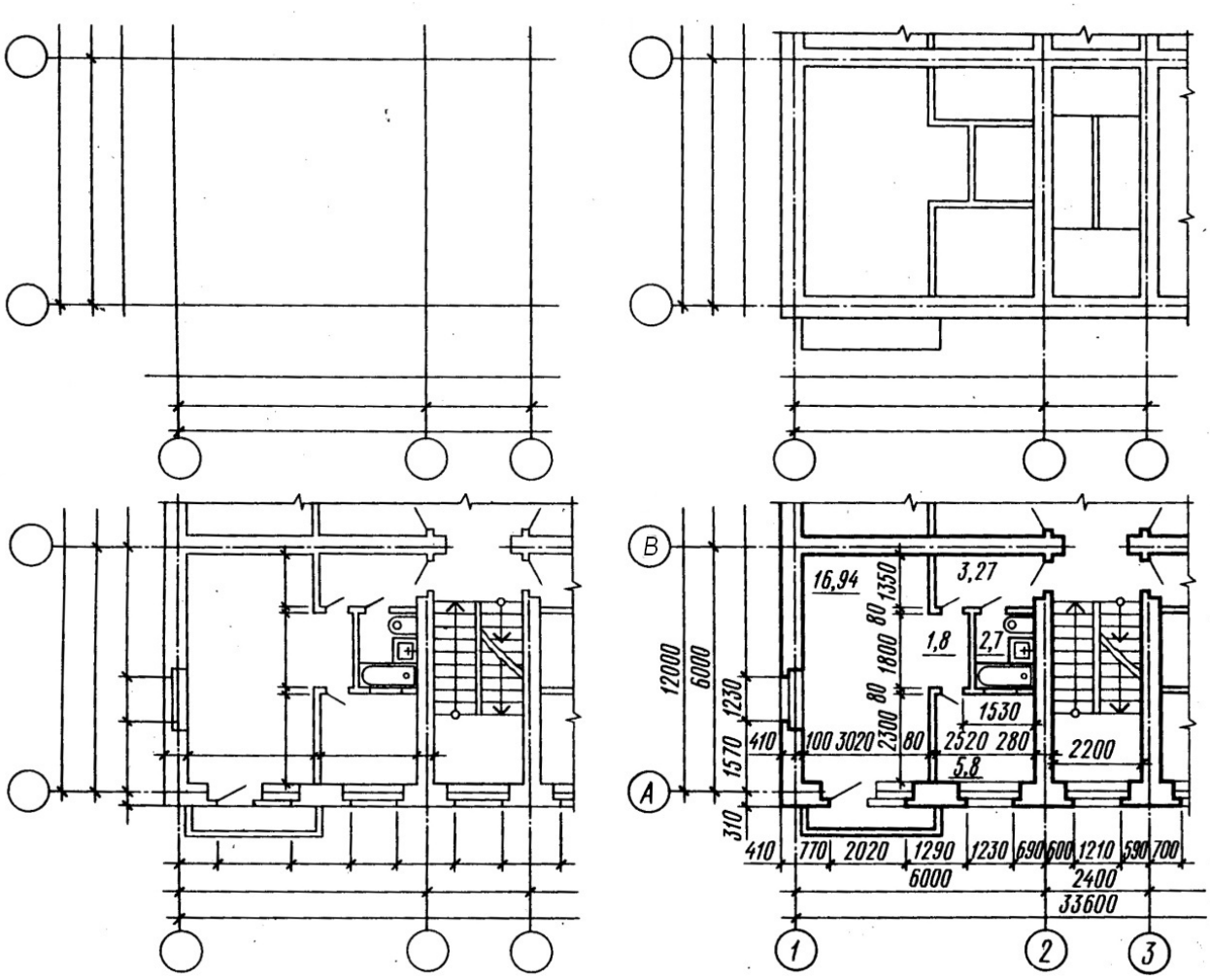

Figure 3.1 – The sequence drawing of the building plan

A building plan is drawn in the following order:

– conduct longitudinal and transversal coordination axis;

– draw all external and internal walls, partitions and columns;

– produce a breakdown of window and door openings in the external and internal walls and partitions, conditionally show opening doors;

– draw stairs, sanitary appliances, built-in wardrobes, mezzanine, balcony fences and other elements;

– put the necessary external and dimension lines show the cutting line;

– put down all sizes, make appropriate titles, check the drawing;

– make a final stroke.

Contours of cuts and sections operate continuous main line. Elements that do not fit in the plane of section are performed by a thin line.

3.2 Section drawings

A sectional image of the building is called, mentally dissected vertical plane and projected onto the projection plane.

Direction of the cutting plane is marked on the ground floor open plan line with arrows at the ends, showing the direction of gaze. About the shooter put arabic numerals or lowercase, but in the context of making the inscription type: Section 1–1.

On the cuts visible contour lines that do not fit in the plane of section, perform a continuous thin line.

On sections focal axis endure down and affix label sizes between adjacent axes.

Position of structural elements height is determined by the elevations and dimensions, which appears on the remote lines levels of the respective elements.

Inside the cut applied height floors, doors and windows, as well as elevations and floor levels stairwells.

For installation of staircases and platforms is a section along the stairs. The section plane is held by fellow flight of stairs to the observer.

On the exterior side of the cut at a distance of 12–15 mm spend dimensional chain, determines the size of the window openings and piers, cap, outside the doorway. At a distance of 10–15 mm from the chain cause elevations of the ground level and the top of the walls, shelves turned out.

Also the marks are applied to the floor stairwell in the vestibule, entrance areas – one step above the sidewalk. The level of these sites increases towards a flight of stairs, so that rainwater does not fall into the stairwell.

Industrial buildings in sections depict not all items in the cutting plane, but only those that are in close proximity.

The section drawings are shown in Figure 3.2.

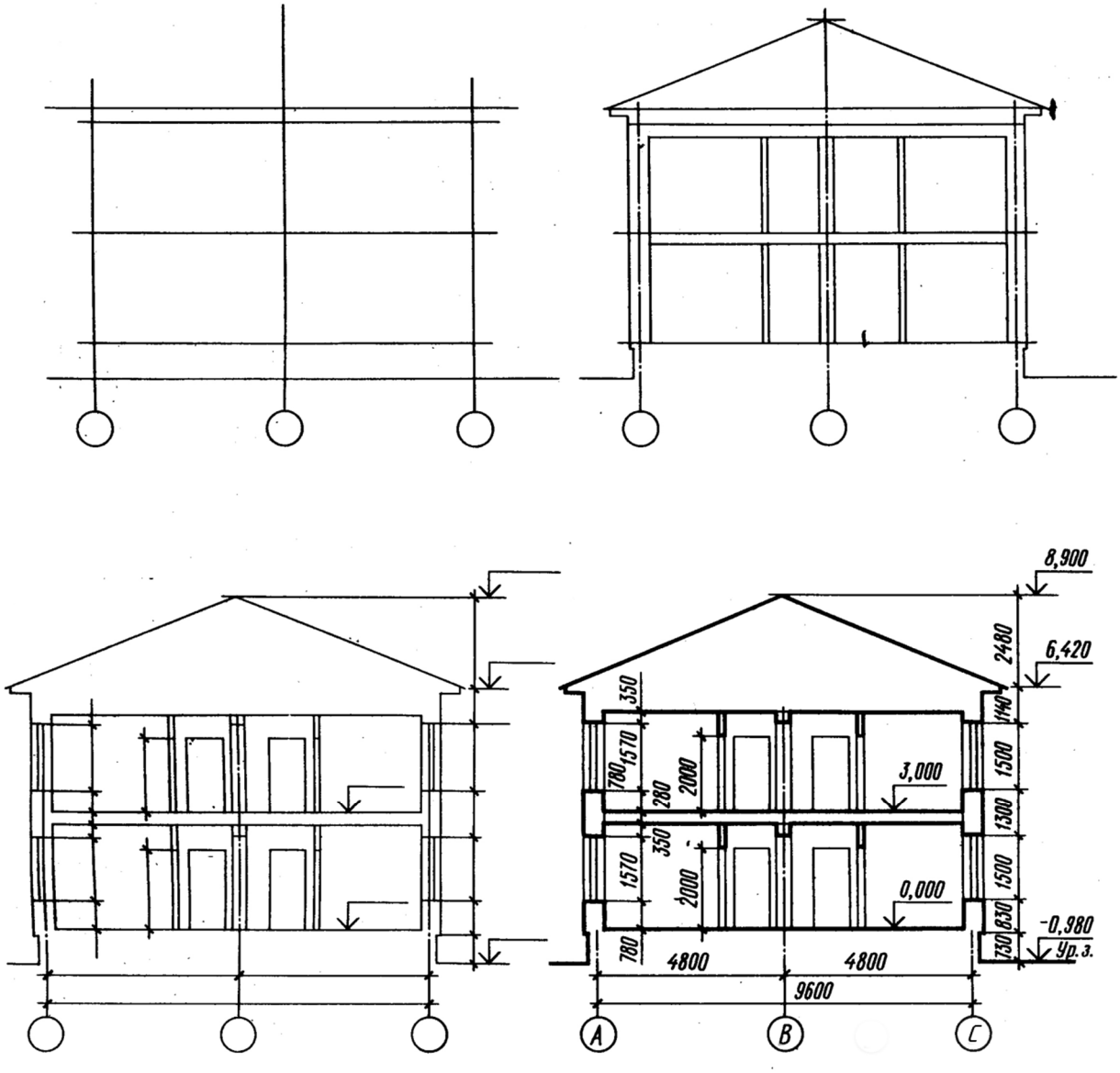

Figure 3.2 – Section drawings

A building section is drawn in the following order:

– draw coordination axis main load-bearing structures and perpendicular to them, horizontal lines of levels: land surfaces, floor all floors and the attic floor and the top of the cornice;

– contours applied exterior and interior walls, partitions, caught in the cut, as well as the height of intercommunication and attic floors and roof ridge is drawn takeaway cornice and plinth, draw the roof slopes;

– scheduled in the exterior and interior walls and partitions of windows and doors, as well as visible doorways and other elements located behind the cutting plane;

– carried outrigger and dimension lines, circles marking axes and signs elevations;

– produce the final stroke, dimensions and elevations make explanatory inscriptions and indicate the name of the section.

3.3 Elevation drowings

Types of buildings in the front, rear, right and left are called elevations. In the name of elevations indicate extreme focal axis. Elevations give an idea of the appearance of the building, its overall shape, size, number of floors, the presence of balconies and loggias.

View of the building from the street called the main elevation, from the yard – yard and side – end.

In the elevation drawings show the location of windows, doors, balconies, door trims, etc. In the large-panel buildings and walls the blocks and the panels are shown. Dimensions are not applied on elevation but only the extreme axis shown on it. The right or left a ground line, the top and bottom openings, eaves, top roof are shown on this drawing.

Elevations are usually performed in scale 1:100, 1:200 (civic buildings) and 1:200, 1:500 (industrial buildings). Complex view elevations are in the fragments in scale 1:10, 1:20.

The elevation drawings are shown in Figure 3.3.

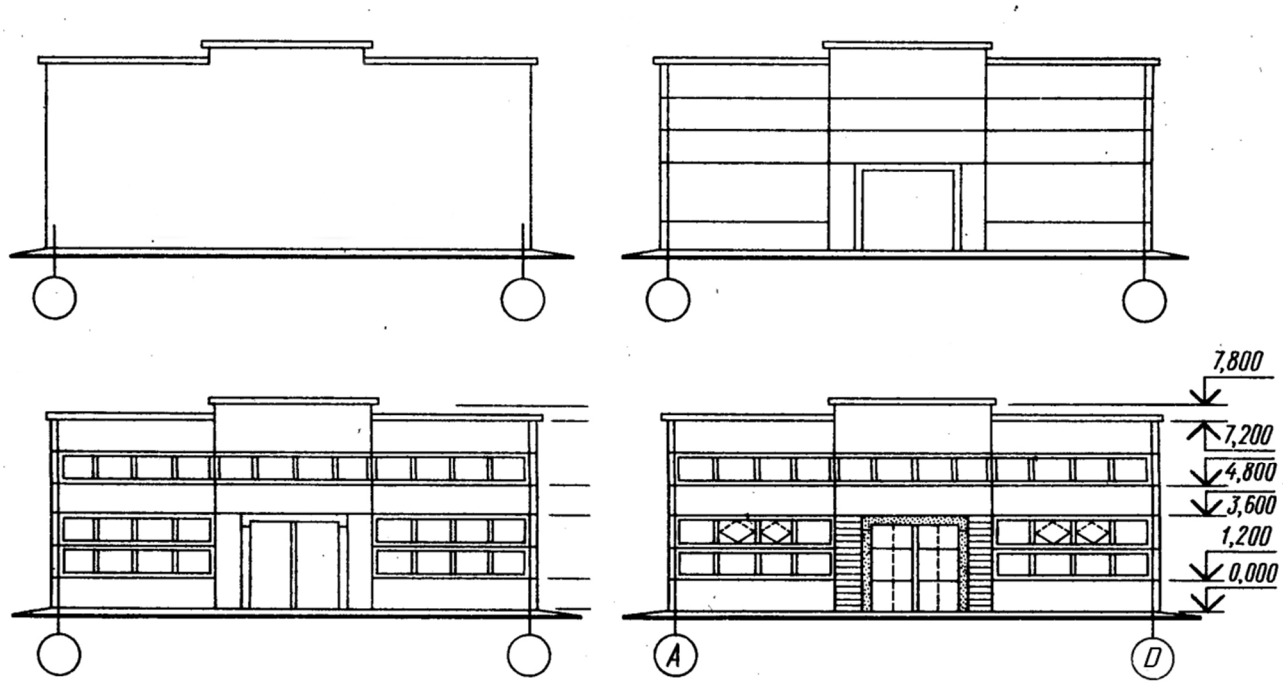

Figure 3.3 – Elevation drawings

A building elevation is drawn in the following order:

– draw the axis and the outline of the building;

– draw the windows and doorways, balconies, canopies plates, cornice and others architectural elements;

– draw the window frames, doors, fences balconies, vents and chimneys on the roof, put down markers icons;

– applied levels of the appropriate heights, marked focal axis;

– after verification of compliance with the plan and make the final circuit.

Draw the main line of the ground. Land line make thickened line that goes beyond the elevation view.On the architectural drawings on walls sometimes show shadows and elements entourage.

Sometimes necessary information can be conveyed without showing the interior construction. A large scale may be all that is needed to show the necessary details.

Many details are best shown by combining elevations and sections or by using isometric drawings.

3.4 Computer drawing of the building

1. On the top toolbar, choose the command ***New document***.

2. Activate the command ***Service***. You should choose ***Settings*** → Document Options → Settings first sheet – Format (A3 – horizontal) → Registration → Drawing and design → The first sheet.

3. The menu command ***Insert*** select mode ***View*** and in the opened window enter the value of the scale (1:100).

4. Activate the command ***Tools*** → Library Manager → Library of drawing plans of buildings and constructions.

5. For rendering of the coordination axes selectable mode ***Drawing axes*** → coordination axes. The opened window specify mesh parameters: step, the number of steps, total length of axes, type the ending axis, the length of departure axes.

6. Draw bearing walls and partitions. In the current library included in the regime of the Elements of frame structures. In the desktop window, enter all required parameters.

7. Insert the Windows and doors. Are alternately in the modes ***Window*** and ***Door*** in the current library. In the opened boxes, enter the necessary parameters: width, height, and type of binding is on the drawing.

8. Insert the stairs and sanitaryware call dialogs ***Ladder*** and put all the necessary dimensions and annotations on the finished drawing plan of the building.

In the left part of the dialog, open the library window displays a list of commands the current library that can be grouped in sections. To expand the content of any section, place the cursor on the plus icon next to the title of the section and click the left mouse button. Another click on this symbol (after you expand a partition, it appears as a minus) will lead to the collapse of the content section.

In the right part of the dialog box displays the slides, facilitating the search for necessary command.

To run the library commands for execution, click its name in the list and click OK. You can also double-click the left mouse button on the name of the team. For start of library command for execution choose its name in the list and press the OK button. It is possible to left-click on the command named twice also.

APPENDIX

The tasks

Elevation 1-6

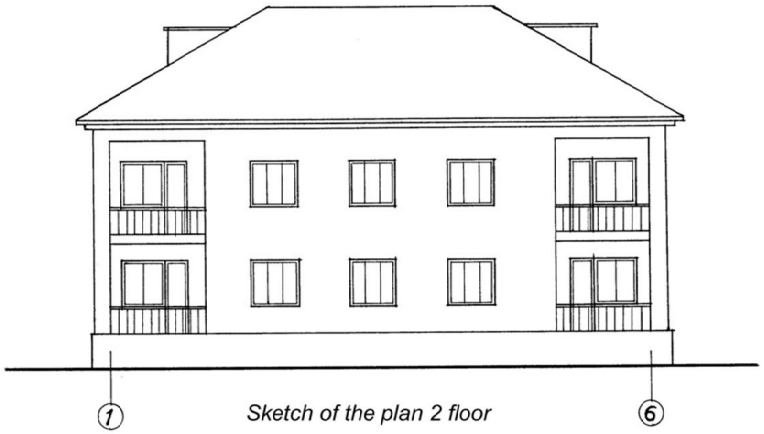

Sketch of the plan 2 floor

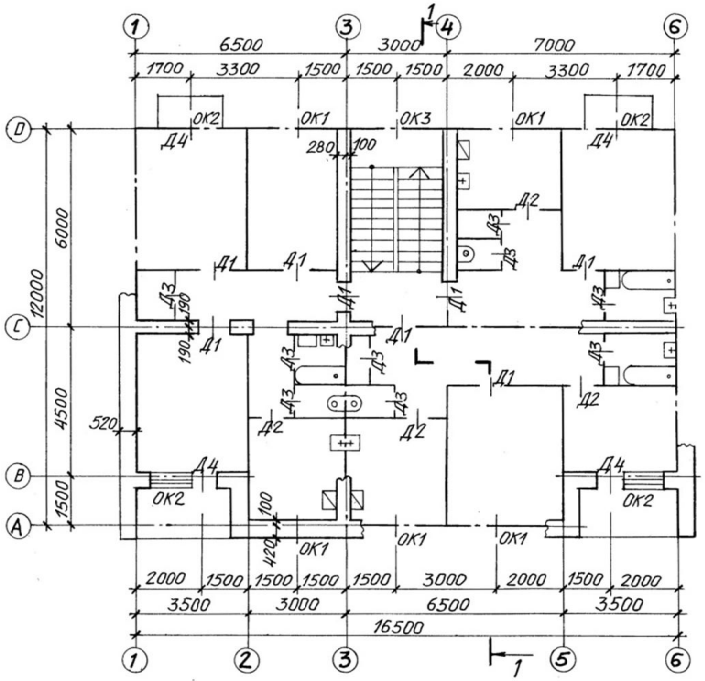

Section 1-1

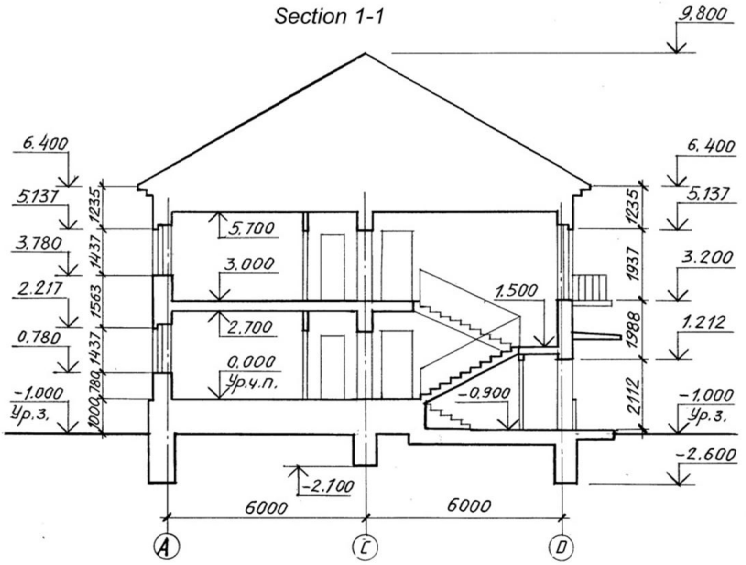

Task 1

Elevation 1-4

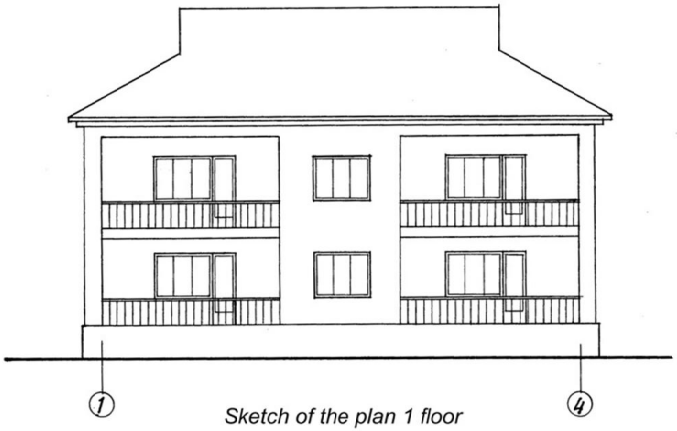

Sketch of the plan 1 floor

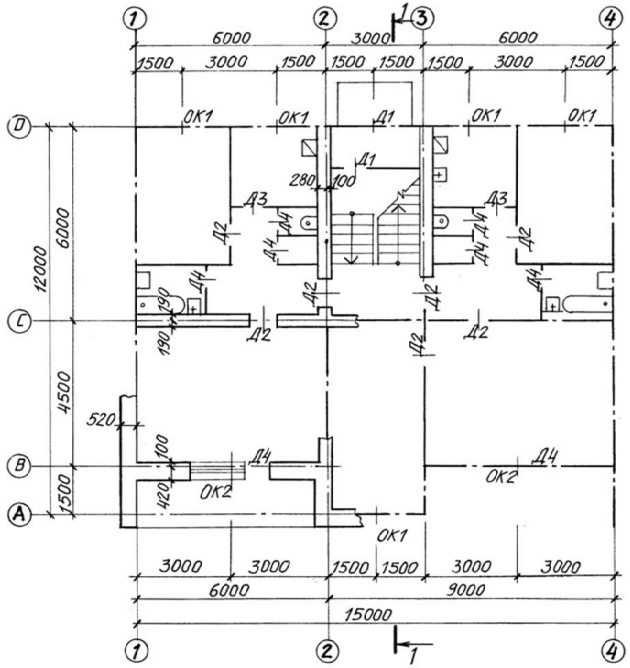

Section 1-1

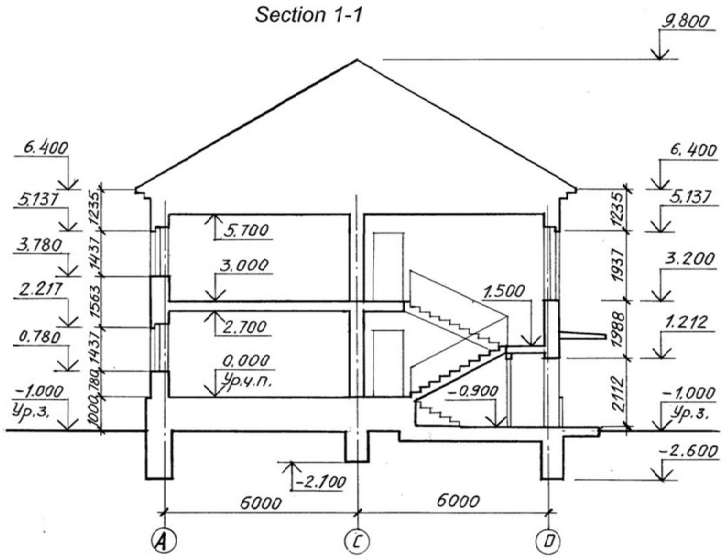

Task 2

Elevation 1-7

Section 1-1

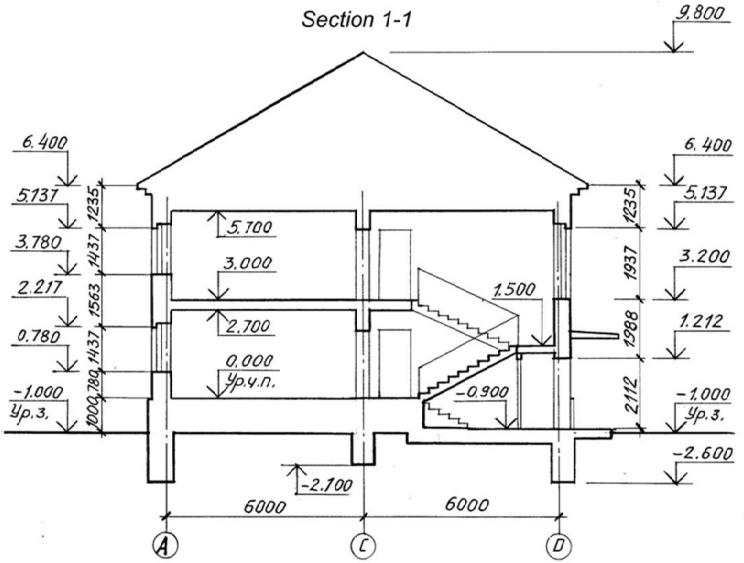

Sketch of the plan 1 floor

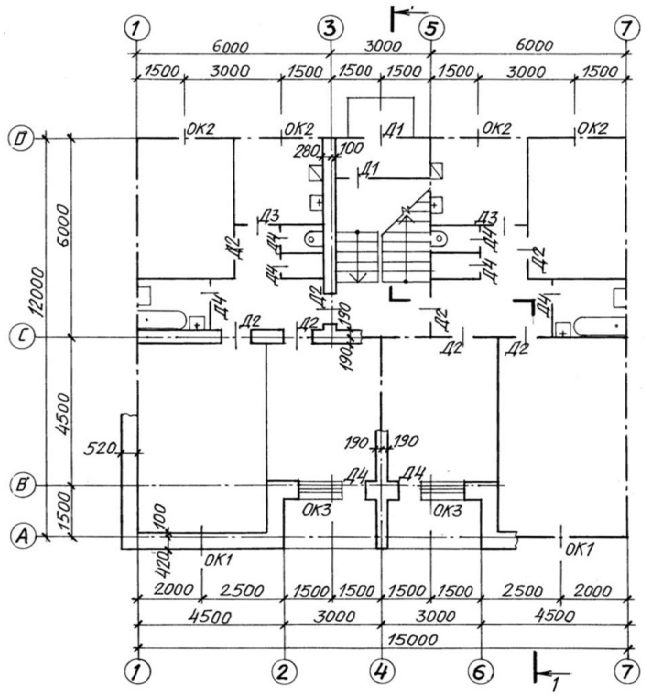

Task 3

Elevation 1-5

Section 1-1

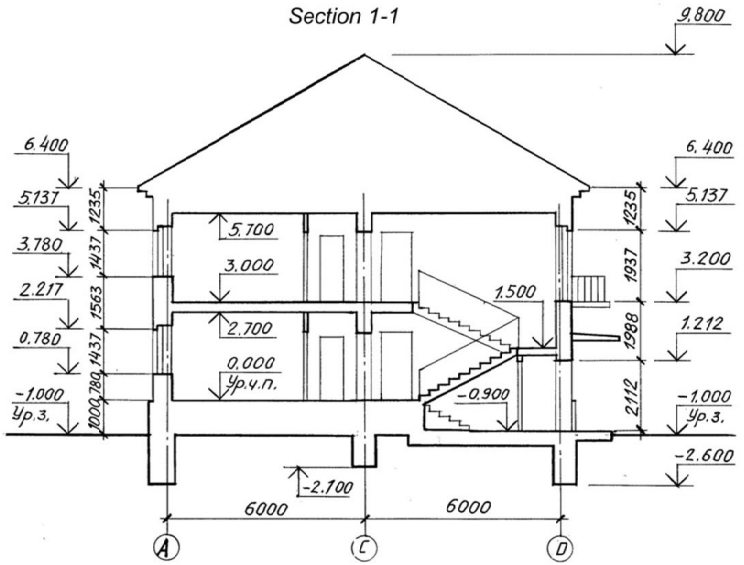

Sketch of the plan 1 floor

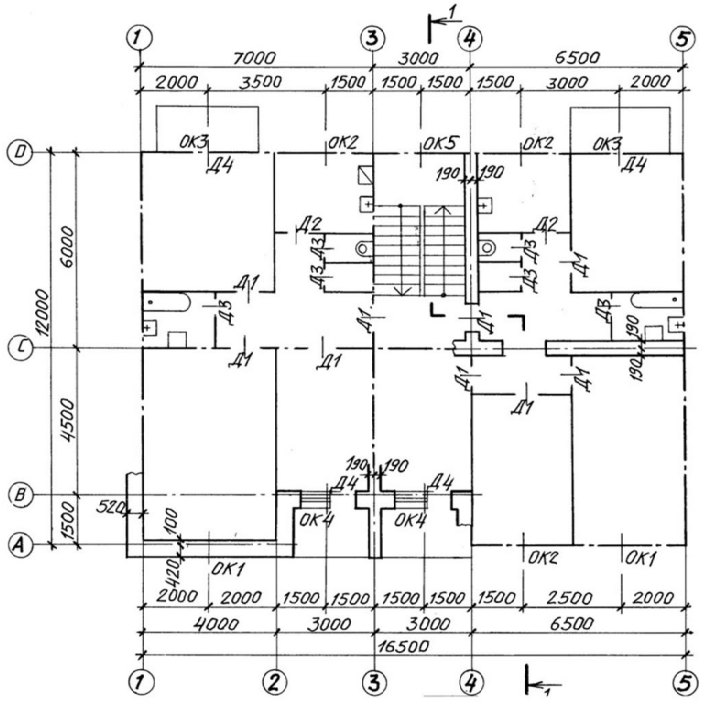
1
3
4
5
7000
3000
6500
2000
3500
1500
1500
1500
1500
3000
2000
ОК3
ОК2
ОК5
ОК2
ОК3
Д4
Д4
190
190
Д2
Д2
Д3
Д3
Д1
Д1
Д1

Elevation 1-6

Sketch of the plan 2 floor

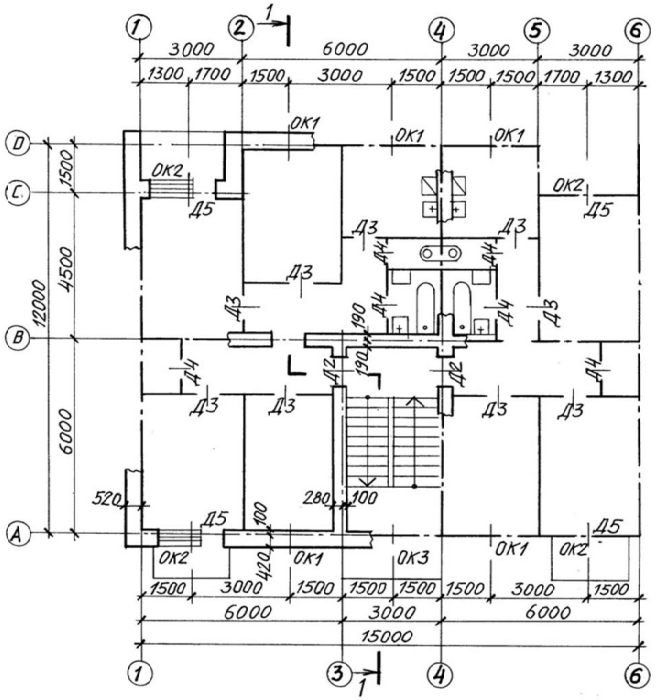

Section 1-1

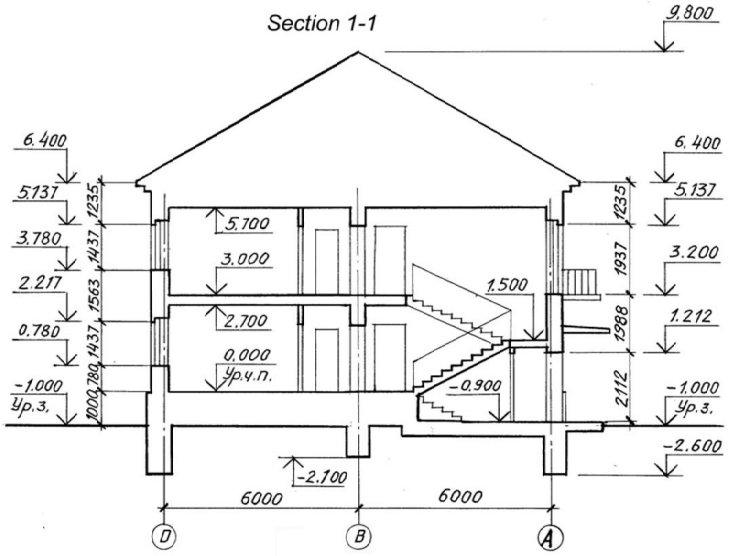

Task 5

Elevation 1-6

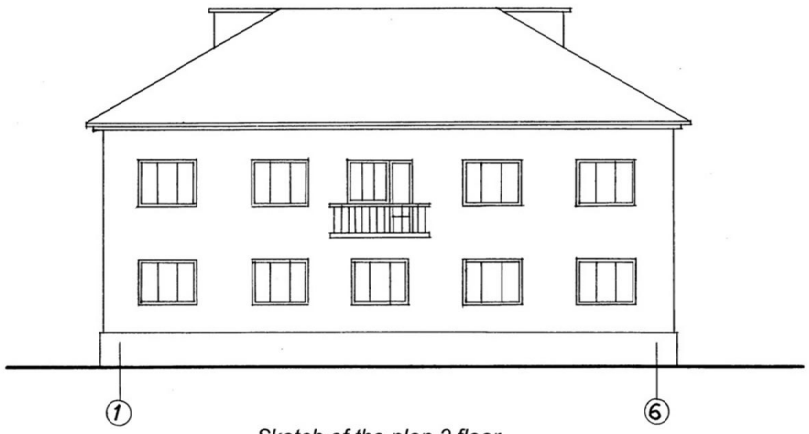

Sketch of the plan 2 floor

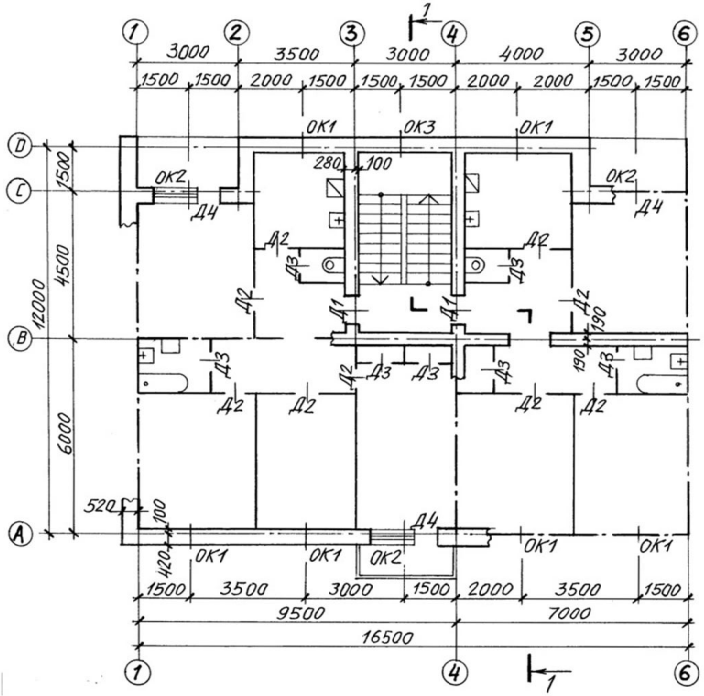

Section 1-1

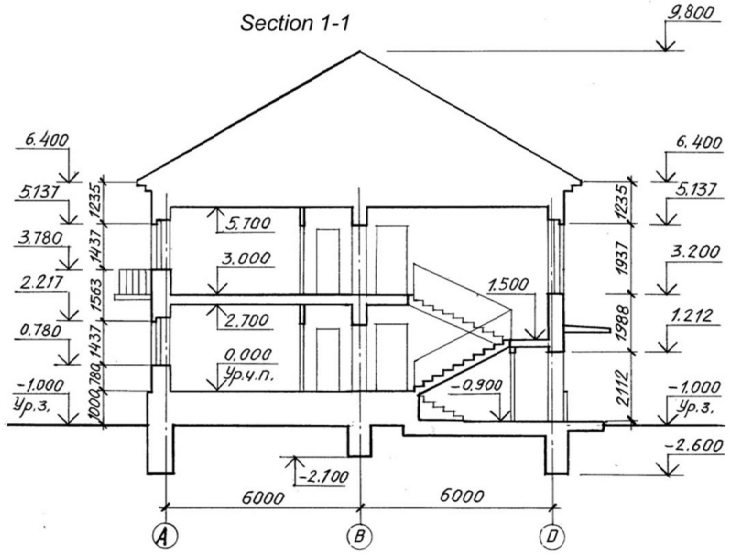

Task 6

Elevation 1-6

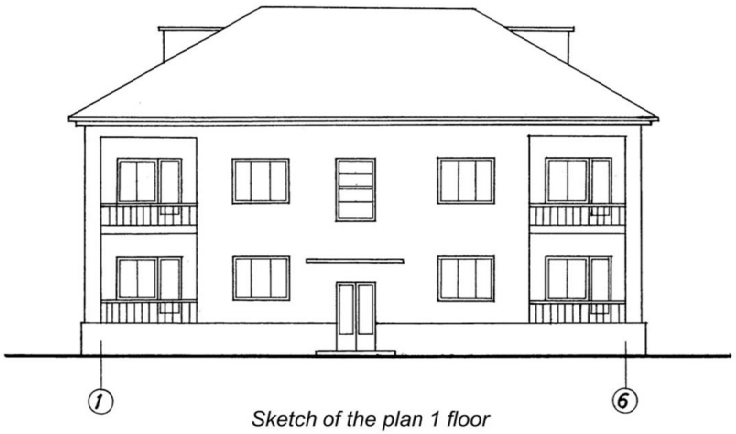

Sketch of the plan 1 floor

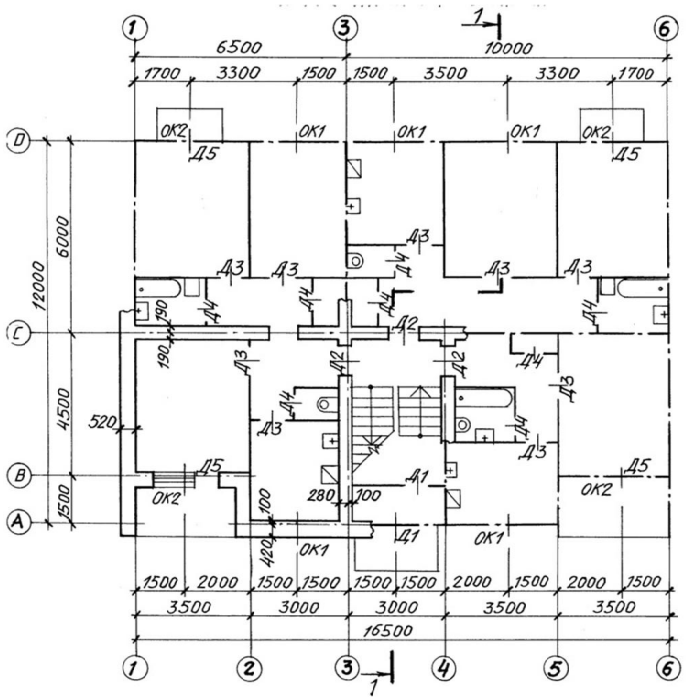

Section 1-1

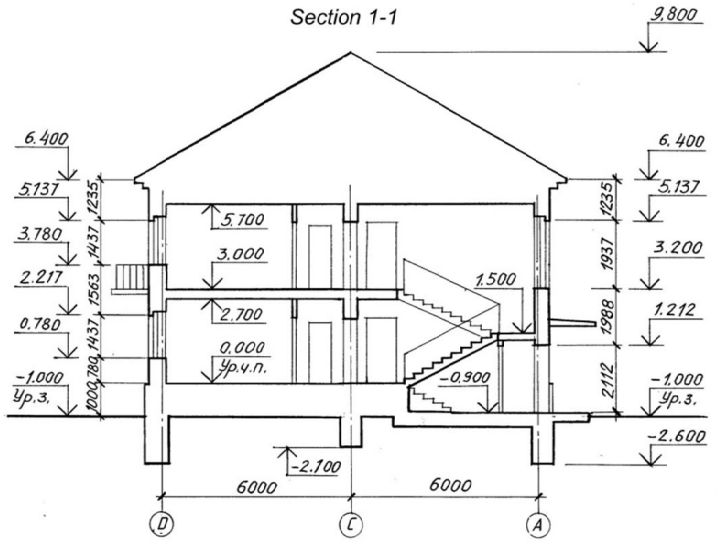

Task 7

Elevation 1-5

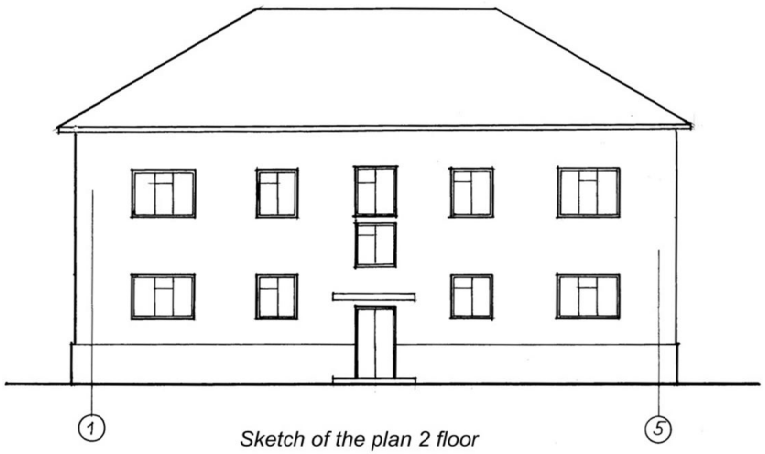

Sketch of the plan 2 floor

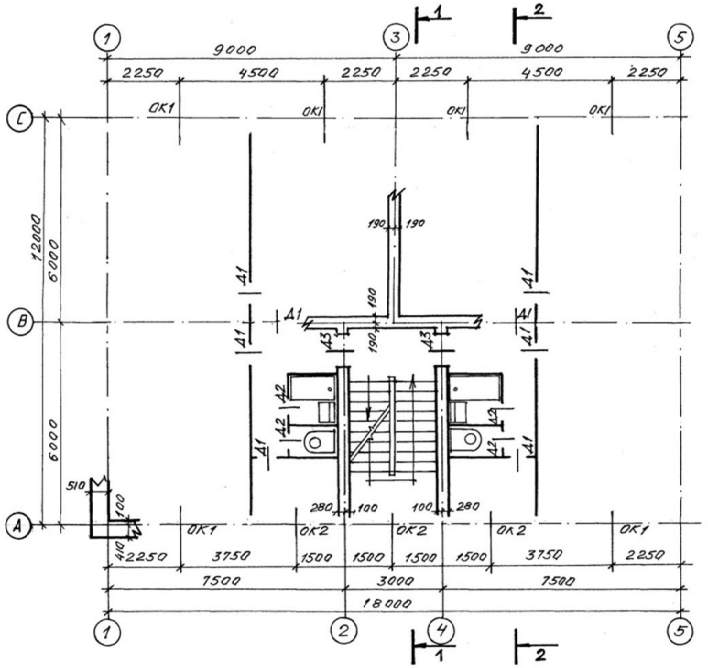

Section 1-1

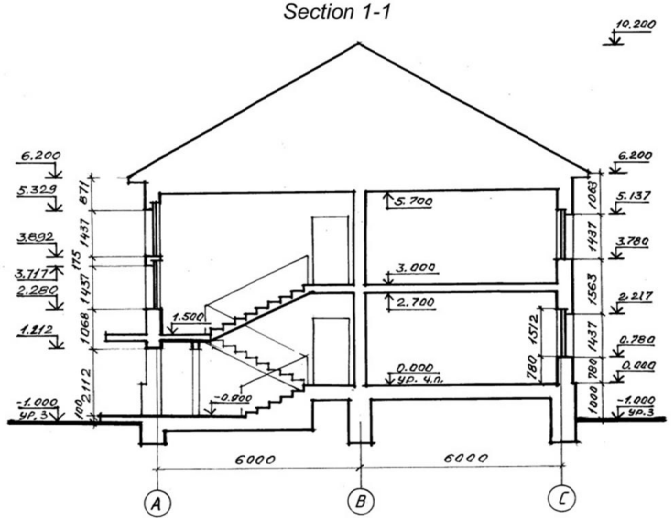

Task 8

Elevation 1-5

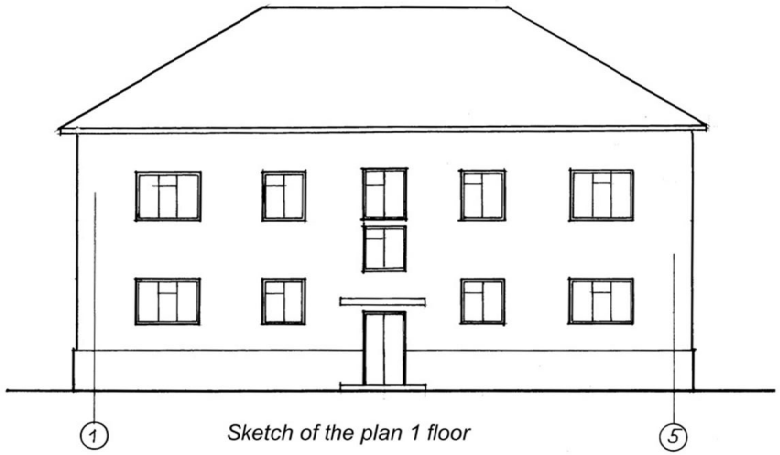

Sketch of the plan 1 floor

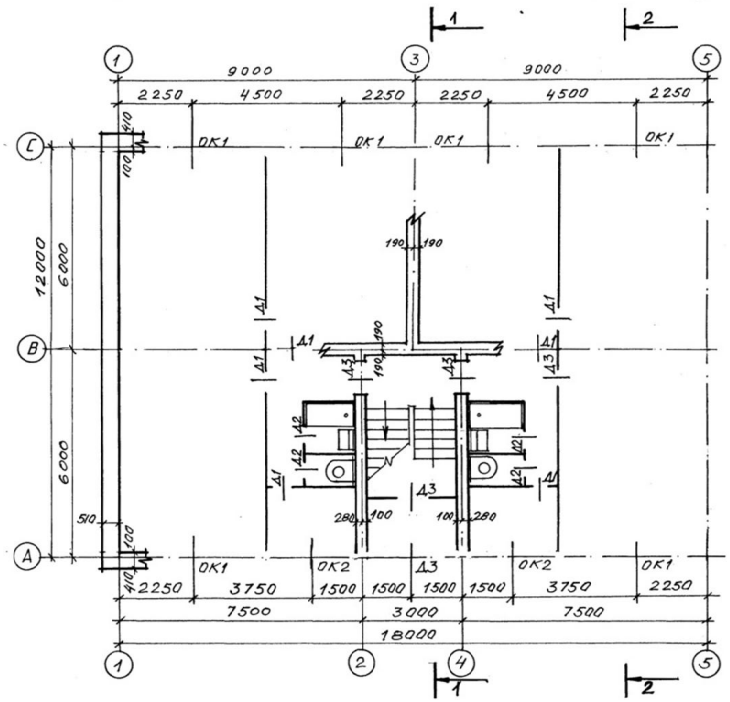

Section 1-1

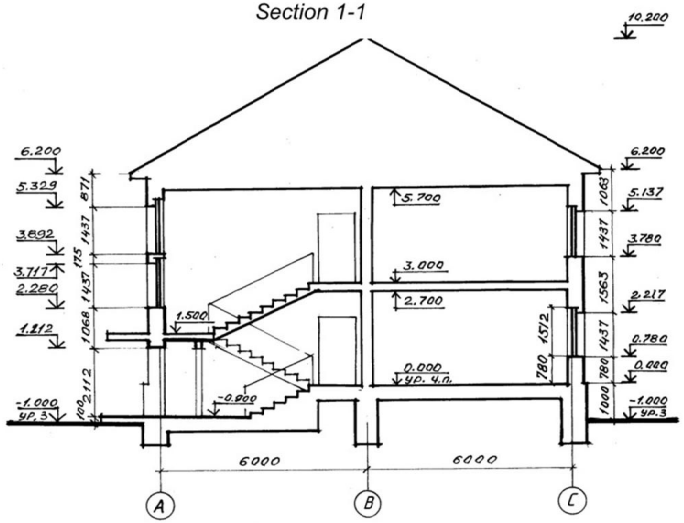

Task 9

Elevation 1-6

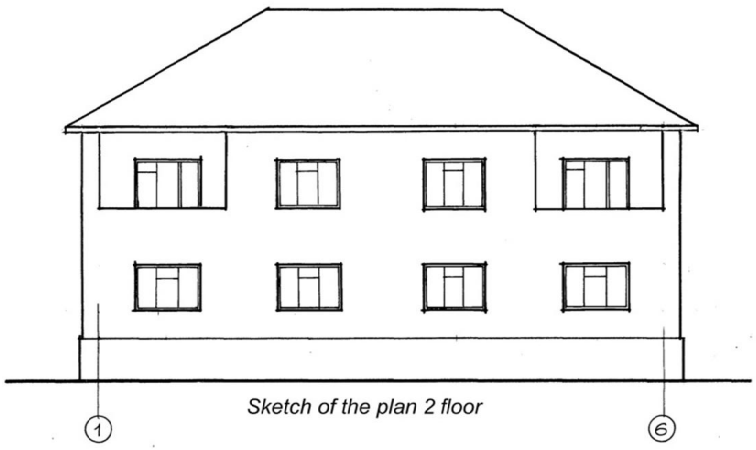

Sketch of the plan 2 floor

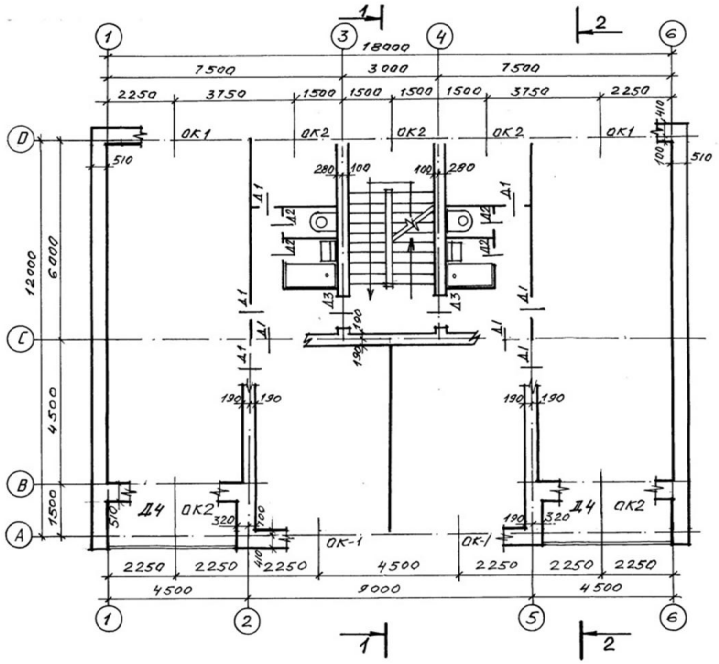

Section 1-1

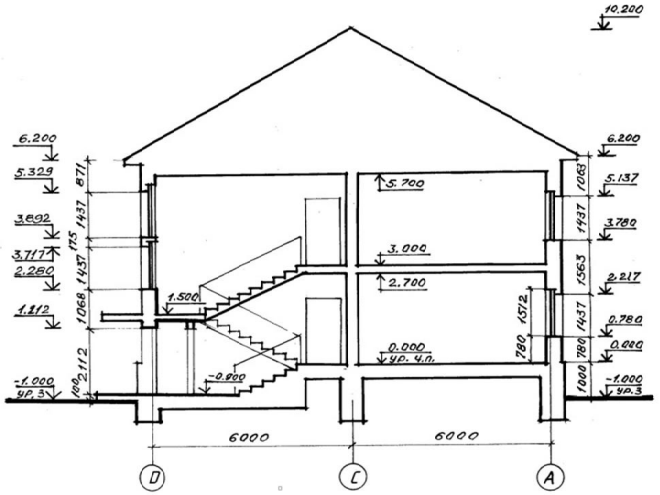

Task 10

Elevation 1-6

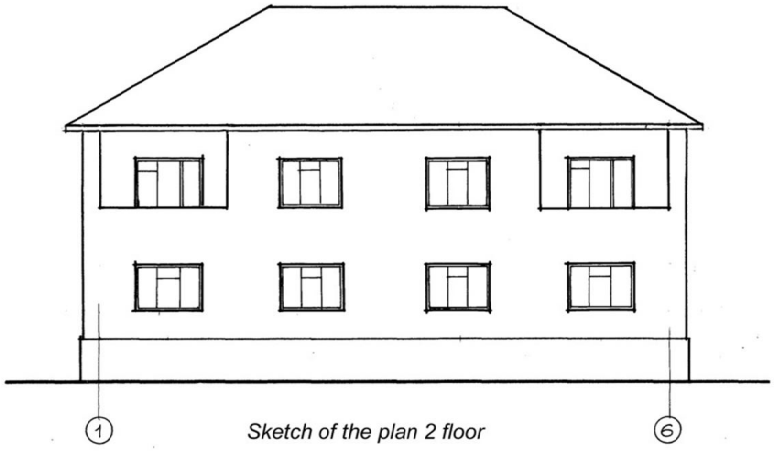

Sketch of the plan 2 floor

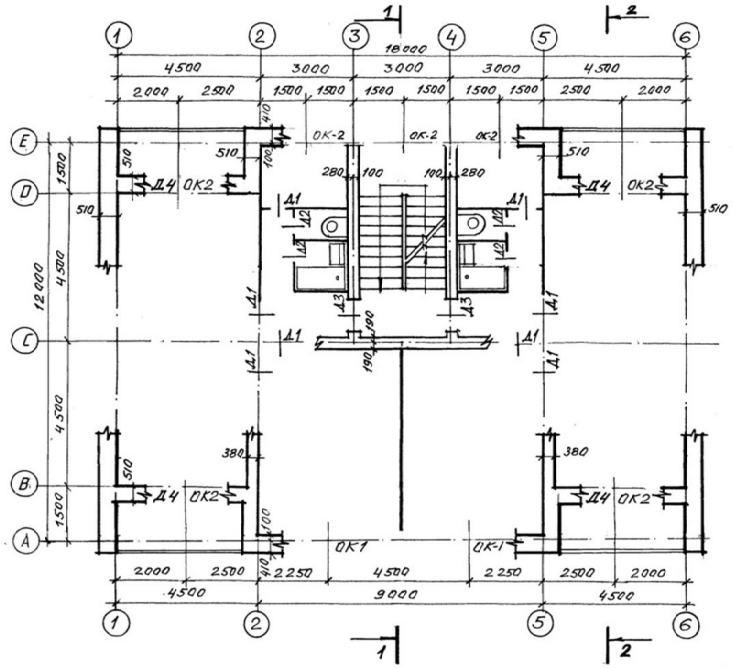

Section 1-1

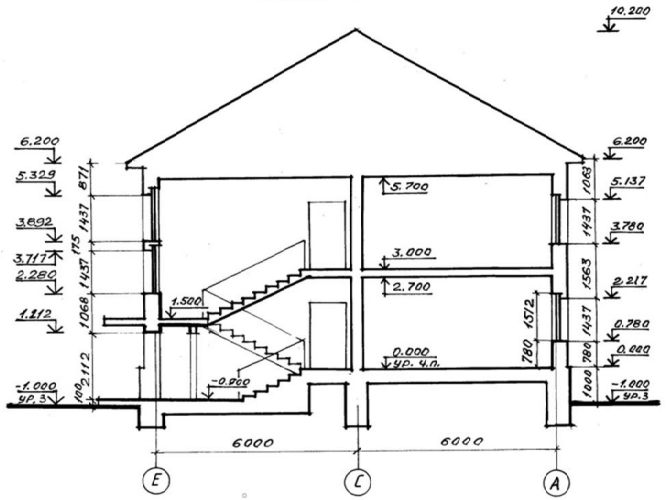

Task 11

Elevation 1-7

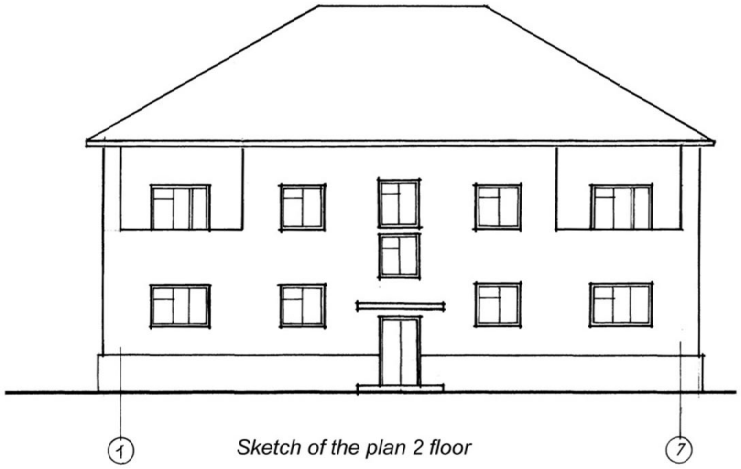

Sketch of the plan 2 floor

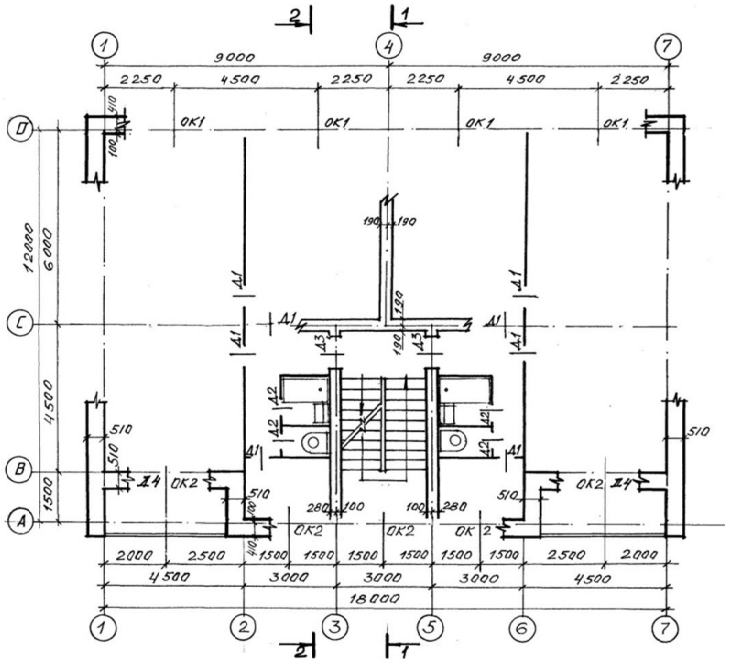

Section 1-1

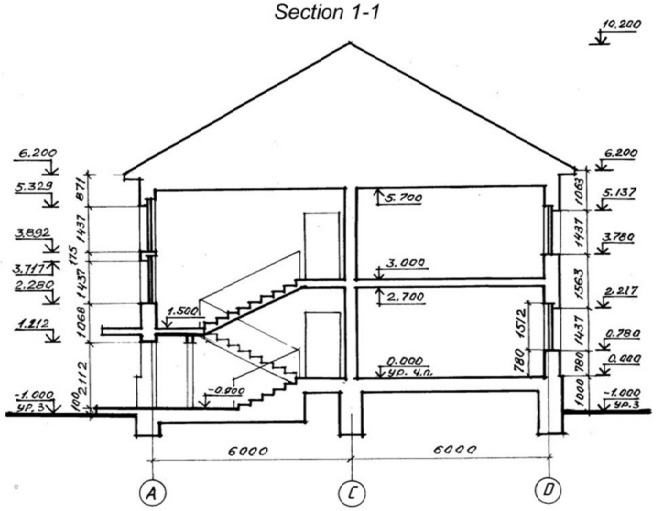

Task 12

Elevation 1-6

Section 1-1

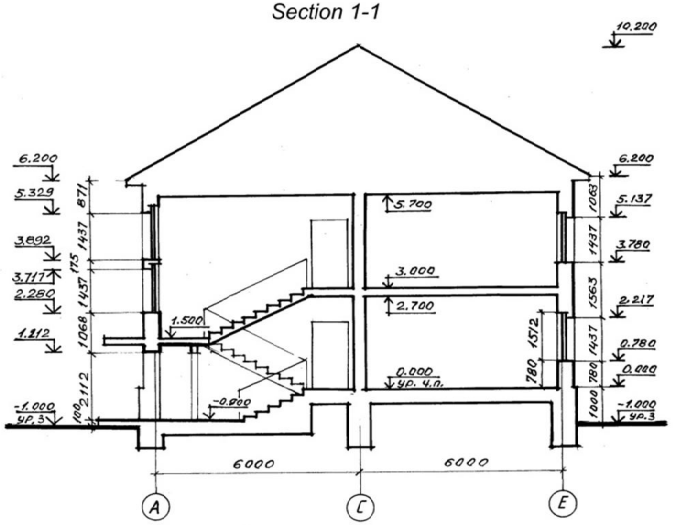

Sketch of the plan 2 floor

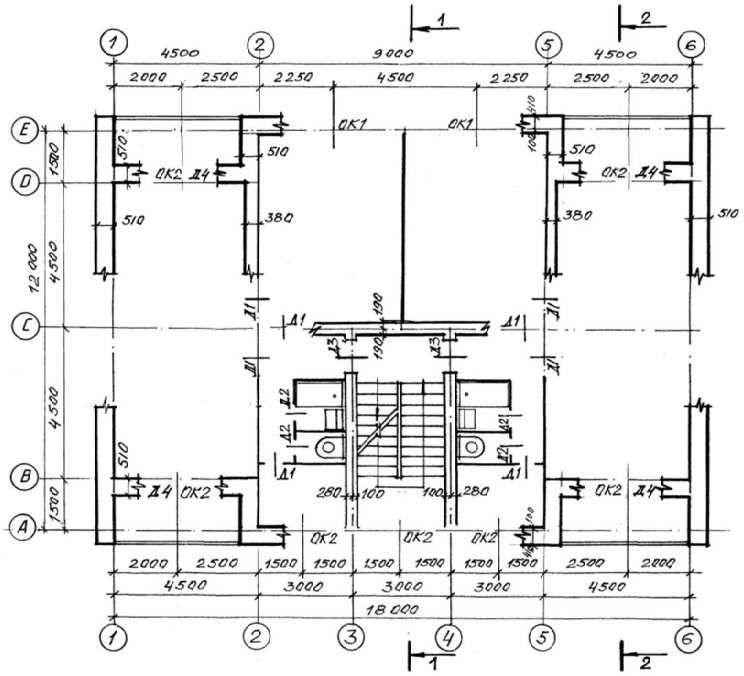

Task 13

Elevation 1-6

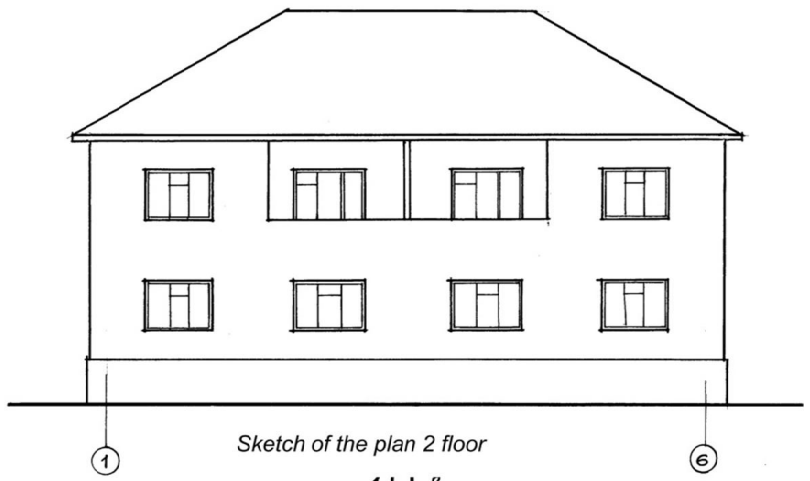

Sketch of the plan 2 floor

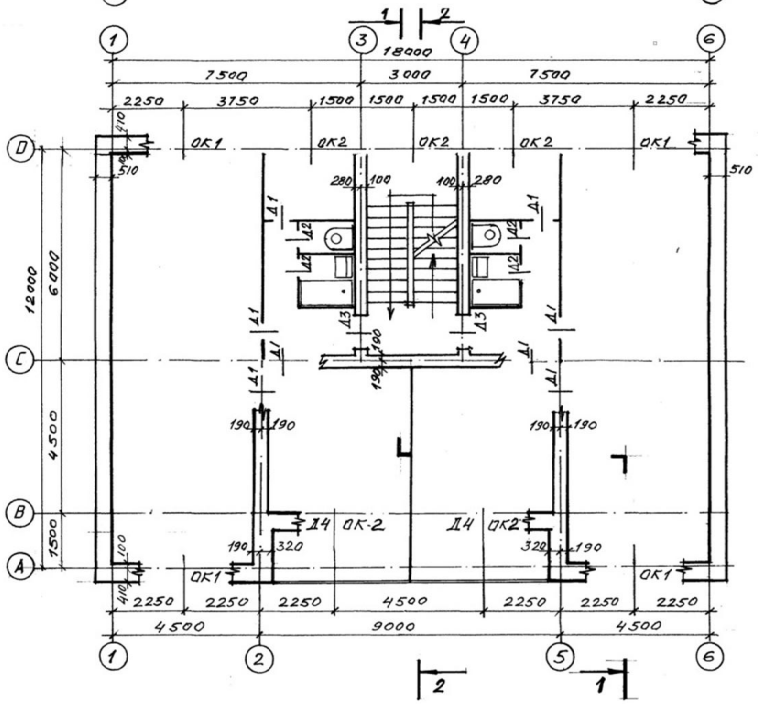

Section 1-1

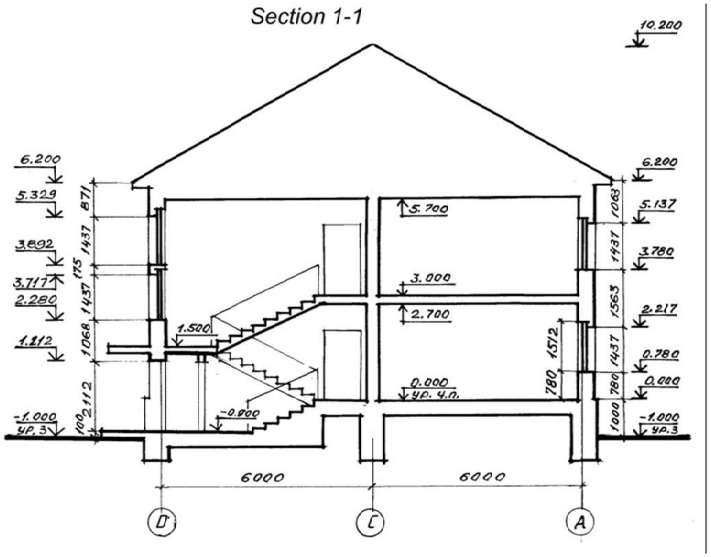

Task 14

Example of the drawing floor plan

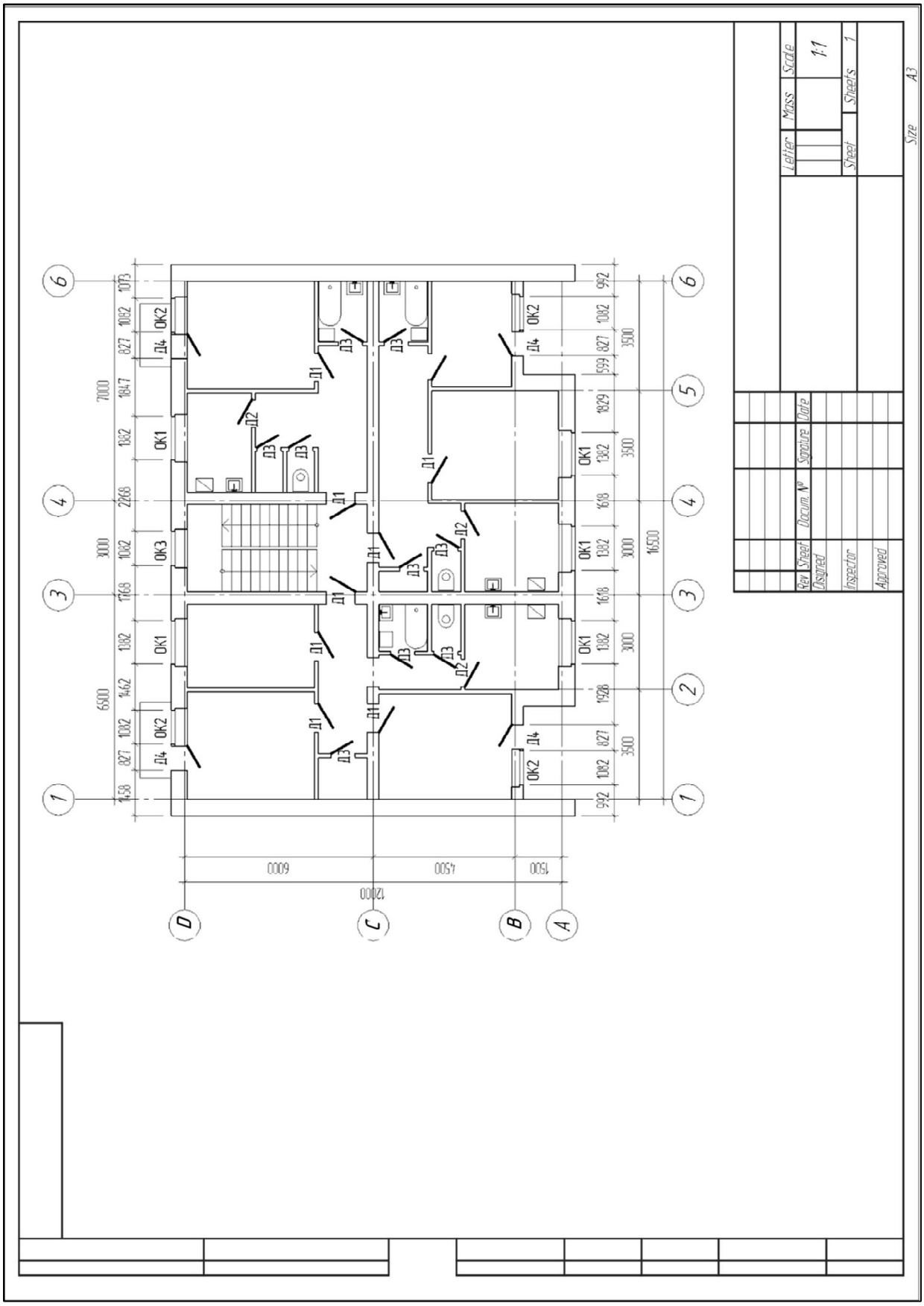

Example of the section drawing

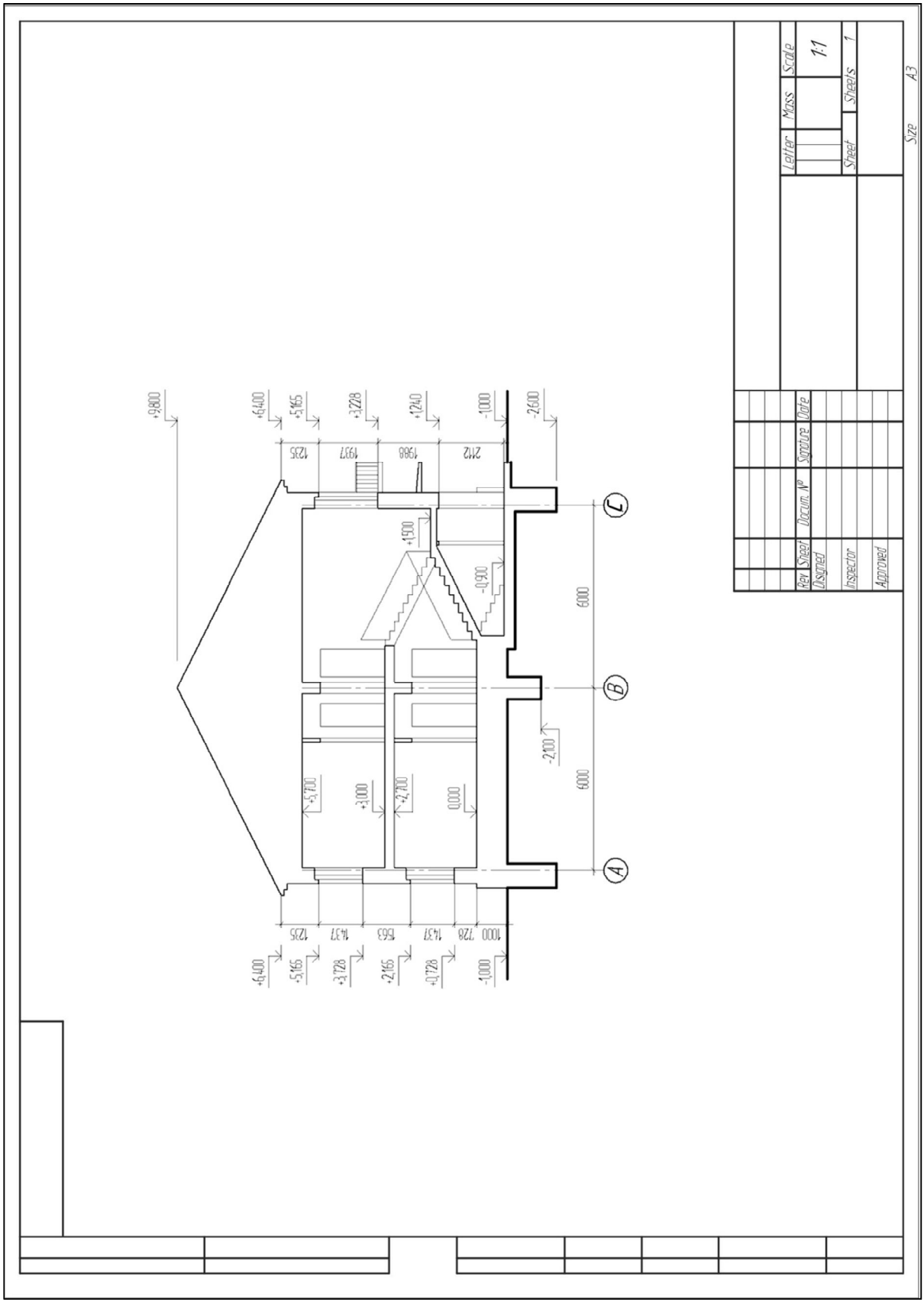

Example of the elevation drawing

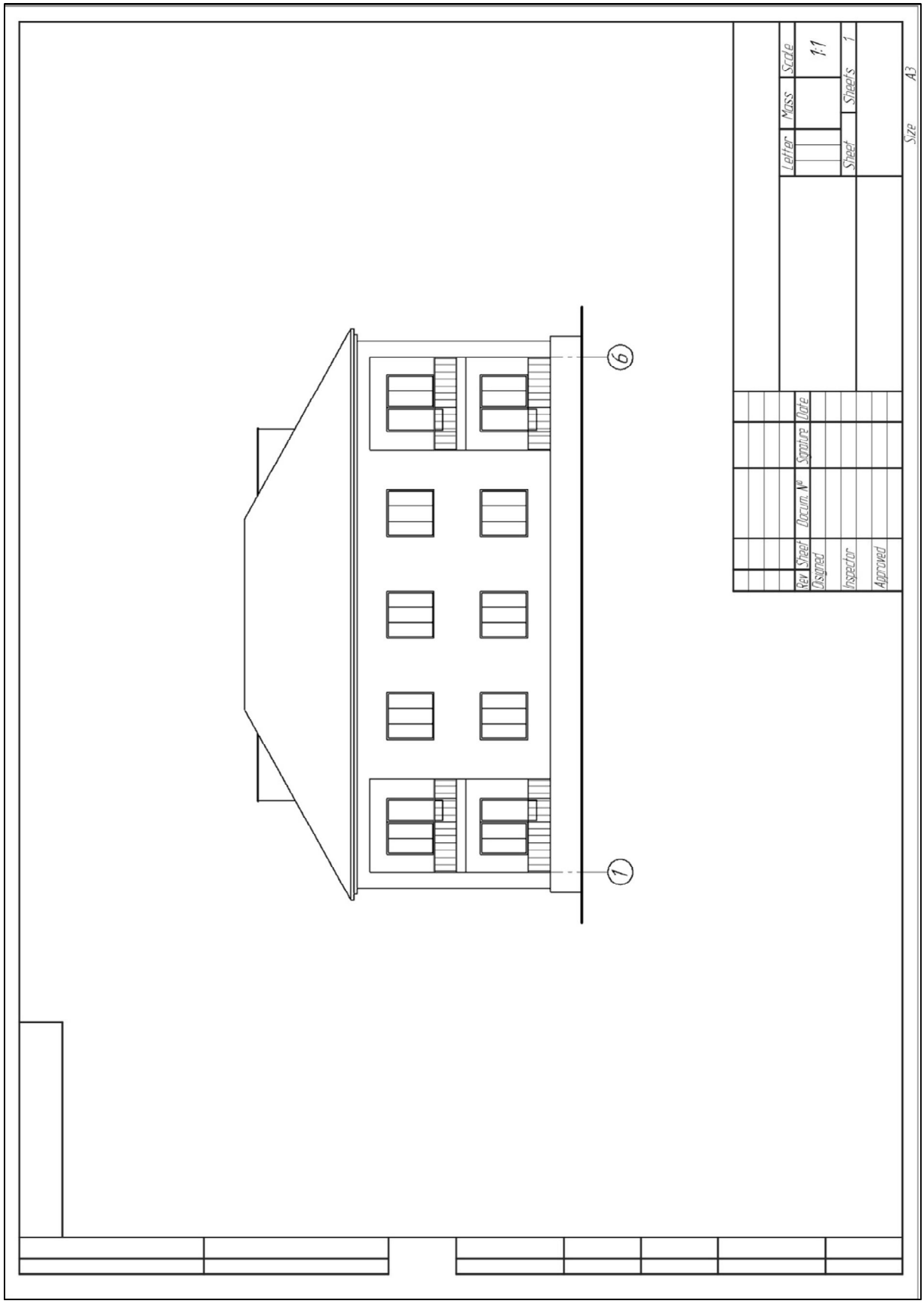

REFERENS

1. Morling K. Geometric and Engineering Drawing / K. Morling. – USA, 2010. – 360 p.

2. Evans P. The Graphic Design Reference & Specification Book : Everything Graphic Designers / P. Evans, D. Sherin. – Gloucester, MA : Rockport Publishers Inc., 2013. – 322 p.

3. Інженерна та комп'ютерна графіка : Підручник / В. Є. Михайленко та ін. – Київ : Вища школа, 2000. – 341 с.

4. Потемкин А. К. Инженерная и компьютерная графика / А. К. Потемкин. – Москва : ДМК Пресс, 2001. – 592 с.

Навчальне видання

Методичні вказівки
для самостійної роботи
з курсу

«ІНЖЕНЕРНА ГРАФІКА»

(для студентів 1 курсу денної та заочної форм навчання освітнього рівня «бакалавр» спеціальності 241 – Готельно-ресторанна справа)

(Англ. мовою)

Укладачі: **ЛЮБЧЕНКО** Марія Анатоліївна,
ДЕМИДЕНКО Тетяна Павлівна

Відповідальний за випуск *В. І. Лусь*

За авторською редакцією

Комп'ютерний набір *М. А. Любченко*

Комп'ютерне верстання *І. В. Волосожарова*

План 2016, поз. 66 М

Підп. до друку 29.08.2016 р. Формат 60×84/16
Друк на ризографі Ум. друк. арк. 2,5
Зам. № Тираж 50 пр.

Видавець і виготовлювач:
Харківський національний університет
міського господарства імені О. М. Бекетова,
вул. Революції, 12, Харків, 61002
Електронна адреса: rectorat@kname.edu.ua
Свідоцтво суб'єкта видавничої справи:
ДК № 4705 від 28.03.2014 р.