University of Pennsylvania
ScholarlyCommons

Senior Design Reports (CBE)

Department of Chemical & Biomolecular Engineering

4-2016

Retrofit of Corn Ethanol Plant to Produce Biobutanol through Fermentation

Alexandra H. Dias-Lalcaca
University of Pennsylvania, aldias@seas.upenn.edu

Ariel M. Shaulson
University of Pennsylvania, shaulson@seas.upenn.edu

Joanna P. Wollman
University of Pennsylvania, wjoanna@seas.upenn.edu

Follow this and additional works at: http://repository.upenn.edu/cbe_sdr

Part of the Biochemical and Biomolecular Engineering Commons

Dias-Lalcaca, Alexandra H.; Shaulson, Ariel M.; and Wollman, Joanna P., "Retrofit of Corn Ethanol Plant to Produce Biobutanol through Fermentation" (2016). *Senior Design Reports (CBE)*. Paper 87.
http://repository.upenn.edu/cbe_sdr/87

This paper is posted at ScholarlyCommons. http://repository.upenn.edu/cbe_sdr/87
For more information, please contact repository@pobox.upenn.edu.

Retrofit of Corn Ethanol Plant to Produce Biobutanol through Fermentation

Abstract
The depletion of natural gas resources coupled with the improved technologies for biofuel production present a favorable scenario for entry into the biobutanol market. This process aims to produce butanol at a competitive price to oil and natural gas produced from petrochemical processes. As such, the proposed design takes an existing 40MM gpy corn ethanol plant and retrofits the plant to produce butanol via continuous fermentation of corn using a genetically engineered strain of Clostridia.

The proposed design consumes 14.5 million bushels of corn per year and produces acetone, butanol and ethanol at a mass ratio of 12:58:1, respectively. The corn is undergoes traditional wet mill processing upstream, and is then fed as a slurry to the fermenters. The liquid fermentation products pass through liquid-liquid extraction followed by distillation to recover the butanol and acetone. The solids pass through a DDGS separation section and the vapor phase leaving the fermenters is combusted.

This process intends to produce butanol, acetone, and DDGS for sale in the market. The plant has the capacity to operate 330 days per year and to produce 21.7MM gpy of butanol at 99.5% purity, 2.8MM gpy of acetone at 93.2% purity and 182,509 metric tons of DDGS per year. The plant is located in the Midwest United States in the Corn Belt. It has a return on investment of 12.07%.

Disciplines
Biochemical and Biomolecular Engineering | Chemical Engineering | Engineering

This working paper is available at ScholarlyCommons: http://repository.upenn.edu/cbe_sdr/87

University of Pennsylvania
School of Engineering and Applied Science
Department of Chemical and Biomolecular Engineering
220 South 33rd Street
Philadelphia, PA 19104

Dear Dr. Holleran and Professor Fabiano,

Enclosed you will find our written report and solution to the design project proposed to us by Mr. Bruce Vrana, of Dupont, *Biobutanol*. The proposed process design is for the retrofitting of an existing 40MM gpy Corn to Ethanol plant to produce biobutanol through continuous fermentation. A genetically engineered strain of Clostridia is used in fermentation to selectively produce acetone, butanol and ethanol in a ratio of 12:58:1. The fermentation broth is then filtered to remove solids for dried distiller's grains with solubles (DDGS) processing and the remaining liquids are sent to liquid-liquid extraction. Mesitylene is used as a solvent to separate the water and organic products, and a distillation train follows to recover acetone and butanol to purities of 99.5% and 93.2%, respectively to be sold. The existing plant is located in the Midwest in the Corn Belt, and thus water is conserved and recycled to eliminate waste. The proposed plant consumes 356MM kg of corn per year and has the capacity to produce 21.7MM gpy of butanol, 2.8MM gpy acetone and 182,509 metric tons of DDGS per year.

The following report contains detailed process design, economic analysis, environmental and safety concerns, and conclusions for the retrofit of this plant. The proposed retrofit is not economically feasible at a discount rate of 15%. It yields a Net Present Value of $(911,900). It is economically viable at discount rates below 14.84%, the IRR of the project. The plant and process design is based off of a plant designed by W. Yee and Andrew McAloon for the U.S. Department of Agriculture. The separation process was modeled in Aspen Plus v8.8 and costing methods for equipment and utilities were based on those outlined in *Process Design Principles, 3rd Edition* by Seider, Seader, Lewin and Widagdo.

Thank you for your guidance throughout this project.

Sincerely,

_____
Alexandra Dias-Lalcaca

_____
Ariel Shaulson

_____
Joanna Wollman

Retrofit of Corn Ethanol Plant to Produce Biobutanol through Fermentation

Alexandra Dias-Lalcaca

Ariel Shaulson

Joanna Wollman

Advised by:

Dr. Sean Holleran

Prof. Leonard Fabiano

Project Suggested by:

Mr. Bruce Vrana

Senior Design Report

April 12, 2016

School of Engineering and Applied Science

Department of Chemical and Biomolecular Engineering

University of Pennsylvania

Table of Contents

Abstract 6

Introduction 7

Objective Time Chart 10

Market and Competitive Analysis 11
- Biobutanol Market 11
- Acetone Market 13
- DDGS Market 14

Preliminary Process Synthesis 16

Assembly of Database 19

Process Flow Diagrams, Process Descriptions, and Unit Descriptions 22
- Overall Process Description 24
- Corn Processing: Process Description 26
- Liquefaction: Process Description 30
- Fermentation: Process Description 41
- Fermentation: Equipment Descriptions 47
- Fermentation Start-Up: Process Description 50
- Fermentation Start-up: Equipment Descriptions 53
- ABE Separation: Process Description 57
- ABE Separation: Equipment Descriptions 64
- DDGS Separation: Process Description 74
- DDGS Separation: Equipment Descriptions 80

Unit Specification Sheets 84
- Distillation Column 84
- Liquid-Liquid Extractor 85
- Liquid-Liquid Extractor 86
- Heat Exchanger 87
- Heat Exchanger 88
- Heat Exchanger 89
- Heat Exchanger 90
- Heat Exchanger 91
- Heat Exchanger 92
- Heat Exchanger 93
- Heat Exchanger 94
- Fermenter 95
- Rotary Drum Filter 96
- Seed Fermenter 97
- Seed Fermenter 98
- Seed Fermenter 99
- Seed Fermenter 100
- Seed Fermenter 101
- Seed Fermenter 102
- Seed Fermenter 103
- Seed Fermenter 104
- Seed Fermenter 105
- Activated Carbon Adsorbers 106

Equipment List and Cost Summary 107
Energy Balance and Utility Requirements 111
Economic Analysis 117
Fixed-Capital Investment 118
Operating Costs 119
Variable Costs 119
Fixed Costs 120
Cost of Manufacturing 121
Profitability Analysis 126
Cost Summary 126
Cash Flows 129
Profitability Measures 130
Other Important Considerations 135
Unrecovered Product 135
Environmental Considerations 137
Process Controllability and Instrumentation 137
Safety and Health Concerns 138
Concerns Regarding Continuous Fermentation 139
Plant Location, Layout and Startup 140
Fouling in Heat Exchangers 140
Water Management 141
Conclusions and Recommendations 143
Acknowledgements 145
References 146
Appendix A: Sample Calculations 151
Acid Build-Up 151
Liquid-Liquid Extractor Sizing 151
Amount of Solvent Needed Per Year 152
Fermenter Calculations 152
S-Reactor Calculations 154
Cost of Nitrogen 155
Appendix B: ASPEN Input Summary, Block Reports, and Stream Reports 157
Heat Exchanger, HX 101: Input Summary, Block Report, and Stream Report 157
Heat Exchanger, 312E: Input Summary, Block Report and Stream Report 161
Heat Exchanger, 313E: Input Summary, Block Report and Stream Report 164
Heat Exchanger Integration: Flowsheet 169
Heat Exchanger Integration: Input Summary, Block Report and Stream Report 169
Fermentation Flash Vessel, 405V A-C: Input Summary, Block Report and Stream Report 186
Vapor Separation Analysis, S-129, P-T Trial: Input Summary, Block Report and Stream Report 191
Vapor Separation, Thermox: Flowsheet 193
Vapor Combustion, Thermox: Input Summary, Block Report, Stream Report 194
Separation Flowsheet 200
Separation Input Summary 201
Separation Stream Reports 205
COL1 Block Report 214

COL2 Block Report....218
COL3 Block Report....221
COL4 Block Report....225
HEAT1 Block Report....229
HEAT2 Block Report....232
HEAT3 Block Report....235
HEAT4 Block Report....238
HEAT5 Block Report....241
HEAT6 Block Report....244
HEAT7 Block Report....247
HEAT8 Block Report....250
LLE1 Block Report....252
LLE2 Block Report....255
PUMP1 Block Report....258
PUMP2 Block Report....259
PURGE1 Block Report....259
PURGE2 Block Report....260
VALVE2 Block Report....260
WATERMIXER Block Report....261
MIXER1 Block Report....261
MIXER2 Block Report....262

Appendix C: Vendor Specification Sheets....263
Start-up....263
Clostridia....269
Activated Carbon Adsorbers....271

Appendix D: Outside Correspondence....276
Mr. Bruce Vrana....276

Appendix E: Material Safety Data Sheets....277

Abstract

The depletion of natural gas resources coupled with the improved technologies for biofuel production present a favorable scenario for entry into the biobutanol market. This process aims to produce butanol at a competitive price to oil and natural gas produced from petrochemical processes. As such, the proposed design takes an existing 40MM gpy corn ethanol plant and retrofits the plant to produce butanol via continuous fermentation of corn using a genetically engineered strain of Clostridia.

The proposed design consumes 14.5 million bushels of corn per year and produces acetone, butanol and ethanol at a mass ratio of 12:58:1, respectively. The corn is undergoes traditional wet mill processing upstream, and is then fed as a slurry to the fermenters. The liquid fermentation products pass through liquid-liquid extraction followed by distillation to recover the butanol and acetone. The solids pass through a DDGS separation section and the vapor phase leaving the fermenters is combusted.

This process intends to produce butanol, acetone, and DDGS for sale in the market. The plant has the capacity to operate 330 days per year and to produce 21.7MM gpy of butanol at 99.5% purity, 2.8MM gpy of acetone at 93.2% purity and 182,509 metric tons of DDGS per year. The plant is located in the Midwest United States in the Corn Belt. It has a return on investment of 12.07%.

Introduction

Biofuels are considered to be an attractive substitute to petroleum and natural gas. Not only are they much more environmentally friendly, they are also fully compatible with current engines and fuel infrastructure. As such, biofuels are preferable in the long run since they have fewer carbon emissions, and will not require major changes to existing technologies ("Renewable Hydrocarbon Biofuels", 2015).

Butanol is a superior biofuel compared to ethanol for numerous reasons. Firstly, butanol has a higher energy density. Additionally, it is a heavier chemical so it is less volatile and safer to store. Its higher hydrophobicity makes it easier to handle within existing infrastructure, pipelines and storage tanks of current processes, and it is less corrosive to commonly used materials than ethanol (Strombaugh, 2012). It is also possible to use butanol in conventional engines, and it will make some fuels, such as diesel, burn more completely. Both ethanol and butanol can be blended into gasoline; however, butanol can be blended at a higher ratio and can be blended at the refinery due to its larger shelf life (Grimaldi, 2011). This characteristic of butanol makes it particularly favorable. Although ethanol is currently inexpensive and relatively easy to manufacture at high capacities, novel biobutanol processes allow for the exploration of opportunities that increase profit margins. The proposed process detailed in this report aims to prove that existing ethanol plants can be retrofitted and invested in to profitably produce butanol.

Traditionally, corn ethanol plants use enzymes to convert starch to glucose and then yeast fermentation to produce ethanol. Butanol production from corn is done through acetone, butanol, and ethanol (ABE) fermentation. Original ABE fermentation processes had several issues that reduced their profitability. Firstly, solvent production was limited by the toxicity of the products to the bacteria, a common concern in biological processes. Additionally, the products are

produced by common bacteria strains at a ratio of 3:6:1 acetone, butanol, and ethanol by mass. Genetic engineering of the Clostridia bacteria has prompted the development of butanol selective and resistant strains. These strains will be used in the proposed process for continuous fermentation. Continuous fermentation allows for a higher yield of solvents and eliminates the potential for bacteria death resulting from toxicity (Walther, 2013). Following the fermentation, the vapor outlet is burned and the liquid fermentation broth is filtered so that the solids can move to DDGS processing. The remaining liquid product enters a liquid-liquid extractor, and mesitylene is used to extract the organic products. The separation then utilizes a distillation train of four columns and an additional solvent extraction to purify and recover the products (Ezeji, 2004).

The proposed plant is modeled as a retrofit of an existing U.S. Department of Agriculture plant that produces 40MM gpy of ethanol. This process aims to utilize as much equipment as possible and alter or purchase equipment as necessary to produce ABE through fermentation and to separate the products such that butanol and acetone can be sold. Dried distiller's grains with solubles will also be sold as a co-product.

A key concern in process development included achieving the desired purities of 93.2% by weight for acetone and 99.5% by weight for butanol. A rigorous separation was developed to handle multiple azeotropes in the liquid phase. Additionally, the process needed to have net zero water discharge, so all water that is not lost to evaporation must be recycled. Environmental concerns are also pressing and the plant was designed to be energy efficient and to take into consideration chemical release to the environment. The profitability and required investments are outlined in this report and include sensitivity analyses for fluctuating market prices of both raw materials and products. The overall success of this process design will be gauged by examining

the profitability of the new process and by comparison of the proposed process with the potential profits from the plant continuing ethanol production. The proposed plant will operate 330 days a year and is located in the Midwest United States, specifically in the Corn Belt.

Objective Time Chart

Project Name	Biobutanol
Project Champions	Mr. Bruce Vrana, Dr. Sean Holleran, and Professor Leonard Fabiano
Project Leaders	Alexandra Dias-Lalcaca, Ariel Shaulson, and Joanna Wollman
Specific Goals	Retrofit an existing U.S. corn ethanol plant to make butanol through a novel fermentation route. Determine a process design to make use of existing assets and commercialize a biobutanol process in the U.S. corn belt.
Project Scope	In-scope: • Find an existing U.S. corn ethanol plant that produces approximately 50 MM gpy ethanol • Produce butanol by fermentation of corn • Separation to 93.2% purity of acetone and 99.5% purity of butanol products • Zero-discharge of process water • Energy and utilities balance • Economic analyses to determine project feasibility • Socially conscious process that considers both environmental and safety concerns Out-of-scope: • Design of 50 MM gpy ethanol plant • Butanol production by other chemical pathways such as two-stage fermentation and by catalyzed reactions • Detailed understanding of genetically modified organism • Detailed procedure for cleaning the plant between semi-batch processes • Distribution of products
Deliverables	• Design report including Business Opportunity Assessment and Technical Feasibility Assessment • Presentation of findings and conclusions
Timeline	Complete process design and analysis by April 12, 2016

Market and Competitive Analysis

Biobutanol Market

Current selling price: $2,900.00 per tonne

Sales from product: $2.90 per kg biobutanol sold

With increasing environmental concerns regarding excessive greenhouse gas emissions and reduction of carbon footprints, there is a rise in demand for "green" products. Butanol is a key raw material in the production of paints, coatings, plasticizers, adhesives, and pharmaceuticals, and is also a fuel. Recent increased demand for bio-based products, such as paints and coatings, elevates demand for bio-based butanol, or "biobutanol" ("Bio-butanol Market Analysis By Application", 2015).

In addition to environmental concerns, petroleum resources are being depleted rapidly, so there is a need for alternative fuels; one viable option is biobutanol ("Bio-butanol Market Analysis By Application", 2015). Moreover, the Environmental Protection Agency (EPA) has presented numerous data showing that hydrocarbon, carbon monoxide, and nitrogen oxide releases can be greatly reduced by the use of biobutanol ("What is biobutanol?", n.d.). Because of the increased demand for green products, of which butanol is a key raw material, and the need for alternative fuels, the biobutanol market is expected to grow over the next seven years. As of 2014, the global biobutanol market was estimated to be worth $7.86 billion dollars. Due to their large and growing textile and cosmetic industries, China, India, and Brazil are expected to have the fastest growing biobutanol markets. While Asia may have the highest demand for biobutanol, North America has a significant market for it. Strict environmental and governmental policies regarding eco-friendly products and emissions reductions in the United States are expected to

grow the biobutanol market domestically ("Bio-butanol Market Analysis By Application", 2015).

Currently, most of the biobutanol produced globally is made from sugarcane. In the past few years, however, there has been a tight supply of sugarcane, so availability of it in the future is uncertain ("Bio-butanol Market Analysis By Application", 2015). Conversely, corn is widely available, especially in the United States. The U.S. is the largest producer of corn in the world, producing 3.45 million metric tons in 2015 ("Corn Production by Country in 1000 MT", 2016). Furthermore, 10-20% of corn produced in the U.S. is exported, which constitutes 40% of global corn exports (Warner, 2008). The corn input of the proposed biobutanol process presented will likely never be difficult to obtain, or have a volatile market.

The major players in the biobutanol market are Gevo, Green Biologics, Butamax, Cathay Industrial Biotech, Cobalt Technologies, and Solvay ("Bio-butanol Market Analysis By Application", 2015). Green Biologics, Ltd. operates a 300-liter per batch pilot plant in England. They are joining with Laxmi Organic Industries, a producer of several industrial organic materials, to build a commercial-scale biobutanol plant in India. The plant will use a sugarcane feedstock and produce 10,000 metric tons of butanol per year. One advantage Green Biologics may have is that the plant will be located in India, a place determined to have a large and growing biobutanol market. However, competitive advantages of the biobutanol production presented outweigh the fact that they are located closer to a larger market, since the proposed process produces significantly more biobutanol per year; 67,500 metric tons. It also uses inputs that will likely be more available than sugarcane in the future (Kram, n.d.). Cobalt Technologies has raised an impressive $25 million in equity to commercialize their biobutanol production (Kram, n.d.). Finally, Gevo is considered to be the market leader and began commercial

production of 18MM gpy in 2012. They converted an existing corn ethanol plant in Luverne, Minnesota. While the following plant presented produces about the same about of biobutanol per year, 21.7MM gpy, it produces n-butanol, whereas Gevo is producing isobutanol, a lesser used option ("Biobutanol", n.d.).

Acetone Market

Current selling price: $1,399.00 per tonne

Sales from co-product: $0.163 per kg biobutanol sold

Acetone is another valuable co-product of biobutanol production. It is used by itself as a direct solvent and as a raw material in many syntheses for various chemicals. Other uses include in laboratory, cosmetic, medical, and domestic applications ("Acetone Market Analysis", n.d.). In 2014, the global consumption of acetone was about 5.9MM metric tons. The market is expected to have healthy growth between now and 2020, with global consumption expected to increase to 7.2MM metric tons ("Global Acetone Market", n.d.). The expected market growth is attributed to increased demand, since acetone has a wide range of applications. For example, acetone is used in the production of liquid-crystal displays (LCDs). LCDs are becoming increasingly popular, so the need for acetone will increase accordingly. This is considered a major market grower for acetone ("Acetone Market Analysis", n.d.). The EPA recently set environmental regulations regarding acetone, which will negatively affect growth of the global acetone market, however, because the process presented produces bio-based acetone, these regulations do not apply. Bio-based acetone will be a new overall market ("Global Acetone Market", n.d.).

The primary consumer of acetone is Asia, with 41% of global consumption ("Global Acetone Market", n.d.). Asia is the largest consumer of acetone because of its large electronics and automotive industries. Additionally, this market has the highest growth rate because of the ever-growing Asian automotive segment. The major companies involved in acetone production are large and established chemical companies, such as INEOS Phenol, Sunoco, Mitsui, Shell, and DOW Chemical ("Acetone Market Analysis", n.d.). A small butanol plant would not compete for market share against these competitors, however the acetone market, especially the bio-acetone market, is growing and profitable. If acetone is a co-product and easily recoverable in butanol production, it would be competitive and profitable to sell in this market as well.

DDGS Market

Current selling price: $135.00 per tonne

Sales from co-product: $0.372 per kg biobutanol sold

DDGS is a valuable co-product of biobutanol production that is used primarily as a feed for cattle. This market is growing: in 2006, the United States exported about 1MM tons of DDGS. Just five years later, in 2011, 11MM tons of DDGS were exported from the United States. This growth parallels the growth in bioethanol and biobutanol production, and the U.S. Department of Agriculture Economic Research Service (USDA ERS) projects further growth ("Biofuel Feedstock & Coproduct Market Data", 2016). About 25% of the DDGS produced in the United States is exported ("Biofuel Feedstock & Coproduct Market Data", 2016). China was the largest market to receive these exports ("DDGS", n.d.).

Corn used to be the primary ingredient of livestock feed. However, ethanol production expansion in recent years has increased the demand for corn, which has raised the price of corn.

DDGS, being a co-product, has been able to be sold more cheaply. It has gained the largest share in the market for livestock feed. In 2011, it accounted for about 17.5% of the livestock feed used in the U.S., which is the second largest percentage after corn ("Biofuel Feedstock & Coproduct Market Data", 2016). While DDGS is currently used as a main ingredient in cattle feed, it is expected that it will be able to be used in other livestock feed with new technology to make it more digestible for hogs and poultry ("Biofuel Feedstock & Coproduct Market Data", 2016). It is clear that the DDGS market is steadily growing with few inhibiting factors. This is a safe and profitable market to enter, especially if DDGS is a co-product of production.

Preliminary Process Synthesis

In determining how to approach the retrofit of a corn ethanol plant to produce biobutanol several aspects of the design were considered. Firstly, a decision needed to be made regarding an optimal reaction. Pathways to butanol that were evaluated included catalyzed synthesis from ethanol, two-stage fermentation via the production of acetic and butyric acid, and ABE production via batch fermentation or continuous fermentation. It was determined that ABE fermentation was the most optimal and would be the most cost effective with regards to salvaging the existing infrastructure of the corn ethanol plant. Additionally, ABE fermentation was chosen rather than two-stage fermentation by comparison of their potential yields.

Early research showed that Clostridia are the appropriate bacteria for ABE fermentation. Continuous fermentation was chosen rather than batch fermentation because Clostridia are solventogenic and are thus killed by the organic product if it exceeds a certain concentration in the reactor (Ezeji et al., 2007). Continuous production and removal of solvent allows for both increased production over time and eliminates the inhibition and death of the bacteria. While there are cons to running continuous fermentation that are discussed in more detail in the Other Important Considerations Section, the increase in production outweigh the cons so long as the process has an effective controls system.

Several strains of Clostridia including Clostridium Acetobutylicum, Tyrobutylicum, and Beijerinckii were all considered, however, it was decided to use a bioengineered strain of Clostridia. Mr. Bruce Vrana highlighted the existence of these new strains and the one selected was found in U.S. Patent 8497105. This strain has a higher selectivity of butanol and an increased tolerance to butanol. The analysis presented of projected product production relies heavily on the ratio of ABE by weight described in the patent of 12:58:1.

A critical design choice then became the first phase of separation for the fermentation broth. Due to the large amount of water, relative to the organics, butanol, acetone, and ethanol, as well as the numerous azeotropes in the mixture, liquid-liquid extraction (LLE) was explored as a superior option to distillation, which would have a large utility cost associated with it. After much research, a "hybrid extraction-distillation process" (Kraemer et al., 2010) was selected as the most economical and efficient process. Furthermore, the consultants supported this decision immediately, as it was both economically sound and more efficient given the different organics and respective concentrations that exist in a butanol process and not in an ethanol one. This hybrid process also reduces the effect of the azeotropes formed between the organics and water. Another LLE was performed exactly for this reason; to overcome an acetone-water azeotrope later in the process. The solvent chosen for both of these LLEs was mesitylene. Two solvents have been explored for use in similar LLEs, oleyl alcohol and mesitylene. Oleyl alcohol was ruled out for use in this large-scale industrial process because of its high boiling point, 360°C, and its inability to remove acetone at the same capacity as mesitylene (Kraemer et al., 2010). The lower boiling point of mesitylene, 164.5^{o}C, and its higher efficiency for acetone make it favorable; it is also commonly used in industry. Mesitylene costs $2.80 per kilogram. While oleyl alcohol is slightly less expensive, the purchase of the solvent is largely a capital cost and the favorable properties of mesitylene outweighed the slightly higher cost.

Separation of the vapor outlet stream from the fermenters also posed a significant challenge. Three alternatives were considered. First, Dr. Holleran and Mr. Tieri suggested temperature and pressure changes to condense the organic products so that they could be recycled. This proved infeasible since the temperature of the stream would need to be reduced to less than -25°C at a pressure over 6 bar to condense the acetone due to the non-idealities in the

stream. ASPEN simulation results can be seen in Appendix B. Additionally, Mr. Bockrath suggested running the solvent to extract the organic products. This also did not work for acetone recovery due to its high activity coefficient. Given the environmental limitation of 40 metric tons per year of organics that can be released provided by Mr. Bockrath, the decision to combust the stream and recover the energy was made.

Upstream corn processing and DDGS processing were left almost entirely the same due to the retrofit aspect of this project. The only alteration would be the addition of a rotary drum filter, suggested by Professor Fabiano, to recover the solids exiting the fermenter to enter DDGS processing.

Assembly of Database

The cost of medium pressure steam, cooling water, chilled water, and electricity were all taken directly or derived from Seider et. al. Steam, at 10.34 bar, has a price of $0.0066/kg used, cooling water costs $0.020/$m^3$, the price of chilled water was found by finding the enthalpy that must be removed in each cyclical chilled water stream and by using the listed price of $4.00/GJ. The price of electricity used was $0.07/kWh as provided in the profitability analysis spreadsheet, and a value of $0.20/$m^3$ was used for process water.

The prices of inputs to the process are summarized in Table 1 below. The price of corn was obtained from the USDA Commodity Index, lime was obtained from a Cornell workbook, ammonia was obtained from a University of Illinois report on fertilizer prices, alpha-amylase was obtained from Ali Baba, nutrients were assumed to be $0.10 per kg based on estimates of salts found on Ali Baba, and the price of mesitylene was obtained from an Indian commodities listing.

Nitrogen and Clostridium bacteria are also inputs to the process; however, they are used in the batch start-up. The price of anaerobic grade nitrogen, 80% N_2, 10% H_2 and 10% CO_2, is $6.58/$m^3$ and there is an additional monthly fee of $3.35 for every 9 m^3 to rent cylinders from National Working Party Laboratory Supplies. 575 m^3 are required for each start-up process, which is done every three weeks, so the cost will be $207,871 annually. For the bacteria, it is assumed that the genetically engineered strain will cost four times as much as readily available Clostridia. As such, the bacteria costs $1,416 per unit and will be sourced from ATCC, one vial will be sufficient for start-up each time, however, there needs to be a small excess stock. As such, it can be estimated that 20 should be ordered for 17 start-up periods per year. This is a total annual cost of $28,320 for bacteria.

Raw Materials	Input (kg/yr)	kg Input per kg Butanol	Cost of Input ($/kg)	
Corn	367,097,702	5.547	$	0.16
Lime	438,190	0.007	$	0.02
Ammonia	733,337	0.011	$	0.53
Alpha-Amylase	257,139	0.004	$	1.00
Nutrients	74,203,281	1.121	$	0.10
Water	5,383,018	0.081	$	0.00
Mesitylene	17,267,121	0.261	$	2.80

Table 1. The inputs into the continuous process and the ratio of kg consumed per kg of butanol produced. The bacteria and nitrogen are not included in this table since they are not in the continuous section, however there is an additional annual cost of $236,191 from these inputs.

Mr. Bruce Vrana provided the selling price of butanol in the problem statement, the selling price of DDGS was found from Commonwealth Agri-Energy, LLC., and the selling price of acetone was obtained from a Platt Petrochemical report. These prices are summarized in Table 2 below.

Outputs	kg produced per kg butanol	$ sales per kg butanol	Price/kg
Acetone	0.1166	$ 0.163	$ 1.399
Butanol	1	$ 2.900	$ 2.900
DDGS	2.758	$ 0.372	$ 0.135

Table 2. Price per kg of products, kg of co-products produced per kg of butanol, and profits from co-products per kg of butanol.

ASPEN Plus v8.8 was used to simulate numerous portions of our process including reactors, heat exchange networks, pumps, and the entire ABE separation. The thermodynamic and transport property data for principal chemicals in our process were supplied from ASPEN. Given the non-ideal binary mixtures and azeotropes formed between chemicals, NRTL was used as the chosen property method (Kraemer et al., 2010). Properties for available chemicals that are present in this process are included in Table 3 below.

Parameters	Units	Component ACETONE	Component BUTANOL	Component ETHANOL	Component 1:3:5-01	Component WATER	Component CO2
Std Free Energy	CAL/MOL	-36137.4	-35994.1	-40090.3	28207.7	-54593.5	-94193.7
Std Enthalpy of Formation IG	CAL/MOL	-51519.1	-65706.5	-56116.8	-3797.6	-57757.2	-93988.2
Enthalpy of Vaporization	CAL/MOL	7074.4	10269.5	9359.2	9353.1	9719.5	3910.0
Std Enthalpy of Combustion	CAL/MOL	-396245.3	-586127.8	-294974.7	-1177295.3	0.0	0.0
Enthalpy of Fusion	CAL/MOL	1379.1	2238.5	1177.7	2272.4	1433.5	2154.2
Molecular Weight		58.1	74.1	46.1	120.2	18.0	44.0
Accentric Factor		0.3	0.6	0.6	0.4	0.3	0.2
Critical Pressure	BAR	47.0	44.1	61.4	31.3	220.6	73.8
Entropy 25°C	CAL/MOL-K	122.2	186.0	120.9	0.0	0.0	50.4
Specific Gravity 15°C		0.8	0.8	0.8	0.9	1.0	0.3
Normal Boiling Point	C	56.3	118.8	78.3	164.7	100.0	-78.5
Critical Temperature	C	235.1	290.0	240.9	364.2	373.9	31.1
Critical Volume	CC/MOL	209.0	273.0	168.0	433.0	55.9	94.0
Std Volume 15°C	CC/MOL	74.0	91.3	58.2	138.5	18.1	53.6

Parameters	Units	Component ACETI-01	Component NITROGEN	Component OXYGEN	Component N-BUT-01	Component HYDROGEN
Std Free Energy	CAL/MOL	-89471.7	0.0	0.0	-85984.5	0.0
Std Enthalpy of Formation IG	CAL/MOL	-103372.5	0.0	0.0	-113642.9	0.0
Enthalpy of Vaporization	CAL/MOL	5584.0	1330.0	1620.6	8490.9	214.1
Std Enthalpy of Combustion	CAL/MOL	-194563.9	0.0	0.0	-479602.6	-57757.7
Enthalpy of Fusion	CAL/MOL	2801.7	172.0	106.0	2768.2	28.0
Molecular Weight		60.1	28.0	32.0	88.1	2.0
Accentric Factor		0.5	0.0	0.0	0.7	-0.2
Critical Pressure	BAR	57.9	34.0	50.4	40.6	13.1
Entropy 25°C	CAL/MOL-K	114.2	45.8	49.0	179.3	31.2
Specific Gravity 15°C		1.1	0.3	0.3	1.0	0.3
Normal Boiling Point	C	117.9	-195.8	-183.0	163.3	-252.8
Critical Temperature	C	318.8	-147.0	-118.6	342.6	-240.0
Critical Volume	CC/MOL	177.0	89.2	73.4	293.0	64.1
Std Volume 15°C	CC/MOL	57.6	53.6	53.6	91.6	53.6

Table 3. Properties of process chemicals used in simulated processes taken from ASPEN.

In modeling the process in ASPEN, RADFRAC was used for columns, HEATX was used for heat exchangers, the liquid-liquid extractions were modeled using EXTRACT, a FLASH2 was used to model the dissolved gases after fermentation and RSTOIC was used to model the combustion in the thermal oxidizer. To account for the difficult separation process and numerous azeotropes in the system, binary interactions were accounted for as input parameters for the ABE separation at the recommendation of Mr. Tieri.

Process Flow Diagrams, Process Descriptions, and Unit Descriptions

This section of the report presents the proposed process flow diagram for the corn-to-butanol process. The overall process flow diagram is shown in Figure 1, with an accompanying description. Following, the process is divided into its five main sections: corn processing, liquefaction, fermentation, ABE separation, and DDGS separation, each with detailed process flow diagrams, process descriptions, and tables presenting material flow rates and other pertinent data. Material balance calculations for unchanged sections of the plant were performed by scaling the material balance of the original ethanol plant. Calculations more specific to this process, such as fermentation and separation calculations, are presented in Appendix A.

Due to the retrofitting of an existing 40MM gpy corn to ethanol plant, all equipment, unless specified, was purchased in 2007 at the prices listed in the following descriptions. Furthermore, all vessels in the original plant were designed to the American Society of Mechanical Engineer's (ASME) Standards. Red headers for unit descriptions indicate that the unit is not currently present in the existing ethanol plant and will need to be purchased as a capital investment.

Additionally, upon examination of the material balance, exclusively pertaining to water, the balance does not close exactly due to iterative recycle calculations. A further discussion on this issue is located in the Other Important Considerations: Water Management section of the report.

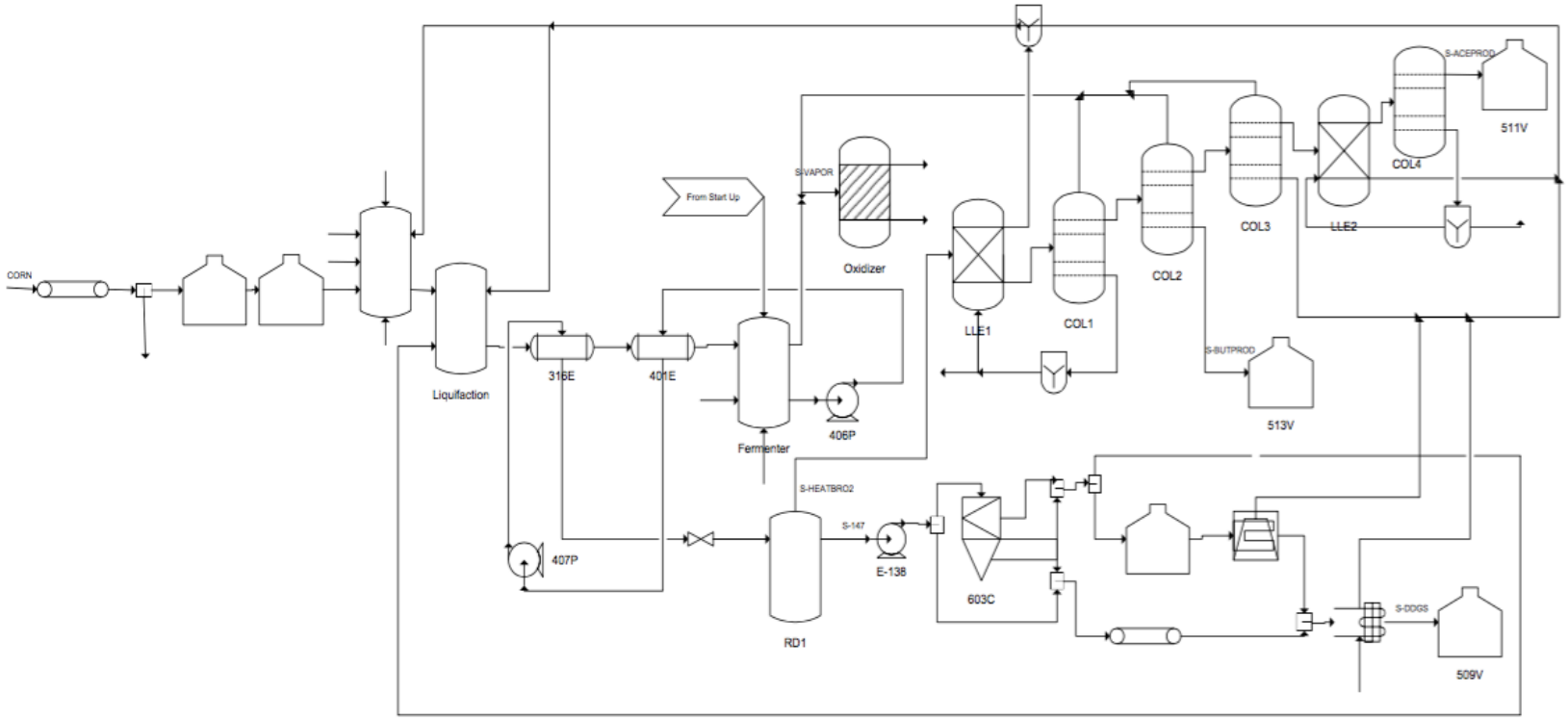

Figure 1. Process flow diagram of the overall biobutanol production process. This diagram shows the major pieces of equipment and large recycle streams that flow through different sections in the process. More detailed flow diagrams of each process section are presented later in the report.

Overall Process Description

The proposed process for the synthesis of biobutanol is divided into five main sections, presented by the flow chart in Figure 2. The process begins with corn processing, or the traditional grinding, mashing and milling of corn, followed by liquefaction where alpha-amylase is added to break down the starch in the corn and form a corn slurry. This slurry then undergoes several heat exchanges and is fed into the fermentation vessels continuously.

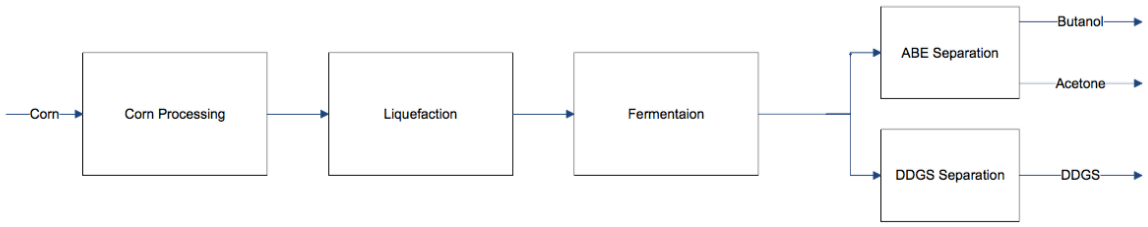

Figure 2. Flow chart of biobutanol production. This chart shows the five main sections of the overall process, the input, corn, and the major products.

The continuous fermentation is accomplished by using a bioengineered strain of Clostridia that produces ABE products in a ratio of 12:58:1 by weight. The dilution rate of the fermenters is 0.031 hr^{-1} and the fermentation is carried out anaerobically. To accomplish this fermentation, the tanks are sparged with N_2 at start-up and then CO_2 and H_2 are allowed to accumulate in the tank. P2 nutrients are continuously fed into the reactor so that the bacteria continue to grow and duplicate. Studies have shown that this process is sustainable for approximately three weeks (Ezeji et al., 2004), so there will be alternate fermenters that will be run after three weeks while the others are cleaned. Furthermore, start-up requires cultivation of the bacteria starting at a laboratory scale and takes approximately 8 days to complete, so it will be started 8 days prior to the switch between fermenters. A Gantt chart of this process is included below for reference.

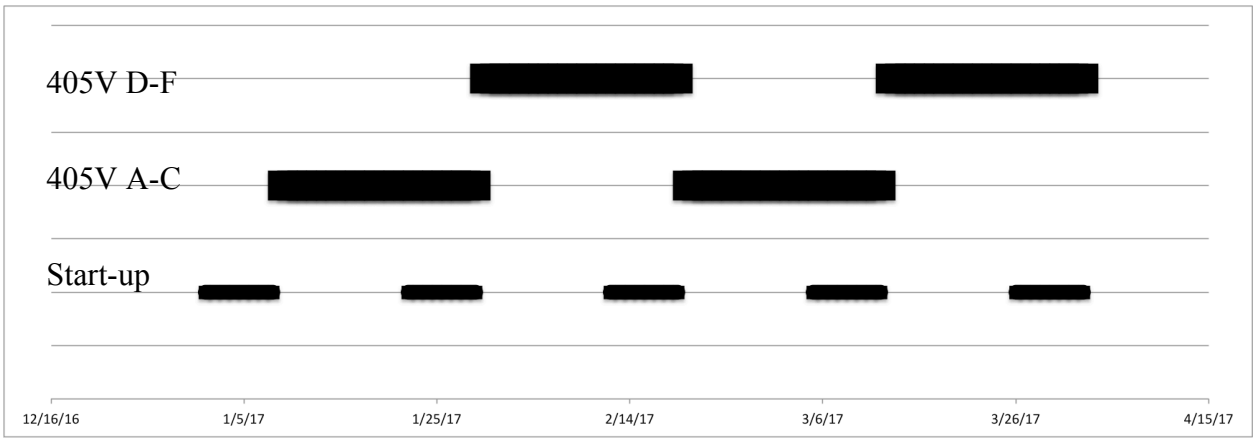

Figure 3. Gantt Chart for proposed timeline of fermentation. Start-up is lumped into an 8-day period, however, it should be noted that each vessel requires 21 hours and the remaining 3 hours are included for transfer between vessels.

The reaction product from the fermentation exits in two streams. The vapor exists the fermenter and is sent to a thermal oxidizer for heat recovery. The liquid is passed through a rotary drum filter to remove the solids and then continues to LLE1, the liquid-liquid extraction column. Mesitylene is used as a solvent to remove the organic products from the water phase. The solvent extract stream from LLE1 then proceeds to COL1, a distillation column that separates the ABE products so that the solvent can be recovered. The solvent is recycled to LLE1 and the ABE products continue in a series of distillation columns; the first of which, COL2, separates butanol, as its bottoms. COL3 separates out the acetone from the ethanol, and the acetone water stream then undergoes liquid-liquid extraction using mesitylene in LLE2 to increase the purity of the acetone. COL4 separates the recovered acetone from the solvent.

Following filtration, the solids undergo a traditional corn ethanol DDGS process, which existed in the ethanol plant. It is assumed that there are only trace amounts of organic products in the solids based on the low mass fractions of organics in the exit stream. It is also assumed that the equipment electric grade is designed to withstand this condition as suggested by Mr. Bockrath. The solids are pumped to a centrifuge where the liquid is separated from the solids.

The solids are then moved to an evaporator and ultimately dried to produce the final DDGS product.

Corn Processing: Process Description

The first section of this process is corn processing. The process flow diagram and accompanying material balance for this section are presented in Figures 4 and 5, respectively. In this section, the corn that is dirty and contains unwanted parts of the corn plant (such as husks, cobs, roots, and other highly fibrous material) is treated and handled to prepare it for liquefaction. Both upstream corn processing and liquefaction are standard practices in processes involving corn fermentation, therefore this section of the process does not contain any retrofits or modifications to the original plant. The corn that is fed to the liquefaction process in an ethanol plant is treated in the same way that the corn fed to liquefaction should be in this butanol plant. 14.5MM bushels of corn per year, or 356MM kg per year are delivered to this plant where they are dumped into STORE-1, 102V, a corn storage silo where the corn is stored before it is fed into the plant to begin processing. The tank has a volume of 18,540 m^3, but 90% of this volume is working volume. It is 59.67 m tall and 19.89 m in diameter and is maintained at 26.7°C and 1.11 bar. From the silo, the corn is fed onto 101MH, CONVEY-1, a belt conveyor that loads 19 MT per hour per cm of corn. The conveyor is 100 m in length and 2.44 cm in width. This width enables the corn to be conveyed one-by-one so that it is easily cleaned and husked properly. It transports the corn to SPLIT-1, 103MH, where the corn is cleaned and unwanted parts of the corn are separated from the kernels and discarded. The splitter handles 46,351 kg of corn per

hour. The non-useful parts of the corn plant are sent to the trash and the cleaned kernels are sent further along in the process to milling.

The corn is then fed to GRIND-1, 104M, a hammer mill that crushes and grinds the kernels into a powder. The hammer mill in this plant mills 46,212 kg of corn per hour. After milling, the milled corn is stored in STORE-2, 105V. This surge tank is 9.59 m in height and 3.19 m in diameter. It has a total volume of 142 m^3, but a working volume of 76.90 m^3. The contents of the surge tanks are delivered to a hopper, SOLIDS-HANDLE-1, 106W, for batch weighing. The hopper is 150 m^3 and is filled to 100 m^3, its working volume. After weighing, the corn is stored in STORE-3, 107V, a continuous weigh tank, until it is fed to the liquefaction section of the plant. The tank is 9.59 m in height and 3.20 m in diameter. Its volume is 141.58 m^3 but the corn fills 76.90 m^3, the working volume of the tank.

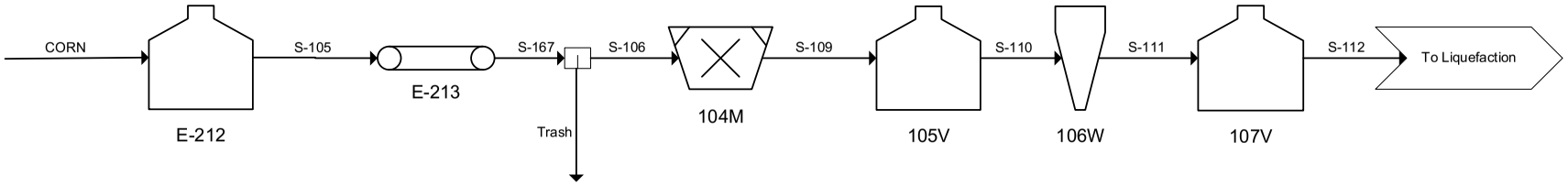

Figure 4. Process flow diagram of the corn processing section. This section does not contain any modifications to the original plant. Its purpose is to store, transport, and clean the incoming corn to prepare it for liquefaction.

Stream ID	Molc. Weight (g/gmol)	**CORN**	**S-105**	**S-167**	**S-106**	**TRASH**	**S-109**	**S-110**	**S-111**	**S-112**
Temperature (C)		26.70	26.70	26.70	26.70	26.70	26.70	26.70	26.70	26.70
Pressure (bar)		1.01	1.01	1.01	1.01	1.01	1.01	1.01	1.01	1.01
Total Mass Flow (kg/h)		46350.72	46350.72	46350.72	46211.67	139.05	46211.67	46211.67	46211.67	46211.67
Total Mole Flow (kmol/h)		702.39	702.39	702.39	700.28	2.11	700.28	700.28	700.28	700.28
Component Flow (kg/h)										
Non-starch Poly	162.02	3230.64	3230.64	3230.64	3220.95	9.69	3220.95	3220.95	3220.95	3220.95
Oil	18.02	1575.92	1575.92	1575.92	1571.20	4.73	1571.20	1571.20	1571.20	1571.20
Other Solids	180.16	3151.85	3151.85	3151.85	3142.39	9.46	3142.39	3142.39	3142.39	3142.39
Protein - insoluble	180.16	2285.09	2285.09	2285.09	2278.24	6.86	2278.24	2278.24	2278.24	2278.24
Protein - soluble	180.16	1575.92	1575.92	1575.92	1571.20	4.73	1571.20	1571.20	1571.20	1571.20
Starch	162.00	27578.68	27578.68	27578.68	27495.95	82.74	27495.95	27495.95	27495.95	27495.95
Water	18.02	6952.61	6952.61	6952.61	6931.75	20.86	6931.75	6931.75	6931.75	6931.75
Carbon dioxide (CO2)	44.01	0.00	0.00	0.00	0.00	0.00	0.00	0.00	0.00	0.00
Ethanol	46.07	0.00	0.00	0.00	0.00	0.00	0.00	0.00	0.00	0.00
Acetone	58.08	0.00	0.00	0.00	0.00	0.00	0.00	0.00	0.00	0.00
Butanol	74.12	0.00	0.00	0.00	0.00	0.00	0.00	0.00	0.00	0.00
Nitrogen	28.02	0.00	0.00	0.00	0.00	0.00	0.00	0.00	0.00	0.00
Glucose	180.16	0.00	0.00	0.00	0.00	0.00	0.00	0.00	0.00	0.00
Clostridia bacteria	n/a	0.00	0.00	0.00	0.00	0.00	0.00	0.00	0.00	0.00
Nutrients	n/a	0.00	0.00	0.00	0.00	0.00	0.00	0.00	0.00	0.00
Acetic Acid	60.05	0.00	0.00	0.00	0.00	0.00	0.00	0.00	0.00	0.00
Butyric Acid	88.11	0.00	0.00	0.00	0.00	0.00	0.00	0.00	0.00	0.00
Oxygen	32.00	0.00	0.00	0.00	0.00	0.00	0.00	0.00	0.00	0.00
Hydrogen	2.00	0.00	0.00	0.00	0.00	0.00	0.00	0.00	0.00	0.00
Mesitylene	120.19	0.00	0.00	0.00	0.00	0.00	0.00	0.00	0.00	0.00

Figure 5. Material balance containing all the streams in the corn processing section of the process.

Corn Processing: Equipment Descriptions

Corn Storage Silo, STORE-1, 102V

This unit is 18,540 m^3 with a diameter of 19.89 m and a height of 59.67 m and is made of carbon steel. It is designed to withstand a pressure of 1.11 bar and to operate at a temperature of 26.7°C. It has a working volume of 90% and is used to store corn before it is fed to the belt conveyor. It was originally purchased for $979,000.

Grain Handling, CONVEY-1, 101MH

This belt conveyor is 100 m long and 2.44 cm wide and handles 356 million kg of corn per year or 46,351 kg per hour at a loading rate of 19 MT per hour per cm. It is made of carbon steel and was originally purchased for $120,800. It uses 768,240 kWh/year of electricity.

Cleaning, SPLIT-1, 103MH

This unit is a flow splitter with a throughput of 46,351 kg of corn per hour. It is used to remove the husk the corn and sends the husk to trash, which is composted and the corn to milling. The split fraction is 0.997 to the top stream. Its original purchase cost was $61,000. It uses 220,259 kWh/year of electricity.

Hammer Mill, GRIND-1, 104M

This unit is a grinder to refine the corn into a powder. It has a capacity of 46,212 kg per hour of corn and is constructed of carbon steel. It was originally purchased for $98,000. It uses 2,482,544 kWh/year of electricity.

Surge Tank, STORE-2, 105V

This tank is constructed of carbon steel, has a height of 9.59 m, a diameter of 3.19 m, a working volume of 76.90 m^3 and a maximum volume of 142 m^3. It is used to hold the milled corn prior to weighing and was built for a design pressure of 1.52 bar and a working volume to vessel volume ratio of 90%. It was originally purchased for $33,000.

Batch Weighing, SOLIDS-HANDLE-1, 106W

This unit is a hopper that weighs the milled corn after it exits the surge tank. It has a working volume of 100.93 m^3 and a vessel volume of 150 m^3. It is made of carbon steel, is kept at ambient temperature, 26.7°C, and was originally purchased for $51,000.

Continuous Weigh Tank, STORE-3, 107V

This unit is used to receive the corn that has passed through the batch weighing process. It has a working volume of 76.90 m^3, a maximum volume of 141.58 m^3, a diameter of 3.20 m, a height of 9.59 m and is made of carbon steel. It was built to withstand a design pressure of 1.52 bar, and was originally purchased for $44,000.

Liquefaction: Process Description

Following upstream corn processing, the milled corn goes through the liquefaction section of the process. The detailed process flow diagram and material balance of this section are presented in Figures 6 and 7, respectively. The liquefaction section converts the dry corn into a

slurry using different chemicals, heating, cooling, and mixing. This enables a better fermentation of the corn. The milled corn in the blending tank, STORE-3, 107V, is sent to STORE-5, 307V, another blending tank. Alpha-amylase is stored in STORE-3, 301V, a storage tank maintained at 25°C with a height of 4.88 m and diameter of 1.73 m. Alpha-amylase exits the tank and is pumped by PUMP-1, 302P, a pump that uses a power of 0.20 kW and has a 50% pumping efficiency, into 307V at 4.45 bar.

Alpha-amylase is an enzyme that cleaves starch molecules from the corn at different points. This breaks the starch molecules into smaller water-soluble fragments called "dextrins" that are water soluble (Warner, 2008). Ammonia is stored in a tank STORE-4, 303V, maintained at 25°C that has a height of 3.09 m and a diameter of 1.90 m. It is pumped through PUMP-2, 304P, that uses a power of 0.19 kW and has a 70% pumping efficiency. The ammonia stream enters the slurry tank, 307V at 1.01 bar. Lime is stored in SOLIDS-HANDLE-2, 305V, a hopper with 75% working to vessel volume ratio and a volume of 4.02 m^3, before being fed to the slurry tank. The ammonia and lime are added to maintain the slurry at a pH of 6.5 (Warner, 2008). CIP water, used to clean the slurry tank, is also continuously pumped into the tank at a pressure of 3.29 bar by PUMP-3, 306P. This pump uses a power of 3.73 kW and has a 70% pumping efficiency. The corn, alpha-amylase, ammonia, lime, and CIP all continuously enter the slurry mix tank, STORE-5, 307V. This tank mixes the contents to form the corn slurry. The tank has a height of 3.04 m, a diameter of 2.53 m, and a total volume of 15.3 m^3. The working volume is 65% of the total vessel volume. The slurry exits the tank as S-115 at 100°C and 1.01 bar. PUMP-4, 308P is a centrifugal pump that pumps the slurry stream through a heat exchanger. After PUMP-4, 308P, the slurry stream has a temperature of 100°C and a pressure of 4.18 bar. The pump uses a 3.55 kW of power with a 70% pumping efficiency. The slurry then passes through a

heat exchanger, HX-101, which cools the slurry to 87°C. This heat exchanger has a heat transfer area of 60.98 m^2 and an average heat transfer coefficient of 0.02 cal/s-cm^2-K. The cooled slurry is then fed to a blending tank, STORE-6, 310V. In this tank, the slurry is cooked and mixed. The tank has a height of 11.75 m, a diameter of 3.92 m, and a volume of 141.43 m^3, of which 90% of this volume is working volume. The liquefaction product leaves the tank at 89°C and 1.01 bar. The slurry again is pumped by PUMP-5, 311P, through a heat exchanger. This centrifugal pump has a power of 50 kW and 70% pumping efficiency. The temperature and pressure changes in liquefaction are as specified by the original ethanol plant process description. The slurry exits as S-138 at a temperature of 89°C and a pressure of 4.18 bar. The heat exchanger, 312E, that heats the slurry is a countercurrent shell and tube heat exchanger. S-138 is heated from 89°C to 101°C. This stream is then heated by HEAT-1, 313E, to 110°C. The slurry enters a receiver tank, STORE-7, 314V to settle. The tank has a volume of 14.2 m^3 and maintains the slurry at 110°C and 2.00 bar. After a residence time of 0.25 hours, the slurry exits the tank back to the heat exchanger 312E, now running counter-currently with cooler slurry. The heated slurry drops in temperature to 97.8°C. The slurry passes through one more countercurrent heat exchanger, 316E, and is cooled further to 59.5°C prior to fermentation.

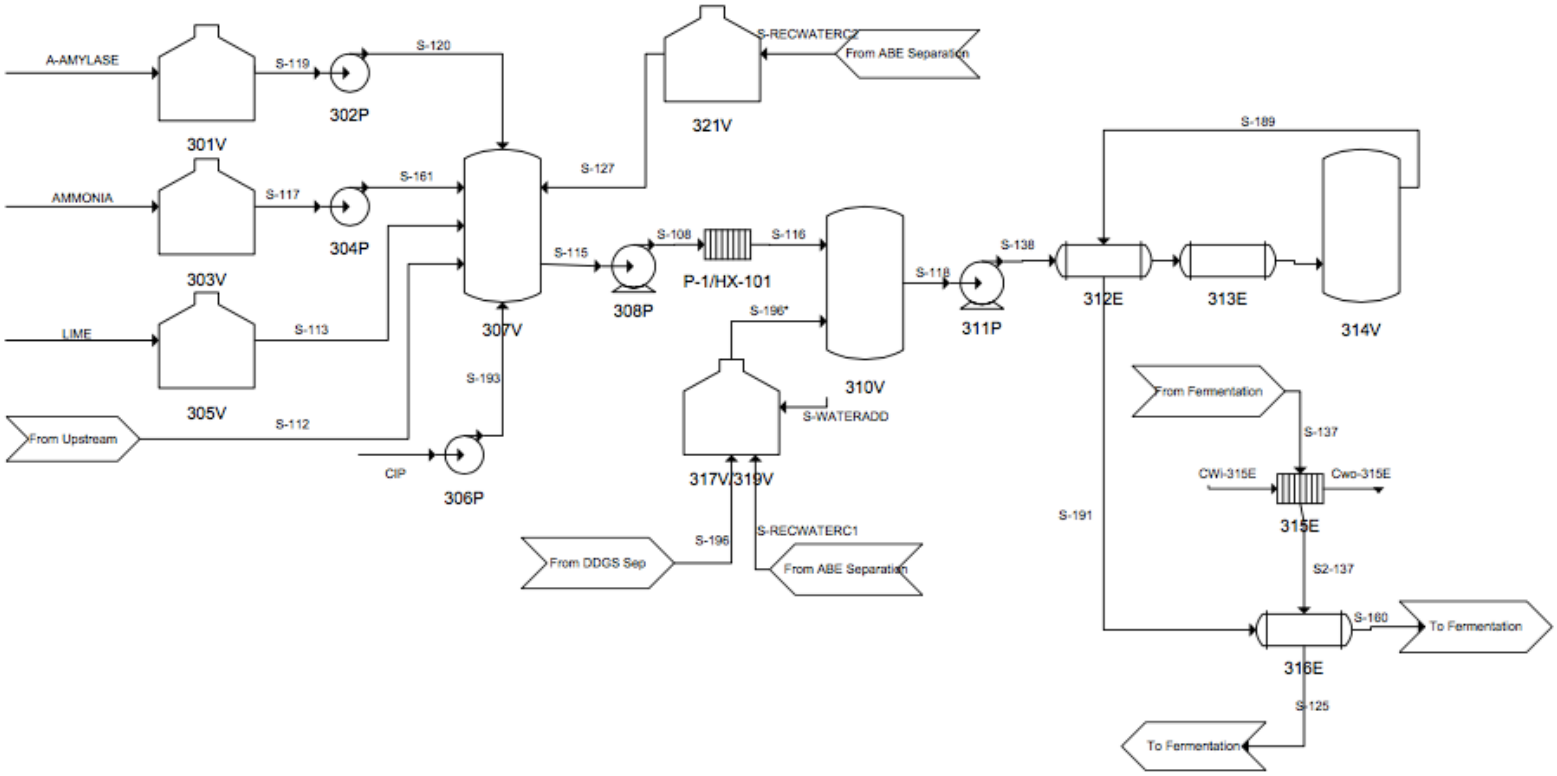

Figure 6. Process flow diagram of the liquefaction section. This section contains slight modifications to the original plant involving recycle streams from the separation sections. Its purpose is to make the corn into slurry, which enables a better fermentation, the section immediately following.

Stream ID	Molc. Weight (g/gmol)	LIME	S-113	AMMONIA	S-117	S-161	A-AMYLASE	S-119	S-120	CIP	S-193	S-127	S-115	S-108	S-116	S-196
Temperature (C)		25.00	25.00	25.00	25.00	25.13	25.00	25.00	25.08	82.20	82.22	100.04	100.20	100.31	87.00	93.65
Pressure (bar)		1.01	1.01	1.01	1.01	7.91	1.01	1.01	4.46	1.01	3.29	4.46	1.01	4.18	4.18	4.45
Total Mass Flow (kg/h)		55.33	55.33	92.59	92.59	92.59	32.47	32.47	32.47	2326.23	2326.23	78709.61	127427.91	127427.91	127427.91	7431.13
Total Mole Flow (kmol/h)		0.31	0.31	0.51	0.51	0.51	1.80	1.80	1.80	123.28	123.28	4367.90	5194.09	5194.09	5194.09	322.03
Component Flow (kg/h)																
Non-starch Poly	162.02	0.00	0.00	0.00	0.00	0.00	0.00	0.00	0.00	0.00	0.00	0.00	3220.95	3220.95	3220.95	70.54
Oil	18.02	0.00	0.00	0.00	0.00	0.00	0.00	0.00	0.00	0.00	0.00	0.00	1571.20	1571.20	1571.20	152.87
Other Solids	180.16	55.33	55.33	92.59	92.59	92.59	0.00	0.00	0.00	116.31	116.31	0.00	3406.63	3406.63	3406.63	1118.75
Protein - insoluble	180.16	0.00	0.00	0.00	0.00	0.00	0.00	0.00	0.00	0.00	0.00	0.00	2278.24	2278.24	2278.24	49.90
Protein - soluble	180.16	0.00	0.00	0.00	0.00	0.00	0.00	0.00	0.00	0.00	0.00	0.00	1571.20	1571.20	1571.20	568.47
Starch	162.00	0.00	0.00	0.00	0.00	0.00	0.00	0.00	0.00	0.00	0.00	0.00	27495.95	27495.95	27495.95	0.00
Water	18.02	0.00	0.00	0.00	0.00	0.00	32.47	32.47	32.47	2209.92	2209.92	78709.61	87883.75	87883.75	87883.75	5467.89
Carbon dioxide (CO2)	44.01	0.00	0.00	0.00	0.00	0.00	0.00	0.00	0.00	0.00	0.00	0.00	0.00	0.00	0.00	0.00
Ethanol	46.07	0.00	0.00	0.00	0.00	0.00	0.00	0.00	0.00	0.00	0.00	0.00	0.00	0.00	0.00	0.04
Acetone	58.08	0.00	0.00	0.00	0.00	0.00	0.00	0.00	0.00	0.00	0.00	0.00	0.00	0.00	0.00	0.40
Butanol	74.12	0.00	0.00	0.00	0.00	0.00	0.00	0.00	0.00	0.00	0.00	0.00	0.00	0.00	0.00	2.26
Nitrogen	28.02	0.00	0.00	0.00	0.00	0.00	0.00	0.00	0.00	0.00	0.00	0.00	0.00	0.00	0.00	0.00
Glucose	180.16	0.00	0.00	0.00	0.00	0.00	0.00	0.00	0.00	0.00	0.00	0.00	0.00	0.00	0.00	0.00
Clostridia bacteria	n/a	0.00	0.00	0.00	0.00	0.00	0.00	0.00	0.00	0.00	0.00	0.00	0.00	0.00	0.00	0.00
Nutrients	n/a	0.00	0.00	0.00	0.00	0.00	0.00	0.00	0.00	0.00	0.00	0.00	0.00	0.00	0.00	0.00
Acetic Acid	60.05	0.00	0.00	0.00	0.00	0.00	0.00	0.00	0.00	0.00	0.00	0.00	0.00	0.00	0.00	0.00
Butyric Acid	88.11	0.00	0.00	0.00	0.00	0.00	0.00	0.00	0.00	0.00	0.00	0.00	0.00	0.00	0.00	0.00
Oxygen	32.00	0.00	0.00	0.00	0.00	0.00	0.00	0.00	0.00	0.00	0.00	0.00	0.00	0.00	0.00	0.00
Hydrogen	2.00	0.00	0.00	0.00	0.00	0.00	0.00	0.00	0.00	0.00	0.00	0.00	0.00	0.00	0.00	0.00
Mesitylene	120.19	0.00	0.00	0.00	0.00	0.00	0.00	0.00	0.00	0.00	0.00	0.00	0.00	0.00	0.00	0.00

Stream ID	Molc. Weight (g/gmol)	S-RECWATERC1	S-WATERADD	S-118	S-138	S-123	S-189	S-191	S-137	S2-137	CWi-315E	CWo-315E	S-160
Temperature (C)		41.80	25.00	88.77	88.81	101.20	110.00	97.80	53.29	34.00	12.80	30.15	59.52
Pressure (bar)		1.00	1.00	1.01	4.18	4.18	2.00	2.00	6.18	6.18	1.00	1.00	2.00
Total Mass Flow (kg/h)		11887.00	3090.00	149836.03	149836.03	149836.03	149836.03	149836.03	143152.95	143152.95	150000.00	150000.00	149836.03
Total Mole Flow (kmol/h)		659.66	171.48	6347.25	6347.25	6347.25	6347.25	6347.25	6256.75	6256.75	8324.08	8324.08	6347.25
Component Flow (kg/h)													
Non-starch Poly	162.02	0.00	0.00	3291.50	3291.50	3291.50	3291.50	3291.50	3291.50	3291.50	0.00	0.00	3291.50
Oil	18.02	0.00	0.00	1724.07	1724.07	1724.07	1724.07	1724.07	1724.07	1724.07	0.00	0.00	1724.07
Other Solids	180.16	0.00	0.00	4525.38	4525.38	4525.38	4525.38	4525.38	5040.75	5040.75	0.00	0.00	4525.38
Protein - insoluble	180.16	0.00	0.00	2328.13	2328.13	2328.13	2328.13	2328.13	2328.13	2328.13	0.00	0.00	2328.13
Protein - soluble	180.16	0.00	0.00	2139.66	2139.66	2139.66	2139.66	2139.66	2561.33	2561.33	0.00	0.00	2139.66
Starch	162.00	0.00	0.00	27495.95	27495.95	27495.95	27495.95	27495.95	0.00	0.00	0.00	0.00	27495.95
Water	18.02	11887.00	3090.00	108328.65	108328.65	108328.65	108328.65	108328.65	106421.97	106421.97	150000.00	150000.00	108328.65
Carbon dioxide (CO2)	44.01	0.00	0.00	0.00	0.00	0.00	0.00	0.00	939.16	939.16	0.00	0.00	0.00
Ethanol	46.07	0.00	0.00	0.04	0.04	0.04	0.04	0.04	152.02	152.02	0.00	0.00	0.04
Acetone	58.08	0.00	0.00	0.40	0.40	0.40	0.40	0.40	1603.96	1603.96	0.00	0.00	0.40
Butanol	74.12	0.00	0.00	2.26	2.26	2.26	2.26	2.26	9039.25	9039.25	0.00	0.00	2.26
Nitrogen	28.02	0.00	0.00	0.00	0.00	0.00	0.00	0.00	0.00	0.00	0.00	0.00	0.00
Glucose	180.16	0.00	0.00	0.00	0.00	0.00	0.00	0.00	0.00	0.00	0.00	0.00	0.00
Clostridia bacteria	n/a	0.00	0.00	0.00	0.00	0.00	0.00	0.00	321.95	321.95	0.00	0.00	0.00
Nutrients	n/a	0.00	0.00	0.00	0.00	0.00	0.00	0.00	9369.69	9369.69	0.00	0.00	0.00
Acetic Acid	60.05	0.00	0.00	0.00	0.00	0.00	0.00	0.00	104.25	104.25	0.00	0.00	0.00
Butyric Acid	88.11	0.00	0.00	0.00	0.00	0.00	0.00	0.00	252.81	252.81	0.00	0.00	0.00
Oxygen	32.00	0.00	0.00	0.00	0.00	0.00	0.00	0.00	0.00	0.00	0.00	0.00	0.00
Hydrogen	2.00	0.00	0.00	0.00	0.00	0.00	0.00	0.00	2.11	2.11	0.00	0.00	0.00
Mesitylene	120.19	0.00	0.00	0.00	0.00	0.00	0.00	0.00	0.00	0.00	0.00	0.00	0.00

Figure 7. Material balance containing all the streams in the liquefaction section of the process.

Liquefaction: Equipment Descriptions

Alpha-Amylase Tank, STORE-3, 301V

This unit is used to store alpha-amylase before it is fed to the liquefaction portion of the process. It is designed to operate at a temperature of 25°C, has a design pressure of 1.52 bar, a diameter of 1.73 m, a height of 5.19 m and a volume of 12.19 m^3. It is constructed of 304-grade stainless steel and was originally purchased for $50,000.

Alpha-Amylase Pump, PUMP-1, 302P

This unit is used to pump the contents of the alpha-amylase storage tank into the liquefaction vessel. It operates continuously and uses a power of 0.20 kW. S-119 flows into the pump at a pressure of 1.01 bar and leaves the pump as S-120 with a pressure of 4.46 bar. The pump is a gear pump with a 50% pumping efficiency and a pressure head of 3.45 bar. It is made out of 316-grade stainless steel and was originally purchased for $4,000. This pump uses 1,584 kWh/year of electricity.

Ammonia Tank, STORE-4, 303V

This unit is used to store ammonia before it is fed to the liquefaction portion of the process. It is designed to operate at a temperature of 25°C, has a design pressure of 1.52 bar, a diameter of 1.90 m, a height of 3.09 m and a volume of 8.77 m^3. It is constructed of carbon steel and was originally purchased for $28,000.

Ammonia Pump, PUMP-2, 304P

This unit is used to pump the contents of the ammonia storage tank into the liquefaction vessel. It operates continuously and uses a power of 0.186 kW. S-117 flows into the pump at a pressure of 1.01 bar and leaves the pump as S-161 with a pressure of 7.91 bar. The pump is a gear pump with a pumping efficiency of 70% and a pressure head of 6.89 bar. It is made out of 316-grade stainless steel and was originally purchased for $4,000. It uses 1,476 kWh/year of electricity.

Lime Tank, SOLIDS-HANDLE-2, 305V

This unit is a hopper used to store lime before it is fed to the liquefaction portion of the process. It can operate at a 75% working to vessel volume ratio and has a volume of 4.02 m^3. It is constructed of carbon steel and was originally purchased for $9,000.

CIP Pump, PUMP-3, 306P

This unit is used to pump and clean the slurry tank. It operates continuously and uses a power of 3.73 kW. CIP flows into the pump at a pressure of 1.01 bar and leaves the pump as S-193 with a pressure of 3.29 bar. The pump is a gear pump with a pumping efficiency of 70% and a pressure head of 2.28 bar. It is made out of 316-grade stainless steel and was originally purchased for $4,000. It uses 29,530 kWh/year of electricity.

Slurry Mix Tank, STORE-5, 307V

This unit is a blending tank used to mix the lime, ammonia, alpha-amylase and corn. The chemicals and enzymes mix and form a slurry with the corn. The tank is made of 304-grade stainless steel, has a diameter of 2.53 m, a height of 3.04 m, a volume of 15.28 m^3 and a design pressure of 4.00 bar. The tank has a working volume to vessel volume ratio of 65%, a final

pressure of 1.01 bar and a final temperature of 100.2°C. This vessel was originally purchased for $69,000. It uses 91,315 kWh/year of electricity.

Slurry Pump, PUMP-4, 308P

This pump is used to pump the corn slurry from the slurry tank, through a heat exchanger and to the liquefaction vessel. S-115 enters the pump at 100°C and 1.01 bar and exits the pump as S-108 at the same temperature and 4.18 bar. The pump is a centrifugal pump with a pumping efficiency of 70% and a pressure head of 3.17 bar. It has a power of 3.55 kW, is made of 316-grade stainless steel and was originally purchased for $25,300. It uses 28,116 kWh/year of electricity.

Heat Exchanger, HX-101

This heat exchanger uses cooling water to cool the slurry exiting the mixing tank from 100°C to 87°C before it enters the tank for liquefaction. This heat exchanger is made of carbon steel with a heat transfer area of 98.85 m^2. The heat duty calculated in ASPEN is 507,031 cal/s and the required area without fouling is 60.984 m^2. The average heat transfer coefficient, is equal to 0.02 cal/s-cm^2-K and the LMTD is 40.95°C. The cost per unit was $23,000. The flow rate of cooling water needed was found using a design specification in ASPEN for an approach of 12°C as specified by the existing plant. Associated block and stream reports can be found in Appendix B.

Liquefaction, STORE-6, 310V

This unit is a blending tank used for liquefaction to cook the corn gluten slurry. The tank has a diameter of 3.92 m, a height of 11.75 m, a volume of 141.43 m^3, a design pressure of 3.00 bar

and is made of 304-grade stainless steel. The tanks working to vessel volume ratio is 90% and the final temperature and pressure of the tank is 88.77°C and 1.01 bar, respectively. The vessel was originally purchased for $161,000. It uses 604,866 kWh/year of electricity.

Liquefaction Pump, PUMP-5, 311P

This pump is used to pump the viscous corn slurry from liquefaction, through a heat exchanger and ultimately to a settling tank. S-118 enters the pump at 88.77°C and 1.01 bar and exits the pump as S-138 at 88.81°C and 4.18 bar. The pump is a centrifugal pump with a pumping efficiency of 70% and a pressure head of 3.17 psi. It has a power of 50 kW, is made of 316-grade stainless steel and was originally purchased for $15,100. It uses 396,000 kWh/year of electricity.

Heat Exchanger, 312E

This shell and tube heat exchanger uses countercurrent heat transfer between process streams to cool S-189 from 110°C and 2 bar to 97.80°C and 2 bar. This is accomplished by concurrently heating stream S-138 from 88.81°C and 4.18 bar to 101.01°C and 4.18 bar in S-123. This heat exchange is run with streams that all contain the same contents and is a part of a heat exchange loop with 313E. There is one heat exchanger, made of 304-grade stainless steel with a heat transfer area of 332.90 m^2. This exchanger cost $201,000 to purchase. The heat duty calculated in ASPEN is 556,624 cal/s and the required area without fouling is 308.39 m^2. The average heat transfer coefficient, is equal to 0.0203 cal/s-cm^2-K and the LMTD is 8.89°C.

Heat Exchanger, HEAT-1, 313E

This heat exchanger is a heater that uses medium pressure steam at 8.62 bar and 177°C to heat S-123 from 101.01°C and 4.18 bar to S-130 at 110°C and 4.18 bar. The steam stream has a final temperature of 153°C. This unit is made of 304-grade stainless steel, has a heat transfer area of 36.67 m^2, an overall efficiency of 85% and cost $14,000 to purchase.

Cook Retention Tank, STORE-7, 314V

This unit is a receiver tank with a residence time of 15 minutes used to allow for settling of the corn slurry following liquefaction. The tank has a diameter of 2.44 m, a height of 30.4 m, a volume of 14.16 m^3, a design pressure of 10.00 bar, is made of 304-grade stainless steel and was originally purchased for $174,000. The tank's final temperature is 110°C and final pressure is 2 bar.

Heat Exchanger, COOL-1, 315E

This shell and tube heat exchanger uses countercurrent heat transfer to cool S-137 from 53.29°C and 6.18 bar to S2-137 at 34.0°C and 6.18 bar. This is done using 150,000 kg/hr of chilled cooling water that rises from 12.8°C and 1 bar in CWi-315E to 30.15°C and 1 bar in CWo-315E. The total heat transfer area needed found using ASPEN is 157.72 m^2. This unit has a heat transfer area of 179.12m^2, is made of carbon steel and was originally purchased for $51,000. The heat duty of this exchanger is 709,357 cal/s, the average heat transfer coefficient is 0.02 cal/s-cm^2-K and the LMTD is 22.2°C.

Heat Exchanger, 316E

This shell and tube heat exchanger uses countercurrent heat transfer between process streams to cool S-153 from 97.80°C and 2 bar to S-160 at 59.5°C and 2.00 bar. This is accomplished by concurrently heating stream S-137 from 34.0°C and 6.18 bar to 78.8°C and 6.18 bar in S-125. The total heat transfer area needed found using ASPEN is 372.87 m^2. This unit has a heat transfer area of 405.68 m^2, is made of 314-grade stainless steel and was originally purchased for $614,000. The heat duty of this exchanger is 1,674,195 cal/s, the average heat transfer coefficient is 0.02 cal/s-cm^2-K and the LMTD is 22.12°C.

Pump to Fermentation, PUMP-6, 322P

This pump is needed to pump the cooked corn slurry from liquefaction to the fermentation process. S-160 enters the pump at 59.5°C and 2.00 bar and exits the pump as S-182 at 59.6°C and 3.91 bar. The pump is a centrifugal pump with a pumping efficiency of 70% and a pressure head of 2.90 bar. It has a power of 11.18 kW, however, only 11.18 kW of electricity is required given that the stream is entering at a higher pressure than it was designed for in the ethanol plant. It is made of 316-grade stainless steel and was purchased for $15,000. It uses 88,546 kWh/year of electricity.

Fermentation: Process Description

Clostridia can convert starch directly to organic solvent products and thus this process bypasses the traditional saccharification stage present in corn ethanol plants. Saccharification uses glucoamylase to convert the starch to glucose prior to the yeast fermentation of ethanol and requires sulfuric acid. Clostridia, the bacteria used in this process, are sensitive to changes in pH and sulfuric acid would kill them, so it is better to convert the corn slurry directly to products. "Use of starch as a feed for butanol bioconversion processes…added economic advantage over the use of glucose" (Ezeji et. al., 2004).

To find the stoichiometric reaction needed to convert the corn slurry to solvents without doing laboratory experiments, the mass ratio of solvents was used and the amount of reactants needed was calculated backwards. Due to the lack of information regarding reaction stoichiometry for the production of organic solvents directly from starch, a conversion was used such that 1 kg of starch with 0.11 kg of water yields 1.11 kg of glucose (Marine, n.d.). The calculations were then done using yields in grams of product per gram of glucose, despite the fact that the conversion to glucose is bypassed in this process. The process of obtaining these ratios is detailed in Appendix A. Appendix A also includes detailed calculations for each of the components in the S-REACTOR stream, which is the stream in which the reaction occurs.

A conversion factor of 0.951 was used as a parameter for glucose utilization based on a paper by Liu et. al. for the amount of starch converted to products versus consumed by the bacteria for cell growth. This is factored into all the calculations for S-REACTOR. It is assumed that all the starch entering the fermenters is consumed; this is a reasonable assumption given that the bacteria constantly need energy while the fermenters are in continuous operation.

The fermentation section of this proposed process is anaerobic and will be operated semi-continuously. The tanks will be sparged with nitrogen at start-up and then run for approximately three weeks, an estimate based on experimental research, before being cleaned. While this amount of time is slightly dependent on solvent production, the choice of three weeks was made based on a comparison of the amount of acid produced during traditional ABE fermentation, compared to the amount of acid produced in the proposed process with differing ratios of acetic and butyric acid production. It was calculated that for every gram of acid traditionally produced, 0.724 grams of acid are produced in the proposed fermentation. As such, the process should be able to operate longer for the proposed process before the fermentation becomes acidogenic. Ezeji et. al. were able to have continuous solvent production for approximately 400 hours, so that divided by the 0.724 gives an approximate operation time of 552 hours continuously, or about three weeks. Detailed calculations of this are shown in Appendix A.

The fermentation will alternate between two sets of fermenters so that the process can operate continuously for the duration of the year, thus start-up will begin 8 days prior to the end of the three weeks and this cycle will repeat. Following the last 21-hour incubation period in start up, the 500,000 L of the contents from the last start up vessel are added to the fermentation tank along with an additional 4,455,492 L of medium to fill the tank. 63% of the working volume will be filled and then the inflow will begin. There will be three fermenters operating simultaneously as unit 405V, each with a volume of 2.6MM liters and a dilution rate of 0.031 hr^{-1}. The fermentation is exothermic and cooling towers are used to maintain the fermenters at temperature of 37°C and NaOH is added using a controller to stabilize the pH at 6.6 since acetic and butyric acids are side-products of the ABE fermentation. The nitrogen is continuously added until the vapor stream reaches a steady state inside the fermenter and the space inside the reactor is filled

with S-129, which consists mainly of CO_2 and H_2. This is done so that oxygen does not enter the tank since the bacteria require anaerobic conditions for growth. The fermentation vessels are held 1.01 bar. The reaction products of the 405V fermenters were input in a FLASH in ASPEN to determine the concentrations of the exiting liquid and vapor streams. S-129, the vapor stream contains the majority of the CO_2 and H_2 with the exception of some dissolved gases in the liquid. S-129 does, however, carry sizeable amounts of acetone, butanol and ethanol. Despite this, the separation of ABE products from the vapor stream proved too energy inefficient and was not possible using changes in temperature and pressure or liquid-liquid extraction. As such, the stream will be sent to a thermal oxidizer in the steam processing plant that is assumed to be in existence on-site. A more detailed alternatives analysis for separation of this stream is included in Appendix B. In the proposed design, S-129 is burned and combustion occurs. This was modeled in ASPEN, in the presence of excess air, to determine the amount of CO_2 and H_2O released into the atmosphere. The heat duty recovered from this process is -25,634,000 cal/sec.

S-132 contains the majority of the organic products and the water from the process and medium. It is first passed through 406P, a 18.9 kW pump that brings the stream from 1.01 bar to 4.46 bar. It is then passed through three countercurrent heat exchangers, 401E, 315E and 316E, where its temperature is first increased to 53.2°C, then decreased to 34°C and then increased to 78.77°C as S-125. While this is not optimal, this was done to preserve the countercurrent heat exchanges between streams, as they are currently configured in the existing plant. Without cooling the stream to 34°C before the final heat exchange, the exiting stream from 316E was too hot to proceed into the separation process. Its pressure is increased to 6.18 bar in 407P between 401E and 315E. S-125, the liquid product stream following the heat exchange and pressure changes then goes through a valve to reduce the pressure in the stream from 6.18 bar to 1.0 bar.

The pressure of this stream is increased and then decreased so that the stream can withstand the numerous heat exchanges. It is ultimately lowered so that the stream can enter the separation process at the operating pressure of column.

Prior to entering the liquid separation process, S-141 is run through a rotary drum filter RD1 to remove the solids for DDGS processing. S-147 exits filtration and moves on to the DDGS process and S-HEATBRO2 continues to the ABE separation train at a temperature of 78.14°C. The process flow diagram and accompanying material balance containing the information discussed above is presented in Figures 8 and 9, respectively.

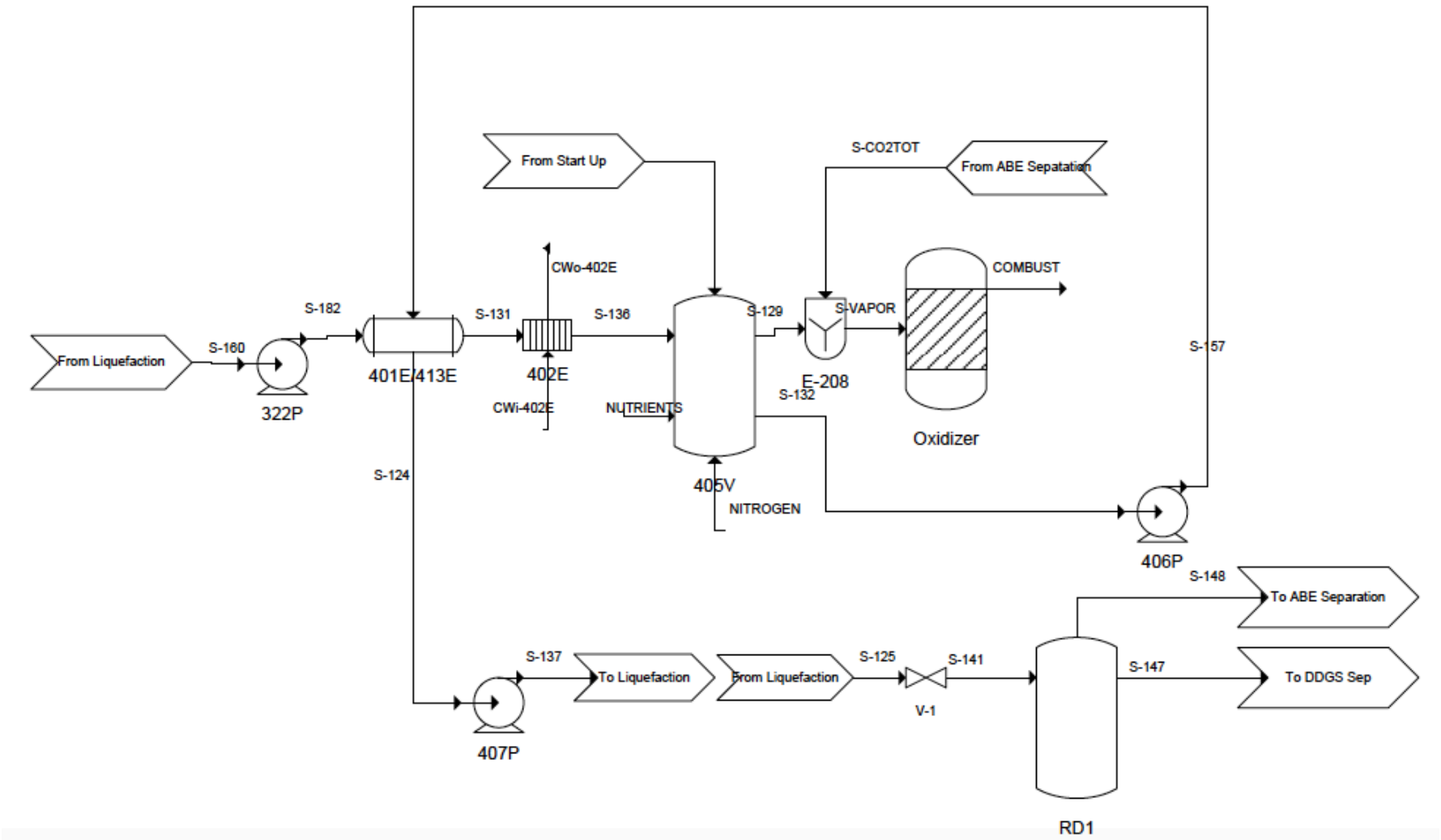

Figure 8. Process flow diagram of the fermentation section. This section utilizes most of the equipment from the original plant, however a different fermentation takes place. The corn slurry from liquefaction and is fermented using a Clostridia strain to make acetone, butanol, and ethanol. The fermentation also produces acetic acid and butyric acid by-products. The vapor phase of the fermentation product is sent to combustion and the liquid and solid phases are sent to their respective separation trains.

Stream ID	Molc. Weight (g/gmol)	S-182	S-125	S-157	S-124	S-131	CWi-402E	CWo-402E	S-136	NUTRIENTS	S-REACTOR	S-129	S-VAPOR	AIR IN	COMBUST
Temperature (C)		59.58	78.77	37.00	53.22	45.40	25.00	35.18	37.00	25.00	37.00	37.00	38.73	25.00	37.00
Pressure (bar)		3.91	6.18	4.46	4.46	3.91	1.00	1.00	3.91	1.00	1.01	1.01	1.06	1.01	1.01
Total Mass Flow (kg/h)		149826.03	143152.30	143152.30	143152.30	149826.03	125000.00	125000.00	149826.03	9369.06	158873.47	15721.17	16542.29	15102.70	3682522.19
Total Mole Flow (kmol/h)		6346.70	6256.75	6256.75	6256.75	6346.70	6936.74	6936.74	6346.70	n/a	n/a	500.42	518.12	523.47	129466.03
Component Flow (kg/h)															
Non-starch Poly	162.02	3291.50	3291.50	3291.50	3291.50	3291.50	0.00	0.00	3291.50	0.00	3291.50	0.00	0.00	0.00	0.00
Oil	18.02	1724.07	1724.07	1724.07	1724.07	1724.07	0.00	0.00	1724.07	0.00	1724.07	0.00	0.00	0.00	0.00
Other Solids	180.16	4525.38	5040.75	5040.75	5040.75	4525.38	0.00	0.00	4525.38	0.00	5040.75	0.00	0.00	0.00	0.00
Protein - insoluble	180.16	2328.13	2328.13	2328.13	2328.13	2328.13	0.00	0.00	2328.13	0.00	2328.13	0.00	0.00	0.00	0.00
Protein - soluble	180.16	2139.66	2561.33	2561.33	2561.33	2139.66	0.00	0.00	2139.66	0.00	2561.33	0.00	0.00	0.00	0.00
Starch	162.00	27495.95	0.00	0.00	0.00	27495.95	0.00	0.00	27495.95	0.00	0.00	0.00	0.00	0.00	0.00
Water	18.02	108318.65	106421.97	106421.97	106421.97	108318.65	125000.00	125000.00	108318.65	0.00	106843.96	421.99	449.69	0.00	14634.88
Carbon dioxide (CO2)	44.01	0.00	939.16	939.16	939.16	0.00	0.00	0.00	0.00	0.00	15562.84	14623.68	15013.86	0.00	46381.22
Ethanol	46.07	0.04	152.02	152.02	152.02	0.04	0.00	0.00	0.04	0.00	157.65	5.63	15.51	0.00	0.00
Acetone	58.08	0.40	1603.96	1603.96	1603.96	0.40	0.00	0.00	0.40	0.00	1891.80	287.84	650.23	0.00	0.00
Butanol	74.12	2.26	9039.25	9039.25	9039.25	2.26	0.00	0.00	2.26	0.00	9143.72	104.48	134.48	0.00	0.00
Nitrogen	28.02	0.00	0.00	0.00	0.00	0.00	0.00	0.00	0.00	0.00	0.00	0.00	0.00	11602.70	3250320.00
Glucose	180.16	0.00	0.00	0.00	0.00	0.00	0.00	0.00	0.00	0.00	0.00	0.00	0.00	0.00	0.00
Clostridia bacteria	n/a	0.00	321.93	321.93	321.93	0.00	0.00	0.00	0.00	0.00	321.93	0.00	0.00	0.00	0.00
Nutrients	n/a	0.00	9369.06	9369.06	9369.06	0.00	0.00	0.00	0.00	9369.06	9369.06	0.00	0.00	0.00	0.00
Acetic Acid	60.05	0.00	104.25	104.25	104.25	0.00	0.00	0.00	0.00	0.00	104.96	0.71	0.81	0.00	0.00
Butyric Acid	88.11	0.00	252.81	252.81	252.81	0.00	0.00	0.00	0.00	0.00	253.49	0.68	0.68	0.00	0.00
Oxygen	32.00	0.00	0.00	0.00	0.00	0.00	0.00	0.00	0.00	0.00	0.00	0.00	0.00	3500.00	371186.08
Hydrogen	2.00	0.00	2.11	2.11	2.11	0.00	0.00	0.00	0.00	0.00	278.26	276.15	277.03	0.00	0.00
Mesitylene	120.19	0.00	0.00	0.00	0.00	0.00	0.00	0.00	0.00	0.00	0.00	0.00	0.01	0.00	0.00

Stream ID	Molc. Weight (g/gmol)	S-132	S-133	S-175	S-139	S-141	S-146	S-147	S-HEATBRO2
Temperature (C)		37.00	37.00	81.00	99.38	78.14	78.14	78.14	78.14
Pressure (bar)		1.01	1.00	1.01	1.01	1.00	1.00	1.00	1.00
Total Mass Flow (kg/h)		143152.30	15721.17	143152.30	143152.30	143152.30	143152.30	49284.33	93867.97
Total Mole Flow (kmol/h)		6256.75	500.42	6256.75	6256.75	6256.75	6256.75	1538.45	4718.30
Component Flow (kg/h)									
Non-starch Poly	162.02	3291.50	0.00	3291.50	3291.50	3291.50	3291.50	3291.50	0.00
Oil	18.02	1724.07	0.00	1724.07	1724.07	1724.07	1724.07	1724.07	0.00
Other Solids	180.16	5040.75	0.00	5040.75	5040.75	5040.75	5040.75	5040.75	0.00
Protein - insoluble	180.16	2328.13	0.00	2328.13	2328.13	2328.13	2328.13	2328.13	0.00
Protein - soluble	180.16	2561.33	0.00	2561.33	2561.33	2561.33	2561.33	2561.33	0.00
Starch	162.00	0.00	0.00	0.00	0.00	0.00	0.00	0.00	0.00
Water	18.02	106421.97	421.99	106421.97	106421.97	106421.97	106421.97	24636.77	81785.20
Carbon dioxide (CO2)	44.01	939.16	14623.68	939.16	939.16	939.16	939.16	0.00	939.16
Ethanol	46.07	152.02	5.63	152.02	152.02	152.02	152.02	0.15	151.87
Acetone	58.08	1603.96	287.84	1603.96	1603.96	1603.96	1603.96	1.60	1602.36
Butanol	74.12	9039.25	104.48	9039.25	9039.25	9039.25	9039.25	9.04	9030.21
Nitrogen	28.02	0.00	0.00	0.00	0.00	0.00	0.00	0.00	0.00
Glucose	180.16	0.00	0.00	0.00	0.00	0.00	0.00	0.00	0.00
Clostridia bacteria	n/a	321.93	0.00	321.93	321.93	321.93	321.93	321.93	0.00
Nutrients	n/a	9369.06	0.00	9369.06	9369.06	9369.06	9369.06	9369.06	0.00
Acetic Acid	60.05	104.25	0.71	104.25	104.25	104.25	104.25	0.00	104.25
Butyric Acid	88.11	252.81	0.68	252.81	252.81	252.81	252.81	0.00	252.81
Oxygen	32.00	0.00	0.00	0.00	0.00	0.00	0.00	0.00	0.00
Hydrogen	2.00	2.11	276.15	2.11	2.11	2.11	2.11	0.00	2.11
Mesitylene	120.19	0.00	0.00	0.00	0.00	0.00	0.00	0.00	0.00

Figure 9. Material balance containing all the streams in the fermentation section of the process.

Fermentation: Equipment Descriptions

Heat Exchanger, 401E

This shell and tube heat exchanger uses countercurrent heat transfer between streams to cool S-182 from 59.6°C and 3.91 bar to S-131 at 45.4°C and 3.91 bar. This is accomplished by concurrently heating stream S-157 from 37°C and 4.46 bar to 53.23°C and 4.46 bar in S-124. The total heat transfer area, without fouling, found using ASPEN is 401.71 m^2. The actual area of the heat exchanger is 197.97 m^2, so the streams will be split proportional to the area and the heat exchange will be done using 401E as well as 413E. The combined area of the two heat exchangers is 430.83 m^2, which is sufficient to account for fouling as well. To split the streams proportionally, 46% of S-182 and S-157 will enter 401E. Unit 401E is made of 304-grade stainless steel and cost $285,000 to purchase. The heat duty of this exchanger is 46% of the overall heat duty and is thus 274,995 cal/sec, the average heat transfer coefficient is 0.02 cal/s-cm^2-K and the LMTD is 7.33°C. While the approach for this heat exchanger is small at 6°C, it was simulated in ASPEN, runs without warnings or errors and works in both the total area available for heat exchange and within the larger heat exchanger network as a whole. Due to the large heat integration between process streams that was conserved in this design, the minimum approach is not a concern.

Heat Exchanger, 413E

This shell and tube heat exchanger has an area of 232.86 m^2 and thus takes 54% of the split from streams S-182 and S-157. This exchanger is made of 304-grade stainless steel and was purchased for $331,000. This exchanger was retrofit from a different section of the ethanol plant that was

not needed for this new process. The heat duty of this exchanger is 322,821 cal/sec, the average heat transfer coefficient is 0.02 cal/s-cm^2-K and the LMTD is 7.33°C. This heat exchange occurs simultaneously in unit 401E.

Heat Exchanger, 402E

This heater uses countercurrent heat transfer using cooling water to cool stream S-131 from 45.4°C and 3.91 bar to 37.0°C and 3.91 bar in stream S-136. This is accomplished by concurrently heating a cooling water stream CWI-402E from 25°C and 1 bar to 35.18°C and 1 bar in CWO-402E. The flow rate of cooling water is 125,000 kg/hr. The total heat transfer area, without fouling, found using ASPEN is 155.29 m^2. The actual area of the heat exchanger is 190.14 m^2. This exchanger is made of 304-grade stainless steel and cost $85,000 to purchase. The heat duty of this exchanger is 349,490 cal/sec, the average heat transfer coefficient is 0.02 cal/s-cm^2-K and the LMTD is 11.1°C.

Pump to Heat Exchanger 315E, PUMP-7, 407P

This pump is needed to pump S-124 from heat exchanger 401E to heat exchanger 315E. S-124 enters the pump at 53.22°C and 4.46 bar and exits the pump as S-137 at 53.29°C and 6.18 bar. The pump is a centrifugal pump with a pumping efficiency of 70% and a pressure head of 25.00 psi. It has a power of 9.52 kW, although only 9.17 kW are needed at 73.2% efficiency. It is made of 316-grade stainless steel and was purchased for $14,900. It uses 75,360 kWh/year of electricity.

Fermenters, 405V-A-F

These units are six fermenters that will be operated three at a time continuously for three weeks before being shut off and cleaned. The vessels are made out of 316-grade stainless steel and have a volume of 2,613 m^3. Upon start-up they are filled with medium such that the dilution rate, which is the flow rate of medium divided by the operating volume, in each tank is 0.031 hr^{-1}. This ensures that the organic products are sufficiently dilute so that they do not inhibit the bacteria growth. At start-up they are sparged with anaerobic grade nitrogen and S-136 enters the fermenters. The starch in this stream is converted at a rate of 95.1% to the products of the reaction given the selectivity and stoichiometry (Ezeji et. al., 2004). The reaction calculations are included for reference in Appendix A. The fermenters are controlled using cooling water from existing cooling towers such that their temperature remains at 37°C and pressure is 1.01 bar. Nutrients are replenished into the fermenter at a rate equivalent to the amount lost in the exiting fermentation broth by a volumetric calculation based on the components of P2 medium. The two fermenters that are not already in the ethanol plant will be purchased for $803,933, the price of the original fermentation equipment adjusted for inflation. An applied bare module factor of 4.16 brings the investment for new fermenters to $6,688,721. Each fermenter uses 480,909 kWh/year of electricity.

Valve, V-1

This valve is in the heat exchanger integration and takes S-125 at a pressure of 6.18 bar and releases the pressure to exit as S-141 at a pressure of 1 bar. This valve is not purchased as a separate piece of equipment since it is assumed to be part of the piping that is accounted for in the costing methods.

Rotary Drum Filter, RD-1

This unit is a rotary drum filter. It has a multi-compartment cylinder shell and internal filtrate piping. It has a medium filtration rate and a driver that has a rotor and drive motor base plate to remove the solids. It is made of A285C, low and intermediate strength carbon steel plates. It was projected to cost $60,000 in 1998 based on a tabular correlation in the ICARUS charts between flow rate and cost. The flow rate through this vessel is 4.50 m^3. As a result of inflation, the 2017 price of the rotary drum would be $87,280.12. Assuming a height to diameter ratio of 4:1, the height of this column is 4.51 m and the diameter is 1.1275 m. An applied bare module factor of 2.5, as suggested by Professor Fabiano, makes the total installed cost of this unit $218,200.

Fermentation Start-Up: Process Description

Traditional ABE fermentation has been done using various strains of Clostridia including Clostridium Acetobutylicum and Tyrobutylicum that produce ABE at a ratio of 3:6:1 by weight. U.S. 8497105 details that certain strains of Clostridia can produce a ratio of ABE product that is 12:58:1. These bioengineered bacteria will be used in this plant's fermentation process. They not only have higher butanol selectivity, but also have a higher tolerance for butanol, allowing the concentration of butanol to be slightly greater in the fermentation vessels. This also would allow for the duration of continuous fermentation to potentially be longer. Additional laboratory research would be needed to determine more precisely what the tolerance of the bacteria is.

While there is not significant information on the specific mutant bacteria that produces ABE at high butanol selectivity, it is assumed that its growth conditions are similar to other

Clostridia strains and this fermentation start-up is based on Clostridium beijerinckii, the most researched strain of bacteria with high butanol selectivity. The bacteria are grown in medium that contains 0.75 g/L of KH_2PO_4, 0.75 g/L of K_2HPO_4, 0.348 g/L of $MgSO_4$, 0.01 g/L of $MnSO_4 \cdot H_2O$, 0.01 g/L of $FeSO_4 \cdot 7H_2O$, 1 g/L of NaCl, 2 g/L of asparagine, 5 g/L of yeast extract, 2 g/L of $(NH_4)_2SO_4$, and 50 g/L of glucose. It is purchased as P2 medium and the nutrients are replenished as salts. The fermentation start-up is scaled by a factor of ten for each step in the start-up train in accordance with standard biotechnology procedures. As presented in Figure 10, 0.5 grams of soil-spore suspension of bacteria in 10 mL of seed medium in SU-1 is placed in boiling water for 90 seconds to heat-shock the cells. 5 mL of this suspension is then added to 95 mL of medium in SU-2. SU-2 is incubated for 21 hours at 37°C so that the bacteria reaches log-phase growth before half the contents of SU-2 are transferred to SU-3 and medium is added to SU-3 such that the incoming stream from SU-2 is 5% of the total volume in the vessel. The volumes of the streams for the cascade of start-up vessels can also be found in Figure 10. Each start-up reactor is incubated for 21 hours making the total start up time 8 days. All start-up vessels are sparged with anaerobic grade nitrogen to ensure that no oxygen enters the fermenters because it will kill the bacteria. The stream volumes for sparging are presented in Table 4. Furthermore, controllers are needed to maintain the pH at 6.6 using 4X NaOH solution.

Calculations of the volumes and dilution rates for start-up were made based on U.S. Patent 4520104 and are included with the fermentation calculations in Appendix A. Additionally, it is assumed that the existing ethanol plant has a clean in place system set up for the fermenters that are currently there. Given that this process uses fewer fermenters than that system is set up for at any given time, it is assumed that the system already in the plant is sufficient. The nine seed fermenters use 480,909 kWh/year of electricity.

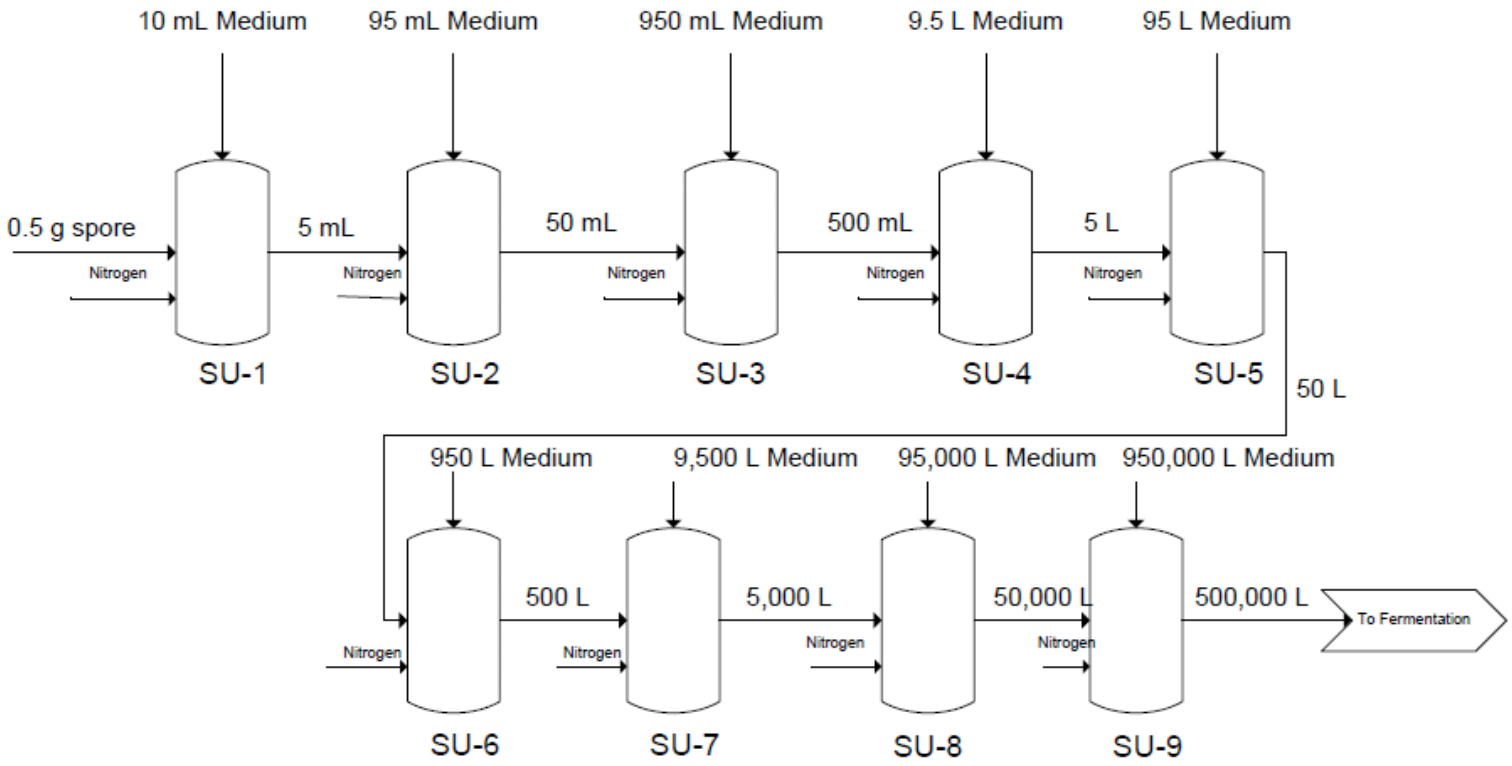

Figure 10. Process flow diagram of the fermentation start-up section. There are nine seed fermenters, each scaled up by a factor of ten from the preceding fermenter in accordance with standard biotechnology procedures. Stream volumes are also labeled for completeness in this figure.

Vessel Name	Volume Vessel	Volume Nitrogen
SU-1	60 mL	50 mL
SU-2	150 mL	50 mL
SU-3	1500 mL	500 mL
SU-4	15 L	5 L
SU-5	150 L	50 L
SU-6	1500 L	500 L
SU-7	15000 L	5000 L
SU-8	150000 L	50000 L
SU-9	1500000 L	500000 L

Table 4. Start up working volume of fermenter and volume of nitrogen needed to sparge the tank.

Fermentation Start-up: Equipment Descriptions

First seed tank, SU-1

This unit is a lab scale 60mL DASbox Mini Bioreactor system from Eppendorf. It will contain 0.5 g spore and 10 mL of medium and will be incubated at 37°C for 21 hours following heat shock. The unit can sparge the remaining working volume with nitrogen and contains four vessels, so two can be used for SU-1 and two for SU-2 such that the best cell culture can be the seed for the fermenters. This unit has gas flow control and mixing options, has agitation control and connected software. The DASbox Mini Bioreactor System is priced at $150,000 for 2017 and the price quote and further design detail can be found in Appendix D. A bare module factor of 1 is sufficient since SU-1 and SU-2 are supplied for laboratory scale production.

Second seed tank, SU-2

This unit is a lab scale 150mL DASbox Mini Bioreactor system from Eppendorf. It is within the same overall system as SU-1. It will contain 5mL of the contents of SU-1 and 95 mL of additional medium and the remainder of the working volume will be sparged with nitrogen. It

will be incubated at 37°C for 21 hours. This unit is the same as SU-1 it just has a different working volume and its cost is included in that of SU-1.

Third seed tank, SU-3

This unit is a bench scale 1500 mL BioFlo 115 from Eppendorf. It will contain 50 mL from SU-2 and an additional 950 mL of medium. The remainder of the bioreactor will be sparged with nitrogen. It will be incubated at 37°C for 21 hours. The BioFlo 115 has temperature control, gas flow options, and is compatible with the software from SU-1 and SU-2. The BioFlo 115 is priced at $26,000 for 2017 and the price quote and further design detail can be found in Appendix C. The total bare module cost of this unit is $108,160.

Fourth seed tank, SU-4

This unit is a bench scale 15 L BioFlo 510 from Eppendorf. It will contain 500 mL from SU-3 and an additional 9.5 L of medium. The remaining volume will be sparged with nitrogen. It will be incubated at 37°C for 21 hours. It is designed to "meet the needs of R&D through production" and has full controls and critical operational functionality. It is priced at $112,000 for 2017 and the price quote and further design detail can be found in Appendix C. While there were other cheaper alternatives for this size reactor, it was determined that the consistency in vendor and integration of controls software is worth the higher fixed costs. The total bare module cost of this unit is $465,920.

Fifth seed tank, SU-5

This unit is a pilot plant scale 150 L BioFlo Pro from Eppendorf. It will contain 5 L from SU-4 and an additional 95 L of medium. The remaining volume will be sparged with nitrogen. It will be incubated at 37°C for 21 hours. The BioFlo Pro adheres to appropriate industry specifications and is an ASME-rated pressure vessel. Additionally, it has impeller and gas flow options. It is priced at $290,000 for 2017 and the price quote and further design detail can be found in Appendix C. The total bare module cost of this unit is $1,206,400.

Sixth seed tank, SU-6

This unit is a pilot plant scale 1,500 L BioFlo Pro from Eppendorf. It will contain 50 L from SU-5 and an additional 950 L of medium. The remaining volume will be sparged with nitrogen. It will be incubated at 37°C for 21 hours. This unit is the same unit as SU-5 in a different size, and thus similarly adheres to appropriate industry specifications, is an ASME-rated pressure vessel, and has impeller and gas flow options. It is priced at $630,000 for 2017 and the price quote and further design detail can be found in Appendix C. The total bare module cost of this unit is $2,620,800.

Seventh seed tank, SU-7

This unit is a pilot plant scale 15,000 L bioreactor. It will contain 500 L from SU-6 and an additional 9,500 L of medium. The remaining volume will be sparged with nitrogen. It will be incubated at 37°C for 21 hours. This unit is an ASME-rated pressure vessel, and has impeller and gas flow options. Ideally, it would be custom built by Eppendorf. To price this vessel, given that prices are not readily available and that the costing sheet is not applicable for bioreactors, the difference in sizes and pricing between the largest fermenters, 405V-A-F and the last fermenter a

price quote was provided for, SU-6, were interpolated. This resulted in a price of $630,999. Actual prices in the market may deviate from this. The total bare module cost of this unit is $2,624,956.

Eight seed tank, SU-8

This unit is a small plant scale 150,000 L bioreactor. It will contain 5,000 L from SU-6 and an additional 95,000 L of medium. The remaining volume will be sparged with nitrogen. It will be incubated at 37°C for 21 hours. This unit is an ASME-rated pressure vessel, and has impeller and gas flow options. Ideally, it would be custom built by Eppendorf. To price this vessel, given that prices are not readily available and that the costing sheet is not applicable for bioreactors, the difference in sizes and pricing between the largest fermenters, 405V-A-F and the last fermenter a price quote was provided for, SU-6, were interpolated. This resulted in a price of $639,991. Actual prices in the market may deviate from this. The total bare module cost of this unit is $2,662,364.

Ninth seed tank, SU-9

This unit is a plant scale 1,500,000 L bioreactor. It will contain 50,000 L from SU-8 and an additional 950,000 L of medium. The remaining volume will be sparged with nitrogen. It will be incubated at 37°C for 21 hours. This unit is an ASME-rated pressure vessel, and has impeller and gas flow options. Ideally, it would be custom built by Eppendorf. To price this vessel, given that prices are not readily available and that the costing sheet is not applicable for bioreactors, the difference in sizes and pricing between the largest fermenters, 405V-A-F and the last fermenter a price quote was provided for, SU-6, were interpolated. This resulted in a price of $729,913.

Actual prices in the market may deviate from this. The total bare module cost of this unit is $3,036,436. While the prices of the last three seed fermenters are similar, interpolation was the most reasonable method of estimating these costs, and volume doesn't add significant cost to the tanks. The controls and technology embedded in the fermenters is what contributes to the high cost of these vessels and is relatively fixed rather than scaling with volume.

ABE Separation: Process Description

ABE separation recovers butanol and acetone products and recycles cleaned water and mesitylene. The process flow diagram and accompanying material balance are presented in Figures 11 and 12, respectively. The heated-broth, S-HEATBRO2 entering the separation process first undergoes liquid-liquid extraction at 25°C and 1 bar. It has 10 theoretical stages and 70 actual stages due to the low efficiency of LLEs. This LLE uses mesitylene as a solvent and removes 99.4 mol% of the water from the heated broth. The removed water is then added to all other recycled water streams before flowing through an activated carbon adsorption tank (AC-A or AC-B) and a 0.5 mol% purge to prevent organics from accumulating in the system; there will be two activated carbon tanks purchased so that the process can run continuously even when the carbon needs cleaning. The organic stream from the LLE, S-EXTRACT, is then cooled using a heat exchanger and has its pressure increased back to 2 bar, before entering COL1.

COL1 is a distillation column that removes essentially 100 mol% of the solvent from the extract stream. This distillation column runs at 2 bar, has 34 actual stages, and is an existing column in the ethanol plant. The bottoms of the column, which contains the solvent, is then cooled to 25°C and is lowered in pressure to 1 bar before having 1 mol% purged to avoid a

buildup of contaminating organics in the solvent. A partial condenser is used in this column as both vapor and distillate streams are necessary, due to the presence of CO_2. Without a vapor distillate stream the liquid distillate would have to be cooled to extremely low and unreasonable temperatures. The vapor distillate, containing 74 mol% of the CO_2, is then circled back to the CO_2 rich vapor stream from the fermenter so that the organics can be combusted and the resulting CO_2 released into the atmosphere. The liquid distillate, S-AEBW, is then cooled to 30°C. Its pressure is kept at 2 bar.

The organic rich stream, S-AEBW, enters COL2. COL2 is another repurposed distillation column from the existing ethanol plant. It again has both a liquid and vapor distillate stream and is run at 2 bar. It has 28 stages. The bottoms stream from COL2 is the butanol rich stream. This stream, S-BUTANOL, is 99.5 mol% butanol, and contains 92.5 mol% of the butanol entering the separation. This butanol is then cooled to 25°C. The vapor distillate contains 83 mol% of the remaining CO_2 and is recycled to the CO_2 rich vapor stream from the fermenter. The organics in S-CO21, S-CO22, and S-CO23 are sent to a thermal oxidizer to be combusted for heat recovery. The liquid distillate, S-AEW, is then cooled to 30°C and has its pressure increased to 2 bar. This stream contains mostly acetone and water, with some ethanol and butanol, and is fed to COL3.

COL3 is also repurposed from the ethanol plant. It had 27 stages, operates at 2 bar and has both a vapor and liquid distillate. The bottoms from this column, S-W-ETH, are cooled and then added back into the recycled water stream. S-W-ETH contains 60 mol% water. The vapor distillate, S-CO23, joins the other streams containing gaseous CO_2, and is recycled back to the vapor stream exiting the fermenter. The liquid distillate contains 88 mol% acetone and the remainder is mostly comprised of water. To overcome the water-acetone azeotrope, this stream, S-ACETONE, is then run through another liquid-liquid extraction in LLE2.

LLE2 is an extraction column with 3 theoretical stages and 21 actual stages due to the low efficiency of LLE. It is operated at 25 ^{o}C and 1 bar. The water phase, S-WATER, is added to the recycled water. The same solvent, mesitylene, is used again to form the organic phase in this separation. The organic phase, S-MESACETO, is then sent to COL4.

COL4 is a distillation column that will have to be purchased. It has 17 actual stages, an operating pressure of 1 bar, and only a liquid distillate. The column separates the solvent-acetone mixture in the feed into acetone and mesitylene streams. The bottoms, S-MESTILY2 is 99.6 mol% solvent. It enters a solvent recycle loop, goes through a 1 mol% purge and then a heat exchange and pump to bring its temperature and pressure back to 25 ^{o}C and 1 bar, respectively. The recycle loop feed the solvent back into LLE2. The distillate, S-ACETONE2 contains 93.2 mol% acetone and is cooled to 25°C before being transported to a holding tank.

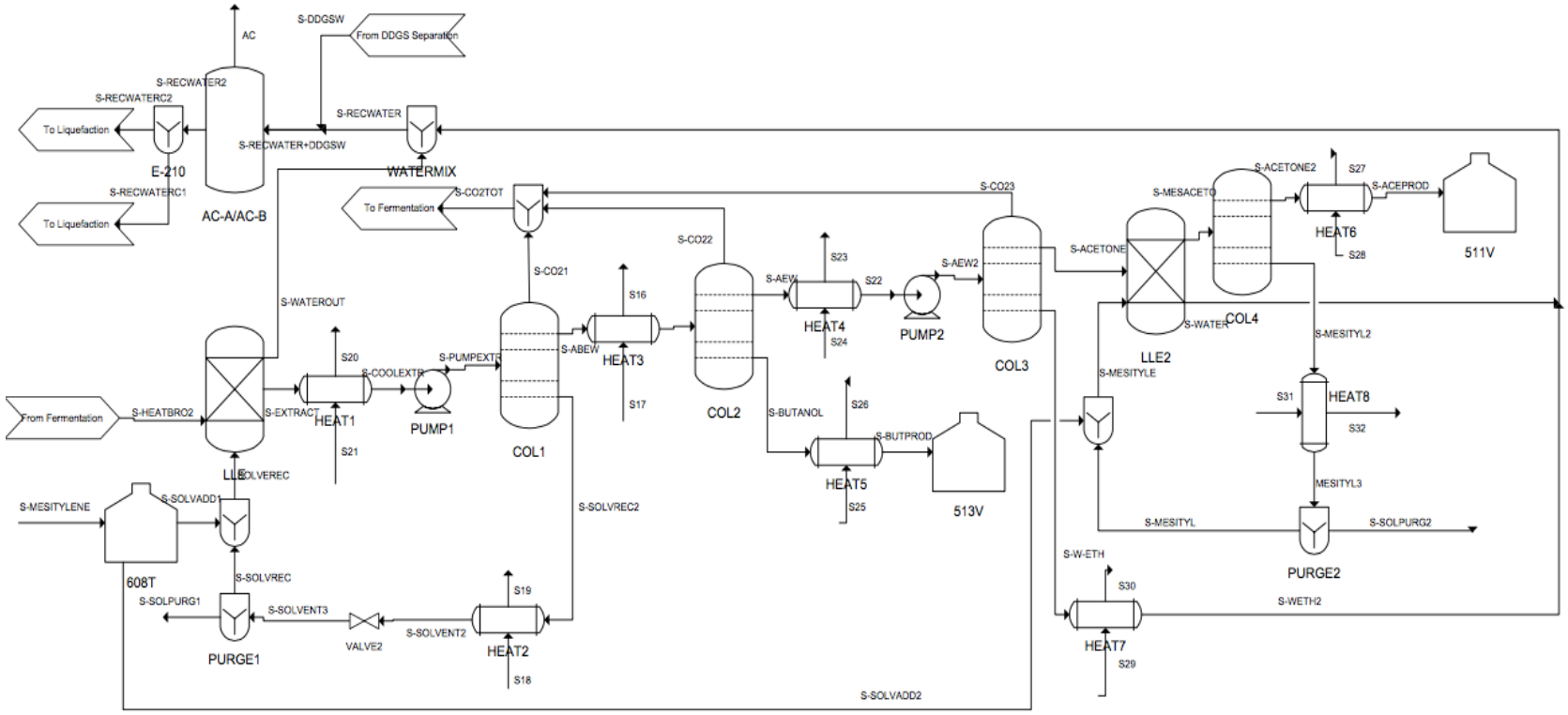

Figure 11. Process flow diagram of the ABE separation section. This section requires purchasing many new piece of equipment, as the original separation section in the corn ethanol plant would not be an efficient use of equipment. Liquid-liquid extraction is performed first in LLE, then separation in three distillation columns, another liquid-liquid extraction in LLE2, and a final distillation. CO_2 is sent to fermentation to be combusted, water is sent to various sections in a recycle stream, and most of the mesitylene is recycled back to the beginning of the ABE separation process.

Stream ID	Molc. Weight (g/gmol)	S-HEATBRO2	S-SOLVEREC	S-MESITYLENE	S-SOLVADD1	S-SOLVADD2	S-WATEROUT	S-EXTRACT	S-COOLEXTR	S21	S20	S-PUMPEXTR	S-SOLVREC2	S-CO21
Temperature (C)		78.14	25.00	25.00	25.00	25.00	30.80	73.16	50.00	12.00	71.53	50.08	192.68	70.78
Pressure (bar)		1.00	1.00	1.00	1.00	1.00	1.00	1.00	1.00	1.00	1.00	2.00	2.00	2.00
Total Mass Flow (kg/h)		93867.32	199987.75	2175.44	1995.15	180.29	81979.11	211897.64	211897.64	37481.60	37481.60	211897.64	200402.16	405.32
Total Mole Flow (kmol/h)		4718.26	1663.93	18.10	16.60	1.50	4529.37	1854.03	1854.03	2080.00	2080.00	1854.03	1669.03	9.25
Component Flow (kg/h)														
Non-starch Poly	162.02	0.00	0.00	0.00	0.00	0.00	0.00	0.00	0.00	0.00	0.00	0.00	0.00	0.00
Oil	18.02	0.00	0.00	0.00	0.00	0.00	0.00	0.00	0.00	0.00	0.00	0.00	0.00	0.00
Other Solids	180.16	0.00	0.00	0.00	0.00	0.00	0.00	0.00	0.00	0.00	0.00	0.00	0.00	0.00
Protein - insoluble	180.16	0.00	0.00	0.00	0.00	0.00	0.00	0.00	0.00	0.00	0.00	0.00	0.00	0.00
Protein - soluble	180.16	0.00	0.00	0.00	0.00	0.00	0.00	0.00	0.00	0.00	0.00	0.00	0.00	0.00
Starch	162.00	0.00	0.00	0.00	0.00	0.00	0.00	0.00	0.00	0.00	0.00	0.00	0.00	0.00
Water	18.02	81784.55	0.00	0.00	0.00	0.00	81365.43	441.16	441.16	37481.60	37481.60	441.16	0.00	8.83
Carbon dioxide (CO2)	44.01	939.16	0.00	0.00	0.00	0.00	546.88	392.28	392.28	0.00	0.00	392.28	0.00	288.79
Ethanol	46.07	151.87	0.00	0.00	0.00	0.00	0.11	151.76	151.76	0.00	0.00	151.76	0.00	2.17
Acetone	58.08	1602.36	0.00	0.00	0.00	0.00	0.05	1602.31	1602.31	0.00	0.00	1602.31	0.00	81.31
Butanol	74.12	9030.21	0.00	0.00	0.00	0.00	0.00	9029.87	9029.87	0.00	0.00	9029.87	159.22	23.24
Nitrogen	28.02	0.00	0.00	0.00	0.00	0.00	0.00	0.00	0.00	0.00	0.00	0.00	0.00	0.00
Glucose	180.16	0.00	0.00	0.00	0.00	0.00	0.00	0.00	0.00	0.00	0.00	0.00	0.00	0.00
Clostridia bacteria	n/a	0.00	0.00	0.00	0.00	0.00	0.00	0.00	0.00	0.00	0.00	0.00	0.00	0.00
Nutrients	n/a	0.00	0.00	0.00	0.00	0.00	0.00	0.00	0.00	0.00	0.00	0.00	0.00	0.00
Acetic Acid	60.05	104.25	0.00	0.00	0.00	0.00	60.63	43.62	43.62	0.00	0.00	43.62	7.30	0.10
Butyric Acid	88.11	252.81	0.00	0.00	0.00	0.00	0.00	252.81	252.81	0.00	0.00	252.81	252.81	0.00
Oxygen	32.00	0.00	0.00	0.00	0.00	0.00	0.00	0.00	0.00	0.00	0.00	0.00	0.00	0.00
Hydrogen	2.00	2.11	0.00	0.00	0.00	0.00	1.22	0.87	0.87	0.00	0.00	0.87	0.00	0.87
Mesitylene	120.19	0.00	199987.75	2175.44	1995.15	180.29	4.79	199982.95	199982.95	0.00	0.00	199982.95	199982.83	0.00

Stream ID	Molc. Weight (g/gmol)	S-AEBW	S-AEBW2	S17	S16	S-BUTANOL	S-BUTPROD	S25	S26	S-CO22	S-AEW	S22	S24	S23	S-AEW2	S-W-ETH
Temperature (C)		70.78	30.00	12.00	64.74	138.40	25.00	12.00	99.65	73.66	73.66	30.00	12.00	64.28	30.04	100.79
Pressure (bar)		2.00	2.00	1.00	1.00	2.00	2.00	1.00	1.00	2.00	2.00	2.00	1.00	1.00	2.50	2.16
Total Mass Flow (kg/h)		11090.17	11090.17	8469.40	8469.40	8385.71	8385.71	5315.90	5315.90	300.89	2403.56	2403.56	2162.40	2162.40	2403.56	1234.72
Total Mole Flow (kmol/h)		175.75	175.75	470.00	470.00	113.25	113.25	295.00	295.00	6.25	56.25	56.25	120.00	120.00	56.25	34.25
Component Flow (kg/h)																
Non-starch Poly	162.02	0.00	0.00	0.00	0.00	0.00	0.00	0.00	0.00	0.00	0.00	0.00	0.00	0.00	0.00	0.00
Oil	18.02	0.00	0.00	0.00	0.00	0.00	0.00	0.00	0.00	0.00	0.00	0.00	0.00	0.00	0.00	0.00
Other Solids	180.16	0.00	0.00	0.00	0.00	0.00	0.00	0.00	0.00	0.00	0.00	0.00	0.00	0.00	0.00	0.00
Protein - insoluble	180.16	0.00	0.00	0.00	0.00	0.00	0.00	0.00	0.00	0.00	0.00	0.00	0.00	0.00	0.00	0.00
Protein - soluble	180.16	0.00	0.00	0.00	0.00	0.00	0.00	0.00	0.00	0.00	0.00	0.00	0.00	0.00	0.00	0.00
Starch	162.00	0.00	0.00	0.00	0.00	0.00	0.00	0.00	0.00	0.00	0.00	0.00	0.00	0.00	0.00	0.00
Water	18.02	432.33	432.33	8469.40	8469.40	0.00	0.00	5315.90	5315.90	15.26	417.06	417.06	2162.40	2162.40	417.06	371.11
Carbon dioxide (CO2)	44.01	103.49	103.49	0.00	0.00	0.00	0.00	0.00	0.00	86.43	17.06	17.06	0.00	0.00	17.06	0.00
Ethanol	46.07	149.59	149.59	0.00	0.00	0.00	0.00	0.00	0.00	7.41	142.17	142.17	0.00	0.00	142.17	137.24
Acetone	58.08	1520.99	1520.99	0.00	0.00	0.00	0.00	0.00	0.00	185.01	1335.98	1335.98	0.00	0.00	1335.98	235.07
Butanol	74.12	8847.42	8847.42	0.00	0.00	8349.71	8349.71	0.00	0.00	6.77	490.94	490.94	0.00	0.00	490.94	490.95
Nitrogen	28.02	0.00	0.00	0.00	0.00	0.00	0.00	0.00	0.00	0.00	0.00	0.00	0.00	0.00	0.00	0.00
Glucose	180.16	0.00	0.00	0.00	0.00	0.00	0.00	0.00	0.00	0.00	0.00	0.00	0.00	0.00	0.00	0.00
Clostridia bacteria	n/a	0.00	0.00	0.00	0.00	0.00	0.00	0.00	0.00	0.00	0.00	0.00	0.00	0.00	0.00	0.00
Nutrients	n/a	0.00	0.00	0.00	0.00	0.00	0.00	0.00	0.00	0.00	0.00	0.00	0.00	0.00	0.00	0.00
Acetic Acid	60.05	36.23	36.23	0.00	0.00	35.87	35.87	0.00	0.00	0.00	0.35	0.35	0.00	0.00	0.35	0.35
Butyric Acid	88.11	0.00	0.00	0.00	0.00	0.00	0.00	0.00	0.00	0.00	0.00	0.00	0.00	0.00	0.00	0.00
Oxygen	32.00	0.00	0.00	0.00	0.00	0.00	0.00	0.00	0.00	0.00	0.00	0.00	0.00	0.00	0.00	0.00
Hydrogen	2.00	0.00	0.00	0.00	0.00	0.00	0.00	0.00	0.00	0.00	0.00	0.00	0.00	0.00	0.00	0.00
Mesitylene	120.19	0.12	0.12	0.00	0.00	0.12	0.12	0.00	0.00	0.00	0.01	0.01	0.00	0.00	0.01	0.00

Figure 12. Material balance containing all the streams in the ABE separation section of the process.

Stream ID	Molc. Weight (g/gmol)	S-CO23	S-ACETONE	S-MESITYLE	S-WATER	S-MESACETO	S-MESITYL2	S-ACETONE2	S-ACEPROD	S28	S27	S-SOLVENT2	S18	S19	S-SOLVENT3
Temperature (C)		72.38	72.38	25.00	24.77	27.52	162.18	49.44	25.00	12.00	41.28	25.00	12.00	99.65	24.95
Pressure (bar)		2.00	2.00	1.00	1.00	1.00	1.00	1.00	1.00	1.00	1.00	2.00	1.00	1.00	1.00
Total Mass Flow (kg/h)		114.91	1053.94	18028.50	22.37	19060.07	18060.52	999.55	999.55	450.50	450.50	200402.16	90100.00	90100.00	200402.16
Total Mole Flow (kmol/h)		2.20	19.80	150.00	1.24	168.56	150.56	18.00	18.00	25.00	25.00	1669.03	5000.00	5000.00	1669.03
Component Flow (kg/h)															
Non-starch Poly	162.02	0.00	0.00	0.00	0.00	0.00	0.00	0.00	0.00	0.00	0.00	0.00	0.00	0.00	0.00
Oil	18.02	0.00	0.00	0.00	0.00	0.00	0.00	0.00	0.00	0.00	0.00	0.00	0.00	0.00	0.00
Other Solids	180.16	0.00	0.00	0.00	0.00	0.00	0.00	0.00	0.00	0.00	0.00	0.00	0.00	0.00	0.00
Protein - insoluble	180.16	0.00	0.00	0.00	0.00	0.00	0.00	0.00	0.00	0.00	0.00	0.00	0.00	0.00	0.00
Protein - soluble	180.16	0.00	0.00	0.00	0.00	0.00	0.00	0.00	0.00	0.00	0.00	0.00	0.00	0.00	0.00
Starch	162.00	0.00	0.00	0.00	0.00	0.00	0.00	0.00	0.00	0.00	0.00	0.00	0.00	0.00	0.00
Water	18.02	3.61	42.35	0.00	22.37	19.97	0.00	19.97	19.97	450.50	450.50	0.00	90100.00	90100.00	0.00
Carbon dioxide (CO2)	44.01	14.95	2.11	0.00	0.00	2.11	0.00	2.11	2.11	0.00	0.00	0.00	0.00	0.00	0.00
Ethanol	46.07	0.29	4.64	0.00	0.00	4.64	1.58	3.06	3.06	0.00	0.00	0.00	0.00	0.00	0.00
Acetone	58.08	96.06	1004.84	0.00	0.00	1004.84	30.44	974.40	974.40	0.00	0.00	0.00	0.00	0.00	0.00
Butanol	74.12	0.00	0.00	0.00	0.00	0.00	0.00	0.00	0.00	0.00	0.00	159.22	0.00	0.00	159.22
Nitrogen	28.02	0.00	0.00	0.00	0.00	0.00	0.00	0.00	0.00	0.00	0.00	0.00	0.00	0.00	0.00
Glucose	180.16	0.00	0.00	0.00	0.00	0.00	0.00	0.00	0.00	0.00	0.00	0.00	0.00	0.00	0.00
Clostridia bacteria	n/a	0.00	0.00	0.00	0.00	0.00	0.00	0.00	0.00	0.00	0.00	0.00	0.00	0.00	0.00
Nutrients	n/a	0.00	0.00	0.00	0.00	0.00	0.00	0.00	0.00	0.00	0.00	0.00	0.00	0.00	0.00
Acetic Acid	60.05	0.00	0.00	0.00	0.00	0.00	0.00	0.00	0.00	0.00	0.00	7.30	0.00	0.00	7.30
Butyric Acid	88.11	0.00	0.00	0.00	0.00	0.00	0.00	0.00	0.00	0.00	0.00	252.81	0.00	0.00	252.81
Oxygen	32.00	0.00	0.00	0.00	0.00	0.00	0.00	0.00	0.00	0.00	0.00	0.00	0.00	0.00	0.00
Hydrogen	2.00	0.00	0.00	0.00	0.00	0.00	0.00	0.00	0.00	0.00	0.00	0.00	0.00	0.00	0.00
Mesitylene	120.19	0.01	0.00	18028.50	0.00	18028.50	18028.50	0.00	0.00	0.00	0.00	199982.83	0.00	0.00	199982.83

Stream ID	Molc. Weight (g/gmol)	S-SOLPURG1	S-SOLVREC	S-MESITYL3	S31	S32	S-SOLPURG2	S-MESITYL	S-WETH2	S29	S30	S-RECWATER	S-RECWATER+DDGSW	S-AC	
Temperature (C)		24.95	24.95	25.00	12.00	99.65	25.00	25.00	30.00	12.00	94.76	30.99	41.80	25.00	
Pressure (bar)		1.00	1.00	1.00	1.00	1.00	1.00	1.00	1.16	1.00	1.00	1.00	1.00	1.00	
Total Mass Flow (kg/h)		2004.02	2394.96	18060.52	6667.40	6667.40	180.61	17879.92	1234.72	1261.40	1261.40	83236.20	111326.64	20740.04	
Total Mole Flow (kmol/h)		16.69	21.56	150.56	370.00	370.00	1.51	149.05	34.25	70.00	70.00	4564.86	5929.97	902.96	
Component Flow (kg/h)															
Non-starch Poly	162.02	0.00	0.00	0.00	0.00	0.00	0.00	0.00	0.00	0.00	0.00	0.00	0.00	0.00	
Oil	18.02	0.00	0.00	0.00	0.00	0.00	0.00	0.00	0.00	0.00	0.00	0.00	0.00	0.00	
Other Solids	180.16	0.00	0.00	0.00	0.00	0.00	0.00	0.00	0.00	0.00	0.00	0.00	0.00	0.00	
Protein - insoluble	180.16	0.00	0.00	0.00	0.00	0.00	0.00	0.00	0.00	0.00	0.00	0.00	0.00	0.00	
Protein - soluble	180.16	0.00	0.00	0.00	0.00	0.00	0.00	0.00	0.00	0.00	0.00	0.00	0.00	0.00	
Starch	162.00	0.00	0.00	0.00	0.00	0.00	0.00	0.00	0.00	0.00	0.00	0.00	0.00	0.00	
Water	18.02	0.00	0.00	0.00	6667.40	6667.40	0.00	0.00	371.11	1261.40	1261.40	81758.91	100559.79	9973.20	
Carbon dioxide (CO2)	44.01	0.00	0.00	0.00	0.00	0.00	0.00	0.00	0.00	0.00	0.00	546.88	546.88	546.88	
Ethanol	46.07	0.00	0.00	1.58	0.00	0.00	0.02	1.57	137.24	0.00	0.00	137.35	137.47	137.47	
Acetone	58.08	0.00	0.00	30.44	0.00	0.00	0.30	30.14	235.07	0.00	0.00	235.12	236.32	236.32	
Butanol	74.12	1.59	157.63	0.00	0.00	0.00	0.00	0.00	490.95	0.00	0.00	490.95	497.73	497.73	
Nitrogen	28.02	0.00	0.00	0.00	0.00	0.00	0.00	0.00	0.00	0.00	0.00	0.00	7119.97	7119.97	
Glucose	180.16	0.00	0.00	0.00	0.00	0.00	0.00	0.00	0.00	0.00	0.00	0.00	0.00	0.00	
Clostridia bacteria	n/a	0.00	0.00	0.00	0.00	0.00	0.00	0.00	0.00	0.00	0.00	0.00	0.00	0.00	
Nutrients	n/a	0.00	0.00	0.00	0.00	0.00	0.00	0.00	0.00	0.00	0.00	0.00	0.00	0.00	
Acetic Acid	60.05	0.07	7.22	0.00	0.00	0.00	0.00	0.00	0.35	0.00	0.00	60.98	60.98	60.98	
Butyric Acid	88.11	2.53	250.29	0.00	0.00	0.00	0.00	0.00	0.00	0.00	0.00	0.00	0.00	0.00	
Oxygen	32.00	0.00	0.00	0.00	0.00	0.00	0.00	0.00	0.00	0.00	0.00	0.00	2161.48	2161.48	
Hydrogen	2.00	0.00	0.00	0.00	0.00	0.00	0.00	0.00	0.00	0.00	0.00	1.22	1.22	1.22	
Mesitylene	120.19	1999.83	1979.83	18028.50	0.00	0.00	180.29	17848.22	0.00	0.00	0.00	4.79	4.79	4.79	

Figure 12. Material balance containing all the streams in the ABE separation section of the process, continued.

Stream ID	Molc. Weight (g/gmol)	S-RECWATER2	S-RECWATERC1	S-RECWATERC2	S-CO2TOT
Temperature (C)		41.80	41.80	41.80	71.78
Pressure (bar)		1.00	1.00	1.00	2.00
Total Mass Flow (kg/h)		90586.60	11877.00	78709.60	821.12
Total Mole Flow (kmol/h)		5027.00	659.10	4367.90	17.70
Component Flow (kg/h)					
Non-starch Poly	162.02	0.00	0.00	0.00	0.00
Oil	18.02	0.00	0.00	0.00	0.00
Other Solids	180.16	0.00	0.00	0.00	0.00
Protein - insoluble	180.16	0.00	0.00	0.00	0.00
Protein - soluble	180.16	0.00	0.00	0.00	0.00
Starch	162.00	0.00	0.00	0.00	0.00
Water	18.02	90586.60	11877.00	78709.60	27.70
Carbon dioxide (CO2)	44.01	0.00	0.00	0.00	390.18
Ethanol	46.07	0.00	0.00	0.00	9.87
Acetone	58.08	0.00	0.00	0.00	362.39
Butanol	74.12	0.00	0.00	0.00	30.00
Nitrogen	28.02	0.00	0.00	0.00	0.00
Glucose	180.16	0.00	0.00	0.00	0.00
Clostridia bacteria	n/a	0.00	0.00	0.00	0.00
Nutrients	n/a	0.00	0.00	0.00	0.00
Acetic Acid	60.05	0.00	0.00	0.00	0.10
Butyric Acid	88.11	0.00	0.00	0.00	0.00
Oxygen	32.00	0.00	0.00	0.00	0.00
Hydrogen	2.00	0.00	0.00	0.00	0.87
Mesitylene	120.19	0.00	0.00	0.00	0.01

Figure 12. Material balance containing all the streams in the ABE separation section of the process, continued.

ABE Separation: Equipment Descriptions

Liquid-Liquid Extractor, EXTRACT-1, LLE

This unit is used to remove a vast amount of the water in the output from the fermenter, the heated fermentation broth. Liquid-liquid extraction was chosen because it a more cost effective way of separating out water from the organics than distillation, due to the large volume of water and energy that would be required. The solvent stream, S-SOLVEREC, is separating the organics in S-HEATBRO2 from the water in that stream. The organic rich stream is S-EXTRACT and the water rich stream is S-WATEROUT. The operating conditions at the top of the column are 1 bar and 25°C. It has 10 theoretical stages, and due to the low efficiency of extraction columns, 70 actual stages; to improve the efficiency of the column, a Karr extraction column could be used, as this column is able to maintain uniform shear mixing, through Karr's specially designed trays. Leaving excess room both end of the column allows for a total height of 24 m, a diameter of 3.45 m and total volume of 225 m^3, which allows for working volume of 85% Given the size of the column, the column can be transported from its construction location to the plant with minimal difficulty. It is constructed from low-alloy steel, and the total installed cost of the column, including trays, is $1,854,000.

Heat Exchanger, HEAT1

This unit is a shell and tube heat exchanger. It uses countercurrent heat transfer to cool the extract, stream S-EXTRACT, from the first liquid-liquid extraction. The chilled water lowers the extract temperature from 69.3°C to 50°C. The cooling water in S-21 comes into the heat exchanger at 12°C and leaves at 59.1°C. The entire heat exchanger is operated at a pressure of 1

bar. The total heat transfer area, found using ASPEN, is 120.5 m^2. This exchanger is made of stainless steel and cost $192,182 to purchase. The heat duty of this exchanger is 515,906 cal/sec, the average heat transfer coefficient is 0.02 cal/s-cm2-K, and the LMTD is 21.1°C. The amount of cooling water needed is 39,634 kg/hr.

Pump to DISTILL-1, 411P

This pump is used to increase the pressure of the cooled extract from LLE1. S-COOLEXTR enters the pump at a pressure of 1 bar and exits as S-PUMPEXTR with a pressure of 2 bar. The required work is 9.01 kW. Rather than buying a new pump, centrifugal pump 411P in the ethanol plant will be able to perform this pressure change. This pump is made of 316-grade stainless steel, has a pumping efficiency of 70% and a pressure head of 3.10 bar. Additionally, it has the capacity to overcome any increased energy needed in case of elevation changes and can pump up to 37.3 kW. This pump was purchased for $16,100. It uses 71,359 kWh/year of electricity.

Distillation Column, DISTILL-1, COL1 (501T)

This unit is a distillation column, modeled in RADFRAC, that is used to separate the organics from the solvent. The organic products exit in the liquid distillate, S-AEBW. The solvent comprises the bottoms and leaves as S-SOLVREC2. There is also a gas distillate stream, S-CO21. The column has 20 theoretical stages, and assuming 60% efficiency, 34 actual stages. The feed, S-PUMPEXTR, enters on theoretical stage 10. The design pressure of the column is 1.50 bar gauge, the operating pressure of the column is 2 bar, the reflux ratio is 5, the distillate vapor fraction is 0.05, and the molar distillate rate is 185 kmol/hr. The top stage temperature is 70.8°C. The liquid distillate stream, S-AEBW, contains 97.7 mol% of the butanol, 95.0 mol% of the

acetone, and 98.7 mol% of the ethanol entering the column. The solvent outlet stream, S-SOLREC2, contains nearly 100% of the solvent. The column height is 15.5 m and the diameter is 2.8 m and it has a volume of 96.6 m^3. The reboiler duty is 7,748,590 cal/s and the condenser duty is -3,759,900 cal/s. The column is made of 304-grade stainless steel and would cost for $597,000 if we had to buy it; however, this column already exists in the purchased ethanol plant. It uses 132,174,337 kWh/year of electricity.

Heat Exchanger, HEAT2

This unit is a shell and tube heat exchanger that cools the recycled solvent stream after it comes out of COL1 as stream S-SOLVREC2. It uses countercurrent heat transfer to lower the temperature of the solvent from 192.8°C to 25°C. The chilled water temperature, in S-18, rises from 12°C to 99.6°C; even though this water is now probably mostly steam, it can still be sent back to the cooling tower to be re-cooled. This exchanger is operated at 1 bar. The total heat transfer area is 1004 m^2 and was found using ASPEN. This exchanger is made of stainless steel and cost $672,377 to purchase. The heat duty of this exchanger is 4,561,010 cal/s, the average heat transfer coefficient is 0.02 cal/s-cm2-K, and the LMTD is 22.37°C. The amount of cooling water needed is 91,878 kg/hr.

Valve to Solvent Purge, VALVE-2

This valve is used to reduce the pressure of the recycled solvent in stream S-SOLVENT2 from 2 bar to 1 bar as it exits as stream S-SOLVENT3. The required work for this pressure change is -4.99 kW. The cost of the valve is included in the cost of piping.

Heat Exchanger, HEAT3

This unit is a shell and tube heat exchanger that cools the distillate from COL1, S-AEBW. S-AEBW is cooled from 63.3°C to 30°C using countercurrent heat transfer. S-17, the chilled water stream, is heated from 12°C to 52.6°C. The operating pressure is 1 bar, and the total heat transfer area is 35.42 m^2. This exchanger is made of stainless steel and cost $139,262 to purchase. The heat duty of this exchanger is 100,724 cal/s, the average heat transfer coefficient is 0.02 cal/s-cm2-K, and the LMTD is 14°C. The amount of cooling water needed is 9,008 kg/hr.

Distillation Column, DISTILL-2, COL2 (503T)

This column is a distillation column, modeled with RADFRAC, that is used to separate butanol from the other organics. The butanol exits in the bottoms stream, S-BUTANOL, and the distillate has both vapor and liquid streams, S-CO22 and S-AEW respectively. The column has 17 theoretical stages, and assuming an efficiency of 60%, 28 actual stages. The feed, S-AEBW2, enters on theoretical stage 8. The column has a design pressure of 3.00 bar gauge, will operate at a pressure of 2 bar, reflux ratio of 2, vapor distillate fraction of 0.1 and molar distillate rate of 62.5kmol/hr. The top stage temperature is 73.7°C. The bottoms product contains 95 mol% of the butanol entering the column, and the stream has a mole fraction of 0.997 for butanol. 86.8 mol% of the acetone and 94 mol% of the ethanol go into the S-AEW, the liquid distillate stream. The majority of the remainder of these organics goes into the vapor distillate, S-CO22. The column height 16.6 m, the diameter is 2.95 m and it has a volume of 113.57 m^3. The reboiler duty is 720,466 cal/s and the condenser duty is -466,998 cal/s. The column is made of 304-grade stainless steel and would cost $168,200 if it had to be purchased; however, this column already exists in the purchased ethanol plant. It uses 8,399,240 kWh/yr of electricity.

Pump to DISTILL-3, 318P

This pump is used to increase the pressure of the distillate from COL2, S-AEW, after it is cooled. S-22 enters the pump at a pressure of 2 bar and exits the pump as S-AEW2 at a pressure of 2.5 bar. The required work is 0.13 kW. Gear pump 318P from the original ethanol plant can be used for this pressure change. This pump is made of 316-grade stainless steel, has a pumping efficiency of 70% and a pressure head of $6.9*10^{-5}$ bar. It also has the capacity to overcome any increased energy needed in case of elevation changes and can pump up to 0.15 kW. This pump was purchased for $4,000. It uses 1,030 kWh/yr of electricity.

Heat Exchanger, HEAT4

This unit is a shell and tube heat exchanger that is used to cool the distillate from COL2, S-AEW. It uses countercurrent heat transfer to cool S-AEW from 72°C to 30°C. S-24, the chilled water stream, is heated from 12°C to 59.2°C. The pressure of the heat exchanger is 1 bar. The total heat transfer area is 10.23 m^2 and it is made from stainless steel. The total cost of purchase is $122,832. The heat duty of this exchanger is 31,720 cal/s, the average heat transfer coefficient is 0.02 cal/s-cm2-K, and the LMTD is 15.27°C. The amount of cooling water needed is 2,432 kg/hr.

Heat Exchanger, HEAT5

This unit is a shell and tube heat exchanger, is used to cool the bottoms from COL2, S-BUTANOL. S-BUTANOL is cooled from 138°C to 25°C, using countercurrent heat transfer. The chilled water in S-25 is heated to 99.6°C from 12°C; even though this water is likely mostly

steam, it can be sent back to the cooling tower to be re-cooled. The operating pressure is 1 bar, and the total heat transfer area is 95.07 m^2. The exchanger is made of stainless steel, and the cost of purchase is $167,024. The heat duty is 203,953 cal/s, the average heat transfer coefficient is 0.02 cal/s-cm2-K, and the LMTD is 10.57°C. The amount of cooling water needed is 5,315 kg/hr.

Distillation Column, DISTILL-3, COL3 (507T)

This unit is a distillation column that is used to separation acetone from the other components in S-AEW2. It is more successful at separating acetone from ethanol than from water due to the acetone-water azeotrope. It was modeled using RADFRAC in ASPEN. The bottoms stream is water and ethanol, S-W-ETH, the liquid distillate contains the acetone, S-ACETONE; the vapor distillate is S-CO23. The column has 16 theoretical stages and, assuming 60% efficiency, 27 actual stages. The feed, SAEW2, enters on theoretical stage 8. The operating pressure is 2 bar, the reflux ratio is 3, the vapor distillate fraction is 0.1, and the molar distillate rate is 22 kmol/hr. The top stage temperature is 72.4°C. The distillate contains 77 mol% of the entering acetone, and the bottoms stream contains 96 mol% of the entering ethanol and 89 mol% of the entering water. The column height is 12.3 m, the diameter is 0.62 m and the column has a volume of 3.73 m^3. The reboiler duty is 228,054 cal/s and the condenser duty is -181,871 cal/s. The column is made out of 304-grade stainless steel and would cost $168,000 if it had to be purchased; however, this column already exists in the purchased ethanol plant. It uses 1,530,379 kWh/yr of electricity.

Liquid-Liquid Extractor, EXTRACT-2, LLE2

This unit is to again separate water from the organic products. In this case, it is used to overcome the acetone water azeotrope, so that the acetone can be purified for sale. The solvent stream is S-MESITYLE, and this streams function is separating the organics in the S-ACETONE stream. The organic rich stream out of this column is S-MESACETO and the water rich stream is S-WATER. The operating conditions at the top of the column are 1 bar and 25°C. This column has 3 theoretical stages and 21 actual stages; again a Karr column could be used to increase the efficiency. The total height of the column is 2.61 m and it has a diameter of 1.43 m, giving a total volume of 4.19 m^{3}, which allows for a working volume of 85%. It is constructed from low-alloy steel, and the total cost, including trays, is $205,000.

Distillation Column, DISTILL-4, COL4

This unit is a distillation column, modeled with RADFRAC, that is used to separate acetone from the solvent, mesitylene. The acetone, stream S-ACETONE2, is the distillate and the solvent, S-MESITYL2 makes up the bottoms. There is no vapor distillate for this column. The column has 10 theoretical stages and, assuming 60% efficiency, 17 actual stages. The feed, S-MESCATO, enters on theoretical stage 5. The operating pressure is 1 bar, the reflux ratio is 2, and the molar distillate rate is 18 kmol/hr. The top stage temperature is 49.4°C. The distillate contains 97 mol% of the entering acetone and the bottoms product contains nearly 100 mol% of the solvent. The column height is 10.4 m and its diameter is 0.305 m. The reboiler duty is 435,969 cal/s and the condenser duty is -115,155 cal/s. This column did not already exist in the ethanol plant. As such, it will be made of carbon steel and the price of its purchase will be $129,800. It uses 10,630,903 kWh/yr of electricity.

Heat Exchanger, HEAT6

This unit is a shell and tube heat exchanger that uses countercurrent heat transfer to cool the acetone product, S-ACETONE2. This stream is cooled from 48.1°C to 25°C, using the chilled water stream S-28, which is heated from 12°C to 35°C. The pressure of this exchanger is 1 bar, and it has a total heat transfer area of 1.29 m^2. The exchanger is made of stainless steel and cost $165,278. The heat duty is 3403 cal/s, the average heat transfer coefficient is 0.02 cal/s-cm2-K, and the LMTD is 12.98°C. The amount of cooling water needed is 540 kg/hr.

Heat Exchanger, HEAT7

This unit is a shell and tube heat exchanger. It cools recycled water, with some ethanol, in stream S-W-ETH from 99.9°C to 30°C. Since at this temperature S-W-ETH will likely be in the vapor phase, which will not affect recycling as this stream will then be cooled down so it is in the liquid phase. The chilled water stream, S-29, is heated from 12°C to 84.3°C. The operating pressure is 1 bar. The exchanger has a total heat transfer area of 8.59 m^2. The exchanger is made of stainless steel and costs $114,681 to purchase. The heat duty is 29,260 cal/s, the average heat transfer coefficient is 0.02 cal/s-cm2-K, and the LMTD is 16.78°C. The amount of cooling water needed is 1,441 kg/hr.

Heat Exchanger, HEAT8

This unit is a shell and tube heat exchanger that cools the recycled solvent from LLE2. The solvent is cooled from 162°C to 25°C. S-31, the chilled water stream, is heated from 12°C to 99.6°C; even though this water is likely mostly steam it can still be sent back to the cooling tower to be re-cooled. The operating pressure is 1 bar. The exchanger has a total heat transfer

area of 130.58 m^2. The exchanger is made of stainless steel and cost $190,834. The heat duty is 324,209 cal/s, the average heat transfer coefficient is 0.02 cal/s-cm2-K, and the LMTD is 12.23°C. The amount of cooling water needed is 6,666 kg/hr.

Activated Carbon Adsorbers, ADSORB-1, AC-A-B

The two activated carbon adsorbers are used to remove trace organics from the recycled water. The organics, butanol, acetone, ethanol, and acetic acid, amount for less than 1% of the total water recycled stream, S-RECWATER; the other organic, butyric acid is not present in a significant concentration in the recycled water stream. Each adsorber will be able to operate continuously for a month, and then the recycled water stream will be directed to the other adsorber. The adsorbers are being purchased from a company called Carbtrol, and are model HP-6500. They have a design flow of 96.5 m^3/hr. The pressure drop at design flow is 0.1 bar. 1179 kg of liquid phase activated carbon (8 x 20 mesh, high activity, type CL) is required for each adsorber. The adsorbers are cylindrical and are constructed from a fiberglass filament wound tank with external UV stabilized clear coat, Sch. 80 PVC internal piping, and stainless hardware. The max working pressure is 3.65 bar. Both the tank diameter and height are 2.51 m. Each adsorber will cost $54,000 and the operating cost of changing the carbon is $12,000 and will need to be done once a year for each adsorber yielding a variable cost of $24,050/year for this unit. Detailed equipment data sheets are included in Appendix C.

Water Holding Tank 1, 317V

This unit is a tank made of 304-grade stainless steel that will store water and replenish water lost in DDGS processing. This tank has a diameter of 1.95 m and a height of 5.86 m. It has a total volume of 17.57 m^3 and cost $84,000 to purchase.

Water Holding Tank 2, 319V

This unit is a tank made of carbon steel that will store water and replenish water lost in DDGS processing. This tank has a diameter of 2.52 m and a height of 3.78 m. It has a total volume of 18.87 m^3 and cost $19,000 to purchase.

Water Holding Tank 3, 321V

This unit is a tank made of 316-grade stainless steel that will store water and replenish water lost in the ABE separation process; S-127 is the inlet stream. This tank has a diameter of 3.54 m and a height of 5.31 m. It has a total volume of 52.13 m^3 and cost $103,000 to purchase.

Acetone Storage Tank, 511V

This unit is a tank made of 304-grade stainless steel that will store the acetone for approximately 12 days before it is shipped to buyers. S-ACEPROD feeds into the tank. Due to the high volatility and flammability of acetone, this tank needs to be kept slightly above atmospheric pressure at 1.01 bar. It has a diameter 6.74 m, a height of 13.48 m and a volume of 481.39 m^3. It cost $93,000 to purchase.

Mesitylene Holding Tank, 608T

This unit is a tank fed into S-SOLVADD1 and S-SOLVADD2 that replenishes the mesitylene that is purged throughout the process. It is large enough to store a week supply of mesitylene, which is much less volatile and more stable than acetone. It is made of carbon steel, has a diameter of 5.91 m, a height of 17.72 m and a volume of 485.54 m^3. It cost $96,000 to purchase.

Butanol Holding Tank, 513V

This unit is a holding tank for the butanol produced in S-BUTPROD. It can hold up to 12 days of continuously produced butanol. It is made of 304-grade stainless steel, has a diameter of 11.29 m, a height of 33.88 m and a volume of 3,392,22 m^3. It cost $308,000 to purchase. Due to the flammability of butanol, it will be kept at a pressure slightly above atmospheric, 1.01 bar.

DDGS Separation: Process Description

After fermentation, the solids that are not converted by the fermentation process are processed into distillers' dried grains with solubles (DDGS). The process flow diagram and material balance are presented in Figures 13 and 14, respectively. Once separated and dried, DDGS is sold as livestock feed or as a feed supplement, and is an important co-product of the butanol production process. In this process, "solids" includes non-starch poly, oil, other solids, protein – insoluble, protein – soluble, the dead bacteria, and the nutrients. After fermentation, the solids and liquids exiting the fermenter in stream S-141 are sent through a rotary drum filter, RD1, which separates the majority of the liquids, which are sent to ABE Separation, and the solids (with some liquid), which are sent to DDGS Separation. S-147 is the stream that is fed to the DDGS separation train. It contains the solids with water and small, but not insignificant,

amounts of acetone, butanol, and ethanol (these organics are not lost product, however, as discussed later in this section). This stream exits the rotary drum filter at 115.3°C and 1.01 bar. It is pumped continuously in PUMP-1, 502P. This centrifugal pump uses 37.29 kW of power to increase the pressure of the stream from 1.01 bar to 4.46 bar isothermally, as specified by the original ethanol plant process description. The pump has a 70% pumping efficiency. The higher pressure stream, referred to as "whole stillage", is then fed to a blending tank, STORE-1, 607V. The whole stillage is mixed and stored in the tank, which is 15.67 m in height and 7.83 m in diameter. It has a total volume of 755.4 m^3, with a working volume of 679.9 m^3. While being stored, the whole stillage drops in temperature in pressure to 93°C and 1.00 bar, respectively.

When the whole stillage exits the tank, it is pumped to increase its pressure back to 4.45 bar. Again, this pressure change was specified by the original ethanol plant process description as a necessary pressure increase. This pressure change is done by sending the whole stillage stream through centrifugal pump, PUMP-1, 602P. This pump is identical in specifications as the previous one, 601P. The first step in obtaining dried solids and removing the trace organics and most of the water occurs in CENTRIFUGE-1, 603C. This unit is a disk-stack centrifuge that has a rated throughput of 1,735.13 L/min and a 30% operating efficiency. The centrifuge spins the whole stillage at a high enough speed to separate it into three main phases, which are fed into three separate streams. The first stream, S-196, is mainly water, but contains trace amounts of solids and organics. This stream is recycled to the liquefaction section of the process. The trace amounts of solids and organics that are added to the corn with this water have insignificant effects on liquefaction and fermentation. The second stream, S-176, is referred to as "thin stillage", which has a higher percentage of solids to water than S-196. This stream contains solids, trace organics, and water and is further processed to recover the solids for DDGS. The

third stream that exits the centrifuge, S-181, has the highest ratio of solids to water and contains no organics, considered wet DDGS. All three streams exit the centrifuge at 93.6°C and 4.45 bar, which are the operating conditions typically used in a corn ethanol plant. The thin stillage, S-176, is fed to a blending tank, STORE-1, 605V, that mixes the feed. Like before, while in the tank, the contents drop in pressure to 1.00 bar.

After exiting the tank, the stream, S-101, is pumped back up to 4.45 bar through PUMP-1, 606P. This stream is smaller than before and thus requires a smaller pump. This centrifugal pump operates continuously and uses a power of 14.9 kW with a 70% pumping efficiency. The thin stillage is fed to an evaporator, EVAPORATE-1, 607Ev. The evaporator dries the thin stillage so that more of the solids can be recovered and added to the total yield of DDGS, the majority of which comes from S-181. The evaporated water and organics are added to S-196, to be recycled back into the process. The evaporator has four effects, each with a heat transfer area of 664.2 m^2 and heat transfer coefficient of 2400 kcal/m^2-h-°C. It evaporates 81.50% of the water and nearly 100% of the organics from the stream. The water vapor and organic vapor stream exit the evaporator at 79°C and combine with S-196. The resulting solids stream, considered wet DDGS, S-172, also at 79°C, exits the evaporator and combine to be combined with the wet DDGS, originally from S-181. After exiting the centrifuge, the wet DDGS in S-181, is transferred on CONVEY-1, 604MH, a belt conveyor to where it combines with the wet DDGS from the thin stillage that went through the evaporator, EVAPORATE-1, 607Ev. The conveyor has a rated throughput of 24.16 MT/h and a specific loading rate of 2.00 MT/h-cm. It is 100 m long and 12 cm wide.

Once the wet DDGS from the thin stillage and the wet DDGS from the centrifuge combine, the stream is sent to DRY-1, 610D. This is a rotary dryer that does a final drying of the

wet DDGS. The drum of the dryer has a diameter of 3.98 m and a length of 99.53 m. The dryer removes 94.7% of the moisture from the wet DDGS to produce the DDGS that is ready for selling. A belt conveyor, CONVEY-1, 612MH, transports the DDGS to the end of the DDGS processing train. The conveyor has a rated throughput of 15.30 MT/h and specific loading rate of 2.00 MT/h-cm. It is 100 m in length and 8 cm in width. The DDGS is stored until pickup in 509V.

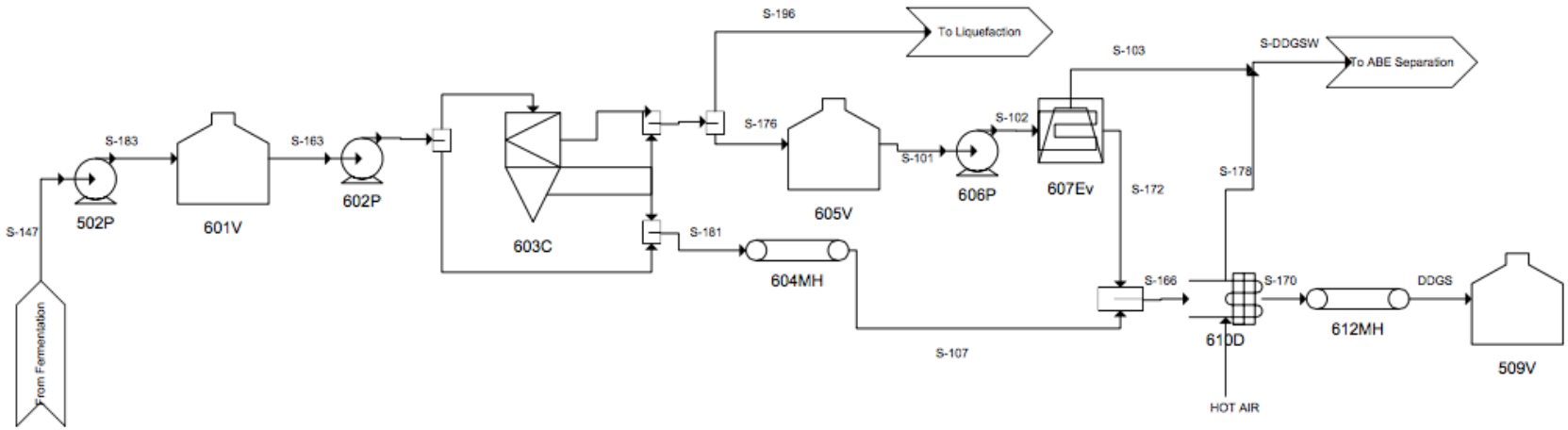

Figure 13. Process flow diagram of the DDGS separation section. This section utilizes the equipment from the original corn ethanol plat. Solids from fermentation are centrifuged and dried in an evaporator and hot air dry to remove excess liquid. The liquids removed from the DDGS are recycled to various parts of the plant. The DDGS product is stored until pickup.

Stream ID	Molc. Weight (g/gmol)	S-183	S-162	S-163	S-181	S-107	S-176	S-101	S-102	S-103	S-172	S-166	HOT AIR	S-178	S-DDGSW	S-170	DDGS
Temperature (C)		115.33	93.00	93.04	93.60	93.60	93.65	93.71	93.74	79.00	79.00	87.69	104.00	70.00	73.90	70.00	70.00
Pressure (bar)		4.46	4.46	1.00	4.45	4.45	4.45	1.00	4.45	1.01	1.01	1.01	1.01	1.01	1.01	1.01	1.01
Total Mass Flow (kg/h)		49284.33	49284.33	49284.33	21545.04	21545.04	20308.17	20308.17	20308.17	12181.12	8127.05	29672.09	9281.21	15908.57	28089.69	23044.73	23044.73
Total Mole Flow (kmol/h)		1538.45	1538.45	1538.45	336.37	336.37	880.05	880.05	880.05	675.64	204.41	540.78	321.64	689.42	1365.06	173.00	173.00
Component Flow (kg/h)																	
Non-starch Poly	162.02	3291.50	3291.50	3291.50	3028.18	3028.18	192.78	192.78	192.78	0.00	192.78	3220.95	0.00	0.00	0.00	3220.95	3220.95
Oil	18.02	1724.07	1724.07	1724.07	1153.44	1153.44	417.76	417.76	417.76	0.00	417.76	1571.20	0.00	0.00	0.00	1571.20	1571.20
Other Solids	180.16	5040.75	5040.75	5040.75	864.73	864.73	3057.27	3057.27	3057.27	0.00	3057.27	3922.00	0.00	0.00	0.00	3922.00	3922.00
Protein - insoluble	180.16	2328.13	2328.13	2328.13	2141.88	2141.88	136.35	136.35	136.35	0.00	136.35	2278.23	0.00	0.00	0.00	2278.23	2278.23
Protein - soluble	180.16	2561.33	2561.33	2561.33	439.39	439.39	1553.47	1553.47	1553.47	0.00	1553.47	1992.87	0.00	0.00	0.00	1992.87	1992.87
Starch	162.00	0.00	0.00	0.00	0.00	0.00	0.00	0.00	0.00	0.00	0.00	0.00	0.00	0.00	0.00	0.00	0.00
Water	18.02	24636.77	24636.77	24636.77	4226.44	4226.44	14942.45	14942.45	14942.45	12173.03	2769.42	6995.86	0.00	6627.36	18800.39	368.50	368.50
Carbon dioxide (CO2)	44.01	0.00	0.00	0.00	0.00	0.00	0.00	0.00	0.00	0.00	0.00	0.00	0.00	0.00	0.00	0.00	0.00
Ethanol	46.07	0.15	0.15	0.15	0.00	0.00	0.11	0.11	0.11	0.11	0.00	0.00	0.00	0.00	0.11	0.00	0.00
Acetone	58.08	1.60	1.60	1.60	0.00	0.00	1.20	1.20	1.20	1.20	0.00	0.00	0.00	0.00	1.20	0.00	0.00
Butanol	74.12	9.04	9.04	9.04	0.00	0.00	6.78	6.78	6.78	6.78	0.00	0.00	0.00	0.00	6.78	0.00	0.00
Nitrogen	28.02	0.00	0.00	0.00	0.00	0.00	0.00	0.00	0.00	0.00	0.00	0.00	7119.78	7119.78	7119.78	0.00	0.00
Glucose	180.16	0.00	0.00	0.00	0.00	0.00	0.00	0.00	0.00	0.00	0.00	0.00	0.00	0.00	0.00	0.00	0.00
Clostridia bacteria	n/a	321.93	321.93	321.93	321.93	321.93	0.00	0.00	0.00	0.00	0.00	321.93	0.00	0.00	0.00	321.93	321.93
Nutrients	n/a	9369.06	9369.06	9369.06	9369.06	9369.06	0.00	0.00	0.00	0.00	0.00	9369.06	0.00	0.00	0.00	9369.06	9369.06
Acetic Acid	60.05	0.00	0.00	0.00	0.00	0.00	0.00	0.00	0.00	0.00	0.00	0.00	0.00	0.00	0.00	0.00	0.00
Butyric Acid	88.11	0.00	0.00	0.00	0.00	0.00	0.00	0.00	0.00	0.00	0.00	0.00	0.00	0.00	0.00	0.00	0.00
Oxygen	32.00	0.00	0.00	0.00	0.00	0.00	0.00	0.00	0.00	0.00	0.00	0.00	2161.43	2161.43	2161.43	0.00	0.00
Hydrogen	2.00	0.00	0.00	0.00	0.00	0.00	0.00	0.00	0.00	0.00	0.00	0.00	0.00	0.00	0.00	0.00	0.00
Mesitylene	120.19	0.00	0.00	0.00	0.00	0.00	0.00	0.00	0.00	0.00	0.00	0.00	0.00	0.00	0.00	0.00	0.00

Figure 14. Material balance containing all the streams in the DDGS separation section of the process, continued.

DDGS Separation: Equipment Descriptions

Solids Pump, PUMP-1, 502P

This unit is used to pump the solids (corn waste) from the filter to the whole stillage tank. It operates continuously and uses a power of 37.3 kW. S-147 flows into the pump at a pressure of 1.01 bar and leaves the pump as S-183 with a pressure of 4.46 bar. The unit is a centrifugal pump with a 70% pumping efficiency and a pressure head of 3.45 bar. It is made out of 316-grade stainless steel and was originally purchased for $12,800. It uses 295,297 kWh/year of electricity.

Whole Stillage Tank, STORE-1, 601V

This unit is a blending tank used to blend and store the whole stillage before it is fed to the centrifuge. It is designed at a design pressure of 1.52 bar, a diameter of 7.83 m, a height of 15.7 m, and a volume of 755.41 m^3. The tank has a working volume to vessel volume ratio of 90% and a final temperature and pressure of 93°C and 1.00 bar. It is made out of 304-grade stainless steel and was originally purchased for $197,000. It uses 11,866 kWh/yr of electricity.

Whole Stillage Pump, PUMP-1, 602P

This unit is used to pump the contents of the whole stillage tank to the centrifuge. It operates continuously and uses a power of 37.29 kW. S-163 flows into the pump at a pressure of 1.00 bar and leaves the pump as three different streams, S-196, S-176, and S-181, all at pressures of 4.45 bar. The unit is a centrifugal pump with a 70% pumping efficiency and a pressure head of 3.45 bar. It is made out of 316-grade stainless steel and was originally purchased for $12,800. It uses 295,297 kWh/yr of electricity.

Disk-Stack Centrifuge Filtering Unit, CENTRIFUGE-1, 603C

This unit is designed to separate the remaining liquid from the solids that are to be made into DDGS. It has a rated throughput of this centrifuge is 1,735.13 L/min and a 30% operating efficiency. It is made out of 316-grade stainless steel and was originally purchased for $852,000. It uses 321,640 kWh/yr of electricity.

Thin Stillage Tank, STORE-1, 605V

This unit is a blending tank used to blend and store the thin stillage before it is fed to the evaporator. It is designed at a design pressure of 1.52 bar, a diameter of 5.89 m, a height of 17.7 m, and a volume of 481.4 m^3. The tank has a working volume to vessel volume ratio of 90% and a final temperature and pressure of 93.7°C and 1.00 bar. It is made out of 304-grade stainless steel and was originally purchased for $230,000. It uses 9,722 kWh/yr of electricity.

Thin Stillage Pump, PUMP-1, 606P

This unit is used to pump the contents of the thin stillage tank to the evaporator. It operates continuously and uses a power of 14.9 kW. S-101 flows into the pump at a pressure of 1.00 bar and leaves the pump as S-102 at a pressure of 4.45 bar. The unit is a centrifugal pump with a 70% pumping efficiency and a pressure head of 3.45 bar. It is made out 316-grade stainless steel and was originally purchased for $10,600. It uses 118,119 kWh/yr of electricity.

Evaporator, EVAPORATE-1, 607Ev

This unit is designed to evaporate water from the thin stillage to dry it further. S-102 flows into the evaporator at 93.7°C and exits as two streams, S-103 containing the majority of the water (as vapor) at 79°C and S-172 containing the remaining thin stillage for further processing also at 79°C. It has a heat transfer area per effect of 664.2 m^2 and has four effects, each with a heat transfer coefficient of 2400 kcal/m^2-h-C. It is made out of 304-grade stainless steel. It was originally purchased for $3,415,000. It uses 1,496,000 kWh/yr of electricity.

Wet DDGS Conveyor, CONVEY-1, 604MH

This unit is a belt conveyor designed to transport the thick whole stillage to where it mixes with the thick solid remnants of the thin stillage. It has a rated throughput of 24.16 MT/h, a specific loading rate of 2.00 MT/h-cm, a width of 12.08 cm, and a length of 100.00 m. It is made out of carbon steel and was originally purchased for $55,700. It uses 32,663 kWh/yr of electricity.

DDGS Dryer, DRY-1, 610D

This unit is a rotary dryer designed to do the final drying of the wet DDGS in DDGS processing. It has a drum diameter of 3.98 m and drum length of 99.53 m. It has a drying capacity of 24,776.4 kg/h and 94.73% of the liquids are dried out of the wet DDGS. The wet DDGS enters as S-166 at 87.7°C and the dry DDGS exits as S-170 at 70°C. It is made out of 304-grade stainless steel. It was originally purchased for $2,278,000. It uses 2,358,684 kWh/yr of electricity.

DDGS Handling, CONVEY-1, 612MH

This unit is a belt conveyor that transports the dry DDGS to the end of DDGS processing line where it is stored until pickup. It has a rated throughput of 15.30 MT/h, a specific loading rate of 2.00 MT/h-cm, a belt width of 0.08 m, and a belt length of 100.00 m. It is made out of carbon steel and cost $122,800 to purchase. It uses 93,001 kWh/yr of electricity.

Unit Specification Sheets

Distillation Column		
Identification:	Item	Distillation Column
	Item No.	COL4
	No. Required	1
Function:	Separates the solvent from the acetone and remaining water	
Operation:	Continuous	
Type:	N/A	
Design Data:	Material of Construction	Carbon Steel
	Vessel Diameter (m)	0.31
	Vessel Height (m)	10.4
	Final Working Volume (m^3)	0.76
	Operating Pressure (bar)	1
	Number of Actual Stages	17
	Number of Theoretical Stages	10
	Reflux Ratio	2
	Molar Distillate Rate (kmol/hr)	18
	Top Stage Temperature (^oC)	49.4
	Reboiler Duty (cal/s)	435,969
	Condenser Duty (cal/s)	-115,155
	Feed Stage (actual)	14
Purchase Cost		$31,193
Bare Module Cost		$196,751
Cost of Utilities/year		$744,163
Total Bare Module Cost		$196,751
Comments: Number of actual stages was calculated assuming 60% efficiency		

Liquid-Liquid Extractor			
Identification:	Item		Liquid-liquid Extractor
	Item No.		LLE1
	No. Required		1
Function:	Used to reduce the amount of water in the heated broth		
Operation:	Continuous		
Type:	N/A		
Design Data:	Material of Construction		Low-Alloy Steel (SA-387B)
	Vessel Diameter (m)		3.45
	Vessel Height (m)		24
	Final Working Volume (m^3)		225
	Operating Pressure (bar)		1
	Operating Temperature (^oC)		25
	Number of Actual Trays		70
	Number of Theoretical Trays		10
Purchase Cost			$445,542
Bare Module Cost			$1,853,454
Associated Costs			$0.00
Total Bare Module Cost			$1,853,454
Comments: The number of actual trays is determined by 7 times the theoretical because of the low efficiency of liquid-liquid extraction			

Liquid-Liquid Extractor		
Identification:	Item	Liquid-liquid Extractor
	Item No.	LLE2
	No. Required	1
Function:	Used to reduce the amount of water in the acetone stream	
Operation:	Continuous	
Type:	N/A	
Design Data:	Material of Construction	Low-Alloy Steel (SA-387B)
	Vessel Diameter (m)	1.43
	Vessel Height (m)	2.61
	Final Working Volume (m^3)	4.19
	Operating Pressure (bar)	1
	Operating Temperature (^oC)	25
	Number of Actual Trays	21
	Number of Theoretical Trays	3
Purchase Cost		$49,289
Bare Module Cost		$205,042
Associated Costs		$0.00
Total Bare Module Cost		$205,042
Comments: The number of actual trays is determined by 7 times the theoretical because of the low efficiency of liquid-liquid extraction		

Heat Exchanger

Identification:	Item	Heat Exchanger
	Item No.	HEAT1
	No. Required	1
Function:	Cooling the extract from LLE1 before it enters COL1	
Operation:	Continuous	
Type:	Floating head, Shell and Tube	

Stream ID	**Tube Side**	**Shell Side**
Stream In	S-EXTRACT	S21
Stream Out	S-COOLEXTRACT	S20
Flowrate (kmol/hr)	1854.03	2080
Inlet Temperature (^{0}C)	69.3	12
Outlet Temperature (^{0}C)	50.0	59.1

Design Data:	Material of Construction	Stainless-steel
	Surface Area ($m^{2)}$	120.47
	LMTD (^{o}C)	21.09
	Heat Duty (cal/s)	515,906
Cost of utilities/year		$260,383
Purchase Cost		$19,412
Bare Module Cost		$192,182
Total Bare Module Cost		$192,182
Comments:		

Heat Exchanger			
Identification:	Item Item No. No. Required		Heat Exchanger HEAT2 1
Function:	Cooling the solvent from COL1 before it is recycled back into LLE1		
Operation:	Continuous		
Type:	Floating head, Shell and Tube		
Stream ID **Stream In** **Stream Out** **Flowrate (kmol/hr)** **Inlet Temperature (^{0}C)** **Outlet Temperature (^{0}C)**	**Tube Side** S-SOLVREC2 S-SOLVENT2 1669.03 192.8 25		**Shell Side** S18 S19 5000 12 99.6
Design Data:	Material of Construction Surface Area (m$^{2)}$ LMTD (^{o}C) Heat Duty (cal/s)		Stainless-steel 1004 22.37 4,561,010
Cost of utilities/year			$2,219,936
Purchase Cost **Bare Module Cost**			$107,444 $672,377
Total Bare Module Cost			$672,377
Comments:			

Heat Exchanger

Identification:	Item	Heat Exchanger
	Item No.	HEAT3
	No. Required	1
Function:	Cooling stream AEBW as it comes out of COL1 before it enters COL2	
Operation:	Continuous	
Type:	Floating head, Shell and Tube	
Stream ID	**Tube Side**	**Shell Side**
Stream In	S-AEBW	S17
Stream Out	S-AEBW2	S16
Flowrate (kmol/hr)	175.75	470
Inlet Temperature (^{0}C)	63.3	12
Outlet Temperature (^{0}C)	30	52.6
Design Data:	Material of Construction	Stainless-steel
	Surface Area ($m^{2)}$	35.42
	LMTD (^{o}C)	14
	Heat Duty (cal/s)	100,724
Cost of utilities/year		$51,131
Purchase Cost		$20,131
Bare Module Cost		$139,262
Total Bare Module Cost		$136,262
Comments:		

Heat Exchanger			
Identification:	Item Item No. No. Required		Heat Exchanger HEAT4 1
Function:	Cooling stream AEW before it enters COL3		
Operation:	Continuous		
Type:	Floating head, Shell and Tube		
Stream ID **Stream In** **Stream Out** **Flowrate (kmol/hr)** **Inlet Temperature (^{0}C)** **Outlet Temperature (^{0}C)**	**Tube Side** S-AEW S22 56.25 72 30	**Shell Side** S24 S23 120 12 59.2	
Design Data:	Material of Construction Surface Area ($m^{2)}$ LMTD (^{o}C) Heat Duty (cal/s)		Stainless-steel 10.23 15.27 31,720
Cost of utilities/year			$17,028
Purchase Cost **Bare Module Cost**			$18,054 $122.832
Total Bare Module Cost			$122,832
Comments:			

Heat Exchanger

Identification:	Item	Heat Exchanger
	Item No.	HEAT5
	No. Required	1
Function:	Cooling the butanol product stream as it exits from COL2	
Operation:	Continuous	
Type:	Floating head, Shell and Tube	

Stream ID	**Tube Side**	**Shell Side**
Stream In	S-BUTANOL	S25
Stream Out	S-BUTPROD	S26
Flowrate (kmol/hr)	113.25	295
Inlet Temperature (^{0}C)	138	12
Outlet Temperature (^{0}C)	25	99.6

Design Data:	Material of Construction	Stainless-steel
	Surface Area ($m^{2)}$	95.07
	LMTD (^{o}C)	10.57
	Heat Duty (cal/s)	203,953
Cost of utilities/year		$607
Purchase Cost		$26,764
Bare Module Cost		$167,024
Total Bare Module Cost		$167,024
Comments:		

Heat Exchanger

Identification:	Item		Heat Exchanger
	Item No.		HEAT6
	No. Required		1
Function:	Cooling the acetone product stream as it exits COL4		
Operation:	Continuous		
Type:	Floating head, Shell and Tube		
Stream ID	**Tube Side**	**Shell Side**	
Stream In	S-ACETONE2	S26	
Stream Out	S-ACEPROD	S27	
Flowrate (kmol/hr)	18	25	
Inlet Temperature (^{0}C)	48.1	12	
Outlet Temperature (^{0}C)	25	35.1	
Design Data:	Material of Construction		Stainless-steel
	Surface Area ($m^{2)}$		1.29
	LMTD (^{o}C)		12.98
	Heat Duty (cal/s)		3,403
Cost of utilities/year			$1,948
Purchase Cost			$27,921
Bare Module Cost			$165,278
Total Bare Module Cost			$165,278
Comments:			

Heat Exchanger

Identification:	Item	Heat Exchanger
	Item No.	HEAT7
	No. Required	1
Function:	Cooling the S-W-ETH stream so it can be recycled	
Operation:	Continuous	
Type:	Floating head, Shell and Tube	

Stream ID	**Tube Side**	**Shell Side**
Stream In	S-W-ETH	S29
Stream Out	S-W-ETH2	S30
Flowrate (kmol/hr)	34.25	70
Inlet Temperature (^{0}C)	99.9	12
Outlet Temperature (^{0}C)	30.0	84.3

Design Data:	Material of Construction	Stainless-steel
	Surface Area ($m^{2)}$	8.59
	LMTD (^{o}C)	16.78
	Heat Duty (cal/s)	29,260
Cost of utilities/year		$15,956
Purchase Cost		$18,181
Bare Module Cost		$114,681
Total Bare Module Cost		$114,681
Comments:		

Heat Exchanger

Identification:	Item	Heat Exchanger
	Item No.	HEAT8
	No. Required	1
Function:	Cooling the solvent in S-MESITYL3 so it can be recycled	
Operation:	Continuous	
Type:	Floating head, Shell and Tube	

Stream ID	**Tube Side**	**Shell Side**
Stream In	S-MESITYL3	S31
Stream Out	S-MESITYL	S32
Flowrate (kmol/hr)	150.5584	370
Inlet Temperature (^{0}C)	162	12
Outlet Temperature (^{0}C)	25	99.6

Design Data:	Material of Construction	Stainless-steel
	Surface Area ($m^{2)}$	130.58
	LMTD (^{o}C)	12.23
	Heat Duty (cal/s)	324,209
Cost of utilities/year		$154,704
Purchase Cost		$30,443
Bare Module Cost		$190,824
Total Bare Module Cost		$190,824
Comments:		

Fermenter

Identification:	Item	Fermenter
	Item No.	405V-E/F
	No. Required	2
Function:	Production of ABE from Clostridia	
Operation:	Continuous	
Type:	N/A	

	Inlet	**Outlet**
Temperature (^oC)	37	37
Composition (kg/hr)		
Butanol	2.26	
Acetone	0.4	9143.7
Ethanol	0.04	1891.8
Water	108,319.3	157.7
Non-starch Poly	3291.1	106,844.7
Oil	1724.1	3291.1
Other Solids	4525.4	1724.1
Protein-insoluble	2328.1	5040.8
Protein-soluble	27,495.95	2328.1
CO2	9369.1	2561.3
Nutrients	0	15,562.8
Clostridia Bacteria	0	9369.1
Acetic Acid	0	321.9
Butryic Acid	0	104.9
		253.5

Design Data:	Material of Construction	316-grade stainless-steel
	Final Working Volume (m^3)	2,613
	Pressure (bar)	1.01
	Dilution Rate (hr^{-1})	0.031
Cost of utilities/year		$33,664
Purchase Cost		$803,933
Bare Module Cost		$3,344,360
Total Bare Module Cost		$3,344,360

Comments: The fermenter is assumed to be continuous for three weeks

Rotary Drum Filter

Identification:	Item	Rotary Drum
	Item No.	RD-1
	No. Required	2
Function:	Used to filter out the solids from before the separation process	
Operation:	Continuous	
Type:	N/A	

	Inlet	**Outlet**
Temperature (^{o}C)	78.14	78.14
Composition (kg/hr)		
Non-starch poly	3291.5	3291.5
Oil	1724.1	1724.1
Other Solids	5040.8	5040.8
Protein-insoluble	2328.1	2328.1
Protein-soluble	2561.3	2561.3
Water	106,421.9	106,421.9
CO2	939.2	939.2
Ethanol	152.0	152.0
Acetone	1603.9	1603.9
Butanol	9039.2	9039.2
Clostridia Bacteria	321.9	321.9
Nutrients	9369.1	9369.1
Acetic Acid	104.3	104.3
Butyric Acid	252.8	252.8
Hydrogen	2.11	2.11

Design Data:	Material of Construction	A285C carbon steel plates
	Vessel Diameter (m)	1.13
	Vessel Height (m)	4.51
	Final Working Volume (m^3)	4.50
	Pressure (bar)	1
Purchase Cost		$87,280
Bare Module Cost		$218,200
Total Bare Module Cost		$218,200
Comments:		

Seed Fermenter		
Identification:	Item	Fermenter
	Item No.	SU-1
	No. Required	1
Function:	Vessel used in start up for the fermentation	
Operation:	Batch	
Type:	N/A	
Design Data:		
	Final Working Volume (mL)	60
	Pressure (bar)	1.01
	Incubation Time (hr)	21
	Incubation Temperature (^{o}C)	37
	Amount of spore added (g)	0.5
	Amount of medium added (mL)	10
Purchase Cost		$75,000
Bare Module Cost		$75,000
Total Bare Module Cost		$75,000
Comments:		

Seed Fermenter		
Identification:	Item	Fermenter
	Item No.	SU-2
	No. Required	1
Function:	Vessel used in start up for the fermentation	
Operation:	Batch	
Type:	N/A	
Design Data:		
	Final Working Volume (m^3)	150
	Pressure (bar)	1.01
	Incubation Time (hr)	21
	Incubation Temperature (^oC)	37
	Amount of previous contents added (mL)	5.0
	Amount of medium added (mL)	95
Purchase Cost		$75,000
Bare Module Cost		$75,000
Total Bare Module Cost		$75,000
Comments:		

Seed Fermenter		
Identification:	Item	Fermenter
	Item No.	SU-3
	No. Required	1
Function:	Vessel used in start up for the fermentation	
Operation:	Batch	
Type:	N/A	
Design Data:		
	Final Working Volume (mL)	1500
	Pressure (bar)	1.01
	Incubation Time (hr)	21
	Incubation Temperature (^{o}C)	37
	Amount of previous contents added (mL)	50
	Amount of medium added (mL)	950
Purchase Cost		$26,00
Bare Module Cost		$108,160
Total Bare Module Cost		$108,160
Comments:		

Seed Fermenter		
Identification:	Item	Fermenter
	Item No.	SU-4
	No. Required	1
Function:	Vessel used in start up for the fermentation	
Operation:	Batch	
Type:	N/A	
Design Data:		
	Final Working Volume (L)	15
	Pressure (bar)	1.01
	Incubation Time (hr)	21
	Incubation Temperature (^{o}C)	37
	Amount of previous contents added (mL)	500
	Amount of medium added (L)	9.5
Purchase Cost		$112,000
Bare Module Cost		$465,920
Total Bare Module Cost		$465,920
Comments:		

Seed Fermenter		
Identification:	Item	Fermenter
	Item No.	SU-5
	No. Required	1
Function:	Vessel used in start up for the fermentation	
Operation:	Batch	
Type:	N/A	
Design Data:		
	Final Working Volume (L)	150
	Pressure (bar)	1.01
	Incubation Time (hr)	21
	Incubation Temperature (^{o}C)	37
	Amount of previous contents added (L)	5
	Amount of medium added (L)	95
Purchase Cost		$290,000
Bare Module Cost		$1,206,400
Total Bare Module Cost		$1,206,400
Comments:		

Seed Fermenter			
Identification:	Item		Fermenter
	Item No.		SU-6
	No. Required		1
Function:	Vessel used in start up for the fermentation		
Operation:	Batch		
Type:	N/A		
Design Data:			
	Final Working Volume (L)		1,500
	Pressure (bar)		1.01
	Incubation Time (hr)		21
	Incubation Temperature (^{o}C)		37
	Amount of previous contents added (L)		50
	Amount of medium added (L)		950
Purchase Cost			$630,000
Bare Module Cost			$2,620,800
Total Bare Module Cost			$2,620,800
Comments:			

Seed Fermenter			
Identification:	Item		Fermenter
	Item No.		SU-7
	No. Required		1
Function:	Vessel used in start up for the fermentation		
Operation:	Batch		
Type:	N/A		
Design Data:			
	Final Working Volume (L)		15,000
	Pressure (bar)		1.01
	Incubation Time (hr)		21
	Incubation Temperature (^{o}C)		37
	Amount of previous contents added (L)		500
	Amount of medium added (L)		9,500
Purchase Cost			$639,991
Bare Module Cost			$2,662,364
Total Bare Module Cost			$2,662,364
Comments:			

Seed Fermenter		
Identification:	Item	Fermenter
	Item No.	SU-8
	No. Required	1
Function:	Vessel used in start up for the fermentation	
Operation:	Batch	
Type:	N/A	
Design Data:		
	Final Working Volume (L)	150,000
	Pressure (bar)	1.01
	Incubation Time (hr)	21
	Incubation Temperature (^{o}C)	37
	Amount of previous contents added (L)	5,000
	Amount of medium added (L)	95,000
Purchase Cost		$639,991
Bare Module Cost		$2,662,364
Total Bare Module Cost		$2,662,364
Comments:		

Seed Fermenter		
Identification:	Item	Fermenter
	Item No.	SU-9
	No. Required	1
Function:	Vessel used in start up for the fermentation	
Operation:	Batch	
Type:	N/A	
Design Data:		
	Final Working Volume (L)	1,500,000
	Pressure (bar)	1.01
	Incubation Time (hr)	21
	Incubation Temperature (^{o}C)	37
	Amount of previous contents added (L)	50,000
	Amount of medium added (L)	950,000
Purchase Cost		$729,913
Bare Module Cost		$3,036,436
Total Bare Module Cost		$3,036,436
Comments:		

Activated Carbon Adsorbers

Identification:	Item	Activated Carbon Adsorber
	Item No.	AC-A/B
	No. Required	2
Function:	Separates the organics out of the recycled water	
Operation:	Continuous	
Type:	N/A	
Design Data:	Material of Construction	Stainless Steel
	Vessel Diameter (m)	2.51
	Vessel Height (m)	2.51
	Deisgn Flow ($m^{3/hr}$)	96.5
	Pressure drop at design flow (bar)	0.1
	Max Working Pressure (bar)	3.65
	Amount of Activated Carbon (kg)	1179
Purchase Cost		$54,000
Bare Module Cost		$54,000
Associated Costs		
Replacement Carbon per year Cost		$24,050
Total Bare Module Cost		$54,000

Comments:
It is continuous for a period of a month and then the water is switched to the other adsorber so it can be cleaned
The carbon will need to be changed once a year in each adsorber

Equipment List and Cost Summary

Unit Number	Type	Material of Construction	Capacity	Unit	Purchase Cost
102V	Silo	CS	18,540.00	m3	$ 979,000
101MH	Belt Conveyor	CS	100.00	m	$ 120,800
103MH	Splitter	CS	46,351.00	kg/hr	$ 61,000
104M	Grinder	CS	46,212.00	kg/hr	$ 98,000
105V	Receiver Tank	CS	77.00	m3	$ 33,000
106W	Hopper	CS	101.00	m3	$ 51,000
107V	Receiver Tank	CS	77.00	m3	$ 44,000
301V	Receiver Tank	SS304	12.19	m3	$ 50,000
302P	Gear Pump	SS316	0.20	kW	$ 4,000
303V	Receiver Tank	CS	8.77	m3	$ 28,000
304P	Gear Pump	SS316	0.19	kW	$ 4,000
305V	Hopper	CS	4.02	m3	$ 9,000
306P	Gear Pump	SS316	3.73	kW	$ 4,000
307V	Blending Tank	SS304	15.28	m3	$ 69,000
308P	Centrifugal Pump	SS316	3.55	kW	$ 25,300
HX101	Heat Exchanger	CS	98.85	m2	$ 23,000
310V	Blending Tank	SS304	141.43	m3	$ 161,000
311P	Centrifugal Pump	SS316	50.00	kW	$ 15,100
312E	Heat Exchanger	SS304	332.90	m2	$ 201,000
313E	Heat Exchanger	SS304	36.67	m2	$ 14,000
314V	Receiver Tank	SS304	14.16	m2	$ 174,000
315E	Heat Exchanger	CS	179.12	m2	$ 51,000
316E	Heat Exchanger	SS316	405.68	m2	$ 614,000
322P	Centrifugal Pump	SS316	11.18	kW	$ 15,000
401E	Heat Exchanger	SS304	197.97	m2	$ 285,000
413E	Heat Exchanger	SS304	232.86	m2	$ 331,000
402E	Heat Exchanger	SS304	190.14	m2	$ 85,000

407P	Centrifugal Pump	SS316	9.52	kW	$	14,900
405V-A	Fermenter	SS316	2,612.78	m3	$	703,000
405V-B	Fermenter	SS316	2,612.78	m3	$	703,000
405V-C	Fermenter	SS316	2,612.78	m3	$	703,000
405V-D	Fermenter	SS316	2,612.78	m3	$	703,000
405V-E	Fermenter	SS316	2,612.78	m3	$	3,344,360
405V-F	Fermenter	SS316	2,612.78	m3	$	3,344,360
RD-1	Rotary Drum Filter	A285C	4.50	m3	$	218,200
SU-1	Seed Fermenter	SS	60.00	mL	$	75,000
SU-2	Seed Fermenter	SS	150.00	mL	$	75,000
SU-3	Seed Fermenter	SS	1.50	L	$	108,160
SU-4	Seed Fermenter	SS	15.00	L	$	465,920
SU-5	Seed Fermenter	SS	150.00	L	$	1,206,400
SU-6	Seed Fermenter	SS	1,500.00	L	$	2,620,800
SU-7	Seed Fermenter	SS	15,000.00	L	$	2,624,956
SU-8	Seed Fermenter	SS	150,000.00	L	$	2,662,364
SU-9	Seed Fermenter	SS	1,500,000.00	L	$	3,036,436
LLE1	Liquid-Liquid Extractor	CS	224.59	m3	$	1,853,454
HEAT1	Heat Exchanger	SS	120.46	m2	$	192,182
411P	Centrifugal Pump	SS316	9.01	kW	$	16,100
501T	Distillation Column	SS304	96.61	m3	$	597,000
HEAT2	Heat Exchanger	SS	1,004.19	m2	$	672,377
HEAT3	Heat Exchanger	SS	35.42	m2	$	139,262
503T	Distillation Column	SS304	113.57	m3	$	168,200
318P	Gear Pump	SS316	0.13	kW	$	4,000
HEAT4	Heat Exchanger	SS	10.23	m2	$	122,832
HEAT5	Heat Exchanger	SS	95.07	m2	$	167,024
507T	Distillation Column	SS304	3.73	m3	$	168,000
LLE2	Liquid-Liquid Extractor	CS	3.56	m3	$	205,042

COL4	Distillation Column	CS	0.24	m3	$	129,764
HEAT6	Heat Exchanger	SS	1.29	m2	$	165,278
HEAT7	Heat Exchanger	SS	8.59	m2	$	114,681
HEAT8	Heat Exchanger	SS	130.58	m2	$	190,834
AC-A	Adsorber	SS	3.91	m3	$	124,955
AC-B	Adsorber	SS	3.91	m3	$	124,955
317V	Water Holding Tank	SS304	17.57	m3	$	84,000
319V	Water Holding Tank	CS	18.87	m3	$	19,000
321V	Water Holding Tank	SS316	52.13	m3	$	103,000
511V	Acetone Holding Tank	SS304	481.39	m3	$	93,000
608T	Mesitylene Holding Tank	CS	485.54	m3	$	96,000
513V	Butanol Holding Tank	SS304	3,392.22	m3	$	308,000
502P	Centrifugal Pump	SS316	37.29	kW	$	12,800
601V	Blending Tank	SS304	755.41	m3	$	197,000
602P	Centrifugal Pump	SS316	37.29	kW	$	12,800
603C	Disk-Stack Centrifuge	SS316	1,735.13	L/min	$	852,000
605V	Blending Tank	SS304	481.39	m3	$	230,000
606P	Centrifugal Pump	SS316	14.91	kW	$	10,600
607Ev	Evaporator	SS304	664.18	m2	$	3,415,000
604MH	Belt Conveyor	CS	100.00	m	$	55,700
610D	Rotary Dryer	SS304	1,244.73	m2	$	2,278,000
612MH	Belt Conveyor	CS	100.00	m	$	122,800
509V	DDGS Holding Tank	SS304	339.24	m3	$	34,000
	Total Cost of New Equipment				$	23,984,597

Table 5. Total equipment used in the entire corn butanol plant. Red equipment indicates new equipment, while black equipment is repurposed from the original corn ethanol plant.

Unit Name	Cp	Fbm	Associated Costs	Cbm	Quantity	Total Cbm
Fermentation						
RD1	$ 87,280	2.5	$ -	$ 218,200	1	$ 218,200
SU-1	$ 75,000	1	$ -	$ 75,000	1	$ 75,000
SU-2	$ 75,000	1	$ -	$ 75,000	1	$ 75,000
SU-3	$ 26,000	4.16	$ -	$ 108,160	1	$ 108,160
SU-4	$ 112,000	4.16	$ -	$ 465,920	1	$ 465,920
SU-5	$ 290,000	4.16	$ -	$ 1,206,400	1	$ 1,206,400
SU-6	$ 630,000	4.16	$ -	$ 2,620,800	1	$ 2,620,800
SU-7	$ 630,999	4.16	$ -	$ 2,624,956	1	$ 2,624,956
SU-8	$ 639,991	4.16	$ -	$ 2,662,364	1	$ 2,662,364
SU-9	$ 729,913	4.16	$ -	$ 3,036,436	1	$ 3,036,436
405V-E-F	$ 803,933	4.16	$ -	$ 3,344,360	2	$ 6,688,721
Subtotal			$ -			**$ 19,781,957**
Liquid-Liquid Extractors						
LLE1	$ 445,542	4.16	$ -	$ 1,853,454	1	$ 1,853,454
LLE2	$ 49,289	4.16	$ -	$ 205,042	1	$ 205,042
Subtotal						**$ 2,058,496**
Distillation Columns						
COL4	$ 31,193	4.16	$ -	$ 129,764	1	$ 129,764
Subtotal						**$ 129,764**
Heat Exchangers						
Heat1	$ 29,412	3.17	$ -	$ 192,182	1	$ 192,182
Heat2	$ 107,444	3.17	$ -	$ 672,377	1	$ 672,377
Heat3	$ 20,131	3.17	$ -	$ 139,262	1	$ 139,262
Heat4	$ 18,054	3.17	$ -	$ 122,832	1	$ 122,832
Heat5	$ 26,764	3.17	$ -	$ 167,024	1	$ 167,024
Heat6	$ 27,921	3.17	$ -	$ 165,278	1	$ 165,278
Heat7	$ 18,181	3.17	$ -	$ 114,681	1	$ 114,681
Heat8	$ 30,443	3.17	$ -	$ 190,834	1	$ 190,834
Subtotal						**$ 1,764,470**
Activated Carbon Adsorbers						
AC-A-B	$ 53,860	2.32	$ -	$ 124,955.20	2	$ 249,910
Subtotal						**$ 249,910**
Total						**$ 23,984,597**

Table 6. New equipment to be purchased. This table shows how the bare module cost of the new equipment was calculated using the purchase cost and bare module factor.

Energy Balance and Utility Requirements

The main utilities used in this process are cooling water in the fermentation and liquefaction processes, chilled water in the separation and liquefaction processes, steam in the liquefaction process and electricity for pumps, columns, vessels and other equipment throughout the process. The required electricity for the pumps was calculated based on the work required at 70% efficiency rather than for the maximum power they could provide. For the other equipment that already existed in the plant the amount of electricity needed for operation was found in the Itemized Cost Report (ICR) that was a part of the initial plant materials. The power requirement was determined by multiplying the number of days the plant runs by the electricity requirements in the utility reports of the ethanol plant.

The corn processing section uses no cooling water, chilled water, or steam; it only uses electricity. The total electricity needed to operate this section of the plant is $3,471,043 kWh/yr. This section was not modified from the existing ethanol plant, so the amount of electricity used was found directly from the ICR report.

The liquefaction was also mostly unchanged from the ethanol plant. Thus the utilities, chilled water, cooling water, and steam were taken from the existing utility sheets for this 40MM ethanol plant. The amount of chilled water used is 2.431×10^9 kg/yr, the amount of cooling water used is 2.86×10^8 kg/yr, and the amount of steam required is 1.98×10^8 kg/yr. Additionally, this section of the plant has an electricity requirement of $1,241,433 kWh/yr. This includes the energy needed to run the pumps, as well as the energy required for other process units taken from the ICR report.

The fermentation process was modified significantly from the existing ethanol plant. Thus, it was not possible to use the existing utility requirement sheets. It is estimated that the

fermentation process uses 990,000,000 kg of cooling water per year, as well as 1,998,996 kWh/yr of electricity. These are based on the known amounts of electricity consumed by the current fermenters scaled by the number of fermenters used in this process. Startup for the fermentation is assumed to be occurring for one third of the year, 110 days, and consume the energy equal to one fermenter in the fermentation process since the sum of the volumes of the vessels is approximately equal to the volume of one fermenter. There is some uncertainty in the energy requirements needed for the fermenters since they operate under temperature controllers and need to be maintained at 37°C. That said, Mr. Bockrath suggested that cooling water in existing cooling towers is sufficient and that cost will be negligible compared to other utility costs within the process.

While utilities minimization was not considered during the preliminary process design, there was an existing heat integration between streams that was retained in the retrofit. This network was maintained, harnessing the heat from process streams, so that the amount of cooling water could be minimized. There is a series of four heat exchangers and two pumps, of which only two cooling water streams are required. Process streams were both heated and cooled with other process streams, as is the case for example with unit 316E. A detailed flowsheet of this heat integration is included in Appendix B. Heat exchanger networks were simulated in ASPEN to ensure that the area of existing heat exchangers was sufficient and to determine the amount of cooling water needed. Differences in flow rates and temperatures of streams in this network of heat exchangers led to the development of several changes to the current ethanol plant's heat integration, however, it was reconciled prior to separation using only preexisting exchangers.

The separation process includes both the solid filtration to produce DDGS, the liquid-liquid extraction of the organics and the distillation used to purify the products. Due the modified

solid filtration, the flow-rate into the DDGS is one fifth of the original flow-rate in the ethanol plant, as the amount of water is greatly reduced; this difference occurs from the use of filtration rather than distillation via a beer column, which forces most of the water to traditionally drop out of the ethanol in the bottoms with the DDGS. Thus, the energy requirement for the DDGS process was scaled according to this new reduced flow-rate; that is, by a factor of 0.315. Therefore, the total amount of electricity required for the DDGS processing is 4,736,992 kWh/yr. That said, DDGS has a profit of $0.37/ kg butanol, which more than the cost of utilities for the entire process, thus its processing is essential to the profitability of the plant. The energy requirement for the heat exchangers in this separation, all of which used chilled water, is calculated by finding the enthalpy differences between the input and output streams converted to an annual basis. The total amount of chilled water required is calculated to be 2,430,75,158 kg/yr. There is also an electricity requirement of 153,850,620 kWh/yr to run all of the pumps, vessels, and columns. Notably, the first column, 501T and the second heat exchanger, HEAT2, consume the most energy in the proposed process.

The activated carbon adsorbers have no constant energy requirement. They only require energy to release the organic from the activated carbon. To achieve this release there is a temperature requirement of 200°C and a high pressure. However, it was difficult to cost for this scenario due to lack of information, especially in regarding the time need to release the organic, so this utility cost was assumed to be included in the price of the unit.

Section of Plant	Utility	Process Unit	Quantity (kg/hr)	|ΔH|/kg (cal/kg)	Quantity (kg/yr)	Total Energy Input (GJ/yr)
Liquefaction						
	Chilled Water	315E	150,000	17024.5	1,188,000,000	84,621.84
ABE Separation						
	Chilled Water	HEAT1	39,634	49564.2	313,901,280	65,095.78
	Chilled Water	HEAT2	91,878	182285.5	727,673,760	554,984.07
	Chilled Water	HEAT3	9,008	42825	71,340,509	12,782.78
	Chilled Water	HEAT4	2,432	52822.7	19,261,915	4,257.08
	Chilled Water	HEAT5	5,315	861.8442	42,090,919	151.78
	Chilled Water	HEAT6	540	27200.9	4,280,364	487.14
	Chilled Water	HEAT7	1,441	83527.7	11,414,462	3,989.13
	Chilled Water	HEAT8	6,666	175099.4	52,791,948	38,676.21
		Total	**306,914**	**631,212**	**2,430,755,158**	**765,045.80**

Table 7. Quantity of chilled water needed annually, the enthalpy change based on the entering and exiting temperature of the chilled water and the total energy needed to recycle chilled water through the process annually.

Section of Plant	Utility	Process Unit	Quantity (kg/hr)	Quantity (kg/yr)
Liquefaction				
	Cooling Water	HX-101	36,106	285,959,520
Fermentation				
	Cooling Water	402E	125,000	990,000,000
			Total	**1,275,959,520**

Table 8. Quantity of cooling water needed annually in kg/yr broken down by section of the plant.

Section of Plant	Utility	Process Unit	Quantity (kg/hr)	Quantity (kg/yr)
Liquefaction				
	Steam (10.34 bar)	313E	25,000	198,000,000
			Total	**198,000,000**

Table 9. Quantity of steam needed annually in kg/yr broken down by section of the plant.

Section of Plant	Utility	Process Unit	Quantity (kWh/year)
Corn Processing			
	Electricity	101MH	768,240
	Electricity	103MH	220,259
	Electricity	104M	2,482,544
Liquefaction			
	Electricity	302P	1,584
	Electricity	304P	1,476
	Electricity	306P	29,530
	Electricity	307V	91,315
	Electricity	308P	28,116
	Electricity	310V	604,866
	Electricity	311P	396,000
	Electricity	322P	88,546
Fermentation			
	Electricity	407P	75,360
	Electricity	405V-A	480,909
	Electricity	405V-B	480,909
	Electricity	405V-C	480,909
	Electricity	SU-1-9	480,909
ABE Separation			
	Electricity	411P	71,359
	Electricity	501T	132,174,337
	Electricity	503T	8,399,240
	Electricity	318P	1,030
	Electricity	507T	1,530,379
	Electricity	COL4	10,630,903
	Electricity	502P	295,297
DDGS Separation			
	Electricity	601V	11,866
	Electricity	605V	9,722
	Electricity	604MH	32,663
	Electricity	606P	118,119
	Electricity	602P	295,297
	Electricity	610D	2,358,684
	Electricity	612MH	93,001
	Electricity	607Ev	1,496,000
	Electricity	603C	321,640
		Total	**164,551,009**

Table 10. Quantity of electricity needed annually in kWh/yr broken down by unit and section of the plant.

Unit	Reboiler Duty	Condenser Duty	Net Heat (cal/sec)	Net Heat (kW)	kWh/year
501T	7,748,590	- 3,759,900	3,988,690	16,689	132,174,337
503T	720,466	- 466,998	253,468	1,061	8,399,240
507T	228,054	- 181,871	46,183	193	1,530,379
COL4	435,969	- 115,155	320,814	1,342	10,630,903

Table 11. Heat duties for the reboilers and condensers for the distillation columns. The net heat in kW needed to operate each column, and the electricity needed to operate the columns in kWh/yr.

Utility	Total Amount	Unit	$/Unit	$/year	$/kg Butanol
Chilled Water	765,046	GJ	$ 4.00	3,060,183.22	$ 0.0462
Cooling Water	1,275,959,520	kg/year	$ 0.00002	25,519.19	$ 0.0004
Steam	198,000,000	kg/year	$ 0.00660	1,306,800.00	$ 0.0197
Electricity	164,551,009	kWh/hr	$ 0.07000	11,518,570.66	$ 0.1740
			Total	**15,911,073.07**	

Table 12. The total amount of utilities needed in their respective units, the price per unit and the amount spent per year on each utility. Additionally, there is a breakdown of dollars spent per kg butanol sold for each type of utilities.

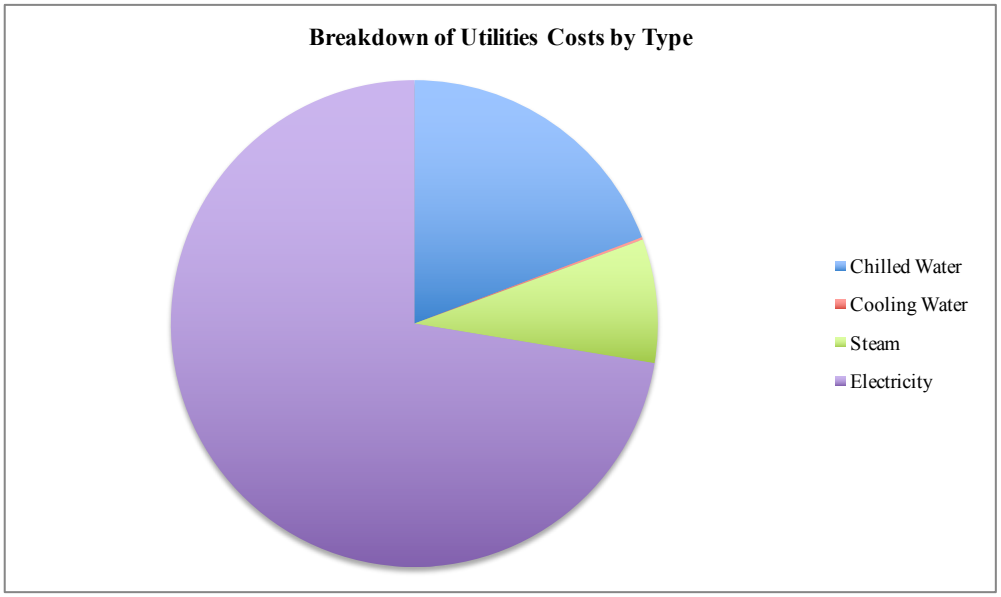

Figure 15. Pie chart of utility cost breakdown by type of utility. Electricity is clearly the dominant utility cost, followed by chilled water.

Economic Analysis

To determine the profitability of the proposed process for the production of biobutanol, the ProfitabilityAnalysis-4.0.xls spreadsheet prepared by Mr. Brian K. Downey was used. Given that production is in the U.S. Midwest, a site factor of 1.15 from *Seider et. al.* was applied to all costs. Additionally, there is an operating factor of 0.9040 to account for 330 days per year of production and production will start at 50% of capacity and increase to full capacity within two years. For the purposes of NPV calculations, a standard tax rate of 37% and a discount rate of 15% was applied to costs and cash flows. The projected profitability of this project is based on the production of 66,175,757 kg of biobutanol produced per year sold at $2.90 per kg butanol.

General Information

Process Title:	**Retrofit of Corn Ethanol Plant to Produce Biobutanol through Fermentation**
Product:	**Biobutanol**
Plant Site Location:	**U.S. Midwest**
Site Factor:	**1.15**
Operating Hours per Year:	**7919**
Operating Days Per Year:	**330**
Operating Factor:	**0.9040**

Product Information

This Process will Yield

8,357	kg of Biobutanol per hour
200,557	kg of Biobutanol per day
66,175,757	kg of Biobutanol per year

Price **$2.90 /kg**

Chronology

Year	Action	Distribution of Permanent Investment	Production Capacity	Depreciation 5 year MACRS	Product Price
2017	Design		0.0%		
2018	Construction	100%	0.0%		
2019	Production	0%	45.0%	20.00%	$2.90
2020	Production	0%	67.5%	32.00%	$2.90
2021	Production	0%	90.0%	19.20%	$2.90
2022	Production		90.0%	11.52%	$2.90
2023	Production		90.0%	11.52%	$2.90
2024	Production		90.0%	5.76%	$2.90
2025	Production		90.0%		$2.90
2026	Production		90.0%		$2.90
2027	Production		90.0%		$2.90
2028	Production		90.0%		$2.90
2029	Production		90.0%		$2.90
2030	Production		90.0%		$2.90
2031	Production		90.0%		$2.90
2032	Production		90.0%		$2.90
2033	Production		90.0%		$2.90

Table 13. General process information input into the profitability spreadsheet.

Fixed-Capital Investment

The summary of all equipment costs are presented in Table 5 in the Equipment Cost Section. Table 14 shows the equipment bare module costs for all fixed-capital investments. This table includes equipment that was valued based on the Equipment Costing Sheet provided by Dr. Seider, and also includes other equipment that needs to be purchased, including two fermenters of the same size as those already present in the plant and nine seed fermenters. There were no seed fermenters present in the existing plant since yeast does not require the same growth conditions as Clostridia.

To price the largest fermenters, their value in 2007 was adjusted for inflation. To determine appropriate pricing for the seed fermenters Eppendorf and other vendors were contacted. For the seed tanks that are too large to be priced by a company, a price was interpolated using the price of the largest fermenters provided by a vendor and the fermenters in the plant. The activated carbon vessels were also priced after contact with a vendor. Appropriate bare module factors were applied to these pieces of equipment with the guidance of Dr. Seider and Professor Fabiano. Other fixed costs include the price to purchase the ethanol plant, which Mr. Vrana has estimated to be $40MM and the price of the solvent needed to loop through the system. The solvent needed at start-up was calculated by finding the volumetric flow rate in both recycle loops in kg/hr and that was multiplied by 6 hours and the current price of mesitylene which is $2.80/kg. The amount spent on mesitylene at start-up is $3,662,590 and is considered a capital cost. The total fixed costs from purchases of equipment and necessary investments total $67,647,187.

Equipment Costs		
Equipment Description		**Bare Module Cost**
405V-E	Process Machinery	$3,344,360
405V-F	Process Machinery	$3,344,360
RD-1	Process Machinery	$218,200
SU-1	Process Machinery	$75,000
SU-2	Process Machinery	$75,000
SU-3	Process Machinery	$108,160
SU-4	Process Machinery	$465,920
SU-5	Process Machinery	$1,206,400
SU-6	Process Machinery	$2,620,800
SU-7	Process Machinery	$2,624,956
SU-8	Process Machinery	$2,662,364
SU-9	Process Machinery	$3,036,436
LLE	Process Machinery	$1,853,454
HEAT1	Process Machinery	$192,182
HEAT2	Process Machinery	$672,377
HEAT3	Process Machinery	$139,262
HEAT4	Process Machinery	$122,832
HEAT5	Process Machinery	$167,024
LLE2	Process Machinery	$205,042
COL4	Process Machinery	$129,764
HEAT6	Process Machinery	$165,278
HEAT7	Process Machinery	$114,681
HEAT8	Process Machinery	$190,834
AC-A	Process Machinery	$124,955
AC-B	Process Machinery	$124,955
Corn Ethanol Plant	Other Equipment	$40,000,000
Mesitylene for start up	Catalysts	$3,662,590
Total		***$67,647,187***

Table 14. Bare Module costs of fixed capital investments needed to retrofit an existing corn ethanol plant including the cost to purchase the plant.

Operating Costs

Variable Costs

General expenses, including selling/transfer expenses, direct research, allocated research, administrative expense, and management incentive compensation were all set to typical percentages of sales, as suggested by Seider, et. al. and comprise variable operating costs. Standard timing for accounting metrics including accounts receivable and raw materials were used for working capital.

Variable Costs		
General Expenses:		
Selling / Transfer Expenses:	**3.00%**	**of Sales**
Direct Research:	**4.80%**	**of Sales**
Allocated Research:	**0.50%**	**of Sales**
Administrative Expense:	**2.00%**	**of Sales**
Management Incentive Compensation:	**1.25%**	**of Sales**

Working Capital			
Accounts Receivable	⇨	**30**	**Days**
Cash Reserves (excluding Raw Materials)	⇨	**30**	**Days**
Accounts Payable	⇨	**30**	**Days**
Biobutanol Inventory	⇨	**4**	**Days**
Raw Materials	⇨	**2**	**Days**

Table 15. Variable costs and working capital associated with plant operation.

Fixed Costs

Total permanent investment was also set at recommended percentages. Cost of site preparations and cost of service facilities were set at 10% and 5% of total bare module costs, respectively. The lower end of the range from 10-20% of total bare module costs was chosen for the cost of site preparations because our site is largely set up from its previous use. Cost of contingencies and contractor fees was set at 18% of direct permanent investment. Finally, cost of land and cost of plant start-up were set at 2% and 10% of total depreciable capital, respectively. We assumed 11 operators per shift. Under continuous operation, fluids processing (in our process, ABE separation) requires one operator, solids-fluids processing (in our process, liquefaction and fermentation) requires two operators each, and solids processing (in our process, corn processing and DDGS separation) requires three operators each, totaling 11 operators per shift. Wages and benefits were assumed to be 4.68% of total depreciable capital by calculating the weighted average of percentages of total depreciable capital by the number of operators working in each type of section based on type of process. All other percentages and values were set at recommended levels.

Total Permanent Investment		
Cost of Site Preparations:	10.00%	of Total Bare Module Costs
Cost of Service Facilities:	5.00%	of Total Bare Module Costs
Allocated Costs for utility plants and related facilities:	$0	
Cost of Contingencies and Contractor Fees:	18.00%	of Direct Permanent Investment
Cost of Land:	2.00%	of Total Depreciable Capital
Cost of Royalties:	$0	
Cost of Plant Start-Up:	10.00%	of Total Depreciable Capital

Fixed Costs		
Operations		
Operators per Shift:	11	(assuming 5 shifts)
Direct Wages and Benefits:	$40	/operator hour
Direct Salaries and Benefits:	15%	of Direct Wages and Benefits
Operating Supplies and Services:	6%	of Direct Wages and Benefits
Technical Assistance to Manufacturing:	$60,000.00	per year, for each Operator per Shift
Control Laboratory:	$65,000.00	per year, for each Operator per Shift
Maintenance		
Wages and Benefits:	4.68%	of Total Depreciable Capital
Salaries and Benefits:	25%	of Maintenance Wages and Benefits
Materials and Services:	100%	of Maintenance Wages and Benefits
Maintenance Overhead:	5%	of Maintenance Wages and Benefits
Operating Overhead		
General Plant Overhead:	7.10%	of Maintenance and Operations Wages and Benefits
Mechanical Department Services:	2.40%	of Maintenance and Operations Wages and Benefits
Employee Relations Department:	5.90%	of Maintenance and Operations Wages and Benefits
Business Services:	7.40%	of Maintenance and Operations Wages and Benefits
Property Taxes and Insurance		
Property Taxes and Insurance:	2%	of Total Depreciable Capital
Straight Line Depreciation		
Direct Plant:	8.00%	of Total Depreciable Capital, less 1.18 times the Allocated Costs for Utility Plants and Related Facilities
Allocated Plant:	6.00%	of 1.18 times the Allocated Costs for Utility Plants and Related Facilities
Other Annual Expenses		
Rental Fees (Office and Laboratory Space):	$0	
Licensing Fees:	$0	
Miscellaneous:	$0	
Depletion Allowance		
Annual Depletion Allowance:	$0	

Table 16. Total permanent investment and fixed costs as percentages of bare module costs and maintenance and operations wages and benefits.

Cost of Manufacturing

Based on the material balance, Table 17, shows the ratio of kg of input required for every kg of biobutanol produced. Currently, the cost of these inputs is $1.844 per kg of butanol.

Butanol sells at $2.90 per kilogram and there is a profit from the co-products of $0.535 per kg of butanol.

Raw Materials

	Raw Material:	Unit:	Required Ratio:		Cost of Raw Material:	
1	Corn	kg	5.5466	kg per kg of Biobutanol	$0.156	per kg
2	Lime	kg	0.006621	kg per kg of Biobutanol	$0.02	per kg
3	Ammonia	kg	0.01108	kg per kg of Biobutanol	$0.53	per kg
4	Alpha-amylase	kg	0.003885	kg per kg of Biobutanol	$1.00	per kg
5	Nutrients	kg	1.1212	kg per kg of Biobutanol	$0.21	per kg
6	Mesitylene	kg	0.2609	kg per kg of Biobutanol	$2.80	per kg
7	Nitrogen	m3	0.00045175	m3 per kg of Biobutanol	$6.95	per m3
8	Bacteria	unit	3.0217E-07	unit per kg of Biobutanol	$1,416.00	per unit

Total Weighted Average: $1.844 per kg of Biobutanol

Byproducts

	Byproduct:	Unit:	Ratio to Product		Byproduct Selling Price	
1	DDGS	kg	2.7577	kg per kg of Biobutanol	$0.135	per kg
2	Acetone	kg	0.1166	kg per kg of Biobutanol	$1.399	per kg

Total Weighted Average: $0.535 per kg of Biobutanol

Table 17. Cost of raw materials and the amount of input used per kilogram of butanol produced and the profits from sales of byproducts and ratio of byproduct produced per kilogram of butanol produced.

The economic potential of this process given the current prices is thus $1.591 per kg of butanol sold. Utilities, summarized below in Table 18, deduct an additional $0.240 per kg butanol giving a profit margin without other expenses of $1.351 per kg.

Utilities

	Utility:	Unit:	Required Ratio		Utility Cost	
1	Medium Pressure Steam	kg	2.992	kg per kg of Biobutanol	$6.600E-03	per kg
2	Process Water	kg	0.05456087	kg per kg of Biobutanol	$1.321E-04	per kg
3	Cooling Water	kg	19.278	kg per kg of Biobutanol	$2.000E-05	per kg
4	Electricity	kWh	2.4861	kWh per kg of Biobutanol	$0.070	per kWh
5	Chilled Water	GJ	0.01156	GJ per kg of Biobutanol	$4.000	per GJ

Total Weighted Average: $0.240 per kg of Biobutanol

Table 18. Utility ratios per kilogram of butanol produced and the associated cost of utilities.

The required ratios of inputs in kg per kg of butanol reflect the sensitivity of the profit margin to a change in the price of the input. For example, a $0.01 increase in the price of corn will immediately reduce profits by $0.055 per kg of butanol sold. More in depth sensitivity analyses were conducted for changes in the price of corn, nutrients and mesitylene, the three raw materials that are both most likely to fluctuate in price and most influential on the profit margin given their input ratio.

Currently, the net present value of the project is $(911,900). Corn costs $0.15591 per kg, and if the price decreases to $0.150 the NPV of the project becomes $4,572,800. Similarly, if it increases to $0.160, the NPV drops to $(4,707,700). If corn prices dropped significantly, for example to $0.130 per kg, this process could become reasonably profitable and would have a net present value of $23,133,800.

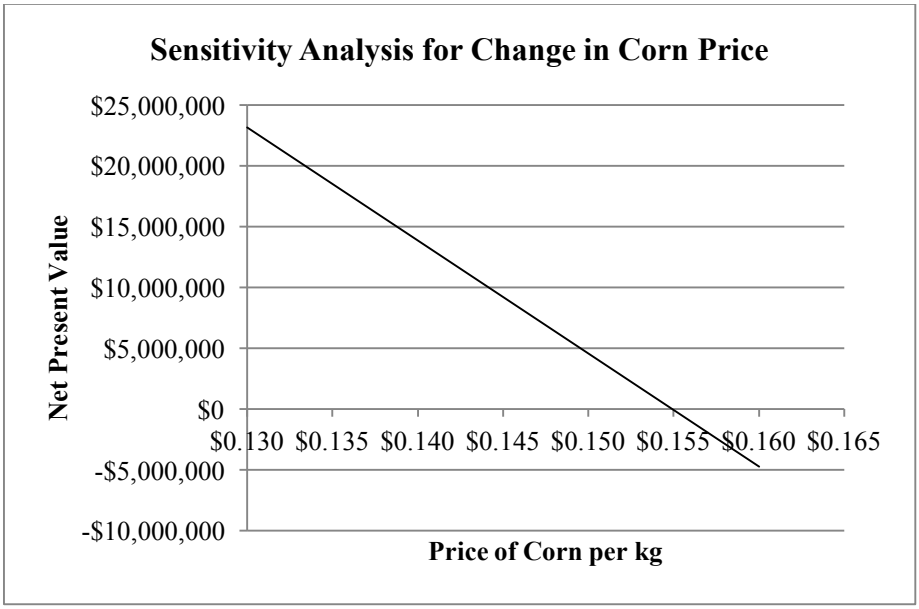

Figure 16. Change in NPV of the project with corn price fluctuation.

Similarly, the price of nutrients has a significant effect on the profitability. The price of nutrients is currently $0.21 per kg, if it drops to $0.10 per kg the NPV increases to $19,723,800.

Any increase in the price of nutrients would be catastrophic to the plant. For example, if the price of nutrients is $0.30 per kg, the NPV becomes $(17,795,700).

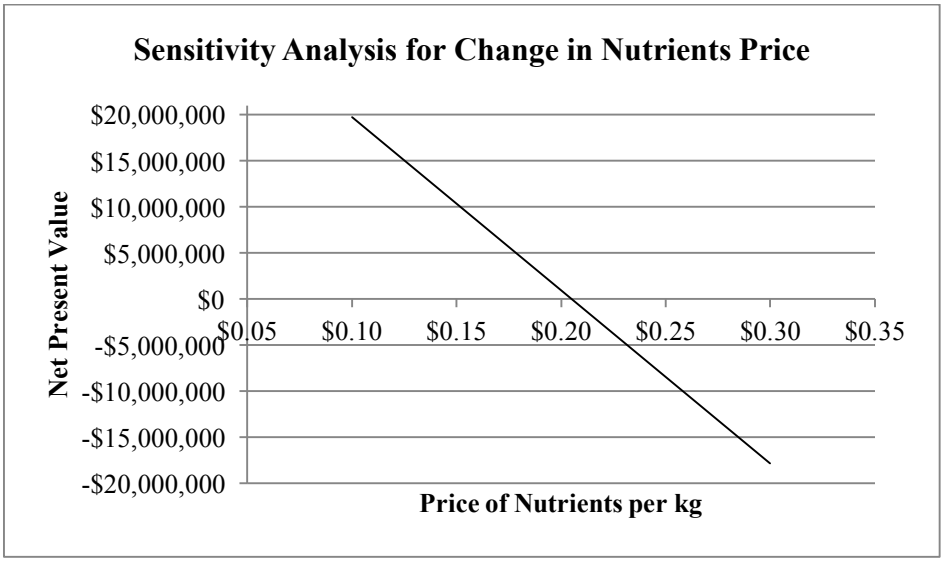

Figure 17. Change in NPV of the project with nutrient price fluctuation.

Mesitylene is currently priced at $2.80 per kg. If this increased to $3.00 the NPV would be $(9,642,600). If it decreased to $2.60 per kg, the NPV would be $7,818,700.

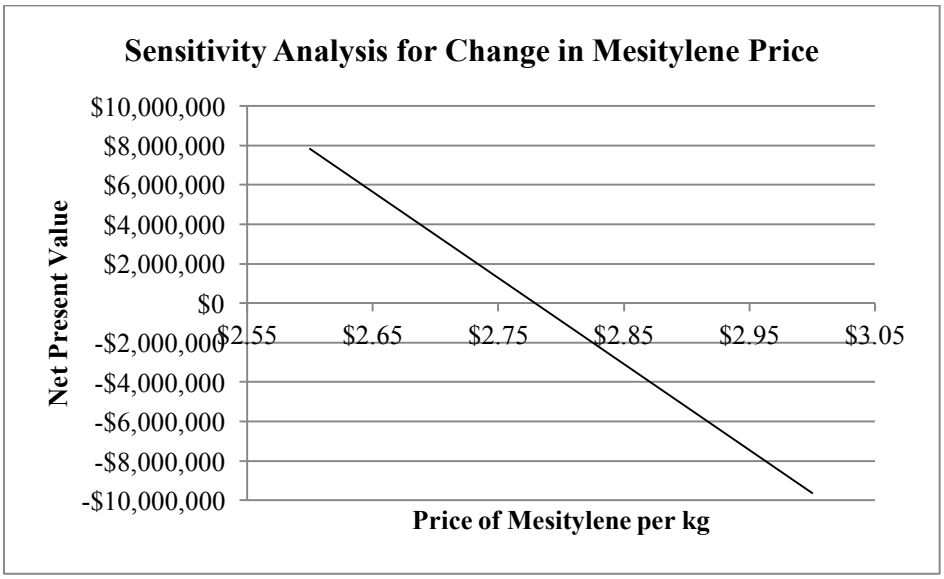

Figure 18. Change in NPV of the project with mesitylene price fluctuation.

As seen by this analysis, market fluctuations in the prices of the raw materials alter the NPV and other profitability measures significantly, and the higher the ratio of input used to kg of

butanol produced, the more sensitive these measures are to changes in price. As such, fluctuations in the price of corn have the most impact on the NPV of the project.

Since the NPV is very close to zero, which is typically the bound used to determine if an investment should be accepted or rejected, there is no flexibility within this process for the inevitable changes in market prices. As such, even though slight fluctuations in market prices may be favorable and yield a positive NPV, an investment in this process would be extremely risky. The prices can increase just as easily as they can decrease. That said, the price in corn is dropping significantly and has shown decreasing trends over time, should the price drop significantly and show stability at a lower price, this process could be reconsidered. Under the current assumptions, the price of corn would need to be $0.1549 per kg rather than $0.15591 per kg for the NPV of the project to be equal to zero.

Figure 19. Graph tracking corn prices over the last five years. There has been a significant decrease in corn price recently, which is a favorable trend for this process.

Profitability Analysis

Cost Summary

This process was designed to have a standard production lifetime of 15 years. When operating at 100% capacity, annual variable costs will total $124,684,094 and annual fixed costs will total $26,553,178. These costs are subdivided by category in Table 19 below.

Variable Cost Summary			
Variable Costs at 100% Capacity:			
General Expenses			
Selling / Transfer Expenses:		$	5,757,291
Direct Research:		$	9,211,665
Allocated Research:		$	959,548
Administrative Expense:		$	3,838,194
Management Incentive Compensation:		$	2,398,871
Total General Expenses		$	22,165,570
Raw Materials	$1.844191 per kg of Biobutanol		$122,040,765
Byproducts	$0.535413 per kg of Biobutanol		($35,431,354)
Utilities	$0.240407 per kg of Biobutanol		$15,909,113
Total Variable Costs		**$**	**124,684,094**

Fixed Cost Summary		
Operations		
Direct Wages and Benefits	$	4,576,000
Direct Salaries and Benefits	$	686,400
Operating Supplies and Services	$	274,560
Technical Assistance to Manufacturing	$	3,300,000
Control Laboratory	$	3,575,000
Total Operations	**$**	**12,411,960**
Maintenance		
Wages and Benefits	$	4,296,111
Salaries and Benefits	$	1,074,028
Materials and Services	$	4,296,111
Maintenance Overhead	$	214,806
Total Maintenance	**$**	**9,881,054**
Operating Overhead		
General Plant Overhead:	$	754,910
Mechanical Department Services:	$	255,181
Employee Relations Department:	$	627,320
Business Services:	$	786,808
Total Operating Overhead	**$**	**2,424,219**
Property Taxes and Insurance		
Property Taxes and Insurance:	$	1,835,945
Other Annual Expenses		
Rental Fees (Office and Laboratory Space):	$	-
Licensing Fees:	$	-
Miscellaneous:	$	-
Total Other Annual Expenses	**$**	**-**
Total Fixed Costs	**$**	**26,553,178**

Table 19. Variable and fixed cost summaries.

In addition to annual costs, there is also a large up front investment needed for this process. The total bare module costs are $67,647187, including the purchase cost of the existing ethanol plant. Other costs, such as those associated with site preparation and land, are detailed in Table 20 below, which summarizes all investments and working capital.

Investment Summary

Total Bare Module Costs:			
Fabricated Equipment	$	-	
Process Machinery	$	23,984,597	
Spares	$	-	
Storage	$	-	
Other Equipment	$	40,000,000	
Catalysts	$	3,662,590	
Computers, Software, Etc.	$	-	
Total Bare Module Costs:			**$ 67,647,187**
Direct Permanent Investment			
Cost of Site Preparations:	$	6,764,719	
Cost of Service Facilities:	$	3,382,359	
Allocated Costs for utility plants and related facilities:	$	-	
Direct Permanent Investment			**$ 77,794,265**
Total Depreciable Capital			
Cost of Contingencies & Contractor Fees	$	14,002,968	
Total Depreciable Capital			**$ 91,797,233**
Total Permanent Investment			
Cost of Land:	$	1,835,945	
Cost of Royalties:	$	-	
Cost of Plant Start-Up:	$	9,179,723	
Total Permanent Investment - Unadjusted			$ 102,812,901
Site Factor			1.15
Total Permanent Investment			**$ 118,234,836**

Working Capital

		2018	**2019**	**2020**
Accounts Receivable	$	7,098,030	$ 3,549,015	$ 3,549,015
Cash Reserves	$	1,570,523	$ 785,262	$ 785,262
Accounts Payable	$	(5,102,256)	$ (2,551,128)	$ (2,551,128)
Biobutanol Inventory	$	946,404	$ 473,202	$ 473,202
Raw Materials	$	300,922	$ 150,461	$ 150,461
Total	**$**	**4,813,624**	**$ 2,406,812**	**$ 2,406,812**
Present Value at 15%	*$*	*4,185,760*	*$ 1,819,895*	*$ 1,582,518*
Total Capital Investment			**$ 125,823,009**	

Table 20. Investment summary and working capital.

Cash Flows

Cash Flow Summary

Year	Percentage of Design Capacity	Product Unit Price	Sales	Capital Costs	Working Capital	Var Costs	Fixed Costs	Depreciation	Depletion Allowance	Taxible Income	Taxes	Net Earnings	Cash Flow	Cumulative Net Present Value at 15%
2017	0%		-	-	-	-	-	-	-	-	-	-	-	-
2018	0%		-	(118,234,800)	(4,813,600)	-	-	-	-	-	-	-	(123,048,500)	(106,998,700)
2019	45%	$2.90	86,359,400	-	(2,406,800)	(56,107,800)	(26,553,200)	(18,359,400)		(14,661,100)	5,424,600	(9,236,500)	6,716,100	(101,920,300)
2020	68%	$2.90	129,539,000	-	-	(84,161,800)	(26,553,200)	(29,375,100)		(10,551,000)	3,903,900	(6,647,100)	20,321,200	(88,558,800)
2021	90%	$2.90	172,718,700	-	(2,406,800)	(112,215,700)	(26,553,200)	(17,625,100)		16,324,800	(6,040,200)	10,284,600	27,909,700	(72,601,300)
2022	90%	$2.90	172,718,700	-	-	(112,215,700)	(26,553,200)	(10,575,000)		23,374,800	(8,648,700)	14,726,100	25,301,200	(60,022,200)
2023	90%	$2.90	172,718,700	-	-	(112,215,700)	(26,553,200)	(10,575,000)		23,374,800	(8,648,700)	14,726,100	25,301,200	(49,083,800)
2024	90%	$2.90	172,718,700	-	-	(112,215,700)	(26,553,200)	(5,287,500)		28,662,300	(10,605,100)	18,057,300	23,344,800	(40,307,600)
2025	90%	$2.90	172,718,700	-	-	(112,215,700)	(26,553,200)	-		33,949,900	(12,561,400)	21,388,400	21,388,400	(33,315,700)
2026	90%	$2.90	172,718,700	-	-	(112,215,700)	(26,553,200)	-		33,949,900	(12,561,400)	21,388,400	21,388,400	(27,235,800)
2027	90%	$2.90	172,718,700	-	-	(112,215,700)	(26,553,200)	-		33,949,900	(12,561,400)	21,388,400	21,388,400	(21,948,900)
2028	90%	$2.90	172,718,700	-	-	(112,215,700)	(26,553,200)	-		33,949,900	(12,561,400)	21,388,400	21,388,400	(17,351,600)
2029	90%	$2.90	172,718,700	-	-	(112,215,700)	(26,553,200)	-		33,949,900	(12,561,400)	21,388,400	21,388,400	(13,353,900)
2030	90%	$2.90	172,718,700	-	-	(112,215,700)	(26,553,200)	-		33,949,900	(12,561,400)	21,388,400	21,388,400	(9,877,700)
2031	90%	$2.90	172,718,700	-	-	(112,215,700)	(26,553,200)	-		33,949,900	(12,561,400)	21,388,400	21,388,400	(6,854,900)
2032	90%	$2.90	172,718,700	-	-	(112,215,700)	(26,553,200)	-		33,949,900	(12,561,400)	21,388,400	21,388,400	(4,226,400)
2033	90%	$2.90	172,718,700	-	9,627,200	(112,215,700)	(26,553,200)	-		33,949,900	(12,561,400)	21,388,400	31,015,700	(911,900)

Table 21. Summary of cash flows for this process.

The cash flows for this process are included in Table 21. While there are positive cash flows, as seen in Figure 20, associated with selling the products, the investment is never fully recovered and thus the cumulative NPV at 15% is $(911,900). It can be seen that in the first year there is a significant investment, however, the cash flows become steady during approximately the third year of production and hover around $21,388,400 through the fifteenth and final year of the proposed plant. Given that the cumulative NPV is so close to zero, a longer plant lifetime would likely induce turnover and bring the NPV to zero or a positive value.

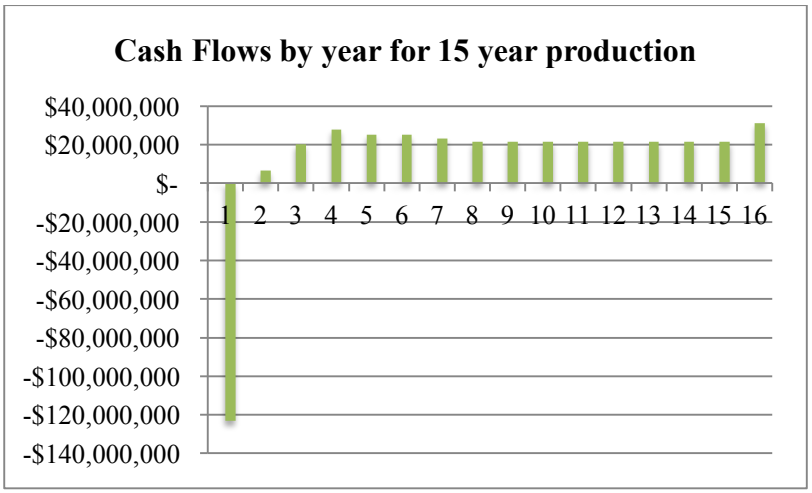

Figure 20. Cash flows over time for 15 years of planned production.

A change in the discount rate, however, does greatly improve the NPV and it is very plausible that capital can be

borrowed at rate lower than 15%. At a discount rate of 10%, which is more realistic for this investment, the NPV jumps to $35,294,200 and there is an ROI of 12.07%. If the investment were entirely risk-free its cost of capital would be 2.034% as quoted by the U.S. Treasury as the average rate for long term borrowing (TreasuryDirect.gov). This rate would yield a net present value of $154,666,600. The large fluctuation in the net present value of this process with changes in the discount rate emphasizes that careful consideration should be taken if investing in this project. Dependent on the cost of capital, it would be a worthwhile investment so long as the discount rate is below the IRR, which is 14.84%. The projects ROI of 12.07% is higher than the average ROI in the Chemical Industry for Q4 of 2015, which was 9.2% (CSIMarkets.com) and shows that this project could be a worthwhile investment if the cost of capital is low.

Profitability Measures

Profitability Measures		
The Internal Rate of Return (IRR) for this project is		14.84%
The Net Present Value (NPV) of this project in 2017 is	$	(911,900)

ROI Analysis (Third Production Year)

Annual Sales	**172,718,725**
Annual Costs	**(138,768,862)**
Depreciation	**(9,458,787)**
Income Tax	**(9,061,698)**
Net Earnings	**15,429,378**
Total Capital Investment	**127,862,083**
ROI	**12.07%**

Table 22. Profitability measures of the proposed process.

The internal rate of return for this project is 14.84% and the NPV, at a discount rate of 15% is $(911,900). These numbers indicate that this process is a risky investment and that its profitability hinges on the prices of the inputs and the cost of capital. This can be seen by the

significant fluctuations in NPV with changes in prices of the inputs and with different discount rates. Without knowing the discount rate with certainty, it is difficult to state in this preliminary analysis that the project is feasible. If exploring this project in more depth, the cost of capital is a necessary variable that must be considered when deciding whether or not to proceed. At the given discount rate of 15% it is not recommended that the company proceed with this project, as they will not be able to be competitive in the market.

With regards to changes in the prices of raw materials, it is likely that if the price of inputs rises, the price of butanol would also rise having little impact on the profitability of the process. That said, the inputs such as nutrients and corn are in a different industry than the organic products and thus the risk of the input prices rising without the product prices also rising is more likely than if the inputs were also chemicals. This brings more inherent risk into the process and indicates that small changes in the prices of raw materials can have a drastic impact on the profitability of the process.

Furthermore, there is also a possibility that the fermentation will require more expensive equipment and controls to be run anaerobically and continuously. These processes have not been explored experimentally in plants, thus there would need to be preliminary testing, ideally at the pilot scale, and reevaluation to finalize some of the costs associated with this process and determine its profitability.

Sensitivity analyses of total permanent investment, fixed costs and variable costs are included below to show how the internal rate of return would vary given the price of butanol in the market. These analyses show that as costs increase the IRR goes negative. This occurs more profoundly for changes in variable costs as opposed to fixed costs. Additionally, as total

permanent investment increases, the IRR decreases. Profits will shift drastically if the selling price of butanol decreases.

Sensitivity Analyses

Note: The Sensitivity Analyses section below takes quite a bit of memory to update each time a cell is changed; therefore, automatic calculations are turned off. After making your axis selections, press "F9" to recalculate the IRR values. (These two lines may be deleted before printing.)

	Vary Initial Value by +/-
x-axis	50%
y-axis	50%

Product Price \ Total Permanent Investment	$59,117,418	$70,940,902	$82,764,385	$94,587,869	$106,411,353	***$118,234,836***	$130,058,320	$141,881,804	$153,705,287	$165,528,771	$177,352,254
$1.45	Negative IRR	Negative IRR	Negative IRR	Negative IRR	Negative IRR	Negative IRR	Negative IRR	Negative IRR	Negative IRR	Negative IRR	Negative IRR
$1.74	Negative IRR	Negative IRR	Negative IRR	Negative IRR	Negative IRR	Negative IRR	Negative IRR	Negative IRR	Negative IRR	Negative IRR	Negative IRR
$2.03	Negative IRR	Negative IRR	Negative IRR	Negative IRR	Negative IRR	Negative IRR	Negative IRR	Negative IRR	Negative IRR	Negative IRR	Negative IRR
$2.32	8.37%	2.09%	-3.21%	-7.96%	-12.53%	-17.29%	-22.79%	Negative IRR	Negative IRR	Negative IRR	Negative IRR
$2.61	34.61%	25.18%	18.19%	12.76%	8.37%	4.70%	1.54%	-1.23%	-3.72%	-5.99%	-8.09%
$2.90	54.20%	41.19%	31.84%	24.80%	19.29%	14.84%	11.14%	7.99%	5.27%	2.86%	0.72%
$3.19	71.44%	55.04%	43.38%	34.71%	28.03%	22.72%	18.38%	14.74%	11.64%	8.96%	6.59%
$3.48	87.22%	67.68%	53.82%	43.58%	35.75%	29.57%	24.57%	20.43%	16.94%	13.93%	11.31%
$3.77	101.94%	79.46%	63.53%	51.79%	42.84%	35.82%	30.17%	25.52%	21.62%	18.29%	15.41%
$4.06	115.80%	90.59%	72.70%	59.53%	49.50%	41.66%	35.36%	30.21%	25.90%	22.25%	19.11%
$4.35	128.92%	101.17%	81.44%	66.89%	55.83%	47.18%	40.26%	34.61%	29.91%	25.94%	22.53%

Sensitivity Analyses

Note: The Sensitivity Analyses section below takes quite a bit of memory to update each time a cell is changed; therefore, automatic calculations are turned off. After making your axis selections, press "F9" to recalculate the IRR values. (These two lines may be deleted before printing.)

	Vary Initial Value by +/-
x-axis	50%
y-axis	50%

Product Price \ Fixed Costs	$13,276,589	$15,931,907	$18,587,224	$21,242,542	$23,897,860	***$26,553,178***	$29,208,495	$31,863,813	$34,519,131	$37,174,449	$39,829,766
$1.45	Negative IRR	Negative IRR	Negative IRR	Negative IRR	Negative IRR	Negative IRR	Negative IRR	Negative IRR	Negative IRR	Negative IRR	Negative IRR
$1.74	Negative IRR	Negative IRR	Negative IRR	Negative IRR	Negative IRR	Negative IRR	Negative IRR	Negative IRR	Negative IRR	Negative IRR	Negative IRR
$2.03	Negative IRR	Negative IRR	Negative IRR	Negative IRR	Negative IRR	Negative IRR	Negative IRR	Negative IRR	Negative IRR	Negative IRR	Negative IRR
$2.32	2.33%	-0.19%	-3.05%	-6.45%	-10.80%	-17.29%	Negative IRR	Negative IRR	Negative IRR	Negative IRR	Negative IRR
$2.61	13.70%	12.05%	10.33%	8.55%	6.68%	4.70%	2.58%	0.26%	-2.31%	-5.26%	-8.84%
$2.90	22.09%	20.69%	19.26%	17.81%	16.34%	14.84%	13.30%	11.72%	10.09%	8.39%	6.62%
$3.19	29.26%	27.97%	26.67%	25.36%	24.05%	22.72%	21.38%	20.03%	18.65%	17.26%	15.85%
$3.48	35.74%	34.51%	33.28%	32.05%	30.81%	29.57%	28.33%	27.08%	25.83%	24.57%	23.29%
$3.77	41.75%	40.56%	39.38%	38.19%	37.01%	35.82%	34.63%	33.45%	32.26%	31.06%	29.87%
$4.06	47.43%	46.27%	45.11%	43.96%	42.81%	41.66%	40.50%	39.35%	38.20%	37.05%	35.90%
$4.35	52.84%	51.70%	50.57%	49.44%	48.31%	47.18%	46.06%	44.93%	43.81%	42.69%	41.57%

Sensitivity Analyses

Note: The Sensitivity Analyses section below takes quite a bit of memory to update each time a cell is changed; therefore, automatic calculations are turned off. After making your axis selections, press "F9" to recalculate the IRR values. (These two lines may be deleted before printing.)

	Vary Initial Value by +/-
x-axis	50%
y-axis	50%

Product Price \ Variable Costs	$62,342,047	$74,810,456	$87,278,866	$99,747,275	$112,215,684	***$124,684,094***	$137,152,503	$149,620,912	$162,089,322	$174,557,731	$187,026,140
$1.45	-9.13%	Negative IRR	Negative IRR	Negative IRR	Negative IRR	Negative IRR	Negative IRR	Negative IRR	Negative IRR	Negative IRR	Negative IRR
$1.74	7.95%	-1.01%	Negative IRR	Negative IRR	Negative IRR	Negative IRR	Negative IRR	Negative IRR	Negative IRR	Negative IRR	Negative IRR
$2.03	17.55%	11.56%	4.20%	-7.10%	Negative IRR	Negative IRR	Negative IRR	Negative IRR	Negative IRR	Negative IRR	Negative IRR
$2.32	25.27%	20.26%	14.73%	8.28%	-0.14%	-17.29%	Negative IRR	Negative IRR	Negative IRR	Negative IRR	Negative IRR
$2.61	32.07%	27.57%	22.78%	17.60%	11.76%	4.70%	-5.54%	Negative IRR	Negative IRR	Negative IRR	Negative IRR
$2.90	38.31%	34.12%	29.76%	25.16%	20.25%	14.84%	8.60%	0.62%	-13.33%	Negative IRR	Negative IRR
$3.19	44.16%	40.19%	36.09%	31.85%	27.42%	22.72%	17.64%	11.95%	5.16%	-4.27%	Negative IRR
$3.48	49.71%	45.90%	42.01%	38.00%	33.87%	29.57%	25.06%	20.23%	14.94%	8.89%	1.31%
$3.77	55.03%	51.35%	47.60%	43.78%	39.86%	35.82%	31.64%	27.28%	22.66%	17.68%	12.13%
$4.06	60.15%	56.58%	52.95%	49.26%	45.50%	41.66%	37.71%	33.63%	29.40%	24.95%	20.22%
$4.35	65.11%	61.62%	58.10%	54.52%	50.88%	47.18%	43.40%	39.54%	35.56%	31.44%	27.14%

Tables 23a, 23b, and 23c. Sensitivity analyses for the IRR as a function of product price and a) total permanent investment, b) fixed costs and c) variable costs.

The selling price of all three products also impacts the net present value of this process. The figures below show the NPV of the project at several different selling prices for butanol, acetone and DDGS if all other variables are held constant.

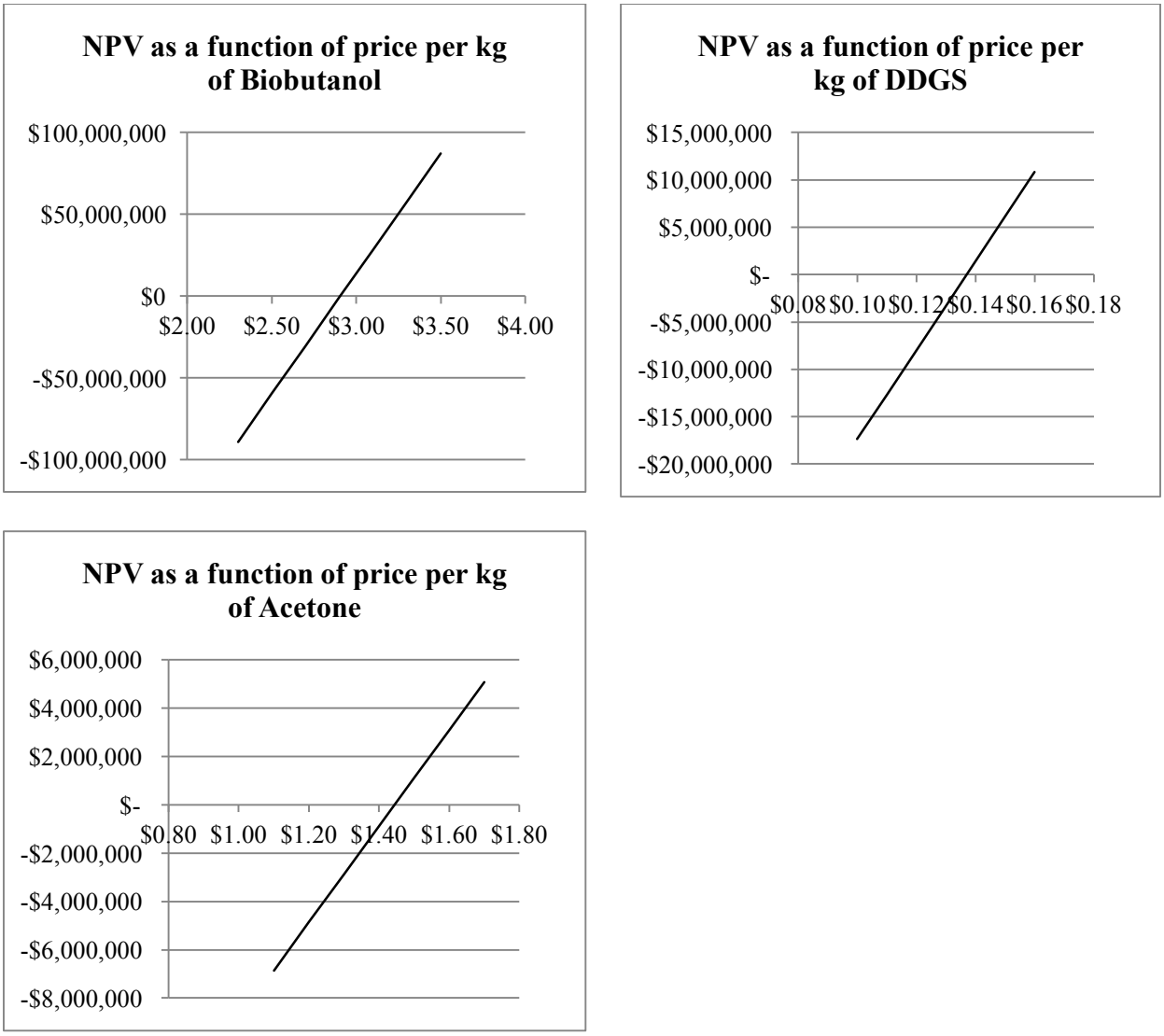

Figure 21. Net present value of the project as a function of the product prices for butanol, DDGS and acetone.

As can be seen by examining the y-axis of Figure 21, the price of butanol has the most impact on profitability followed by DDGS then acetone. This is because for every kilogram of butanol there are several kilograms of DDGS produced and thus the profit from DDGS as a co-product is higher than that of acetone.

Overall, the process would be rejected in the current market state due to the negative net present value. However, as shown in this economic analysis, numerous parameters weigh heavily on the potential profits of this project and a more thorough market analysis prior to making a final decision would be required for this process. Most notably, should the discount rate be lower than 14.84%, the current IRR, the process is profitable and economically feasible.

Other Important Considerations

Unrecovered Product

While liquid-liquid extraction provides a rigorous separation of the products, the large vapor stream exiting fermentation would require a tremendous capital investment to recover the product. That said, there is a loss of 134.5 kg/hr of butanol and 650.2 kg/hr of acetone in this stream. There is also a loss of 490.95 kg/hr of butanol and 235.1 kg/hr of acetone from the liquid separation. The unrecovered acetone and butanol from the liquid separation is lost in the activated carbon units. It was outside the scope of this project to determine how these products can be recovered after the activated carbon is cleaned and purged, however, it is possible that if developed further recovery would be plausible.

If these products were recovered the profitability of the plant increases dramatically. The amount of inputs required is entirely unchanged, but the ratios of these inputs relative to the amount of butanol produced decrease for all inputs and the ratio of co-products increases significantly. The profitability analysis shown below is adjusted for the profits from the currently unrecovered acetone and butanol. The inputs for this analysis were all the acetone produced in fermentation, so the amount currently being sold and the amount lost in separation, and the total amount of butanol produced in fermentation. The ratio of unrecovered butanol to recovered butanol is 0.075 kg unrecovered per kg recovered. At $2.90 per kg, this is an additional $0.217 in pure profit for every kg of butanol currently being produced. Additionally, the profitability of acetone as a co-product nearly doubles. As seen in Table 24 below, the IRR for this project jumps to 24.87% and the NPV is $61,346,200. The ROI nearly doubles to 22.79%.

Profitability Measures

The Internal Rate of Return (IRR) for this project is	24.87%
The Net Present Value (NPV) of this project in 2017 is	$ 61,346,200

ROI Analysis (Third Production Year)

Annual Sales	**172,718,725**
Annual Costs	**(117,012,422)**
Depreciation	**(9,458,787)**
Income Tax	**(17,111,581)**
Net Earnings	**29,135,936**
Total Capital Investment	**127,862,083**
ROI	**22.79%**

Table 24. Profitability measures as calculated with all inputs the same and all butanol and acetone produced in fermentation recovered.

The proposed process becomes very profitable and favorable under these conditions. This suggests that perhaps even a large capital investment would be justified given the amount of product that is currently being lost. The increased value obtained from making an investment and selling the product would need to be compared to the value obtained from the heat of combustion of the lost products to determine which decision is preferable from an economic standpoint. The process, utilizing combustion, currently harnesses an energy value of $-7.31*10^{14}$ calories from the lost product annually. When sensitivity analysis was done on an equipment investment to justify the product recovery development, up to $33,320,000 of capital investments can be made before the NPV of the project becomes $0 or the IRR drops to the discount rate of 15%. The jump in the NPV of the project from $(911,900) to $61,346,200 shows just how much the unrecovered products impact the profitability of the process. Under current proposed separation methods, the design is not necessarily competitive from an economic standpoint, but there is tremendous value in the process if a more efficient separation process is developed.

The overall recoveries for the entire process, based on the total amount of butanol and acetone produced during fermentation are 93.1% for butanol and 53.2% for acetone. Since there

is a significant amount of product lost in the separation process, there is room for process improvement and development to extract more value from the proposed fermentation reaction.

If 95% of the products are recovered at their current selling prices the cash flows from sales of the organic products alone would be $199,512,313 for butanol and $19,913,231 from acetone yielding $219,425,544 of sales on an annual basis.

Environmental Considerations

The carbon dioxide produced in the fermentation process is biogenic, and as such is not a concern when released into the environment. The carbon dioxide that can be considered harmful is the carbon dioxide produced from generating the electricity and heat that is used in the plant. Therefore, this plant cannot be considered fully carbon-neutral. Additionally, as part of our separation process, combustion of a stream that contains unrecoverable butanol, ethanol, and acetone is necessary, so that these organics are not released into the environment. According to Mr. Bockrath, typical guidelines for a manufacturing plant are that 40 tons/year of organics can be released into the environment. Adhering to this standard, the thermal oxidizer combusts all streams that have trace organics and releases carbon dioxide and water into the environment. Complete combustion was assumed, as the thermal reactor is designed to achieve close to complete combustion in the presence of excess air. However, this assumption is an ideal one, so in reality combustion is not 100% complete, so carbon monoxide, nitrogen oxides, and unreacted butanol, ethanol, and acetone may be released to the environment as a result.

Process Controllability and Instrumentation

Temperature, pH and gas flow control in the fermenters is crucial to the fermentation process. The conditions are anaerobic and at 37°C and it is imperative that these conditions are monitored in order for continuous fermentation to be successful. If the pH, for example, gets too low the reaction enters the acidogenic phase and the bacteria will produce disproportionate amounts of acetic and butyric acid which would ultimately lead to shut down of the process. 4X NaOH is to be added to the reactor to maintain a pH of 6.6.

It is also important to have process control for the temperatures and pressures of vessels including the LLE vessels and distillation columns. Varied operating conditions within the separation process could affect the recovery and purity of the products and byproducts. Lastly, it is important to control temperatures of heat exchangers. The large heat integration and networks of heat exchangers mean that even slight deviations from intended conditions could drastically alter the utilities in the process and cascades of streams. Additionally, both the fermentation vessels and heat exchange networks could require additional auxiliary utilities to regulate temperature.

Safety and Health Concerns

This plant uses and produces products that can be harmful if inhaled, ingested, or contacted with skin. Lime, ammonia, acetone, ethanol, and butanol can cause irritation, respiratory damage, and other issues if inhaled, ingested or contacted with skin, so protected wear, such as gloves, goggles, and clothing that covers all parts of the body, should be worn by plant workers. Additionally, ammonia, acetone, ethanol, and butanol are flammable materials. These materials need to be stored in cool, well ventilated, and segregated areas away from heat and flames to reduce the risk of explosions. Clostridia, the bacteria used in this process, is not

hazardous and is present normally in the human colon. It cannot produce toxins or virulent enzymes. That said, there is potentially more risk associated with using a bioengineered strain in processing and more research would need to be done regarding any safety risks.

Concerns Regarding Continuous Fermentation

While continuous fermentation is favorable given the solventogenic nature of Clostridia, there are also several considerations that cannot be fully evaluated without laboratory research. Firstly, there is the potential for the build-up of solids in the reactor over time even though the fermenter is operating as a CSTR. It would be important to monitor this over time to determine the duration for which continuous fermentation is feasible. Additionally, as acids build up in the reactor it is critical to control the pH through the addition of NaOH. The bacteria will begin to die if the concentration of acids in the reactor builds up, additionally, as the pH of the system increases the bacteria begin to become acidogenic and produce more acids relative to ABE solvents.

Similarly, the selectivity of solvents fluctuates and must be monitored as with all fermentation processes. This could cause slight modifications to the annual production volumes. Starch retro-degradation could also occur where the starch gelatinizes and the properties change. This typically corresponds to the point of acidogenisis, as noted by Ezeji et al. At this point, the reaction can no longer proceed. Finally, should any of these concerns occur and force the shut-down of the fermenters, there is a tremendous value in the time needed to regrow the bacteria and do the eight day start-up. In the first year of production, it would potentially be important to operate the seed fermenters more frequently than needed so that there is bacteria should it be needed to re-start the fermentation process.

Plant Location, Layout and Startup

In the U.S. Midwest, corn supply is expected to be readily available and locations to sell DDGS will require little transport. Butanol and acetone will perhaps need to be transported to sellers in other locations.

Plant layout is important to this process since the primary products are extremely flammable. Holding tanks should be set-up such that in the event of an explosion there is an escape route for plant operators. Additionally, holding tanks for acetone and butanol should be kept at pressure above atmospheric, as recommended by the consultants, to reduce the risk of explosion.

While the fermentation start-up was critical to process design, detailed start-up of the plant was not developed fully as it was largely outside the scope of the project. Furthermore, since a sufficient amount of the equipment is already present in the plant, installation time will likely be shorter than it would be for an entirely new plant. Piping would need to be altered and that is a cost that is included in the bare module factor for the new equipment, but is not accounted for with the purchased equipment from the existing plant.

Fouling in Heat Exchangers

In retrofitting the corn ethanol plants' existing heat exchangers fouling was taken into account. It was ensured that the area found following ASPEN simulation for heat integration was less than the area of the heat exchangers for the flow. For the heat exchangers in the separation process that were designed for purchase fouling was not taken into account. While fouling can affect the heat transfer coefficient of these exchangers, these pieces of equipment will foul more slowly than the existing equipment and the cost of accounting for fouling by increasing the area

of the exchangers would be insignificant relative to other capital investments. It is possible that when purchasing the heat exchangers for this design, slightly larger areas would be specified to take potential fouling into account. Additionally, for exchangers that have areas slightly larger than necessary due to the retrofit, portions of the exchangers can be bypassed if necessary.

Water Management

Late in the senior design course schedule, an error in the overall water balance was noticed. This error is limited to water and no other material present in this process. This error was found while performing a water balance to include in this section of the report, and was found too late to remedy as it would cascade through many areas in the process. As presented in Table 25, the total water input does not equal the total water output, as would be expected for continuous, and therefore steady-state, operation. This error is due to the fact that there are recycles in this process. At first, the recycle values were estimated and the remaining material balance was calculated using these values. Determining the actual values of the recycles requires iteration through the mass balance more than once through, which was done. However, this error went unnoticed due to the large number of streams and data to be calculated within each iteration, and the inability of Microsoft Excel to iterate in circular references.

Had this error been found earlier, another iteration would have been performed, so that the water in would have equaled the water out. Calculation of this would have required multiple re-runs of simulations in ASPEN, multiple re-calculations by hand, and another analysis of the economics of the process. While, we did not have enough time to fix the numbers exactly, the results of the process presented in this report would only change slightly, perhaps even to a negligible degree. This is due to the fact that the water balance differs by only 3,090 kg/hr, which

could be provided by recycled process water, and the fact that this error only affects water and not other materials in the process. Furthermore, 3,090 kg/hr of water would have little affect in streams that are made up of over 100,000 kg/hr of water throughout the process. Additionally, this amount of water would not change the sizing of vessels, utilities, or the composition of products to a significant degree.

We believed it to be ethically sound to report this issue and acknowledge that small errors, such as this, are unavoidable in the real world. An analysis of water management assuming a correct water balance follows.

Input Stream	Water In (kg/h)	Output Stream	Water Out (kg/h)
CORN	6952.61	Trash	20.86
CIP	2209.92	S-VAPOR	450.39
A-AMYLASE	32.47	DDGS	368.5
Produced in Fer	1636.06	S-BUTPROD	0.005
S-WATERADD	3090	S-ACEPROD	19.97
		S-AC	9972
Total	13921.06		10831.725

Table 25. Water balance on overall process. The water input does not equal the water output as would be expected in a continuous, and therefore steady-state, process. This is due to a mathematical error located late in the senior design schedule. Nonetheless, once corrected through iteration of the mass balance, would balance the water balance, and it would not have a large effect on the results of the process presented previously in this report.

As mentioned in the problem statement, water is scarce in the Corn Belt and many ethanol plants located in this region have zero process water discharge. In our process, roughly 10,000 kg/hr of water enters through CORN, CIP, and A-AMYLASE, and water is produced in fermentation. The corn inherently carries with it water, while CIP and A-AMYLASE require a source of water for input. Water exits our process through Trash, S-VAPOR, and S-AC, it also exits in the product streams, S-BUTPROD, S-ACEPROD, and DDGS. With the use of large recycle streams from DDGS separation and ABE separation, 100% of the process water necessary is kept within the process. Aside from process water, cooling water and steam, which are recycled cyclically, there is no loss or accumulation of water in the proposed design.

Conclusions and Recommendations

Following thorough material, energy and economic analyses, this report suggests that the production of biobutanol via continuous fermentation in a retrofitted 40MM gpy corn ethanol plant can be profitable under certain conditions, such as high butanol prices, low discount rates, or full product recovery, however it currently yields a net present value of $(911,900) when operating 330 days a year. For an estimate of 15 years of production, yearly sales are projected to be $172,718,700 and the project has a ROI of 12.07%

There are several notable areas for further process development and research. Firstly, there have been reports of bioengineered bacteria at an even higher selectivity. Due to the lack of laboratory work with such bacteria, we used a more conservative selectivity, however, this could potentially increase the yield of the products. Additionally, the duration the fermenters can operate still needs to be determined in a pilot plant.

To improve the economic viability of the proposed plant, further separation methods could be used to increase product recovery. As discussed as a part of *Other Considerations*, there is a large amount of potential profit that could be made if a more efficient separation method is used for ABE and water, perhaps involving the recovery of the product lose in the processing of the activated carbon. Additionally, a rigorous separation between acetone and water, which was outside the scope of this project, could improve the co-product recovery driving the net present value up over $61 million dollars with all other factors the same.

Prior to proceeding with the retrofit of an existing corn ethanol plant, it is recommended that some of the key issues highlighted in the economic analysis be reviewed further. While a 40MM gpy ethanol plant has little value for ethanol production when larger plants are more economical, there are several critical criteria that must be met for our company to capture profits

from the production of biobutanol. While harnessing value from depreciated assets and sunk investments seems promising, it is possible that with the additional investments necessary this project is not feasible. In conclusion, it is recommended that a laboratory scale-up of fermentation is done prior to developing the plant further to analyze details of the fermentation process that are not presented in this report due to the scope of the project.

Acknowledgements

We would like to acknowledge the many individuals that assisted and supported us throughout the duration of this project. We greatly appreciate their time and effort, and their guidance was instrumental to the preparation of this report.

We would like to thank Dr. Sean Holleran for all his help with this project. Dr. Holleran provided crucial feedback in both our weekly meetings as well as outside of the allotted time and we are extremely grateful for his contributions to this project. We would also like to thank Professor Leonard Fabiano for his help and guidance throughout this project. We would like to thank Mr. Bruce Vrana, the project author, for providing us with a challenging and worthwhile problem to work through and the real-world information important in this project.

In addition to those previously mentioned, we would like to thank Mr. Steven M. Tieri, DuPont, Mr. Adam A. Brostow, Air Products and Chemicals, and Dr. Richard Brockrath, DuPont, for their time during our weekly design meetings. Their invaluable insight into our project and help steering us in the right direction is very much appreciated. Finally, we would like to thank Dr. Miriam Wattenbarger for meeting with us outside of our weekly design meetings to discuss the fermentation section of our process. Her help was vital to the completion of the project.

References

"Acetone Market Analysis, Market Size, Application Analysis, Regional Outlook, Competitive Strategies And Forecasts, 2014 To 2020." *Grand View Research*. Grand View Research, Inc., n.d. Web. 3 Apr. 2016.

"Biobutanol." *European Biofuels*. EBTP-SABS, n.d. Web. 3 Apr. 2016.

"Bio-butanol Market Analysis By Application (Acrylates, Acetates, Glycol Ethers, Solvents, Plasticizers), And Segment Forecasts To 2022." *Grand View Research*. Grand View Research, Inc., Sept. 2015. Web. 3 Apr. 2016.

"Biofuel Feedstock & Coproduct Market Data." *Bioenergy*. United States Department of Agriculture, Economic Research Service, 15 Mar. 2016. Web. 3 Apr. 2016.

Borglum, Gerald B. Starch Hydrolysis for Ethanol Production. Rep. Miles Laboratories Industrial Products Group. PDF.

Calton, John. "US October Acetone Contract Price Settles 1.75 Cents Lower at 63.50 Cents/lb: Sources." - *Petrochemicals*. McGraw Hill Financial, n.d. Web. 10 Apr. 2016.

"Chemical Manufacturing Industry." *Management Effectiveness Information and Trends by Quarter, ROE, Return On Assets, Return On Investment from 4 Q 2015 to 4 Q 2014*. N.p., n.d. Web. 10 Apr. 2016.

Chen, Christina, Amira Fawcett, Amy Posner, and Tal Raviv. Butanol by Two Stage Fermentation. Rep. 2009. PDF.

"Clostridium Acetobutylicum McCoy Et Al. Emend. Keis Et Al. (ATCC® 824™)." *ATCC*. N.p., n.d. Web.

"Cobalt Biofuels." *Cobalt Technologies*. N.p., n.d. Web. 07 Apr. 2016.

"Corn." *Topics*. United States Department of Agriculture, Economic Research Service, 15 Dec. 2015. Web. 3 Apr. 2016.

"Corn Prices: When Will They Bottom?" *The Brock Report*. The Brock Report, 6 June 2014. Web. 3 Apr. 2016.

"Corn Production by Country in 1000 MT." IndexMundi, 2016. Web. 3 Apr. 2016.

"Current Fertilizer Prices and Projected 2016 Fertilizer Costs." *Farmdoc Daily*. N.p., n.d. Web. 10 Apr. 2016.

"DDGS." *Buying/Selling*. U.S. Grains Council, n.d. Web. 3 Apr. 2016.

"DDGS PRICING." *Commonwealth Agri Energy* -. N.p., n.d. Web. 10 Apr. 2016.

Dore, Charles. "AirLiquide: National Working Party Laboratory Suppliers." *Http://www.airliquide-iupcgases.co.uk*. Warwick University, n.d. Web.

Duffy, Louise E. A Novel Fermenter Design For The 'In Situ' Extraction Of Acetone And Butanol. Diss. Imperial College London, 1988. Print.

Durre, Peter. "Handbook on Clostridia." *Google Books*. Taylor & Francis Group, 2005. Web.

Energy and Mass Balance Model. Rep. PDF.

Enhanced Abe Fermentation With High Yielding Butanol Tolerant Clostridium Strains. Cobalt Technologies Inc, assignee. Patent GB 2459756 B. 9 Apr. 2009.

Ezeji, T. C., N. Qureshi, and H. P. Blaschek. "Acetone Butanol Ethanol (ABE) Production from Concentrated Substrate Reduction in Substrate Inhibition by Fed-batch Technique and Product Inhibition by Gas Stripping." Appl Microbiol Biotechnol 63 (2004): 653-58. PDF.

Ezeji, T.C., N. Qureshi, and H.P. Blaschek. "Continuous Butanol Fermentation and Feed Starch Retrogradation: Butanol Fermentation Sustainability Using Clostridium Beijerinckii BA101." *Continuous Butanol Fermentation and Feed Starch Retrogradation: Butanol Fermentation Sustainability Using Clostridium Beijerinckii BA101*. Journal of Biotechnology, 23 Aug. 2004. Web.

Ezeji, Thaddeus, Nasib Qureshi, and Hans P. Blaschek. "Production of Acetone–butanol–ethanol (ABE) in a Continuous Flow Bioreactor Using Degermed Corn and Clostridium Beijerinckii." *Process Biochemistry* 42 (2007): 34-39. Web.

Formanek, Joseph, Roderick Mackie, and Hans Blaschek. "Enhanced Butanol Production by Clostridium Beijerinckii BA101 Grown in Semidefined P2 Medium Containing 6 Percent Maltodextrin or Glucose." *Applied and Environmental Microbiology* 63.6 (1997): 2306-310. Print.

Fountain, Henry. "Corn Ethanol Makers Weigh Switch to Butanol." *The New York Times*. The New York Times Company, 23 Oct. 2012. Web. 10 Feb. 2016.

"Global Acetone Market to Increased Consumption at a CAGR of 3% During-2020." MRRSE, n.d. Web. 3 Apr. 2016.

Grimaldi, Joseph. "The Search for Environmentally Friendly Energy: Ethanol vs. Butanol." *ChEnnected*. American Institute of Chemical Engineers, 14 Nov. 2011. Web. 10 Feb. 2016.

Heady, Robert E., and Jeffrey R. Frankiewicz. Production of Butanol by a Continuous Fermentation Process. Cpc International Inc., assignee. Patent US 4520104 A. 28 May 1985. Print.

How an Ethanol Plant Works. Ethanol. Web. 31 Jan. 2016.

"Import Data and Price of MESITYLENE | Zauba." *Import Data and Price of MESITYLENE | Zauba*. N.p., n.d. Web. 10 Apr. 2016.

“Intelligen, Inc.: Disposables in Bioprocessing, Corn to Ethanol Conversion, Biodiesel Production, Bioprocess Simulation Papers, Batch Process Simulation Papers, Water Pufication and Wastewater Treatment Papers." *Modeling the Process and Costs of Fuel Ethanol Production by the Corn Dry-Grind Process*. N.p., n.d. Web. 07 Apr. 2016.

"INTEREST RATES AND PRICES." *Government*. N.p., n.d. Web. 10 Apr. 2016.

Jain, Mahendra K., Daniel Beacom, and Rathin Datta. Mutant Strain of C. Acetobutylicum and Process for Making Butanol. Michigan Biotechnology Institute, assignee. Patent US 5192673 A. 9 Mar. 1993. Print.

"Karr Columns." KMPS. Koch Modular Process Systems, LLC. Web. 31 Mar. 2016. Web.

Kraemer, Korbinian, Andreas Harwardt, Ron Bronneberg, and Wolgang Marquardt. "Separation of Butanol from Acetone-butanol-ethanol Fermentation by a Hybrid Extraction-distillation Process." 20th European Symposium on Computer Aided Process Engineering (2010). Aachen University. Web. 15 Feb. 2016. PDF.

Kram, Jerry W. "Researchers, Companies Pursue Biobutanol." *Biomass Magazine*. BBI International, n.d. Web. 3 Apr. 2016.

Kwiatkowski, John R., Andrew J. McAloon, Frank Taylor, and David B. Johnston. "Modeling the Process and Costs of Fuel Ethanol Production by the Corn Dry-grind Process." *Science Direct*. USDA: Industrial Crops and Products Journal, n.d. Web. 19 Jan. 2016.

Lane, Jim. "RIP Cobalt Technologies Or...How Commercializing Butanol Technology Is Like Riding the Tour De France." *Biofuels Digest*. Biofuels Digest, 24 June 2015. Web. 07 Apr. 2016.

Lee, Joungmin, Yu-Sin Jang Jang, Sung Jun Choi, Jung Ae Im, Hyohak Song, Jung Hee Cho, Do Young Seung, E. Terry Papoutsakis, George N. Bennett, and Sang Yup Lee. "Metabolic Engineering of Clostridium Acetobutylicum ATCC 824 for Isopropanol-Butanol-Ethanol Fermentation." Applied and Environmental Microbiology (2012): 1416-423. Aem.asm.org. Web. 21 Jan. 2016. PDF.

Levy, Sidney. Continuous Process for Producing N-butanol Employing Anaerobic Fermentation. Sidney Levy, assignee. Patent US 4424275 A. 3 Jan. 1984. Print.

Liao, Chen, Seung-Oh Seo, Venhar Celik, Huaiwei Liu, Wentao Kong, Yi Wang, Hans Blaschek, Yong-Su Jin, and Ting Lu. "Integrated, Systems Metabolic Picture of Acetone-butanol-ethanol Fermentation by Clostridium Acetobutylicum." PNAS, n.d. Web. 13 Feb. 2016.

Liu, Jiahong, May Wu, and Michael Wang. "Simulation of the Process for Producing Butanol from Corn Fermentation." Ind. Eng. Chem. Res. 48 (2009): 5551-557. Web. 31 Jan. 2016.

Mansur, Marcelo C., Maclyn K. O'Donnell, and Matthew S. Rehmann. ABE Fermentation of Sugar in Brazil. Rep. 2010 PDF.

Marine, Mitchell. *Mass Balance and the Quest for Yield*. N.p.: Novozymes North America, Inc, 8 July 2009. PDF.

McAloon, Andrew, Frank Taylor, Winnie Yee, Kelly Ibsen, and Robert Wooley. "Determining the Cost of Producing Ethanol from Corn Starch and Lignocellulosic Feedstocks." (2000): n. pag. *National Renewable Energy Laboratory*. USDA and US DOE. Web. 26 Jan. 2016.

Mei, Fan. "Mass and Energy Balance for A Corn-To-Ethanol Plant." Thesis. Washington University, 2006. Mass and Energy Balance for A Corn-To-Ethanol Plant. Web. 23 Jan. 2016. PDF.

Qureshi, Nasib, Thaddeus C. Ezeji, Jennifer Ebener, Bruce S. Dien, Michael A. Cotta, and Hans P. Blaschek. "Butanol Production by Clostridium Beijerinckii. Part I: Use of Acid and Enzyme Hydrolyzed Corn Fiber." *Bioresource Technology* 99.13 (2008): 5915-922. *Science Direct*. Web.

Ramey, David Edward. Continuous Two Stage, Dual Path Anaerobic Fermentation of Butanol and Other Organic Solvents Using Two Different Strains of Bacteria. Environmental Energy, Inc., assignee. Patent US 5753474 A. 19 May 1998. Print.

Ramey, David E., and Shang-Tian Yang. "Production of Butyric Acid and Butanol from Biomass." *U.S. Department of Energy* (2005): n. pag. Web.

"Renewable Hydrocarbon Biofuels." *Alternative Fuels Data Center*. U.S. Department of Energy, 13 May 2015. Web. 10 Feb. 2016.

Ristow, Patty, Joseph Foster, and Quirine Ketterings. *LIME GUIDELINES FOR FIELD CROPS* (n.d.): n. pag. Nutrient Management Spear Program. Web.

Schober, Marc. "USDA Cuts Corn Yield, Raises Soybeans." *Farmland Forecast*. Agweb, 11 Sept. 2015. Web. 3 Apr. 2016.

Strombaugh, Tim, Mike Montross, and Kathryn Gray. "Butanol: The New Biofuel." *Cooperative Extension Service*. University of Kentucky, School of Agriculture, 2012. Web. 10 Feb. 2016.

Sulzbacher, Max. Separation of Acetone and Butyl Alcohol from Fermented Mash by Activated Charcoal. Butacet Ltd, assignee. Patent US 2474170 A. 21 June 1949. Print.

Taylor, Frank, Michael J. Kurantz, Neil Goldberg, Andrew J. McAloon, and James C. Craig, Jr. "Dry-Grind Process for Fuel Ethanol by Continuous Fermentation and Stripping." Biotechnology 16 (2000): 541-47. PDF.

"Top 10 Corn Producing Countries." *World Map*. Maps of World, 9 Feb. 2016. Web. 3 Apr. 2016.

USA. Department of Energy. Life-Cycle Assessment of Corn-Based Butanol as a Potential Transportation Fuel. By M. Wu, M. Wang, J. Liu, and H. Huo. 2007. PDF.

USA. National Renewable Energy Laboratory. Energy Efficiency & Renewable Energy. Process Design and Economics for Biochemical Conversion of Lignocellulosic Biomass to Ethanol. By D. Humbird, R. Davis, L. Tao, C. Kinchin, D. Hsu, A. Aden, P. Schoen, J. Lukas, B. Olthof, M. Worley, D. Secton, and D. Dudgeon. PDF.

USA. The Clean Fuels Development Coalition and The Nebraska Ethanol Board in Cooperation with The Department of Agriculture. A Guide of Evaluating the Requirements of Ethanol Plants. PDF.

Usset, Ed. "Corn Prices and Costs." *Corn & Soybean Digest*. Penton, 28 Mar. 2014. Web. 3 Apr. 2016.

Walther, David C., Hendrik J. Meerman, Stacy M. Burns-Guydish, Richard W. Wilson, Eamon T. Hogg, Gregory W. Luli, and Robert Eckert. Integrated System and Process for Bioproduct Production. Cobalt Technologies, Inc., assignee. Patent 8497105. 30 July 2013. Print.

Warner, Ryan E., and Nathan S. Mosler. "Ethanol - Dry Grind Process."*SunGrant BioWeb*. Sun Grant Initiative and the University of Tennessee, 12 Nov. 2008. Web. 15 Feb. 2016.

"What Is Biobutanol?" *BioButanol*. N.p., n.d. Web. 3 Apr. 2016.

Zhou, Haoli, Yi Su, and Yinhua Wan. "Phase Separation of an Acetone-butanol-ethanol (ABE)-Water Mixture in Permeate during Pervaporation of a Dilute ABE Solution." Separation and Purification Technology 132 (2014): 354-61. ScienceDirect. Web. 20 Feb. 2016. PDF.

Appendix A: Sample Calculations

Acid Build-Up

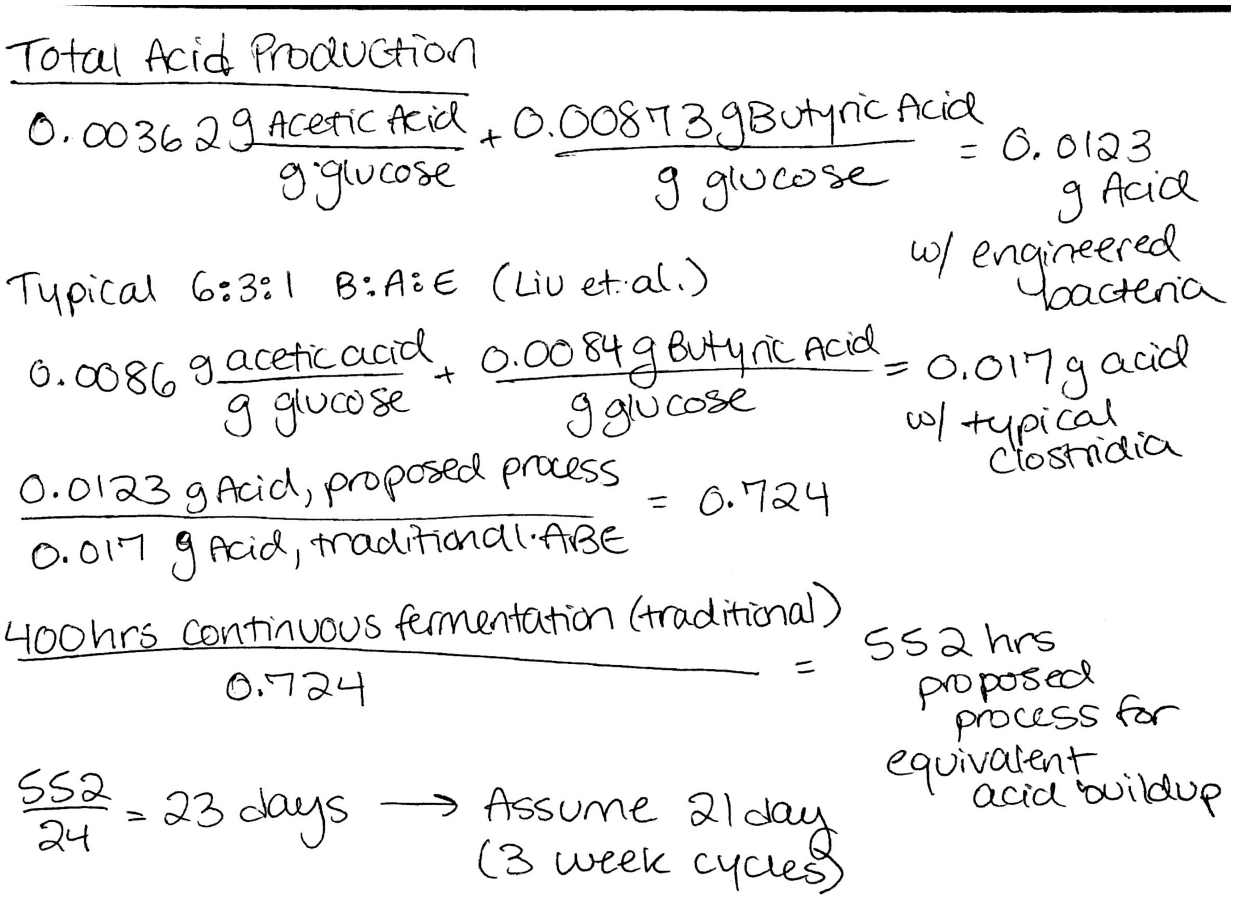

Liquid-Liquid Extractor Sizing

LLE1 Vessel Size

Solvent flowrate= 1663.93 kmol/hr, Heated Broth flowrate=5144.28 kmol/hr
ρ_{sol}=7.17kmol/m^3, ρ_{bro}=5.55 kmol/m^3

The density numbers come from the Aspen reports.

Total Flow rate= 6808.2 kmol/hr, solvent frac of total flow = 0.244, heated broth frac of total flow=0.756, $\rho_{2\ streams}$= $frac_{bro}$ * ρ_{bro} + frac $_{solvent}$ * $\rho_{solvent}$ = 5.944 kmol/m^3

Total m^3/hr= 5.944 kmol/m^3 * 6808.21 kmol/hr = 1145.39 m^3/hr

Total m^3/min = 1145.39 m^3/hr * 1hr/ 60 min = 19.08 m^3/min

Assuming a residence time of 10 min (as was suggested by Dr. Holleran and Mr. Tieri)

Total Volume = 19.08 m^3/min * 10 min = 190.80 m^3

Assuming that the liquids take up 85% of the tank volume, the total tank volume = 224.59 m^3b

Have 10 theoretical stages, but 70 actual ones (this multiplication of 7 was suggested by Prof. Fabiano because LLEs are very inefficient)

Assuming 0.3048 m between each stage and extra space 1.5m on both the top and bottom , height of column = 69* 0.3048 m + 3m = 24.03 m

Diameter,

224. 59 = π * D^2/4 * 24.03, D = 3.45 m

Amount of Solvent Needed Per Year

Solvent Lost from purges = 16.6 + 1.5 = 18.1 kmol/hr

MW solvent = 120.19 kg/kmol, $\rho_{solvent}$ = 865 kg/m^3

18.1 kmol/hr * 120.19 kg/kmol * 24 hrs/ day * 330 days/ yr = 17,267,550 kg = 17,267.55 metric tons

Fermenter Calculations

Calculating Fermenter Volume

$$\text{Volumetric flow rate} = \frac{\text{mass flow (S-REACTOR)}}{\text{density [kg/L]}}$$

$$\frac{\text{Flowrate(volumetric)}}{\text{Volume fermentation broth}} = \text{Dilution rate} = 0.031\ hr^{-1}$$ (US patent)

$$\text{Volume fermentation broth} = \frac{\text{volumetric flow rate}}{0.031\ hr^{-1}} = 5,217\ m^3$$

Recommended that fermentation broth only takes up 70% of working volume to leave room for gas production:

$$\text{Total volume needed} = \frac{5,217\ m^3}{0.7} = 7,452\ m^3$$

- Mr. Vrana suggested that the plant has 4 fermenters
  - ↳ Total volume of fermenters, from existing plant guidelines = $10,451\ m^3$

$$\frac{10,451\ m^3}{4} = 2,613\ m^3/\text{fermenter}$$

$$3\ \text{fermenters} \times \frac{2,613\ m^3}{\text{fermenter}} = 7,838\ m^3$$

$$\% \text{ working volume filled} = \frac{5,217\ m^3\ \text{fermentation broth}}{7,838\ m^3\ \text{fermenter volume}}$$

66.6% of working volume is filled using three fermenters

S-Reactor Calculations

Calculations for S-Reactor

- assume all starch either consumed by bacteria for cell growth or reaction
- relevant reactions: 1kg starch + .11kg H_2O → 1.11kg glucose
  - ↳ all reactions in stoichiometric matrix

WATER

$$\text{S-REACTOR} = \left[\frac{\text{kg water}}{\text{hr}}(\text{S-136})\right] - .11\frac{\text{kg water consumed}}{\text{kg starch consumed}}\left[\frac{\text{kg starch}}{\text{hr}}(\text{S-136})\right]$$

$$\frac{0.0564\text{g } H_2O \text{ produced}}{\text{g glucose consumed}} \times \frac{1.11\text{g glucose}}{\text{g starch}} \times \left[\frac{\text{kg starch}}{\text{hr}}(\text{S-136})\right] \times \frac{.951\text{ water}}{\text{kg starch}}$$

.951 was the recommended glucose utilization rate

CO_2

$$\text{S-REACTOR} = \frac{1.11\text{kg glucose}}{\text{kg starch}} \times \left[\frac{\text{kg starch}}{\text{hr}}(\text{S-136})\right] \times 0.951 \times \frac{0.5362\text{kg } CO_2}{\text{kg glucose}}$$

Ethanol

$$\text{S-REACTOR} = \frac{1.11\text{kg glucose}}{\text{kg starch}} \times \left[\frac{\text{kg starch}}{\text{hr}}(\text{S-136})\right] \times 0.951 \times \frac{0.005432\text{ kg ethanol}}{\text{kg glucose}}$$

Acetone

$$\text{S-REACTOR} = \frac{1.11\text{kg glucose}}{\text{kg starch}} \times \left[\frac{\text{kg starch}}{\text{hr}}(\text{S-136})\right] \times 0.951 \times \frac{0.06518\text{ kg acetone}}{\text{kg glucose}}$$

Butanol

$$\text{S-REACTOR} = \frac{1.11\text{kg glucose}}{\text{kg starch}} \times \left[\frac{\text{kg starch}}{\text{hr}}(\text{S-136})\right] \times 0.951 \times \frac{0.3150\text{kg butanol}}{\text{kg glucose}}$$

Clostridia

- assumed 2g/L (Dr. Wattenbarger)

$$\text{S-REACTOR} = \frac{\text{sum(all other components in stream)}\left[\frac{\text{kg}}{\text{hr}}\right]}{\text{density [kg/L]}} \times 2\text{g/L} \times \frac{1\text{kg bacteria}}{1000\text{g}}$$

Nutrients

$(0.75\ g/L\ KH_2PO_4 + 0.75\ g/L\ K_2HPO_4 + 0.348\ g/L\ MgSO_4 + 0.01\ g/L\ MnSO_4 \cdot H_2O + 0.01\ g/L\ FeSO_4 \cdot 7H_2O + 1\ g/L\ NaCl + 2\ g/L\ \text{asparagine} + 5\ g/L\ \text{yeast extract} + 2\ g/L\ (NH_4)_2SO_4 + 50\ g/L\ \text{glucose}) \times \frac{1\ kg}{1000\ g} = \frac{kg}{L}$

$\left[\frac{kg\ \text{nutrients}}{L}\right] \times \frac{\text{sum(all other components}\ [\frac{kg}{hr}])}{\text{density}\ [kg/L]} = \frac{kg}{hr}$ nutrients in S-REACTOR

Acetic Acid

- acetic acid/acetone is assumed to be produced at ratio 0.0555 g aceticacid/g acetone (US Patent)

$$\text{S-REACTOR} = 1.11\ \frac{kg\ \text{glucose}}{kg\ \text{starch}} \times \left[\frac{kg\ \text{starch}}{hr}\ (\text{S-136})\right] \times 0.951 \times 0.003616\ \frac{kg\ \text{acetic acid}}{kg\ \text{glucose}}$$

Butyric Acid

- ratio assumed to be $0.0277\ \frac{g\ \text{butyric acid}}{g\ \text{butanol}}$

$$\text{S-REACTOR} = 1.11\ \frac{kg\ \text{glucose}}{kg\ \text{starch}} \times \left[\frac{kg\ \text{starch}}{hr}\ (\text{S-136})\right] \times 0.951 \times 0.00873\ \frac{kg\ \text{butyric acid}}{kg\ \text{glucose}}$$

Hydrogen

$$\text{S-REACTOR} = 1.11\ \frac{kg\ \text{glucose}}{kg\ \text{starch}} \times \left[\frac{kg\ \text{starch}}{hr}\ (\text{S-136})\right] \times 0.951 \times 0.009587\ \frac{kg\ \text{Hydrogen}}{kg\ \text{glucose}}$$

* the ratios for $\frac{kg\ \text{product}}{kg\ \text{glucose}}$ were found from the stoichiometric matrix included below

* $0.951 = \frac{kg\ \text{glucose reacted}}{kg\ \text{glucose in stream}}$

Cost of Nitrogen

Cost of Nitrogen

$\frac{1}{3}$(total volume of start-up fermenters) = 555.55 m^3

- assumed 575 m^3 sufficient × 3 so there is enough to cycle through for 21 hour start-up

$\frac{52}{3}$ = # startups/year = 17.33

Volume needed = 575 m^3 × 3 × 17.33 $\frac{\text{startups}}{\text{year}}$ = 29,900 m^3

29,900 m^3 N_2 × $\frac{\$6.58}{m^3}$ = \$196,742/year

29,900 m^3 N_2 × $\frac{1 \text{ tank}}{9 m^3}$ × $\frac{\$3.35}{\text{tank}}$ = \$11,129.44/year

Total annual cost N_2 = \$196,742 + \$11,129.44

\$207,871.44/year N_2

Cost of mesitylene for start-up

Amount mesitylene in both recycle loops × 6 hrs × $\frac{\$2.80}{\text{kg mesitylene}}$

S-SOLVEREC = 199,982.8 $\frac{kg}{hr}$ mesitylene

S-MESITYLE = 18,028.5 $\frac{kg}{hr}$ mesitylene

Total (kg/hr) = 218,011.3 $\frac{kg}{hr}$ 218,011.3 $\frac{kg}{hr}$ × 6 hr × $\frac{\$2.80}{kg}$ = \$

investment = \$3,662,590

(treated as a catalyst)

Value of existing ethanol plant

- Sell at \$1.00/gal capacity (new plant \$2/gal)

40MM gpy ethanol plant × $\frac{\$1.00}{gal}$ = **\$40,000,000 investment**

Appendix B: ASPEN Input Summary, Block Reports, and Stream Reports

Heat Exchanger, HX 101: Input Summary, Block Report, and Stream Report

```
;
;Input Summary created by Aspen Plus Rel. 34.0 at 22:43:41 Sun Apr 10, 2016
;Directory \\base\root\homedir  Filename C:\Users\shaulson\AppData\Local\Temp\~apfebb.txt
;


DYNAMICS
    DYNAMICS RESULTS=ON

IN-UNITS MET PRESSURE=bar TEMPERATURE=C DELTA-T=C PDROP=bar  &
        INVERSE-PRES='1/bar'

DEF-STREAMS CONVEN ALL

MODEL-OPTION

DATABANKS 'APV88 PURE32' / 'APV88 AQUEOUS' / 'APV88 SOLIDS' /  &
        'APV88 INORGANIC' / 'APEOSV88 AP-EOS' / NOASPENPCD

PROP-SOURCES 'APV88 PURE32' / 'APV88 AQUEOUS' / 'APV88 SOLIDS' &
         / 'APV88 INORGANIC' / 'APEOSV88 AP-EOS'

COMPONENTS
    WATER H2O

SOLVE
    RUN-MODE MODE=SIM

FLOWSHEET
    BLOCK B1 IN=S3 S1 OUT=S4 S2

PROPERTIES NRTL

STREAM S1
    SUBSTREAM MIXED TEMP=25. PRES=1.
    MASS-FLOW WATER 36106.

STREAM S3
    SUBSTREAM MIXED TEMP=100.31 PRES=4.18
    MASS-FLOW WATER 127428.

BLOCK B1 HEATX
    PARAM T-HOT=87. MIN-TAPP=10.
    FEEDS HOT=S3 COLD=S1
    OUTLETS-HOT S4
    OUTLETS-COLD S2
    HOT-SIDE DPPARMOPT=NO
    COLD-SIDE DPPARMOPT=NO
    TQ-PARAM CURVE=YES

DESIGN-SPEC DS-1
    DEFINE TEMP STREAM-VAR STREAM=S2 SUBSTREAM=MIXED  &
        VARIABLE=TEMP UOM="C"
    SPEC "TEMP" TO "77"
    TOL-SPEC "0.01"
    VARY STREAM-VAR STREAM=S1 SUBSTREAM=MIXED VARIABLE=MASS-FLOW  &
        UOM="kg/hr"
    LIMITS "0" "50000"

EO-CONV-OPTI

STREAM-REPOR MOLEFLOW

DISABLE
    DESIGN-SPEC DS-1
```

```
;
;
;
;
;
```

```
 BLOCK:  B1       MODEL: HEATX
 ------------------------------
   HOT SIDE:
   ---------
   INLET STREAM:             S3
   OUTLET STREAM:            S4
   PROPERTY OPTION SET:   NRTL      RENON (NRTL) / IDEAL GAS
   COLD SIDE:
   ----------
   INLET STREAM:             S1
   OUTLET STREAM:            S2
   PROPERTY OPTION SET:   NRTL      RENON (NRTL) / IDEAL GAS

                      ***  MASS AND ENERGY BALANCE  ***
                                    IN               OUT        RELATIVE DIFF.
    TOTAL BALANCE
       MOLE(KMOL/HR )            9077.52          9077.52          0.00000
       MASS(KG/HR   )            163534.          163534.          0.00000
       ENTHALPY(CAL/SEC )     -0.169381E+09    -0.169381E+09    -0.175948E-15

                      ***  CO2 EQUIVALENT SUMMARY ***
    FEED STREAMS CO2E             0.00000      KG/HR
    PRODUCT STREAMS CO2E          0.00000      KG/HR
    NET STREAMS CO2E PRODUCTION   0.00000      KG/HR
    UTILITIES CO2E PRODUCTION     0.00000      KG/HR
    TOTAL CO2E PRODUCTION         0.00000      KG/HR

                         ***  INPUT DATA  ***

   FLASH SPECS FOR HOT SIDE:
   TWO    PHASE      FLASH
   MAXIMUM NO. ITERATIONS                                    30
   CONVERGENCE TOLERANCE                                      0.000100000

   FLASH SPECS FOR COLD SIDE:
   TWO    PHASE      FLASH
   MAXIMUM NO. ITERATIONS                                    30
   CONVERGENCE TOLERANCE                                      0.000100000

   FLOW DIRECTION AND SPECIFICATION:
     COUNTERCURRENT   HEAT EXCHANGER
     SPECIFIED HOT OUTLET TEMP
     SPECIFIED VALUE               C                         87.0000
     LMTD CORRECTION FACTOR                                     1.00000

   PRESSURE SPECIFICATION:
     HOT  SIDE PRESSURE DROP       BAR                        0.0000
     COLD SIDE PRESSURE DROP       BAR                        0.0000

   HEAT TRANSFER COEFFICIENT SPECIFICATION:
     HOT LIQUID    COLD LIQUID     CAL/SEC-SQCM-K             0.0203
     HOT 2-PHASE   COLD LIQUID     CAL/SEC-SQCM-K             0.0203
     HOT VAPOR     COLD LIQUID     CAL/SEC-SQCM-K             0.0203
     HOT LIQUID    COLD 2-PHASE    CAL/SEC-SQCM-K             0.0203
     HOT 2-PHASE   COLD 2-PHASE    CAL/SEC-SQCM-K             0.0203
     HOT VAPOR     COLD 2-PHASE    CAL/SEC-SQCM-K             0.0203
     HOT LIQUID    COLD VAPOR      CAL/SEC-SQCM-K             0.0203
     HOT 2-PHASE   COLD VAPOR      CAL/SEC-SQCM-K             0.0203
     HOT VAPOR     COLD VAPOR      CAL/SEC-SQCM-K             0.0203

                          ***  OVERALL RESULTS  ***

   STREAMS:
                   ---------------------------------------
                   |                                     |
   S3        ----->|                HOT                  |-----> S4
   T=  1.0031D+02  |                                     |       T=  8.7000D+01
   P=  4.1800D+00  |                                     |       P=  4.1800D+00
   V=  0.0000D+00  |                                     |       V=  0.0000D+00
                   |                                     |
   S2        <-----|                COLD                 |<----- S1
   T=  7.4998D+01  |                                     |       T=  2.5000D+01
   P=  1.0000D+00  |                                     |       P=  1.0000D+00
   V=  0.0000D+00  |                                     |       V=  0.0000D+00
```

```
                    ------------------------------------

  DUTY AND AREA:
    CALCULATED HEAT DUTY            CAL/SEC              507031.3670
    CALCULATED (REQUIRED) AREA      SQM                      60.9839
    ACTUAL EXCHANGER AREA           SQM                      60.9839
    PER CENT OVER-DESIGN                                      0.0000

  HEAT TRANSFER COEFFICIENT:
    AVERAGE COEFFICIENT (DIRTY)     CAL/SEC-SQCM-K            0.0203
    UA (DIRTY)                      CAL/SEC-K             12380.8911

  LOG-MEAN TEMPERATURE DIFFERENCE:
    LMTD CORRECTION FACTOR                                    1.0000
    LMTD (CORRECTED)                C                        40.9527
    NUMBER OF SHELLS IN SERIES                                1

  PRESSURE DROP:
    HOTSIDE, TOTAL                  BAR                       0.0000
    COLDSIDE, TOTAL                 BAR                       0.0000

                          ***  ZONE RESULTS  ***

  TEMPERATURE LEAVING EACH ZONE:

                                    HOT
          ------------------------------------------------------------
          |                                                          |
HOT IN    |                             LIQ                          | HOT OUT
------>   |                                                          |------>
 100.3    |                                                          |   87.0
          |                                                          |
COLDOUT   |                             LIQ                          | COLDIN
<------   |                                                          |<------
  75.0    |                                                          |   25.0
          |                                                          |
          ------------------------------------------------------------
                                    COLD

  ZONE HEAT TRANSFER AND AREA:

  ZONE       HEAT DUTY       AREA       LMTD       AVERAGE U       UA
             CAL/SEC         SQM         C         CAL/SEC-SQCM-K  CAL/SEC-K
    1     507031.367        60.9839      40.9527     0.0203       12380.8911

HEATX COLD-TQCU B1       TQCURV INLET
-------------------------------------
  PRESSURE PROFILE:      CONSTANT2
  PRESSURE DROP:         0.0         BAR
  PROPERTY OPTION SET:   NRTL      RENON (NRTL) / IDEAL GAS

-----------------------------------------------------
!  DUTY      !  PRES      !  TEMP      !  VFRAC     !
!            !            !            !            !
!            !            !            !            !
!            !            !            !            !
!  CAL/SEC   !  BAR       !  C         !            !
!            !            !            !            !
!============!============!============!============!
!     0.0    !     1.0000 !    74.9984 !     0.0    !
!  2.4144+04 !     1.0000 !    72.6888 !     0.0    !
!  4.8289+04 !     1.0000 !    70.3712 !     0.0    !
!  7.2433+04 !     1.0000 !    68.0459 !     0.0    !
!  9.6577+04 !     1.0000 !    65.7130 !     0.0    !
!------------+------------+------------+------------!
!  1.2072+05 !     1.0000 !    63.3725 !     0.0    !
!  1.4487+05 !     1.0000 !    61.0246 !     0.0    !
!  1.6901+05 !     1.0000 !    58.6693 !     0.0    !
!  1.9315+05 !     1.0000 !    56.3069 !     0.0    !
!  2.1730+05 !     1.0000 !    53.9374 !     0.0    !
!------------+------------+------------+------------!
!  2.4144+05 !     1.0000 !    51.5610 !     0.0    !
!  2.6559+05 !     1.0000 !    49.1778 !     0.0    !
!  2.8973+05 !     1.0000 !    46.7878 !     0.0    !
!  3.1388+05 !     1.0000 !    44.3914 !     0.0    !
!  3.3802+05 !     1.0000 !    41.9884 !     0.0    !
!------------+------------+------------+------------!
!  3.6217+05 !     1.0000 !    39.5793 !     0.0    !
!  3.8631+05 !     1.0000 !    37.1639 !     0.0    !
!  4.1045+05 !     1.0000 !    34.7426 !     0.0    !
!  4.3460+05 !     1.0000 !    32.3154 !     0.0    !
```

```
!  4.5874+05 !     1.0000 !    29.8824 !     0.0    !
!------------+------------+------------+------------!
!  4.8289+05 !     1.0000 !    27.4439 !     0.0    !
!  5.0703+05 !     1.0000 !    25.0000 !     0.0    !
-----------------------------------------------------

HEATX HOT-TQCUR B1       TQCURV INLET
-------------------------------------
  PRESSURE PROFILE:      CONSTANT2
  PRESSURE DROP:         0.0         BAR
  PROPERTY OPTION SET:   NRTL      RENON (NRTL) / IDEAL GAS

-----------------------------------------------------------
!  DUTY      !  PRES      !  TEMP      !  VFRAC     !
!            !            !            !            !
!            !            !            !            !
!            !            !            !            !
!  CAL/SEC   !  BAR       !  C         !            !
!            !            !            !            !
!============!============!============!============!
!     0.0    !     4.1800 !   100.3100 !     0.0    !
!  2.4144+04 !     4.1800 !    99.6832 !     0.0    !
!  4.8289+04 !     4.1800 !    99.0557 !     0.0    !
!  7.2433+04 !     4.1800 !    98.4276 !     0.0    !
!  9.6577+04 !     4.1800 !    97.7986 !     0.0    !
!------------+------------+------------+------------!
!  1.2072+05 !     4.1800 !    97.1690 !     0.0    !
!  1.4487+05 !     4.1800 !    96.5387 !     0.0    !
!  1.6901+05 !     4.1800 !    95.9077 !     0.0    !
!  1.9315+05 !     4.1800 !    95.2759 !     0.0    !
!  2.1730+05 !     4.1800 !    94.6435 !     0.0    !
!------------+------------+------------+------------!
!  2.4144+05 !     4.1800 !    94.0103 !     0.0    !
!  2.6559+05 !     4.1800 !    93.3765 !     0.0    !
!  2.8973+05 !     4.1800 !    92.7420 !     0.0    !
!  3.1388+05 !     4.1800 !    92.1067 !     0.0    !
!  3.3802+05 !     4.1800 !    91.4708 !     0.0    !
!------------+------------+------------+------------!
!  3.6217+05 !     4.1800 !    90.8342 !     0.0    !
!  3.8631+05 !     4.1800 !    90.1969 !     0.0    !
!  4.1045+05 !     4.1800 !    89.5589 !     0.0    !
!  4.3460+05 !     4.1800 !    88.9202 !     0.0    !
!  4.5874+05 !     4.1800 !    88.2808 !     0.0    !
!------------+------------+------------+------------!
!  4.8289+05 !     4.1800 !    87.6407 !     0.0    !
!  5.0703+05 !     4.1800 !    87.0000 !     0.0    !
-----------------------------------------------------


S1 S2 S3 S4
-----------

STREAM ID               S1         S2         S3         S4
FROM :                  ----       B1         ----       B1
TO   :                  B1         ----       B1         ----

SUBSTREAM: MIXED
PHASE:                   LIQUID     LIQUID     LIQUID     LIQUID
COMPONENTS: KMOL/HR
  WATER                2004.1876  2004.1876  7073.3289  7073.3289
TOTAL FLOW:
  KMOL/HR              2004.1876  2004.1876  7073.3289  7073.3289
  KG/HR                3.6106+04  3.6106+04  1.2743+05  1.2743+05
  L/MIN                 605.4253   637.2501  2313.6003  2278.9114
STATE VARIABLES:
  TEMP   C              25.0000    74.9984   100.3100    87.0000
  PRES   BAR             1.0000     1.0000     4.1800     4.1800
  VFRAC                  0.0        0.0        0.0        0.0
  LFRAC                  1.0000     1.0000     1.0000     1.0000
  SFRAC                  0.0        0.0        0.0        0.0
ENTHALPY:
  CAL/MOL             -6.8262+04 -6.7351+04 -6.6866+04 -6.7124+04
  CAL/GM              -3789.1277 -3738.5734 -3711.6013 -3725.9256
  CAL/SEC             -3.8003+07 -3.7496+07 -1.3138+08 -1.3189+08
ENTROPY:
  CAL/MOL-K             -38.9652   -36.1588   -34.8313   -35.5231
  CAL/GM-K               -2.1629    -2.0071    -1.9334    -1.9718
DENSITY:
  MOL/CC               5.5173-02  5.2418-02  5.0955-02  5.1730-02
  GM/CC                  0.9940     0.9443     0.9180     0.9319
AVG MW                   18.0153    18.0153    18.0153    18.0153
```

Heat Exchanger, 312E: Input Summary, Block Report and Stream Report

```
;
;Input Summary created by Aspen Plus Rel. 34.0 at 22:33:50 Sun Apr 10, 2016
;Directory \\base\root\homedir\SeniorDesign_312E_3  Filename
C:\Users\shaulson\AppData\Local\Temp\~apf977.txt
;


DYNAMICS
    DYNAMICS RESULTS=ON

IN-UNITS MET PRESSURE=bar TEMPERATURE=C DELTA-T=C PDROP=bar  &
        INVERSE-PRES='1/bar'

DEF-STREAMS CONVEN ALL

MODEL-OPTION

DATABANKS 'APV88 PURE32' / 'APV88 AQUEOUS' / 'APV88 SOLIDS' /  &
        'APV88 INORGANIC' / 'APEOSV88 AP-EOS' / NOASPENPCD

PROP-SOURCES 'APV88 PURE32' / 'APV88 AQUEOUS' / 'APV88 SOLIDS' &
         / 'APV88 INORGANIC' / 'APEOSV88 AP-EOS'

COMPONENTS
    WATER H2O

SOLVE
    RUN-MODE MODE=SIM

FLOWSHEET
    BLOCK B1 IN=S3 S1 OUT=S4 S2

PROPERTIES NRTL

STREAM S1
    SUBSTREAM MIXED TEMP=88.81 PRES=4.18
    MOLE-FLOW WATER 149824.

STREAM S3
    SUBSTREAM MIXED TEMP=110. PRES=2.
    MOLE-FLOW WATER 149824.

BLOCK B1 HEATX
    PARAM T-HOT=97.8
    FEEDS HOT=S3 COLD=S1
    OUTLETS-HOT S4
    OUTLETS-COLD S2
    HOT-SIDE DPPARMOPT=NO
    COLD-SIDE DPPARMOPT=NO
    TQ-PARAM CURVE=YES

EO-CONV-OPTI

STREAM-REPOR MOLEFLOW
;
;
;
;
;


 BLOCK:  B1       MODEL: HEATX
 ------------------------------
   HOT SIDE:
   ---------
   INLET STREAM:             S3
   OUTLET STREAM:            S4
   PROPERTY OPTION SET:   NRTL      RENON (NRTL) / IDEAL GAS
   COLD SIDE:
   ----------
   INLET STREAM:             S1
   OUTLET STREAM:            S2
   PROPERTY OPTION SET:   NRTL      RENON (NRTL) / IDEAL GAS

                      ***  MASS AND ENERGY BALANCE  ***
```

```
                                IN              OUT        RELATIVE DIFF.
 TOTAL BALANCE
    MOLE(KMOL/HR )            16633.0         16633.0         0.00000
    MASS(KG/HR   )            299648.         299648.         0.00000
    ENTHALPY(CAL/SEC )      -0.309010E+09   -0.309010E+09   -0.192889E-15

                   ***  CO2 EQUIVALENT SUMMARY ***
 FEED STREAMS CO2E             0.00000      KG/HR
 PRODUCT STREAMS CO2E          0.00000      KG/HR
 NET STREAMS CO2E PRODUCTION   0.00000      KG/HR
 UTILITIES CO2E PRODUCTION     0.00000      KG/HR
 TOTAL CO2E PRODUCTION         0.00000      KG/HR

                       ***  INPUT DATA  ***

FLASH SPECS FOR HOT SIDE:
TWO    PHASE      FLASH
MAXIMUM NO. ITERATIONS                                  30
CONVERGENCE TOLERANCE                                    0.000100000

FLASH SPECS FOR COLD SIDE:
TWO    PHASE      FLASH
MAXIMUM NO. ITERATIONS                                  30
CONVERGENCE TOLERANCE                                    0.000100000

FLOW DIRECTION AND SPECIFICATION:
  COUNTERCURRENT   HEAT EXCHANGER
  SPECIFIED HOT OUTLET TEMP
  SPECIFIED VALUE               C                       97.8000
  LMTD CORRECTION FACTOR                                   1.00000

PRESSURE SPECIFICATION:
  HOT  SIDE PRESSURE DROP       BAR                        0.0000
  COLD SIDE PRESSURE DROP       BAR                        0.0000

HEAT TRANSFER COEFFICIENT SPECIFICATION:
  HOT LIQUID    COLD LIQUID     CAL/SEC-SQCM-K             0.0203
  HOT 2-PHASE   COLD LIQUID     CAL/SEC-SQCM-K             0.0203
  HOT VAPOR     COLD LIQUID     CAL/SEC-SQCM-K             0.0203
  HOT LIQUID    COLD 2-PHASE    CAL/SEC-SQCM-K             0.0203
  HOT 2-PHASE   COLD 2-PHASE    CAL/SEC-SQCM-K             0.0203
  HOT VAPOR     COLD 2-PHASE    CAL/SEC-SQCM-K             0.0203
  HOT LIQUID    COLD VAPOR      CAL/SEC-SQCM-K             0.0203
  HOT 2-PHASE   COLD VAPOR      CAL/SEC-SQCM-K             0.0203
  HOT VAPOR     COLD VAPOR      CAL/SEC-SQCM-K             0.0203

                       ***  OVERALL RESULTS  ***

STREAMS:
                ---------------------------------------
                |                                     |
S3        ----->|                HOT                  |-----> S4
T=  1.1000D+02  |                                     |       T=  9.7800D+01
P=  2.0000D+00  |                                     |       P=  2.0000D+00
V=  0.0000D+00  |                                     |       V=  0.0000D+00
                |                                     |
S2        <-----|                COLD                 |<----- S1
T=  1.0121D+02  |                                     |       T=  8.8810D+01
P=  4.1800D+00  |                                     |       P=  4.1800D+00
V=  0.0000D+00  |                                     |       V=  0.0000D+00
                ---------------------------------------

DUTY AND AREA:
  CALCULATED HEAT DUTY          CAL/SEC             556624.4940
  CALCULATED (REQUIRED) AREA    SQM                    308.3928
  ACTUAL EXCHANGER AREA         SQM                    308.3928
  PER CENT OVER-DESIGN                                   0.0000

HEAT TRANSFER COEFFICIENT:
  AVERAGE COEFFICIENT (DIRTY)   CAL/SEC-SQCM-K            0.0203
  UA (DIRTY)                    CAL/SEC-K            62609.6071

LOG-MEAN TEMPERATURE DIFFERENCE:
  LMTD CORRECTION FACTOR                                 1.0000
  LMTD (CORRECTED)              C                        8.8904
  NUMBER OF SHELLS IN SERIES                              1

PRESSURE DROP:
  HOTSIDE, TOTAL                BAR                      0.0000
  COLDSIDE, TOTAL               BAR                      0.0000
```

*** ZONE RESULTS ***

TEMPERATURE LEAVING EACH ZONE:

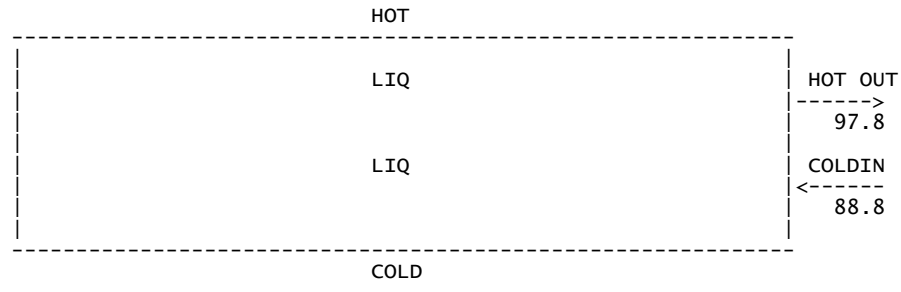

ZONE HEAT TRANSFER AND AREA:

ZONE	HEAT DUTY CAL/SEC	AREA SQM	LMTD C	AVERAGE U CAL/SEC-SQCM-K	UA CAL/SEC-K
1	556624.494	308.3928	8.8904	0.0203	62609.6071

HEATX COLD-TQCU B1 TQCURV INLET

PRESSURE PROFILE: CONSTANT2
PRESSURE DROP: 0.0 BAR
PROPERTY OPTION SET: NRTL RENON (NRTL) / IDEAL GAS

DUTY CAL/SEC	PRES BAR	TEMP C	VFRAC
0.0	4.1800	101.2085	0.0
2.6506+04	4.1800	100.6242	0.0
5.3012+04	4.1800	100.0394	0.0
7.9518+04	4.1800	99.4539	0.0
1.0602+05	4.1800	98.8678	0.0
1.3253+05	4.1800	98.2810	0.0
1.5904+05	4.1800	97.6937	0.0
1.8554+05	4.1800	97.1057	0.0
2.1205+05	4.1800	96.5171	0.0
2.3855+05	4.1800	95.9279	0.0
2.6506+05	4.1800	95.3381	0.0
2.9157+05	4.1800	94.7477	0.0
3.1807+05	4.1800	94.1567	0.0
3.4458+05	4.1800	93.5650	0.0
3.7108+05	4.1800	92.9727	0.0
3.9759+05	4.1800	92.3799	0.0
4.2409+05	4.1800	91.7864	0.0
4.5060+05	4.1800	91.1923	0.0
4.7711+05	4.1800	90.5976	0.0
5.0361+05	4.1800	90.0024	0.0
5.3012+05	4.1800	89.4065	0.0
5.5662+05	4.1800	88.8100	0.0

HEATX HOT-TQCUR B1 TQCURV INLET

PRESSURE PROFILE: CONSTANT2
PRESSURE DROP: 0.0 BAR
PROPERTY OPTION SET: NRTL RENON (NRTL) / IDEAL GAS

DUTY CAL/SEC	PRES BAR	TEMP C	VFRAC
0.0	2.0000	110.0000	0.0

```
!  2.6506+04 !     2.0000 !   109.4254 !     0.0    !
!  5.3012+04 !     2.0000 !   108.8502 !     0.0    !
!  7.9518+04 !     2.0000 !   108.2743 !     0.0    !
!  1.0602+05 !     2.0000 !   107.6978 !     0.0    !
!-----------+-----------+-----------+-----------!
!  1.3253+05 !     2.0000 !   107.1206 !     0.0    !
!  1.5904+05 !     2.0000 !   106.5428 !     0.0    !
!  1.8554+05 !     2.0000 !   105.9644 !     0.0    !
!  2.1205+05 !     2.0000 !   105.3853 !     0.0    !
!  2.3855+05 !     2.0000 !   104.8056 !     0.0    !
!-----------+-----------+-----------+-----------!
!  2.6506+05 !     2.0000 !   104.2253 !     0.0    !
!  2.9157+05 !     2.0000 !   103.6443 !     0.0    !
!  3.1807+05 !     2.0000 !   103.0627 !     0.0    !
!  3.4458+05 !     2.0000 !   102.4805 !     0.0    !
!  3.7108+05 !     2.0000 !   101.8976 !     0.0    !
!-----------+-----------+-----------+-----------!
!  3.9759+05 !     2.0000 !   101.3141 !     0.0    !
!  4.2409+05 !     2.0000 !   100.7300 !     0.0    !
!  4.5060+05 !     2.0000 !   100.1452 !     0.0    !
!  4.7711+05 !     2.0000 !    99.5598 !     0.0    !
!  5.0361+05 !     2.0000 !    98.9739 !     0.0    !
!-----------+-----------+-----------+-----------!
!  5.3012+05 !     2.0000 !    98.3872 !     0.0    !
!  5.5662+05 !     2.0000 !    97.8000 !     0.0    !
-----------------------------------------------------


 S1 S2 S3 S4
 -----------

 STREAM ID               S1         S2         S3         S4
 FROM :                  ----       B1         ----       B1
 TO   :                  B1         ----       B1         ----

 SUBSTREAM: MIXED
 PHASE:                  LIQUID     LIQUID     LIQUID     LIQUID
 COMPONENTS: KMOL/HR
   WATER                8316.4958  8316.4958  8316.4958  8316.4958
 TOTAL FLOW:
   KMOL/HR              8316.4958  8316.4958  8316.4958  8316.4958
   KG/HR                1.4982+05  1.4982+05  1.4982+05  1.4982+05
   L/MIN                2684.8697  2723.0517  2751.2256  2712.3794
 STATE VARIABLES:
   TEMP   C               88.8100   101.2085   110.0000    97.8000
   PRES   BAR              4.1800     4.1800     2.0000     2.0000
   VFRAC                   0.0        0.0        0.0        0.0
   LFRAC                   1.0000     1.0000     1.0000     1.0000
   SFRAC                   0.0        0.0        0.0        0.0
 ENTHALPY:
   CAL/MOL             -6.7089+04 -6.6848+04 -6.6674+04 -6.6915+04
   CAL/GM              -3723.9969 -3710.6222 -3700.9536 -3714.3283
   CAL/SEC             -1.5498+08 -1.5443+08 -1.5403+08 -1.5458+08
 ENTROPY:
   CAL/MOL-K             -35.4282   -34.7850   -34.3352   -34.9608
   CAL/GM-K               -1.9666    -1.9309    -1.9059    -1.9406
 DENSITY:
   MOL/CC               5.1626-02  5.0902-02  5.0381-02  5.1102-02
   GM/CC                   0.9301     0.9170     0.9076     0.9206
 AVG MW                   18.0153    18.0153    18.0153    18.0153
```

Heat Exchanger, 313E: Input Summary, Block Report and Stream Report

```
;
;Input Summary created by Aspen Plus Rel. 34.0 at 22:30:34 Sun Apr 10, 2016
;Directory \\base\root\homedir\SeniorDesign_New313E  Filename
C:\Users\shaulson\AppData\Local\Temp\~apfc08.txt
;


DYNAMICS
    DYNAMICS RESULTS=ON

IN-UNITS MET PRESSURE=bar TEMPERATURE=C DELTA-T=C PDROP=bar  &
        INVERSE-PRES='1/bar'
```

```
DEF-STREAMS CONVEN ALL

MODEL-OPTION

DATABANKS 'APV88 PURE32' / 'APV88 AQUEOUS' / 'APV88 SOLIDS' /  &
        'APV88 INORGANIC' / 'APEOSV88 AP-EOS' / NOASPENPCD

PROP-SOURCES 'APV88 PURE32' / 'APV88 AQUEOUS' / 'APV88 SOLIDS' &
         / 'APV88 INORGANIC' / 'APEOSV88 AP-EOS'

COMPONENTS
    WATER H2O /
    STEAM H2O

SOLVE
    RUN-MODE MODE=SIM

FLOWSHEET
    BLOCK 313E IN=S3 S1 OUT=S4 S2

PROPERTIES IDEAL

STREAM S1
    SUBSTREAM MIXED TEMP=101.01 PRES=4.18
    MASS-FLOW WATER 149284.

STREAM S3
    SUBSTREAM MIXED TEMP=350. <F> PRES=125. <psig>
    MASS-FLOW WATER 50000.

BLOCK 313E HEATX
    PARAM T-COLD=110.
    FEEDS HOT=S3 COLD=S1
    OUTLETS-HOT S4
    OUTLETS-COLD S2
    HOT-SIDE DPPARMOPT=NO
    COLD-SIDE DPPARMOPT=NO
    TQ-PARAM CURVE=YES

EO-CONV-OPTI

STREAM-REPOR MOLEFLOW
;
;
;
;
;


 BLOCK:  313E     MODEL: HEATX
 ------------------------------
   HOT SIDE:
   ---------
   INLET STREAM:             S3
   OUTLET STREAM:            S4
   PROPERTY OPTION SET:   IDEAL     IDEAL LIQUID / IDEAL GAS
   COLD SIDE:
   ----------
   INLET STREAM:             S1
   OUTLET STREAM:            S2
   PROPERTY OPTION SET:   IDEAL     IDEAL LIQUID / IDEAL GAS

                      ***  MASS AND ENERGY BALANCE  ***
                                   IN              OUT        RELATIVE DIFF.
    TOTAL BALANCE
       MOLE(KMOL/HR )            11061.9         11061.9         0.00000
       MASS(KG/HR   )            199284.         199284.         0.00000
       ENTHALPY(CAL/SEC )     -0.204174E+09   -0.204174E+09    0.145965E-15

                      ***  CO2 EQUIVALENT SUMMARY ***
    FEED STREAMS CO2E             0.00000      KG/HR
```

```
 PRODUCT STREAMS CO2E          0.00000      KG/HR
 NET STREAMS CO2E PRODUCTION   0.00000      KG/HR
 UTILITIES CO2E PRODUCTION     0.00000      KG/HR
 TOTAL CO2E PRODUCTION         0.00000      KG/HR

                      ***  INPUT DATA  ***

FLASH SPECS FOR HOT SIDE:
TWO    PHASE      FLASH
MAXIMUM NO. ITERATIONS                                  30
CONVERGENCE TOLERANCE                                    0.000100000

FLASH SPECS FOR COLD SIDE:
TWO    PHASE      FLASH
MAXIMUM NO. ITERATIONS                                  30
CONVERGENCE TOLERANCE                                    0.000100000

FLOW DIRECTION AND SPECIFICATION:
  COUNTERCURRENT   HEAT EXCHANGER
  SPECIFIED COLD OUTLET TEMP
  SPECIFIED VALUE               C                      110.0000
  LMTD CORRECTION FACTOR                                 1.00000

PRESSURE SPECIFICATION:
  HOT  SIDE PRESSURE DROP       BAR                      0.0000
  COLD SIDE PRESSURE DROP       BAR                      0.0000

HEAT TRANSFER COEFFICIENT SPECIFICATION:
  HOT LIQUID    COLD LIQUID     CAL/SEC-SQCM-K           0.0203
  HOT 2-PHASE   COLD LIQUID     CAL/SEC-SQCM-K           0.0203
  HOT VAPOR     COLD LIQUID     CAL/SEC-SQCM-K           0.0203
  HOT LIQUID    COLD 2-PHASE    CAL/SEC-SQCM-K           0.0203
  HOT 2-PHASE   COLD 2-PHASE    CAL/SEC-SQCM-K           0.0203
  HOT VAPOR     COLD 2-PHASE    CAL/SEC-SQCM-K           0.0203
  HOT LIQUID    COLD VAPOR      CAL/SEC-SQCM-K           0.0203
  HOT 2-PHASE   COLD VAPOR      CAL/SEC-SQCM-K           0.0203
  HOT VAPOR     COLD VAPOR      CAL/SEC-SQCM-K           0.0203

                      ***  OVERALL RESULTS  ***

STREAMS:
                ---------------------------------------
                |                                     |
S3        ----->|                HOT                  |-----> S4
T=  1.7667D+02  |                                     |       T=  1.5328D+02
P=  9.6317D+00  |                                     |       P=  9.6317D+00
V=  0.0000D+00  |                                     |       V=  0.0000D+00
                |                                     |
S2        <-----|                COLD                 |<----- S1
T=  1.1000D+02  |                                     |       T=  1.0101D+02
P=  4.1800D+00  |                                     |       P=  4.1800D+00
V=  0.0000D+00  |                                     |       V=  0.0000D+00
                ---------------------------------------

DUTY AND AREA:
  CALCULATED HEAT DUTY          CAL/SEC             409908.5087
  CALCULATED (REQUIRED) AREA    SQM                     34.1207
  ACTUAL EXCHANGER AREA         SQM                     34.1207
  PER CENT OVER-DESIGN                                   0.0000

HEAT TRANSFER COEFFICIENT:
  AVERAGE COEFFICIENT (DIRTY)   CAL/SEC-SQCM-K           0.0203
  UA (DIRTY)                    CAL/SEC-K            6927.1556

LOG-MEAN TEMPERATURE DIFFERENCE:
  LMTD CORRECTION FACTOR                                 1.0000
  LMTD (CORRECTED)              C                       59.1741
  NUMBER OF SHELLS IN SERIES                              1

PRESSURE DROP:
  HOTSIDE, TOTAL                BAR                      0.0000
  COLDSIDE, TOTAL               BAR                      0.0000
```

*** ZONE RESULTS ***

TEMPERATURE LEAVING EACH ZONE:

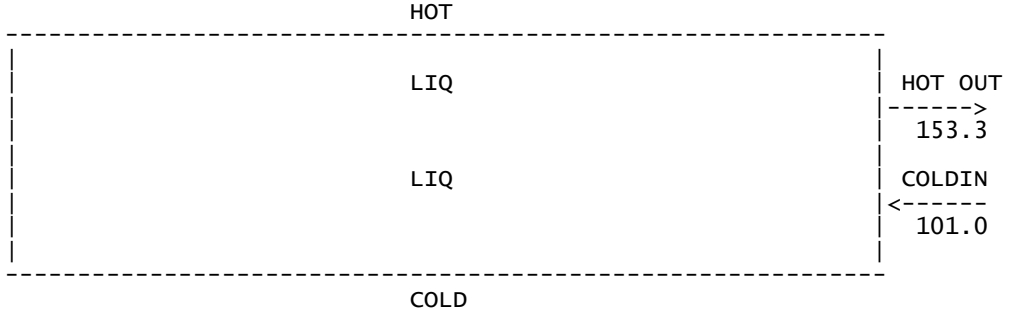

ZONE HEAT TRANSFER AND AREA:

ZONE	HEAT DUTY CAL/SEC	AREA SQM	LMTD C	AVERAGE U CAL/SEC-SQCM-K	UA CAL/SEC-K
1	409908.509	34.1207	59.1741	0.0203	6927.1556

HEATX COLD-TQCU 313E TQCURV INLET

PRESSURE PROFILE: CONSTANT2
PRESSURE DROP: 0.0 BAR
PROPERTY OPTION SET: IDEAL IDEAL LIQUID / IDEAL GAS

DUTY CAL/SEC	PRES BAR	TEMP C	VFRAC
0.0	4.1800	110.0000	0.0
1.9519+04	4.1800	109.5754	0.0
3.9039+04	4.1800	109.1504	0.0
5.8558+04	4.1800	108.7251	0.0
7.8078+04	4.1800	108.2995	0.0
9.7597+04	4.1800	107.8734	0.0
1.1712+05	4.1800	107.4471	0.0
1.3664+05	4.1800	107.0204	0.0
1.5616+05	4.1800	106.5933	0.0
1.7568+05	4.1800	106.1659	0.0
1.9519+05	4.1800	105.7382	0.0
2.1471+05	4.1800	105.3100	0.0
2.3423+05	4.1800	104.8816	0.0
2.5375+05	4.1800	104.4528	0.0
2.7327+05	4.1800	104.0237	0.0
2.9279+05	4.1800	103.5942	0.0
3.1231+05	4.1800	103.1643	0.0
3.3183+05	4.1800	102.7342	0.0
3.5135+05	4.1800	102.3036	0.0
3.7087+05	4.1800	101.8728	0.0
3.9039+05	4.1800	101.4416	0.0
4.0991+05	4.1800	101.0100	0.0

HEATX HOT-TQCUR 313E TQCURV INLET

PRESSURE PROFILE: CONSTANT2
PRESSURE DROP: 0.0 BAR
PROPERTY OPTION SET: IDEAL IDEAL LIQUID / IDEAL GAS

DUTY	PRES	TEMP	VFRAC
CAL/SEC	BAR	C	
0.0	9.6317	176.6667	0.0
1.9519+04	9.6317	175.5868	0.0
3.9039+04	9.6317	174.5035	0.0
5.8558+04	9.6317	173.4168	0.0
7.8078+04	9.6317	172.3267	0.0
9.7597+04	9.6317	171.2333	0.0
1.1712+05	9.6317	170.1364	0.0
1.3664+05	9.6317	169.0361	0.0
1.5616+05	9.6317	167.9324	0.0
1.7568+05	9.6317	166.8253	0.0
1.9519+05	9.6317	165.7148	0.0
2.1471+05	9.6317	164.6010	0.0
2.3423+05	9.6317	163.4837	0.0
2.5375+05	9.6317	162.3630	0.0
2.7327+05	9.6317	161.2389	0.0
2.9279+05	9.6317	160.1114	0.0
3.1231+05	9.6317	158.9805	0.0
3.3183+05	9.6317	157.8463	0.0
3.5135+05	9.6317	156.7086	0.0
3.7087+05	9.6317	155.5676	0.0
3.9039+05	9.6317	154.4231	0.0
4.0991+05	9.6317	153.2753	0.0

S1 S2 S3 S4

STREAM ID	S1	S2	S3	S4
FROM :	----	313E	----	313E
TO :	313E	----	313E	----
SUBSTREAM: MIXED				
PHASE:	LIQUID	LIQUID	LIQUID	LIQUID
COMPONENTS: KMOL/HR				
WATER	8286.5212	8286.5212	2775.4218	2775.4218
STEAM	0.0	0.0	0.0	0.0
TOTAL FLOW:				
KMOL/HR	8286.5212	8286.5212	2775.4218	2775.4218
KG/HR	1.4928+05	1.4928+05	5.0000+04	5.0000+04
L/MIN	2712.6143	2741.3096	1001.9567	969.6627
STATE VARIABLES:				
TEMP C	101.0100	110.0000	176.6667	153.2752
PRES BAR	4.1800	4.1800	9.6317	9.6317
VFRAC	0.0	0.0	0.0	0.0
LFRAC	1.0000	1.0000	1.0000	1.0000
SFRAC	0.0	0.0	0.0	0.0
ENTHALPY:				
CAL/MOL	-6.6852+04	-6.6674+04	-6.5236+04	-6.5768+04
CAL/GM	-3710.8386	-3700.9536	-3621.1387	-3650.6521
CAL/SEC	-1.5388+08	-1.5347+08	-5.0294+07	-5.0704+07
ENTROPY:				
CAL/MOL-K	-34.7952	-34.3352	-31.0322	-32.1768
CAL/GM-K	-1.9314	-1.9059	-1.7225	-1.7861
DENSITY:				
MOL/CC	5.0914-02	5.0381-02	4.6167-02	4.7704-02
GM/CC	0.9172	0.9076	0.8317	0.8594
AVG MW	18.0153	18.0153	18.0153	18.0153

Heat Exchanger Integration: Flowsheet

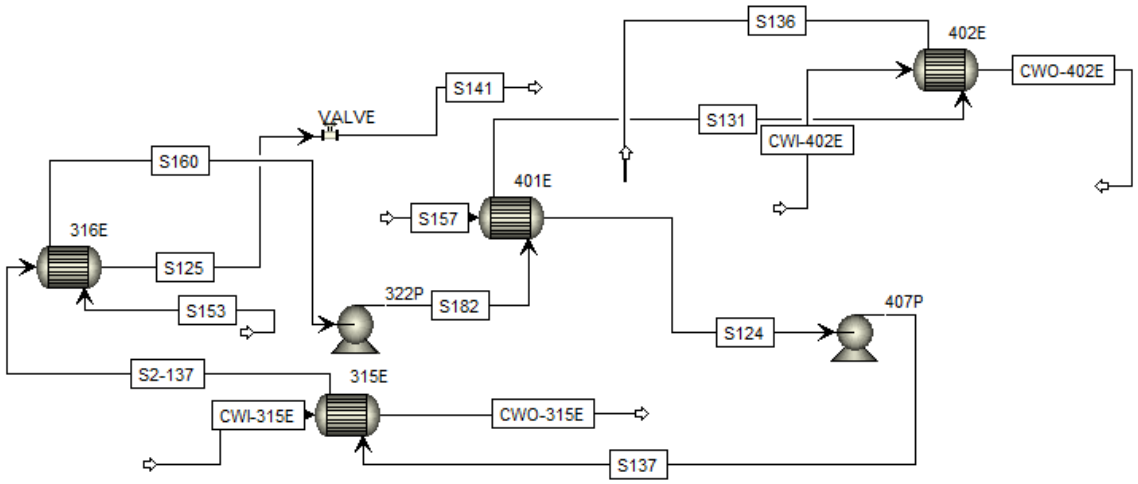

Figure B1. Flowsheet of heat exchanger integration from ASPEN.

Heat Exchanger Integration: Input Summary, Block Report and Stream Report

```
;
;Input Summary created by Aspen Plus Rel. 34.0 at 22:52:18 Sun Apr 10, 2016
;Directory \\base\root\homedir\SeniorDesign_316E_401E_402E_4-1  Filename
C:\Users\shaulson\AppData\Local\Temp\~ape4ff.txt
;


DYNAMICS
    DYNAMICS RESULTS=ON

IN-UNITS MET PRESSURE=bar TEMPERATURE=C DELTA-T=C PDROP=bar  &
        INVERSE-PRES='1/bar'

DEF-STREAMS CONVEN ALL

MODEL-OPTION

DATABANKS 'APV88 PURE32' / 'APV88 AQUEOUS' / 'APV88 SOLIDS' /  &
        'APV88 INORGANIC' / 'APEOSV88 AP-EOS' / NOASPENPCD

PROP-SOURCES 'APV88 PURE32' / 'APV88 AQUEOUS' / 'APV88 SOLIDS' &
         / 'APV88 INORGANIC' / 'APEOSV88 AP-EOS'

COMPONENTS
    WATER H2O /
    BUTANOL C4H10O-1 /
    ETHANOL C2H6O-2 /
    ACETONE C3H6O-1 /
    CO2 CO2 /
    H2 H2 /
    ACETI-01 C2H4O2-1 /
    N-BUT-01 C4H8O2-1

SOLVE
    RUN-MODE MODE=SIM
```

```
FLOWSHEET
    BLOCK 316E IN=S153 S2-137 OUT=S160 S125
    BLOCK 401E IN=S182 S157 OUT=S131 S124
    BLOCK 402E IN=S131 CWI-402E OUT=S136 CWO-402E
    BLOCK 322P IN=S160 OUT=S182
    BLOCK VALVE IN=S125 OUT=S141
    BLOCK 407P IN=S124 OUT=S137
    BLOCK 315E IN=S137 CWI-315E OUT=S2-137 CWO-315E

PROPERTIES NRTL

PROP-DATA NRTL-1
    IN-UNITS MET PRESSURE=bar TEMPERATURE=C DELTA-T=C PDROP=bar  &
        INVERSE-PRES='1/bar'
    PROP-LIST NRTL
    BPVAL WATER BUTANOL 13.11020000 -3338.953600 .3000000000  &
        0.0 0.0 0.0 19.17000000 117.6000000
    BPVAL BUTANOL WATER -2.040500000 763.8692000 .3000000000  &
        0.0 0.0 0.0 19.17000000 117.6000000
    BPVAL WATER ETHANOL 3.457800000 -586.0809000 .3000000000  &
        0.0 0.0 0.0 24.99000000 100.0000000
    BPVAL ETHANOL WATER -.8009000000 246.1800000 .3000000000  &
        0.0 0.0 0.0 24.99000000 100.0000000
    BPVAL BUTANOL ETHANOL 0.0 128.5015000 .3000000000 0.0 0.0  &
        0.0 70.00000000 110.9500000
    BPVAL ETHANOL BUTANOL 0.0 -85.21880000 .3000000000 0.0 0.0  &
        0.0 70.00000000 110.9500000
    BPVAL WATER ACETONE .0544000000 419.9716000 .3000000000 0.0  &
        0.0 0.0 20.00000000 95.10000000
    BPVAL ACETONE WATER 6.398100000 -1808.991000 .3000000000  &
        0.0 0.0 0.0 20.00000000 95.10000000
    BPVAL BUTANOL ACETONE 10.29790000 -3326.538100 .3000000000  &
        0.0 0.0 0.0 58.10000000 115.0000000
    BPVAL ACETONE BUTANOL -8.887500000 3077.281000 .3000000000  &
        0.0 0.0 0.0 58.10000000 115.0000000
    BPVAL ETHANOL ACETONE -1.078700000 479.0500000 .3000000000  &
        0.0 0.0 0.0 25.00000000 78.30000000
    BPVAL ACETONE ETHANOL -.3471000000 206.5973000 .3000000000  &
        0.0 0.0 0.0 25.00000000 78.30000000
    BPVAL WATER N-BUT-01 2.644200000 90.10910000 .3000000000  &
        0.0 0.0 0.0 51.40000000 163.9000000
    BPVAL N-BUT-01 WATER -2.119600000 735.8086000 .3000000000  &
        0.0 0.0 0.0 51.40000000 163.9000000
    BPVAL ACETI-01 N-BUT-01 3.296700000 0.0 .3000000000 0.0  &
        0.0 0.0 358.2000000 358.2000000
    BPVAL N-BUT-01 ACETI-01 -1.734300000 0.0 .3000000000 0.0  &
        0.0 0.0 358.2000000 358.2000000

STREAM CWI-315E
    SUBSTREAM MIXED TEMP=12.8 PRES=1.
    MASS-FLOW WATER 150000.

STREAM CWI-402E
    SUBSTREAM MIXED TEMP=25. PRES=1.
    MASS-FLOW WATER 125000.

STREAM S137
    SUBSTREAM MIXED TEMP=47.52 PRES=6.18
    MASS-FLOW WATER 121790. / BUTANOL 9039. / ETHANOL 152. /  &
        ACETONE 1604. / CO2 939. / H2 2. / ACETI-01 104. /  &
        N-BUT-01 253.

STREAM S153
    SUBSTREAM MIXED TEMP=97.8 PRES=2.
    MASS-FLOW WATER 149824.

STREAM S157
    SUBSTREAM MIXED TEMP=37. PRES=4.46
    MASS-FLOW WATER 121368. / BUTANOL 9039. / ETHANOL 152. /  &
        ACETONE 1604. / CO2 939. / H2 2. / ACETI-01 100. /  &
        N-BUT-01 252.
```

```
BLOCK 315E HEATX
    PARAM T-HOT=34.
    FEEDS HOT=S137 COLD=CWI-315E
    OUTLETS-HOT S2-137
    OUTLETS-COLD CWO-315E
    HOT-SIDE DPPARMOPT=NO
    COLD-SIDE DPPARMOPT=NO
    TQ-PARAM CURVE=YES

BLOCK 316E HEATX
    PARAM T-HOT=59.52
    FEEDS HOT=S153 COLD=S2-137
    OUTLETS-HOT S160
    OUTLETS-COLD S125
    HOT-SIDE DPPARMOPT=NO
    COLD-SIDE DPPARMOPT=NO
    TQ-PARAM CURVE=YES

BLOCK 401E HEATX
    PARAM T-HOT=45.4
    FEEDS HOT=S182 COLD=S157
    OUTLETS-HOT S131
    OUTLETS-COLD S124
    HOT-SIDE DPPARMOPT=NO
    COLD-SIDE DPPARMOPT=NO
    TQ-PARAM CURVE=YES

BLOCK 402E HEATX
    PARAM T-HOT=37.
    FEEDS HOT=S131 COLD=CWI-402E
    OUTLETS-HOT S136
    OUTLETS-COLD CWO-402E
    HOT-SIDE DPPARMOPT=NO
    COLD-SIDE DPPARMOPT=NO
    TQ-PARAM CURVE=YES

BLOCK 322P PUMP
    PARAM PRES=3.91

BLOCK 407P PUMP
    PARAM PRES=6.18

BLOCK VALVE VALVE
    PARAM P-OUT=1.

EO-CONV-OPTI

STREAM-REPOR MOLEFLOW
;
;
;
;
;


BLOCK:  315E     MODEL: HEATX
 ------------------------------
   HOT SIDE:
   ---------
   INLET STREAM:             S137
   OUTLET STREAM:            S2-137
   PROPERTY OPTION SET:   NRTL      RENON (NRTL) / IDEAL GAS
   COLD SIDE:
   ----------
   INLET STREAM:             CWI-315E
   OUTLET STREAM:            CWO-315E
   PROPERTY OPTION SET:   NRTL      RENON (NRTL) / IDEAL GAS

                       ***  MASS AND ENERGY BALANCE  ***
                                    IN               OUT        RELATIVE DIFF.
    TOTAL BALANCE
```

```
    MOLE(KMOL/HR )            15242.9          15242.9          0.00000
    MASS(KG/HR   )            283456.          283456.          0.00000
    ENTHALPY(CAL/SEC )      -0.289155E+09    -0.289155E+09    -0.206134E-15

                  ***  CO2 EQUIVALENT SUMMARY ***
 FEED STREAMS CO2E             939.000      KG/HR
 PRODUCT STREAMS CO2E          939.000      KG/HR
 NET STREAMS CO2E PRODUCTION   0.00000      KG/HR
 UTILITIES CO2E PRODUCTION     0.00000      KG/HR
 TOTAL CO2E PRODUCTION         0.00000      KG/HR

                      ***  INPUT DATA  ***

FLASH SPECS FOR HOT SIDE:
TWO    PHASE      FLASH
MAXIMUM NO. ITERATIONS                                  30
CONVERGENCE TOLERANCE                                    0.000100000

FLASH SPECS FOR COLD SIDE:
TWO    PHASE      FLASH
MAXIMUM NO. ITERATIONS                                  30
CONVERGENCE TOLERANCE                                    0.000100000

FLOW DIRECTION AND SPECIFICATION:
  COUNTERCURRENT   HEAT EXCHANGER
  SPECIFIED HOT OUTLET TEMP
  SPECIFIED VALUE               C                       34.0000
  LMTD CORRECTION FACTOR                                   1.00000

PRESSURE SPECIFICATION:
  HOT  SIDE PRESSURE DROP       BAR                        0.0000
  COLD SIDE PRESSURE DROP       BAR                        0.0000

HEAT TRANSFER COEFFICIENT SPECIFICATION:
  HOT LIQUID    COLD LIQUID     CAL/SEC-SQCM-K             0.0203
  HOT 2-PHASE   COLD LIQUID     CAL/SEC-SQCM-K             0.0203
  HOT VAPOR     COLD LIQUID     CAL/SEC-SQCM-K             0.0203
  HOT LIQUID    COLD 2-PHASE    CAL/SEC-SQCM-K             0.0203
  HOT 2-PHASE   COLD 2-PHASE    CAL/SEC-SQCM-K             0.0203
  HOT VAPOR     COLD 2-PHASE    CAL/SEC-SQCM-K             0.0203
  HOT LIQUID    COLD VAPOR      CAL/SEC-SQCM-K             0.0203
  HOT 2-PHASE   COLD VAPOR      CAL/SEC-SQCM-K             0.0203
  HOT VAPOR     COLD VAPOR      CAL/SEC-SQCM-K             0.0203

                      ***  OVERALL RESULTS  ***

STREAMS:
                ---------------------------------------
                |                                     |
S137      ----->|                HOT                  |-----> S2-137
T=  5.3286D+01  |                                     |       T=  3.4000D+01
P=  6.1800D+00  |                                     |       P=  6.1800D+00
V=  0.0000D+00  |                                     |       V=  0.0000D+00
                |                                     |
CWO-315E  <-----|                COLD                 |<----- CWI-315E
T=  3.0152D+01  |                                     |       T=  1.2800D+01
P=  1.0000D+00  |                                     |       P=  1.0000D+00
V=  0.0000D+00  |                                     |       V=  0.0000D+00
                ---------------------------------------

DUTY AND AREA:
  CALCULATED HEAT DUTY          CAL/SEC            709357.1125
  CALCULATED (REQUIRED) AREA    SQM                   157.7222
  ACTUAL EXCHANGER AREA         SQM                   157.7222
  PER CENT OVER-DESIGN                                  0.0000

HEAT TRANSFER COEFFICIENT:
  AVERAGE COEFFICIENT (DIRTY)   CAL/SEC-SQCM-K            0.0203
  UA (DIRTY)                    CAL/SEC-K            32020.6044

LOG-MEAN TEMPERATURE DIFFERENCE:
  LMTD CORRECTION FACTOR                                1.0000
```

```
    LMTD (CORRECTED)              C                          22.1531
    NUMBER OF SHELLS IN SERIES                                1

  PRESSURE DROP:
    HOTSIDE, TOTAL                BAR                         0.0000
    COLDSIDE, TOTAL               BAR                         0.0000

                        ***  ZONE RESULTS  ***

  TEMPERATURE LEAVING EACH ZONE:

                                   HOT
          ------------------------------------------------------------
          |                                                          |
HOT IN    |                            LIQ                           | HOT OUT
------>   |                                                          |------>
  53.3    |                                                          |   34.0
          |                                                          |
COLDOUT   |                            LIQ                           | COLDIN
<------   |                                                          |<------
  30.2    |                                                          |   12.8
          |                                                          |
          ------------------------------------------------------------
                                   COLD

  ZONE HEAT TRANSFER AND AREA:

  ZONE       HEAT DUTY       AREA        LMTD       AVERAGE U        UA
             CAL/SEC         SQM          C         CAL/SEC-SQCM-K   CAL/SEC-K
    1     709357.112       157.7222      22.1531      0.0203       32020.6044

HEATX COLD-TQCU 315E     TQCURV INLET
-------------------------------------
  PRESSURE PROFILE:      CONSTANT2
  PRESSURE DROP:         0.0          BAR
  PROPERTY OPTION SET:   NRTL      RENON (NRTL) / IDEAL GAS

-----------------------------------------------------
!  DUTY      !  PRES      !  TEMP      !  VFRAC     !
!            !            !            !            !
!            !            !            !            !
!            !            !            !            !
!  CAL/SEC   !  BAR       !  C         !            !
!            !            !            !            !
!============!============!============!============!
!     0.0    !     1.0000 !    30.1518 !     0.0    !
!  3.3779+04 !     1.0000 !    29.3314 !     0.0    !
!  6.7558+04 !     1.0000 !    28.5104 !     0.0    !
!  1.0134+05 !     1.0000 !    27.6888 !     0.0    !
!  1.3512+05 !     1.0000 !    26.8666 !     0.0    !
!------------+------------+------------+------------!
!  1.6889+05 !     1.0000 !    26.0437 !     0.0    !
!  2.0267+05 !     1.0000 !    25.2203 !     0.0    !
!  2.3645+05 !     1.0000 !    24.3962 !     0.0    !
!  2.7023+05 !     1.0000 !    23.5716 !     0.0    !
!  3.0401+05 !     1.0000 !    22.7464 !     0.0    !
!------------+------------+------------+------------!
!  3.3779+05 !     1.0000 !    21.9206 !     0.0    !
!  3.7157+05 !     1.0000 !    21.0942 !     0.0    !
!  4.0535+05 !     1.0000 !    20.2672 !     0.0    !
!  4.3913+05 !     1.0000 !    19.4397 !     0.0    !
!  4.7290+05 !     1.0000 !    18.6116 !     0.0    !
!------------+------------+------------+------------!
!  5.0668+05 !     1.0000 !    17.7830 !     0.0    !
!  5.4046+05 !     1.0000 !    16.9539 !     0.0    !
!  5.7424+05 !     1.0000 !    16.1241 !     0.0    !
!  6.0802+05 !     1.0000 !    15.2939 !     0.0    !
!  6.4180+05 !     1.0000 !    14.4631 !     0.0    !
!------------+------------+------------+------------!
!  6.7558+05 !     1.0000 !    13.6318 !     0.0    !
!  7.0936+05 !     1.0000 !    12.8000 !     0.0    !
-----------------------------------------------------
```

```
HEATX HOT-TQCUR 315E     TQCURV INLET
------------------------------------
  PRESSURE PROFILE:      CONSTANT2
  PRESSURE DROP:         0.0          BAR
  PROPERTY OPTION SET:   NRTL      RENON (NRTL) / IDEAL GAS

-----------------------------------------------------
!  DUTY      !  PRES      !  TEMP      !  VFRAC     !
!            !            !            !            !
!            !            !            !            !
!            !            !            !            !
!  CAL/SEC   !  BAR       !  C         !            !
!            !            !            !            !
!============!============!============!============!
!     0.0    !     6.1800 !    53.2862 !     0.0    !
!  3.3779+04 !     6.1800 !    52.3777 !     0.0    !
!  6.7558+04 !     6.1800 !    51.4681 !     0.0    !
!  1.0134+05 !     6.1800 !    50.5575 !     0.0    !
!  1.3512+05 !     6.1800 !    49.6458 !     0.0    !
!------------+------------+------------+------------!
!  1.6889+05 !     6.1800 !    48.7332 !     0.0    !
!  2.0267+05 !     6.1800 !    47.8196 !     0.0    !
!  2.3645+05 !     6.1800 !    46.9049 !     0.0    !
!  2.7023+05 !     6.1800 !    45.9893 !     0.0    !
!  3.0401+05 !     6.1800 !    45.0727 !     0.0    !
!------------+------------+------------+------------!
!  3.3779+05 !     6.1800 !    44.1551 !     0.0    !
!  3.7157+05 !     6.1800 !    43.2365 !     0.0    !
!  4.0535+05 !     6.1800 !    42.3170 !     0.0    !
!  4.3913+05 !     6.1800 !    41.3966 !     0.0    !
!  4.7290+05 !     6.1800 !    40.4752 !     0.0    !
!------------+------------+------------+------------!
!  5.0668+05 !     6.1800 !    39.5529 !     0.0    !
!  5.4046+05 !     6.1800 !    38.6296 !     0.0    !
!  5.7424+05 !     6.1800 !    37.7055 !     0.0    !
!  6.0802+05 !     6.1800 !    36.7805 !     0.0    !
!  6.4180+05 !     6.1800 !    35.8545 !     0.0    !
!------------+------------+------------+------------!
!  6.7558+05 !     6.1800 !    34.9277 !     0.0    !
!  7.0936+05 !     6.1800 !    34.0000 !     0.0    !
-----------------------------------------------------

BLOCK:  316E     MODEL: HEATX
-----------------------------
  HOT SIDE:
  ---------
  INLET STREAM:             S153
  OUTLET STREAM:            S160
  PROPERTY OPTION SET:   NRTL      RENON (NRTL) / IDEAL GAS
  COLD SIDE:
  ----------
  INLET STREAM:             S2-137
  OUTLET STREAM:            S125
  PROPERTY OPTION SET:   NRTL      RENON (NRTL) / IDEAL GAS

                     ***  MASS AND ENERGY BALANCE  ***
                                  IN              OUT        RELATIVE DIFF.
   TOTAL BALANCE
      MOLE(KMOL/HR )            15233.2         15233.2         0.00000
      MASS(KG/HR   )            283280.         283280.         0.00000
      ENTHALPY(CAL/SEC )     -0.286069E+09   -0.286069E+09    0.208358E-15

                     ***  CO2 EQUIVALENT SUMMARY ***
   FEED STREAMS CO2E             939.000      KG/HR
   PRODUCT STREAMS CO2E          939.000      KG/HR
   NET STREAMS CO2E PRODUCTION   0.00000      KG/HR
   UTILITIES CO2E PRODUCTION     0.00000      KG/HR
   TOTAL CO2E PRODUCTION         0.00000      KG/HR

                         ***  INPUT DATA  ***
```

```
FLASH SPECS FOR HOT SIDE:
TWO    PHASE      FLASH
MAXIMUM NO. ITERATIONS                                    30
CONVERGENCE TOLERANCE                                      0.000100000

FLASH SPECS FOR COLD SIDE:
TWO    PHASE      FLASH
MAXIMUM NO. ITERATIONS                                    30
CONVERGENCE TOLERANCE                                      0.000100000

FLOW DIRECTION AND SPECIFICATION:
  COUNTERCURRENT   HEAT EXCHANGER
  SPECIFIED HOT OUTLET TEMP
  SPECIFIED VALUE                C                        59.5200
  LMTD CORRECTION FACTOR                                    1.00000

PRESSURE SPECIFICATION:
  HOT  SIDE PRESSURE DROP        BAR                        0.0000
  COLD SIDE PRESSURE DROP        BAR                        0.0000

HEAT TRANSFER COEFFICIENT SPECIFICATION:
  HOT LIQUID    COLD LIQUID      CAL/SEC-SQCM-K             0.0203
  HOT 2-PHASE   COLD LIQUID      CAL/SEC-SQCM-K             0.0203
  HOT VAPOR     COLD LIQUID      CAL/SEC-SQCM-K             0.0203
  HOT LIQUID    COLD 2-PHASE     CAL/SEC-SQCM-K             0.0203
  HOT 2-PHASE   COLD 2-PHASE     CAL/SEC-SQCM-K             0.0203
  HOT VAPOR     COLD 2-PHASE     CAL/SEC-SQCM-K             0.0203
  HOT LIQUID    COLD VAPOR       CAL/SEC-SQCM-K             0.0203
  HOT 2-PHASE   COLD VAPOR       CAL/SEC-SQCM-K             0.0203
  HOT VAPOR     COLD VAPOR       CAL/SEC-SQCM-K             0.0203

                    ***  OVERALL RESULTS  ***

STREAMS:
                 ---------------------------------------
                 |                                     |
S153      ----->|                HOT                  |-----> S160
T=  9.7800D+01   |                                     |       T=  5.9520D+01
P=  2.0000D+00   |                                     |       P=  2.0000D+00
V=  0.0000D+00   |                                     |       V=  0.0000D+00
                 |                                     |
S125      <-----|                COLD                 |<----- S2-137
T=  7.8771D+01   |                                     |       T=  3.4000D+01
P=  6.1800D+00   |                                     |       P=  6.1800D+00
V=  0.0000D+00   |                                     |       V=  0.0000D+00
                 ---------------------------------------

DUTY AND AREA:
  CALCULATED HEAT DUTY           CAL/SEC            1674195.0427
  CALCULATED (REQUIRED) AREA     SQM                    372.8740
  ACTUAL EXCHANGER AREA          SQM                    372.8740
  PER CENT OVER-DESIGN                                    0.0000

HEAT TRANSFER COEFFICIENT:
  AVERAGE COEFFICIENT (DIRTY)    CAL/SEC-SQCM-K             0.0203
  UA (DIRTY)                     CAL/SEC-K              75700.5059

LOG-MEAN TEMPERATURE DIFFERENCE:
  LMTD CORRECTION FACTOR                                  1.0000
  LMTD (CORRECTED)               C                       22.1160
  NUMBER OF SHELLS IN SERIES                               1

PRESSURE DROP:
  HOTSIDE, TOTAL                 BAR                        0.0000
  COLDSIDE, TOTAL                BAR                        0.0000

                    ***  ZONE RESULTS  ***

TEMPERATURE LEAVING EACH ZONE:

                                HOT
     ------------------------------------------------------------
```

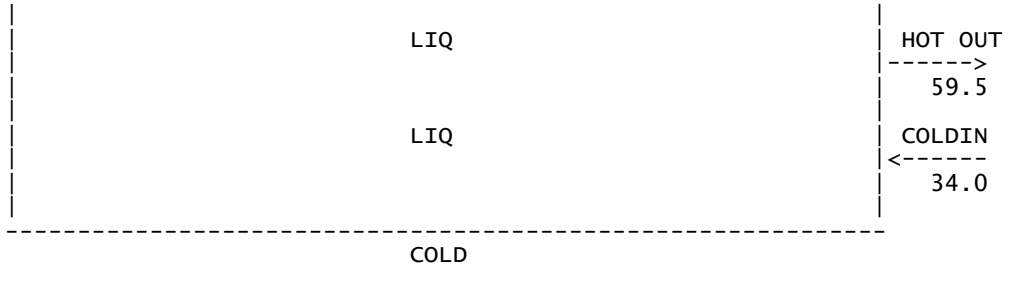

ZONE HEAT TRANSFER AND AREA:

ZONE	HEAT DUTY CAL/SEC	AREA SQM	LMTD C	AVERAGE U CAL/SEC-SQCM-K	UA CAL/SEC-K
1	1674195.043	372.8740	22.1160	0.0203	75700.5059

HEATX COLD-TQCU 316E TQCURV INLET

PRESSURE PROFILE: CONSTANT2
PRESSURE DROP: 0.0 BAR
PROPERTY OPTION SET: NRTL RENON (NRTL) / IDEAL GAS

DUTY CAL/SEC	PRES BAR	TEMP C	VFRAC
0.0	6.1800	78.7708	0.0
7.9724+04	6.1800	76.7009	0.0
1.5945+05	6.1800	74.6243	0.0
2.3917+05	6.1800	72.5411	0.0
3.1889+05	6.1800	70.4513	0.0
3.9862+05	6.1800	68.3550	0.0
4.7834+05	6.1800	66.2523	0.0
5.5807+05	6.1800	64.1432	0.0
6.3779+05	6.1800	62.0278	0.0
7.1751+05	6.1800	59.9063	0.0
7.9724+05	6.1800	57.7786	0.0
8.7696+05	6.1800	55.6450	0.0
9.5668+05	6.1800	53.5054	0.0
1.0364+06	6.1800	51.3600	0.0
1.1161+06	6.1800	49.2089	0.0
1.1959+06	6.1800	47.0522	0.0
1.2756+06	6.1800	44.8899	0.0
1.3553+06	6.1800	42.7223	0.0
1.4350+06	6.1800	40.5494	0.0
1.5147+06	6.1800	38.3713	0.0
1.5945+06	6.1800	36.1881	0.0
1.6742+06	6.1800	34.0000	0.0

HEATX HOT-TQCUR 316E TQCURV INLET

PRESSURE PROFILE: CONSTANT2
PRESSURE DROP: 0.0 BAR
PROPERTY OPTION SET: NRTL RENON (NRTL) / IDEAL GAS

DUTY CAL/SEC	PRES BAR	TEMP C	VFRAC

0.0	2.0000	97.8000	0.0
7.9724+04	2.0000	96.0300	0.0
1.5945+05	2.0000	94.2544	0.0
2.3917+05	2.0000	92.4734	0.0
3.1889+05	2.0000	90.6868	0.0
3.9862+05	2.0000	88.8948	0.0
4.7834+05	2.0000	87.0974	0.0
5.5807+05	2.0000	85.2946	0.0
6.3779+05	2.0000	83.4865	0.0
7.1751+05	2.0000	81.6732	0.0
7.9724+05	2.0000	79.8546	0.0
8.7696+05	2.0000	78.0309	0.0
9.5668+05	2.0000	76.2020	0.0
1.0364+06	2.0000	74.3680	0.0
1.1161+06	2.0000	72.5291	0.0
1.1959+06	2.0000	70.6851	0.0
1.2756+06	2.0000	68.8362	0.0
1.3553+06	2.0000	66.9825	0.0
1.4350+06	2.0000	65.1240	0.0
1.5147+06	2.0000	63.2606	0.0
1.5945+06	2.0000	61.3926	0.0
1.6742+06	2.0000	59.5200	0.0

BLOCK: 322P MODEL: PUMP

INLET STREAM: S160
OUTLET STREAM: S182
PROPERTY OPTION SET: NRTL RENON (NRTL) / IDEAL GAS

*** MASS AND ENERGY BALANCE ***

	IN	OUT	RELATIVE DIFF.
TOTAL BALANCE			
MOLE(KMOL/HR)	8316.50	8316.50	0.00000
MASS(KG/HR)	149824.	149824.	0.00000
ENTHALPY(CAL/SEC)	-0.156256E+09	-0.156254E+09	-0.170827E-04

*** CO2 EQUIVALENT SUMMARY ***

FEED STREAMS CO2E	0.00000	KG/HR
PRODUCT STREAMS CO2E	0.00000	KG/HR
NET STREAMS CO2E PRODUCTION	0.00000	KG/HR
UTILITIES CO2E PRODUCTION	0.00000	KG/HR
TOTAL CO2E PRODUCTION	0.00000	KG/HR

*** INPUT DATA ***

OUTLET PRESSURE BAR	3.91000
DRIVER EFFICIENCY	1.00000

FLASH SPECIFICATIONS:
LIQUID PHASE CALCULATION
NO FLASH PERFORMED

MAXIMUM NUMBER OF ITERATIONS	30
TOLERANCE	0.000100000

*** RESULTS ***

VOLUMETRIC FLOW RATE L/MIN	2,601.10
PRESSURE CHANGE BAR	1.91000
NPSH AVAILABLE M-KGF/KG	19.1725
FLUID POWER KW	8.28017
BRAKE POWER KW	11.1757
ELECTRICITY KW	11.1757
PUMP EFFICIENCY USED	0.74091
NET WORK REQUIRED KW	11.1757
HEAD DEVELOPED M-KGF/KG	20.2880

BLOCK: 401E MODEL: HEATX

```
------------------------------
  HOT SIDE:
  ---------
  INLET STREAM:             S182
  OUTLET STREAM:            S131
  PROPERTY OPTION SET:   NRTL      RENON (NRTL) / IDEAL GAS
  COLD SIDE:
  ----------
  INLET STREAM:             S157
  OUTLET STREAM:            S124
  PROPERTY OPTION SET:   NRTL      RENON (NRTL) / IDEAL GAS

                     ***  MASS AND ENERGY BALANCE  ***
                                  IN              OUT        RELATIVE DIFF.
   TOTAL BALANCE
      MOLE(KMOL/HR )           15233.2         15233.2         0.00000
      MASS(KG/HR   )           283280.         283280.         0.00000
      ENTHALPY(CAL/SEC )    -0.287631E+09   -0.287631E+09    0.414452E-15

                     ***  CO2 EQUIVALENT SUMMARY ***
   FEED STREAMS CO2E            939.000      KG/HR
   PRODUCT STREAMS CO2E         939.000      KG/HR
   NET STREAMS CO2E PRODUCTION  0.00000      KG/HR
   UTILITIES CO2E PRODUCTION    0.00000      KG/HR
   TOTAL CO2E PRODUCTION        0.00000      KG/HR

                          ***  INPUT DATA  ***

  FLASH SPECS FOR HOT SIDE:
  TWO    PHASE      FLASH
  MAXIMUM NO. ITERATIONS                                  30
  CONVERGENCE TOLERANCE                                    0.000100000

  FLASH SPECS FOR COLD SIDE:
  TWO    PHASE      FLASH
  MAXIMUM NO. ITERATIONS                                  30
  CONVERGENCE TOLERANCE                                    0.000100000

  FLOW DIRECTION AND SPECIFICATION:
    COUNTERCURRENT   HEAT EXCHANGER
    SPECIFIED HOT OUTLET TEMP
    SPECIFIED VALUE                C                      45.4000
    LMTD CORRECTION FACTOR                                  1.00000

  PRESSURE SPECIFICATION:
    HOT  SIDE PRESSURE DROP        BAR                      0.0000
    COLD SIDE PRESSURE DROP        BAR                      0.0000

  HEAT TRANSFER COEFFICIENT SPECIFICATION:
    HOT LIQUID    COLD LIQUID      CAL/SEC-SQCM-K           0.0203
    HOT 2-PHASE   COLD LIQUID      CAL/SEC-SQCM-K           0.0203
    HOT VAPOR     COLD LIQUID      CAL/SEC-SQCM-K           0.0203
    HOT LIQUID    COLD 2-PHASE     CAL/SEC-SQCM-K           0.0203
    HOT 2-PHASE   COLD 2-PHASE     CAL/SEC-SQCM-K           0.0203
    HOT VAPOR     COLD 2-PHASE     CAL/SEC-SQCM-K           0.0203
    HOT LIQUID    COLD VAPOR       CAL/SEC-SQCM-K           0.0203
    HOT 2-PHASE   COLD VAPOR       CAL/SEC-SQCM-K           0.0203
    HOT VAPOR     COLD VAPOR       CAL/SEC-SQCM-K           0.0203

                          ***  OVERALL RESULTS  ***

  STREAMS:
                  ---------------------------------------
                  |                                     |
  S182      ----->|                HOT                  |-----> S131
  T=  5.9583D+01  |                                     |       T=  4.5400D+01
  P=  3.9100D+00  |                                     |       P=  3.9100D+00
  V=  0.0000D+00  |                                     |       V=  0.0000D+00
                  |                                     |
  S124      <-----|                COLD                 |<----- S157
  T=  5.3227D+01  |                                     |       T=  3.7000D+01
  P=  4.4600D+00  |                                     |       P=  4.4600D+00
```

```
  V=  0.0000D+00  |                                    |       V=  0.0000D+00
                  -------------------------------------

  DUTY AND AREA:
    CALCULATED HEAT DUTY           CAL/SEC             597815.9647
    CALCULATED (REQUIRED) AREA     SQM                    401.7083
    ACTUAL EXCHANGER AREA          SQM                    401.7083
    PER CENT OVER-DESIGN                                    0.0000

  HEAT TRANSFER COEFFICIENT:
    AVERAGE COEFFICIENT (DIRTY)    CAL/SEC-SQCM-K           0.0203
    UA (DIRTY)                     CAL/SEC-K            81554.4151

  LOG-MEAN TEMPERATURE DIFFERENCE:
    LMTD CORRECTION FACTOR                                  1.0000
    LMTD (CORRECTED)               C                        7.3303
    NUMBER OF SHELLS IN SERIES                               1

  PRESSURE DROP:
    HOTSIDE, TOTAL                 BAR                      0.0000
    COLDSIDE, TOTAL                BAR                      0.0000

                       ***  ZONE RESULTS  ***

  TEMPERATURE LEAVING EACH ZONE:

                                   HOT
         ------------------------------------------------------------
         |                                                          |
HOT IN   |                          LIQ                             | HOT OUT
------>  |                                                          |------>
  59.6   |                                                          |   45.4
         |                                                          |
COLDOUT  |                          LIQ                             | COLDIN
<------  |                                                          |<------
  53.2   |                                                          |   37.0
         |                                                          |
         ------------------------------------------------------------
                                   COLD

  ZONE HEAT TRANSFER AND AREA:

  ZONE       HEAT DUTY       AREA       LMTD       AVERAGE U       UA
             CAL/SEC         SQM         C         CAL/SEC-SQCM-K  CAL/SEC-K
    1     597815.965       401.7083      7.3303     0.0203       81554.4151

HEATX COLD-TQCU 401E     TQCURV INLET
-------------------------------------
  PRESSURE PROFILE:      CONSTANT2
  PRESSURE DROP:         0.0         BAR
  PROPERTY OPTION SET:   NRTL      RENON (NRTL) / IDEAL GAS

-----------------------------------------------------
!  DUTY      !  PRES      !  TEMP      !  VFRAC     !
!            !            !            !            !
!            !            !            !            !
!            !            !            !            !
!  CAL/SEC   !  BAR       !  C         !            !
!            !            !            !            !
!============!============!============!============!
!     0.0    !     4.4600 !    53.2273 !     0.0    !
!  2.8467+04 !     4.4600 !    52.4617 !     0.0    !
!  5.6935+04 !     4.4600 !    51.6953 !     0.0    !
!  8.5402+04 !     4.4600 !    50.9281 !     0.0    !
!  1.1387+05 !     4.4600 !    50.1602 !     0.0    !
!------------+------------+------------+------------!
!  1.4234+05 !     4.4600 !    49.3917 !     0.0    !
!  1.7080+05 !     4.4600 !    48.6223 !     0.0    !
!  1.9927+05 !     4.4600 !    47.8523 !     0.0    !
!  2.2774+05 !     4.4600 !    47.0816 !     0.0    !
!  2.5621+05 !     4.4600 !    46.3102 !     0.0    !
!------------+------------+------------+------------!
```

```
!  2.8467+05 !     4.4600 !    45.5380 !     0.0    !
!  3.1314+05 !     4.4600 !    44.7652 !     0.0    !
!  3.4161+05 !     4.4600 !    43.9917 !     0.0    !
!  3.7008+05 !     4.4600 !    43.2175 !     0.0    !
!  3.9854+05 !     4.4600 !    42.4426 !     0.0    !
!------------+------------+------------+------------!
!  4.2701+05 !     4.4600 !    41.6671 !     0.0    !
!  4.5548+05 !     4.4600 !    40.8909 !     0.0    !
!  4.8395+05 !     4.4600 !    40.1140 !     0.0    !
!  5.1241+05 !     4.4600 !    39.3365 !     0.0    !
!  5.4088+05 !     4.4600 !    38.5583 !     0.0    !
!------------+------------+------------+------------!
!  5.6935+05 !     4.4600 !    37.7795 !     0.0    !
!  5.9782+05 !     4.4600 !    37.0000 !     0.0    !
-------------------------------------------------------

HEATX HOT-TQCUR 401E     TQCURV INLET
-------------------------------------
  PRESSURE PROFILE:      CONSTANT2
  PRESSURE DROP:         0.0          BAR
  PROPERTY OPTION SET:   NRTL      RENON (NRTL) / IDEAL GAS

-------------------------------------------------------
!  DUTY      !  PRES      !  TEMP      !  VFRAC     !
!            !            !            !            !
!            !            !            !            !
!            !            !            !            !
!  CAL/SEC   !  BAR       !  C         !            !
!            !            !            !            !
!============!============!============!============!
!     0.0    !     3.9100 !    59.5828 !     0.0    !
!  2.8467+04 !     3.9100 !    58.9130 !     0.0    !
!  5.6935+04 !     3.9100 !    58.2427 !     0.0    !
!  8.5402+04 !     3.9100 !    57.5718 !     0.0    !
!  1.1387+05 !     3.9100 !    56.9004 !     0.0    !
!------------+------------+------------+------------!
!  1.4234+05 !     3.9100 !    56.2283 !     0.0    !
!  1.7080+05 !     3.9100 !    55.5557 !     0.0    !
!  1.9927+05 !     3.9100 !    54.8825 !     0.0    !
!  2.2774+05 !     3.9100 !    54.2088 !     0.0    !
!  2.5621+05 !     3.9100 !    53.5345 !     0.0    !
!------------+------------+------------+------------!
!  2.8467+05 !     3.9100 !    52.8596 !     0.0    !
!  3.1314+05 !     3.9100 !    52.1842 !     0.0    !
!  3.4161+05 !     3.9100 !    51.5082 !     0.0    !
!  3.7008+05 !     3.9100 !    50.8317 !     0.0    !
!  3.9854+05 !     3.9100 !    50.1546 !     0.0    !
!------------+------------+------------+------------!
!  4.2701+05 !     3.9100 !    49.4770 !     0.0    !
!  4.5548+05 !     3.9100 !    48.7988 !     0.0    !
!  4.8395+05 !     3.9100 !    48.1201 !     0.0    !
!  5.1241+05 !     3.9100 !    47.4409 !     0.0    !
!  5.4088+05 !     3.9100 !    46.7611 !     0.0    !
!------------+------------+------------+------------!
!  5.6935+05 !     3.9100 !    46.0808 !     0.0    !
!  5.9782+05 !     3.9100 !    45.4000 !     0.0    !
-------------------------------------------------------

BLOCK:  402E     MODEL: HEATX
------------------------------
  HOT SIDE:
  ---------
  INLET STREAM:             S131
  OUTLET STREAM:            S136
  PROPERTY OPTION SET:   NRTL      RENON (NRTL) / IDEAL GAS
  COLD SIDE:
  ----------
  INLET STREAM:             CWI-402E
  OUTLET STREAM:            CWO-402E
  PROPERTY OPTION SET:   NRTL      RENON (NRTL) / IDEAL GAS

                    ***  MASS AND ENERGY BALANCE  ***
```

```
                                IN              OUT        RELATIVE DIFF.
 TOTAL BALANCE
    MOLE(KMOL/HR )            15255.1         15255.1         0.00000
    MASS(KG/HR   )            274824.         274824.         0.00000
    ENTHALPY(CAL/SEC )      -0.288418E+09   -0.288418E+09     0.00000

                    ***  CO2 EQUIVALENT SUMMARY ***
 FEED STREAMS CO2E             0.00000      KG/HR
 PRODUCT STREAMS CO2E          0.00000      KG/HR
 NET STREAMS CO2E PRODUCTION   0.00000      KG/HR
 UTILITIES CO2E PRODUCTION     0.00000      KG/HR
 TOTAL CO2E PRODUCTION         0.00000      KG/HR

                       ***  INPUT DATA  ***

FLASH SPECS FOR HOT SIDE:
TWO    PHASE      FLASH
MAXIMUM NO. ITERATIONS                                    30
CONVERGENCE TOLERANCE                                      0.000100000

FLASH SPECS FOR COLD SIDE:
TWO    PHASE      FLASH
MAXIMUM NO. ITERATIONS                                    30
CONVERGENCE TOLERANCE                                      0.000100000

FLOW DIRECTION AND SPECIFICATION:
  COUNTERCURRENT   HEAT EXCHANGER
  SPECIFIED HOT OUTLET TEMP
  SPECIFIED VALUE               C                         37.0000
  LMTD CORRECTION FACTOR                                     1.00000

PRESSURE SPECIFICATION:
  HOT  SIDE PRESSURE DROP       BAR                        0.0000
  COLD SIDE PRESSURE DROP       BAR                        0.0000

HEAT TRANSFER COEFFICIENT SPECIFICATION:
  HOT LIQUID    COLD LIQUID     CAL/SEC-SQCM-K             0.0203
  HOT 2-PHASE   COLD LIQUID     CAL/SEC-SQCM-K             0.0203
  HOT VAPOR     COLD LIQUID     CAL/SEC-SQCM-K             0.0203
  HOT LIQUID    COLD 2-PHASE    CAL/SEC-SQCM-K             0.0203
  HOT 2-PHASE   COLD 2-PHASE    CAL/SEC-SQCM-K             0.0203
  HOT VAPOR     COLD 2-PHASE    CAL/SEC-SQCM-K             0.0203
  HOT LIQUID    COLD VAPOR      CAL/SEC-SQCM-K             0.0203
  HOT 2-PHASE   COLD VAPOR      CAL/SEC-SQCM-K             0.0203
  HOT VAPOR     COLD VAPOR      CAL/SEC-SQCM-K             0.0203

                       ***  OVERALL RESULTS  ***

STREAMS:
                ---------------------------------------
                |                                     |
S131      ----->|                HOT                  |-----> S136
T=  4.5400D+01  |                                     |       T=  3.7000D+01
P=  3.9100D+00  |                                     |       P=  3.9100D+00
V=  0.0000D+00  |                                     |       V=  0.0000D+00
                |                                     |
CWO-402E  <-----|                COLD                 |<----- CWI-402E
T=  3.5181D+01  |                                     |       T=  2.5000D+01
P=  1.0000D+00  |                                     |       P=  1.0000D+00
V=  0.0000D+00  |                                     |       V=  0.0000D+00
                ---------------------------------------

DUTY AND AREA:
  CALCULATED HEAT DUTY          CAL/SEC             349489.8599
  CALCULATED (REQUIRED) AREA    SQM                    155.2900
  ACTUAL EXCHANGER AREA         SQM                    155.2900
  PER CENT OVER-DESIGN                                   0.0000

HEAT TRANSFER COEFFICIENT:
  AVERAGE COEFFICIENT (DIRTY)   CAL/SEC-SQCM-K             0.0203
  UA (DIRTY)                    CAL/SEC-K              31526.8208
```

```
  LOG-MEAN TEMPERATURE DIFFERENCE:
    LMTD CORRECTION FACTOR                                  1.0000
    LMTD (CORRECTED)              C                        11.0855
    NUMBER OF SHELLS IN SERIES                              1

  PRESSURE DROP:
    HOTSIDE, TOTAL                BAR                       0.0000
    COLDSIDE, TOTAL               BAR                       0.0000

                         ***  ZONE RESULTS  ***

  TEMPERATURE LEAVING EACH ZONE:

                                   HOT
          ------------------------------------------------------------
          |                                                          |
          |                                                          |
HOT IN    |                            LIQ                           | HOT OUT
------>   |                                                          |------>
  45.4    |                                                          |   37.0
          |                                                          |
          |                                                          |
COLDOUT   |                            LIQ                           | COLDIN
<------   |                                                          |<------
  35.2    |                                                          |   25.0
          |                                                          |
          ------------------------------------------------------------
                                   COLD

  ZONE HEAT TRANSFER AND AREA:

  ZONE        HEAT DUTY        AREA        LMTD        AVERAGE U        UA
              CAL/SEC          SQM          C          CAL/SEC-SQCM-K   CAL/SEC-K
    1     349489.860        155.2900       11.0855      0.0203        31526.8208

HEATX COLD-TQCU 402E     TQCURV INLET
-------------------------------------
  PRESSURE PROFILE:      CONSTANT2
  PRESSURE DROP:         0.0          BAR
  PROPERTY OPTION SET:   NRTL       RENON (NRTL) / IDEAL GAS

-----------------------------------------------------
!  DUTY      !  PRES      !  TEMP      !  VFRAC     !
!            !            !            !            !
!            !            !            !            !
!            !            !            !            !
!  CAL/SEC   !  BAR       !  C         !            !
!            !            !            !            !
!============!============!============!============!
!     0.0    !     1.0000 !    35.1815 !     0.0    !
!  1.6642+04 !     1.0000 !    34.6989 !     0.0    !
!  3.3285+04 !     1.0000 !    34.2161 !     0.0    !
!  4.9927+04 !     1.0000 !    33.7330 !     0.0    !
!  6.6569+04 !     1.0000 !    33.2497 !     0.0    !
!------------+------------+------------+------------!
!  8.3212+04 !     1.0000 !    32.7662 !     0.0    !
!  9.9854+04 !     1.0000 !    32.2825 !     0.0    !
!  1.1650+05 !     1.0000 !    31.7986 !     0.0    !
!  1.3314+05 !     1.0000 !    31.3144 !     0.0    !
!  1.4978+05 !     1.0000 !    30.8300 !     0.0    !
!------------+------------+------------+------------!
!  1.6642+05 !     1.0000 !    30.3453 !     0.0    !
!  1.8307+05 !     1.0000 !    29.8605 !     0.0    !
!  1.9971+05 !     1.0000 !    29.3754 !     0.0    !
!  2.1635+05 !     1.0000 !    28.8901 !     0.0    !
!  2.3299+05 !     1.0000 !    28.4046 !     0.0    !
!------------+------------+------------+------------!
!  2.4964+05 !     1.0000 !    27.9189 !     0.0    !
!  2.6628+05 !     1.0000 !    27.4329 !     0.0    !
!  2.8292+05 !     1.0000 !    26.9468 !     0.0    !
!  2.9956+05 !     1.0000 !    26.4604 !     0.0    !
!  3.1621+05 !     1.0000 !    25.9738 !     0.0    !
!------------+------------+------------+------------!
!  3.3285+05 !     1.0000 !    25.4870 !     0.0    !
```

```
!  3.4949+05 !     1.0000 !    25.0000 !     0.0    !
-----------------------------------------------------

HEATX HOT-TQCUR 402E     TQCURV INLET
------------------------------------
  PRESSURE PROFILE:      CONSTANT2
  PRESSURE DROP:         0.0         BAR
  PROPERTY OPTION SET:   NRTL      RENON (NRTL) / IDEAL GAS

-----------------------------------------------------
!  DUTY      !  PRES      !  TEMP      !  VFRAC     !
!            !            !            !            !
!            !            !            !            !
!            !            !            !            !
!  CAL/SEC   !  BAR       !  C         !            !
!            !            !            !            !
!============!============!============!============!
!     0.0    !     3.9100 !    45.4000 !     0.0    !
!  1.6642+04 !     3.9100 !    45.0017 !     0.0    !
!  3.3285+04 !     3.9100 !    44.6033 !     0.0    !
!  4.9927+04 !     3.9100 !    44.2047 !     0.0    !
!  6.6569+04 !     3.9100 !    43.8059 !     0.0    !
!------------+------------+------------+------------!
!  8.3212+04 !     3.9100 !    43.4069 !     0.0    !
!  9.9854+04 !     3.9100 !    43.0078 !     0.0    !
!  1.1650+05 !     3.9100 !    42.6085 !     0.0    !
!  1.3314+05 !     3.9100 !    42.2090 !     0.0    !
!  1.4978+05 !     3.9100 !    41.8093 !     0.0    !
!------------+------------+------------+------------!
!  1.6642+05 !     3.9100 !    41.4095 !     0.0    !
!  1.8307+05 !     3.9100 !    41.0095 !     0.0    !
!  1.9971+05 !     3.9100 !    40.6093 !     0.0    !
!  2.1635+05 !     3.9100 !    40.2089 !     0.0    !
!  2.3299+05 !     3.9100 !    39.8084 !     0.0    !
!------------+------------+------------+------------!
!  2.4964+05 !     3.9100 !    39.4077 !     0.0    !
!  2.6628+05 !     3.9100 !    39.0068 !     0.0    !
!  2.8292+05 !     3.9100 !    38.6058 !     0.0    !
!  2.9956+05 !     3.9100 !    38.2046 !     0.0    !
!  3.1621+05 !     3.9100 !    37.8032 !     0.0    !
!------------+------------+------------+------------!
!  3.3285+05 !     3.9100 !    37.4017 !     0.0    !
!  3.4949+05 !     3.9100 !    37.0000 !     0.0    !
-----------------------------------------------------

BLOCK:  407P     MODEL: PUMP
----------------------------
  INLET STREAM:          S124
  OUTLET STREAM:         S137
  PROPERTY OPTION SET:   NRTL      RENON (NRTL) / IDEAL GAS

                     ***  MASS AND ENERGY BALANCE  ***
                                  IN               OUT        RELATIVE DIFF.
   TOTAL BALANCE
      MOLE(KMOL/HR )            6916.66          6916.66          0.00000
      MASS(KG/HR   )            133456.          133456.          0.00000
      ENTHALPY(CAL/SEC )     -0.130779E+09    -0.130777E+09    -0.167486E-04

                     ***  CO2 EQUIVALENT SUMMARY ***
   FEED STREAMS CO2E             939.000      KG/HR
   PRODUCT STREAMS CO2E          939.000      KG/HR
   NET STREAMS CO2E PRODUCTION   0.00000      KG/HR
   UTILITIES CO2E PRODUCTION     0.00000      KG/HR
   TOTAL CO2E PRODUCTION         0.00000      KG/HR

                          ***  INPUT DATA  ***
   OUTLET PRESSURE  BAR                                    6.18000
   DRIVER EFFICIENCY                                       1.00000

   FLASH SPECIFICATIONS:
   LIQUID PHASE CALCULATION
   NO FLASH PERFORMED
```

```
   MAXIMUM NUMBER OF ITERATIONS                              30
   TOLERANCE                                                 0.000100000

                          ***  RESULTS  ***
   VOLUMETRIC FLOW RATE  L/MIN                          2,341.72
   PRESSURE CHANGE  BAR                                     1.72000
   NPSH AVAILABLE   M-KGF/KG                               22.9797
   FLUID POWER  KW                                          6.71293
   BRAKE POWER  KW                                          9.17064
   ELECTRICITY  KW                                          9.17064
   PUMP EFFICIENCY USED                                     0.73200
   NET WORK REQUIRED  KW                                    9.17064
   HEAD DEVELOPED M-KGF/KG                                 18.4653

BLOCK:  VALVE    MODEL: VALVE
------------------------------
  INLET STREAM:          S125
  OUTLET STREAM:         S141
  PROPERTY OPTION SET:   NRTL      RENON (NRTL) / IDEAL GAS

                     ***  MASS AND ENERGY BALANCE  ***
                                    IN               OUT        RELATIVE DIFF.
   TOTAL BALANCE
      MOLE(KMOL/HR )            6916.66          6916.66          0.00000
      MASS(KG/HR   )            133456.          133456.          0.00000
      ENTHALPY(CAL/SEC )     -0.129812E+09    -0.129812E+09     0.00000

                     ***  CO2 EQUIVALENT SUMMARY ***
   FEED STREAMS CO2E            939.000      KG/HR
   PRODUCT STREAMS CO2E         939.000      KG/HR
   NET STREAMS CO2E PRODUCTION  0.00000      KG/HR
   UTILITIES CO2E PRODUCTION    0.00000      KG/HR
   TOTAL CO2E PRODUCTION        0.00000      KG/HR

                          ***  INPUT DATA  ***

   VALVE OUTLET PRESSURE     BAR                            1.00000
   VALVE FLOW COEF CALC.                                 NO

                          FLASH SPECIFICATIONS:
   NPHASE                                                   2
   MAX NUMBER OF ITERATIONS                                30
   CONVERGENCE TOLERANCE                                    0.000100000

                          ***  RESULTS  ***

   VALVE PRESSURE DROP       BAR                            5.18000


CWI-315E CWI-402E CWO-315E CWO-402E S124
----------------------------------------

STREAM ID              CWI-315E   CWI-402E   CWO-315E   CWO-402E   S124
FROM :                 ----       ----       315E       402E       401E
TO   :                 315E       402E       ----       ----       407P

SUBSTREAM: MIXED
PHASE:                 LIQUID     LIQUID     LIQUID     LIQUID     LIQUID
COMPONENTS: KMOL/HR
  WATER              8326.2653  6938.5544  8326.2653  6938.5544  6736.9477
  BUTANOL               0.0        0.0        0.0        0.0      121.9463
  ETHANOL               0.0        0.0        0.0        0.0        3.2994
  ACETONE               0.0        0.0        0.0        0.0       27.6171
  CO2                   0.0        0.0        0.0        0.0       21.3362
  H2                    0.0        0.0        0.0        0.0        0.9921
  ACETI-01              0.0        0.0        0.0        0.0        1.6652
  N-BUT-01              0.0        0.0        0.0        0.0        2.8602
TOTAL FLOW:
  KMOL/HR            8326.2653  6938.5544  8326.2653  6938.5544  6916.6642
  KG/HR              1.5000+05  1.2500+05  1.5000+05  1.2500+05  1.3346+05
  L/MIN              2485.9556  2095.9995  2527.8733  2117.0342  2341.7205
STATE VARIABLES:
```

TEMP	C	12.8000	25.0000	30.1518	35.1815	53.2273
PRES	BAR	1.0000	1.0000	1.0000	1.0000	4.4600
VFRAC		0.0	0.0	0.0	0.0	0.0
LFRAC		1.0000	1.0000	1.0000	1.0000	1.0000
SFRAC		0.0	0.0	0.0	0.0	0.0
ENTHALPY:						
CAL/MOL		-6.8477+04	-6.8262+04	-6.8171+04	-6.8081+04	-6.8068+04
CAL/GM		-3801.0713	-3789.1277	-3784.0468	-3779.0624	-3527.8004
CAL/SEC		-1.5838+08	-1.3157+08	-1.5767+08	-1.3122+08	-1.3078+08
ENTROPY:						
CAL/MOL-K		-39.6982	-38.9652	-38.6620	-38.3695	-39.1492
CAL/GM-K		-2.2036	-2.1629	-2.1461	-2.1298	-2.0290
DENSITY:						
MOL/CC		5.5822-02	5.5173-02	5.4896-02	5.4625-02	4.9228-02
GM/CC		1.0056	0.9940	0.9890	0.9841	0.9498
AVG MW		18.0153	18.0153	18.0153	18.0153	19.2949

S125 S131 S136 S137 S141

STREAM ID		S125	S131	S136	S137	S141
FROM :		316E	401E	402E	407P	VALVE
TO :		VALVE	402E	----	315E	----
SUBSTREAM: MIXED						
PHASE:		LIQUID	LIQUID	LIQUID	LIQUID	MIXED
COMPONENTS: KMOL/HR						
WATER		6736.9477	8316.4958	8316.4958	6736.9477	6736.9477
BUTANOL		121.9463	0.0	0.0	121.9463	121.9463
ETHANOL		3.2994	0.0	0.0	3.2994	3.2994
ACETONE		27.6171	0.0	0.0	27.6171	27.6171
CO2		21.3362	0.0	0.0	21.3362	21.3362
H2		0.9921	0.0	0.0	0.9921	0.9921
ACETI-01		1.6652	0.0	0.0	1.6652	1.6652
N-BUT-01		2.8602	0.0	0.0	2.8602	2.8602
TOTAL FLOW:						
KMOL/HR		6916.6642	8316.4958	8316.4958	6916.6642	6916.6642
KG/HR		1.3346+05	1.4982+05	1.4982+05	1.3346+05	1.3346+05
L/MIN		2410.0626	2563.5772	2542.0472	2341.8710	9640.5940
STATE VARIABLES:						
TEMP	C	78.7708	45.4000	37.0000	53.2862	78.1442
PRES	BAR	6.1800	3.9100	3.9100	6.1800	1.0000
VFRAC		0.0	0.0	0.0	0.0	2.1508-03
LFRAC		1.0000	1.0000	1.0000	1.0000	0.9978
SFRAC		0.0	0.0	0.0	0.0	0.0
ENTHALPY:						
CAL/MOL		-6.7565+04	-6.7897+04	-6.8048+04	-6.8067+04	-6.7565+04
CAL/GM		-3501.7147	-3768.8565	-3777.2541	-3527.7414	-3501.7147
CAL/SEC		-1.2981+08	-1.5685+08	-1.5720+08	-1.3078+08	-1.2981+08
ENTROPY:						
CAL/MOL-K		-37.6793	-37.7853	-38.2646	-39.1457	-37.6779
CAL/GM-K		-1.9528	-2.0974	-2.1240	-2.0288	-1.9527
DENSITY:						
MOL/CC		4.7832-02	5.4068-02	5.4526-02	4.9225-02	1.1958-02
GM/CC		0.9229	0.9741	0.9823	0.9498	0.2307
AVG MW		19.2949	18.0153	18.0153	19.2949	19.2949

S153 S157 S160 S182 S2-137

STREAM ID		S153	S157	S160	S182	S2-137
FROM :		----	----	316E	322P	315E
TO :		316E	401E	322P	401E	316E
SUBSTREAM: MIXED						
PHASE:		LIQUID	LIQUID	LIQUID	LIQUID	LIQUID
COMPONENTS: KMOL/HR						
WATER		8316.4958	6736.9477	8316.4958	8316.4958	6736.9477
BUTANOL		0.0	121.9463	0.0	0.0	121.9463
ETHANOL		0.0	3.2994	0.0	0.0	3.2994
ACETONE		0.0	27.6171	0.0	0.0	27.6171
CO2		0.0	21.3362	0.0	0.0	21.3362

H2	0.0	0.9921	0.0	0.0	0.9921
ACETI-01	0.0	1.6652	0.0	0.0	1.6652
N-BUT-01	0.0	2.8602	0.0	0.0	2.8602
TOTAL FLOW:					
KMOL/HR	8316.4958	6916.6642	8316.4958	8316.4958	6916.6642
KG/HR	1.4982+05	1.3346+05	1.4982+05	1.4982+05	1.3346+05
L/MIN	2712.3794	2301.3829	2601.1000	2601.2708	2294.1631
STATE VARIABLES:					
TEMP C	97.8000	37.0000	59.5200	59.5828	34.0000
PRES BAR	2.0000	4.4600	2.0000	3.9100	6.1800
VFRAC	0.0	0.0	0.0	0.0	0.0
LFRAC	1.0000	1.0000	1.0000	1.0000	1.0000
SFRAC	0.0	0.0	0.0	0.0	0.0
ENTHALPY:					
CAL/MOL	-6.6915+04	-6.8380+04	-6.7639+04	-6.7638+04	-6.8436+04
CAL/GM	-3714.3283	-3543.9266	-3754.5562	-3754.4921	-3546.8764
CAL/SEC	-1.5458+08	-1.3138+08	-1.5626+08	-1.5625+08	-1.3149+08
ENTROPY:					
CAL/MOL-K	-34.9608	-40.1206	-36.9980	-36.9946	-40.3038
CAL/GM-K	-1.9406	-2.0793	-2.0537	-2.0535	-2.0888
DENSITY:					
MOL/CC	5.1102-02	5.0091-02	5.3288-02	5.3285-02	5.0248-02
GM/CC	0.9206	0.9665	0.9600	0.9599	0.9695
AVG MW	18.0153	19.2949	18.0153	18.0153	19.2949

Fermentation Flash Vessel, 405V A-C: Input Summary, Block Report and Stream Report

```
;
;Input Summary created by Aspen Plus Rel. 34.0 at 20:05:42 Thu Apr 7, 2016
;Directory \\base\root\homedir  Filename
C:\Users\shaulson\AppData\Local\Temp\~apb0d3.txt
;


DYNAMICS
    DYNAMICS RESULTS=ON

IN-UNITS MET PRESSURE=bar TEMPERATURE=C DELTA-T=C PDROP=bar  &
        INVERSE-PRES='1/bar'

DEF-STREAMS CONVEN ALL

DATABANKS 'APV88 PURE32' / 'APV88 AQUEOUS' / 'APV88 SOLIDS' /  &
        'APV88 INORGANIC' / 'APEOSV88 AP-EOS' / NOASPENPCD

PROP-SOURCES 'APV88 PURE32' / 'APV88 AQUEOUS' / 'APV88 SOLIDS' &
         / 'APV88 INORGANIC' / 'APEOSV88 AP-EOS'

COMPONENTS
    WATER H2O /
    CO2 CO2 /
    ETHANOL C2H6O-2 /
    BUTANOL C4H10O-1 /
    ACETONE C3H6O-1 /
    NITROGEN N2 /
    ACETI-01 C2H4O2-1 /
    N-BUT-01 C4H8O2-1 /
    HYDROGEN H2

SOLVE
    RUN-MODE MODE=SIM

FLOWSHEET
    BLOCK 405V IN=S-REACT OUT=S-129 S-132

PROPERTIES NRTL
    PROPERTIES WILSON
```

```
ESTIMATE ALL
    NRTL ALL ALL UNIFAC

PROP-DATA NRTL-1
    IN-UNITS MET PRESSURE=bar TEMPERATURE=C DELTA-T=C PDROP=bar  &
        INVERSE-PRES='1/bar'
    PROP-LIST NRTL
    BPVAL WATER ETHANOL 3.457800000 -586.0809000 .3000000000  &
        0.0 0.0 0.0 24.99000000 100.0000000
    BPVAL ETHANOL WATER -.8009000000 246.1800000 .3000000000  &
        0.0 0.0 0.0 24.99000000 100.0000000
    BPVAL WATER BUTANOL 13.11020000 -3338.953600 .3000000000  &
        0.0 0.0 0.0 19.17000000 117.6000000
    BPVAL BUTANOL WATER -2.040500000 763.8692000 .3000000000  &
        0.0 0.0 0.0 19.17000000 117.6000000
    BPVAL WATER ACETONE .0544000000 419.9716000 .3000000000 0.0  &
        0.0 0.0 20.00000000 95.10000000
    BPVAL ACETONE WATER 6.398100000 -1808.991000 .3000000000  &
        0.0 0.0 0.0 20.00000000 95.10000000
    BPVAL WATER N-BUT-01 2.644200000 90.10910000 .3000000000  &
        0.0 0.0 0.0 51.40000000 163.9000000
    BPVAL N-BUT-01 WATER -2.119600000 735.8086000 .3000000000  &
        0.0 0.0 0.0 51.40000000 163.9000000
    BPVAL ETHANOL BUTANOL 0.0 -85.21880000 .3000000000 0.0 0.0  &
        0.0 70.00000000 110.9500000
    BPVAL BUTANOL ETHANOL 0.0 128.5015000 .3000000000 0.0 0.0  &
        0.0 70.00000000 110.9500000
    BPVAL ETHANOL ACETONE -1.078700000 479.0500000 .3000000000  &
        0.0 0.0 0.0 25.00000000 78.30000000
    BPVAL ACETONE ETHANOL -.3471000000 206.5973000 .3000000000  &
        0.0 0.0 0.0 25.00000000 78.30000000
    BPVAL BUTANOL ACETONE 10.29790000 -3326.538100 .3000000000  &
        0.0 0.0 0.0 58.10000000 115.0000000
    BPVAL ACETONE BUTANOL -8.887500000 3077.281000 .3000000000  &
        0.0 0.0 0.0 58.10000000 115.0000000
    BPVAL ACETI-01 N-BUT-01 3.296700000 0.0 .3000000000 0.0  &
        0.0 0.0 358.2000000 358.2000000
    BPVAL N-BUT-01 ACETI-01 -1.734300000 0.0 .3000000000 0.0  &
        0.0 0.0 358.2000000 358.2000000
    BPVAL WATER CO2 0.0 291.4104250 .3000000000 0.0 0.0 0.0  &
        25.00000000 25.00000000
    BPVAL CO2 WATER 0.0 177.4011640 .3000000000 0.0 0.0 0.0  &
        25.00000000 25.00000000
    BPVAL WATER NITROGEN 0.0 -35.82780730 .3000000000 0.0 0.0  &
        0.0 25.00000000 25.00000000
    BPVAL NITROGEN WATER 0.0 142.4194540 .3000000000 0.0 0.0  &
        0.0 25.00000000 25.00000000
    BPVAL WATER ACETI-01 0.0 574.5820750 .3000000000 0.0 0.0  &
        0.0 25.00000000 25.00000000
    BPVAL ACETI-01 WATER 0.0 -169.1624370 .3000000000 0.0 0.0  &
        0.0 25.00000000 25.00000000
    BPVAL CO2 ETHANOL 0.0 -656.2632280 .3000000000 0.0 0.0  &
        0.0 25.00000000 25.00000000
    BPVAL ETHANOL CO2 0.0 1097.878540 .3000000000 0.0 0.0 0.0  &
        25.00000000 25.00000000
    BPVAL CO2 BUTANOL 0.0 -908.2809200 .3000000000 0.0 0.0  &
        0.0 25.00000000 25.00000000
    BPVAL BUTANOL CO2 0.0 1964.106030 .3000000000 0.0 0.0 0.0  &
        25.00000000 25.00000000
    BPVAL CO2 ACETONE 0.0 -561.9185920 .3000000000 0.0 0.0  &
        0.0 25.00000000 25.00000000
    BPVAL ACETONE CO2 0.0 877.1224340 .3000000000 0.0 0.0 0.0  &
        25.00000000 25.00000000
    BPVAL CO2 NITROGEN 0.0 -89.04088690 .3000000000 0.0 0.0  &
        0.0 25.00000000 25.00000000
    BPVAL NITROGEN CO2 0.0 176.3832630 .3000000000 0.0 0.0  &
        0.0 25.00000000 25.00000000
    BPVAL CO2 ACETI-01 0.0 199.0025070 .3000000000 0.0 0.0  &
        0.0 25.00000000 25.00000000
    BPVAL ACETI-01 CO2 0.0 -334.5472390 .3000000000 0.0 0.0  &
        0.0 25.00000000 25.00000000
```

```
BPVAL CO2 N-BUT-01 0.0 -894.0607820 .3000000000 0.0 0.0  &
    0.0 25.00000000 25.00000000
BPVAL N-BUT-01 CO2 0.0 1910.352690 .3000000000 0.0 0.0  &
    0.0 25.00000000 25.00000000
BPVAL ETHANOL NITROGEN 0.0 1878.137200 .3000000000 0.0 0.0  &
    0.0 25.00000000 25.00000000
BPVAL NITROGEN ETHANOL 0.0 -889.2012490 .3000000000 0.0  &
    0.0 0.0 25.00000000 25.00000000
BPVAL ETHANOL ACETI-01 0.0 -153.7453710 .3000000000 0.0  &
    0.0 0.0 25.00000000 25.00000000
BPVAL ACETI-01 ETHANOL 0.0 169.0018730 .3000000000 0.0 0.0  &
    0.0 25.00000000 25.00000000
BPVAL ETHANOL N-BUT-01 0.0 207.6136130 .3000000000 0.0 0.0  &
    0.0 25.00000000 25.00000000
BPVAL N-BUT-01 ETHANOL 0.0 -171.1674830 .3000000000 0.0  &
    0.0 0.0 25.00000000 25.00000000
BPVAL BUTANOL NITROGEN 0.0 3264.176160 .3000000000 0.0 0.0  &
    0.0 25.00000000 25.00000000
BPVAL NITROGEN BUTANOL 0.0 -1151.181350 .3000000000 0.0  &
    0.0 0.0 25.00000000 25.00000000
BPVAL BUTANOL ACETI-01 0.0 -316.8870460 .3000000000 0.0  &
    0.0 0.0 25.00000000 25.00000000
BPVAL ACETI-01 BUTANOL 0.0 473.6665180 .3000000000 0.0 0.0  &
    0.0 25.00000000 25.00000000
BPVAL BUTANOL N-BUT-01 0.0 -290.3077230 .3000000000 0.0  &
    0.0 0.0 25.00000000 25.00000000
BPVAL N-BUT-01 BUTANOL 0.0 367.6992270 .3000000000 0.0 0.0  &
    0.0 25.00000000 25.00000000
BPVAL ACETONE NITROGEN 0.0 1320.705450 .3000000000 0.0 0.0  &
    0.0 25.00000000 25.00000000
BPVAL NITROGEN ACETONE 0.0 -725.8181620 .3000000000 0.0  &
    0.0 0.0 25.00000000 25.00000000
BPVAL ACETONE ACETI-01 0.0 767.8964580 .3000000000 0.0 0.0  &
    0.0 25.00000000 25.00000000
BPVAL ACETI-01 ACETONE 0.0 -442.0230100 .3000000000 0.0  &
    0.0 0.0 25.00000000 25.00000000
BPVAL ACETONE N-BUT-01 0.0 726.3063860 .3000000000 0.0 0.0  &
    0.0 25.00000000 25.00000000
BPVAL N-BUT-01 ACETONE 0.0 -433.9523650 .3000000000 0.0  &
    0.0 0.0 25.00000000 25.00000000
BPVAL NITROGEN ACETI-01 0.0 234.5858910 .3000000000 0.0  &
    0.0 0.0 25.00000000 25.00000000
BPVAL ACETI-01 NITROGEN 0.0 -436.4418880 .3000000000 0.0  &
    0.0 0.0 25.00000000 25.00000000
BPVAL NITROGEN N-BUT-01 0.0 -1050.236760 .3000000000 0.0  &
    0.0 0.0 25.00000000 25.00000000
BPVAL N-BUT-01 NITROGEN 0.0 2663.279220 .3000000000 0.0  &
    0.0 0.0 25.00000000 25.00000000
BPVAL WATER HYDROGEN 0.0 638.3454290 .3000000000 0.0 0.0  &
    0.0 25.00000000 25.00000000
BPVAL HYDROGEN WATER 0.0 -449.6704120 .3000000000 0.0 0.0  &
    0.0 25.00000000 25.00000000
BPVAL CO2 HYDROGEN 0.0 -274.9150480 .3000000000 0.0 0.0  &
    0.0 25.00000000 25.00000000
BPVAL HYDROGEN CO2 0.0 390.3186610 .3000000000 0.0 0.0  &
    0.0 25.00000000 25.00000000
BPVAL ETHANOL HYDROGEN 0.0 3829.601660 .3000000000 0.0 0.0  &
    0.0 25.00000000 25.00000000
BPVAL HYDROGEN ETHANOL 0.0 -1223.635380 .3000000000 0.0  &
    0.0 0.0 25.00000000 25.00000000
BPVAL BUTANOL HYDROGEN 0.0 11693.13280 .3000000000 0.0 0.0  &
    0.0 25.00000000 25.00000000
BPVAL HYDROGEN BUTANOL 0.0 -1863.936630 .3000000000 0.0  &
    0.0 0.0 25.00000000 25.00000000
BPVAL ACETONE HYDROGEN 0.0 2566.188830 .3000000000 0.0 0.0  &
    0.0 25.00000000 25.00000000
BPVAL HYDROGEN ACETONE 0.0 -1019.471720 .3000000000 0.0  &
    0.0 0.0 25.00000000 25.00000000
BPVAL NITROGEN HYDROGEN 0.0 445.3660420 .3000000000 0.0  &
    0.0 0.0 25.00000000 25.00000000
BPVAL HYDROGEN NITROGEN 0.0 -343.6977260 .3000000000 0.0  &
    0.0 0.0 25.00000000 25.00000000
```

```
    BPVAL ACETI-01 HYDROGEN 0.0 2537.416360 .3000000000 0.0  &
        0.0 0.0 25.00000000 25.00000000
    BPVAL HYDROGEN ACETI-01 0.0 -1018.877260 .3000000000 0.0  &
        0.0 0.0 25.00000000 25.00000000
    BPVAL N-BUT-01 HYDROGEN 0.0 6961.703060 .3000000000 0.0  &
        0.0 0.0 25.00000000 25.00000000
    BPVAL HYDROGEN N-BUT-01 0.0 -1550.729550 .3000000000 0.0  &
        0.0 0.0 25.00000000 25.00000000

PROP-DATA WILSON-1
    IN-UNITS MET PRESSURE=bar TEMPERATURE=C DELTA-T=C PDROP=bar  &
        INVERSE-PRES='1/bar'
    PROP-LIST WILSON
    BPVAL WATER ETHANOL -.0503000000 -69.63720000 0.0 0.0  &
        24.99000000 100.0000000 0.0
    BPVAL ETHANOL WATER -2.503500000 346.1512000 0.0 0.0  &
        24.99000000 100.0000000 0.0
    BPVAL WATER BUTANOL 1.104800000 -588.7333000 0.0 0.0  &
        19.17000000 117.6000000 0.0
    BPVAL BUTANOL WATER 22.77770000 -10000.00000 0.0 0.0  &
        19.17000000 117.6000000 0.0
    BPVAL WATER ACETONE -9.705100000 2719.214400 0.0 0.0  &
        20.00000000 95.10000000 0.0
    BPVAL ACETONE WATER -.4374000000 -291.0787000 0.0 0.0  &
        20.00000000 95.10000000 0.0
    BPVAL WATER N-BUT-01 2.859700000 -1150.658900 0.0 0.0  &
        51.40000000 163.9000000 0.0
    BPVAL N-BUT-01 WATER -2.964600000 -153.9012000 0.0 0.0  &
        51.40000000 163.9000000 0.0
    BPVAL ETHANOL BUTANOL 0.0 -91.42160000 0.0 0.0 70.00000000  &
        110.9500000 0.0
    BPVAL BUTANOL ETHANOL 0.0 50.59480000 0.0 0.0 70.00000000  &
        110.9500000 0.0
    BPVAL ETHANOL ACETONE .7465000000 -346.0390000 0.0 0.0  &
        25.00000000 78.30000000 0.0
    BPVAL ACETONE ETHANOL .8542000000 -405.2145000 0.0 0.0  &
        25.00000000 78.30000000 0.0
    BPVAL BUTANOL ACETONE 8.926300000 -3072.782200 0.0 0.0  &
        58.10000000 115.0000000 0.0
    BPVAL ACETONE BUTANOL -14.01220000 4527.316400 0.0 0.0  &
        58.10000000 115.0000000 0.0
    BPVAL ACETI-01 N-BUT-01 1.305600000 0.0 0.0 0.0  &
        358.2000000 358.2000000 0.0
    BPVAL N-BUT-01 ACETI-01 -4.186800000 0.0 0.0 0.0  &
        358.2000000 358.2000000 0.0

STREAM S-REACT
    SUBSTREAM MIXED TEMP=37.00000000 PRES=1.010000000
    MASS-FLOW WATER 1.06812000E+5 / CO2 15566.18000 / ETHANOL  &
        157.6800000 / BUTANOL 9145.680001 / ACETONE  &
        1892.210000 / ACETI-01 104.9899997 / N-BUT-01  &
        253.5399997 / HYDROGEN 278.323721

BLOCK 405V FLASH2
    PARAM TEMP=37.00000000 PRES=1.010000000

EO-CONV-OPTI

STREAM-REPOR MOLEFLOW

PROPERTY-REP PCES
;
;
;
;
;


BLOCK:  405V     MODEL: FLASH2
 ------------------------------
   INLET STREAM:          S-REACT
   OUTLET VAPOR STREAM:   S-129
```

```
  OUTLET LIQUID STREAM:  S-132
  PROPERTY OPTION SET:   NRTL      RENON (NRTL) / IDEAL GAS

                     ***  MASS AND ENERGY BALANCE  ***
                                  IN               OUT        RELATIVE DIFF.
   TOTAL BALANCE
      MOLE(KMOL/HR )            6584.74          6584.74         0.00000
      MASS(KG/HR   )             134211.          134211.       0.216852E-15
      ENTHALPY(CAL/SEC )      -0.124954E+09    -0.124954E+09    0.119253E-15

                     ***  CO2 EQUIVALENT SUMMARY ***
   FEED STREAMS CO2E             15566.2      KG/HR
   PRODUCT STREAMS CO2E          15566.2      KG/HR
   NET STREAMS CO2E PRODUCTION   0.00000      KG/HR
   UTILITIES CO2E PRODUCTION     0.00000      KG/HR
   TOTAL CO2E PRODUCTION         0.00000      KG/HR

                          ***  INPUT DATA  ***
  TWO    PHASE  TP  FLASH
  SPECIFIED TEMPERATURE C                                    37.0000
  SPECIFIED PRESSURE    BAR                                   1.01000
  MAXIMUM NO. ITERATIONS                                     30
  CONVERGENCE TOLERANCE                                       0.000100000

                          ***  RESULTS  ***
  OUTLET TEMPERATURE    C                                     37.000
  OUTLET PRESSURE       BAR                                    1.0100
  HEAT DUTY             CAL/SEC                           -0.97648E-08
  VAPOR FRACTION                                           0.75797E-01


  V-L PHASE EQUILIBRIUM :

     COMP            F(I)          X(I)          Y(I)          K(I)
     WATER         0.90041       0.97044       0.46478E-01   0.47893E-01
     CO2           0.53715E-01   0.35066E-02   0.66591        189.90
     ETHANOL       0.51979E-03   0.54221E-03   0.24641E-03   0.45445
     BUTANOL       0.18738E-01   0.20040E-01   0.28678E-02   0.14311
     ACETONE       0.49477E-02   0.45380E-02   0.99437E-02    2.1912
     ACETI-01      0.26551E-03   0.28529E-03   0.24355E-04   0.85369E-01
     N-BUT-01      0.43702E-03   0.47149E-03   0.16709E-04   0.35439E-01
     HYDROGEN      0.20967E-01   0.17372E-03   0.27451        1580.2


S-129 S-132 S-REACT
-------------------

STREAM ID              S-129      S-132      S-REACT
FROM :                 405V       405V       ----
TO   :                 ----       ----       405V

SUBSTREAM: MIXED
PHASE:                 VAPOR      LIQUID     MIXED
COMPONENTS: KMOL/HR
  WATER                23.1972  5905.7698  5928.9670
  CO2                 332.3584    21.3397   353.6980
  ETHANOL               0.1230     3.2997     3.4227
  BUTANOL               1.4313   121.9542   123.3855
  ACETONE               4.9629    27.6164    32.5794
  NITROGEN              0.0        0.0        0.0
  ACETI-01          1.2155-02      1.7361     1.7483
  N-BUT-01          8.3397-03      2.8693     2.8777
  HYDROGEN            137.0084     1.0572   138.0656
TOTAL FLOW:
  KMOL/HR             499.1017  6085.6425  6584.7441
  KG/HR              1.5723+04  1.1849+05  1.3421+05
  L/MIN              2.0909+05  2037.1713  2.1113+05
STATE VARIABLES:
  TEMP   C             37.0000    37.0000    37.0000
  PRES   BAR            1.0100     1.0100     1.0100
  VFRAC                 1.0000     0.0     7.5797-02
```

```
   LFRAC                  0.0        1.0000     0.9242
   SFRAC                  0.0        0.0        0.0
 ENTHALPY:
   CAL/MOL           -6.5930+04 -6.8510+04 -6.8315+04
   CAL/GM            -2092.9108 -3518.7418 -3351.7076
   CAL/SEC           -9.1405+06 -1.1581+08 -1.2495+08
 ENTROPY:
   CAL/MOL-K             1.0144   -40.6639   -37.5048
   CAL/GM-K           3.2201-02    -2.0885    -1.8401
 DENSITY:
   MOL/CC             3.9783-05  4.9788-02  5.1980-04
   GM/CC              1.2532-03     0.9694  1.0595-02
 AVG MW                 31.5018    19.4701    20.3821
```

Vapor Separation Analysis, S-129, P-T Trial: Input Summary, Block Report and Stream Report

```
;
;Input Summary created by Aspen Plus Rel. 34.0 at 22:48:55 Sun Apr 10, 2016
;Directory \\base\root\homedir  Filename
C:\Users\shaulson\AppData\Local\Temp\~apcb27.txt
;


DYNAMICS
    DYNAMICS RESULTS=ON

IN-UNITS MET PRESSURE=bar TEMPERATURE=C DELTA-T=C PDROP=bar  &
        INVERSE-PRES='1/bar'

DEF-STREAMS CONVEN ALL

DATABANKS 'APV88 PURE32' / 'APV88 AQUEOUS' / 'APV88 SOLIDS' /  &
        'APV88 INORGANIC' / 'APEOSV88 AP-EOS' / NOASPENPCD

PROP-SOURCES 'APV88 PURE32' / 'APV88 AQUEOUS' / 'APV88 SOLIDS' &
         / 'APV88 INORGANIC' / 'APEOSV88 AP-EOS'

COMPONENTS
    WATER H2O /
    CO2 CO2 /
    ACETONE C3H6O-1 /
    BUTANOL C4H10O-1 /
    ETHANOL C2H6O-2 /
    HYDROGEN H2 /
    ACETI-01 C2H4O2-1 /
    N-BUT-01 C4H8O2-1

SOLVE
    RUN-MODE MODE=SIM

FLOWSHEET
    BLOCK B1 IN=1 OUT=2 3

PROPERTIES NRTL

PROP-DATA NRTL-1
    IN-UNITS MET PRESSURE=bar TEMPERATURE=C DELTA-T=C PDROP=bar  &
        INVERSE-PRES='1/bar'
    PROP-LIST NRTL
    BPVAL WATER ACETONE .0544000000 419.9716000 .3000000000 0.0  &
        0.0 0.0 20.00000000 95.10000000
    BPVAL ACETONE WATER 6.398100000 -1808.991000 .3000000000  &
        0.0 0.0 0.0 20.00000000 95.10000000
    BPVAL WATER BUTANOL 13.11020000 -3338.953600 .3000000000  &
        0.0 0.0 0.0 19.17000000 117.6000000
```

```
    BPVAL BUTANOL WATER -2.040500000 763.8692000 .3000000000  &
        0.0 0.0 0.0 19.17000000 117.6000000
    BPVAL WATER ETHANOL 3.457800000 -586.0809000 .3000000000  &
        0.0 0.0 0.0 24.99000000 100.0000000
    BPVAL ETHANOL WATER -.8009000000 246.1800000 .3000000000  &
        0.0 0.0 0.0 24.99000000 100.0000000
    BPVAL WATER N-BUT-01 2.644200000 90.10910000 .3000000000  &
        0.0 0.0 0.0 51.40000000 163.9000000
    BPVAL N-BUT-01 WATER -2.119600000 735.8086000 .3000000000  &
        0.0 0.0 0.0 51.40000000 163.9000000
    BPVAL ACETONE BUTANOL -8.887500000 3077.281000 .3000000000  &
        0.0 0.0 0.0 58.10000000 115.0000000
    BPVAL BUTANOL ACETONE 10.29790000 -3326.538100 .3000000000  &
        0.0 0.0 0.0 58.10000000 115.0000000
    BPVAL ACETONE ETHANOL -.3471000000 206.5973000 .3000000000  &
        0.0 0.0 0.0 25.00000000 78.30000000
    BPVAL ETHANOL ACETONE -1.078700000 479.0500000 .3000000000  &
        0.0 0.0 0.0 25.00000000 78.30000000
    BPVAL BUTANOL ETHANOL 0.0 128.5015000 .3000000000 0.0 0.0  &
        0.0 70.00000000 110.9500000
    BPVAL ETHANOL BUTANOL 0.0 -85.21880000 .3000000000 0.0 0.0  &
        0.0 70.00000000 110.9500000
    BPVAL ACETI-01 N-BUT-01 3.296700000 0.0 .3000000000 0.0  &
        0.0 0.0 358.2000000 358.2000000
    BPVAL N-BUT-01 ACETI-01 -1.734300000 0.0 .3000000000 0.0  &
        0.0 0.0 358.2000000 358.2000000

STREAM 1
    SUBSTREAM MIXED TEMP=32.2 PRES=1.01
    MASS-FLOW WATER 260. / CO2 14600. / ACETONE 290. /  &
        BUTANOL 106. / ETHANOL 5.7 / HYDROGEN 276. /  &
        ACETI-01 0.7 / N-BUT-01 0.7

BLOCK B1 FLASH2
    PARAM TEMP=-25. PRES=6.

EO-CONV-OPTI

CONV-OPTIONS
    PARAM TOL=0.1

STREAM-REPOR MOLEFLOW
;
;
;
;
;

 BLOCK:  B1       MODEL: FLASH2
 ------------------------------
   INLET STREAM:          1
   OUTLET VAPOR STREAM:   2
   OUTLET LIQUID STREAM:  3
   PROPERTY OPTION SET:   NRTL      RENON (NRTL) / IDEAL GAS

                      ***  MASS AND ENERGY BALANCE  ***
                                   IN               OUT        RELATIVE DIFF.
    TOTAL BALANCE
       MOLE(KMOL/HR )            489.656          489.656          0.00000
       MASS(KG/HR   )            15539.1          15539.1         0.234118E-15
       ENTHALPY(CAL/SEC )     -0.898444E+07    -0.912254E+07    0.151378E-01

                      ***  CO2 EQUIVALENT SUMMARY ***
    FEED STREAMS CO2E            14600.0      KG/HR
    PRODUCT STREAMS CO2E         14600.0      KG/HR
    NET STREAMS CO2E PRODUCTION  0.00000      KG/HR
    UTILITIES CO2E PRODUCTION    0.00000      KG/HR
    TOTAL CO2E PRODUCTION        0.00000      KG/HR

                         ***  INPUT DATA  ***
   TWO    PHASE  TP  FLASH
   SPECIFIED TEMPERATURE C                                -25.0000
```

SPECIFIED PRESSURE	BAR	6.00000
MAXIMUM NO. ITERATIONS		30
CONVERGENCE TOLERANCE		0.000100000

*** RESULTS ***

OUTLET TEMPERATURE	C	-25.000
OUTLET PRESSURE	BAR	6.0000
HEAT DUTY	CAL/SEC	-0.13810E+06
VAPOR FRACTION		0.94425

V-L PHASE EQUILIBRIUM :

COMP	F(I)	X(I)	Y(I)	K(I)
WATER	0.29474E-01	0.52737	0.79392E-04	0.15054E-03
CO2	0.67750	0.23999	0.70333	2.9307
ACETONE	0.10197E-01	0.17495	0.47056E-03	0.26897E-02
BUTANOL	0.29205E-02	0.52385E-01	0.24773E-06	0.47291E-05
ETHANOL	0.25268E-03	0.44660E-02	0.39388E-05	0.88196E-03
HYDROGEN	0.27961	0.11791E-03	0.29611	2511.4
ACETI-01	0.23805E-04	0.42618E-03	0.50294E-07	0.11801E-03
N-BUT-01	0.16226E-04	0.29102E-03	0.23327E-08	0.80157E-05

1 2 3

STREAM ID	1	2	3
FROM :	----	B1	B1
TO :	B1	----	----
SUBSTREAM: MIXED			
PHASE:	VAPOR	VAPOR	LIQUID
COMPONENTS: KMOL/HR			
WATER	14.4322	3.6708-02	14.3955
CO2	331.7443	325.1934	6.5509
ACETONE	4.9931	0.2176	4.7755
BUTANOL	1.4301	1.1454-04	1.4299
ETHANOL	0.1237	1.8211-03	0.1219
HYDROGEN	136.9129	136.9097	3.2185-03
ACETI-01	1.1656-02	2.3254-05	1.1633-02
N-BUT-01	7.9449-03	1.0786-06	7.9439-03
TOTAL FLOW:			
KMOL/HR	489.6559	462.3593	27.2966
KG/HR	1.5539+04	1.4601+04	938.0194
L/MIN	2.0514+05	2.6498+04	15.8422
STATE VARIABLES:			
TEMP C	32.2000	-25.0000	-25.0000
PRES BAR	1.0100	6.0000	6.0000
VFRAC	1.0000	1.0000	0.0
LFRAC	0.0	0.0	1.0000
SFRAC	0.0	0.0	0.0
ENTHALPY:			
CAL/MOL	-6.6055+04	-6.6537+04	-7.6089+04
CAL/GM	-2081.4583	-2106.9790	-2214.1983
CAL/SEC	-8.9844+06	-8.5456+06	-5.7693+05
ENTROPY:			
CAL/MOL-K	1.0988	-3.3354	-50.3348
CAL/GM-K	3.4625-02	-0.1056	-1.4648
DENSITY:			
MOL/CC	3.9783-05	2.9081-04	2.8717-02
GM/CC	1.2625-03	9.1836-03	0.9868
AVG MW	31.7347	31.5795	34.3640

Vapor Separation, Thermox: Flowsheet

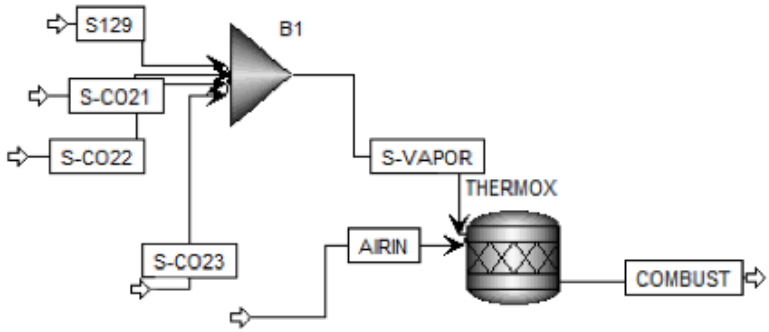

Figure B2. Combustion of S-129 with the ABE separation vapor streams, S-CO21, S-CO22, S-CO23

Vapor Combustion, Thermox: Input Summary, Block Report, Stream Report

```
;
;Input Summary created by Aspen Plus Rel. 34.0 at 22:15:41 Thu Apr 7, 2016
;Directory \\base\root\homedir\SeniorDesign_FinalCombustion  Filename
C:\Users\shaulson\AppData\Local\Temp\~ap6c10.txt
;


DYNAMICS
    DYNAMICS RESULTS=ON

IN-UNITS MET PRESSURE=bar TEMPERATURE=C DELTA-T=C PDROP=bar  &
        INVERSE-PRES='1/bar'

DEF-STREAMS CONVEN ALL

MODEL-OPTION

DATABANKS 'APV88 PURE32' / 'APV88 AQUEOUS' / 'APV88 SOLIDS' /  &
        'APV88 INORGANIC' / 'APEOSV88 AP-EOS' / NOASPENPCD

PROP-SOURCES 'APV88 PURE32' / 'APV88 AQUEOUS' / 'APV88 SOLIDS' &
         / 'APV88 INORGANIC' / 'APEOSV88 AP-EOS'

COMPONENTS
    WATER H2O /
    CO2 CO2 /
    H2 H2 /
    O2 O2 /
    ACETONE C3H6O-1 /
    ETHANOL C2H6O-2 /
    BUTANOL C4H10O-1 /
    ACETI-01 C2H4O2-1 /
    N-BUT-01 C4H8O2-1 /
    NITROGEN N2 /
    CO CO /
    NO NO /
    1:3:5-01 C9H12-8

SOLVE
    RUN-MODE MODE=SIM

FLOWSHEET
    BLOCK THERMOX IN=AIRIN S-VAPOR OUT=COMBUST
    BLOCK B1 IN=S129 S-CO23 S-CO22 S-CO21 OUT=S-VAPOR

PROPERTIES NRTL

PROP-DATA NRTL-1
```

```
    IN-UNITS MET PRESSURE=bar TEMPERATURE=C DELTA-T=C PDROP=bar  &
        INVERSE-PRES='1/bar'
    PROP-LIST NRTL
    BPVAL WATER ACETONE .0544000000 419.9716000 .3000000000 0.0  &
        0.0 0.0 20.00000000 95.10000000
    BPVAL ACETONE WATER 6.398100000 -1808.991000 .3000000000  &
        0.0 0.0 0.0 20.00000000 95.10000000
    BPVAL WATER ETHANOL 3.457800000 -586.0809000 .3000000000  &
        0.0 0.0 0.0 24.99000000 100.0000000
    BPVAL ETHANOL WATER -.8009000000 246.1800000 .3000000000  &
        0.0 0.0 0.0 24.99000000 100.0000000
    BPVAL WATER BUTANOL 13.11020000 -3338.953600 .3000000000  &
        0.0 0.0 0.0 19.17000000 117.6000000
    BPVAL BUTANOL WATER -2.040500000 763.8692000 .3000000000  &
        0.0 0.0 0.0 19.17000000 117.6000000
    BPVAL WATER N-BUT-01 2.644200000 90.10910000 .3000000000  &
        0.0 0.0 0.0 51.40000000 163.9000000
    BPVAL N-BUT-01 WATER -2.119600000 735.8086000 .3000000000  &
        0.0 0.0 0.0 51.40000000 163.9000000
    BPVAL ACETONE ETHANOL -.3471000000 206.5973000 .3000000000  &
        0.0 0.0 0.0 25.00000000 78.30000000
    BPVAL ETHANOL ACETONE -1.078700000 479.0500000 .3000000000  &
        0.0 0.0 0.0 25.00000000 78.30000000
    BPVAL ACETONE BUTANOL -8.887500000 3077.281000 .3000000000  &
        0.0 0.0 0.0 58.10000000 115.0000000
    BPVAL BUTANOL ACETONE 10.29790000 -3326.538100 .3000000000  &
        0.0 0.0 0.0 58.10000000 115.0000000
    BPVAL ETHANOL BUTANOL 0.0 -85.21880000 .3000000000 0.0 0.0  &
        0.0 70.00000000 110.9500000
    BPVAL BUTANOL ETHANOL 0.0 128.5015000 .3000000000 0.0 0.0  &
        0.0 70.00000000 110.9500000
    BPVAL ACETI-01 N-BUT-01 3.296700000 0.0 .3000000000 0.0  &
        0.0 0.0 358.2000000 358.2000000
    BPVAL N-BUT-01 ACETI-01 -1.734300000 0.0 .3000000000 0.0  &
        0.0 0.0 358.2000000 358.2000000
    BPVAL WATER 1:3:5-01 10.25210000 -66.03660000 .2000000000  &
        0.0 0.0 0.0 20.00000000 40.00000000
    BPVAL 1:3:5-01 WATER -3.726400000 2542.779300 .2000000000  &
        0.0 0.0 0.0 20.00000000 40.00000000

STREAM AIRIN
    SUBSTREAM MIXED TEMP=26. PRES=1.
    MOLE-FLOW O2 3500. / NITROGEN 11600.

STREAM S-CO21
    SUBSTREAM MIXED TEMP=70.7802 PRES=2.
    MASS-FLOW WATER 8.831602 / CO2 288.79362 / H2 0.8705286 /  &
        O2 0. / ACETONE 81.312 / ETHANOL 2.17399723 /  &
        BUTANOL 23.23662 / ACETI-01 0.0985

STREAM S-CO22
    SUBSTREAM MIXED TEMP=73.6615 PRES=2.
    MOLE-FLOW WATER 15.261138 / CO2 86.431239 / H2 0.002997 /  &
        O2 0. / ACETONE 185.01384 / ETHANOL 7.412663 /  &
        BUTANOL 6.765303 / ACETI-01 0.00214469 / N-BUT-01 0.

STREAM S-CO23
    SUBSTREAM MIXED TEMP=72.3818 PRES=2.
    MASS-FLOW WATER 3.605802 / CO2 14.950197 / ACETONE  &
        96.06432 / ETHANOL 0.28594267 / 1:3:5-01 0.0060095

STREAM S129
    SUBSTREAM MIXED TEMP=37. PRES=1.01
    MASS-FLOW WATER 260. / CO2 14623.6832 / H2 276.1512 /  &
        ACETONE 287.844 / ETHANOL 5.6332 / BUTANOL 104.477066 / &
        ACETI-01 0.7118389 / N-BUT-01 0.67531

BLOCK B1 MIXER
    PARAM PRES=1.

BLOCK THERMOX RSTOIC
    PARAM TEMP=37. PRES=1.01 HEAT-OF-REAC=YES COMBUSTION=YES  &
```

```
        PROD-NOX=NO

EO-CONV-OPTI

STREAM-REPOR MOLEFLOW
;
;
;
;
;
```

```
 BLOCK:  B1       MODEL: MIXER
 ------------------------------
   INLET STREAMS:          S129        S-CO23      S-CO22      S-CO21
   OUTLET STREAM:          S-VAPOR
   PROPERTY OPTION SET:    NRTL      RENON (NRTL) / IDEAL GAS

                       ***  MASS AND ENERGY BALANCE  ***
                                    IN               OUT        RELATIVE DIFF.
    TOTAL BALANCE
       MOLE(KMOL/HR )            802.546          802.546          0.00000
       MASS(KG/HR   )            31746.9          31746.9          0.00000
       ENTHALPY(CAL/SEC )      -0.145564E+08    -0.145564E+08    0.255922E-15

                       ***  CO2 EQUIVALENT SUMMARY ***
    FEED STREAMS CO2E             18731.2      KG/HR
    PRODUCT STREAMS CO2E          18731.2      KG/HR
    NET STREAMS CO2E PRODUCTION   0.00000      KG/HR
    UTILITIES CO2E PRODUCTION     0.00000      KG/HR
    TOTAL CO2E PRODUCTION         0.00000      KG/HR

                           ***  INPUT DATA  ***
   TWO    PHASE      FLASH
   MAXIMUM NO. ITERATIONS                                    30
   CONVERGENCE TOLERANCE                                      0.000100000
   OUTLET PRESSURE   BAR                                     1.00000

 BLOCK:  THERMOX  MODEL: RSTOIC
 ------------------------------
   INLET STREAMS:          AIRIN       S-VAPOR
   OUTLET STREAM:          COMBUST
   PROPERTY OPTION SET:    NRTL      RENON (NRTL) / IDEAL GAS

                       ***  MASS AND ENERGY BALANCE  ***
                              IN           OUT       GENERATION   RELATIVE DIFF.
   TOTAL BALANCE
   MOLE(KMOL/HR )          15902.5       16051.5       148.908       0.00000
   MASS(KG/HR   )          468699.       468699.                    0.124190E-15
   ENTHALPY(CAL/SEC )   -0.145271E+08 -0.401616E+08                  0.638283

                       ***  CO2 EQUIVALENT SUMMARY ***
    FEED STREAMS CO2E             18731.2      KG/HR
    PRODUCT STREAMS CO2E          46381.0      KG/HR
    NET STREAMS CO2E PRODUCTION   27649.8      KG/HR
    UTILITIES CO2E PRODUCTION     0.00000      KG/HR
    TOTAL CO2E PRODUCTION         27649.8      KG/HR

                           ***  INPUT DATA  ***


   TWO    PHASE  TP  FLASH
   SPECIFIED TEMPERATURE C                                   37.0000
   SPECIFIED PRESSURE    BAR                                  1.01000
   MAXIMUM NO. ITERATIONS                                    30
   CONVERGENCE TOLERANCE                                      0.000100000
   SIMULTANEOUS REACTIONS
   GENERATE COMBUSTION REACTIONS FOR FEED SPECIES          YES
   COMBUSTION PRODUCT FOR CHEMICALLY BOUND NITROGEN        NO

                             ***  RESULTS  ***
   OUTLET TEMPERATURE    C                                      37.000
```

OUTLET PRESSURE	BAR	1.0100
HEAT DUTY	CAL/SEC	-0.25634E+08
VAPOR FRACTION		1.0000

COMBUSTION REACTIONS:

RXN NO	STOICHIOMETRY
C1	H2 + 0.5 O2 --> WATER
C2	4 O2 + ACETONE --> 3 WATER + 3 CO2
C3	3 O2 + ETHANOL --> 3 WATER + 2 CO2
C4	6 O2 + BUTANOL --> 5 WATER + 4 CO2
C5	2 O2 + ACETI-01 --> 2 WATER + 2 CO2
C6	5 O2 + N-BUT-01 --> 4 WATER + 4 CO2
C7	0.5 O2 + CO --> CO2
C8	12 O2 + 1:3:5-01 --> 6 WATER + 9 CO2

HEAT OF REACTIONS:

REACTION NUMBER	REFERENCE COMPONENT	HEAT OF REACTION CAL/MOL
C1	H2	-57757.
C2	ACETONE	-0.40372E+06
C3	ETHANOL	-0.30513E+06
C4	BUTANOL	-0.59903E+06
C5	ACETI-01	-0.20012E+06
C6	N-BUT-01	-0.49334E+06
C7	CO	-67589.
C8	1:3:5-01	-0.11886E+07

REACTION EXTENTS:

REACTION NUMBER	REACTION EXTENT KMOL/HR
C1	137.42
C2	193.02
C3	7.5883
C4	8.4883
C5	0.15639E-01
C6	0.76647E-02
C8	0.49998E-04

V-L PHASE EQUILIBRIUM :

COMP	F(I)	X(I)	Y(I)	K(I)
WATER	0.50596E-01	0.99798	0.50596E-01	0.62215E-01
CO2	0.65656E-01	0.96746E-03	0.65656E-01	83.280
O2	0.16107	0.22576E-03	0.16107	875.51
NITROGEN	0.72268	0.82487E-03	0.72268	1075.1

AIRIN COMBUST S-CO21 S-CO22 S-CO23

STREAM ID	AIRIN	COMBUST	S-CO21	S-CO22	S-CO23
FROM :	----	THERMOX	----	----	----
TO :	THERMOX	----	B1	B1	B1
SUBSTREAM: MIXED					
PHASE:	VAPOR	VAPOR	VAPOR	VAPOR	VAPOR
COMPONENTS: KMOL/HR					
WATER	0.0	812.1467	0.4902	15.2611	0.2002
CO2	0.0	1053.8792	6.5620	86.4312	0.3397
H2	0.0	0.0	0.4318	2.9970-03	0.0
O2	3500.0000	2585.4283	0.0	0.0	0.0
ACETONE	0.0	0.0	1.4000	185.0138	1.6540

ETHANOL	0.0	0.0	4.7190-02	7.4127	6.2068-03
BUTANOL	0.0	0.0	0.3135	6.7653	0.0
ACETI-01	0.0	0.0	1.6402-03	2.1447-03	0.0
N-BUT-01	0.0	0.0	0.0	0.0	0.0
NITROGEN	1.1600+04	1.1600+04	0.0	0.0	0.0
CO	0.0	0.0	0.0	0.0	0.0
NO	0.0	0.0	0.0	0.0	0.0
1:3:5-01	0.0	0.0	0.0	0.0	4.9998-05
TOTAL FLOW:					
KMOL/HR	1.5100+04	1.6051+04	9.2464	300.8893	2.2001
KG/HR	4.3695+05	4.6870+05	405.3169	1.5667+04	114.9123
L/MIN	6.2595+06	6.8303+06	2203.3806	7.2301+04	526.7182
STATE VARIABLES:					
TEMP C	26.0000	37.0000	70.7802	73.6615	72.3818
PRES BAR	1.0000	1.0100	2.0000	2.0000	2.0000
VFRAC	1.0000	1.0000	1.0000	1.0000	1.0000
LFRAC	0.0	0.0	0.0	0.0	0.0
SFRAC	0.0	0.0	0.0	0.0	0.0
ENTHALPY:					
CAL/MOL	6.9690	-9007.3962	-7.9589+04	-6.3706+04	-5.7883+04
CAL/GM	0.2408	-308.4747	-1815.6374	-1223.4645	-1108.2314
CAL/SEC	2.9231+04	-4.0162+07	-2.0442+05	-5.3246+06	-3.5375+04
ENTROPY:					
CAL/MOL-K	1.1247	1.5020	-9.3826	-32.6617	-37.2808
CAL/GM-K	3.8866-02	5.1439-02	-0.2140	-0.6273	-0.7138
DENSITY:					
MOL/CC	4.0205-05	3.9167-05	6.9941-05	6.9360-05	6.9617-05
GM/CC	1.1634-03	1.1437-03	3.0659-03	3.6116-03	3.6361-03
AVG MW	28.9372	29.1998	43.8350	52.0705	52.2302

S-VAPOR S129

STREAM ID	S-VAPOR	S129
FROM :	B1	----
TO :	THERMOX	B1
SUBSTREAM: MIXED		
PHASE:	VAPOR	VAPOR
COMPONENTS: KMOL/HR		
WATER	30.3837	14.4322
CO2	425.6154	332.2824
H2	137.4227	136.9879
O2	0.0	0.0
ACETONE	193.0238	4.9560
ETHANOL	7.5883	0.1223
BUTANOL	8.4883	1.4095
ACETI-01	1.5639-02	1.1854-02
N-BUT-01	7.6647-03	7.6647-03
NITROGEN	0.0	0.0
CO	0.0	0.0
NO	0.0	0.0
1:3:5-01	4.9998-05	0.0
TOTAL FLOW:		
KMOL/HR	802.5457	490.2098
KG/HR	3.1747+04	1.5559+04
L/MIN	3.6694+05	2.0860+05
STATE VARIABLES:		
TEMP C	56.8012	37.0000
PRES BAR	1.0000	1.0100
VFRAC	1.0000	1.0000
LFRAC	0.0	0.0
SFRAC	0.0	0.0
ENTHALPY:		
CAL/MOL	-6.5296+04	-6.6035+04
CAL/GM	-1650.6493	-2080.5151
CAL/SEC	-1.4556+07	-8.9920+06
ENTROPY:		
CAL/MOL-K	-10.4718	1.2399
CAL/GM-K	-0.2647	3.9066-02
DENSITY:		
MOL/CC	3.6452-05	3.9167-05

GM/CC	1.4420-03	1.2432-03
AVG MW	39.5577	31.7398

Separation Flowsheet

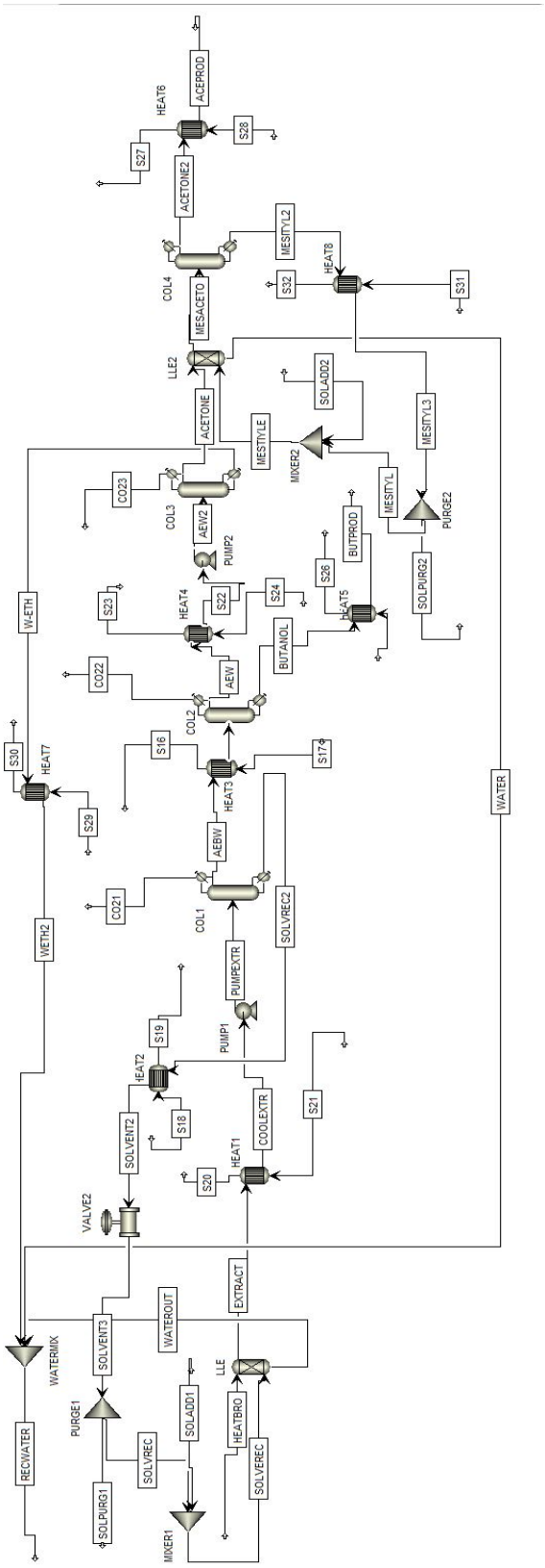

Figure B3. Separation Process Flowsheet

Separation Input Summary

```
;
;Input Summary created by Aspen Plus Rel. 34.0 at 14:04:28 Mon Apr 11, 2016
;Directory S:\Final Separation_4  Filename
C:\Users\aldias\AppData\Local\Temp\~ap4ea3.txt
;


DYNAMICS
    DYNAMICS RESULTS=ON

IN-UNITS MET PRESSURE=bar TEMPERATURE=C DELTA-T=C PDROP=bar  &
        INVERSE-PRES='1/bar'

DEF-STREAMS CONVEN ALL

MODEL-OPTION

DATABANKS 'APV88 PURE32' / 'APV88 AQUEOUS' / 'APV88 SOLIDS' /  &
        'APV88 INORGANIC' / 'APEOSV88 AP-EOS' / NOASPENPCD

PROP-SOURCES 'APV88 PURE32' / 'APV88 AQUEOUS' / 'APV88 SOLIDS' &
         / 'APV88 INORGANIC' / 'APEOSV88 AP-EOS'

COMPONENTS
    BUTANOL C4H10O-1 /
    ACETONE C3H6O-1 /
    ETHANOL C2H6O-2 /
    WATER H2O /
    CO2 CO2 /
    N-BUT-01 C4H8O2-1 /
    ACETI-01 C2H4O2-1 /
    1:3:5-01 C9H12-8 /
    HYDROGEN H2

SOLVE
    RUN-MODE MODE=SIM

FLOWSHEET
    BLOCK LLE IN=HEATBRO2 SOLVEREC OUT=EXTRACT WATEROUT
    BLOCK COL1 IN=PUMPEXTR OUT=CO21 AEBW SOLVREC2
    BLOCK PUMP1 IN=COOLEXTR OUT=PUMPEXTR
    BLOCK COL2 IN=S-AEBW2 OUT=CO22 S-AEW BUTANOL
    BLOCK COL3 IN=S-AEW2 OUT=CO23 ACETONE W-ETH
    BLOCK LLE2 IN=ACETONE MESITYLE OUT=MESACETO WATER
    BLOCK COL4 IN=MESACETO OUT=ACETONE2 MESITYL2
    BLOCK WATERMIX IN=WATEROUT WATER W-ETH2 OUT=RECWATER
    BLOCK PUMP2 IN=S22 OUT=S-AEW2
    BLOCK HEAT2 IN=SOLVREC2 S18 OUT=SOLVENT2 S19
    BLOCK HEAT4 IN=S-AEW S24 OUT=S22 S23
    BLOCK HEAT1 IN=EXTRACT S21 OUT=COOLEXTR S20
    BLOCK HEAT3 IN=AEBW S17 OUT=S-AEBW2 S16
    BLOCK HEAT5 IN=BUTANOL S25 OUT=BUTPROD S26
    BLOCK HEAT6 IN=ACETONE2 S28 OUT=ACEPROD S27
    BLOCK HEAT7 IN=W-ETH S29 OUT=W-ETH2 S30
    BLOCK HEAT8 IN=MESITYL2 S31 OUT=MESITYL3 S32
    BLOCK PURGE2 IN=MESITYL3 OUT=SOLPURG2 MESITYL
    BLOCK PURGE1 IN=SOLVENT3 OUT=SOLPURG1 SOLVREC
    BLOCK MIXER1 IN=SOLVREC SOLADD1 OUT=SOLVEREC
    BLOCK MIXER2 IN=MESITYL SOLADD2 OUT=MESTIYLE
    BLOCK VALVE2 IN=SOLVENT2 OUT=SOLVENT3

PROPERTIES NRTL

PROP-DATA NRTL-1
    IN-UNITS MET PRESSURE=bar TEMPERATURE=C DELTA-T=C PDROP=bar  &
```

```
        INVERSE-PRES='1/bar'
    PROP-LIST NRTL
    BPVAL BUTANOL ACETONE 10.29790000 -3326.538100 .3000000000  &
        0.0 0.0 0.0 58.10000000 115.0000000
    BPVAL ACETONE BUTANOL -8.887500000 3077.281000 .3000000000  &
        0.0 0.0 0.0 58.10000000 115.0000000
    BPVAL BUTANOL ETHANOL 0.0 128.5015000 .3000000000 0.0 0.0  &
        0.0 70.00000000 110.9500000
    BPVAL ETHANOL BUTANOL 0.0 -85.21880000 .3000000000 0.0 0.0  &
        0.0 70.00000000 110.9500000
    BPVAL BUTANOL WATER -2.040500000 763.8692000 .3000000000  &
        0.0 0.0 0.0 19.17000000 117.6000000
    BPVAL WATER BUTANOL 13.11020000 -3338.953600 .3000000000  &
        0.0 0.0 0.0 19.17000000 117.6000000
    BPVAL ACETONE ETHANOL -.3471000000 206.5973000 .3000000000  &
        0.0 0.0 0.0 25.00000000 78.30000000
    BPVAL ETHANOL ACETONE -1.078700000 479.0500000 .3000000000  &
        0.0 0.0 0.0 25.00000000 78.30000000
    BPVAL ACETONE WATER 6.398100000 -1808.991000 .3000000000  &
        0.0 0.0 0.0 20.00000000 95.10000000
    BPVAL WATER ACETONE .0544000000 419.9716000 .3000000000 0.0  &
        0.0 0.0 20.00000000 95.10000000
    BPVAL ETHANOL WATER -.8009000000 246.1800000 .3000000000  &
        0.0 0.0 0.0 24.99000000 100.0000000
    BPVAL WATER ETHANOL 3.457800000 -586.0809000 .3000000000  &
        0.0 0.0 0.0 24.99000000 100.0000000
    BPVAL WATER N-BUT-01 2.644200000 90.10910000 .3000000000  &
        0.0 0.0 0.0 51.40000000 163.9000000
    BPVAL N-BUT-01 WATER -2.119600000 735.8086000 .3000000000  &
        0.0 0.0 0.0 51.40000000 163.9000000
    BPVAL WATER 1:3:5-01 10.25210000 -66.03660000 .2000000000  &
        0.0 0.0 0.0 20.00000000 40.00000000
    BPVAL 1:3:5-01 WATER -3.726400000 2542.779300 .2000000000  &
        0.0 0.0 0.0 20.00000000 40.00000000
    BPVAL N-BUT-01 ACETI-01 -1.734300000 0.0 .3000000000 0.0  &
        0.0 0.0 358.2000000 358.2000000
    BPVAL ACETI-01 N-BUT-01 3.296700000 0.0 .3000000000 0.0  &
        0.0 0.0 358.2000000 358.2000000

PSTREAM SOLADD1
    SUBSTREAM MIXED TEMP=25. PRES=1.
    MOLE-FLOW 1:3:5-01 5.

STREAM SOLADD2
    SUBSTREAM MIXED TEMP=25. PRES=1.
    MOLE-FLOW 1:3:5-01 1. ROP-SET PS-1 TEMP KVL GAMMA KVL2 BETA MOLEFRAC  &
        SUBSTREAM=MIXED COMPS=BUTANOL ACETONE PHASE=V L1 L2

STREAM HEATBRO2
    SUBSTREAM MIXED TEMP=78.14 PRES=1.
    MASS-FLOW BUTANOL 9030.21 / ACETONE 1602.36 / ETHANOL  &
        151.87 / WATER 81785.16 / CO2 939.16 / N-BUT-01  &
        252.8 / ACETI-01 104.25 / 1:3:5-01 0. / HYDROGEN  &
        2.11

STREAM MESITYLE
    SUBSTREAM MIXED TEMP=25. PRES=1.
    MOLE-FLOW 1:3:5-01 150.

STREAM S17
    SUBSTREAM MIXED TEMP=12. PRES=1.
    MOLE-FLOW WATER 500.

STREAM S18
    SUBSTREAM MIXED TEMP=12. PRES=1.
    MOLE-FLOW WATER 5100.

STREAM S21
    SUBSTREAM MIXED TEMP=12. PRES=1.
    MOLE-FLOW WATER 2200.

STREAM S24
```

```
    SUBSTREAM MIXED TEMP=12. PRES=1.
    MOLE-FLOW WATER 135.

STREAM S25
    SUBSTREAM MIXED TEMP=12. PRES=1.
    MOLE-FLOW WATER 295.

STREAM S28
    SUBSTREAM MIXED TEMP=12. PRES=1.
    MOLE-FLOW WATER 30.

STREAM S29
    SUBSTREAM MIXED TEMP=12. PRES=1.
    MOLE-FLOW WATER 80.

STREAM S31
    SUBSTREAM MIXED TEMP=12. PRES=1.
    MOLE-FLOW WATER 370.

STREAM SOLADD1
    SUBSTREAM MIXED TEMP=25. PRES=1.
    MOLE-FLOW 1:3:5-01 5.

STREAM SOLADD2
    SUBSTREAM MIXED TEMP=25. PRES=1.
    MOLE-FLOW 1:3:5-01 1. STREAM SOLVENT2
    SUBSTREAM MIXED TEMP=25. PRES=1.
    MASS-FLOW 1:3:5-01 200000.

STREAM SOLVEREC
    SUBSTREAM MIXED TEMP=25. PRES=1.
    MOLE-FLOW 1:3:5-01 1663.93

BLOCK MIXER1 MIXER
    PARAM PRES=1.

BLOCK MIXER2 MIXER
    PARAM PRES=1. BLOCK WATERMIX MIXER
    PARAM

BLOCK PURGE1 FSPLIT
    FRAC SOLVREC 0.99

BLOCK PURGE2 FSPLIT
    FRAC MESITYL 0.99

BLOCK HEAT1 HEATX
    PARAM T-HOT=50. CALC-TYPE=DESIGN MIN-TAPP=10.  &
        U-OPTION=PHASE F-OPTION=CONSTANT CALC-METHOD=SHORTCUT
    FEEDS HOT=EXTRACT COLD=S21
    OUTLETS-HOT COOLEXTR
    OUTLETS-COLD S20
    HOT-SIDE DP-OPTION=CONSTANT DPPARMOPT=NO
    COLD-SIDE DP-OPTION=CONSTANT DPPARMOPT=NO
    TQ-PARAM CURVE=YES

BLOCK HEAT2 HEATX
    PARAM T-HOT=25. CALC-TYPE=DESIGN MIN-TAPP=10.  &
        U-OPTION=PHASE F-OPTION=CONSTANT CALC-METHOD=SHORTCUT
    FEEDS HOT=SOLVREC2 COLD=S18
    OUTLETS-HOT SOLVENT2
    OUTLETS-COLD S19
    HOT-SIDE DP-OPTION=CONSTANT DPPARMOPT=NO
    COLD-SIDE DP-OPTION=CONSTANT DPPARMOPT=NO
    TQ-PARAM CURVE=YES

BLOCK HEAT3 HEATX
    PARAM T-HOT=30. CALC-TYPE=DESIGN MIN-TAPP=10.  &
        U-OPTION=PHASE F-OPTION=CONSTANT CALC-METHOD=SHORTCUT
    FEEDS HOT=AEBW COLD=S17
    OUTLETS-HOT S-AEBW2
    OUTLETS-COLD S16
```

```
    HOT-SIDE DP-OPTION=CONSTANT DPPARMOPT=NO
    COLD-SIDE DP-OPTION=CONSTANT DPPARMOPT=NO
    TQ-PARAM CURVE=YES

BLOCK HEAT4 HEATX
    PARAM T-HOT=30. CALC-TYPE=DESIGN MIN-TAPP=10.  &
        U-OPTION=PHASE F-OPTION=CONSTANT CALC-METHOD=SHORTCUT
    FEEDS HOT=S-AEW COLD=S24
    OUTLETS-HOT S22
    OUTLETS-COLD S23
    HOT-SIDE DP-OPTION=CONSTANT DPPARMOPT=NO
    COLD-SIDE DP-OPTION=CONSTANT DPPARMOPT=NO
    TQ-PARAM CURVE=YES

BLOCK HEAT5 HEATX
    PARAM T-HOT=25. CALC-TYPE=DESIGN MIN-TAPP=10.  &
        U-OPTION=PHASE F-OPTION=CONSTANT CALC-METHOD=SHORTCUT
    FEEDS HOT=BUTANOL COLD=S25
    OUTLETS-HOT BUTPROD
    OUTLETS-COLD S26
    HOT-SIDE DP-OPTION=CONSTANT DPPARMOPT=NO
    COLD-SIDE DP-OPTION=CONSTANT DPPARMOPT=NO
    TQ-PARAM CURVE=YES

BLOCK HEAT6 HEATX
    PARAM T-HOT=25. CALC-TYPE=DESIGN MIN-TAPP=10.  &
        U-OPTION=PHASE F-OPTION=CONSTANT CALC-METHOD=SHORTCUT
    FEEDS HOT=ACETONE2 COLD=S28
    OUTLETS-HOT ACEPROD
    OUTLETS-COLD S27
    HOT-SIDE DP-OPTION=CONSTANT DPPARMOPT=NO
    COLD-SIDE DP-OPTION=CONSTANT DPPARMOPT=NO
    TQ-PARAM CURVE=YES

BLOCK HEAT7 HEATX
    PARAM T-HOT=30. CALC-TYPE=DESIGN MIN-TAPP=10.  &
        U-OPTION=PHASE F-OPTION=CONSTANT CALC-METHOD=SHORTCUT
    FEEDS HOT=W-ETH COLD=S29
    OUTLETS-HOT W-ETH2
    OUTLETS-COLD S30
    HOT-SIDE DP-OPTION=CONSTANT DPPARMOPT=NO
    COLD-SIDE DP-OPTION=CONSTANT DPPARMOPT=NO
    TQ-PARAM CURVE=YES

BLOCK HEAT8 HEATX
    PARAM T-HOT=25. CALC-TYPE=DESIGN MIN-TAPP=10.  &
        U-OPTION=PHASE F-OPTION=CONSTANT CALC-METHOD=SHORTCUT
    FEEDS HOT=MESITYL2 COLD=S31
    OUTLETS-HOT MESITYL3
    OUTLETS-COLD S32
    HOT-SIDE DP-OPTION=CONSTANT DPPARMOPT=NO
    COLD-SIDE DP-OPTION=CONSTANT DPPARMOPT=NO
    TQ-PARAM CURVE=YES

BLOCK COL1 RADFRAC
    PARAM NSTAGE=20 ALGORITHM=STANDARD MAXOL=25 DAMPING=NONE
    COL-CONFIG CONDENSER=PARTIAL-V-L
    FEEDS PUMPEXTR 10
    PRODUCTS CO21 1 V / AEBW 1 L / SOLVREC2 20 L
    P-SPEC 1 2.
    COL-SPECS MOLE-RDV=0.05 MOLE-D=185. MOLE-RR=5.

BLOCK COL2 RADFRAC
    PARAM NSTAGE=17 ALGORITHM=STANDARD MAXOL=25 DAMPING=NONE
    COL-CONFIG CONDENSER=PARTIAL-V-L
    FEEDS S-AEBW2 8
    PRODUCTS CO22 1 V / BUTANOL 17 L / S-AEW 1 L
    P-SPEC 1 2.
    COL-SPECS MOLE-RDV=0.1 MOLE-D=62.5 MOLE-RR=2.

BLOCK COL3 RADFRAC
    PARAM NSTAGE=16 ALGORITHM=STANDARD MAXOL=25 DAMPING=NONE
```

```
    COL-CONFIG CONDENSER=PARTIAL-V-L
    FEEDS S-AEW2 8
    PRODUCTS W-ETH 16 L / ACETONE 1 L / CO23 1 V
    P-SPEC 1 2.
    COL-SPECS DP-STAGE=0.15 <psi> MOLE-RDV=0.1 MOLE-D=22.  &
        MOLE-RR=3.

BLOCK COL4 RADFRAC
    PARAM NSTAGE=10 ALGORITHM=STANDARD MAXOL=25 DAMPING=NONE
    COL-CONFIG CONDENSER=TOTAL
    FEEDS MESACETO 5
    PRODUCTS ACETONE2 1 L / MESITYL2 10 L
    P-SPEC 1 1.
    COL-SPECS MOLE-D=18. MOLE-RR=2.

BLOCK LLE EXTRACT
    PARAM NSTAGE=10
    FEEDS HEATBRO2 1 / SOLVEREC 10
    PRODUCTS EXTRACT 1 L2 / WATEROUT 10 L1
    P-SPEC 1 1.
    L1-COMPS WATER
    L2-COMPS 1:3:5-01
    T-EST 1 25.

BLOCK LLE2 EXTRACT
    PARAM NSTAGE=3
    FEEDS ACETONE 1 / MESITYLE 3
    PRODUCTS MESACETO 1 L2 / WATER 3 L1
    P-SPEC 1 1.
    L1-COMPS WATER
    L2-COMPS 1:3:5-01
    T-EST 1 25.

BLOCK PUMP1 PUMP
    PARAM PRES=2.

BLOCK PUMP2 PUMP
    PARAM PRES=2.5

BLOCK VALVE2 VALVE
    PARAM P-OUT=1.

EO-CONV-OPTI

STREAM-REPOR MOLEFLOW MOLEFRAC

PROPERTY-REP PCES

PROP-TABLE BINRY-1 FLASHCURVE
    PROPERTIES NRTL FREE-WATER=STEAM-TA SOLU-WATER=3  &
        TRUE-COMPS=YES
    MOLE-FLOW BUTANOL 1 /  ACETONE  1
    STATE VFRAC=0.0
    VARY PRES
    RANGE LIST=1.013250000
    VARY MOLEFRAC COMP=BUTANOL
    RANGE LOWER=0.0 UPPER=1.0 NPOINT= 51
    PARAM NPHASE=3
    TABULATE PROPERTIES=PS-1
;
;
;
;
;
```

Separation Stream Reports

ACEPROD ACETONE ACETONE2 AEBW BUTANOL

STREAM ID	ACEPROD	ACETONE	ACETONE2	AEBW	BUTANOL
FROM :	HEAT6	COL3	COL4	COL1	COL2
TO :	----	LLE2	HEAT6	HEAT3	HEAT5
SUBSTREAM: MIXED					
PHASE:	LIQUID	LIQUID	LIQUID	LIQUID	LIQUID
COMPONENTS: KMOL/HR					
BUTANOL	7.6869-10	6.5495-06	7.6869-10	119.3661	112.6512
ACETONE	16.7770	17.3011	16.7770	26.1880	8.3632-05
ETHANOL	6.6485-02	0.1008	6.6485-02	3.2470	1.0149-04
WATER	1.1085	2.3501	1.1085	23.9916	2.6025-04
CO2	4.7984-02	4.7984-02	4.7984-02	2.3516	2.1602-22
N-BUT-01	0.0	3.1105-26	0.0	6.5939-07	6.5939-07
ACETI-01	7.9400-15	1.8439-10	7.9400-15	0.6033	0.5974
1:3:5-01	3.7074-05	1.1985-18	3.7074-05	9.7623-04	9.7622-04
HYDROGEN	5.5615-09	5.5615-09	5.5615-09	1.5340-03	0.0
COMPONENTS: MOLE FRAC					
BUTANOL	4.2705-11	3.3078-07	4.2705-11	0.6792	0.9947
ACETONE	0.9321	0.8738	0.9321	0.1490	7.3848-07
ETHANOL	3.6936-03	5.0916-03	3.6936-03	1.8475-02	8.9618-07
WATER	6.1583-02	0.1187	6.1583-02	0.1365	2.2980-06
CO2	2.6658-03	2.4234-03	2.6658-03	1.3380-02	1.9075-24
N-BUT-01	0.0	1.5710-27	0.0	3.7519-09	5.8224-09
ACETI-01	4.4111-16	9.3126-12	4.4111-16	3.4328-03	5.2753-03
1:3:5-01	2.0597-06	6.0530-20	2.0597-06	5.5546-06	8.6200-06
HYDROGEN	3.0897-10	2.8088-10	3.0897-10	8.7283-06	0.0
TOTAL FLOW:					
KMOL/HR	18.0000	19.8000	18.0000	175.7500	113.2500
KG/HR	999.5579	1053.9421	999.5579	1.1090+04	8386.0274
L/MIN	21.0406	23.8150	21.8042	236.8323	203.1231
STATE VARIABLES:					
TEMP C	25.0000	71.4842	48.0568	63.2519	138.3978
PRES BAR	1.0000	2.0000	1.0000	2.0000	2.0000
VFRAC	0.0	0.0	0.0	0.0	0.0
LFRAC	1.0000	1.0000	1.0000	1.0000	1.0000
SFRAC	0.0	0.0	0.0	0.0	0.0
ENTHALPY:					
CAL/MOL	-5.9840+04	-5.9111+04	-5.9160+04	-7.2578+04	-7.2171+04
CAL/GM	-1077.6036	-1110.4988	-1065.3474	-1150.1548	-974.6438
CAL/SEC	-2.9920+05	-3.2511+05	-2.9580+05	-3.5432+06	-2.2704+06
ENTROPY:					
CAL/MOL-K	-72.1030	-66.1757	-69.9473	-101.9336	-114.5601
CAL/GM-K	-1.2984	-1.2432	-1.2596	-1.6153	-1.5471
DENSITY:					
MOL/CC	1.4258-02	1.3857-02	1.3759-02	1.2368-02	9.2924-03
GM/CC	0.7918	0.7376	0.7640	0.7805	0.6881
AVG MW	55.5310	53.2294	55.5310	63.1032	74.0488

BUTPROD CO21 CO22 CO23 COOLEXTR

STREAM ID	BUTPROD	CO21	CO22	CO23	COOLEXTR
FROM :	HEAT5	COL1	COL2	COL3	HEAT1
TO :	----	----	----	----	PUMP1
SUBSTREAM: MIXED					
PHASE:	LIQUID	VAPOR	VAPOR	VAPOR	MIXED
COMPONENTS: KMOL/HR					
BUTANOL	112.6512	0.3135	9.1275-02	8.5688-08	121.8277
ACETONE	8.3632-05	1.4000	3.1855	1.6540	27.5879
ETHANOL	1.0149-04	4.7189-02	0.1609	6.2067-03	3.2942
WATER	2.6025-04	0.4901	0.8469	0.2001	24.4817
CO2	2.1602-22	6.5620	1.9639	0.3397	8.9135
N-BUT-01	6.5939-07	2.5234-10	3.3002-16	3.9744-29	2.8693
ACETI-01	0.5974	1.6418-03	3.5715-05	1.5507-12	0.7264
1:3:5-01	9.7622-04	8.9348-07	6.9911-11	3.6708-21	1663.8901
HYDROGEN	0.0	0.4357	1.5305-03	3.4622-06	0.4372
COMPONENTS: MOLE FRAC					
BUTANOL	0.9947	3.3890-02	1.4604-02	3.8949-08	6.5710-02

ACETONE	7.3848-07	0.1513	0.5097	0.7518	1.4880-02
ETHANOL	8.9618-07	5.1015-03	2.5739-02	2.8212-03	1.7768-03
WATER	2.2980-06	5.2984-02	0.1355	9.0962-02	1.3205-02
CO2	1.9075-24	0.7094	0.3142	0.1544	4.8077-03
N-BUT-01	5.8224-09	2.7280-11	5.2803-17	1.8066-29	1.5476-03
ACETI-01	5.2753-03	1.7749-04	5.7145-06	7.0489-13	3.9181-04
1:3:5-01	8.6200-06	9.6593-08	1.1186-11	1.6685-21	0.8974
HYDROGEN	0.0	4.7099-02	2.4489-04	1.5737-06	2.3581-04
TOTAL FLOW:					
KMOL/HR	113.2500	9.2500	6.2500	2.2000	1854.0280
KG/HR	8386.0274	405.3167	300.8838	114.9047	2.1190+05
L/MIN	172.8900	2155.9874	1494.7302	525.3239	4690.9214
STATE VARIABLES:					
TEMP C	25.0000	63.2519	72.0230	71.4842	50.0000
PRES BAR	2.0000	2.0000	2.0000	2.0000	1.0000
VFRAC	0.0	1.0000	1.0000	1.0000	5.8387-04
LFRAC	1.0000	0.0	0.0	0.0	0.9994
SFRAC	0.0	0.0	0.0	0.0	0.0
ENTHALPY:					
CAL/MOL	-7.8654+04	-7.9642+04	-6.5347+04	-5.7899+04	-2.0030+04
CAL/GM	-1062.1978	-1817.5596	-1357.4023	-1108.5504	-175.2474
CAL/SEC	-2.4743+06	-2.0464+05	-1.1345+05	-3.5383+04	-1.0316+07
ENTROPY:					
CAL/MOL-K	-132.6971	-9.6294	-27.3481	-37.3257	-126.1291
CAL/GM-K	-1.7920	-0.2198	-0.5681	-0.7146	-1.1035
DENSITY:					
MOL/CC	1.0917-02	7.1506-05	6.9689-05	6.9798-05	6.5873-03
GM/CC	0.8084	3.1333-03	3.3549-03	3.6455-03	0.7529
AVG MW	74.0488	43.8180	48.1414	52.2294	114.2944

EXTRACT HEATBRO2 MESACETO MESITYL MESITY

STREAM ID	EXTRACT	HEATBRO2	MESACETO	MESITYL	MESITYL2
FROM :	LLE	----	LLE2	PURGE2	COL4
TO :	HEAT1	LLE	COL4	----	HEAT8
SUBSTREAM: MIXED					
PHASE:	LIQUID	MIXED	LIQUID	LIQUID	LIQUID
COMPONENTS: KMOL/HR					
BUTANOL	121.8277	121.8277	6.5495-06	6.4833-06	6.5487-06
ACETONE	27.5879	27.5888	17.3011	0.5188	0.5241
ETHANOL	3.2942	3.2966	0.1008	3.3986-02	3.4329-02
WATER	24.4817	4539.7662	1.1085	3.6766-08	3.7137-08
CO2	8.9135	21.3398	4.7984-02	1.1105-14	1.1217-14
N-BUT-01	2.8693	2.8693	0.0	0.0	0.0
ACETI-01	0.7264	1.7360	1.8439-10	1.8254-10	1.8438-10
1:3:5-01	1663.8901	0.0	150.0000	148.5000	150.0000
HYDROGEN	0.4372	1.0467	5.5615-09	1.1017-31	1.1128-31
COMPONENTS: MOLE FRAC					
BUTANOL	6.5710-02	2.5814-02	3.8856-08	4.3496-08	4.3496-08
ACETONE	1.4880-02	5.8457-03	0.1026	3.4809-03	3.4809-03
ETHANOL	1.7768-03	6.9850-04	5.9810-04	2.2801-04	2.2801-04
WATER	1.3205-02	0.9619	6.5763-03	2.4666-10	2.4666-10
CO2	4.8077-03	4.5216-03	2.8467-04	7.4506-17	7.4506-17
N-BUT-01	1.5476-03	6.0796-04	0.0	0.0	0.0
ACETI-01	3.9181-04	3.6783-04	1.0939-12	1.2247-12	1.2247-12
1:3:5-01	0.8974	0.0	0.8899	0.9963	0.9963
HYDROGEN	2.3581-04	2.2178-04	3.2995-11	7.3914-34	7.3914-34
TOTAL FLOW:					
KMOL/HR	1854.0280	4719.4711	168.5584	149.0528	150.5584
KG/HR	2.1190+05	9.3868+04	1.9061+04	1.7881+04	1.8061+04
L/MIN	4293.8380	1.5455+04	369.2239	345.6042	408.2923
STATE VARIABLES:					
TEMP C	69.3434	78.1400	27.4344	25.0000	162.1895
PRES BAR	1.0000	1.0000	1.0000	1.0000	1.0000
VFRAC	0.0	5.9923-03	0.0	0.0	0.0
LFRAC	1.0000	0.9940	1.0000	1.0000	1.0000
SFRAC	0.0	0.0	0.0	0.0	0.0
ENTHALPY:					
CAL/MOL	-1.9028+04	-6.7663+04	-1.9900+04	-1.5287+04	-7535.0961
CAL/GM	-166.4828	-3401.9274	-175.9785	-127.4350	-62.8128

CAL/SEC	-9.7996+06	-8.8703+07	-9.3174+05	-6.3295+05	-3.1513+05
ENTROPY:					
CAL/MOL-K	-123.1278	-38.3987	-126.0673	-133.7298	-112.6436
CAL/GM-K	-1.0773	-1.9306	-1.1148	-1.1148	-0.9390
DENSITY:					
MOL/CC	7.1965-03	5.0896-03	7.6087-03	7.1880-03	6.1459-03
GM/CC	0.8225	0.1012	0.8604	0.8623	0.7373
AVG MW	114.2944	19.8895	113.0808	119.9612	119.9612

MESITYL3 MESITYLE PUMPEXTR RECWATER S-AE

STREAM ID	MESITYL3	MESITYLE	PUMPEXTR	RECWATER	S-AEBW2
FROM :	HEAT8	----	PUMP1	WATERMIX	HEAT3
TO :	PURGE2	LLE2	COL1	----	COL2
SUBSTREAM: MIXED					
PHASE:	LIQUID	LIQUID	LIQUID	MIXED	LIQUID
COMPONENTS: KMOL/HR					
BUTANOL	6.5487-06	0.0	121.8277	6.6237	119.3661
ACETONE	0.5241	0.0	27.5879	4.0482	26.1880
ETHANOL	3.4329-02	0.0	3.2942	2.9814	3.2470
WATER	3.7137-08	0.0	24.4817	4537.1204	23.9916
CO2	1.1217-14	0.0	8.9135	12.4263	2.3516
N-BUT-01	0.0	0.0	2.8693	1.7693-09	6.5939-07
ACETI-01	1.8438-10	0.0	0.7264	1.0154	0.6033
1:3:5-01	150.0000	150.0000	1663.8901	3.9883-02	9.7623-04
HYDROGEN	1.1128-31	0.0	0.4372	0.6095	1.5340-03
COMPONENTS: MOLE FRAC					
BUTANOL	4.3496-08	0.0	6.5710-02	1.4510-03	0.6792
ACETONE	3.4809-03	0.0	1.4880-02	8.8681-04	0.1490
ETHANOL	2.2801-04	0.0	1.7768-03	6.5312-04	1.8475-02
WATER	2.4666-10	0.0	1.3205-02	0.9939	0.1365
CO2	7.4506-17	0.0	4.8077-03	2.7222-03	1.3380-02
N-BUT-01	0.0	0.0	1.5476-03	3.8760-13	3.7519-09
ACETI-01	1.2247-12	0.0	3.9181-04	2.2244-04	3.4328-03
1:3:5-01	0.9963	1.0000	0.8974	8.7369-06	5.5546-06
HYDROGEN	7.3914-34	0.0	2.3581-04	1.3352-04	8.7283-06
TOTAL FLOW:					
KMOL/HR	150.5584	150.0000	1854.0280	4564.8647	175.7500
KG/HR	1.8061+04	1.8029+04	2.1190+05	8.3215+04	1.1090+04
L/MIN	349.0951	348.4788	4207.7078	1601.3246	226.6618
STATE VARIABLES:					
TEMP C	25.0000	25.0000	50.0998	28.9391	30.0000
PRES BAR	1.0000	1.0000	2.0000	1.0000	2.0000
VFRAC	0.0	0.0	0.0	1.0420-04	0.0
LFRAC	1.0000	1.0000	1.0000	0.9999	1.0000
SFRAC	0.0	0.0	0.0	0.0	0.0
ENTHALPY:					
CAL/MOL	-1.5287+04	-1.5123+04	-2.0026+04	-6.8279+04	-7.4642+04
CAL/GM	-127.4350	-125.8212	-175.2109	-3745.5504	-1182.8505
CAL/SEC	-6.3934+05	-6.3012+05	-1.0313+07	-8.6579+07	-3.6440+06
ENTROPY:					
CAL/MOL-K	-133.7298	-133.9999	-126.1168	-38.8084	-108.3585
CAL/GM-K	-1.1148	-1.1149	-1.1034	-2.1289	-1.7172
DENSITY:					
MOL/CC	7.1880-03	7.1740-03	7.3438-03	4.7511-02	1.2923-02
GM/CC	0.8623	0.8623	0.8394	0.8661	0.8155
AVG MW	119.9612	120.1943	114.2944	18.2294	63.1032

S-AEW S-AEW2 S16 S17 S18

STREAM ID	S-AEW	S-AEW2	S16	S17	S18
FROM :	COL2	PUMP2	HEAT3	----	----
TO :	HEAT4	COL3	----	HEAT3	HEAT2
SUBSTREAM: MIXED					
PHASE:	LIQUID	LIQUID	LIQUID	LIQUID	LIQUID
COMPONENTS: KMOL/HR					
BUTANOL	6.6237	6.6237	0.0	0.0	0.0
ACETONE	23.0024	23.0024	0.0	0.0	0.0

ETHANOL	3.0860	3.0860	0.0	0.0	0.0
WATER	23.1445	23.1445	500.0000	500.0000	5100.0000
CO2	0.3876	0.3876	0.0	0.0	0.0
N-BUT-01	2.1345-13	2.1345-13	0.0	0.0	0.0
ACETI-01	5.8582-03	5.8582-03	0.0	0.0	0.0
1:3:5-01	9.0333-09	9.0333-09	0.0	0.0	0.0
HYDROGEN	3.4677-06	3.4677-06	0.0	0.0	0.0
COMPONENTS: MOLE FRAC					
BUTANOL	0.1178	0.1178	0.0	0.0	0.0
ACETONE	0.4089	0.4089	0.0	0.0	0.0
ETHANOL	5.4862-02	5.4862-02	0.0	0.0	0.0
WATER	0.4115	0.4115	1.0000	1.0000	1.0000
CO2	6.8914-03	6.8914-03	0.0	0.0	0.0
N-BUT-01	3.7948-15	3.7948-15	0.0	0.0	0.0
ACETI-01	1.0415-04	1.0415-04	0.0	0.0	0.0
1:3:5-01	1.6059-10	1.6059-10	0.0	0.0	0.0
HYDROGEN	6.1648-08	6.1648-08	0.0	0.0	0.0
TOTAL FLOW:					
KMOL/HR	56.2500	56.2500	500.0000	500.0000	5100.0000
KG/HR	2403.4784	2403.4784	9007.6400	9007.6400	9.1878+04
L/MIN	51.8609	48.6858	155.2635	149.1710	1521.5442
STATE VARIABLES:					
TEMP C	72.0230	30.0386	52.6003	12.0000	12.0000
PRES BAR	2.0000	2.5000	1.0000	1.0000	1.0000
VFRAC	0.0	0.0	0.0	0.0	0.0
LFRAC	1.0000	1.0000	1.0000	1.0000	1.0000
SFRAC	0.0	0.0	0.0	0.0	0.0
ENTHALPY:					
CAL/MOL	-6.4426+04	-6.6454+04	-6.7766+04	-6.8491+04	-6.8491+04
CAL/GM	-1507.8078	-1555.2706	-3761.5950	-3801.8505	-3801.8505
CAL/SEC	-1.0067+06	-1.0383+06	-9.4120+06	-9.5127+06	-9.7029+07
ENTROPY:					
CAL/MOL-K	-61.2820	-67.4970	-37.3810	-39.7471	-39.7471
CAL/GM-K	-1.4342	-1.5797	-2.0750	-2.2063	-2.2063
DENSITY:					
MOL/CC	1.8077-02	1.9256-02	5.3672-02	5.5864-02	5.5864-02
GM/CC	0.7724	0.8228	0.9669	1.0064	1.0064
AVG MW	42.7285	42.7285	18.0153	18.0153	18.0153

S19 S20 S21 S22 S23

STREAM ID	S19	S20	S21	S22	S23
FROM :	HEAT2	HEAT1	----	HEAT4	HEAT4
TO :	----	----	HEAT1	PUMP2	----
SUBSTREAM: MIXED					
PHASE:	MIXED	LIQUID	LIQUID	LIQUID	LIQUID
COMPONENTS: KMOL/HR					
BUTANOL	0.0	0.0	0.0	6.6237	0.0
ACETONE	0.0	0.0	0.0	23.0024	0.0
ETHANOL	0.0	0.0	0.0	3.0860	0.0
WATER	5100.0000	2200.0000	2200.0000	23.1445	135.0000
CO2	0.0	0.0	0.0	0.3876	0.0
N-BUT-01	0.0	0.0	0.0	2.1345-13	0.0
ACETI-01	0.0	0.0	0.0	5.8582-03	0.0
1:3:5-01	0.0	0.0	0.0	9.0333-09	0.0
HYDROGEN	0.0	0.0	0.0	3.4677-06	0.0
COMPONENTS: MOLE FRAC					
BUTANOL	0.0	0.0	0.0	0.1178	0.0
ACETONE	0.0	0.0	0.0	0.4089	0.0
ETHANOL	0.0	0.0	0.0	5.4862-02	0.0
WATER	1.0000	1.0000	1.0000	0.4115	1.0000
CO2	0.0	0.0	0.0	6.8914-03	0.0
N-BUT-01	0.0	0.0	0.0	3.7948-15	0.0
ACETI-01	0.0	0.0	0.0	1.0415-04	0.0
1:3:5-01	0.0	0.0	0.0	1.6059-10	0.0
HYDROGEN	0.0	0.0	0.0	6.1648-08	0.0
TOTAL FLOW:					
KMOL/HR	5100.0000	2200.0000	2200.0000	56.2500	135.0000
KG/HR	9.1878+04	3.9634+04	3.9634+04	2403.4784	2432.0628
L/MIN	4.3671+05	687.7755	656.3524	48.6832	42.2084

STATE VARIABLES:					
TEMP C	99.6491	59.0955	12.0000	30.0000	59.1863
PRES BAR	1.0000	1.0000	1.0000	2.0000	1.0000
VFRAC	0.1652	0.0	0.0	0.0	0.0
LFRAC	0.8348	1.0000	1.0000	1.0000	1.0000
SFRAC	0.0	0.0	0.0	0.0	0.0
ENTHALPY:					
CAL/MOL	-6.5272+04	-6.7647+04	-6.8491+04	-6.6456+04	-6.7646+04
CAL/GM	-3623.1391	-3754.9898	-3801.8505	-1555.3197	-3754.8970
CAL/SEC	-9.2468+07	-4.1340+07	-4.1856+07	-1.0384+06	-2.5367+06
ENTROPY:					
CAL/MOL-K	-30.5557	-37.0214	-39.7471	-67.5039	-37.0164
CAL/GM-K	-1.6961	-2.0550	-2.2063	-1.5798	-2.0547
DENSITY:					
MOL/CC	1.9464-04	5.3312-02	5.5864-02	1.9257-02	5.3307-02
GM/CC	3.5064-03	0.9604	1.0064	0.8228	0.9603
AVG MW	18.0153	18.0153	18.0153	42.7285	18.0153

S24 S25 S26 S27 S28

STREAM ID	S24	S25	S26	S27	S28
FROM :	----	----	HEAT5	HEAT6	----
TO :	HEAT4	HEAT5	----	----	HEAT6
SUBSTREAM: MIXED					
PHASE:	LIQUID	LIQUID	MIXED	LIQUID	LIQUID
COMPONENTS: KMOL/HR					
BUTANOL	0.0	0.0	0.0	0.0	0.0
ACETONE	0.0	0.0	0.0	0.0	0.0
ETHANOL	0.0	0.0	0.0	0.0	0.0
WATER	135.0000	295.0000	295.0000	30.0000	30.0000
CO2	0.0	0.0	0.0	0.0	0.0
N-BUT-01	0.0	0.0	0.0	0.0	0.0
ACETI-01	0.0	0.0	0.0	0.0	0.0
1:3:5-01	0.0	0.0	0.0	0.0	0.0
HYDROGEN	0.0	0.0	0.0	0.0	0.0
COMPONENTS: MOLE FRAC					
BUTANOL	0.0	0.0	0.0	0.0	0.0
ACETONE	0.0	0.0	0.0	0.0	0.0
ETHANOL	0.0	0.0	0.0	0.0	0.0
WATER	1.0000	1.0000	1.0000	1.0000	1.0000
CO2	0.0	0.0	0.0	0.0	0.0
N-BUT-01	0.0	0.0	0.0	0.0	0.0
ACETI-01	0.0	0.0	0.0	0.0	0.0
1:3:5-01	0.0	0.0	0.0	0.0	0.0
HYDROGEN	0.0	0.0	0.0	0.0	0.0
TOTAL FLOW:					
KMOL/HR	135.0000	295.0000	295.0000	30.0000	30.0000
KG/HR	2432.0628	5314.5076	5314.5076	540.4584	540.4584
L/MIN	40.2762	88.0109	1.3817+04	9.1522	8.9503
STATE VARIABLES:					
TEMP C	12.0000	12.0000	99.6491	35.0599	12.0000
PRES BAR	1.0000	1.0000	1.0000	1.0000	1.0000
VFRAC	0.0	0.0	9.0091-02	0.0	0.0
LFRAC	1.0000	1.0000	0.9099	1.0000	1.0000
SFRAC	0.0	0.0	0.0	0.0	0.0
ENTHALPY:					
CAL/MOL	-6.8491+04	-6.8491+04	-6.6002+04	-6.8083+04	-6.8491+04
CAL/GM	-3801.8505	-3801.8505	-3663.6947	-3779.1831	-3801.8505
CAL/SEC	-2.5684+06	-5.6125+06	-5.4085+06	-5.6736+05	-5.7076+05
ENTROPY:					
CAL/MOL-K	-39.7471	-39.7471	-32.5155	-38.3766	-39.7471
CAL/GM-K	-2.2063	-2.2063	-1.8049	-2.1302	-2.2063
DENSITY:					
MOL/CC	5.5864-02	5.5864-02	3.5583-04	5.4631-02	5.5864-02
GM/CC	1.0064	1.0064	6.4105-03	0.9842	1.0064
AVG MW	18.0153	18.0153	18.0153	18.0153	18.0153

S29 S30 S31 S32 SOLPURG1

STREAM ID	S29	S30	S31	S32	SOLPURG1
FROM :	----	HEAT7	----	HEAT8	PURGE1
TO :	HEAT7	----	HEAT8	----	----
SUBSTREAM: MIXED					
PHASE:	LIQUID	LIQUID	LIQUID	MIXED	LIQUID
COMPONENTS: KMOL/HR					
BUTANOL	0.0	0.0	0.0	0.0	2.1481-02
ACETONE	0.0	0.0	0.0	0.0	4.3402-08
ETHANOL	0.0	0.0	0.0	0.0	2.0072-10
WATER	80.0000	80.0000	370.0000	370.0000	1.5451-18
CO2	0.0	0.0	0.0	0.0	2.6411-27
N-BUT-01	0.0	0.0	0.0	0.0	2.8693-02
ACETI-01	0.0	0.0	0.0	0.0	1.2146-03
1:3:5-01	0.0	0.0	0.0	0.0	16.6389
HYDROGEN	0.0	0.0	0.0	0.0	0.0
COMPONENTS: MOLE FRAC					
BUTANOL	0.0	0.0	0.0	0.0	1.2871-03
ACETONE	0.0	0.0	0.0	0.0	2.6004-09
ETHANOL	0.0	0.0	0.0	0.0	1.2026-11
WATER	1.0000	1.0000	1.0000	1.0000	9.2575-20
CO2	0.0	0.0	0.0	0.0	1.5824-28
N-BUT-01	0.0	0.0	0.0	0.0	1.7191-03
ACETI-01	0.0	0.0	0.0	0.0	7.2774-05
1:3:5-01	0.0	0.0	0.0	0.0	0.9969
HYDROGEN	0.0	0.0	0.0	0.0	0.0
TOTAL FLOW:					
KMOL/HR	80.0000	80.0000	370.0000	370.0000	16.6903
KG/HR	1441.2224	1441.2224	6665.6536	6665.6536	2004.0928
L/MIN	23.8674	25.6982	110.3865	3.0405+04	38.7304
STATE VARIABLES:					
TEMP C	12.0000	84.3267	12.0000	99.6491	25.0000
PRES BAR	1.0000	1.0000	1.0000	1.0000	1.0000
VFRAC	0.0	0.0	0.0	0.1585	0.0
LFRAC	1.0000	1.0000	1.0000	0.8415	1.0000
SFRAC	0.0	0.0	0.0	0.0	0.0
ENTHALPY:					
CAL/MOL	-6.8491+04	-6.7175+04	-6.8491+04	-6.5337+04	-1.5397+04
CAL/GM	-3801.8505	-3728.7637	-3801.8505	-3626.7511	-128.2298
CAL/SEC	-1.5220+06	-1.4928+06	-7.0394+06	-6.7152+06	-7.1385+04
ENTROPY:					
CAL/MOL-K	-39.7471	-35.6637	-39.7471	-30.7302	-133.9089
CAL/GM-K	-2.2063	-1.9796	-2.2063	-1.7058	-1.1152
DENSITY:					
MOL/CC	5.5864-02	5.1884-02	5.5864-02	2.0282-04	7.1822-03
GM/CC	1.0064	0.9347	1.0064	3.6538-03	0.8624
AVG MW	18.0153	18.0153	18.0153	18.0153	120.0754

SOLPURG2 SOLVENT2 SOLVENT3 SOLVEREC SOLV

STREAM ID	SOLPURG2	SOLVENT2	SOLVENT3	SOLVEREC	SOLVREC
FROM :	PURGE2	HEAT2	VALVE2	----	PURGE1
TO :	----	VALVE2	PURGE1	LLE	----
SUBSTREAM: MIXED					
PHASE:	LIQUID	LIQUID	LIQUID	LIQUID	LIQUID
COMPONENTS: KMOL/HR					
BUTANOL	6.5487-08	2.1481	2.1481	0.0	2.1267
ACETONE	5.2408-03	4.3402-06	4.3402-06	0.0	4.2968-06
ETHANOL	3.4329-04	2.0072-08	2.0072-08	0.0	1.9871-08
WATER	3.7137-10	1.5451-16	1.5451-16	0.0	1.5296-16
CO2	1.1217-16	2.6411-25	2.6411-25	0.0	2.6147-25
N-BUT-01	0.0	2.8693	2.8693	0.0	2.8406
ACETI-01	1.8438-12	0.1215	0.1215	0.0	0.1202
1:3:5-01	1.5000	1663.8891	1663.8891	1663.9300	1647.2503
HYDROGEN	1.1128-33	0.0	0.0	0.0	0.0
COMPONENTS: MOLE FRAC					
BUTANOL	4.3496-08	1.2871-03	1.2871-03	0.0	1.2871-03
ACETONE	3.4809-03	2.6004-09	2.6004-09	0.0	2.6004-09
ETHANOL	2.2801-04	1.2026-11	1.2026-11	0.0	1.2026-11
WATER	2.4666-10	9.2575-20	9.2575-20	0.0	9.2575-20

CO2	7.4506-17	1.5824-28	1.5824-28	0.0	1.5824-28
N-BUT-01	0.0	1.7191-03	1.7191-03	0.0	1.7191-03
ACETI-01	1.2247-12	7.2774-05	7.2774-05	0.0	7.2774-05
1:3:5-01	0.9963	0.9969	0.9969	1.0000	0.9969
HYDROGEN	7.3914-34	0.0	0.0	0.0	0.0
TOTAL FLOW:					
KMOL/HR	1.5056	1669.0280	1669.0280	1663.9300	1652.3377
KG/HR	180.6116	2.0041+05	2.0041+05	1.9999+05	1.9841+05
L/MIN	3.4910	3873.0393	3873.0393	3865.6289	3834.3089
STATE VARIABLES:					
TEMP C	25.0000	25.0000	25.0000	25.0000	25.0000
PRES BAR	1.0000	2.0000	1.0000	1.0000	1.0000
VFRAC	0.0	0.0	0.0	0.0	0.0
LFRAC	1.0000	1.0000	1.0000	1.0000	1.0000
SFRAC	0.0	0.0	0.0	0.0	0.0
ENTHALPY:					
CAL/MOL	-1.5287+04	-1.5397+04	-1.5397+04	-1.5123+04	-1.5397+04
CAL/GM	-127.4350	-128.2298	-128.2298	-125.8212	-128.2298
CAL/SEC	-6393.4007	-7.1385+06	-7.1385+06	-6.9899+06	-7.0671+06
ENTROPY:					
CAL/MOL-K	-133.7298	-133.9089	-133.9089	-133.9999	-133.9089
CAL/GM-K	-1.1148	-1.1152	-1.1152	-1.1149	-1.1152
DENSITY:					
MOL/CC	7.1880-03	7.1822-03	7.1822-03	7.1740-03	7.1822-03
GM/CC	0.8623	0.8624	0.8624	0.8623	0.8624
AVG MW	119.9612	120.0754	120.0754	120.1943	120.0754

SOLVREC2 W-ETH W-ETH2 WATER WATEROUT

STREAM ID	SOLVREC2	W-ETH	W-ETH2	WATER	WATEROUT
FROM :	COL1	COL3	HEAT7	LLE2	LLE
TO :	HEAT2	HEAT7	WATERMIX	WATERMIX	WATERMIX
SUBSTREAM: MIXED					
PHASE:	LIQUID	LIQUID	LIQUID	LIQUID	LIQUID
COMPONENTS: KMOL/HR					
BUTANOL	2.1481	6.6237	6.6237	4.4104-15	1.8040-07
ACETONE	4.3402-06	4.0473	4.0473	7.0744-08	8.9020-04
ETHANOL	2.0072-08	2.9790	2.9790	8.9742-10	2.4160-03
WATER	1.5451-16	20.5942	20.5942	1.2416	4515.2846
CO2	2.6411-25	3.1741-16	3.1741-16	3.6516-08	12.4263
N-BUT-01	2.8693	2.1345-13	2.1345-13	0.0	1.7691-09
ACETI-01	0.1215	5.8582-03	5.8582-03	1.4032-16	1.0096
1:3:5-01	1663.8891	9.0333-09	9.0333-09	8.6916-06	3.9874-02
HYDROGEN	0.0	0.0	0.0	4.2323-15	0.6095
COMPONENTS: MOLE FRAC					
BUTANOL	1.2871-03	0.1934	0.1934	3.5521-15	3.9829-11
ACETONE	2.6004-09	0.1182	0.1182	5.6977-08	1.9654-07
ETHANOL	1.2026-11	8.6977-02	8.6977-02	7.2278-10	5.3340-07
WATER	9.2575-20	0.6013	0.6013	1.0000	0.9969
CO2	1.5824-28	9.2675-18	9.2675-18	2.9409-08	2.7435-03
N-BUT-01	1.7191-03	6.2323-15	6.2323-15	0.0	3.9059-13
ACETI-01	7.2774-05	1.7104-04	1.7104-04	1.1301-16	2.2289-04
1:3:5-01	0.9969	2.6374-10	2.6374-10	7.0002-06	8.8034-06
HYDROGEN	0.0	0.0	0.0	3.4086-15	1.3456-04
TOTAL FLOW:					
KMOL/HR	1669.0280	34.2500	34.2500	1.2416	4529.3731
KG/HR	2.0041+05	1234.6315	1234.6315	22.3692	8.1958+04
L/MIN	4737.7408	26.5798	24.0026	0.3750	1377.6954
STATE VARIABLES:					
TEMP C	192.7891	99.9366	30.0000	24.7714	28.6367
PRES BAR	2.0000	2.1551	2.1551	1.0000	1.0000
VFRAC	0.0	0.0	0.0	0.0	0.0
LFRAC	1.0000	1.0000	1.0000	1.0000	1.0000
SFRAC	0.0	0.0	0.0	0.0	0.0
ENTHALPY:					
CAL/MOL	-5559.4126	-6.6395+04	-6.9471+04	-6.8266+04	-6.8270+04
CAL/GM	-46.2993	-1841.8787	-1927.1951	-3789.1809	-3772.9306
CAL/SEC	-2.5774+06	-6.3168+05	-6.6094+05	-2.3545+04	-8.5895+07
ENTROPY:					
CAL/MOL-K	-108.2857	-56.4035	-65.4802	-38.9794	-38.6315

```
  CAL/GM-K              -0.9018    -1.5647    -1.8165    -2.1636    -2.1350
 DENSITY:
  MOL/CC              5.8714-03  2.1476-02  2.3782-02  5.5183-02  5.4794-02
  GM/CC                 0.7050     0.7742     0.8573     0.9942     0.9915
 AVG MW                120.0754    36.0476    36.0476    18.0160    18.0947

SOLADD2
 -------

 STREAM ID              SOLADD2
 FROM :                 ----
 TO   :                 MIXER2

 SUBSTREAM: MIXED
 PHASE:                 LIQUID
 COMPONENTS: KMOL/HR
  BUTANOL                0.0
  ACETONE                0.0
  ETHANOL                0.0
  WATER                  0.0
  CO2                    0.0
  N-BUT-01               0.0
  ACETI-01               0.0
  1:3:5-01               1.5000
 COMPONENTS: MOLE FRAC
  BUTANOL                0.0
  ACETONE                0.0
  ETHANOL                0.0
  WATER                  0.0
  CO2                    0.0
  N-BUT-01               0.0
  ACETI-01               0.0
  1:3:5-01               1.0000
 TOTAL FLOW:
  KMOL/HR                1.5000
  KG/HR                180.2852
  L/MIN                209.2050
 STATE VARIABLES:
  TEMP   C              25.0000
  PRES   BAR             1.0000
  VFRAC                  0.0
  LFRAC                  1.0000
  SFRAC                  0.0
 ENTHALPY:
  CAL/MOL            -1.5123+04
  CAL/GM              -125.8212
  CAL/SEC            -4200.8293
 ENTROPY:
  CAL/MOL-K           -133.9999
  CAL/GM-K              -1.1149
 DENSITY:
  MOL/CC              7.1740-03
  GM/CC                 0.8623
 AVG MW                120.1943

 SOLADD1
 -------

 STREAM ID              SOLADD1
 FROM :                 ----
 TO   :                 MIXER1

 SUBSTREAM: MIXED
 PHASE:                 LIQUID
 COMPONENTS: KMOL/HR
  BUTANOL                0.0
  ACETONE                0.0
  ETHANOL                0.0
  WATER                  0.0
  CO2                    0.0
  N-BUT-01               0.0
  ACETI-01               0.0
```

```
  1:3:5-01              16.6000
 COMPONENTS: MOLE FRAC
   BUTANOL               0.0
   ACETONE               0.0
   ETHANOL               0.0
   WATER                 0.0
   CO2                   0.0
   N-BUT-01              0.0
   ACETI-01              0.0
   1:3:5-01              1.0000
 TOTAL FLOW:
   KMOL/HR              16.6000
   KG/HR              1995.1540
   L/MIN              2309.2060
 STATE VARIABLES:
   TEMP   C             25.0000
   PRES   BAR            1.0000
   VFRAC                 0.0
   LFRAC                 1.0000
   SFRAC                 0.0
 ENTHALPY:
   CAL/MOL           -1.5123+04
   CAL/GM             -125.8212
   CAL/SEC           -2.1004+04
 ENTROPY:
   CAL/MOL-K          -133.9999
   CAL/GM-K             -1.1149
 DENSITY:
   MOL/CC            7.1740-03
   GM/CC                0.8623
 AVG MW                120.1943
```

COL1 Block Report

```
BLOCK:  COL1     MODEL: RADFRAC
 ------------------------------
    INLETS   - PUMPEXTR STAGE  10
    OUTLETS  - CO21     STAGE   1
               AEBW     STAGE   1
               SOLVREC2 STAGE  20
   PROPERTY OPTION SET:   NRTL      RENON (NRTL) / IDEAL GAS

                      ***  MASS AND ENERGY BALANCE  ***
                                   IN               OUT        RELATIVE DIFF.
    TOTAL BALANCE
       MOLE(KMOL/HR )            1854.03          1854.03          0.00000
       MASS(KG/HR   )            211905.          211905.       -0.652108E-12
       ENTHALPY(CAL/SEC )     -0.103133E+08   -0.632532E+07   -0.386686

                      ***  CO2 EQUIVALENT SUMMARY ***
    FEED STREAMS CO2E             392.282      KG/HR
    PRODUCT STREAMS CO2E          392.282      KG/HR
    NET STREAMS CO2E PRODUCTION -0.219444E-06  KG/HR
    UTILITIES CO2E PRODUCTION     0.00000      KG/HR
    TOTAL CO2E PRODUCTION       -0.219444E-06  KG/HR



                         **********************
                         ****  INPUT DATA  ****
                         **********************

   ****   INPUT PARAMETERS   ****
```

```
 NUMBER OF STAGES                                          20
 ALGORITHM OPTION                                      STANDARD
 ABSORBER OPTION                                       NO
 INITIALIZATION OPTION                                 STANDARD
 HYDRAULIC PARAMETER CALCULATIONS                      NO
 INSIDE LOOP CONVERGENCE METHOD                        BROYDEN
 DESIGN SPECIFICATION METHOD                           NESTED
 MAXIMUM NO. OF OUTSIDE LOOP ITERATIONS                  25
 MAXIMUM NO. OF INSIDE LOOP ITERATIONS                   10
 MAXIMUM NUMBER OF FLASH ITERATIONS                      30
 FLASH TOLERANCE                                          0.000100000
 OUTSIDE LOOP CONVERGENCE TOLERANCE                       0.000100000

****    COL-SPECS    ****

 MOLAR VAPOR DIST / TOTAL DIST                            0.050000
 MOLAR REFLUX RATIO                                       5.00000
 MOLAR DISTILLATE RATE          KMOL/HR                 185.000

****     PROFILES    ****

 P-SPEC          STAGE   1  PRES, BAR                     2.00000

                     ******************
                     ****  RESULTS  ****
                     ******************


***    COMPONENT SPLIT FRACTIONS    ***

                          OUTLET STREAMS
                          --------------
               CO21          AEBW          SOLVREC2
 COMPONENT:
 BUTANOL      .25731E-02   .97979        .17633E-01
 ACETONE      .50746E-01   .94925        .15732E-06
 ETHANOL      .14325E-01   .98567        .60932E-08
 WATER        .20019E-01   .97998       0.0000
 CO2          .73618       .26382       0.0000
 N-BUT-01     .87946E-10   .22981E-06   1.0000
 ACETI-01     .22601E-02   .83054        .16720
 1:3:5-01     .53698E-09   .58671E-06   1.0000
 HYDROGEN     .99649       .35087E-02   0.0000


***     SUMMARY OF KEY RESULTS     ***

 TOP STAGE TEMPERATURE          C                          63.2519
 BOTTOM STAGE TEMPERATURE       C                         192.789
 TOP STAGE LIQUID FLOW          KMOL/HR                   925.000
 BOTTOM STAGE LIQUID FLOW       KMOL/HR                 1,669.03
 TOP STAGE VAPOR FLOW           KMOL/HR                     9.25000
 BOILUP VAPOR FLOW              KMOL/HR                 3,128.37
 MOLAR REFLUX RATIO                                       5.00000
 MOLAR BOILUP RATIO                                       1.87437
 CONDENSER DUTY (W/O SUBCOOL)   CAL/SEC            -3,759,900.
 REBOILER DUTY                  CAL/SEC             7,748,590.

****    MAXIMUM FINAL RELATIVE ERRORS    ****

 DEW POINT                       0.23541E-03  STAGE=  1
 BUBBLE POINT                    0.10323E-02  STAGE=  1
 COMPONENT MASS BALANCE          0.12850E-04  STAGE= 13 COMP=WATER
 ENERGY BALANCE                  0.16849E-02  STAGE=  1


****     PROFILES    ****

**NOTE** REPORTED VALUES FOR STAGE LIQUID AND VAPOR RATES ARE THE FLOWS
          FROM THE STAGE INCLUDING ANY SIDE PRODUCT.
```

STAGE	TEMPERATURE C	PRESSURE BAR	ENTHALPY CAL/MOL LIQUID	ENTHALPY CAL/MOL VAPOR	HEAT DUTY CAL/SEC
1	63.252	2.0000	-72578.	-79642.	-.37599+07
2	128.74	2.0000	-71561.	-60430.	
8	138.85	2.0000	-67147.	-61079.	
9	143.45	2.0000	-56786.	-57896.	
10	154.47	2.0000	-37826.	-48834.	
11	156.36	2.0000	-36932.	-47903.	
18	191.46	2.0000	-6313.9	410.20	
19	192.42	2.0000	-5779.5	2268.6	
20	192.79	2.0000	-5559.4	3019.8	.77486+07

STAGE	FLOW RATE KMOL/HR LIQUID	FLOW RATE KMOL/HR VAPOR	FEED RATE KMOL/HR LIQUID	FEED RATE KMOL/HR VAPOR	FEED RATE KMOL/HR MIXED	PRODUCT RATE KMOL/HR LIQUID	PRODUCT RATE KMOL/HR VAPOR
1	1101.	9.250				175.7500	9.2500
2	1171.	1110.					
8	1163.	1358.					
9	1141.	1348.		0.3684			
10	4245.	1326.	1853.6595				
11	4260.	2576.					
18	4773.	3046.					
19	4797.	3103.					
20	1669.	3128.				1669.0280	

**** MASS FLOW PROFILES ****

STAGE	FLOW RATE KG/HR LIQUID	FLOW RATE KG/HR VAPOR	FEED RATE KG/HR LIQUID	FEED RATE KG/HR VAPOR	FEED RATE KG/HR MIXED	PRODUCT RATE KG/HR LIQUID	PRODUCT RATE KG/HR VAPOR
1	0.6946E+05	405.3				.11090+05	405.3166
2	0.8316E+05	0.6987E+05					
8	0.8979E+05	0.9905E+05					
9	0.9657E+05	0.1013E+06		5.3236			
10	0.4163E+06	0.1081E+06	.21190+06				
11	0.4211E+06	0.2159E+06					
18	0.5708E+06	0.3596E+06					
19	0.5754E+06	0.3704E+06					
20	0.2004E+06	0.3750E+06				.20041+06	

**** MOLE-X-PROFILE ****

STAGE	BUTANOL	ACETONE	ETHANOL	WATER	CO2
1	0.67918	0.14901	0.18475E-01	0.13651	0.13380E-01
2	0.91153	0.35832E-01	0.63150E-02	0.40819E-01	0.10919E-03
8	0.90220	0.61449E-02	0.79721E-03	0.44929E-02	0.30485E-04
9	0.74448	0.73837E-02	0.71307E-03	0.28996E-02	0.28887E-04
10	0.45965	0.75383E-02	0.54528E-03	0.11146E-02	0.25389E-04
11	0.45036	0.34340E-02	0.15128E-03	0.91481E-04	0.15545E-06
18	0.10725E-01	0.17441E-06	0.87800E-09	0.77854E-15	0.10280E-22
19	0.38872E-02	0.21883E-07	0.10514E-09	0.85791E-17	0.40488E-25
20	0.12871E-02	0.26004E-08	0.12026E-10	0.92575E-19	0.15824E-27

**** MOLE-X-PROFILE ****

STAGE	N-BUT-01	ACETI-01	1:3:5-01	HYDROGEN
1	0.37519E-08	0.34328E-02	0.55546E-05	0.87283E-05
2	0.24757E-07	0.53655E-02	0.29638E-04	0.61110E-07
8	0.12386E-03	0.83194E-02	0.77890E-01	0.45222E-07
9	0.40398E-03	0.73270E-02	0.23677	0.45296E-07
10	0.90783E-03	0.48508E-02	0.52536	0.20020E-07
11	0.94050E-03	0.54310E-02	0.53959	0.45676E-11
18	0.20049E-02	0.42520E-03	0.98684	0.12560E-36
19	0.18906E-02	0.18462E-03	0.99404	0.26778E-40
20	0.17191E-02	0.72774E-04	0.99692	0.56930E-44

**** MOLE-Y-PROFILE ****

STAGE	BUTANOL	ACETONE	ETHANOL	WATER	CO2
1	0.33890E-01	0.15135	0.51015E-02	0.52984E-01	0.70940
2	0.67380	0.14903	0.18363E-01	0.13581	0.19180E-01
8	0.91539	0.25138E-01	0.31407E-02	0.22502E-01	0.65900E-02
9	0.86716	0.25771E-01	0.31319E-02	0.22041E-01	0.66398E-02

10	0.73107	0.27163E-01	0.30985E-02	0.20939E-01	0.66830E-02
11	0.75667	0.12423E-01	0.89862E-03	0.18368E-02	0.41842E-04
18	0.42693E-01	0.20480E-05	0.11011E-07	0.10476E-12	0.39773E-20
19	0.15801E-01	0.26680E-06	0.13437E-08	0.11972E-14	0.15808E-22
20	0.52744E-02	0.32171E-07	0.15482E-09	0.13107E-16	0.62004E-25

**** MOLE-Y-PROFILE ****

STAGE	N-BUT-01	ACETI-01	1:3:5-01	HYDROGEN
1	0.27280E-10	0.17749E-03	0.96593E-07	0.47099E-01
2	0.37208E-08	0.34057E-02	0.55092E-05	0.40114E-03
8	0.27832E-04	0.76073E-02	0.19278E-01	0.32196E-03
9	0.10686E-03	0.76263E-02	0.67199E-01	0.32442E-03
10	0.34772E-03	0.67629E-02	0.20379	0.14447E-03
11	0.38212E-03	0.79469E-02	0.21980	0.32993E-07
18	0.22324E-02	0.13874E-02	0.95369	0.90589E-33
19	0.21586E-02	0.61474E-03	0.98143	0.19314E-36
20	0.19821E-02	0.24429E-03	0.99250	0.41062E-40

**** K-VALUES ****

STAGE	BUTANOL	ACETONE	ETHANOL	WATER	CO2
1	0.49874E-01	1.0161	0.27614	0.38816	53.085
2	0.73919	4.1600	2.9082	3.3277	175.70
8	1.0146	4.0897	3.9396	5.0096	216.16
9	1.1648	3.4886	4.3919	7.6048	229.82
10	1.5905	3.6029	5.6820	18.797	263.17
11	1.6801	3.6174	5.9395	20.093	269.10
18	3.9806	11.743	12.541	134.57	386.90
19	4.0648	12.192	12.780	139.55	390.44
20	4.0980	12.371	12.874	141.58	391.83

**** K-VALUES ****

STAGE	N-BUT-01	ACETI-01	1:3:5-01	HYDROGEN
1	0.72670E-02	0.51706E-01	0.17387E-01	5407.7
2	0.15033	0.63489	0.18589	6565.7
8	0.22473	0.91441	0.24751	7118.8
9	0.26453	1.0408	0.28382	7160.2
10	0.38305	1.3941	0.38791	7213.6
11	0.40633	1.4632	0.40734	7220.4
18	1.1135	3.2630	0.96640	7212.6
19	1.1418	3.3298	0.98731	7212.6
20	1.1530	3.3568	0.99556	7212.6

**** MASS-X-PROFILE ****

STAGE	BUTANOL	ACETONE	ETHANOL	WATER	CO2
1	0.79779	0.13715	0.13488E-01	0.38972E-01	0.93317E-02
2	0.95158	0.29311E-01	0.40974E-02	0.10357E-01	0.67681E-04
8	0.86599	0.46217E-02	0.47560E-03	0.10482E-02	0.17374E-04
9	0.65203	0.50672E-02	0.38816E-03	0.61723E-03	0.15022E-04
10	0.34741	0.44643E-02	0.25614E-03	0.20474E-03	0.11393E-04
11	0.33769	0.20176E-02	0.70503E-04	0.16672E-04	0.69207E-07
18	0.66464E-02	0.84688E-07	0.33817E-09	0.11726E-15	0.37824E-23
19	0.24022E-02	0.10596E-07	0.40385E-10	0.12886E-17	0.14856E-25
20	0.79450E-03	0.12578E-08	0.46140E-11	0.13889E-19	0.57999E-28

**** MASS-X-PROFILE ****

STAGE	N-BUT-01	ACETI-01	1:3:5-01	HYDROGEN
1	0.52384E-08	0.32669E-02	0.10580E-04	0.27883E-06
2	0.30720E-07	0.45380E-02	0.50172E-04	0.17350E-08
8	0.14131E-03	0.64697E-02	0.12123	0.11805E-08
9	0.42057E-03	0.51990E-02	0.33626	0.10789E-08
10	0.81558E-03	0.29703E-02	0.64387	0.41152E-09
11	0.83824E-03	0.32992E-02	0.65607	0.93145E-13
18	0.14768E-02	0.21348E-03	0.99166	0.21168E-38
19	0.13888E-02	0.92433E-04	0.99612	0.45006E-42
20	0.12614E-02	0.36396E-04	0.99791	0.95577E-46

**** MASS-Y-PROFILE ****

STAGE	BUTANOL	ACETONE	ETHANOL	WATER	CO2
1	0.57328E-01	0.20061	0.53636E-02	0.21784E-01	0.71251
2	0.79349	0.13751	0.13441E-01	0.38872E-01	0.13411E-01
8	0.93038	0.20020E-01	0.19840E-02	0.55585E-02	0.39768E-02
9	0.85529	0.19917E-01	0.19199E-02	0.52836E-02	0.38884E-02

```
   10    0.66479       0.19355E-01   0.17512E-02   0.46278E-02   0.36083E-02
   11    0.66918       0.86088E-02   0.49393E-03   0.39482E-03   0.21971E-04
   18    0.26801E-01   0.10074E-05   0.42961E-08   0.15985E-13   0.14825E-20
   19    0.98123E-02   0.12982E-06   0.51863E-09   0.18069E-15   0.58287E-23
   20    0.32614E-02   0.15587E-07   0.59501E-10   0.19698E-17   0.22764E-25

                       ****   MASS-Y-PROFILE     ****
 STAGE     N-BUT-01      ACETI-01      1:3:5-01      HYDROGEN
    1    0.54853E-10   0.24326E-03   0.26496E-06   0.21668E-02
    2    0.52084E-08   0.32493E-02   0.10520E-04   0.12848E-04
    8    0.33625E-04   0.62642E-02   0.31772E-01   0.88995E-05
    9    0.12528E-03   0.60941E-02   0.10748       0.87024E-05
   10    0.37585E-03   0.49824E-02   0.30050       0.35728E-05
   11    0.40169E-03   0.56939E-02   0.31520       0.79355E-09
   18    0.16659E-02   0.70566E-03   0.97083       0.15467E-34
   19    0.15934E-02   0.30929E-03   0.98828       0.32620E-38
   20    0.14568E-02   0.12238E-03   0.99516       0.69053E-42
```

COL2 Block Report

```
 BLOCK:  COL2     MODEL: RADFRAC
 ------------------------------
    INLETS    - S-AEBW2  STAGE   8
    OUTLETS   - CO22     STAGE   1
                S-AEW    STAGE   1
                BUTANOL  STAGE  17
   PROPERTY OPTION SET:   NRTL      RENON (NRTL) / IDEAL GAS

                      ***  MASS AND ENERGY BALANCE  ***
                                    IN               OUT        RELATIVE DIFF.
    TOTAL BALANCE
       MOLE(KMOL/HR )            175.750          175.750        0.161717E-15
       MASS(KG/HR   )            11090.4          11090.4        0.247185E-10
       ENTHALPY(CAL/SEC )     -0.364396E+07    -0.339050E+07   -0.695579E-01

                      ***  CO2 EQUIVALENT SUMMARY ***
    FEED STREAMS CO2E             103.492      KG/HR
    PRODUCT STREAMS CO2E          103.492      KG/HR
    NET STREAMS CO2E PRODUCTION -0.456968E-06  KG/HR
    UTILITIES CO2E PRODUCTION     0.00000      KG/HR
    TOTAL CO2E PRODUCTION       -0.456968E-06  KG/HR



                         **********************
                         ****  INPUT DATA  ****
                         **********************

   ****    INPUT PARAMETERS    ****

    NUMBER OF STAGES                                          17
    ALGORITHM OPTION                                      STANDARD
    ABSORBER OPTION                                       NO
    INITIALIZATION OPTION                                 STANDARD
    HYDRAULIC PARAMETER CALCULATIONS                      NO
    INSIDE LOOP CONVERGENCE METHOD                        BROYDEN
    DESIGN SPECIFICATION METHOD                           NESTED
    MAXIMUM NO. OF OUTSIDE LOOP ITERATIONS                25
    MAXIMUM NO. OF INSIDE LOOP ITERATIONS                 10
    MAXIMUM NUMBER OF FLASH ITERATIONS                    30
    FLASH TOLERANCE                                        0.000100000
    OUTSIDE LOOP CONVERGENCE TOLERANCE                     0.000100000

   ****    COL-SPECS    ****

    MOLAR VAPOR DIST / TOTAL DIST                          0.100000
    MOLAR REFLUX RATIO                                     2.00000
    MOLAR DISTILLATE RATE          KMOL/HR                62.5000
```

**** PROFILES ****

P-SPEC STAGE 1 PRES, BAR 2.00000

****
**** RESULTS ****
****

*** COMPONENT SPLIT FRACTIONS ***

	OUTLET STREAMS		
COMPONENT:	CO22	S-AEW	BUTANOL
BUTANOL	.76467E-03	.55490E-01	.94375
ACETONE	.12164	.87836	.31935E-05
ETHANOL	.49545E-01	.95042	.31257E-04
WATER	.35299E-01	.96469	.10847E-04
CO2	.83516	.16484	0.0000
N-BUT-01	.50049E-09	.32372E-06	1.0000
ACETI-01	.59198E-04	.97100E-02	.99023
1:3:5-01	.71614E-07	.92532E-05	.99999
HYDROGEN	.99774	.22606E-02	0.0000

*** SUMMARY OF KEY RESULTS ***

TOP STAGE TEMPERATURE	C	72.0230
BOTTOM STAGE TEMPERATURE	C	138.398
TOP STAGE LIQUID FLOW	KMOL/HR	125.000
BOTTOM STAGE LIQUID FLOW	KMOL/HR	113.250
TOP STAGE VAPOR FLOW	KMOL/HR	6.25000
BOILUP VAPOR FLOW	KMOL/HR	268.564
MOLAR REFLUX RATIO		2.00000
MOLAR BOILUP RATIO		2.37142
CONDENSER DUTY (W/O SUBCOOL)	CAL/SEC	-466,998.
REBOILER DUTY	CAL/SEC	720,466.

**** MAXIMUM FINAL RELATIVE ERRORS ****

DEW POINT	0.34449E-04	STAGE= 2	
BUBBLE POINT	0.80324E-04	STAGE= 3	
COMPONENT MASS BALANCE	0.74826E-05	STAGE= 7	COMP=CO2
ENERGY BALANCE	0.31669E-03	STAGE= 3	

**** PROFILES ****

NOTE REPORTED VALUES FOR STAGE LIQUID AND VAPOR RATES ARE THE FLOWS FROM THE STAGE INCLUDING ANY SIDE PRODUCT.

STAGE	TEMPERATURE C	PRESSURE BAR	ENTHALPY CAL/MOL LIQUID	ENTHALPY CAL/MOL VAPOR	HEAT DUTY CAL/SEC
1	72.023	2.0000	-64426.	-65347.	-.46700+06
2	98.337	2.0000	-67325.	-55491.	
7	126.85	2.0000	-71334.	-59723.	
8	126.93	2.0000	-71353.	-59748.	
9	134.41	2.0000	-71882.	-61264.	
15	138.39	2.0000	-72153.	-62479.	
16	138.40	2.0000	-72161.	-62487.	
17	138.40	2.0000	-72171.	-62498.	.72047+06

STAGE	FLOW RATE KMOL/HR LIQUID	FLOW RATE KMOL/HR VAPOR	FEED RATE KMOL/HR LIQUID	FEED RATE KMOL/HR VAPOR	FEED RATE KMOL/HR MIXED	PRODUCT RATE KMOL/HR LIQUID	PRODUCT RATE KMOL/HR VAPOR
1	181.3	6.250				56.2500	6.2500
2	125.1	187.5					
7	119.4	181.8					
8	379.5	181.9	175.7500				

9	380.7	266.3						
15	381.8	268.5						
16	381.8	268.5						
17	113.2	268.6				113.2500		

**** MASS FLOW PROFILES ****

STAGE	FLOW RATE KG/HR		FEED RATE KG/HR			PRODUCT RATE KG/HR	
	LIQUID	VAPOR	LIQUID	VAPOR	MIXED	LIQUID	VAPOR
1	7745.	300.9				2403.4783	300.8838
2	5857.	8045.					
7	8375.	0.1105E+05					
8	0.2664E+05	0.1108E+05	.11090+05				
9	0.2766E+05	0.1825E+05					
15	0.2827E+05	0.1988E+05					
16	0.2827E+05	0.1989E+05					
17	8386.	0.1989E+05				8386.0273	

**** MOLE-X-PROFILE ****

STAGE	BUTANOL	ACETONE	ETHANOL	WATER	CO2
1	0.11775	0.40893	0.54862E-01	0.41146	0.68914E-02
2	0.37820	0.15388	0.48914E-01	0.41809	0.23992E-03
7	0.89178	0.42586E-01	0.87190E-02	0.53362E-01	0.77218E-04
8	0.89225	0.42456E-01	0.85767E-02	0.52726E-01	0.77030E-04
9	0.95953	0.13436E-01	0.35135E-02	0.19277E-01	0.55283E-06
15	0.99520	0.93414E-05	0.79410E-05	0.24321E-04	0.44854E-19
16	0.99502	0.27065E-05	0.27590E-05	0.77183E-05	0.29280E-21
17	0.99471	0.73848E-06	0.89618E-06	0.22980E-05	0.19075E-23

**** MOLE-X-PROFILE ****

STAGE	N-BUT-01	ACETI-01	1:3:5-01	HYDROGEN
1	0.37948E-14	0.10415E-03	0.16059E-09	0.61648E-07
2	0.76156E-13	0.66931E-03	0.83420E-09	0.20212E-08
7	0.42876E-09	0.34737E-02	0.82849E-06	0.13104E-08
8	0.20098E-08	0.39103E-02	0.30443E-05	0.13087E-08
9	0.20382E-08	0.42420E-02	0.30749E-05	0.27001E-12
15	0.21450E-08	0.47582E-02	0.32510E-05	0.16216E-34
16	0.26461E-08	0.49609E-02	0.40382E-05	0.31965E-38
17	0.58224E-08	0.52753E-02	0.86200E-05	0.63002E-42

**** MOLE-Y-PROFILE ****

STAGE	BUTANOL	ACETONE	ETHANOL	WATER	CO2
1	0.14604E-01	0.50968	0.25739E-01	0.13550	0.31423
2	0.11432	0.41229	0.53891E-01	0.40226	0.17136E-01
7	0.62012	0.17233	0.23901E-01	0.16861	0.12986E-01
8	0.62225	0.17194	0.23575E-01	0.16693	0.12980E-01
9	0.84867	0.60513E-01	0.12224E-01	0.75149E-01	0.10979E-03
15	0.99546	0.44780E-04	0.31405E-04	0.10591E-03	0.97685E-17
16	0.99540	0.12970E-04	0.10912E-04	0.33609E-04	0.63771E-19
17	0.99515	0.35364E-05	0.35445E-05	0.10004E-04	0.41546E-21

**** MOLE-Y-PROFILE ****

STAGE	N-BUT-01	ACETI-01	1:3:5-01	HYDROGEN
1	0.52803E-16	0.57145E-05	0.11186E-10	0.24489E-03
2	0.36700E-14	0.10087E-03	0.15561E-09	0.82224E-05
7	0.59872E-10	0.20472E-02	0.14775E-06	0.84387E-05
8	0.28142E-09	0.23124E-02	0.54384E-06	0.84350E-05
9	0.38825E-09	0.33298E-02	0.67294E-06	0.18653E-08
15	0.48169E-09	0.43542E-02	0.79418E-06	0.11695E-30
16	0.59409E-09	0.45402E-02	0.98660E-06	0.23055E-34
17	0.13066E-08	0.48283E-02	0.21061E-05	0.45441E-38

**** K-VALUES ****

STAGE	BUTANOL	ACETONE	ETHANOL	WATER	CO2
1	0.12402	1.2464	0.46916	0.32931	45.600
2	0.30238	2.6801	1.1018	0.96173	71.417
7	0.69537	4.0465	2.7412	3.1596	168.16
8	0.69740	4.0494	2.7487	3.1660	168.50
9	0.88447	4.5039	3.4791	3.8984	198.60
15	1.0003	4.7938	3.9547	4.3548	217.78
16	1.0004	4.7920	3.9551	4.3544	217.80

17	1.0004	4.7888	3.9552	4.3534	217.81

**** K-VALUES ****

STAGE	N-BUT-01	ACETI-01	1:3:5-01	HYDROGEN
1	0.13914E-01	0.54869E-01	0.69654E-01	3972.7
2	0.48204E-01	0.15066	0.18678	4068.4
7	0.13964	0.58935	0.17833	6439.4
8	0.14003	0.59136	0.17864	6444.8
9	0.19049	0.78496	0.21885	6908.1
15	0.22456	0.91508	0.24429	7212.3
16	0.22452	0.91520	0.24432	7212.5
17	0.22442	0.91526	0.24433	7212.6

**** MASS-X-PROFILE ****

STAGE	BUTANOL	ACETONE	ETHANOL	WATER	CO2
1	0.20427	0.55585	0.59151E-01	0.17348	0.70980E-02
2	0.59891	0.19094	0.48143E-01	0.16092	0.22559E-03
7	0.94229	0.35259E-01	0.57260E-02	0.13704E-01	0.48444E-04
8	0.94230	0.35134E-01	0.56296E-02	0.13534E-01	0.48301E-04
9	0.97874	0.10738E-01	0.22274E-02	0.47790E-02	0.33481E-06
15	0.99612	0.73263E-05	0.49401E-05	0.59166E-05	0.26657E-19
16	0.99596	0.21227E-05	0.17164E-05	0.18777E-05	0.17401E-21
17	0.99571	0.57922E-06	0.55755E-06	0.55908E-06	0.11337E-23

**** MASS-X-PROFILE ****

STAGE	N-BUT-01	ACETI-01	1:3:5-01	HYDROGEN
1	0.78248E-14	0.14637E-03	0.45174E-09	0.29085E-08
2	0.14335E-12	0.85871E-03	0.21421E-08	0.87050E-10
7	0.53851E-09	0.29737E-02	0.14195E-05	0.37656E-10
8	0.25229E-08	0.33458E-02	0.52134E-05	0.37588E-10
9	0.24712E-08	0.35056E-02	0.50860E-05	0.74903E-14
15	0.25520E-08	0.38586E-02	0.52765E-05	0.44142E-36
16	0.31482E-08	0.40230E-02	0.65544E-05	0.87015E-40
17	0.69278E-08	0.42782E-02	0.13992E-04	0.17151E-43

**** MASS-Y-PROFILE ****

STAGE	BUTANOL	ACETONE	ETHANOL	WATER	CO2
1	0.22486E-01	0.61490	0.24631E-01	0.50706E-01	0.28726
2	0.19747	0.55806	0.57860E-01	0.16889	0.17576E-01
7	0.75591	0.16461	0.18108E-01	0.49953E-01	0.93987E-02
8	0.75720	0.16394	0.17830E-01	0.49371E-01	0.93781E-02
9	0.91777	0.51276E-01	0.82160E-02	0.19752E-01	0.70494E-04
15	0.99639	0.35121E-04	0.19537E-04	0.25766E-04	0.58053E-17
16	0.99629	0.10172E-04	0.67882E-05	0.81758E-05	0.37897E-19
17	0.99607	0.27736E-05	0.22050E-05	0.24337E-05	0.24690E-21

**** MASS-Y-PROFILE ****

STAGE	N-BUT-01	ACETI-01	1:3:5-01	HYDROGEN
1	0.96637E-16	0.71283E-05	0.27928E-10	0.10254E-04
2	0.75358E-14	0.14116E-03	0.43589E-09	0.38629E-06
7	0.86751E-10	0.20218E-02	0.29205E-06	0.27976E-06
8	0.40706E-09	0.22798E-02	0.10731E-05	0.27915E-06
9	0.49907E-09	0.29173E-02	0.11801E-05	0.54859E-10
15	0.57309E-09	0.35309E-02	0.12890E-05	0.31837E-32
16	0.70680E-09	0.36816E-02	0.16013E-05	0.62756E-36
17	0.15546E-08	0.39154E-02	0.34184E-05	0.12370E-39

COL3 Block Report

```
BLOCK:  COL3     MODEL: RADFRAC
------------------------------
   INLETS    - S-AEW2    STAGE    8
   OUTLETS   - CO23      STAGE    1
               ACETONE   STAGE    1
               W-ETH     STAGE   16
  PROPERTY OPTION SET:    NRTL       RENON (NRTL) / IDEAL GAS
```

```
                  ***  MASS AND ENERGY BALANCE  ***
                                IN                OUT         RELATIVE DIFF.
 TOTAL BALANCE
    MOLE(KMOL/HR )           56.2500           56.2500          0.00000
    MASS(KG/HR   )           2403.48           2403.48        -0.139522E-09
    ENTHALPY(CAL/SEC )    -0.103835E+07     -992172.        -0.444719E-01

                  ***  CO2 EQUIVALENT SUMMARY ***
 FEED STREAMS CO2E             17.0600       KG/HR
 PRODUCT STREAMS CO2E          17.0600       KG/HR
 NET STREAMS CO2E PRODUCTION -0.196424E-05   KG/HR
 UTILITIES CO2E PRODUCTION     0.00000       KG/HR
 TOTAL CO2E PRODUCTION       -0.196424E-05   KG/HR



                     **********************
                     ****  INPUT DATA  ****
                     **********************

****    INPUT PARAMETERS    ****

 NUMBER OF STAGES                                          16
 ALGORITHM OPTION                                      STANDARD
 ABSORBER OPTION                                       NO
 INITIALIZATION OPTION                                 STANDARD
 HYDRAULIC PARAMETER CALCULATIONS                      NO
 INSIDE LOOP CONVERGENCE METHOD                        BROYDEN
 DESIGN SPECIFICATION METHOD                           NESTED
 MAXIMUM NO. OF OUTSIDE LOOP ITERATIONS                25
 MAXIMUM NO. OF INSIDE LOOP ITERATIONS                 10
 MAXIMUM NUMBER OF FLASH ITERATIONS                    30
 FLASH TOLERANCE                                        0.000100000
 OUTSIDE LOOP CONVERGENCE TOLERANCE                     0.000100000

****    COL-SPECS    ****

 MOLAR VAPOR DIST / TOTAL DIST                          0.100000
 MOLAR REFLUX RATIO                                     3.00000
 MOLAR DISTILLATE RATE          KMOL/HR                22.0000

****     PROFILES    ****

 P-SPEC          STAGE   1  PRES, BAR                   2.00000

                     ********************
                     ****  RESULTS  ****
                     ********************


***    COMPONENT SPLIT FRACTIONS    ***

                          OUTLET STREAMS
                          --------------
               CO23          ACETONE       W-ETH
 COMPONENT:
 BUTANOL      .12937E-07    .98881E-06    1.0000
 ACETONE      .71906E-01    .75214        .17595
 ETHANOL      .20112E-02    .32668E-01    .96532
 WATER        .86464E-02    .10154        .88981
 CO2          .87621        .12379        0.0000
 N-BUT-01     MISSING       MISSING       MISSING
 ACETI-01     .26471E-09    .31475E-07    1.0000
 1:3:5-01     .40636E-12    .13268E-09    1.0000
 HYDROGEN     .99840        .16038E-02    0.0000


***     SUMMARY OF KEY RESULTS     ***

 TOP STAGE TEMPERATURE          C                      71.4842
 BOTTOM STAGE TEMPERATURE       C                      99.9366
 TOP STAGE LIQUID FLOW          KMOL/HR                66.0000
```

BOTTOM STAGE LIQUID FLOW	KMOL/HR	34.2500
TOP STAGE VAPOR FLOW	KMOL/HR	2.20000
BOILUP VAPOR FLOW	KMOL/HR	92.3464
MOLAR REFLUX RATIO		3.00000
MOLAR BOILUP RATIO		2.69624
CONDENSER DUTY (W/O SUBCOOL)	CAL/SEC	-181,871.
REBOILER DUTY	CAL/SEC	228,054.

**** MAXIMUM FINAL RELATIVE ERRORS ****

DEW POINT	0.23684E-04	STAGE= 6	
BUBBLE POINT	0.71465E-04	STAGE= 15	
COMPONENT MASS BALANCE	0.63133E-06	STAGE= 10	COMP=ACETI-01
ENERGY BALANCE	0.40532E-03	STAGE= 16	

**** PROFILES ****

NOTE REPORTED VALUES FOR STAGE LIQUID AND VAPOR RATES ARE THE FLOWS FROM THE STAGE INCLUDING ANY SIDE PRODUCT.

STAGE	TEMPERATURE C	PRESSURE BAR	ENTHALPY CAL/MOL LIQUID	ENTHALPY CAL/MOL VAPOR	HEAT DUTY CAL/SEC
1	71.484	2.0000	-59111.	-57899.	-.18187+06
2	76.513	2.0103	-58915.	-51641.	
7	78.067	2.0621	-59961.	-51825.	
8	79.989	2.0724	-61508.	-52089.	
9	80.281	2.0827	-61497.	-51903.	
10	80.454	2.0931	-61499.	-51901.	
11	80.644	2.1034	-61509.	-51906.	
12	80.893	2.1138	-61552.	-51922.	
13	81.337	2.1241	-61719.	-51968.	
15	87.518	2.1448	-64398.	-52753.	
16	99.937	2.1551	-66395.	-54771.	.22805+06

STAGE	FLOW RATE KMOL/HR LIQUID	FLOW RATE KMOL/HR VAPOR	FEED RATE KMOL/HR LIQUID	FEED RATE KMOL/HR VAPOR	FEED RATE KMOL/HR MIXED	PRODUCT RATE KMOL/HR LIQUID	PRODUCT RATE KMOL/HR VAPOR
1	85.80	2.200				19.8000	2.2000
2	67.08	88.00					
7	63.89	87.50					
8	137.2	85.89	56.2500				
9	137.3	102.9					
10	137.3	103.0					
11	137.3	103.1					
12	137.3	103.1					
13	136.5	103.0					
15	126.6	99.25					
16	34.25	92.35				34.2500	

**** MASS FLOW PROFILES ****

STAGE	FLOW RATE KG/HR LIQUID	FLOW RATE KG/HR VAPOR	FEED RATE KG/HR LIQUID	FEED RATE KG/HR VAPOR	FEED RATE KG/HR MIXED	PRODUCT RATE KG/HR LIQUID	PRODUCT RATE KG/HR VAPOR
1	4567.	114.9				1053.9421	114.9046
2	3563.	4682.					
7	3203.	4543.					
8	6474.	4372.	2403.4783				
9	6479.	5239.					
10	6478.	5244.					
11	6473.	5243.					
12	6452.	5238.					
13	6355.	5217.					
15	5013.	4740.					
16	1235.	3779.				1234.6315	

**** MOLE-X-PROFILE ****

STAGE	BUTANOL	ACETONE	ETHANOL	WATER	CO2
1	0.33078E-06	0.87379	0.50916E-02	0.11869	0.24234E-02

2	0.23040E-05	0.87051	0.77681E-02	0.12163	0.91719E-04
7	0.10873E-01	0.76386	0.32468E-01	0.19272	0.74618E-04
8	0.54386E-01	0.62342	0.41120E-01	0.28094	0.82730E-04
9	0.54345E-01	0.62290	0.41672E-01	0.28103	0.19977E-05
10	0.54342E-01	0.62157	0.42873E-01	0.28117	0.48333E-07
11	0.54392E-01	0.61866	0.45444E-01	0.28146	0.11715E-08
12	0.54731E-01	0.61124	0.50912E-01	0.28307	0.28449E-10
13	0.56827E-01	0.58895	0.62329E-01	0.29184	0.69390E-12
15	0.11367	0.30654	0.10420	0.47552	0.42315E-15
16	0.19339	0.11817	0.86977E-01	0.60129	0.92675E-17

**** MOLE-X-PROFILE ****

STAGE	N-BUT-01	ACETI-01	1:3:5-01	HYDROGEN
1	0.15710E-26	0.93126E-11	0.60530E-19	0.28088E-09
2	0.10505E-24	0.10052E-09	0.17161E-17	0.72388E-11
7	0.35906E-16	0.48644E-05	0.55680E-11	0.83968E-11
8	0.15765E-14	0.45442E-04	0.68992E-10	0.96090E-11
9	0.15751E-14	0.45406E-04	0.68936E-10	0.30640E-14
10	0.15747E-14	0.45400E-04	0.68928E-10	0.98171E-18
11	0.15748E-14	0.45410E-04	0.68962E-10	0.31611E-21
12	0.15764E-14	0.45476E-04	0.69226E-10	0.10240E-24
13	0.15879E-14	0.45882E-04	0.71305E-10	0.33562E-28
15	0.19902E-14	0.63170E-04	0.16974E-09	0.41693E-35
16	0.62323E-14	0.17104E-03	0.26374E-09	0.16514E-38

**** MOLE-Y-PROFILE ****

STAGE	BUTANOL	ACETONE	ETHANOL	WATER	CO2
1	0.38949E-07	0.75183	0.28212E-02	0.90962E-01	0.15439
2	0.32349E-06	0.87074	0.50349E-02	0.11800	0.62226E-02
7	0.15190E-02	0.82722	0.19945E-01	0.14683	0.44830E-02
8	0.80882E-02	0.78890	0.25397E-01	0.17305	0.45689E-02
9	0.81194E-02	0.79159	0.25857E-01	0.17432	0.11027E-03
10	0.81230E-02	0.79069	0.26611E-01	0.17457	0.26618E-05
11	0.81374E-02	0.78885	0.28218E-01	0.17479	0.64394E-07
12	0.82107E-02	0.78494	0.31646E-01	0.17520	0.15608E-08
13	0.86249E-02	0.77519	0.38919E-01	0.17726	0.37909E-10
15	0.25646E-01	0.64832	0.83027E-01	0.24300	0.23147E-13
16	0.84099E-01	0.37641	0.11059	0.42887	0.57666E-15

**** MOLE-Y-PROFILE ****

STAGE	N-BUT-01	ACETI-01	1:3:5-01	HYDROGEN
1	0.18066E-28	0.70489E-12	0.16685E-20	0.15737E-05
2	0.15322E-26	0.90974E-11	0.59058E-19	0.39617E-07
7	0.54082E-18	0.40376E-06	0.23966E-12	0.39639E-07
8	0.26709E-16	0.36184E-05	0.41418E-11	0.40382E-07
9	0.26916E-16	0.36369E-05	0.41692E-11	0.12807E-10
10	0.26998E-16	0.36419E-05	0.41782E-11	0.40826E-14
11	0.27121E-16	0.36509E-05	0.41932E-11	0.13079E-17
12	0.27387E-16	0.36694E-05	0.42467E-11	0.42114E-21
13	0.28271E-16	0.37227E-05	0.45455E-11	0.13644E-24
15	0.61163E-16	0.58581E-05	0.28516E-10	0.15356E-31
16	0.41690E-15	0.23161E-04	0.13487E-09	0.57151E-35

**** K-VALUES ****

STAGE	BUTANOL	ACETONE	ETHANOL	WATER	CO2
1	0.11775	0.86044	0.55406	0.76626	63.698
2	0.14040	1.0003	0.64815	0.97016	67.839
7	0.13970	1.0829	0.61432	0.76199	60.085
8	0.14871	1.2654	0.61763	0.61597	55.228
9	0.14941	1.2708	0.62049	0.62024	55.196
10	0.14948	1.2721	0.62069	0.62088	55.070
11	0.14960	1.2751	0.62093	0.62103	54.964
12	0.15001	1.2841	0.62157	0.61904	54.865
13	0.15177	1.3162	0.62441	0.60739	54.633
15	0.22558	2.1146	0.79672	0.51111	54.705
16	0.43483	3.1855	1.2715	0.71327	62.229

**** K-VALUES ****

STAGE	N-BUT-01	ACETI-01	1:3:5-01	HYDROGEN
1	0.11500E-01	0.75686E-01	0.27570E-01	5601.7
2	0.14585E-01	0.90500E-01	0.34417E-01	5472.1
7	0.15061E-01	0.83008E-01	0.43035E-01	4721.3

8	0.16941E-01	0.79627E-01	0.60028E-01	4202.7
9	0.17088E-01	0.80096E-01	0.60481E-01	4179.9
10	0.17144E-01	0.80217E-01	0.60619E-01	4158.5
11	0.17222E-01	0.80398E-01	0.60802E-01	4137.4
12	0.17372E-01	0.80694E-01	0.61330E-01	4113.0
13	0.17803E-01	0.81136E-01	0.63742E-01	4065.7
15	0.30725E-01	0.92737E-01	0.16791	3683.3
16	0.66887E-01	0.13541	0.51127	3461.3

**** MASS-X-PROFILE ****

STAGE	BUTANOL	ACETONE	ETHANOL	WATER	CO2
1	0.46062E-06	0.95342	0.44067E-02	0.40171E-01	0.20037E-02
2	0.32154E-05	0.95193	0.67379E-02	0.41256E-01	0.76000E-04
7	0.16074E-01	0.88478	0.29830E-01	0.69241E-01	0.65492E-04
8	0.85405E-01	0.76710	0.40134E-01	0.10723	0.77136E-04
9	0.85357E-01	0.76662	0.40680E-01	0.10728	0.18630E-05
10	0.85388E-01	0.76530	0.41871E-01	0.10738	0.45093E-07
11	0.85544E-01	0.76239	0.44421E-01	0.10759	0.10940E-08
12	0.86306E-01	0.75525	0.49897E-01	0.10849	0.26636E-10
13	0.90487E-01	0.73482	0.61684E-01	0.11295	0.65603E-12
15	0.21276	0.44959	0.12123	0.21633	0.47027E-15
16	0.39766	0.19039	0.11116	0.30050	0.11314E-16

**** MASS-X-PROFILE ****

STAGE	N-BUT-01	ACETI-01	1:3:5-01	HYDROGEN
1	0.26003E-26	0.10506E-10	0.13668E-18	0.10638E-10
2	0.17427E-24	0.11366E-09	0.38836E-17	0.27475E-12
7	0.63092E-16	0.58259E-05	0.13347E-10	0.33758E-12
8	0.29428E-14	0.57814E-04	0.17568E-09	0.41038E-12
9	0.29407E-14	0.57780E-04	0.17558E-09	0.13089E-15
10	0.29412E-14	0.57797E-04	0.17563E-09	0.41953E-19
11	0.29440E-14	0.57861E-04	0.17587E-09	0.13521E-22
12	0.29548E-14	0.58098E-04	0.17701E-09	0.43914E-26
13	0.30054E-14	0.59190E-04	0.18411E-09	0.14534E-29
15	0.44280E-14	0.95794E-04	0.51518E-09	0.21224E-36
16	0.15233E-13	0.28494E-03	0.87941E-09	0.92350E-40

**** MASS-Y-PROFILE ****

STAGE	BUTANOL	ACETONE	ETHANOL	WATER	CO2
1	0.55275E-07	0.83604	0.24885E-02	0.31375E-01	0.13009
2	0.45067E-06	0.95054	0.43596E-02	0.39955E-01	0.51472E-02
7	0.21686E-02	0.92539	0.17698E-01	0.50948E-01	0.38000E-02
8	0.11777E-01	0.90005	0.22983E-01	0.61238E-01	0.39498E-02
9	0.11821E-01	0.90300	0.23396E-01	0.61680E-01	0.95313E-04
10	0.11830E-01	0.90228	0.24087E-01	0.61792E-01	0.23016E-05
11	0.11857E-01	0.90068	0.25555E-01	0.61903E-01	0.55711E-07
12	0.11977E-01	0.89721	0.28691E-01	0.62117E-01	0.13518E-08
13	0.12622E-01	0.88893	0.35400E-01	0.63048E-01	0.32939E-10
15	0.39803E-01	0.78843	0.80090E-01	0.91666E-01	0.21330E-13
16	0.15235	0.53428	0.12452	0.18882	0.62023E-15

**** MASS-Y-PROFILE ****

STAGE	N-BUT-01	ACETI-01	1:3:5-01	HYDROGEN
1	0.30475E-28	0.81047E-12	0.38398E-20	0.60740E-07
2	0.25372E-26	0.10268E-10	0.13342E-18	0.15010E-08
7	0.91776E-18	0.46701E-06	0.55483E-12	0.15391E-08
8	0.46226E-16	0.42684E-05	0.97788E-11	0.15991E-08
9	0.46578E-16	0.42897E-05	0.98424E-11	0.50709E-12
10	0.46736E-16	0.42971E-05	0.98670E-11	0.16170E-15
11	0.46975E-16	0.43100E-05	0.99078E-11	0.51832E-19
12	0.47488E-16	0.43367E-05	0.10045E-10	0.16708E-22
13	0.49178E-16	0.44138E-05	0.10787E-10	0.54306E-26
15	0.11284E-15	0.73661E-05	0.71766E-10	0.64818E-33
16	0.89767E-15	0.33992E-04	0.39618E-09	0.28156E-36

COL4 Block Report

BLOCK: COL4 MODEL: RADFRAC

```
 INLETS   - MESACETO STAGE   5
 OUTLETS  - ACETONE2 STAGE   1
            MESITYL2 STAGE  10
PROPERTY OPTION SET:   NRTL      RENON (NRTL) / IDEAL GAS

                   ***  MASS AND ENERGY BALANCE  ***
                                    IN               OUT        RELATIVE DIFF.
 TOTAL BALANCE
    MOLE(KMOL/HR )             168.558          168.558         0.168616E-15
    MASS(KG/HR   )             19060.7          19060.7         0.135322E-12
    ENTHALPY(CAL/SEC )        -931743.         -610930.        -0.344315

                   ***  CO2 EQUIVALENT SUMMARY ***
 FEED STREAMS CO2E             2.11177      KG/HR
 PRODUCT STREAMS CO2E          2.11177      KG/HR
 NET STREAMS CO2E PRODUCTION   0.00000      KG/HR
 UTILITIES CO2E PRODUCTION     0.00000      KG/HR
 TOTAL CO2E PRODUCTION         0.00000      KG/HR


                      **********************
                      ****  INPUT DATA  ****
                      **********************

****   INPUT PARAMETERS   ****

 NUMBER OF STAGES                                          10
 ALGORITHM OPTION                                         STANDARD
 ABSORBER OPTION                                          NO
 INITIALIZATION OPTION                                    STANDARD
 HYDRAULIC PARAMETER CALCULATIONS                         NO
 INSIDE LOOP CONVERGENCE METHOD                           BROYDEN
 DESIGN SPECIFICATION METHOD                              NESTED
 MAXIMUM NO. OF OUTSIDE LOOP ITERATIONS                    25
 MAXIMUM NO. OF INSIDE LOOP ITERATIONS                     10
 MAXIMUM NUMBER OF FLASH ITERATIONS                        30
 FLASH TOLERANCE                                           0.000100000
 OUTSIDE LOOP CONVERGENCE TOLERANCE                        0.000100000

****   COL-SPECS   ****

 MOLAR VAPOR DIST / TOTAL DIST                             0.0
 MOLAR REFLUX RATIO                                        2.00000
 MOLAR DISTILLATE RATE          KMOL/HR                   18.0000

****    PROFILES   ****

 P-SPEC          STAGE   1  PRES, BAR                     1.00000

                      **********************
                      ****  RESULTS  ****
                      **********************


***   COMPONENT SPLIT FRACTIONS   ***

                          OUTLET STREAMS
                          --------------
               ACETONE2     MESITYL2
 COMPONENT:
 BUTANOL     .11737E-03   .99988
 ACETONE     .96971       .30292E-01
 ETHANOL     .65948       .34052
 WATER      1.0000        .33503E-07
 CO2        1.0000        .23377E-12
 ACETI-01    .43061E-04   .99996
 1:3:5-01    .24716E-06  1.0000
 HYDROGEN   1.0000        0.0000


***    SUMMARY OF KEY RESULTS    ***
```

TOP STAGE TEMPERATURE	C	48.0568
BOTTOM STAGE TEMPERATURE	C	162.189
TOP STAGE LIQUID FLOW	KMOL/HR	36.0000
BOTTOM STAGE LIQUID FLOW	KMOL/HR	150.558
TOP STAGE VAPOR FLOW	KMOL/HR	0.0
BOILUP VAPOR FLOW	KMOL/HR	146.697
MOLAR REFLUX RATIO		2.00000
MOLAR BOILUP RATIO		0.97435
CONDENSER DUTY (W/O SUBCOOL)	CAL/SEC	-115,155.
REBOILER DUTY	CAL/SEC	435,969.

**** MAXIMUM FINAL RELATIVE ERRORS ****

DEW POINT	0.95368E-04	STAGE= 1	
BUBBLE POINT	0.13414E-03	STAGE= 1	
COMPONENT MASS BALANCE	0.60275E-05	STAGE= 6	COMP=1:3:5-01
ENERGY BALANCE	0.10053E-03	STAGE= 4	

**** PROFILES ****

NOTE REPORTED VALUES FOR STAGE LIQUID AND VAPOR RATES ARE THE FLOWS FROM THE STAGE INCLUDING ANY SIDE PRODUCT.

STAGE	TEMPERATURE C	PRESSURE BAR	ENTHALPY CAL/MOL LIQUID	ENTHALPY CAL/MOL VAPOR	HEAT DUTY CAL/SEC
1	48.057	1.0000	-59160.	-62083.	-.11516+06
2	56.020	1.0000	-59079.	-51483.	
3	56.297	1.0000	-59277.	-51496.	
4	57.866	1.0000	-56951.	-51511.	
5	79.546	1.0000	-31429.	-49506.	
6	82.202	1.0000	-30975.	-48706.	
8	116.64	1.0000	-16751.	-39453.	
9	150.47	1.0000	-9445.1	-15137.	
10	162.19	1.0000	-7535.1	-706.59	.43597+06

STAGE	FLOW RATE KMOL/HR LIQUID	FLOW RATE KMOL/HR VAPOR	FEED RATE KMOL/HR LIQUID	FEED RATE KMOL/HR VAPOR	FEED RATE KMOL/HR MIXED	PRODUCT RATE KMOL/HR LIQUID	PRODUCT RATE KMOL/HR VAPOR
1	54.00	0.000				18.0000	
2	36.47	54.00					
3	35.65	54.47					
4	32.35	53.65					
5	267.9	50.35	168.5583				
6	269.1	117.4					
8	263.3	111.0					
9	297.3	112.7					
10	150.6	146.7				150.5583	

**** MASS FLOW PROFILES ****

STAGE	FLOW RATE KG/HR LIQUID	FLOW RATE KG/HR VAPOR	FEED RATE KG/HR LIQUID	FEED RATE KG/HR VAPOR	FEED RATE KG/HR MIXED	PRODUCT RATE KG/HR LIQUID	PRODUCT RATE KG/HR VAPOR
1	2999.	0.000				999.5579	
2	1996.	2999.					
3	1920.	2996.					
4	1844.	2920.					
5	0.2507E+05	2844.	.19061+05				
6	0.2534E+05	7013.					
8	0.2929E+05	7852.					
9	0.3520E+05	0.1123E+05					
10	0.1806E+05	0.1714E+05				.18061+05	

**** MOLE-X-PROFILE ****

STAGE	BUTANOL	ACETONE	ETHANOL	WATER	CO2
1	0.42705E-10	0.93206	0.36936E-02	0.61583E-01	0.26658E-02
2	0.36047E-09	0.91211	0.56271E-02	0.82149E-01	0.25257E-04
3	0.21391E-08	0.88341	0.77243E-02	0.10661	0.88332E-05

4	0.11750E-07	0.82981	0.98206E-02	0.10682	0.87905E-05
5	0.29363E-07	0.41093	0.60419E-02	0.62009E-02	0.52672E-05
6	0.38417E-07	0.40620	0.95020E-02	0.82941E-03	0.61537E-07
8	0.14961E-06	0.13542	0.69485E-02	0.18793E-05	0.45466E-11
9	0.10593E-06	0.26784E-01	0.16004E-02	0.25165E-07	0.21123E-13
10	0.43496E-07	0.34809E-02	0.22801E-03	0.24666E-09	0.74506E-16

**** MOLE-X-PROFILE ****

STAGE	ACETI-01	1:3:5-01	HYDROGEN
1	0.44111E-15	0.20597E-05	0.30897E-09
2	0.51611E-14	0.85800E-04	0.25102E-13
3	0.43442E-13	0.22437E-02	0.86610E-14
4	0.33349E-12	0.53548E-01	0.89901E-14
5	0.82520E-12	0.57682	0.79171E-14
6	0.10576E-11	0.58347	0.12607E-17
8	0.35749E-11	0.85763	0.32500E-25
9	0.26624E-11	0.97162	0.52622E-29
10	0.12247E-11	0.99629	0.73914E-33

**** MOLE-Y-PROFILE ****

STAGE	BUTANOL	ACETONE	ETHANOL	WATER	CO2
1	0.32233E-11	0.71539	0.17958E-02	0.30217E-01	0.25259
2	0.42705E-10	0.93206	0.36936E-02	0.61583E-01	0.26658E-02
3	0.25547E-09	0.91870	0.49882E-02	0.75353E-01	0.89778E-03
4	0.14358E-08	0.89973	0.63721E-02	0.91503E-01	0.90020E-03
5	0.75649E-08	0.86636	0.76303E-02	0.90647E-01	0.95863E-03
6	0.11231E-07	0.93363	0.13500E-01	0.14156E-01	0.12024E-04
8	0.14116E-06	0.76223	0.27930E-01	0.16260E-03	0.14949E-08
9	0.29133E-06	0.31164	0.15924E-01	0.43891E-05	0.10619E-10
10	0.17001E-06	0.50700E-01	0.30090E-02	0.50739E-07	0.42725E-13

**** MOLE-Y-PROFILE ****

STAGE	ACETI-01	1:3:5-01	HYDROGEN
1	0.27299E-16	0.31064E-07	0.39896E-05
2	0.44111E-15	0.20597E-05	0.30897E-09
3	0.36014E-14	0.58129E-04	0.10211E-09
4	0.29016E-13	0.14917E-02	0.10366E-09
5	0.21443E-12	0.34406E-01	0.11046E-09
6	0.31276E-12	0.38700E-01	0.18073E-13
8	0.34712E-11	0.20967	0.46854E-21
9	0.67139E-11	0.67243	0.75907E-25
10	0.41379E-11	0.94629	0.10662E-28

**** K-VALUES ****

STAGE	BUTANOL	ACETONE	ETHANOL	WATER	CO2
1	0.75473E-01	0.76762	0.48623	0.49063	94.777
2	0.11847	1.0219	0.65637	0.74955	105.54
3	0.11943	1.0399	0.64573	0.70670	101.63
4	0.12218	1.0842	0.64874	0.85623	102.38
5	0.25765	2.1083	1.2629	14.621	182.01
6	0.29235	2.2985	1.4208	17.067	195.40
8	0.94353	5.6291	4.0197	86.510	328.85
9	2.7502	11.635	9.9502	174.41	502.73
10	3.9085	14.565	13.196	205.70	573.45

**** K-VALUES ****

STAGE	ACETI-01	1:3:5-01	HYDROGEN
1	0.61889E-01	0.15082E-01	12917.
2	0.85462E-01	0.24008E-01	12307.
3	0.82893E-01	0.25911E-01	11789.
4	0.86986E-01	0.27863E-01	11527.
5	0.25987	0.59646E-01	13953.
6	0.29572	0.66327E-01	14336.
8	0.97099	0.24448	14421.
9	2.5218	0.69208	14425.
10	3.3789	0.94981	14425.

**** MASS-X-PROFILE ****

STAGE	BUTANOL	ACETONE	ETHANOL	WATER	CO2
1	0.57003E-10	0.97484	0.30643E-02	0.19979E-01	0.21127E-02
2	0.48824E-09	0.96801	0.47369E-02	0.27043E-01	0.20311E-04
3	0.29441E-08	0.95272	0.66076E-02	0.35662E-01	0.72184E-05

4	0.15278E-07	0.84540	0.79361E-02	0.33755E-01	0.67862E-05
5	0.23256E-07	0.25502	0.29741E-02	0.11937E-02	0.24769E-05
6	0.30237E-07	0.25051	0.46483E-02	0.15866E-03	0.28758E-07
8	0.99662E-07	0.70687E-01	0.28769E-02	0.30428E-06	0.17983E-11
9	0.66309E-07	0.13137E-01	0.62266E-03	0.38286E-08	0.78506E-14
10	0.26876E-07	0.16853E-02	0.87565E-04	0.37043E-10	0.27334E-16

**** MASS-X-PROFILE ****

STAGE	ACETI-01	1:3:5-01	HYDROGEN
1	0.47703E-15	0.44581E-05	0.11216E-10
2	0.56634E-14	0.18844E-03	0.92466E-15
3	0.48441E-13	0.50075E-02	0.32419E-15
4	0.35130E-12	0.11290	0.31790E-15
5	0.52951E-12	0.74081	0.17053E-15
6	0.67443E-12	0.74468	0.26987E-19
8	0.19294E-11	0.92644	0.58881E-27
9	0.13502E-11	0.98624	0.89586E-31
10	0.61306E-12	0.99823	0.12421E-34

**** MASS-Y-PROFILE ****

STAGE	BUTANOL	ACETONE	ETHANOL	WATER	CO2
1	0.44831E-11	0.77964	0.15524E-02	0.10215E-01	0.20859
2	0.57003E-10	0.97484	0.30643E-02	0.19979E-01	0.21127E-02
3	0.34435E-09	0.97029	0.41788E-02	0.24686E-01	0.71849E-03
4	0.19557E-08	0.96029	0.53945E-02	0.30293E-01	0.72803E-03
5	0.99280E-08	0.89090	0.62237E-02	0.28913E-01	0.74697E-03
6	0.13932E-07	0.90747	0.10408E-01	0.42678E-02	0.88559E-05
8	0.14786E-06	0.62563	0.18184E-01	0.41397E-04	0.92975E-09
9	0.21668E-06	0.18162	0.73615E-02	0.79343E-06	0.46895E-11
10	0.10787E-06	0.25206E-01	0.11866E-02	0.78245E-08	0.16096E-13

**** MASS-Y-PROFILE ****

STAGE	ACETI-01	1:3:5-01	HYDROGEN
1	0.30761E-16	0.70060E-07	0.15091E-06
2	0.47703E-15	0.44581E-05	0.11216E-10
3	0.39328E-14	0.12705E-03	0.37432E-11
4	0.32021E-13	0.32947E-02	0.38401E-11
5	0.22799E-12	0.73218E-01	0.39425E-11
6	0.31432E-12	0.77845E-01	0.60972E-15
8	0.29458E-11	0.35615	0.13348E-22
9	0.40458E-11	0.81101	0.15355E-26
10	0.21271E-11	0.97361	0.18399E-30

HEAT1 Block Report

```
BLOCK:  HEAT1    MODEL: HEATX
------------------------------
  HOT SIDE:
  ---------
  INLET STREAM:             EXTRACT
  OUTLET STREAM:            COOLEXTR
  PROPERTY OPTION SET:   NRTL      RENON (NRTL) / IDEAL GAS
  COLD SIDE:
  ----------
  INLET STREAM:             S21
  OUTLET STREAM:            S20
  PROPERTY OPTION SET:   NRTL      RENON (NRTL) / IDEAL GAS


                    ***  MASS AND ENERGY BALANCE  ***
                                IN               OUT        RELATIVE DIFF.
 TOTAL BALANCE
    MOLE(KMOL/HR )            4054.03          4054.03          0.00000
    MASS(KG/HR   )            251539.          251539.          0.00000
    ENTHALPY(CAL/SEC )     -0.516555E+08    -0.516555E+08    0.144236E-15

                    ***  CO2 EQUIVALENT SUMMARY ***
```

```
 FEED STREAMS CO2E              392.282      KG/HR
 PRODUCT STREAMS CO2E           392.282      KG/HR
 NET STREAMS CO2E PRODUCTION    0.00000      KG/HR
 UTILITIES CO2E PRODUCTION      0.00000      KG/HR
 TOTAL CO2E PRODUCTION          0.00000      KG/HR

                      ***  INPUT DATA  ***

FLASH SPECS FOR HOT SIDE:
TWO    PHASE      FLASH
MAXIMUM NO. ITERATIONS                                  30
CONVERGENCE TOLERANCE                                    0.000100000

FLASH SPECS FOR COLD SIDE:
TWO    PHASE      FLASH
MAXIMUM NO. ITERATIONS                                  30
CONVERGENCE TOLERANCE                                    0.000100000

FLOW DIRECTION AND SPECIFICATION:
  COUNTERCURRENT   HEAT EXCHANGER
  SPECIFIED HOT OUTLET TEMP
  SPECIFIED VALUE                C                      50.0000
  LMTD CORRECTION FACTOR                                 1.00000

PRESSURE SPECIFICATION:
  HOT  SIDE PRESSURE DROP        BAR                     0.0000
  COLD SIDE PRESSURE DROP        BAR                     0.0000

HEAT TRANSFER COEFFICIENT SPECIFICATION:
  HOT LIQUID    COLD LIQUID      CAL/SEC-SQCM-K          0.0203
  HOT 2-PHASE   COLD LIQUID      CAL/SEC-SQCM-K          0.0203
  HOT VAPOR     COLD LIQUID      CAL/SEC-SQCM-K          0.0203
  HOT LIQUID    COLD 2-PHASE     CAL/SEC-SQCM-K          0.0203
  HOT 2-PHASE   COLD 2-PHASE     CAL/SEC-SQCM-K          0.0203
  HOT VAPOR     COLD 2-PHASE     CAL/SEC-SQCM-K          0.0203
  HOT LIQUID    COLD VAPOR       CAL/SEC-SQCM-K          0.0203
  HOT 2-PHASE   COLD VAPOR       CAL/SEC-SQCM-K          0.0203
  HOT VAPOR     COLD VAPOR       CAL/SEC-SQCM-K          0.0203

                     ***  OVERALL RESULTS  ***

STREAMS:
                 ---------------------------------------
                 |                                     |
EXTRACT    ----->|                HOT                  |-----> COOLEXTR
T=  6.9343D+01   |                                     |       T=  5.0000D+01
P=  1.0000D+00   |                                     |       P=  1.0000D+00
V=  0.0000D+00   |                                     |       V=  5.8387D-04
                 |                                     |
S20        <-----|                COLD                 |<----- S21
T=  5.9096D+01   |                                     |       T=  1.2000D+01
P=  1.0000D+00   |                                     |       P=  1.0000D+00
V=  0.0000D+00   |                                     |       V=  0.0000D+00
                 ---------------------------------------

DUTY AND AREA:
  CALCULATED HEAT DUTY           CAL/SEC             515906.1959
  CALCULATED (REQUIRED) AREA     SQM                    120.4663
  ACTUAL EXCHANGER AREA          SQM                    120.4663
  PER CENT OVER-DESIGN                                    0.0000

HEAT TRANSFER COEFFICIENT:
  AVERAGE COEFFICIENT (DIRTY)    CAL/SEC-SQCM-K           0.0203
  UA (DIRTY)                     CAL/SEC-K            24456.9485

LOG-MEAN TEMPERATURE DIFFERENCE:
  LMTD CORRECTION FACTOR                                  1.0000
  LMTD (CORRECTED)               C                       21.0945
  NUMBER OF SHELLS IN SERIES                               1

PRESSURE DROP:
  HOTSIDE, TOTAL                 BAR                      0.0000
```

```
    COLDSIDE, TOTAL                 BAR                          0.0000

                          ***  ZONE RESULTS  ***

  TEMPERATURE LEAVING EACH ZONE:

                                    HOT
          ------------------------------------------------------------
          |                                                          |
HOT IN    |                           COND                           | HOT OUT
------>   |                                                          |------>
  69.3    |                                                          |   50.0
          |                                                          |
COLDOUT   |                           LIQ                            | COLDIN
<------   |                                                          |<------
  59.1    |                                                          |   12.0
          |                                                          |
          ------------------------------------------------------------
                                    COLD

  ZONE HEAT TRANSFER AND AREA:

  ZONE        HEAT DUTY        AREA        LMTD       AVERAGE U        UA
              CAL/SEC          SQM          C         CAL/SEC-SQCM-K  CAL/SEC-K
    1     515906.196        120.4663      21.0945      0.0203        24456.9485

HEATX COLD-TQCU HEAT1    TQCURV INLET
-------------------------------------
  PRESSURE PROFILE:      CONSTANT2
  PRESSURE DROP:         0.0          BAR
  PROPERTY OPTION SET:   NRTL       RENON (NRTL) / IDEAL GAS

-----------------------------------------------------
!  DUTY       !  PRES       !  TEMP       !  VFRAC     !
!             !             !             !            !
!             !             !             !            !
!             !             !             !            !
!  CAL/SEC    !  BAR        !  C          !            !
!             !             !             !            !
!============!=============!=============!============!
!     0.0     !     1.0000  !    59.0955  !     0.0    !
!  2.4567+04  !     1.0000  !    56.9071  !     0.0    !
!  4.9134+04  !     1.0000  !    54.7127  !     0.0    !
!  7.3701+04  !     1.0000  !    52.5122  !     0.0    !
!  9.8268+04  !     1.0000  !    50.3058  !     0.0    !
!------------+-------------+-------------+------------!
!  1.2283+05  !     1.0000  !    48.0936  !     0.0    !
!  1.4740+05  !     1.0000  !    45.8758  !     0.0    !
!  1.7197+05  !     1.0000  !    43.6523  !     0.0    !
!  1.9654+05  !     1.0000  !    41.4233  !     0.0    !
!  2.2110+05  !     1.0000  !    39.1890  !     0.0    !
!------------+-------------+-------------+------------!
!  2.4567+05  !     1.0000  !    36.9494  !     0.0    !
!  2.7024+05  !     1.0000  !    34.7047  !     0.0    !
!  2.9480+05  !     1.0000  !    32.4549  !     0.0    !
!  3.1937+05  !     1.0000  !    30.2003  !     0.0    !
!  3.4394+05  !     1.0000  !    27.9408  !     0.0    !
!------------+-------------+-------------+------------!
!  3.6850+05  !     1.0000  !    25.6766  !     0.0    !
!  3.9307+05  !     1.0000  !    23.4079  !     0.0    !
!  4.1764+05  !     1.0000  !    21.1347  !     0.0    !
!  4.4221+05  !     1.0000  !    18.8572  !     0.0    !
!  4.6677+05  !     1.0000  !    16.5755  !     0.0    !
!------------+-------------+-------------+------------!
!  4.9134+05  !     1.0000  !    14.2897  !     0.0    !
!  5.1591+05  !     1.0000  !    12.0000  !     0.0    !
-----------------------------------------------------

HEATX HOT-TQCUR HEAT1    TQCURV INLET
-------------------------------------
  PRESSURE PROFILE:      CONSTANT2
  PRESSURE DROP:         0.0          BAR
```

```
  PROPERTY OPTION SET:   NRTL      RENON (NRTL) / IDEAL GAS

-------------------------------------------------
!  DUTY      !  PRES      !  TEMP      !  VFRAC     !
!            !            !            !            !
!            !            !            !            !
!            !            !            !            !
!  CAL/SEC   !  BAR       !  C         !            !
!            !            !            !            !
!============!============!============!============!
!     0.0    !     1.0000 !    69.2428 !  2.0655-03 !
!  2.4567+04 !     1.0000 !    68.3473 !  1.9279-03 !
!  4.9134+04 !     1.0000 !    67.4495 !  1.7983-03 !
!  7.3701+04 !     1.0000 !    66.5495 !  1.6768-03 !
!  9.8268+04 !     1.0000 !    65.6473 !  1.5635-03 !
!-----------+------------+------------+------------!
!  1.2283+05 !     1.0000 !    64.7429 !  1.4583-03 !
!  1.4740+05 !     1.0000 !    63.8362 !  1.3609-03 !
!  1.7197+05 !     1.0000 !    62.9275 !  1.2712-03 !
!  1.9654+05 !     1.0000 !    62.0167 !  1.1887-03 !
!  2.2110+05 !     1.0000 !    61.1037 !  1.1132-03 !
!-----------+------------+------------+------------!
!  2.4567+05 !     1.0000 !    60.1888 !  1.0442-03 !
!  2.7024+05 !     1.0000 !    59.2719 !  9.8111-04 !
!  2.9480+05 !     1.0000 !    58.3530 !  9.2355-04 !
!  3.1937+05 !     1.0000 !    57.4322 !  8.7104-04 !
!  3.4394+05 !     1.0000 !    56.5095 !  8.2312-04 !
!-----------+------------+------------+------------!
!  3.6850+05 !     1.0000 !    55.5850 !  7.7935-04 !
!  3.9307+05 !     1.0000 !    54.6586 !  7.3934-04 !
!  4.1764+05 !     1.0000 !    53.7304 !  7.0271-04 !
!  4.4221+05 !     1.0000 !    52.8005 !  6.6914-04 !
!  4.6677+05 !     1.0000 !    51.8687 !  6.3832-04 !
!-----------+------------+------------+------------!
!  4.9134+05 !     1.0000 !    50.9352 !  6.0998-04 !
!  5.1591+05 !     1.0000 !    50.0000 !  5.8387-04 !
-------------------------------------------------
```

HEAT2 Block Report

```
BLOCK:  HEAT2    MODEL: HEATX
------------------------------
  HOT SIDE:
  ---------
  INLET STREAM:              SOLVREC2
  OUTLET STREAM:             SOLVENT2
  PROPERTY OPTION SET:   NRTL      RENON (NRTL) / IDEAL GAS
  COLD SIDE:
  ----------
  INLET STREAM:              S18
  OUTLET STREAM:             S19
  PROPERTY OPTION SET:   NRTL      RENON (NRTL) / IDEAL GAS

                     ***  MASS AND ENERGY BALANCE  ***
                                  IN               OUT        RELATIVE DIFF.
   TOTAL BALANCE
      MOLE(KMOL/HR )            6769.03          6769.03          0.00000
      MASS(KG/HR   )            292287.          292287.          0.00000
      ENTHALPY(CAL/SEC )     -0.996069E+08    -0.996069E+08    0.149600E-15

                     ***  CO2 EQUIVALENT SUMMARY ***
   FEED STREAMS CO2E             0.00000      KG/HR
   PRODUCT STREAMS CO2E          0.00000      KG/HR
   NET STREAMS CO2E PRODUCTION   0.00000      KG/HR
   UTILITIES CO2E PRODUCTION     0.00000      KG/HR
   TOTAL CO2E PRODUCTION         0.00000      KG/HR

                          ***  INPUT DATA  ***
```

```
FLASH SPECS FOR HOT SIDE:
TWO    PHASE      FLASH
MAXIMUM NO. ITERATIONS                                    30
CONVERGENCE TOLERANCE                                      0.000100000

FLASH SPECS FOR COLD SIDE:
TWO    PHASE      FLASH
MAXIMUM NO. ITERATIONS                                    30
CONVERGENCE TOLERANCE                                      0.000100000

FLOW DIRECTION AND SPECIFICATION:
  COUNTERCURRENT   HEAT EXCHANGER
  SPECIFIED HOT OUTLET TEMP
  SPECIFIED VALUE                C                        25.0000
  LMTD CORRECTION FACTOR                                    1.00000

PRESSURE SPECIFICATION:
  HOT  SIDE PRESSURE DROP        BAR                        0.0000
  COLD SIDE PRESSURE DROP        BAR                        0.0000

HEAT TRANSFER COEFFICIENT SPECIFICATION:
  HOT LIQUID    COLD LIQUID      CAL/SEC-SQCM-K             0.0203
  HOT 2-PHASE   COLD LIQUID      CAL/SEC-SQCM-K             0.0203
  HOT VAPOR     COLD LIQUID      CAL/SEC-SQCM-K             0.0203
  HOT LIQUID    COLD 2-PHASE     CAL/SEC-SQCM-K             0.0203
  HOT 2-PHASE   COLD 2-PHASE     CAL/SEC-SQCM-K             0.0203
  HOT VAPOR     COLD 2-PHASE     CAL/SEC-SQCM-K             0.0203
  HOT LIQUID    COLD VAPOR       CAL/SEC-SQCM-K             0.0203
  HOT 2-PHASE   COLD VAPOR       CAL/SEC-SQCM-K             0.0203
  HOT VAPOR     COLD VAPOR       CAL/SEC-SQCM-K             0.0203

                    ***  OVERALL RESULTS  ***

STREAMS:
                 ---------------------------------------
                 |                                     |
SOLVREC2  ----->|                HOT                  |-----> SOLVENT2
T=  1.9279D+02   |                                     |       T=  2.5000D+01
P=  2.0000D+00   |                                     |       P=  2.0000D+00
V=  0.0000D+00   |                                     |       V=  0.0000D+00
                 |                                     |
S19       <-----|                COLD                 |<----- S18
T=  9.9649D+01   |                                     |       T=  1.2000D+01
P=  1.0000D+00   |                                     |       P=  1.0000D+00
V=  1.6523D-01   |                                     |       V=  0.0000D+00
                 ---------------------------------------

DUTY AND AREA:
  CALCULATED HEAT DUTY           CAL/SEC            4561010.0274
  CALCULATED (REQUIRED) AREA     SQM                   1004.1879
  ACTUAL EXCHANGER AREA          SQM                   1004.1879
  PER CENT OVER-DESIGN                                    0.0000

HEAT TRANSFER COEFFICIENT:
  AVERAGE COEFFICIENT (DIRTY)    CAL/SEC-SQCM-K            0.0203
  UA (DIRTY)                     CAL/SEC-K            203869.2370

LOG-MEAN TEMPERATURE DIFFERENCE:
  LMTD CORRECTION FACTOR                                  1.0000
  LMTD (CORRECTED)               C                       22.3722
  NUMBER OF SHELLS IN SERIES                              1

PRESSURE DROP:
  HOTSIDE, TOTAL                 BAR                       0.0000
  COLDSIDE, TOTAL                BAR                       0.0000

                    ***  ZONE RESULTS  ***

TEMPERATURE LEAVING EACH ZONE:

                                HOT
     ------------------------------------------------------------
```

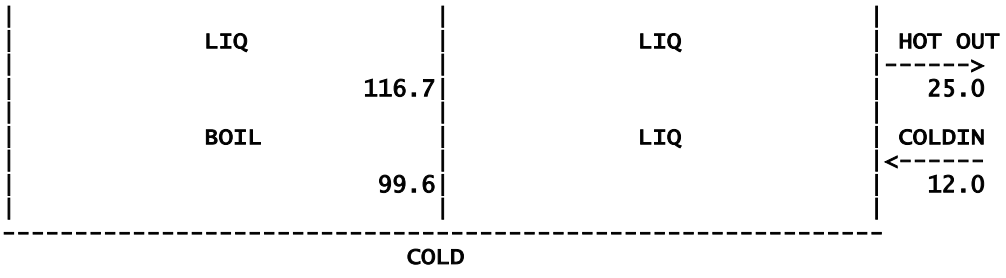

ZONE HEAT TRANSFER AND AREA:

ZONE	HEAT DUTY CAL/SEC	AREA SQM	LMTD C	AVERAGE U CAL/SEC-SQCM-K	UA CAL/SEC-K
1	2276057.489	250.2414	44.8010	0.0203	50803.7563
2	2284952.539	753.9465	14.9279	0.0203	153065.4806

HEATX COLD-TQCU HEAT2 TQCURV INLET

PRESSURE PROFILE: CONSTANT2
PRESSURE DROP: 0.0 BAR
PROPERTY OPTION SET: NRTL RENON (NRTL) / IDEAL GAS

DUTY CAL/SEC	PRES BAR	TEMP C	VFRAC
0.0	1.0000	99.6491	0.1652
2.1719+05	1.0000	99.6491	0.1495
4.3438+05	1.0000	99.6491	0.1337
6.5157+05	1.0000	99.6491	0.1179
8.6876+05	1.0000	99.6491	0.1022
1.0860+06	1.0000	99.6491	8.6396-02
1.3031+06	1.0000	99.6491	7.0629-02
1.5203+06	1.0000	99.6491	5.4862-02
1.7375+06	1.0000	99.6491	3.9095-02
1.9547+06	1.0000	99.6491	2.3328-02
2.1719+06	1.0000	99.6491	7.5606-03
2.2761+06	1.0000	99.6491	BUB>0.0
2.3891+06	1.0000	95.5616	0.0
2.6063+06	1.0000	87.6253	0.0
2.8235+06	1.0000	79.5831	0.0
3.0407+06	1.0000	71.4389	0.0
3.2579+06	1.0000	63.1972	0.0
3.4751+06	1.0000	54.8628	0.0
3.6922+06	1.0000	46.4411	0.0
3.9094+06	1.0000	37.9377	0.0
4.1266+06	1.0000	29.3588	0.0
4.3438+06	1.0000	20.7106	0.0
4.5610+06	1.0000	12.0000	0.0

HEATX HOT-TQCUR HEAT2 TQCURV INLET

PRESSURE PROFILE: CONSTANT2
PRESSURE DROP: 0.0 BAR
PROPERTY OPTION SET: NRTL RENON (NRTL) / IDEAL GAS

DUTY	PRES	TEMP	VFRAC

CAL/SEC	BAR	C	
0.0	2.0000	192.7891	0.0
2.1719+05	2.0000	186.0924	0.0
4.3438+05	2.0000	179.2833	0.0
6.5157+05	2.0000	172.3598	0.0
8.6876+05	2.0000	165.3195	0.0
1.0860+06	2.0000	158.1599	0.0
1.3031+06	2.0000	150.8785	0.0
1.5203+06	2.0000	143.4723	0.0
1.7375+06	2.0000	135.9385	0.0
1.9547+06	2.0000	128.2738	0.0
2.1719+06	2.0000	120.4750	0.0
2.2761+06	2.0000	116.6868	0.0
2.3891+06	2.0000	112.5389	0.0
2.6063+06	2.0000	104.4621	0.0
2.8235+06	2.0000	96.2413	0.0
3.0407+06	2.0000	87.8734	0.0
3.2579+06	2.0000	79.3554	0.0
3.4751+06	2.0000	70.6846	0.0
3.6922+06	2.0000	61.8591	0.0
3.9094+06	2.0000	52.8776	0.0
4.1266+06	2.0000	43.7397	0.0
4.3438+06	2.0000	34.4463	0.0
4.5610+06	2.0000	25.0000	0.0

HEAT3 Block Report

```
BLOCK:  HEAT3    MODEL: HEATX
------------------------------
  HOT SIDE:
  ---------
  INLET STREAM:              AEBW
  OUTLET STREAM:             S-AEBW2
  PROPERTY OPTION SET:   NRTL      RENON (NRTL) / IDEAL GAS
  COLD SIDE:
  ----------
  INLET STREAM:              S17
  OUTLET STREAM:             S16
  PROPERTY OPTION SET:   NRTL      RENON (NRTL) / IDEAL GAS

                     ***  MASS AND ENERGY BALANCE  ***
                                  IN               OUT        RELATIVE DIFF.
   TOTAL BALANCE
      MOLE(KMOL/HR )            675.750          675.750         0.00000
      MASS(KG/HR   )            20098.0          20098.0         0.00000
      ENTHALPY(CAL/SEC )     -0.130559E+08    -0.130559E+08     0.00000

                     ***  CO2 EQUIVALENT SUMMARY ***
   FEED STREAMS CO2E             103.492      KG/HR
   PRODUCT STREAMS CO2E          103.492      KG/HR
   NET STREAMS CO2E PRODUCTION   0.00000      KG/HR
   UTILITIES CO2E PRODUCTION     0.00000      KG/HR
   TOTAL CO2E PRODUCTION         0.00000      KG/HR

                         ***  INPUT DATA  ***

  FLASH SPECS FOR HOT SIDE:
  TWO    PHASE      FLASH
  MAXIMUM NO. ITERATIONS                                    30
  CONVERGENCE TOLERANCE                                      0.000100000
```

```
FLASH SPECS FOR COLD SIDE:
TWO    PHASE      FLASH
MAXIMUM NO. ITERATIONS                                    30
CONVERGENCE TOLERANCE                                      0.000100000

FLOW DIRECTION AND SPECIFICATION:
  COUNTERCURRENT   HEAT EXCHANGER
  SPECIFIED HOT OUTLET TEMP
  SPECIFIED VALUE                C                        30.0000
  LMTD CORRECTION FACTOR                                   1.00000

PRESSURE SPECIFICATION:
  HOT  SIDE PRESSURE DROP        BAR                       0.0000
  COLD SIDE PRESSURE DROP        BAR                       0.0000

HEAT TRANSFER COEFFICIENT SPECIFICATION:
  HOT LIQUID    COLD LIQUID      CAL/SEC-SQCM-K            0.0203
  HOT 2-PHASE   COLD LIQUID      CAL/SEC-SQCM-K            0.0203
  HOT VAPOR     COLD LIQUID      CAL/SEC-SQCM-K            0.0203
  HOT LIQUID    COLD 2-PHASE     CAL/SEC-SQCM-K            0.0203
  HOT 2-PHASE   COLD 2-PHASE     CAL/SEC-SQCM-K            0.0203
  HOT VAPOR     COLD 2-PHASE     CAL/SEC-SQCM-K            0.0203
  HOT LIQUID    COLD VAPOR       CAL/SEC-SQCM-K            0.0203
  HOT 2-PHASE   COLD VAPOR       CAL/SEC-SQCM-K            0.0203
  HOT VAPOR     COLD VAPOR       CAL/SEC-SQCM-K            0.0203

                     ***  OVERALL RESULTS  ***

STREAMS:
                 ------------------------------------
                 |                                  |
AEBW      ----->|                HOT               |-----> S-AEBW2
T=  6.3252D+01  |                                  |       T=  3.0000D+01
P=  2.0000D+00  |                                  |       P=  2.0000D+00
V=  0.0000D+00  |                                  |       V=  0.0000D+00
                 |                                  |
S16       <-----|                COLD              |<----- S17
T=  5.2600D+01  |                                  |       T=  1.2000D+01
P=  1.0000D+00  |                                  |       P=  1.0000D+00
V=  0.0000D+00  |                                  |       V=  0.0000D+00
                 ------------------------------------

DUTY AND AREA:
  CALCULATED HEAT DUTY           CAL/SEC            100724.3659
  CALCULATED (REQUIRED) AREA     SQM                    35.4242
  ACTUAL EXCHANGER AREA          SQM                    35.4242
  PER CENT OVER-DESIGN                                    0.0000

HEAT TRANSFER COEFFICIENT:
  AVERAGE COEFFICIENT (DIRTY)    CAL/SEC-SQCM-K          0.0203
  UA (DIRTY)                     CAL/SEC-K            7191.7839

LOG-MEAN TEMPERATURE DIFFERENCE:
  LMTD CORRECTION FACTOR                                  1.0000
  LMTD (CORRECTED)               C                       14.0055
  NUMBER OF SHELLS IN SERIES                                1

PRESSURE DROP:
  HOTSIDE, TOTAL                 BAR                       0.0000
  COLDSIDE, TOTAL                BAR                       0.0000

                     ***  ZONE RESULTS  ***

TEMPERATURE LEAVING EACH ZONE:

                                  HOT
       ------------------------------------------------------------
       |                            |                            |
HOT IN |            COND            |            LIQ             | HOT OUT
------> |                            |                            |------>
  63.3 |                        63.2|                            |   30.0
       |                            |                            |
```

```
COLDOUT |              LIQ              |              LIQ              | COLDIN
<------ |                               |                               |<------
  52.6  |                          52.5 |                               |   12.0
        |                               |                               |
        ---------------------------------------------------------------
                                      COLD
```

ZONE HEAT TRANSFER AND AREA:

ZONE	HEAT DUTY CAL/SEC	AREA SQM	LMTD C	AVERAGE U CAL/SEC-SQCM-K	UA CAL/SEC-K
1	141.531	0.0654	10.6563	0.0203	13.2814
2	100582.835	35.3588	14.0117	0.0203	7178.5025

HEATX COLD-TQCU HEAT3 TQCURV INLET

PRESSURE PROFILE: CONSTANT2
PRESSURE DROP: 0.0 BAR
PROPERTY OPTION SET: NRTL RENON (NRTL) / IDEAL GAS

DUTY CAL/SEC	PRES BAR	TEMP C	VFRAC
0.0	1.0000	52.6003	0.0
141.5311	1.0000	52.5444	0.0
4796.3984	1.0000	50.7054	0.0
9592.7967	1.0000	48.8063	0.0
1.4389+04	1.0000	46.9030	0.0
1.9186+04	1.0000	44.9954	0.0
2.3982+04	1.0000	43.0838	0.0
2.8778+04	1.0000	41.1682	0.0
3.3575+04	1.0000	39.2486	0.0
3.8371+04	1.0000	37.3252	0.0
4.3168+04	1.0000	35.3979	0.0
4.7964+04	1.0000	33.4668	0.0
5.2760+04	1.0000	31.5322	0.0
5.7557+04	1.0000	29.5939	0.0
6.2353+04	1.0000	27.6520	0.0
6.7150+04	1.0000	25.7068	0.0
7.1946+04	1.0000	23.7582	0.0
7.6742+04	1.0000	21.8062	0.0
8.1539+04	1.0000	19.8511	0.0
8.6335+04	1.0000	17.8928	0.0
9.1132+04	1.0000	15.9315	0.0
9.5928+04	1.0000	13.9672	0.0
1.0072+05	1.0000	12.0000	0.0

HEATX HOT-TQCUR HEAT3 TQCURV INLET

PRESSURE PROFILE: CONSTANT2
PRESSURE DROP: 0.0 BAR
PROPERTY OPTION SET: NRTL RENON (NRTL) / IDEAL GAS

DUTY CAL/SEC	PRES BAR	TEMP C	VFRAC
0.0	2.0000	63.2518	3.5816-06

```
!   141.5311 !     2.0000 !    63.2055 ! BUB>0.0    !
!  4796.3984 !     2.0000 !    61.6781 !     0.0    !
!  9592.7967 !     2.0000 !    60.1021 !     0.0    !
!  1.4389+04 !     2.0000 !    58.5243 !     0.0    !
!------------+------------+------------+------------!
!  1.9186+04 !     2.0000 !    56.9444 !     0.0    !
!  2.3982+04 !     2.0000 !    55.3627 !     0.0    !
!  2.8778+04 !     2.0000 !    53.7792 !     0.0    !
!  3.3575+04 !     2.0000 !    52.1939 !     0.0    !
!  3.8371+04 !     2.0000 !    50.6069 !     0.0    !
!------------+------------+------------+------------!
!  4.3168+04 !     2.0000 !    49.0182 !     0.0    !
!  4.7964+04 !     2.0000 !    47.4280 !     0.0    !
!  5.2760+04 !     2.0000 !    45.8363 !     0.0    !
!  5.7557+04 !     2.0000 !    44.2432 !     0.0    !
!  6.2353+04 !     2.0000 !    42.6488 !     0.0    !
!------------+------------+------------+------------!
!  6.7150+04 !     2.0000 !    41.0532 !     0.0    !
!  7.1946+04 !     2.0000 !    39.4565 !     0.0    !
!  7.6742+04 !     2.0000 !    37.8588 !     0.0    !
!  8.1539+04 !     2.0000 !    36.2602 !     0.0    !
!  8.6335+04 !     2.0000 !    34.6608 !     0.0    !
!------------+------------+------------+------------!
!  9.1132+04 !     2.0000 !    33.0609 !     0.0    !
!  9.5928+04 !     2.0000 !    31.4604 !     0.0    !
!  1.0072+05 !     2.0000 !    30.0000 !     0.0    !
-------------------------------------------------------
```

HEAT4 Block Report

```
BLOCK:  HEAT4    MODEL: HEATX
------------------------------
  HOT SIDE:
  ---------
  INLET STREAM:              S-AEW
  OUTLET STREAM:             S22
  PROPERTY OPTION SET:   NRTL      RENON (NRTL) / IDEAL GAS
  COLD SIDE:
  ----------
  INLET STREAM:              S24
  OUTLET STREAM:             S23
  PROPERTY OPTION SET:   NRTL      RENON (NRTL) / IDEAL GAS

                     ***  MASS AND ENERGY BALANCE  ***
                                  IN               OUT        RELATIVE DIFF.
   TOTAL BALANCE
      MOLE(KMOL/HR )            191.250          191.250          0.00000
      MASS(KG/HR   )            4835.54          4835.54          0.00000
      ENTHALPY(CAL/SEC )     -0.357509E+07    -0.357509E+07    -0.130252E-15

                     ***  CO2 EQUIVALENT SUMMARY ***
   FEED STREAMS CO2E            17.0600      KG/HR
   PRODUCT STREAMS CO2E         17.0600      KG/HR
   NET STREAMS CO2E PRODUCTION  0.00000      KG/HR
   UTILITIES CO2E PRODUCTION    0.00000      KG/HR
   TOTAL CO2E PRODUCTION        0.00000      KG/HR

                         ***  INPUT DATA  ***

  FLASH SPECS FOR HOT SIDE:
  TWO    PHASE      FLASH
  MAXIMUM NO. ITERATIONS                                    30
  CONVERGENCE TOLERANCE                                      0.000100000

  FLASH SPECS FOR COLD SIDE:
  TWO    PHASE      FLASH
  MAXIMUM NO. ITERATIONS                                    30
  CONVERGENCE TOLERANCE                                      0.000100000
```

```
FLOW DIRECTION AND SPECIFICATION:
  COUNTERCURRENT   HEAT EXCHANGER
  SPECIFIED HOT OUTLET TEMP
  SPECIFIED VALUE                C                        30.0000
  LMTD CORRECTION FACTOR                                   1.00000

PRESSURE SPECIFICATION:
  HOT  SIDE PRESSURE DROP        BAR                       0.0000
  COLD SIDE PRESSURE DROP        BAR                       0.0000

HEAT TRANSFER COEFFICIENT SPECIFICATION:
  HOT LIQUID    COLD LIQUID      CAL/SEC-SQCM-K            0.0203
  HOT 2-PHASE   COLD LIQUID      CAL/SEC-SQCM-K            0.0203
  HOT VAPOR     COLD LIQUID      CAL/SEC-SQCM-K            0.0203
  HOT LIQUID    COLD 2-PHASE     CAL/SEC-SQCM-K            0.0203
  HOT 2-PHASE   COLD 2-PHASE     CAL/SEC-SQCM-K            0.0203
  HOT VAPOR     COLD 2-PHASE     CAL/SEC-SQCM-K            0.0203
  HOT LIQUID    COLD VAPOR       CAL/SEC-SQCM-K            0.0203
  HOT 2-PHASE   COLD VAPOR       CAL/SEC-SQCM-K            0.0203
  HOT VAPOR     COLD VAPOR       CAL/SEC-SQCM-K            0.0203

                    ***  OVERALL RESULTS  ***

STREAMS:
                 ------------------------------------
                 |                                  |
S-AEW     ----->|                HOT               |-----> S22
T=  7.2023D+01  |                                  |       T=  3.0000D+01
P=  2.0000D+00  |                                  |       P=  2.0000D+00
V=  0.0000D+00  |                                  |       V=  0.0000D+00
                 |                                  |
S23       <-----|                COLD              |<----- S24
T=  5.9186D+01  |                                  |       T=  1.2000D+01
P=  1.0000D+00  |                                  |       P=  1.0000D+00
V=  0.0000D+00  |                                  |       V=  0.0000D+00
                 ------------------------------------

DUTY AND AREA:
  CALCULATED HEAT DUTY           CAL/SEC             31720.5313
  CALCULATED (REQUIRED) AREA     SQM                    10.2301
  ACTUAL EXCHANGER AREA          SQM                    10.2301
  PER CENT OVER-DESIGN                                   0.0000

HEAT TRANSFER COEFFICIENT:
  AVERAGE COEFFICIENT (DIRTY)    CAL/SEC-SQCM-K          0.0203
  UA (DIRTY)                     CAL/SEC-K            2076.8977

LOG-MEAN TEMPERATURE DIFFERENCE:
  LMTD CORRECTION FACTOR                                 1.0000
  LMTD (CORRECTED)               C                      15.2730
  NUMBER OF SHELLS IN SERIES                              1

PRESSURE DROP:
  HOTSIDE, TOTAL                 BAR                     0.0000
  COLDSIDE, TOTAL                BAR                     0.0000

                    ***  ZONE RESULTS  ***

TEMPERATURE LEAVING EACH ZONE:

                                HOT
        ------------------------------------------------------------
        |                                                          |
HOT IN  |                         LIQ                              | HOT OUT
------> |                                                          |------>
  72.0  |                                                          |   30.0
        |                                                          |
COLDOUT |                         LIQ                              | COLDIN
<------ |                                                          |<------
  59.2  |                                                          |   12.0
        |                                                          |
```

COLD

ZONE HEAT TRANSFER AND AREA:

ZONE	HEAT DUTY CAL/SEC	AREA SQM	LMTD C	AVERAGE U CAL/SEC-SQCM-K	UA CAL/SEC-K
1	31720.531	10.2301	15.2730	0.0203	2076.8977

HEATX COLD-TQCU HEAT4 TQCURV INLET

PRESSURE PROFILE: CONSTANT2
PRESSURE DROP: 0.0 BAR
PROPERTY OPTION SET: NRTL RENON (NRTL) / IDEAL GAS

DUTY CAL/SEC	PRES BAR	TEMP C	VFRAC
0.0	1.0000	59.1863	0.0
1510.5015	1.0000	56.9939	0.0
3021.0030	1.0000	56.9939	0.0
4531.5045	1.0000	54.7953	0.0
6042.0060	1.0000	52.5907	0.0
7552.5074	1.0000	50.3801	0.0
9063.0089	1.0000	48.1638	0.0
1.0574+04	1.0000	45.9417	0.0
1.2084+04	1.0000	43.7140	0.0
1.3595+04	1.0000	41.4808	0.0
1.5105+04	1.0000	39.2421	0.0
1.6616+04	1.0000	36.9983	0.0
1.8126+04	1.0000	34.7492	0.0
1.9637+04	1.0000	32.4951	0.0
2.1147+04	1.0000	30.2360	0.0
2.2658+04	1.0000	27.9721	0.0
2.4168+04	1.0000	25.7035	0.0
2.5679+04	1.0000	23.4303	0.0
2.7189+04	1.0000	21.1527	0.0
2.8700+04	1.0000	18.8707	0.0
3.0210+04	1.0000	16.5845	0.0
3.1721+04	1.0000	14.2942	0.0

HEATX HOT-TQCUR HEAT4 TQCURV INLET

PRESSURE PROFILE: CONSTANT2
PRESSURE DROP: 0.0 BAR
PROPERTY OPTION SET: NRTL RENON (NRTL) / IDEAL GAS

DUTY CAL/SEC	PRES BAR	TEMP C	VFRAC
0.0	2.0000	72.0228	1.2197-06
1510.5015	2.0000	69.8638	0.0
3021.0030	2.0000	67.7179	0.0
4531.5045	2.0000	65.5859	0.0
6042.0060	2.0000	63.4681	0.0
7552.5074	2.0000	61.3651	0.0

```
!  9063.0089 !     2.0000 !    59.2770 !     0.0    !
!  1.0574+04 !     2.0000 !    57.2045 !     0.0    !
!  1.2084+04 !     2.0000 !    55.1476 !     0.0    !
!  1.3595+04 !     2.0000 !    53.1067 !     0.0    !
!------------+------------+------------+------------!
!  1.5105+04 !     2.0000 !    51.0821 !     0.0    !
!  1.6616+04 !     2.0000 !    49.0739 !     0.0    !
!  1.8126+04 !     2.0000 !    47.0822 !     0.0    !
!  1.9637+04 !     2.0000 !    45.1074 !     0.0    !
!  2.1147+04 !     2.0000 !    43.1493 !     0.0    !
!------------+------------+------------+------------!
!  2.2658+04 !     2.0000 !    41.2081 !     0.0    !
!  2.4168+04 !     2.0000 !    39.2839 !     0.0    !
!  2.5679+04 !     2.0000 !    37.3766 !     0.0    !
!  2.7189+04 !     2.0000 !    35.4862 !     0.0    !
!  2.8700+04 !     2.0000 !    33.6127 !     0.0    !
!------------+------------+------------+------------!
!  3.0210+04 !     2.0000 !    31.7560 !     0.0    !
!  3.1721+04 !     2.0000 !    30.0000 !     0.0    !
-------------------------------------------------------
```

HEAT5 Block Report

```
BLOCK:  HEAT5    MODEL: HEATX
------------------------------
  HOT SIDE:
  ---------
  INLET STREAM:             BUTANOL
  OUTLET STREAM:            BUTPROD
  PROPERTY OPTION SET:   NRTL      RENON (NRTL) / IDEAL GAS
  COLD SIDE:
  ----------
  INLET STREAM:             S25
  OUTLET STREAM:            S26
  PROPERTY OPTION SET:   NRTL      RENON (NRTL) / IDEAL GAS

                     ***  MASS AND ENERGY BALANCE  ***
                                  IN               OUT        RELATIVE DIFF.
   TOTAL BALANCE
      MOLE(KMOL/HR )            408.250          408.250         0.00000
      MASS(KG/HR   )            13700.5          13700.5        0.132768E-15
      ENTHALPY(CAL/SEC )     -0.788288E+07    -0.788288E+07    0.118145E-15

                     ***  CO2 EQUIVALENT SUMMARY ***
   FEED STREAMS CO2E            0.00000      KG/HR
   PRODUCT STREAMS CO2E         0.00000      KG/HR
   NET STREAMS CO2E PRODUCTION  0.00000      KG/HR
   UTILITIES CO2E PRODUCTION    0.00000      KG/HR
   TOTAL CO2E PRODUCTION        0.00000      KG/HR

                         ***  INPUT DATA  ***

  FLASH SPECS FOR HOT SIDE:
  TWO    PHASE      FLASH
  MAXIMUM NO. ITERATIONS                                  30
  CONVERGENCE TOLERANCE                                    0.000100000

  FLASH SPECS FOR COLD SIDE:
  TWO    PHASE      FLASH
  MAXIMUM NO. ITERATIONS                                  30
  CONVERGENCE TOLERANCE                                    0.000100000

  FLOW DIRECTION AND SPECIFICATION:
    COUNTERCURRENT   HEAT EXCHANGER
    SPECIFIED HOT OUTLET TEMP
    SPECIFIED VALUE               C                      25.0000
    LMTD CORRECTION FACTOR                                1.00000
```

```
PRESSURE SPECIFICATION:
  HOT  SIDE PRESSURE DROP        BAR                        0.0000
  COLD SIDE PRESSURE DROP        BAR                        0.0000

HEAT TRANSFER COEFFICIENT SPECIFICATION:
  HOT LIQUID    COLD LIQUID      CAL/SEC-SQCM-K             0.0203
  HOT 2-PHASE   COLD LIQUID      CAL/SEC-SQCM-K             0.0203
  HOT VAPOR     COLD LIQUID      CAL/SEC-SQCM-K             0.0203
  HOT LIQUID    COLD 2-PHASE     CAL/SEC-SQCM-K             0.0203
  HOT 2-PHASE   COLD 2-PHASE     CAL/SEC-SQCM-K             0.0203
  HOT VAPOR     COLD 2-PHASE     CAL/SEC-SQCM-K             0.0203
  HOT LIQUID    COLD VAPOR       CAL/SEC-SQCM-K             0.0203
  HOT 2-PHASE   COLD VAPOR       CAL/SEC-SQCM-K             0.0203
  HOT VAPOR     COLD VAPOR       CAL/SEC-SQCM-K             0.0203

                    ***  OVERALL RESULTS  ***

STREAMS:
                 ------------------------------------
                 |                                  |
BUTANOL   ----->|                HOT               |-----> BUTPROD
T=  1.3840D+02  |                                  |       T=  2.5000D+01
P=  2.0000D+00  |                                  |       P=  2.0000D+00
V=  0.0000D+00  |                                  |       V=  0.0000D+00
                |                                  |
S26       <-----|                COLD              |<----- S25
T=  9.9649D+01  |                                  |       T=  1.2000D+01
P=  1.0000D+00  |                                  |       P=  1.0000D+00
V=  9.0091D-02  |                                  |       V=  0.0000D+00
                 ------------------------------------

DUTY AND AREA:
  CALCULATED HEAT DUTY           CAL/SEC            203952.8565
  CALCULATED (REQUIRED) AREA     SQM                    95.0683
  ACTUAL EXCHANGER AREA          SQM                    95.0683
  PER CENT OVER-DESIGN                                   0.0000

HEAT TRANSFER COEFFICIENT:
  AVERAGE COEFFICIENT (DIRTY)    CAL/SEC-SQCM-K          0.0203
  UA (DIRTY)                     CAL/SEC-K           19300.6634

LOG-MEAN TEMPERATURE DIFFERENCE:
  LMTD CORRECTION FACTOR                                 1.0000
  LMTD (CORRECTED)               C                      10.5671
  NUMBER OF SHELLS IN SERIES                              1

PRESSURE DROP:
  HOTSIDE, TOTAL                 BAR                     0.0000
  COLDSIDE, TOTAL                BAR                     0.0000

                    ***  ZONE RESULTS  ***

TEMPERATURE LEAVING EACH ZONE:

                                 HOT
        ------------------------------------------------------------
        |                           |                             |
HOT IN  |            LIQ            |            LIQ              | HOT OUT
------> |                           |                             |------>
 138.4  |                       101.6|                             |   25.0
        |                           |                             |
COLDOUT |            BOIL           |            LIQ              | COLDIN
<------ |                           |                             |<------
  99.6  |                        99.6|                             |   12.0
        |                           |                             |
        ------------------------------------------------------------
                                 COLD

ZONE HEAT TRANSFER AND AREA:

ZONE       HEAT DUTY       AREA       LMTD       AVERAGE U       UA
           CAL/SEC         SQM         C         CAL/SEC-SQCM-K  CAL/SEC-K
```

```
    1      71784.033        20.6959      17.0847     0.0203        4201.6622
    2     132168.823        74.3724       8.7535     0.0203       15099.0012

HEATX COLD-TQCU HEAT5    TQCURV INLET
------------------------------------
  PRESSURE PROFILE:      CONSTANT2
  PRESSURE DROP:         0.0          BAR
  PROPERTY OPTION SET:   NRTL       RENON (NRTL) / IDEAL GAS

-------------------------------------------------
!  DUTY      !  PRES      !  TEMP      !  VFRAC     !
!            !            !            !            !
!            !            !            !            !
!            !            !            !            !
!  CAL/SEC   !  BAR       !  C         !            !
!            !            !            !            !
!============!============!============!============!
!     0.0    !     1.0000 !    99.6491 !  9.0091-02 !
!  9712.0408 !     1.0000 !    99.6491 !  7.7902-02 !
!  1.9424+04 !     1.0000 !    99.6491 !  6.5714-02 !
!  2.9136+04 !     1.0000 !    99.6491 !  5.3525-02 !
!  3.8848+04 !     1.0000 !    99.6491 !  4.1336-02 !
!-----------+------------+------------+------------!
!  4.8560+04 !     1.0000 !    99.6491 !  2.9147-02 !
!  5.8272+04 !     1.0000 !    99.6491 !  1.6958-02 !
!  6.7984+04 !     1.0000 !    99.6491 !  4.7688-03 !
!  7.1784+04 !     1.0000 !    99.6491 ! BUB>0.0    !
!  7.7696+04 !     1.0000 !    95.9545 !     0.0    !
!-----------+------------+------------+------------!
!  8.7408+04 !     1.0000 !    89.8328 !     0.0    !
!  9.7120+04 !     1.0000 !    83.6472 !     0.0    !
!  1.0683+05 !     1.0000 !    77.3994 !     0.0    !
!  1.1654+05 !     1.0000 !    71.0914 !     0.0    !
!  1.2626+05 !     1.0000 !    64.7252 !     0.0    !
!-----------+------------+------------+------------!
!  1.3597+05 !     1.0000 !    58.3030 !     0.0    !
!  1.4568+05 !     1.0000 !    51.8273 !     0.0    !
!  1.5539+05 !     1.0000 !    45.3006 !     0.0    !
!  1.6510+05 !     1.0000 !    38.7256 !     0.0    !
!  1.7482+05 !     1.0000 !    32.1050 !     0.0    !
!-----------+------------+------------+------------!
!  1.8453+05 !     1.0000 !    25.4418 !     0.0    !
!  1.9424+05 !     1.0000 !    18.7391 !     0.0    !
!  2.0395+05 !     1.0000 !    12.0000 !     0.0    !
-------------------------------------------------

HEATX HOT-TQCUR HEAT5    TQCURV INLET
------------------------------------
  PRESSURE PROFILE:      CONSTANT2
  PRESSURE DROP:         0.0          BAR
  PROPERTY OPTION SET:   NRTL       RENON (NRTL) / IDEAL GAS

-------------------------------------------------
!  DUTY      !  PRES      !  TEMP      !  VFRAC     !
!            !            !            !            !
!            !            !            !            !
!            !            !            !            !
!  CAL/SEC   !  BAR       !  C         !            !
!            !            !            !            !
!============!============!============!============!
!     0.0    !     2.0000 !   138.3978 !     0.0    !
!  9712.0408 !     2.0000 !   133.5907 !     0.0    !
!  1.9424+04 !     2.0000 !   128.7329 !     0.0    !
!  2.9136+04 !     2.0000 !   123.8237 !     0.0    !
!  3.8848+04 !     2.0000 !   118.8623 !     0.0    !
!-----------+------------+------------+------------!
!  4.8560+04 !     2.0000 !   113.8477 !     0.0    !
!  5.8272+04 !     2.0000 !   108.7788 !     0.0    !
!  6.7984+04 !     2.0000 !   103.6545 !     0.0    !
!  7.1784+04 !     2.0000 !   101.6342 !     0.0    !
!  7.7696+04 !     2.0000 !    98.4732 !     0.0    !
!-----------+------------+------------+------------!
```

```
!  8.7408+04 !     2.0000 !    93.2336 !     0.0    !
!  9.7120+04 !     2.0000 !    87.9339 !     0.0    !
!  1.0683+05 !     2.0000 !    82.5722 !     0.0    !
!  1.1654+05 !     2.0000 !    77.1466 !     0.0    !
!  1.2626+05 !     2.0000 !    71.6548 !     0.0    !
!------------+------------+------------+------------!
!  1.3597+05 !     2.0000 !    66.0944 !     0.0    !
!  1.4568+05 !     2.0000 !    60.4627 !     0.0    !
!  1.5539+05 !     2.0000 !    54.7570 !     0.0    !
!  1.6510+05 !     2.0000 !    48.9741 !     0.0    !
!  1.7482+05 !     2.0000 !    43.1107 !     0.0    !
!------------+------------+------------+------------!
!  1.8453+05 !     2.0000 !    37.1631 !     0.0    !
!  1.9424+05 !     2.0000 !    31.1276 !     0.0    !
!  2.0395+05 !     2.0000 !    25.0000 !     0.0    !
 ----------------------------------------------------
```

HEAT6 Block Report

```
BLOCK:  HEAT6    MODEL: HEATX
------------------------------
  HOT SIDE:
  ---------
  INLET STREAM:             ACETONE2
  OUTLET STREAM:            ACEPROD
  PROPERTY OPTION SET:   NRTL      RENON (NRTL) / IDEAL GAS
  COLD SIDE:
  ----------
  INLET STREAM:             S28
  OUTLET STREAM:            S27
  PROPERTY OPTION SET:   NRTL      RENON (NRTL) / IDEAL GAS

                     ***  MASS AND ENERGY BALANCE  ***
                                  IN               OUT        RELATIVE DIFF.
   TOTAL BALANCE
      MOLE(KMOL/HR )            48.0000          48.0000          0.00000
      MASS(KG/HR   )            1540.02          1540.02         0.147644E-15
      ENTHALPY(CAL/SEC )       -866561.         -866561.        -0.134342E-15

                     ***  CO2 EQUIVALENT SUMMARY ***
   FEED STREAMS CO2E             2.11177      KG/HR
   PRODUCT STREAMS CO2E          2.11177      KG/HR
   NET STREAMS CO2E PRODUCTION   0.00000      KG/HR
   UTILITIES CO2E PRODUCTION     0.00000      KG/HR
   TOTAL CO2E PRODUCTION         0.00000      KG/HR

                         ***  INPUT DATA  ***

  FLASH SPECS FOR HOT SIDE:
  TWO    PHASE      FLASH
  MAXIMUM NO. ITERATIONS                                    30
  CONVERGENCE TOLERANCE                                      0.000100000

  FLASH SPECS FOR COLD SIDE:
  TWO    PHASE      FLASH
  MAXIMUM NO. ITERATIONS                                    30
  CONVERGENCE TOLERANCE                                      0.000100000

  FLOW DIRECTION AND SPECIFICATION:
    COUNTERCURRENT   HEAT EXCHANGER
    SPECIFIED HOT OUTLET TEMP
    SPECIFIED VALUE                C                        25.0000
    LMTD CORRECTION FACTOR                                    1.00000

  PRESSURE SPECIFICATION:
    HOT  SIDE PRESSURE DROP        BAR                        0.0000
    COLD SIDE PRESSURE DROP        BAR                        0.0000

  HEAT TRANSFER COEFFICIENT SPECIFICATION:
```

```
   HOT LIQUID    COLD LIQUID      CAL/SEC-SQCM-K          0.0203
   HOT 2-PHASE   COLD LIQUID      CAL/SEC-SQCM-K          0.0203
   HOT VAPOR     COLD LIQUID      CAL/SEC-SQCM-K          0.0203
   HOT LIQUID    COLD 2-PHASE     CAL/SEC-SQCM-K          0.0203
   HOT 2-PHASE   COLD 2-PHASE     CAL/SEC-SQCM-K          0.0203
   HOT VAPOR     COLD 2-PHASE     CAL/SEC-SQCM-K          0.0203
   HOT LIQUID    COLD VAPOR       CAL/SEC-SQCM-K          0.0203
   HOT 2-PHASE   COLD VAPOR       CAL/SEC-SQCM-K          0.0203
   HOT VAPOR     COLD VAPOR       CAL/SEC-SQCM-K          0.0203

                      ***  OVERALL RESULTS  ***

  STREAMS:
                  -------------------------------------
                  |                                   |
  ACETONE2  ----->|                HOT                |-----> ACEPROD
  T=  4.8057D+01  |                                   |       T=  2.5000D+01
  P=  1.0000D+00  |                                   |       P=  1.0000D+00
  V=  0.0000D+00  |                                   |       V=  0.0000D+00
                  |                                   |
  S27       <-----|                COLD               |<----- S28
  T=  3.5060D+01  |                                   |       T=  1.2000D+01
  P=  1.0000D+00  |                                   |       P=  1.0000D+00
  V=  0.0000D+00  |                                   |       V=  0.0000D+00
                  -------------------------------------

  DUTY AND AREA:
    CALCULATED HEAT DUTY           CAL/SEC              3403.0005
    CALCULATED (REQUIRED) AREA     SQM                     1.2895
    ACTUAL EXCHANGER AREA          SQM                     1.2895
    PER CENT OVER-DESIGN                                   0.0000

  HEAT TRANSFER COEFFICIENT:
    AVERAGE COEFFICIENT (DIRTY)    CAL/SEC-SQCM-K          0.0203
    UA (DIRTY)                     CAL/SEC-K             261.8005

  LOG-MEAN TEMPERATURE DIFFERENCE:
    LMTD CORRECTION FACTOR                                 1.0000
    LMTD (CORRECTED)               C                      12.9984
    NUMBER OF SHELLS IN SERIES                              1

  PRESSURE DROP:
    HOTSIDE, TOTAL                 BAR                     0.0000
    COLDSIDE, TOTAL                BAR                     0.0000

                      ***  ZONE RESULTS  ***

  TEMPERATURE LEAVING EACH ZONE:

                                  HOT
        ------------------------------------------------------------
        |                           |                            |
HOT IN  |            COND           |            LIQ             | HOT OUT
------> |                           |                            |------>
  48.1  |                       48.1|                            |   25.0
        |                           |                            |
COLDOUT |            LIQ            |            LIQ             | COLDIN
<------ |                           |                            |<------
  35.1  |                       35.1|                            |   12.0
        |                           |                            |
        ------------------------------------------------------------
                                  COLD

  ZONE HEAT TRANSFER AND AREA:

  ZONE       HEAT DUTY       AREA       LMTD       AVERAGE U       UA
             CAL/SEC         SQM         C         CAL/SEC-SQCM-K  CAL/SEC-K
    1          0.622         0.0002      12.9960     0.0203          0.0478
    2       3402.379         1.2893      12.9984     0.0203        261.7527

HEATX COLD-TQCU HEAT6    TQCURV INLET
-------------------------------------
```

```
  PRESSURE PROFILE:       CONSTANT2
  PRESSURE DROP:          0.0          BAR
  PROPERTY OPTION SET:    NRTL       RENON (NRTL) / IDEAL GAS

-----------------------------------------------------
!  DUTY       !  PRES       !  TEMP       !  VFRAC     !
!             !             !             !            !
!             !             !             !            !
!             !             !             !            !
!  CAL/SEC    !  BAR        !  C          !            !
!             !             !             !            !
!============!=============!=============!============!
!     0.0     !     1.0000  !    35.0599  !     0.0    !
!   162.0476  !     1.0000  !    33.9727  !     0.0    !
!   324.0953  !     1.0000  !    33.9727  !     0.0    !
!   486.1429  !     1.0000  !    32.8842  !     0.0    !
!   648.1906  !     1.0000  !    31.7947  !     0.0    !
!-----------+-------------+------------+------------!
!   810.2382  !     1.0000  !    30.7040  !     0.0    !
!   972.2859  !     1.0000  !    29.6121  !     0.0    !
!  1134.3335  !     1.0000  !    28.5191  !     0.0    !
!  1296.3811  !     1.0000  !    27.4251  !     0.0    !
!  1458.4288  !     1.0000  !    26.3299  !     0.0    !
!-----------+-------------+------------+------------!
!  1620.4764  !     1.0000  !    25.2337  !     0.0    !
!  1782.5241  !     1.0000  !    24.1364  !     0.0    !
!  1944.5717  !     1.0000  !    23.0380  !     0.0    !
!  2106.6194  !     1.0000  !    21.9387  !     0.0    !
!  2268.6670  !     1.0000  !    20.8383  !     0.0    !
!-----------+-------------+------------+------------!
!  2430.7146  !     1.0000  !    19.7369  !     0.0    !
!  2592.7623  !     1.0000  !    18.6345  !     0.0    !
!  2754.8099  !     1.0000  !    17.5311  !     0.0    !
!  2916.8576  !     1.0000  !    16.4267  !     0.0    !
!  3078.9052  !     1.0000  !    15.3214  !     0.0    !
!-----------+-------------+------------+------------!
!  3240.9529  !     1.0000  !    14.2152  !     0.0    !
!  3403.0005  !     1.0000  !    13.1081  !     0.0    !
-----------------------------------------------------

HEATX HOT-TQCUR HEAT6    TQCURV INLET
------------------------------------
  PRESSURE PROFILE:       CONSTANT2
  PRESSURE DROP:          0.0          BAR
  PROPERTY OPTION SET:    NRTL       RENON (NRTL) / IDEAL GAS

-----------------------------------------------------
!  DUTY       !  PRES       !  TEMP       !  VFRAC     !
!             !             !             !            !
!             !             !             !            !
!             !             !             !            !
!  CAL/SEC    !  BAR        !  C          !            !
!             !             !             !            !
!============!=============!=============!============!
!     0.0     !     1.0000  !    48.0560  !  4.5479-06 !
!   162.0476  !     1.0000  !    46.9846  !     0.0    !
!   324.0953  !     1.0000  !    45.9093  !     0.0    !
!   486.1429  !     1.0000  !    44.8308  !     0.0    !
!   648.1906  !     1.0000  !    43.7491  !     0.0    !
!-----------+-------------+------------+------------!
!   810.2382  !     1.0000  !    42.6643  !     0.0    !
!   972.2859  !     1.0000  !    41.5764  !     0.0    !
!  1134.3335  !     1.0000  !    40.4852  !     0.0    !
!  1296.3811  !     1.0000  !    39.3910  !     0.0    !
!  1458.4288  !     1.0000  !    38.2935  !     0.0    !
!-----------+-------------+------------+------------!
!  1620.4764  !     1.0000  !    37.1930  !     0.0    !
!  1782.5241  !     1.0000  !    36.0893  !     0.0    !
!  1944.5717  !     1.0000  !    34.9826  !     0.0    !
!  2106.6194  !     1.0000  !    33.8727  !     0.0    !
!  2268.6670  !     1.0000  !    32.7597  !     0.0    !
!-----------+-------------+------------+------------!
```

```
!  2430.7146 !     1.0000 !    31.6436 !     0.0    !
!  2592.7623 !     1.0000 !    30.5689 !     0.0    !
!  2754.8099 !     1.0000 !    29.4715 !     0.0    !
!  2916.8576 !     1.0000 !    28.3619 !     0.0    !
!  3078.9052 !     1.0000 !    27.2460 !     0.0    !
!-----------+-----------+-----------+-----------!
!  3240.9529 !     1.0000 !    26.1251 !     0.0    !
!  3403.0005 !     1.0000 !    25.0000 !     0.0    !
 -----------------------------------------------------
```

HEAT7 Block Report

```
 BLOCK:  HEAT7    MODEL: HEATX
 ------------------------------
   HOT SIDE:
   ---------
   INLET STREAM:             W-ETH
   OUTLET STREAM:            W-ETH2
   PROPERTY OPTION SET:   NRTL      RENON (NRTL) / IDEAL GAS
   COLD SIDE:
   ----------
   INLET STREAM:             S29
   OUTLET STREAM:            S30
   PROPERTY OPTION SET:   NRTL      RENON (NRTL) / IDEAL GAS

                      ***  MASS AND ENERGY BALANCE  ***
                                 IN               OUT        RELATIVE DIFF.
    TOTAL BALANCE
       MOLE(KMOL/HR )            114.250          114.250         0.00000
       MASS(KG/HR   )            2675.85          2675.85         0.00000
       ENTHALPY(CAL/SEC )     -0.215371E+07    -0.215371E+07    0.216214E-15

                      ***  CO2 EQUIVALENT SUMMARY ***
    FEED STREAMS CO2E             0.00000      KG/HR
    PRODUCT STREAMS CO2E          0.00000      KG/HR
    NET STREAMS CO2E PRODUCTION   0.00000      KG/HR
    UTILITIES CO2E PRODUCTION     0.00000      KG/HR
    TOTAL CO2E PRODUCTION         0.00000      KG/HR

                         ***  INPUT DATA  ***

   FLASH SPECS FOR HOT SIDE:
   TWO    PHASE      FLASH
   MAXIMUM NO. ITERATIONS                                    30
   CONVERGENCE TOLERANCE                                      0.000100000

   FLASH SPECS FOR COLD SIDE:
   TWO    PHASE      FLASH
   MAXIMUM NO. ITERATIONS                                    30
   CONVERGENCE TOLERANCE                                      0.000100000

   FLOW DIRECTION AND SPECIFICATION:
     COUNTERCURRENT   HEAT EXCHANGER
     SPECIFIED HOT OUTLET TEMP
     SPECIFIED VALUE               C                         30.0000
     LMTD CORRECTION FACTOR                                   1.00000

   PRESSURE SPECIFICATION:
     HOT  SIDE PRESSURE DROP       BAR                        0.0000
     COLD SIDE PRESSURE DROP       BAR                        0.0000

   HEAT TRANSFER COEFFICIENT SPECIFICATION:
     HOT LIQUID    COLD LIQUID     CAL/SEC-SQCM-K             0.0203
     HOT 2-PHASE   COLD LIQUID     CAL/SEC-SQCM-K             0.0203
     HOT VAPOR     COLD LIQUID     CAL/SEC-SQCM-K             0.0203
     HOT LIQUID    COLD 2-PHASE    CAL/SEC-SQCM-K             0.0203
     HOT 2-PHASE   COLD 2-PHASE    CAL/SEC-SQCM-K             0.0203
     HOT VAPOR     COLD 2-PHASE    CAL/SEC-SQCM-K             0.0203
```

```
  HOT LIQUID     COLD VAPOR       CAL/SEC-SQCM-K          0.0203
  HOT 2-PHASE    COLD VAPOR       CAL/SEC-SQCM-K          0.0203
  HOT VAPOR      COLD VAPOR       CAL/SEC-SQCM-K          0.0203

                      ***  OVERALL RESULTS  ***

  STREAMS:
                  ---------------------------------------
                  |                                     |
  W-ETH     ----->|                HOT                  |-----> W-ETH2
  T=  9.9937D+01  |                                     |       T=  3.0000D+01
  P=  2.1551D+00  |                                     |       P=  2.1551D+00
  V=  0.0000D+00  |                                     |       V=  0.0000D+00
                  |                                     |
  S30       <-----|                COLD                 |<----- S29
  T=  8.4327D+01  |                                     |       T=  1.2000D+01
  P=  1.0000D+00  |                                     |       P=  1.0000D+00
  V=  0.0000D+00  |                                     |       V=  0.0000D+00
                  ---------------------------------------

  DUTY AND AREA:
    CALCULATED HEAT DUTY          CAL/SEC             29259.5373
    CALCULATED (REQUIRED) AREA    SQM                     8.5908
    ACTUAL EXCHANGER AREA         SQM                     8.5908
    PER CENT OVER-DESIGN                                  0.0000

  HEAT TRANSFER COEFFICIENT:
    AVERAGE COEFFICIENT (DIRTY)   CAL/SEC-SQCM-K          0.0203
    UA (DIRTY)                    CAL/SEC-K            1744.0997

  LOG-MEAN TEMPERATURE DIFFERENCE:
    LMTD CORRECTION FACTOR                                1.0000
    LMTD (CORRECTED)              C                      16.7763
    NUMBER OF SHELLS IN SERIES                            1

  PRESSURE DROP:
    HOTSIDE, TOTAL                BAR                     0.0000
    COLDSIDE, TOTAL               BAR                     0.0000

                      ***  ZONE RESULTS  ***

  TEMPERATURE LEAVING EACH ZONE:

                                HOT
          ------------------------------------------------------------
          |                                                          |
HOT IN    |                          LIQ                             | HOT OUT
------>   |                                                          |------>
  99.9    |                                                          |   30.0
          |                                                          |
COLDOUT   |                          LIQ                             | COLDIN
<------   |                                                          |<------
  84.3    |                                                          |   12.0
          |                                                          |
          ------------------------------------------------------------
                                COLD

  ZONE HEAT TRANSFER AND AREA:

  ZONE       HEAT DUTY       AREA        LMTD       AVERAGE U       UA
             CAL/SEC         SQM          C         CAL/SEC-SQCM-K  CAL/SEC-K
    1      29259.537         8.5908      16.7763      0.0203        1744.0997

HEATX COLD-TQCU HEAT7    TQCURV INLET
-------------------------------------
  PRESSURE PROFILE:      CONSTANT2
  PRESSURE DROP:         0.0          BAR
  PROPERTY OPTION SET:   NRTL      RENON (NRTL) / IDEAL GAS

-----------------------------------------------------
!  DUTY      !  PRES      !  TEMP      !  VFRAC     !
!            !            !            !            !
```

CAL/SEC	BAR	C	
0.0	1.0000	84.3267	0.0
1393.3113	1.0000	81.0327	0.0
2786.6226	1.0000	81.0327	0.0
4179.9339	1.0000	77.7216	0.0
5573.2452	1.0000	74.3935	0.0
6966.5565	1.0000	71.0489	0.0
8359.8678	1.0000	67.6879	0.0
9753.1791	1.0000	64.3110	0.0
1.1146+04	1.0000	60.9185	0.0
1.2540+04	1.0000	57.5108	0.0
1.3933+04	1.0000	54.0881	0.0
1.5326+04	1.0000	50.6509	0.0
1.6720+04	1.0000	47.1996	0.0
1.8113+04	1.0000	43.7345	0.0
1.9506+04	1.0000	40.2561	0.0
2.0900+04	1.0000	36.7647	0.0
2.2293+04	1.0000	33.2608	0.0
2.3686+04	1.0000	29.7449	0.0
2.5080+04	1.0000	26.2173	0.0
2.6473+04	1.0000	22.6786	0.0
2.7866+04	1.0000	19.1291	0.0
2.9260+04	1.0000	15.5695	0.0

HEATX HOT-TQCUR HEAT7 TQCURV INLET

PRESSURE PROFILE:	CONSTANT2	
PRESSURE DROP:	0.0	BAR
PROPERTY OPTION SET:	NRTL	RENON (NRTL) / IDEAL GAS

DUTY	PRES	TEMP	VFRAC
CAL/SEC	BAR	C	
0.0	2.1551	99.9361	2.8112-06
1393.3113	2.1551	96.4918	0.0
2786.6226	2.1551	93.0525	0.0
4179.9339	2.1551	89.6198	0.0
5573.2452	2.1551	86.1950	0.0
6966.5565	2.1551	82.7790	0.0
8359.8678	2.1551	79.3729	0.0
9753.1791	2.1551	75.9778	0.0
1.1146+04	2.1551	72.5946	0.0
1.2540+04	2.1551	69.2241	0.0
1.3933+04	2.1551	65.8672	0.0
1.5326+04	2.1551	62.5246	0.0
1.6720+04	2.1551	59.1970	0.0
1.8113+04	2.1551	55.8851	0.0
1.9506+04	2.1551	52.5892	0.0
2.0900+04	2.1551	49.3100	0.0
2.2293+04	2.1551	46.0477	0.0
2.3686+04	2.1551	42.8028	0.0
2.5080+04	2.1551	39.5754	0.0
2.6473+04	2.1551	36.3658	0.0
2.7866+04	2.1551	33.1740	0.0

```
!  2.9260+04 !     2.1551 !    30.0000 !     0.0    !
-----------------------------------------------------
```

HEAT8 Block Report

```
BLOCK:  HEAT8    MODEL: HEATX
------------------------------
  HOT SIDE:
  ---------
  INLET STREAM:             MESITYL2
  OUTLET STREAM:            MESITYL3
  PROPERTY OPTION SET:   NRTL      RENON (NRTL) / IDEAL GAS
  COLD SIDE:
  ----------
  INLET STREAM:             S31
  OUTLET STREAM:            S32
  PROPERTY OPTION SET:   NRTL      RENON (NRTL) / IDEAL GAS

                     ***  MASS AND ENERGY BALANCE  ***
                                  IN               OUT        RELATIVE DIFF.
   TOTAL BALANCE
      MOLE(KMOL/HR )            520.558          520.558          0.00000
      MASS(KG/HR   )            24726.8          24726.8          0.00000
      ENTHALPY(CAL/SEC )     -0.735453E+07    -0.735453E+07    -0.126633E-15

                     ***  CO2 EQUIVALENT SUMMARY ***
   FEED STREAMS CO2E             0.00000      KG/HR
   PRODUCT STREAMS CO2E          0.00000      KG/HR
   NET STREAMS CO2E PRODUCTION   0.00000      KG/HR
   UTILITIES CO2E PRODUCTION     0.00000      KG/HR
   TOTAL CO2E PRODUCTION         0.00000      KG/HR

                         ***  INPUT DATA  ***

  FLASH SPECS FOR HOT SIDE:
  TWO    PHASE      FLASH
  MAXIMUM NO. ITERATIONS                                  30
  CONVERGENCE TOLERANCE                                    0.000100000

  FLASH SPECS FOR COLD SIDE:
  TWO    PHASE      FLASH
  MAXIMUM NO. ITERATIONS                                  30
  CONVERGENCE TOLERANCE                                    0.000100000

  FLOW DIRECTION AND SPECIFICATION:
    COUNTERCURRENT   HEAT EXCHANGER
    SPECIFIED HOT OUTLET TEMP
    SPECIFIED VALUE                C                     25.0000
    LMTD CORRECTION FACTOR                               1.00000

  PRESSURE SPECIFICATION:
    HOT  SIDE PRESSURE DROP        BAR                   0.0000
    COLD SIDE PRESSURE DROP        BAR                   0.0000

  HEAT TRANSFER COEFFICIENT SPECIFICATION:
    HOT LIQUID    COLD LIQUID      CAL/SEC-SQCM-K        0.0203
    HOT 2-PHASE   COLD LIQUID      CAL/SEC-SQCM-K        0.0203
    HOT VAPOR     COLD LIQUID      CAL/SEC-SQCM-K        0.0203
    HOT LIQUID    COLD 2-PHASE     CAL/SEC-SQCM-K        0.0203
    HOT 2-PHASE   COLD 2-PHASE     CAL/SEC-SQCM-K        0.0203
    HOT VAPOR     COLD 2-PHASE     CAL/SEC-SQCM-K        0.0203
    HOT LIQUID    COLD VAPOR       CAL/SEC-SQCM-K        0.0203
    HOT 2-PHASE   COLD VAPOR       CAL/SEC-SQCM-K        0.0203
    HOT VAPOR     COLD VAPOR       CAL/SEC-SQCM-K        0.0203

                       ***  OVERALL RESULTS  ***

  STREAMS:
                  -------------------------------------
```

```
                  |                                   |
MESITYL2  ----->|                HOT                |-----> MESITYL3
T=  1.6219D+02  |                                   |       T=  2.5000D+01
P=  1.0000D+00  |                                   |       P=  1.0000D+00
V=  0.0000D+00  |                                   |       V=  0.0000D+00
                |                                   |
S32       <-----|                COLD               |<----- S31
T=  9.9649D+01  |                                   |       T=  1.2000D+01
P=  1.0000D+00  |                                   |       P=  1.0000D+00
V=  1.5854D-01  |                                   |       V=  0.0000D+00
                ------------------------------------

DUTY AND AREA:
  CALCULATED HEAT DUTY           CAL/SEC             324209.0175
  CALCULATED (REQUIRED) AREA     SQM                    130.5787
  ACTUAL EXCHANGER AREA          SQM                    130.5787
  PER CENT OVER-DESIGN                                    0.0000

HEAT TRANSFER COEFFICIENT:
  AVERAGE COEFFICIENT (DIRTY)    CAL/SEC-SQCM-K          0.0203
  UA (DIRTY)                     CAL/SEC-K            26509.9527

LOG-MEAN TEMPERATURE DIFFERENCE:
  LMTD CORRECTION FACTOR                                  1.0000
  LMTD (CORRECTED)               C                       12.2297
  NUMBER OF SHELLS IN SERIES                               1

PRESSURE DROP:
  HOTSIDE, TOTAL                 BAR                      0.0000
  COLDSIDE, TOTAL                BAR                      0.0000

                      ***  ZONE RESULTS  ***

TEMPERATURE LEAVING EACH ZONE:

                                  HOT
        ------------------------------------------------------------
        |                            |                             |
HOT IN  |            LIQ             |            LIQ              | HOT OUT
------> |                            |                             |------>
 162.2  |                        100.1|                             |   25.0
        |                            |                             |
COLDOUT |            BOIL            |            LIQ              | COLDIN
<------ |                            |                             |<------
  99.6  |                         99.6|                             |   12.0
        |                            |                             |
        ------------------------------------------------------------
                                  COLD

ZONE HEAT TRANSFER AND AREA:

ZONE       HEAT DUTY       AREA       LMTD       AVERAGE U       UA
           CAL/SEC         SQM         C         CAL/SEC-SQCM-K  CAL/SEC-K
  1     158437.951       34.0164      22.9422     0.0203        6905.9730
  2     165771.067       96.5623       8.4560     0.0203       19603.9797

HEATX COLD-TQCU HEAT8    TQCURV INLET
-------------------------------------
  PRESSURE PROFILE:      CONSTANT2
  PRESSURE DROP:         0.0         BAR
  PROPERTY OPTION SET:   NRTL      RENON (NRTL) / IDEAL GAS

-----------------------------------------------------
!  DUTY      !  PRES      !  TEMP      !  VFRAC     !
!            !            !            !            !
!            !            !            !            !
!            !            !            !            !
!  CAL/SEC   !  BAR       !  C         !            !
!            !            !            !            !
!============!============!============!============!
!     0.0    !     1.0000 !    99.6491 !     0.1585 !
!  1.5439+04 !     1.0000 !    99.6491 !     0.1431 !
```

```
!  3.0877+04 !     1.0000 !    99.6491 !     0.1276 !
!  4.6316+04 !     1.0000 !    99.6491 !     0.1122 !
!  6.1754+04 !     1.0000 !    99.6491 !  9.6745-02 !
!-----------+-----------+-----------+-----------!
!  7.7193+04 !     1.0000 !    99.6491 !  8.1297-02 !
!  9.2631+04 !     1.0000 !    99.6491 !  6.5849-02 !
!  1.0807+05 !     1.0000 !    99.6491 !  5.0400-02 !
!  1.2351+05 !     1.0000 !    99.6491 !  3.4952-02 !
!  1.3895+05 !     1.0000 !    99.6491 !  1.9504-02 !
!-----------+-----------+-----------+-----------!
!  1.5439+05 !     1.0000 !    99.6491 !  4.0553-03 !
!  1.5844+05 !     1.0000 !    99.6491 ! BUB>0.0    !
!  1.6982+05 !     1.0000 !    93.9663 !     0.0    !
!  1.8526+05 !     1.0000 !    86.1702 !     0.0    !
!  2.0070+05 !     1.0000 !    78.2731 !     0.0    !
!-----------+-----------+-----------+-----------!
!  2.1614+05 !     1.0000 !    70.2787 !     0.0    !
!  2.3158+05 !     1.0000 !    62.1913 !     0.0    !
!  2.4702+05 !     1.0000 !    54.0156 !     0.0    !
!  2.6245+05 !     1.0000 !    45.7566 !     0.0    !
!  2.7789+05 !     1.0000 !    37.4197 !     0.0    !
!-----------+-----------+-----------+-----------!
!  2.9333+05 !     1.0000 !    29.0105 !     0.0    !
!  3.0877+05 !     1.0000 !    20.5352 !     0.0    !
!  3.2421+05 !     1.0000 !    12.0000 !     0.0    !
-------------------------------------------------------

HEATX HOT-TQCUR HEAT8    TQCURV INLET
-------------------------------------
  PRESSURE PROFILE:      CONSTANT2
  PRESSURE DROP:         0.0          BAR
  PROPERTY OPTION SET:   NRTL      RENON (NRTL) / IDEAL GAS

-------------------------------------------------------
!  DUTY       !  PRES       !  TEMP       !  VFRAC      !
!             !             !             !             !
!             !             !             !             !
!             !             !             !             !
!  CAL/SEC    !  BAR        !  C          !             !
!             !             !             !             !
!===========!=============!=============!=============!
!     0.0    !     1.0000 !   162.1895 !     0.0    !
!  1.5439+04 !     1.0000 !   156.5136 !     0.0    !
!  3.0877+04 !     1.0000 !   150.7612 !     0.0    !
!  4.6316+04 !     1.0000 !   144.9310 !     0.0    !
!  6.1754+04 !     1.0000 !   139.0216 !     0.0    !
!-----------+-----------+-----------+-----------!
!  7.7193+04 !     1.0000 !   133.0313 !     0.0    !
!  9.2631+04 !     1.0000 !   126.9587 !     0.0    !
!  1.0807+05 !     1.0000 !   120.8023 !     0.0    !
!  1.2351+05 !     1.0000 !   114.5603 !     0.0    !
!  1.3895+05 !     1.0000 !   108.2311 !     0.0    !
!-----------+-----------+-----------+-----------!
!  1.5439+05 !     1.0000 !   101.8132 !     0.0    !
!  1.5844+05 !     1.0000 !   100.1135 !     0.0    !
!  1.6982+05 !     1.0000 !    95.3048 !     0.0    !
!  1.8526+05 !     1.0000 !    88.7046 !     0.0    !
!  2.0070+05 !     1.0000 !    82.0111 !     0.0    !
!-----------+-----------+-----------+-----------!
!  2.1614+05 !     1.0000 !    75.2228 !     0.0    !
!  2.3158+05 !     1.0000 !    68.3388 !     0.0    !
!  2.4702+05 !     1.0000 !    61.3581 !     0.0    !
!  2.6245+05 !     1.0000 !    54.2801 !     0.0    !
!  2.7789+05 !     1.0000 !    47.1048 !     0.0    !
!-----------+-----------+-----------+-----------!
!  2.9333+05 !     1.0000 !    39.8323 !     0.0    !
!  3.0877+05 !     1.0000 !    32.4635 !     0.0    !
!  3.2421+05 !     1.0000 !    25.0000 !     0.0    !
-------------------------------------------------------
```

LLE1 Block Report

```
BLOCK:  LLE1     MODEL: EXTRACT
------------------------------

   INLETS   - HEATBRO2 STAGE   1
              SOLVEREC STAGE  10
   OUTLETS  - EXTRACT  STAGE   1
              WATEROUT STAGE  10
  PROPERTY OPTION SET:   NRTL      RENON (NRTL) / IDEAL GAS

                     ***  MASS AND ENERGY BALANCE  ***
                                  IN               OUT        RELATIVE DIFF.
   TOTAL BALANCE
      MOLE(KMOL/HR )            6383.40          6383.40       -0.284956E-15
      MASS(KG/HR   )            293863.          293863.        0.198078E-15
      ENTHALPY(CAL/SEC )      -0.956932E+08    -0.956943E+08    0.122173E-04

                     ***  CO2 EQUIVALENT SUMMARY ***
   FEED STREAMS CO2E             939.160      KG/HR
   PRODUCT STREAMS CO2E          939.160      KG/HR
   NET STREAMS CO2E PRODUCTION   0.00000      KG/HR
   UTILITIES CO2E PRODUCTION     0.00000      KG/HR
   TOTAL CO2E PRODUCTION         0.00000      KG/HR



                        **********************
                        ****  INPUT DATA  ****
                        **********************

  ****    INPUT PARAMETERS    ****

   NUMBER OF THEORETICAL STAGES                                10
   MAXIMUM NO. OF OUTSIDE LOOPS                                25
   MAXIMUM NO. OF INSIDE LOOPS PER OUTSIDE LOOP                10
   OUTSIDE LOOP CONVERGENCE TOLERANCE                           0.000100000
   QMIN FOR BOUNDED WEGSTEIN IN OUTSIDE LOOP                    0.0
   QMAX FOR BOUNDED WEGSTEIN IN OUTSIDE LOOP                    0.50000
   QMIN FOR BOUNDED WEGSTEIN IN INSIDE LOOP                     0.0
   QMAX FOR BOUNDED WEGSTEIN IN INSIDE LOOP                     0.50000
   OUTSIDE LOOP ERROR THRESHOLD FOR BROYDEN METHOD              0.100000


  ****    KEY COMPONENT SPECIFICATIONS    ****

   KEY COMPONENTS FOR LIQUID1                    WATER

   KEY COMPONENTS FOR LIQUID2                    1:3:5-01


  ****     PROFILES    ****

   TEMP-EST         STAGE   1  TEMP  C                       25.0000

   P-SPEC           STAGE   1  PRES  BAR                      1.00000

                        ********************
                        ****  RESULTS  ****
                        ********************


  ***    COMPONENT SPLIT FRACTIONS    ***

                            OUTLET STREAMS
                            --------------
                  EXTRACT       WATEROUT
   COMPONENT:
   BUTANOL      1.0000        .14808E-08
   ACETONE      .99997        .32267E-04
   ETHANOL      .99927        .73288E-03
   WATER        .53927E-02    .99461
```

CO2	.41770	.58230
N-BUT-01	1.0000	.61657E-09
ACETI-01	.41845	.58155
1:3:5-01	.99998	.23964E-04
HYDROGEN	.41770	.58230

****
**** RESULTS ****
****

TOP STAGE TEMPERATURE	C	69.3434
BOTTOM STAGE TEMPERATURE	C	28.6367
TOP STAGE LIQUID1 FLOW	KMOL/HR	4,570.84
BOTTOM STAGE LIQUID1 FLOW	KMOL/HR	4,529.37
TOP STAGE LIQUID2 FLOW	KMOL/HR	1,854.03
BOTTOM STAGE LIQUID2 FLOW	KMOL/HR	1,673.69

**** MAXIMUM FINAL RELATIVE ERRORS ****,

L1 BUBBLE POINT ERROR	0.73605E-02	STAGE= 1	
L2 BUBBLE POINT ERROR	0.56522E-02	STAGE= 1	
COMPONENT MASS BALANCE	0.36029E-15	STAGE= 3	COMP=1:3:5-01
ENERGY BALANCE	0.35358E-03	STAGE= 1	

**** PROFILES ****

STAGE	TEMPERATURE C	PRESSURE BAR	ENTHALPY CAL/MOL LIQUID1	ENTHALPY CAL/MOL LIQUID2	HEAT DUTY CAL/SEC
1	69.343	1.0000	-67588.	-19028.	
2	63.567	1.0000	-67678.	-14578.	
9	32.414	1.0000	-68227.	-15238.	
10	28.637	1.0000	-68270.	-15317.	

STAGE	FLOW RATE KMOL/HR LIQUID1	FLOW RATE KMOL/HR LIQUID2	FEED RATE KMOL/HR	PRODUCT RATE KMOL/HR LIQUID1	PRODUCT RATE KMOL/HR LIQUID2
1	4571.	1854.	4719.4710		1854.0280
2	4553.	1705.			
9	4539.	1676.			
10	4529.	1674.	1663.9300	4529.3730	

**** MASS FLOW PROFILES ****

STAGE	FLOW RATE KG/HR LIQUID1	FLOW RATE KG/HR LIQUID2	FEED RATE KG/HR	PRODUCT RATE KG/HR LIQUID1	PRODUCT RATE KG/HR LIQUID2
1	0.8388E+05	0.2119E+06	.93868+05		.21190+06
2	0.8281E+05	0.2019E+06			
9	0.8227E+05	0.2004E+06			
10	0.8196E+05	0.2003E+06	.19999+06	.81958+05	

**** LIQUID1 PROFILE ****

STAGE	BUTANOL	ACETONE	ETHANOL	WATER	CO2
1	0.20097E-02	0.19495E-02	0.33085E-03	0.99053	0.44975E-02
2	0.18018E-03	0.66281E-03	0.16460E-03	0.99390	0.44830E-02
9	0.21538E-09	0.64403E-06	0.14627E-05	0.99571	0.37838E-02
10	0.39829E-10	0.19654E-06	0.53340E-06	0.99689	0.27435E-02

**** LIQUID1 PROFILE ****

STAGE	N-BUT-01	ACETI-01	1:3:5-01	HYDROGEN
1	0.83298E-04	0.36546E-03	0.13589E-04	0.22060E-03
2	0.11266E-04	0.36422E-03	0.11174E-04	0.21989E-03
9	0.40532E-11	0.30741E-03	0.95866E-05	0.18559E-03
10	0.39059E-12	0.22289E-03	0.88034E-05	0.13456E-03

**** LIQUID2 PROFILE ****

STAGE	BUTANOL	ACETONE	ETHANOL	WATER	CO2
1	0.65710E-01	0.14880E-01	0.17768E-02	0.13205E-01	0.48077E-02
2	0.53864E-02	0.52245E-02	0.88534E-03	0.71929E-02	0.47678E-02
9	0.28745E-08	0.41311E-05	0.70154E-05	0.29635E-02	0.39246E-02
10	0.47633E-09	0.12148E-05	0.25235E-05	0.26201E-02	0.28375E-02

**** LIQUID2 PROFILE ****

STAGE	N-BUT-01	ACETI-01	1:3:5-01	HYDROGEN
1	0.15476E-02	0.39181E-03	0.89745	0.23581E-03
2	0.22326E-03	0.38753E-03	0.97570	0.23386E-03
9	0.99613E-10	0.31885E-03	0.99259	0.19250E-03
10	0.99353E-11	0.23053E-03	0.99417	0.13918E-03

**** K-VALUES ****

STAGE	BUTANOL	ACETONE	ETHANOL	WATER	CO2
1	32.850	7.6497	5.3897	0.13407E-01	1.0727
2	29.905	7.8803	5.3735	0.72131E-02	1.0621
9	13.322	6.4106	4.7947	0.29705E-02	1.0371
10	11.946	6.1783	4.7302	0.26251E-02	1.0342

**** K-VALUES ****

STAGE	N-BUT-01	ACETI-01	1:3:5-01	HYDROGEN
1	18.641	1.0758	66549.	1.0727
2	19.792	1.0626	87473.	1.0621
9	24.588	1.0371	0.10362E+06	1.0371
10	25.445	1.0342	0.11300E+06	1.0342

**** MASS-X1-PROFILE ****

STAGE	BUTANOL	ACETONE	ETHANOL	WATER	CO2
1	0.81173E-02	0.61699E-02	0.83056E-03	0.97239	0.10786E-01
2	0.73435E-03	0.21167E-02	0.41694E-03	0.98453	0.10848E-01
9	0.88081E-09	0.20638E-05	0.37180E-05	0.98970	0.91878E-02
10	0.16315E-09	0.63085E-06	0.13580E-05	0.99251	0.66727E-02

**** MASS-X1-PROFILE ****

STAGE	N-BUT-01	ACETI-01	1:3:5-01	HYDROGEN
1	0.39992E-03	0.11959E-02	0.89004E-04	0.24232E-04
2	0.54578E-04	0.12027E-02	0.73849E-04	0.24373E-04
9	0.19703E-10	0.10186E-02	0.63574E-04	0.20642E-04
10	0.19018E-11	0.73973E-03	0.58477E-04	0.14991E-04

**** MASS-X2-PROFILE ****

STAGE	BUTANOL	ACETONE	ETHANOL	WATER	CO2
1	0.42614E-01	0.75614E-02	0.71616E-03	0.20813E-02	0.18512E-02
2	0.33721E-02	0.25628E-02	0.34448E-03	0.10944E-02	0.17722E-02
9	0.17822E-08	0.20070E-05	0.27034E-05	0.44657E-03	0.14448E-02
10	0.29501E-09	0.58951E-06	0.97139E-06	0.39439E-03	0.10434E-02

**** MASS-X2-PROFILE ****

STAGE	N-BUT-01	ACETI-01	1:3:5-01	HYDROGEN
1	0.11930E-02	0.20586E-03	0.94377	0.41591E-05
2	0.16613E-03	0.19656E-03	0.99049	0.39816E-05
9	0.73413E-10	0.16016E-03	0.99794	0.32459E-05
10	0.73142E-11	0.11567E-03	0.99844	0.23443E-05

LLE2 Block Report

```
BLOCK:  LLE2     MODEL: EXTRACT
------------------------------

   INLETS    - ACETONE  STAGE   1
               MESITYLE STAGE   3
   OUTLETS   - MESACETO STAGE   1
```

```
           WATER    STAGE   3
PROPERTY OPTION SET:   NRTL      RENON (NRTL) / IDEAL GAS

                   ***  MASS AND ENERGY BALANCE  ***
                                IN                OUT        RELATIVE DIFF.
 TOTAL BALANCE
    MOLE(KMOL/HR )            169.800          169.800          0.00000
    MASS(KG/HR   )            19083.1          19083.1          0.00000
    ENTHALPY(CAL/SEC )       -955236.         -955288.         0.544235E-04

                   ***  CO2 EQUIVALENT SUMMARY ***
 FEED STREAMS CO2E             2.11177      KG/HR
 PRODUCT STREAMS CO2E          2.11177      KG/HR
 NET STREAMS CO2E PRODUCTION   0.00000      KG/HR
 UTILITIES CO2E PRODUCTION     0.00000      KG/HR
 TOTAL CO2E PRODUCTION         0.00000      KG/HR


                     **********************
                     ****  INPUT DATA  ****
                     **********************

****   INPUT PARAMETERS   ****

 NUMBER OF THEORETICAL STAGES                                3
 MAXIMUM NO. OF OUTSIDE LOOPS                               25
 MAXIMUM NO. OF INSIDE LOOPS PER OUTSIDE LOOP               10
 OUTSIDE LOOP CONVERGENCE TOLERANCE                          0.000100000
 QMIN FOR BOUNDED WEGSTEIN IN OUTSIDE LOOP                   0.0
 QMAX FOR BOUNDED WEGSTEIN IN OUTSIDE LOOP                   0.50000
 QMIN FOR BOUNDED WEGSTEIN IN INSIDE LOOP                    0.0
 QMAX FOR BOUNDED WEGSTEIN IN INSIDE LOOP                    0.50000
 OUTSIDE LOOP ERROR THRESHOLD FOR BROYDEN METHOD             0.100000

****   KEY COMPONENT SPECIFICATIONS   ****

 KEY COMPONENTS FOR LIQUID1                    WATER

 KEY COMPONENTS FOR LIQUID2                    1:3:5-01

****    PROFILES   ****

 TEMP-EST        STAGE   1  TEMP  C                       25.0000

 P-SPEC          STAGE   1  PRES  BAR                      1.00000

                     ******************
                     ****  RESULTS  ****
                     ******************

***   COMPONENT SPLIT FRACTIONS   ***

                          OUTLET STREAMS
                          --------------
                MESACETO      WATER
 COMPONENT:
 BUTANOL      1.0000        .67339E-09
 ACETONE      1.0000        .40890E-08
 ETHANOL      1.0000        .89017E-08
 WATER        .47168        .52832
 CO2          1.0000        .76099E-06
 ACETI-01     1.0000        .76099E-06
 1:3:5-01     1.0000        .57944E-07
 HYDROGEN     1.0000        .76099E-06
```

****
**** RESULTS ****
****

TOP STAGE TEMPERATURE	C	27.4344
BOTTOM STAGE TEMPERATURE	C	24.7714
TOP STAGE LIQUID1 FLOW	KMOL/HR	1.60899
BOTTOM STAGE LIQUID1 FLOW	KMOL/HR	1.24163
TOP STAGE LIQUID2 FLOW	KMOL/HR	168.558
BOTTOM STAGE LIQUID2 FLOW	KMOL/HR	150.337

**** MAXIMUM FINAL RELATIVE ERRORS ****,

L1 BUBBLE POINT ERROR	0.26924E-01	STAGE= 1	
L2 BUBBLE POINT ERROR	0.26810E-02	STAGE= 1	
COMPONENT MASS BALANCE	0.11647E-09	STAGE= 3	COMP=ACETI-01
ENERGY BALANCE	0.15157E-03	STAGE= 1	

**** PROFILES ****

STAGE	TEMPERATURE C	PRESSURE BAR	ENTHALPY CAL/MOL LIQUID1	ENTHALPY CAL/MOL LIQUID2	HEAT DUTY CAL/SEC
1	27.434	1.0000	-68093.	-19900.	
2	24.776	1.0000	-68266.	-15251.	
3	24.771	1.0000	-68266.	-15242.	

STAGE	FLOW RATE KMOL/HR LIQUID1	FLOW RATE KMOL/HR LIQUID2	FEED RATE KMOL/HR	PRODUCT RATE KMOL/HR LIQUID1	PRODUCT RATE KMOL/HR LIQUID2
1	1.609	168.6	19.8000		168.5583
2	1.579	150.4			
3	1.242	150.3	150.0000	1.2416	

**** MASS FLOW PROFILES ****

STAGE	FLOW RATE KG/HR LIQUID1	FLOW RATE KG/HR LIQUID2	FEED RATE KG/HR	PRODUCT RATE KG/HR LIQUID1	PRODUCT RATE KG/HR LIQUID2
1	30.17	0.1906E+05	1053.9421		.19061+05
2	28.44	0.1804E+05			
3	22.37	0.1804E+05	.18029+05	22.3692	

**** LIQUID1 PROFILE ****

STAGE	BUTANOL	ACETONE	ETHANOL	WATER	CO2
1	0.36312E-08	0.17988E-01	0.14124E-03	0.98157	0.28042E-03
2	0.36269E-11	0.32342E-04	0.32285E-06	0.99996	0.29105E-05
3	0.35521E-14	0.56977E-07	0.72278E-09	0.99999	0.29409E-07

**** LIQUID1 PROFILE ****

STAGE	ACETI-01	1:3:5-01	HYDROGEN
1	0.10776E-11	0.23754E-04	0.32501E-10
2	0.11184E-13	0.70183E-05	0.33734E-12
3	0.0000	0.70002E-05	0.34086E-14

**** LIQUID2 PROFILE ****

STAGE	BUTANOL	ACETONE	ETHANOL	WATER	CO2
1	0.38856E-07	0.10264	0.59810E-03	0.65763E-02	0.28467E-03
2	0.38855E-10	0.19248E-03	0.15113E-05	0.22459E-02	0.30003E-05
3	0.38052E-13	0.33911E-06	0.33839E-08	0.22404E-02	0.30317E-07

**** LIQUID2 PROFILE ****

STAGE	ACETI-01	1:3:5-01	HYDROGEN
1	0.10939E-11	0.88990	0.32995E-10
2	0.11529E-13	0.99756	0.34775E-12
3	0.0000	0.99776	0.35138E-14

**** K-VALUES ****

STAGE	BUTANOL	ACETONE	ETHANOL	WATER	CO2
1	10.739	5.7252	4.2465	0.67177E-02	1.0178
2	10.713	5.9514	4.6810	0.22459E-02	1.0308
3	10.713	5.9518	4.6819	0.22404E-02	1.0309

**** K-VALUES ****

STAGE	ACETI-01	1:3:5-01	HYDROGEN
1	1.0178	38581.	1.0178
2	1.0308	0.14214E+06	1.0308
3	1.0309	0.14253E+06	1.0309

**** MASS-X1-PROFILE ****

STAGE	BUTANOL	ACETONE	ETHANOL	WATER	CO2
1	0.14355E-07	0.55722E-01	0.34703E-03	0.94312	0.65821E-03
2	0.14921E-10	0.10426E-03	0.82550E-06	0.99984	0.71093E-05
3	0.14614E-13	0.18368E-06	0.18482E-08	0.99995	0.71842E-07

**** MASS-X1-PROFILE ****

STAGE	ACETI-01	1:3:5-01	HYDROGEN
1	0.34513E-11	0.15228E-03	0.34944E-11
2	0.37278E-13	0.46819E-04	0.37743E-13
3	0.0000	0.46702E-04	0.38141E-15

**** MASS-X2-PROFILE ****

STAGE	BUTANOL	ACETONE	ETHANOL	WATER	CO2
1	0.25470E-07	0.52718E-01	0.24367E-03	0.10477E-02	0.11079E-03
2	0.24010E-10	0.93198E-04	0.58042E-06	0.33730E-03	0.11008E-05
3	0.23511E-13	0.16418E-06	0.12995E-08	0.33644E-03	0.11122E-07

**** MASS-X2-PROFILE ****

STAGE	ACETI-01	1:3:5-01	HYDROGEN
1	0.58094E-12	0.94588	0.58819E-12
2	0.57721E-14	0.99957	0.58441E-14
3	0.0000	0.99966	0.59046E-16

PUMP1 Block Report

BLOCK: PUMP1 MODEL: PUMP

INLET STREAM: COOLEXTR
OUTLET STREAM: PUMPEXTR
PROPERTY OPTION SET: NRTL RENON (NRTL) / IDEAL GAS

*** MASS AND ENERGY BALANCE ***

	IN	OUT	RELATIVE DIFF.
TOTAL BALANCE			
MOLE(KMOL/HR)	1854.03	1854.03	0.00000
MASS(KG/HR)	211905.	211905.	0.00000
ENTHALPY(CAL/SEC)	-0.103155E+08	-0.103133E+08	-0.208616E-03

*** CO2 EQUIVALENT SUMMARY ***

FEED STREAMS CO2E	392.282	KG/HR
PRODUCT STREAMS CO2E	392.282	KG/HR
NET STREAMS CO2E PRODUCTION	0.00000	KG/HR
UTILITIES CO2E PRODUCTION	0.00000	KG/HR
TOTAL CO2E PRODUCTION	0.00000	KG/HR

*** INPUT DATA ***

OUTLET PRESSURE BAR	2.00000
DRIVER EFFICIENCY	1.00000

FLASH SPECIFICATIONS:
LIQUID PHASE CALCULATION
NO FLASH PERFORMED

MAXIMUM NUMBER OF ITERATIONS	30
TOLERANCE	0.000100000

```
                          ***  RESULTS  ***
   VOLUMETRIC FLOW RATE  L/MIN                          4,207.35
   PRESSURE CHANGE  BAR                                    1.00000
   NPSH AVAILABLE   M-KGF/KG                             -32.9629
   FLUID POWER  KW                                         7.01225
   BRAKE POWER  KW                                         9.00992
   ELECTRICITY  KW                                         9.00992
   PUMP EFFICIENCY USED                                    0.77828
   NET WORK REQUIRED  KW                                   9.00992
   HEAD DEVELOPED M-KGF/KG                                12.1478
   NEGATIVE NPSH MAY BE DUE TO VAPOR IN THE FEED OR UNACCOUNTED SUCTION HEAD.
```

PUMP2 Block Report

```
BLOCK:  PUMP2    MODEL: PUMP
------------------------------
  INLET STREAM:          S22
  OUTLET STREAM:         S-AEW2
  PROPERTY OPTION SET:   NRTL      RENON (NRTL) / IDEAL GAS

                     ***  MASS AND ENERGY BALANCE  ***
                                    IN               OUT        RELATIVE DIFF.
   TOTAL BALANCE
      MOLE(KMOL/HR )            56.2500          56.2500          0.00000
      MASS(KG/HR   )            2403.48          2403.48          0.00000
      ENTHALPY(CAL/SEC )     -0.103838E+07    -0.103835E+07    -0.315623E-04

                     ***  CO2 EQUIVALENT SUMMARY ***
   FEED STREAMS CO2E             17.0600      KG/HR
   PRODUCT STREAMS CO2E          17.0600      KG/HR
   NET STREAMS CO2E PRODUCTION   0.00000      KG/HR
   UTILITIES CO2E PRODUCTION     0.00000      KG/HR
   TOTAL CO2E PRODUCTION         0.00000      KG/HR

                        ***  INPUT DATA  ***
   OUTLET PRESSURE  BAR                                    2.50000
   DRIVER EFFICIENCY                                       1.00000

   FLASH SPECIFICATIONS:
   LIQUID PHASE CALCULATION
   NO FLASH PERFORMED
   MAXIMUM NUMBER OF ITERATIONS                            30
   TOLERANCE                                               0.000100000

                          ***  RESULTS  ***
   VOLUMETRIC FLOW RATE  L/MIN                            48.6832
   PRESSURE CHANGE  BAR                                    0.50000
   NPSH AVAILABLE   M-KGF/KG                              18.0799
   FLUID POWER  KW                                         0.040569
   BRAKE POWER  KW                                         0.13722
   ELECTRICITY  KW                                         0.13722
   PUMP EFFICIENCY USED                                    0.29566
   NET WORK REQUIRED  KW                                   0.13722
   HEAD DEVELOPED M-KGF/KG                                 6.19640
```

PURGE1 Block Report

```
BLOCK:  PURGE1   MODEL: FSPLIT
------------------------------
  INLET STREAM:          SOLVENT3
  OUTLET STREAMS:        SOLPURG1    SOLVREC
  PROPERTY OPTION SET:   NRTL      RENON (NRTL) / IDEAL GAS

                     ***  MASS AND ENERGY BALANCE  ***
                                    IN               OUT        RELATIVE DIFF.
   TOTAL BALANCE
      MOLE(KMOL/HR )            1669.03          1669.03          0.00000
```

```
      MASS(KG/HR    )            200409.          200409.          0.00000
      ENTHALPY(CAL/SEC )      -0.713846E+07    -0.713846E+07      0.00000

                      ***  CO2 EQUIVALENT SUMMARY ***
   FEED STREAMS CO2E             0.00000      KG/HR
   PRODUCT STREAMS CO2E          0.00000      KG/HR
   NET STREAMS CO2E PRODUCTION   0.00000      KG/HR
   UTILITIES CO2E PRODUCTION     0.00000      KG/HR
   TOTAL CO2E PRODUCTION         0.00000      KG/HR

                           ***  INPUT DATA  ***

 FRACTION OF FLOW                  STRM=SOLVREC  FRAC=          0.99000

                            ***  RESULTS  ***

 STREAM= SOLPURG1       SPLIT=          0.0100000   KEY=  0    STREAM-ORDER=   2
         SOLVREC                        0.99000           0                    1
```

PURGE2 Block Report

```
 BLOCK:  PURGE2   MODEL: FSPLIT
 ------------------------------
   INLET STREAM:          MESITYL3
   OUTLET STREAMS:        SOLPURG2    MESITYL
   PROPERTY OPTION SET:   NRTL      RENON (NRTL) / IDEAL GAS

                      ***  MASS AND ENERGY BALANCE  ***
                                   IN               OUT        RELATIVE DIFF.
    TOTAL BALANCE
       MOLE(KMOL/HR )            150.558          150.558          0.00000
       MASS(KG/HR    )           18061.2          18061.2          0.00000
       ENTHALPY(CAL/SEC )       -639340.         -639340.         0.182087E-15

                      ***  CO2 EQUIVALENT SUMMARY ***
   FEED STREAMS CO2E             0.00000      KG/HR
   PRODUCT STREAMS CO2E          0.00000      KG/HR
   NET STREAMS CO2E PRODUCTION   0.00000      KG/HR
   UTILITIES CO2E PRODUCTION     0.00000      KG/HR
   TOTAL CO2E PRODUCTION         0.00000      KG/HR

                           ***  INPUT DATA  ***

 FRACTION OF FLOW                  STRM=MESITYL  FRAC=          0.99000

                            ***  RESULTS  ***

 STREAM= SOLPURG2       SPLIT=          0.0100000   KEY=  0    STREAM-ORDER=   2
         MESITYL                        0.99000           0                    1
```

VALVE2 Block Report

```
 BLOCK:  VALVE2   MODEL: VALVE
 -----------------------------
   INLET STREAM:          SOLVENT2
   OUTLET STREAM:         SOLVENT3
   PROPERTY OPTION SET:   NRTL      RENON (NRTL) / IDEAL GAS

                      ***  MASS AND ENERGY BALANCE  ***
                                   IN               OUT        RELATIVE DIFF.
    TOTAL BALANCE
       MOLE(KMOL/HR )            1669.03          1669.03          0.00000
       MASS(KG/HR    )           200409.          200409.          0.00000
       ENTHALPY(CAL/SEC )      -0.713846E+07    -0.713846E+07      0.00000

                      ***  CO2 EQUIVALENT SUMMARY ***
   FEED STREAMS CO2E             0.00000      KG/HR
```

```
    PRODUCT STREAMS CO2E          0.00000      KG/HR
    NET STREAMS CO2E PRODUCTION   0.00000      KG/HR
    UTILITIES CO2E PRODUCTION     0.00000      KG/HR
    TOTAL CO2E PRODUCTION         0.00000      KG/HR

                          ***  INPUT DATA  ***

    VALVE OUTLET PRESSURE     BAR                          1.00000
    VALVE FLOW COEF CALC.                                 NO

                          FLASH SPECIFICATIONS:
    NPHASE                                                 2
    MAX NUMBER OF ITERATIONS                              30
    CONVERGENCE TOLERANCE                                  0.000100000

                          ***  RESULTS  ***

    VALVE PRESSURE DROP       BAR                          1.00000
```

WATERMIXER Block Report

```
 BLOCK:  WATERMIX MODEL: MIXER
 ------------------------------
   INLET STREAMS:          WATEROUT    WATER       W-ETH2
   OUTLET STREAM:          RECWATER
   PROPERTY OPTION SET:    NRTL      RENON (NRTL) / IDEAL GAS

                       ***  MASS AND ENERGY BALANCE  ***
                                    IN               OUT        RELATIVE DIFF.
    TOTAL BALANCE
       MOLE(KMOL/HR )            4564.86          4564.86          0.00000
       MASS(KG/HR   )            83214.8          83214.8         0.174872E-15
       ENTHALPY(CAL/SEC )     -0.865792E+08    -0.865792E+08    -0.172110E-15

                       ***  CO2 EQUIVALENT SUMMARY ***
    FEED STREAMS CO2E             546.878      KG/HR
    PRODUCT STREAMS CO2E          546.878      KG/HR
    NET STREAMS CO2E PRODUCTION   0.00000      KG/HR
    UTILITIES CO2E PRODUCTION     0.00000      KG/HR
    TOTAL CO2E PRODUCTION         0.00000      KG/HR

                          ***  INPUT DATA  ***
   TWO    PHASE      FLASH
   MAXIMUM NO. ITERATIONS                                 30
   CONVERGENCE TOLERANCE                                   0.000100000
   OUTLET PRESSURE:  MINIMUM OF INLET STREAM PRESSURES
```

MIXER1 Block Report

```
BLOCK:  MIXER1   MODEL: MIXER
 ------------------------------
   INLET STREAMS:          SOLVREC     SOLADD1
   OUTLET STREAM:          SOLVEREC
   PROPERTY OPTION SET:    NRTL      RENON (NRTL) / IDEAL GAS

                       ***  MASS AND ENERGY BALANCE  ***
                                    IN               OUT        RELATIVE DIFF.
    TOTAL BALANCE
       MOLE(KMOL/HR )            1663.83          1663,89         0.136123E-15
       MASS(KG/HR   )          1.9998E+05       1.9999E+05       0.483623E-08
       ENTHALPY(CAL/SEC )     -0.839913E+07    -0.839910E+07    -0.354102E-05

                       ***  CO2 EQUIVALENT SUMMARY ***
    FEED STREAMS CO2E             0.00000      KG/HR
    PRODUCT STREAMS CO2E          0.00000      KG/HR
    NET STREAMS CO2E PRODUCTION   0.00000      KG/HR
```

```
 UTILITIES CO2E PRODUCTION      0.00000      KG/HR
 TOTAL CO2E PRODUCTION          0.00000      KG/HR

                        ***  INPUT DATA  ***
TWO    PHASE      FLASH
MAXIMUM NO. ITERATIONS                                    30
CONVERGENCE TOLERANCE                                      0.000100000
OUTLET PRESSURE   BAR                                    1.00000
```

MIXER2 Block Report

```
BLOCK:  MIXER2   MODEL: MIXER
------------------------------
  INLET STREAMS:          MESITYL     SOLADD2
  OUTLET STREAM:          MESTIYLE
  PROPERTY OPTION SET:    NRTL       RENON (NRTL) / IDEAL GAS

                     ***  MASS AND ENERGY BALANCE  ***
                                IN               OUT        RELATIVE DIFF.
 TOTAL BALANCE
    MOLE(KMOL/HR )            149.708          150.000       -0.845219E-08
    MASS(KG/HR   )          1.8052E+04       1.8061E+04      -0.782915E-08
    ENTHALPY(CAL/SEC )       -200556.         -200556.        0.916190E-08

                     ***  CO2 EQUIVALENT SUMMARY ***
 FEED STREAMS CO2E            0.145801      KG/HR
 PRODUCT STREAMS CO2E         0.145801      KG/HR
 NET STREAMS CO2E PRODUCTION -0.113836E-06  KG/HR
 UTILITIES CO2E PRODUCTION     0.00000      KG/HR
 TOTAL CO2E PRODUCTION       -0.113836E-06  KG/HR

                        ***  INPUT DATA  ***
TWO    PHASE      FLASH
MAXIMUM NO. ITERATIONS                                    30
CONVERGENCE TOLERANCE                                      0.000100000
OUTLET PRESSURE   BAR                                    1.00000
```

Appendix C: Vendor Specification Sheets

Start-up

Sales
To: Ariel Shaulson
RE: New submission from Request a Quote

March 31, 2016 at 11:10 AM
Inbox - SEAS Email

S

Hello Ariel,

Thank you for the inquiry. Current pricing below for the 15L vessel assembly:

Part Number: **BV-C1001-15R**
Description: 15L Bioreactor Assembly, Cell Culture
Price each: **$18,703.00**

I've also attached a data sheet for reference. If you wish to receive a formal Quote please let me know the quantities and I'll be happy to provide one.

In the meantime, please contact us with any questions. We look forward to serving you!

Best regards,
Melanie Vaughan
Broadley-James Corporation | 19 Thomas | Irvine, CA 92618 USA
Tel: 949.829.5555 |Fax: 949.829.5560 | www.broadleyjames.com
Office Hours: Monday – Friday, 7:00 AM – 4:00 PM (Pacific Time)
Manufacturer of Sensors, Bioreactors and Process Control Automation

From: Ariel Shaulson [mailto:shaulson@seas.upenn.edu]
Sent: Thursday, March 31, 2016 6:55 AM
To: Sales
Subject: New submission from Request a Quote

Kenneth Murphy
To: Ariel Shaulson
RE: Pricing Inquiry

April 1, 2016 at 2:13 PM

KM

Hello Ariel,
Please see my markings in your original email below. The noted prices should also be acceptable in 2017.
Please note that lead times for the smaller systems may range from 4-8 weeks.
The lead times for the larger systems are approximately 25 weeks.

I'm local the SE PA so if you would ever want to meet and discuss your project in more depth (sizes, utility requirements, etc..) then I can easily visit.
Best regards,

Ken Murphy
Bioprocess Sales Engineer, OH, PA, NY, DE
Eppendorf North America
102 Motor Parkway
Hauppauge, NY 11788

Phone: 800 - 645 - 3050, x2567
Mobile: 267 - 559 - 2524
murphy.k@eppendorf.com

The Smarter Solution
The BioFlo® 320: The next generation universal bioprocess control station
http://www.eppendorf.com/BioFlo320/

From: Ariel Shaulson [mailto:shaulson@seas.upenn.edu]
Sent: Thursday, March 31, 2016 4:53 PM
To: Robyn Seto
Subject: Pricing Inquiry

Hi Mr. Seto,

My name is Ariel Shaulson and I am a Chemical Engineering student currently working on a Senior Design Project that requires the purchase and scale-up of industrial fermentors. I have been going through the Eppendorf catalogue and noticed that your products meet all our requirements and I was wondering if I could have price quotes for the following pieces of equipment:

60mL DASbox Mini Bioreactor System (there is only one system as the DASbox. It uses one vessel. It's working volume is from 60mL to 250mL. Price for a four vessel DASbox is $150,000. Up to three DASboxs equaling to 12 vessels can be controlled by the one PC controller.)
150mL DASbox Mini Bioreactor System
1.5 L BioFlo 115 ($26,000)
15 L BioFlo 510 ($112,000)
150 L BioFlo Pro ($290,000)
1500 L BioFlo Pro ($630,000)

Thank you in advance for your assistance.

Best,

Ariel

Andrew Quebbemann
To: Ariel Shaulson
Applikon Inquiry Follow Up

April 4, 2016 at 1:57 PM
Inbox - SEAS Email

AQ

Hi Ariel,

Thanks for reaching out to us regarding bioreactors. The only estimate I can provide is for a 1500L system. We don't make anything over 2000L. A 1500L system runs about $750,000. Good luck on your project.

Cordially,
Andrew

Andrew Quebbemann
Mid-Atlantic
Applikon Biotechnology, Inc.
Mobile (847) 204-8409
Web www.applikonbio.com
Customer Service (973) 361-5387

applikon BIOTECHNOLOGY
With You Every Step of the Way

d.thiebart@sysbiotech.eu
To: Ariel Shaulson
RE: 150L Pilot-scale bioreactor

April 5, 2016 at 4:31 AM
Inbox - Gmail

D

Dear Ariel,

For a 150L fermenter the budget quote is situated between 165 000€ - 185 000€ depending on the configuration of the equipment.
If you need further information, you can contact me at anytime,

Best Regards
Delphine Fleury

SYSBIOTECH

Delphine Fleury, Sales Engineer
+33 (0)6.77.01.29.62, d.thiebart@sysbiotech.eu

Sysbiotech
16 rue Henri Le Chatelier, 17 180 Périgny – France
+33 (0)5.46.52.51.30, +33 (0)5.46.52.39.58
www.sysbiotech.eu – contact@sysbiotech.eu

New Brunswick BioFlo Pro & CelliGen Pro
Large-scale SIP fermentor and bioreactor
BioFlo Pro: 32 - 2,400 L working volume
CelliGen Pro: 18.8 - 520 L working volume

> Large scale industrial system with full adherence to cGMP and GAMP® guidelines
> Modular design with over a hundred options allows for high level of customization pre and post delivery
> Multiple validation package offerings
> Open piping skid allows for easy accessibility
> NEMA-4 (IP65) rated control cabinet with industry-standard Allen Bradley PLC
> Flush mounted vessel ports for enhanced vessel design and drainability
> Multiple impeller and gas flow options
> Optional validation packages available
> ASME-rated pressure vessel

New Brunswick BioFlo 510 & CelliGen 510
Bench- and pilot-scale SIP fermentor and bioreactor
5.5 - 32 L working volume

> SIP bench and pilot scale reactors designed to meet the needs of R&D through production
> Modular design allows for complete system flexibility
> Add or remove components pre- or post-delivery
> Multiple impeller and gas flow options
> Features intuitive New Brunswick RPC control software and touchscreen interface
> Optional Allen Bradley® PLC
> Integrated load cell for online vessel volume monitoring
> Fully automated SIP sequence for sterilization
> Validation packages available
> 7 additional analog input/output connections for local integration of ancillary equipment
> ASME-rated pressure vessel

DASbox
Parallel mini bioreactor system
60 - 250 mL working volume

> 4-fold parallel system extendable to up to 24 parallel operated glass or single-use bioreactors
> Suitable for cell culture and microbial fermentation
> Compact mini bioreactor system: requires only 7 cm (3 inches) bench space per bioreactor
> Optimal tool for DoE and scale down approaches
> Agitation control supporting overhead-driven Rushton, marine-type or pitched blade impellers
> Innovative liquid-free temperature control system needs no coolant agent supply and supports independent temperature control for each bioreactor
> Accurate monitoring and control of pH, DO and level
> Variable speed pumps for accurate liquid addition and operation in batch, fed-batch, continuous and cyclic perfusion mode
> 4 mass flow controllers per bioreactor allow for individual mixing of air, N_2, O_2 and CO_2 to headspace and/or submerged
> Novel liquid-free Peltier exhaust condenser with easy to handle slide in - slide out activation and deactivation
> DASware control Software for advanced process control
> Compatible with DASware® Software Suite for interconnectivity and bioprocess information management

Clostridia

ATCC

Product Sheet

Clostridium acetobutylicum (ATCC® 824™)

Please read this FIRST

Storage Temp.
Frozen: -80°C or colder
Freeze-Dried: 2°C to 8°C
Live Culture: See Propagation Section

Biosafety Level
1

Intended Use

This product is intended for research use only. It is not intended for any animal or human therapeutic or diagnostic use.

Citation of Strain

If use of this culture results in a scientific publication, it should be cited in that manuscript in the following manner: *Clostridium acetobutylicum* (ATCC® 824™)

American Type Culture Collection
PO Box 1549
Manassas, VA 20108 USA
www.atcc.org

800.638.6597 or 703.365.2700
Fax: 703.365.2750
Email: Tech@atcc.org

Or contact your local distributor

Description

Designation: [CCRC 10639, CCUG 42182, DSM 792, IAM 19013, IFO 13948, JCM 1419, KCTC 1790, L.S. McClung 2291, LMG 5710, McCoy and McClung strain W, NCCB 29024, NCCB 84048, NCIMB 8052, VKM B-1787]
Deposited Name: *Granulobacter pectinovorum* (Stormer) Beijerinck
Product Description: Type strain. Degrades xylan, produces acetone, acidolysin, butyl alcohol [butanol], autobacteriocin, and restriction endonuclease Cac8241. Also used in the assay of p-aminobenzoic acid. Organism used in genome sequencing project.

Propagation

Medium
ATCC® Medium 2107: Modified Reinforced Clostridial Agar/Broth Medium (pre-reduced)
ATCC® Medium 260: Trypticase soy agar/broth with defibrinated sheep blood

Growth Conditions
Temperature: 37°C
Atmosphere: Anaerobic gas mixture, 80% N_2-10% CO_2-10% H_2

Propagation Procedure
1. Open vial according to enclosed instructions or visit www.atcc.org for instructions.
2. Under anaerobic conditions aseptically rehydrate the entire pellet with approximately 0.5 mL of #2107 broth. Aseptically transfer the entire contents to a 5-6 mL tube of #2107 broth. Additional test tubes can be inoculated by transferring 0.5 mL of the primary broth tube to these secondary broth tubes. Best practice dictates the use of pre-reduced media.
3. Use several drops of the primary broth tube to inoculate a #260 plate and/or #260 agar slant.
4. Incubate in an anaerobic atmosphere at 37°C for 24-48 hours. Incubate one agar plate aerobically at 37°C to check for contamination.

ANAEROBIC CONDITIONS:
- Anaerobic conditions for transfer may be obtained by the use of an anaerobic gas chamber or placement of test tubes under a gassing cannula system connected to anaerobic gas.

Anaerobic conditions for incubation may be obtained by any of the following:
- Loose screw caps on test tubes in an anaerobic chamber
- Loose screw caps on test tubes in an activated anaerobic gas pack jar
- Use of sterile butyl rubber stoppers on test tubes so that an anaerobic gas headspace is retained

Notes

Purified genomic DNA of this strain is available as ATCC® 824D-5™.
Additional information on this culture is available on the ATCC® web site at www.atcc.org.

References

References and other information relating to this product are available online at www.atcc.org.

Biosafety Level: 1

Appropriate safety procedures should always be used with this material. Laboratory safety is discussed in the current publication of the *Biosafety in Microbiological and Biomedical Laboratories* from the U.S. Department of Health and Human Services Centers for Disease Control and Prevention and National Institutes for Health.

ATCC Warranty

The viability of ATCC® products is warranted for 30 days from the date of shipment, and is valid only if the product is stored and cultured according to the information included on this product information sheet. ATCC lists the media formulation that has been found to be effective for this strain. While other, unspecified media may also produce satisfactory results, a change in media or the absence of an additive from the ATCC recommended media may affect recovery, growth and/or function of this strain. If an alternative medium

Product Sheet

Clostridium acetobutylicum (ATCC® 824™)

Please read this FIRST

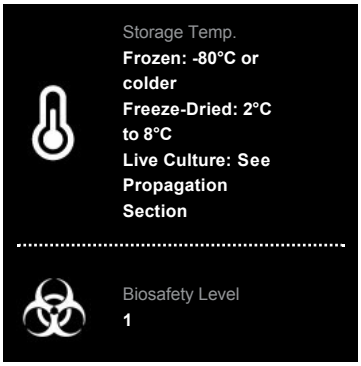

Intended Use

This product is intended for research use only. It is not intended for any animal or human therapeutic or diagnostic use.

Citation of Strain

If use of this culture results in a scientific publication, it should be cited in that manuscript in the following manner: *Clostridium acetobutylicum* (ATCC® 824™)

formulation is used, the ATCC warranty for viability is no longer valid.

Disclaimers

This product is intended for laboratory research purposes only. It is not intended for use in humans.

While ATCC uses reasonable efforts to include accurate and up-to-date information on this product sheet, ATCC makes no warranties or representations as to its accuracy. Citations from scientific literature and patents are provided for informational purposes only. ATCC does not warrant that such information has been confirmed to be accurate.

This product is sent with the condition that you are responsible for its safe storage, handling, and use. ATCC is not liable for any damages or injuries arising from receipt and/or use of this product. While reasonable effort is made to ensure authenticity and reliability of strains on deposit, ATCC is not liable for damages arising from the misidentification or misrepresentation of cultures.

Please see the enclosed Material Transfer Agreement (MTA) for further details regarding the use of this product. The MTA is also available on our Web site at www.atcc.org

Additional information on this culture is available on the ATCC web site at www.atcc.org.

© ATCC 2015. All rights reserved. ATCC is a registered trademark of the American Type Culture Collection. [11/02]

American Type Culture Collection
PO Box 1549
Manassas, VA 20108 USA
www.atcc.org

800.638.6597 or 703.365.2700
Fax: 703.365.2750
Email: Tech@atcc.org

Or contact your local distributor

Activated Carbon Adsorbers

CARBTROL©
CORPORATION

SPECIFICATION
ACTIVATED CARBON ADSORBER
HIGH PRESSURE, HIGH FLOW RATE - LIQUID PHASE

Model:	HP-3400	HP-4100	HP-5200	HP-5800	HP-6500	HP-9300	HP-12700
Design Flow (GPM):	220	270	325	375	425	600	825
Pressure Drop at Design Flow (psi):	1.5	1.5	1.5	1.5	1.5	1.5	1.5
Design Features:							
Carbon:	Liquid phase activated carbon, 8 X 20 mesh, high activity, type CL.						
Carbon Weight (lbs.):	3,400	4,100	5,200	5,800	6,500	9,300	12,700
Construction:	Cylindrical, fiberglass filament wound tank with external UV stabilized clear coat, Sch. 80 PVC internal piping and stainless hardware.						
Max. Working Pressure (psi):	53						
Approximate Dimensions:							
Tank Diameter (in.):	71	79	88	93	99	118	138
Tank Height (in.):	89	95	95	96	99	112	112
Inlet/Outlet:	Inlet and outlet connections are PVC flange.						
Connection Sizes:							
Inlet/Outlet (side):	6"	6"	6"	6"	6"	8"	10"
Cleanout (top):	12" x 16" manway						
Carbon Drain:	3"						
Water Drain:	1"						
Freeboard for Backwashing:	25%						
Backwash Flow Rate (gpm):	330	400	490	560	630	900	1250
Additional Features:	Pressure gauge 10-year limited warranty on tank shell Factory pressure test Vessels are shipped empty with carbon separate for filling in field						
Options:	Butterfly valve manifold for ease of backwashing. Lateral (side) manway opening of 12" x 16" or 8" x 12" for easy changeout. Bag-type pre-filter Maximum working pressure of 87 psi or 116 psi Construction with NSF 61 listed materials Construction with fiberglass reinforced vinyl ester for improved resistance						
Filter Shipping Weight (without media) (lbs.):	1,100	1,300	2,000	2,500	2,900	3,900	5,000
Operating Weight (lbs.):	11,500	14,500	17,500	21,500	27,500	39,900	53,800
Availability:	6 to 8 weeks						

12/21/12
*SP-420,410/#9

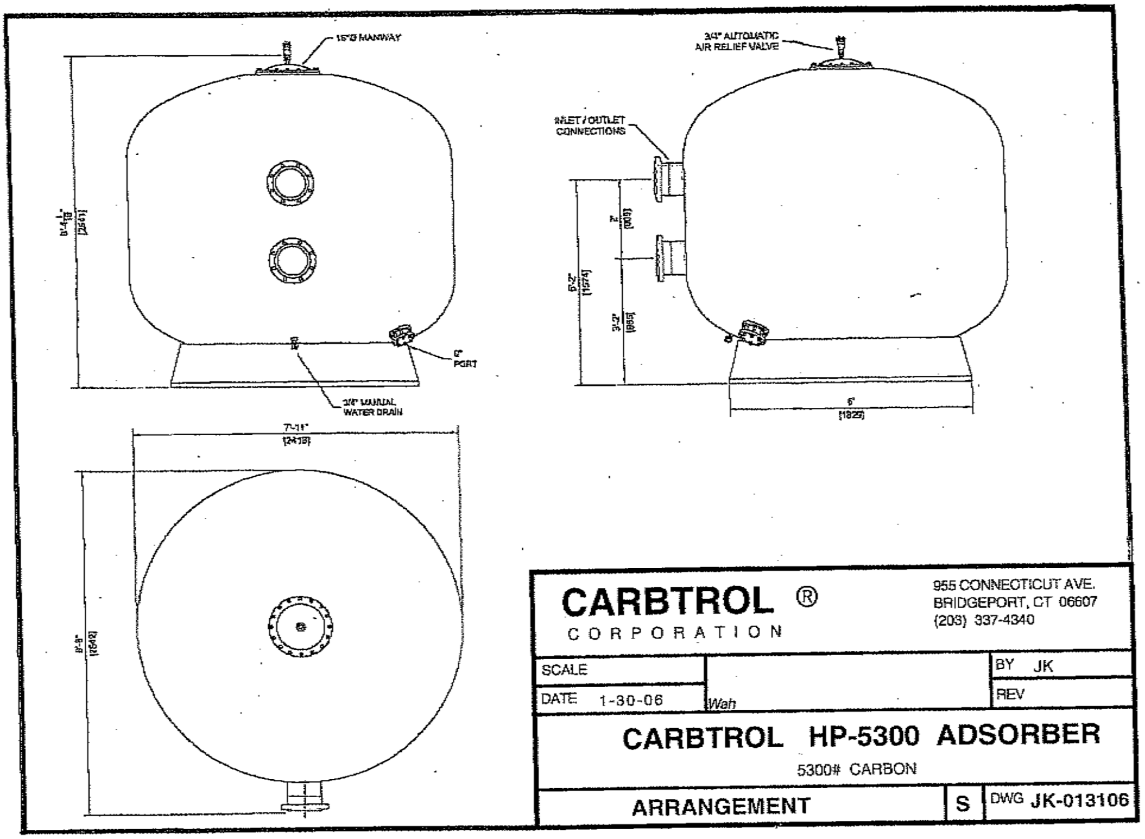
16"Ø MANWAY
3/4" AUTOMATIC AIR RELIEF VALVE
INLET / OUTLET CONNECTIONS
6" PORT
3/4" MANUAL WATER DRAIN
7'-11"
[2418]
CARBTROL ®
CORPORATION
955 CONNECTICUT AVE.
BRIDGEPORT, CT 06607
(203) 337-4340
SCALE
DATE 1-30-06
Wah
BY JK
REV
CARBTROL HP-5300 ADSORBER
5300# CARBON
ARRANGEMENT
S
DWG JK-013106

CARBTROL®

TYPE CL
WATER PURIFICATION CARBON

DESCRIPTION

CARBTROL CL Water Purification Carbon is designed for use in a wide variety of liquid phase treatment applications. It is a broad range adsorbent with balanced adsorption characteristics. CL carbons are particularly effective for the removal of dissolved toxic organics from groundwaters or industrial wastewaters.

SPECIFICATIONS

TYPE:	Granular
BASE MATERIAL:	Coal
SIZE (US Sieve):	8 x 20
IODINE NO.:	1100 (ave.)
APPARENT DENSITY (g/cc):	0.45 to 0.50
MOISTURE (percent):	2
HARDNESS NO.:	90

APPLICATIONS

- Wastewater treatment
- Groundwater treatment
- Industrial process wastewater
- Storm water treatment
- NSF certified carbon for potable water applications

SAFETY

Wet or damp activated carbon may preferentially remove oxygen from confined spaces. If entering a vessel containing activated carbon, standard confined space entry procedures should be followed.

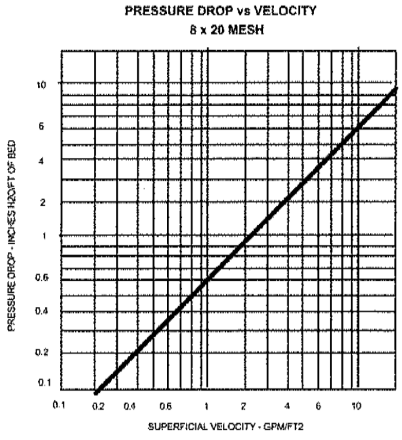

© Copyright 2001 Carbtrol Corporation – 6/16/04 AT-9512/#2

CARBTROL®
CORPORATION
955 Connecticut Ave., Suite 5202
Bridgeport, CT 06607
800-242-1150 Fax: 203-337-4347
www.carbtrol.com info@carbtrol.com

U.S. DEPARTMENT OF LABOR
Occupational Safety and Health Administration
MATERIAL SAFETY DATA SHEET

Prepared by: ARS
Date: 7/1/11

SECTION I

MANUFACTURER'S NAME
Carbtrol Corporation
EMERGENCY TELEPHONE NO.
(203)-337-4340
ADDRESS (Number, Street, City, State & Zip Code)
955 Connecticut Ave, Suite 5202, Bridgeport, CT 06607
CHEMICAL NAME AND SYNONYMS
Activated Carbon
TRADE NAME & SYNONYMS
CHEMICAL FAMILY
Carbon
FORMULA
C

MATERIAL	CAS #	WT. %
ACTIVATED CARBON	7440-44-0	100 %

SECTION II - HAZARDOUS INGREDIENTS*

PAINTS PRESERVATIVES & SOLVENTS	%	TLV (Units)	ALLOYS & METAL COATINGS	%	TLV (Units)
PIGMENTS		N/A	BASE METALS		N/A
CATALYST		N/A	ALLOYS		N/A
VEHICLE		N/A	METALLIC COATINGS		N/A
SOLVENTS		N/A	FILLER METAL PLUS		
ADDITIVES		N/A	COATINGS OR CORE FLUX		N/A
OTHERS			OTHERS		

HAZARDOUS MIXURES OF OTHER LIQUIDS, SOLIDS, OR GASES	%	TLV (Units)

*Chemicals not classified as hazardous according to OSHA guidelines as specified in 29CFR 1915.2 will not be listed although one or more may be a constituent of the product.

SECTION III - PHYSICAL DATA

BOILING POINT (°F) N/A		SPECIFIC GRAVITY (H_2O = 1)	1.8 - 2.1
VAPOR PRESSURE (mm Hg)	N/A	PERCENT VOLATILE BY VOLUME (%)	0.0
VAPOR DENSITY (AIR = 1)	N/A	EVAPORATION RATE (_____ = 1)	N/A
SOLUBILITY IN WATER	Insoluble	pH	5.0 - 8.0
APPEARANCE AND ODOR	Granular or powder, no odor		

SECTION IV - FIRE AND EXPLOSION HAZARD

FLASH POINT (Method used):
Non Flammable
FLAMMABLE LIMITS:
N/A
LEL:
UEL:
EXTINGUISHING MEDIA:
In case of fire, may use foam, CO_2 or dry chemical.
SPECIAL FIRE FIGHTING PROCEDURES:
Exercise caution when responding to any chemical fire. Respiratory protection is essential.
UNUSUAL FIRE AND EXPLOSION HAZARDS
Contact with strong oxidizers, such as ozone or liquid oxygen, may cause rapid combustion.

SECTION V - HEALTH HAZARD DATA

THRESHOLD LIMIT VALUE:
None.
EFFECTS OF OVEREXPOSURE:
None.
EMERGENCY AND FIRST AID PROCEDURES:
Eyes: As with any particulate, flush with water for at least 15 minutes.

SECTION VI - REACTIVITY DATA

STABILITY: UNSTABLE: _____ CONDITIONS TO AVOID:
STABLE: XX
INCOMPATABILITY (Materials to avoid):
Strong oxidizers, such as ozone, liquid oxygen, permanganate, hydrofluoric & nitric acids, etc.
HAZARDOUS DECOMPOSITION PRODUCTS:

HAZARDOUS POLYMERIZATION: MAY OCCUR: _____ CONDITIONS TO AVOID:
WILL NOT OCCUR: XX

SECTION VII - SPILL OR LEAK PROCEDURES

STEPS TO BE TAKEN IN CASE MATERIAL IS RELEASED OR SPILLED:
Sweep up spill and discard in protected refuse container.
WASTE DISPOSAL METHOD:
Dispose of or reactivate in accordance with Local, State and Federal regulations.

SECTION VIII - SPECIAL PROTECTION INFORMATION

RESPIRATORY PROTECTION (Specify type):
Standard precaution against dust; particulate respirator.
VENTILATION: LOCAL EXHAUST: SPECIAL:
Essential during operations in enclosed or confined areas.
MECHANICAL (General): OTHER:

PROTECTIVE GLOVES:
None.
EYE PROTECTION:
Safety goggles or glasses recommended.
OTHER PROTECTIVE EQUIPMENT:
None.

SECTION IX - SPECIAL PRECAUTIONS

PRECAUTIONS TO BE TAKEN IN HANDLING AND STORING:
Avoid contact with eyes.
OTHER PRECAUTIONS:
Wet activated carbon depletes oxygen from the air creating a severe hazard to workers in enclosed or confined areas

SECTION X - HMIS RATINGS

HEALTH - 0 FLAMMABILITY - 0 REACTIVITY - 0

Appendix D: Outside Correspondence

Mr. Bruce Vrana

Bruce.M.Vrana@dupont.com
To: Ariel Shaulson Cc: Joanna Wollman
RE: Biobutanol question

February 15, 2016 at 11:18 AM

B

I'm glad I asked about xylose and arabinose. I'm afraid that I have bad news. There are perhaps 200 corn grain ethanol plants in the U.S. And perhaps 3 corn stover plants that are brand new and in various stages of start-up, the largest of which is DuPont's 30MM gallon plant. I don't think I would base my competitive intelligence effort on Cobalt on a corn stover plant with a capacity that does not exist, despite the fact that NREL has published a detailed design. Fortunately, you've learned a lot along the way, and I don't think that switching the design of the plant you start with will slow you down any more than dealing with the problems of a stover plant design would – what to do with the lignin, the unconverted xylose, etc.

I would strongly encourage you to switch to a corn grain plant as the base design. If you search on the terms "usda corn ethanol plant design" (without the quotes), the first reference is a publication by Kwiatkowski on a SuperPro model of a corn ethanol plant. You can also find this reference from the Intelligen web site at http://www.intelligen.com/literature.html which links to the Kwiatkowski paper. This is a reasonable model of much of the dry grind ethanol process and includes a SuperPro Designer model that will work with their evaluation version of the software. Note, however, that SuperPro does not handle VLE rigorously and thus is not suitable for designing the ABE separations. Also note that (I believe) the evaluation version cannot print or save files, so this is best used as a learning tool for the ethanol process, rather than a design tool. I'm not sure if Penn has access to the full version of SuperPro, but if it does, you could do much of the calculation in SuperPro, perhaps just moving to Aspen Plus for your new separation scheme.

Another reasonable reference is The Renewable Fuels Association web site, which has a good description of the fuel ethanol process and the industry. http://www.ethanolrfa.org

The Kriatkowski paper has some references to other USDA and NREL papers on corn ethanol plant designs that may be helpful as well.

Sorry to deliver this news, but again, I don't think this will result in much or any lost time, as you will be able to use all the work you have done to date.

Bruce

Appendix E: Material Safety Data Sheets

This appendix contains MSDS forms for all major materials in our process. They are in the following order:

Butanol
Acetone
Ethanol
Acetic Acid
Butyric Acid
Carbon Dioxide
Hydrogen
Oxygen
Nitrogen
Glucose
Lime
Ammonia
Alpha-amylase
Clostridia bacteria (comparable product)
Nutrients (comparable product)

Material Safety Data Sheet
1-Butanol MSDS

Section 1: Chemical Product and Company Identification

Product Name: 1-Butanol

Catalog Codes: SLB3157, SLB1489

CAS#: 71-36-3

RTECS: EO1400000

TSCA: TSCA 8(b) inventory: 1-Butanol

CI#: Not applicable.

Synonym: Propylcarbinol

Chemical Name: N-Butyl alcohol

Chemical Formula: CH3(CH2)2CH2OH

Contact Information:

Sciencelab.com, Inc.
14025 Smith Rd.
Houston, Texas 77396

US Sales: **1-800-901-7247**
International Sales: **1-281-441-4400**

Order Online: ScienceLab.com

CHEMTREC (24HR Emergency Telephone), call: 1-800-424-9300

International CHEMTREC, call: 1-703-527-3887

For non-emergency assistance, call: 1-281-441-4400

Section 2: Composition and Information on Ingredients

Composition:

Name	CAS #	% by Weight
{1-}Butanol	71-36-3	100

Toxicological Data on Ingredients: 1-Butanol: ORAL (LD50): Acute: 790 mg/kg [Rat.]. DERMAL (LD50): Acute: 3400 mg/kg [Rabbit.].

Section 3: Hazards Identification

Potential Acute Health Effects:
Very hazardous in case of skin contact (irritant, permeator), of eye contact (irritant), of ingestion, of inhalation. Slightly hazardous in case of skin contact (sensitizer). Inflammation of the eye is characterized by redness, watering, and itching. Skin inflammation is characterized by itching, scaling, reddening, or, occasionally, blistering.

Potential Chronic Health Effects:
CARCINOGENIC EFFECTS: Not available. MUTAGENIC EFFECTS: Not available. TERATOGENIC EFFECTS: Not available. DEVELOPMENTAL TOXICITY: Not available. Repeated or prolonged exposure is not known to aggravate medical condition.

Section 4: First Aid Measures

Eye Contact:
Check for and remove any contact lenses. Immediately flush eyes with running water for at least 15 minutes, keeping eyelids open. Cold water may be used. Get medical attention immediately.

Skin Contact:
In case of contact, immediately flush skin with plenty of water for at least 15 minutes while removing contaminated clothing and shoes. Cover the irritated skin with an emollient. Cold water may be used.Wash clothing before reuse. Thoroughly clean shoes before reuse. Get medical attention immediately.

Serious Skin Contact:
Wash with a disinfectant soap and cover the contaminated skin with an anti-bacterial cream. Seek immediate medical attention.

Inhalation:
If inhaled, remove to fresh air. If not breathing, give artificial respiration. If breathing is difficult, give oxygen. Get medical attention if symptoms appear.

Serious Inhalation:
Evacuate the victim to a safe area as soon as possible. Loosen tight clothing such as a collar, tie, belt or waistband. If breathing is difficult, administer oxygen. If the victim is not breathing, perform mouth-to-mouth resuscitation. Seek medical attention.

Ingestion:
Do NOT induce vomiting unless directed to do so by medical personnel. Never give anything by mouth to an unconscious person. If large quantities of this material are swallowed, call a physician immediately. Loosen tight clothing such as a collar, tie, belt or waistband.

Serious Ingestion: Not available.

Section 5: Fire and Explosion Data

Flammability of the Product: Flammable.

Auto-Ignition Temperature: 343°C (649.4°F)

Flash Points: CLOSED CUP: 28.9°C (84°F). OPEN CUP: 36.1°C (97°F) (Cleveland).

Flammable Limits: LOWER: 1.4% UPPER: 11.2%

Products of Combustion: These products are carbon oxides (CO, CO2).

Fire Hazards in Presence of Various Substances:
Highly flammable in presence of open flames and sparks. Flammable in presence of heat, of oxidizing materials, of reducing materials, of combustible materials.

Explosion Hazards in Presence of Various Substances:
Risks of explosion of the product in presence of mechanical impact: Not available. Risks of explosion of the product in presence of static discharge: Not available.

Fire Fighting Media and Instructions:
Flammable liquid, soluble or dispersed in water. SMALL FIRE: Use DRY chemical powder. LARGE FIRE: Use alcohol foam, water spray or fog. Cool containing vessels with water jet in order to prevent pressure build-up, autoignition or explosion.

Special Remarks on Fire Hazards: May form explosive mixtures with air. CAUTION: MAY BURN WITH NEAR INVISIBLE FLAME

Special Remarks on Explosion Hazards: Not available.

Section 6: Accidental Release Measures

Small Spill:
Dilute with water and mop up, or absorb with an inert dry material and place in an appropriate waste disposal container.

Large Spill:

Flammable liquid. Keep away from heat. Keep away from sources of ignition. Stop leak if without risk. Absorb with DRY earth, sand or other non-combustible material. Do not touch spilled material. Prevent entry into sewers, basements or confined areas; dike if needed. Be careful that the product is not present at a concentration level above TLV. Check TLV on the MSDS and with local authorities.

Section 7: Handling and Storage

Precautions:
Keep away from heat. Keep away from sources of ignition. Ground all equipment containing material. Do not ingest. Do not breathe gas/fumes/ vapor/spray. In case of insufficient ventilation, wear suitable respiratory equipment. If ingested, seek medical advice immediately and show the container or the label. Avoid contact with skin and eyes. Keep away from incompatibles such as oxidizing agents, reducing agents.

Storage:
Store in a segregated and approved area. Keep container in a cool, well-ventilated area. Keep container tightly closed and sealed until ready for use. Avoid all possible sources of ignition (spark or flame).

Section 8: Exposure Controls/Personal Protection

Engineering Controls:
Provide exhaust ventilation or other engineering controls to keep the airborne concentrations of vapors below their respective threshold limit value. Ensure that eyewash stations and safety showers are proximal to the work-station location.

Personal Protection:
Splash goggles. Lab coat. Vapor respirator. Be sure to use an approved/certified respirator or equivalent. Gloves.

Personal Protection in Case of a Large Spill:
Splash goggles. Full suit. Vapor respirator. Boots. Gloves. A self contained breathing apparatus should be used to avoid inhalation of the product. Suggested protective clothing might not be sufficient; consult a specialist BEFORE handling this product.

Exposure Limits:
CEIL: 152 (mg/m3) Consult local authorities for acceptable exposure limits.

Section 9: Physical and Chemical Properties

Physical state and appearance: Liquid. (Z)

Odor: Vinous. (Slight.)

Taste: Not available.

Molecular Weight: 74.12g/mole

Color: Colorless.

pH (1% soln/water): Not available.

Boiling Point: 117.7°C (243.9°F)

Melting Point: -89.5°C (-129.1°F)

Critical Temperature: Not available.

Specific Gravity: 0.81(Water = 1)

Vapor Pressure: 0.6 kPa (@ 20°C)

Vapor Density: 2.55 (Air = 1)

Volatility: Not available.

Odor Threshold: 1.2 ppm

Water/Oil Dist. Coeff.: Not available.

Ionicity (in Water): Not available.

Dispersion Properties: See solubility in water, methanol, diethyl ether, n-octanol.

Solubility:
Easily soluble in methanol, diethyl ether. Partially soluble in cold water, hot water, n-octanol.

Section 10: Stability and Reactivity Data

Stability: The product is stable.

Instability Temperature: Not available.

Conditions of Instability: Not available.

Incompatibility with various substances:
Highly reactive with oxidizing agents, reducing agents. Slightly reactive to reactive with organic materials, acids, alkalis.

Corrosivity: Non-corrosive in presence of glass.

Special Remarks on Reactivity: Not available.

Special Remarks on Corrosivity: Not available.

Polymerization: Will not occur.

Section 11: Toxicological Information

Routes of Entry: Dermal contact. Eye contact. Inhalation. Ingestion.

Toxicity to Animals:
WARNING: THE LC50 VALUES HEREUNDER ARE ESTIMATED ON THE BASIS OF A 4-HOUR EXPOSURE. Acute oral toxicity (LD50): 790 mg/kg [Rat.]. Acute dermal toxicity (LD50): 3400 mg/kg [Rabbit.]. Acute toxicity of the vapor (LC50): 8000 4 hours [Rat.].

Chronic Effects on Humans: Not available.

Other Toxic Effects on Humans:
Very hazardous in case of skin contact (irritant, permeator), of ingestion, of inhalation. Slightly hazardous in case of skin contact (sensitizer).

Special Remarks on Toxicity to Animals: Not available.

Special Remarks on Chronic Effects on Humans: Can cause gastrointestinal disturbances.

Special Remarks on other Toxic Effects on Humans: Exposure can cause nausea, headache and vomiting.

Section 12: Ecological Information

Ecotoxicity: Not available.

BOD5 and COD: Not available.

Products of Biodegradation:
Possibly hazardous short term degradation products are not likely. However, long term degradation products may arise.

Toxicity of the Products of Biodegradation: The products of degradation are more toxic.

Special Remarks on the Products of Biodegradation: Not available.

Section 13: Disposal Considerations

Waste Disposal:

Section 14: Transport Information

DOT Classification: CLASS 3: Flammable liquid.

Identification: : Butanol UNNA: UN1120 PG: III

Special Provisions for Transport: Not available.

Section 15: Other Regulatory Information

Federal and State Regulations:
Pennsylvania RTK: 1-Butanol Massachusetts RTK: 1-Butanol TSCA 8(b) inventory: 1-Butanol

Other Regulations: OSHA: Hazardous by definition of Hazard Communication Standard (29 CFR 1910.1200).

Other Classifications:

WHMIS (Canada):
CLASS B-2: Flammable liquid with a flash point lower than 37.8°C (100°F). CLASS D-2B: Material causing other toxic effects (TOXIC).

DSCL (EEC):
R10- Flammable. R22- Harmful if swallowed. R38- Irritating to skin. R41- Risk of serious damage to eyes.

HMIS (U.S.A.):

Health Hazard: 1

Fire Hazard: 3

Reactivity: 0

Personal Protection: h

National Fire Protection Association (U.S.A.):

Health: 1

Flammability: 3

Reactivity: 0

Specific hazard:

Protective Equipment:
Gloves. Lab coat. Vapor respirator. Be sure to use an approved/certified respirator or equivalent. Wear appropriate respirator when ventilation is inadequate. Splash goggles.

Section 16: Other Information

References: -Manufacturer's Material Safety Data Sheet.

Other Special Considerations: Not available.

Created: 10/10/2005 08:15 PM

Last Updated: 05/21/2013 12:00 PM

The information above is believed to be accurate and represents the best information currently available to us. However, we make no warranty of merchantability or any other warranty, express or implied, with respect to such information, and we assume no liability resulting from its use. Users should make their own investigations to determine the suitability of the information for their particular purposes. In no event shall ScienceLab.com be liable for any claims, losses, or damages of any third party or for lost profits or any special, indirect, incidental, consequential or exemplary damages, howsoever arising, even if ScienceLab.com has been advised of the possibility of such damages.

ScienceLab.com
Chemicals & Laboratory Equipment

Health	2
Fire	3
Reactivity	0
Personal Protection	H

Material Safety Data Sheet
Acetone MSDS

Section 1: Chemical Product and Company Identification

Product Name: Acetone

Catalog Codes: SLA3502, SLA1645, SLA3151, SLA3808

CAS#: 67-64-1

RTECS: AL3150000

TSCA: TSCA 8(b) inventory: Acetone

CI#: Not applicable.

Synonym: 2-propanone; Dimethyl Ketone; Dimethylformaldehyde; Pyroacetic Acid

Chemical Name: Acetone

Chemical Formula: C3-H6-O

Contact Information:

Sciencelab.com, Inc.
14025 Smith Rd.
Houston, Texas 77396

US Sales: **1-800-901-7247**
International Sales: **1-281-441-4400**

Order Online: ScienceLab.com

CHEMTREC (24HR Emergency Telephone), call: 1-800-424-9300

International CHEMTREC, call: 1-703-527-3887

For non-emergency assistance, call: 1-281-441-4400

Section 2: Composition and Information on Ingredients

Composition:

Name	CAS #	% by Weight
Acetone	67-64-1	100

Toxicological Data on Ingredients: Acetone: ORAL (LD50): Acute: 5800 mg/kg [Rat]. 3000 mg/kg [Mouse]. 5340 mg/kg [Rabbit]. VAPOR (LC50): Acute: 50100 mg/m 8 hours [Rat]. 44000 mg/m 4 hours [Mouse].

Section 3: Hazards Identification

Potential Acute Health Effects:
Hazardous in case of skin contact (irritant), of eye contact (irritant), of ingestion, of inhalation. Slightly hazardous in case of skin contact (permeator).

Potential Chronic Health Effects:
CARCINOGENIC EFFECTS: A4 (Not classifiable for human or animal.) by ACGIH. MUTAGENIC EFFECTS: Not available. TERATOGENIC EFFECTS: Not available. DEVELOPMENTAL TOXICITY: Classified Reproductive system/toxin/female, Reproductive system/toxin/male [SUSPECTED]. The substance is toxic to central nervous system (CNS). The substance may be toxic to kidneys, the reproductive system, liver, skin. Repeated or prolonged exposure to the substance can produce target organs damage.

Section 4: First Aid Measures

Eye Contact:
Check for and remove any contact lenses. Immediately flush eyes with running water for at least 15 minutes, keeping eyelids open. Cold water may be used. Get medical attention.

Skin Contact:
In case of contact, immediately flush skin with plenty of water. Cover the irritated skin with an emollient. Remove contaminated clothing and shoes. Cold water may be used.Wash clothing before reuse. Thoroughly clean shoes before reuse. Get medical attention.

Serious Skin Contact:
Wash with a disinfectant soap and cover the contaminated skin with an anti-bacterial cream. Seek medical attention.

Inhalation:
If inhaled, remove to fresh air. If not breathing, give artificial respiration. If breathing is difficult, give oxygen. Get medical attention if symptoms appear.

Serious Inhalation:
Evacuate the victim to a safe area as soon as possible. Loosen tight clothing such as a collar, tie, belt or waistband. If breathing is difficult, administer oxygen. If the victim is not breathing, perform mouth-to-mouth resuscitation. Seek medical attention.

Ingestion:
Do NOT induce vomiting unless directed to do so by medical personnel. Never give anything by mouth to an unconscious person. Loosen tight clothing such as a collar, tie, belt or waistband. Get medical attention if symptoms appear.

Serious Ingestion: Not available.

Section 5: Fire and Explosion Data

Flammability of the Product: Flammable.

Auto-Ignition Temperature: 465°C (869°F)

Flash Points: CLOSED CUP: -20°C (-4°F). OPEN CUP: -9°C (15.8°F) (Cleveland).

Flammable Limits: LOWER: 2.6% UPPER: 12.8%

Products of Combustion: These products are carbon oxides (CO, CO2).

Fire Hazards in Presence of Various Substances: Highly flammable in presence of open flames and sparks, of heat.

Explosion Hazards in Presence of Various Substances:
Risks of explosion of the product in presence of mechanical impact: Not available. Slightly explosive in presence of open flames and sparks, of oxidizing materials, of acids.

Fire Fighting Media and Instructions:
Flammable liquid, soluble or dispersed in water. SMALL FIRE: Use DRY chemical powder. LARGE FIRE: Use alcohol foam, water spray or fog.

Special Remarks on Fire Hazards: Vapor may travel considerable distance to source of ignition and flash back.

Special Remarks on Explosion Hazards:
Forms explosive mixtures with hydrogen peroxide, acetic acid, nitric acid, nitric acid + sulfuric acid, chromic anydride, chromyl chloride, nitrosyl chloride, hexachloromelamine, nitrosyl perchlorate, nitryl perchlorate, permonosulfuric acid, thiodiglycol + hydrogen peroxide, potassium ter-butoxide, sulfur dichloride, 1-methyl-1,3-butadiene, bromoform, carbon, air, chloroform, thitriazylperchlorate.

Section 6: Accidental Release Measures

Small Spill:
Dilute with water and mop up, or absorb with an inert dry material and place in an appropriate waste disposal container.

Large Spill:
Flammable liquid. Keep away from heat. Keep away from sources of ignition. Stop leak if without risk. Absorb with DRY earth, sand or other non-combustible material. Do not touch spilled material. Prevent entry into sewers, basements or confined areas; dike if needed. Be careful that the product is not present at a concentration level above TLV. Check TLV on the MSDS and with local authorities.

Section 7: Handling and Storage

Precautions:
Keep locked up.. Keep away from heat. Keep away from sources of ignition. Ground all equipment containing material. Do not ingest. Do not breathe gas/fumes/ vapor/spray. Wear suitable protective clothing. In case of insufficient ventilation, wear suitable respiratory equipment. If ingested, seek medical advice immediately and show the container or the label. Avoid contact with skin and eyes. Keep away from incompatibles such as oxidizing agents, reducing agents, acids, alkalis.

Storage:
Store in a segregated and approved area (flammables area) . Keep container in a cool, well-ventilated area. Keep container tightly closed and sealed until ready for use. Keep away from direct sunlight and heat and avoid all possible sources of ignition (spark or flame).

Section 8: Exposure Controls/Personal Protection

Engineering Controls:
Provide exhaust ventilation or other engineering controls to keep the airborne concentrations of vapors below their respective threshold limit value. Ensure that eyewash stations and safety showers are proximal to the work-station location.

Personal Protection:
Splash goggles. Lab coat. Vapor respirator. Be sure to use an approved/certified respirator or equivalent. Gloves.

Personal Protection in Case of a Large Spill:
Splash goggles. Full suit. Vapor respirator. Boots. Gloves. A self contained breathing apparatus should be used to avoid inhalation of the product. Suggested protective clothing might not be sufficient; consult a specialist BEFORE handling this product.

Exposure Limits:
TWA: 500 STEL: 750 (ppm) from ACGIH (TLV) [United States] TWA: 750 STEL: 1000 (ppm) from OSHA (PEL) [United States] TWA: 500 STEL: 1000 [Austalia] TWA: 1185 STEL: 2375 (mg/m3) [Australia] TWA: 750 STEL: 1500 (ppm) [United Kingdom (UK)] TWA: 1810 STEL: 3620 (mg/m3) [United Kingdom (UK)] TWA: 1800 STEL: 2400 from OSHA (PEL) [United States]Consult local authorities for acceptable exposure limits.

Section 9: Physical and Chemical Properties

Physical state and appearance: Liquid.

Odor: Fruity. Mint-like. Fragrant. Ethereal

Taste: Pungent, Sweetish

Molecular Weight: 58.08 g/mole

Color: Colorless. Clear

pH (1% soln/water): Not available.

Boiling Point: 56.2°C (133.2°F)

Melting Point: -95.35 (-139.6°F)

Critical Temperature: 235°C (455°F)

Specific Gravity: 0.79 (Water = 1)

Vapor Pressure: 24 kPa (@ 20°C)

Vapor Density: 2 (Air = 1)

Volatility: Not available.

Odor Threshold: 62 ppm

Water/Oil Dist. Coeff.: The product is more soluble in water; log(oil/water) = -0.2

Ionicity (in Water): Not available.

Dispersion Properties: See solubility in water.

Solubility: Easily soluble in cold water, hot water.

Section 10: Stability and Reactivity Data

Stability: The product is stable.

Instability Temperature: Not available.

Conditions of Instability: Excess heat, ignition sources, exposure to moisture, air, or water, incompatible materials.

Incompatibility with various substances: Reactive with oxidizing agents, reducing agents, acids, alkalis.

Corrosivity: Non-corrosive in presence of glass.

Special Remarks on Reactivity: Not available.

Special Remarks on Corrosivity: Not available.

Polymerization: Will not occur.

Section 11: Toxicological Information

Routes of Entry: Absorbed through skin. Dermal contact. Eye contact. Inhalation.

Toxicity to Animals:
WARNING: THE LC50 VALUES HEREUNDER ARE ESTIMATED ON THE BASIS OF A 4-HOUR EXPOSURE. Acute oral toxicity (LD50): 3000 mg/kg [Mouse]. Acute toxicity of the vapor (LC50): 44000 mg/m3 4 hours [Mouse].

Chronic Effects on Humans:
CARCINOGENIC EFFECTS: A4 (Not classifiable for human or animal.) by ACGIH. DEVELOPMENTAL TOXICITY: Classified Reproductive system/toxin/female, Reproductive system/toxin/male [SUSPECTED]. Causes damage to the following organs: central nervous system (CNS). May cause damage to the following organs: kidneys, the reproductive system, liver, skin.

Other Toxic Effects on Humans:
Hazardous in case of skin contact (irritant), of ingestion, of inhalation. Slightly hazardous in case of skin contact (permeator).

Special Remarks on Toxicity to Animals: Not available.

Special Remarks on Chronic Effects on Humans:
May affect genetic material (mutagenicity) based on studies with yeast (S. cerevisiae), bacteria, and hamster fibroblast cells. May cause reproductive effects (fertility) based upon animal studies. May contain trace amounts of benzene and formaldehyde which may cancer and birth defects. Human: passes the placental barrier.

Special Remarks on other Toxic Effects on Humans:
Acute Potential Health Effects: Skin: May cause skin irritation. May be harmful if absorbed through the skin. Eyes: Causes eye irritation, characterized by a burning sensation, redness, tearing, inflammation, and possible corneal injury. Inhalation: Inhalation at high concentrations affects the sense organs, brain and causes respiratory tract irritation. It also may affect the Central Nervous System (behavior) characterized by dizziness, drowsiness, confusion, headache, muscle weakeness, and possibly motor incoordination, speech abnormalities, narcotic effects and coma. Inhalation may also affect the gastrointestinal tract (nausea, vomiting). Ingestion: May cause irritation of the digestive (gastrointestinal) tract (nausea, vomiting). It may also

affect the Central Nevous System (behavior), characterized by depression, fatigue, excitement, stupor, coma, headache, altered sleep time, ataxia, tremors as well at the blood, liver, and urinary system (kidney, bladder, ureter) and endocrine system. May also have musculoskeletal effects. Chronic Potential Health Effects: Skin: May cause dermatitis. Eyes: Eye irritation.

Section 12: Ecological Information

Ecotoxicity:
Ecotoxicity in water (LC50): 5540 mg/l 96 hours [Trout]. 8300 mg/l 96 hours [Bluegill]. 7500 mg/l 96 hours [Fatthead Minnow]. 0.1 ppm any hours [Water flea].

BOD5 and COD: Not available.

Products of Biodegradation:
Possibly hazardous short term degradation products are not likely. However, long term degradation products may arise.

Toxicity of the Products of Biodegradation: The product itself and its products of degradation are not toxic.

Special Remarks on the Products of Biodegradation: Not available.

Section 13: Disposal Considerations

Waste Disposal:
Waste must be disposed of in accordance with federal, state and local environmental control regulations.

Section 14: Transport Information

DOT Classification: CLASS 3: Flammable liquid.

Identification: : Acetone UNNA: 1090 PG: II

Special Provisions for Transport: Not available.

Section 15: Other Regulatory Information

Federal and State Regulations:
California prop. 65: This product contains the following ingredients for which the State of California has found to cause reproductive harm (male) which would require a warning under the statute: Benzene California prop. 65: This product contains the following ingredients for which the State of California has found to cause birth defects which would require a warning under the statute: Benzene California prop. 65: This product contains the following ingredients for which the State of California has found to cause cancer which would require a warning under the statute: Benzene, Formaldehyde Connecticut hazardous material survey.: Acetone Illinois toxic substances disclosure to employee act: Acetone Illinois chemical safety act: Acetone New York release reporting list: Acetone Rhode Island RTK hazardous substances: Acetone Pennsylvania RTK: Acetone Florida: Acetone Minnesota: Acetone Massachusetts RTK: Acetone Massachusetts spill list: Acetone New Jersey: Acetone New Jersey spill list: Acetone Louisiana spill reporting: Acetone California List of Hazardous Substances (8 CCR 339): Acetone TSCA 8(b) inventory: Acetone TSCA 4(a) final test rules: Acetone TSCA 8(a) IUR: Acetone

Other Regulations:
OSHA: Hazardous by definition of Hazard Communication Standard (29 CFR 1910.1200). EINECS: This product is on the European Inventory of Existing Commercial Chemical Substances.

Other Classifications:

WHMIS (Canada):
CLASS B-2: Flammable liquid with a flash point lower than 37.8°C (100°F). CLASS D-2B: Material causing other toxic effects (TOXIC).

DSCL (EEC):
R11- Highly flammable. R36- Irritating to eyes. S9- Keep container in a well-ventilated place. S16- Keep away from sources of ignition - No smoking. S26- In case of contact with eyes, rinse immediately with plenty of water and seek medical advice.

HMIS (U.S.A.):

Health Hazard: 2

Fire Hazard: 3

Reactivity: 0

Personal Protection: h

National Fire Protection Association (U.S.A.):

Health: 1

Flammability: 3

Reactivity: 0

Specific hazard:

Protective Equipment:
Gloves. Lab coat. Vapor respirator. Be sure to use an approved/certified respirator or equivalent. Wear appropriate respirator when ventilation is inadequate. Splash goggles.

Section 16: Other Information

References:
-Material safety data sheet issued by: la Commission de la SantÃ© et de la SÃ©curitÃ© du Travail du QuÃ©bec. -The Sigma-Aldrich Library of Chemical Safety Data, Edition II. -Hawley, G.G.. The Condensed Chemical Dictionary, 11e ed., New York N.Y., Van Nostrand Reinold, 1987. LOLI, RTECS, HSDB databases. Other MSDSs

Other Special Considerations: Not available.

Created: 10/10/2005 08:13 PM

Last Updated: 05/21/2013 12:00 PM

The information above is believed to be accurate and represents the best information currently available to us. However, we make no warranty of merchantability or any other warranty, express or implied, with respect to such information, and we assume no liability resulting from its use. Users should make their own investigations to determine the suitability of the information for their particular purposes. In no event shall ScienceLab.com be liable for any claims, losses, or damages of any third party or for lost profits or any special, indirect, incidental, consequential or exemplary damages, howsoever arising, even if ScienceLab.com has been advised of the possibility of such damages.

ScienceLab.com
Chemicals & Laboratory Equipment

Health	2
Fire	3
Reactivity	0
Personal Protection	E

Material Safety Data Sheet
Ethyl alcohol 200 Proof MSDS

Section 1: Chemical Product and Company Identification

Product Name: Ethyl alcohol 200 Proof

Catalog Codes: SLE2248, SLE1357

CAS#: 64-17-5

RTECS: KQ6300000

TSCA: TSCA 8(b) inventory: Ethyl alcohol 200 Proof

CI#: Not applicable.

Synonym: Ethanol; Absolute Ethanol; Alcohol; Ethanol 200 proof; Ethyl Alcohol, Anhydrous; Ethanol, undenatured; Dehydrated Alcohol; Alcohol

Chemical Name: Ethyl Alcohol

Chemical Formula: CH3CH2OH

Contact Information:

Sciencelab.com, Inc.
14025 Smith Rd.
Houston, Texas 77396

US Sales: **1-800-901-7247**
International Sales: **1-281-441-4400**
Order Online: ScienceLab.com

CHEMTREC (24HR Emergency Telephone), call: 1-800-424-9300

International CHEMTREC, call: 1-703-527-3887

For non-emergency assistance, call: 1-281-441-4400

Section 2: Composition and Information on Ingredients

Composition:

Name	CAS #	% by Weight
Ethyl alcohol 200 Proof	64-17-5	100

Toxicological Data on Ingredients: Ethyl alcohol 200 Proof: ORAL (LD50): Acute: 7060 mg/kg [Rat]. 3450 mg/kg [Mouse]. VAPOR (LC50): Acute: 20000 ppm 8 hours [Rat]. 39000 mg/m 4 hours [Mouse].

Section 3: Hazards Identification

Potential Acute Health Effects:
Hazardous in case of skin contact (irritant), of eye contact (irritant), of inhalation. Slightly hazardous in case of skin contact (permeator), of ingestion.

Potential Chronic Health Effects:
Slightly hazardous in case of skin contact (sensitizer). CARCINOGENIC EFFECTS: A4 (Not classifiable for human or animal.) by ACGIH. MUTAGENIC EFFECTS: Mutagenic for mammalian somatic cells. Mutagenic for bacteria and/or yeast. TERATOGENIC EFFECTS: Classified PROVEN for human. DEVELOPMENTAL TOXICITY: Classified Development toxin [PROVEN]. Classified Reproductive system/toxin/female, Reproductive system/toxin/male [POSSIBLE]. The substance is toxic to blood, the reproductive system, liver, upper respiratory tract, skin, central nervous system (CNS). Repeated or prolonged exposure to the substance can produce target organs damage.

Section 4: First Aid Measures

Eye Contact:
Check for and remove any contact lenses. Immediately flush eyes with running water for at least 15 minutes, keeping eyelids open. Cold water may be used. Get medical attention.

Skin Contact:
In case of contact, immediately flush skin with plenty of water. Cover the irritated skin with an emollient. Remove contaminated clothing and shoes. Cold water may be used.Wash clothing before reuse. Thoroughly clean shoes before reuse. Get medical attention.

Serious Skin Contact:
Wash with a disinfectant soap and cover the contaminated skin with an anti-bacterial cream. Seek medical attention.

Inhalation:
If inhaled, remove to fresh air. If not breathing, give artificial respiration. If breathing is difficult, give oxygen. Get medical attention if symptoms appear.

Serious Inhalation:
Evacuate the victim to a safe area as soon as possible. Loosen tight clothing such as a collar, tie, belt or waistband. If breathing is difficult, administer oxygen. If the victim is not breathing, perform mouth-to-mouth resuscitation. Seek medical attention.

Ingestion:
Do NOT induce vomiting unless directed to do so by medical personnel. Never give anything by mouth to an unconscious person. Loosen tight clothing such as a collar, tie, belt or waistband. Get medical attention if symptoms appear.

Serious Ingestion: Not available.

Section 5: Fire and Explosion Data

Flammability of the Product: Flammable.

Auto-Ignition Temperature: 363°C (685.4°F)

Flash Points: CLOSED CUP: 12.78°C (55°F). OPEN CUP: 17.78°C (64°F) (Cleveland).

Flammable Limits: LOWER: 3.3% UPPER: 19%

Products of Combustion: These products are carbon oxides (CO, CO2).

Fire Hazards in Presence of Various Substances:
Highly flammable in presence of open flames and sparks, of heat. Slightly flammable to flammable in presence of oxidizing materials.

Explosion Hazards in Presence of Various Substances:
Risks of explosion of the product in presence of mechanical impact: Not available. Slightly explosive in presence of open flames and sparks, of heat, of oxidizing materials, of acids.

Fire Fighting Media and Instructions:
Flammable liquid, soluble or dispersed in water. SMALL FIRE: Use DRY chemical powder. LARGE FIRE: Use alcohol foam, water spray or fog.

Special Remarks on Fire Hazards:
Containers should be grounded. CAUTION: MAY BURN WITH NEAR INVISIBLE FLAME Vapor may travel considerable distance to source of ignition and flash back. May form explosive mixtures with air. Contact with Bromine pentafluoride is likely to cause fire or explosion. Ethanol ignites on contact with chromyl chloride. Ethanol ignites on contact with iodine heptafluoride gas. It ignites than explodes upon contact with nitrosyl perchlorate. Additon of platinum black catalyst caused ignition.

Special Remarks on Explosion Hazards:
Ethanol has an explosive reaction with the oxidized coating around potassium metal. Ethanol ignites and then explodes on contact with acetic anhydride + sodium hydrosulfate (ignites and may explode), disulfuric acid + nitric acid, phosphorous(III) oxide platinum, potassium-tert-butoxide+ acids. Ethanol forms explosive products in reaction with the following compound :

ammonia + silver nitrate (forms silver nitride and silver fulminate), iodine + phosphorus (forms ethane iodide), magnesium perchlorate (forms ethyl perchlorate), mercuric nitrate, nitric acid + silver (forms silver fulminate) silver nitrate (forms ethyl nitrate) silver(I) oxide + ammonia or hydrazine (forms silver nitride and silver fulminate), sodium (evolves hydrogen gas). Sodium Hydrazide + alcohol can produce an explosion. Alcohols should not be mixed with mercuric nitrate, as explosive mercuric fulminate may be formed. May form explosive mixture with manganese perchlorate + 2,2-dimethoxypropane. Addition of alcohols to highly concentrate hydrogen peroxide forms powerful explosives. Explodes on contact with calcium hypochlorite

Section 6: Accidental Release Measures

Small Spill:
Dilute with water and mop up, or absorb with an inert dry material and place in an appropriate waste disposal container.

Large Spill:
Flammable liquid. Keep away from heat. Keep away from sources of ignition. Stop leak if without risk. Absorb with DRY earth, sand or other non-combustible material. Do not touch spilled material. Prevent entry into sewers, basements or confined areas; dike if needed. Be careful that the product is not present at a concentration level above TLV. Check TLV on the MSDS and with local authorities.

Section 7: Handling and Storage

Precautions:
Keep locked up.. Keep away from heat. Keep away from sources of ignition. Ground all equipment containing material. Do not ingest. Do not breathe gas/fumes/ vapor/spray. Wear suitable protective clothing. In case of insufficient ventilation, wear suitable respiratory equipment. If ingested, seek medical advice immediately and show the container or the label. Avoid contact with skin and eyes. Keep away from incompatibles such as oxidizing agents, acids, alkalis, moisture.

Storage:
Store in a segregated and approved area. Keep container in a cool, well-ventilated area. Keep container tightly closed and sealed until ready for use. Avoid all possible sources of ignition (spark or flame). Do not store above 23°C (73.4°F).

Section 8: Exposure Controls/Personal Protection

Engineering Controls:
Provide exhaust ventilation or other engineering controls to keep the airborne concentrations of vapors below their respective threshold limit value. Ensure that eyewash stations and safety showers are proximal to the work-station location.

Personal Protection:
Splash goggles. Lab coat. Vapor respirator. Be sure to use an approved/certified respirator or equivalent. Gloves. Use a respirator if the exposure limit is exceeded.

Personal Protection in Case of a Large Spill:
Splash goggles. Full suit. Vapor respirator. Boots. Gloves. A self contained breathing apparatus should be used to avoid inhalation of the product. Suggested protective clothing might not be sufficient; consult a specialist BEFORE handling this product.

Exposure Limits:
TWA: 1900 (mg/m3) from OSHA (PEL) [United States] TWA: 1000 (ppm) from OSHA (PEL) [United States] TWA: 1900 (mg/m3) from NIOSH [United States] TWA: 1000 (ppm) from NIOSH [United States] TWA: 1000 (ppm) [United Kingdom (UK)] TWA: 1920 (mg/m3) [United Kingdom (UK)] TWA: 1000 STEL: 1250 (ppm) [Canada]Consult local authorities for acceptable exposure limits.

Section 9: Physical and Chemical Properties

Physical state and appearance: Liquid. (Liquid.)

Odor:
Mild to strong, rather pleasant; like wine or whiskey. Alcohol-like; Ethereal, vinous.

Taste: Pungent. Burning.

Molecular Weight: 46.07 g/mole

Color: Colorless. Clear

pH (1% soln/water): Not available.

Boiling Point: 78.5°C (173.3°F)

Melting Point: -114.1°C (-173.4°F)

Critical Temperature: 243°C (469.4°F)

Specific Gravity: 0.789 (Water = 1)

Vapor Pressure: 5.7 kPa (@ 20°C)

Vapor Density: 1.59 (Air = 1)

Volatility: Not available.

Odor Threshold: 100 ppm

Water/Oil Dist. Coeff.: The product is more soluble in water; log(oil/water) = -0.3

Ionicity (in Water): Not available.

Dispersion Properties: See solubility in water, methanol, diethyl ether, acetone.

Solubility:
Easily soluble in cold water, hot water. Soluble in methanol, diethyl ether, acetone.

Section 10: Stability and Reactivity Data

Stability: The product is stable.

Instability Temperature: Not available.

Conditions of Instability: Incompatible materials, heat, sources of ignition.

Incompatibility with various substances: Reactive with oxidizing agents, acids, alkalis.

Corrosivity: Non-corrosive in presence of glass.

Special Remarks on Reactivity:
Ethanol rapidly absorbs moisture from the air. Can react vigorously with oxiders. The following oxidants have been demonstrated to undergo vigorous/explosive reaction with ethanol: barium perchlorate, bromine pentafluoride, calcium hypochlorite, chloryl perchlorate, chromium trioxide, chromyl chloride, dioxygen difluoride, disulfuryl difluoride, fluorine nitrate, hydrogen peroxide, iodine heptafluoride, nitric acid nitrosyl perchlorate, perchloric acid permanganic acid, peroxodisulfuric acid, potassium dioxide, potassium perchlorate, potassium permanganate, ruthenium(VIII) oxide, silver perchlorate, silver peroxide, uranium hexafluoride, uranyl perchlorate. Ethanol reacts violently/expodes with the following compounds: acetyl bromide (evolves hydrogen bromide) acetyl chloride, aluminum, sesquibromide ethylate, ammonium hydroxide & silver oxide, chlorate, chromic anhydride, cyanuric acid + water, dichloromethane + sulfuric acid + nitrate (or) nitrite, hydrogen peroxide + sulfuric acid, iodine + methanol + mercuric oxide, manganese perchlorate + 2,2-dimethoxy propane, perchlorates, permanganates + sulfuric acid, potassium superoxide, potassium tert-butoxide, silver & nitric acid, silver perchlorate, sodium hydrazide, sulfuric acid + sodium dichromate, tetrachlorisilane + water. Ethanol is also incompatible with platinium, and sodium. No really safe conditions exist under which ethyl alcohol and chlorine oxides can be handled. Reacts vigorously with acetyl chloride

Special Remarks on Corrosivity: Not available.

Polymerization: Will not occur.

Section 11: Toxicological Information

Routes of Entry: Absorbed through skin. Dermal contact. Eye contact. Inhalation. Ingestion.

Toxicity to Animals:
WARNING: THE LC50 VALUES HEREUNDER ARE ESTIMATED ON THE BASIS OF A 4-HOUR EXPOSURE. Acute oral toxicity (LD50): 3450 mg/kg [Mouse]. Acute toxicity of the vapor (LC50): 39000 mg/m3 4 hours [Mouse].

Chronic Effects on Humans:
CARCINOGENIC EFFECTS: A4 (Not classifiable for human or animal.) by ACGIH. MUTAGENIC EFFECTS: Mutagenic for mammalian somatic cells. Mutagenic for bacteria and/or yeast. TERATOGENIC EFFECTS: Classified PROVEN for human. DEVELOPMENTAL TOXICITY: Classified Development toxin [PROVEN]. Classified Reproductive system/toxin/female, Reproductive system/toxin/male [POSSIBLE]. Causes damage to the following organs: blood, the reproductive system, liver, upper respiratory tract, skin, central nervous system (CNS).

Other Toxic Effects on Humans:
Hazardous in case of skin contact (irritant), of inhalation. Slightly hazardous in case of skin contact (permeator), of ingestion.

Special Remarks on Toxicity to Animals:
Lowest Published Dose/Conc: LDL[Human] - Route: Oral; Dose: 1400 mg/kg LDL[Human child] - Route: Oral; Dose: 2000 mg/kg LDL[Rabbit] - Route: Skin; Dose: 20000 mg/kg

Special Remarks on Chronic Effects on Humans:
May affect genetic material (mutagenic) Causes adverse reproductive effects and birth defects (teratogenic) , based on moderate to heavy consumption. May cause cancer based on animal data. Human: passes through the placenta, excreted in maternal milk.

Special Remarks on other Toxic Effects on Humans:
Acute potential health effects: Skin: causes skin irritation Eyes: causes eye irritation Ingestion: May cause gastrointestinal tract irritation with nausea, vomiting, diarrhea, and alterations in gastric secretions. May affect behavior/central nervous system (central nervous system depression - amnesia, headache, muscular incoordination, excitation, mild euphoria, slurred speech, drowsiness, staggaring gait, fatigue, changes in mood/personality, excessive talking, dizziness, ataxia, somnolence, coma/narcosis, hallucinations, distorted perceptions, general anesthetic), peripherial nervous system (spastic paralysis)vision (diplopia). Moderately toxic and narcotic in high concentrations. May also affect metabolism, blood, liver, respiration (dyspnea), and endocrine system. May affect respiratory tract, cardiovascular(cardiac arrhythmias, hypotension), and urinary systems. Inhalation: May cause irritation of the respiratory tract and affect behavior/central nervous system with symptoms similar to ingestion. Chronic Potential Health Effects: Skin: Prolonged or repeated skin contact may casue dermatitis, an allergic reaction. Ingestion: Prolonged or repeated ingestion will have similiar effects as acute ingestion. It may also affect the brain.

Section 12: Ecological Information

Ecotoxicity: Ecotoxicity in water (LC50): 14000 mg/l 96 hours [Rainbow trout]. 11200 mg/l 24 hours [fingerling trout].

BOD5 and COD: Not available.

Products of Biodegradation:
Possibly hazardous short term degradation products are not likely. However, long term degradation products may arise.

Toxicity of the Products of Biodegradation: The product itself and its products of degradation are not toxic.

Special Remarks on the Products of Biodegradation: Not available.

Section 13: Disposal Considerations

Waste Disposal:
Waste must be disposed of in accordance with federal, state and local environmental control regulations.

Section 14: Transport Information

DOT Classification: CLASS 3: Flammable liquid.

Identification: : Ethanol UNNA: 1170 PG: II

Special Provisions for Transport: Not available.

Section 15: Other Regulatory Information

Federal and State Regulations:
California prop. 65: This product contains the following ingredients for which the State of California has found to cause cancer, birth defects or other reproductive harm, which would require a warning under the statute: Ethyl alcohol 200 Proof (in alcoholic beverages) California prop. 65: This product contains the following ingredients for which the State of California has found to cause birth defects which would require a warning under the statute: Ethyl alcohol 200 Proof (in alcoholic beverages) Connecticut hazardous material survey.: Ethyl alcohol 200 Proof Illinois toxic substances disclosure to employee act: Ethyl alcohol 200 Proof Rhode Island RTK hazardous substances: Ethyl alcohol 200 Proof Pennsylvania RTK: Ethyl alcohol 200 Proof Florida: Ethyl alcohol 200 Proof Minnesota: Ethyl alcohol 200 Proof Massachusetts RTK: Ethyl alcohol 200 Proof Massachusetts spill list: Ethyl alcohol 200 Proof New Jersey: Ethyl alcohol 200 Proof Tennessee: Ethyl alcohol 200 Proof California - Directors List of Hazardous Substances (8 CCR 339): Ethyl alcohol 200 Proof TSCA 8(b) inventory: Ethyl alcohol 200 Proof

Other Regulations:
OSHA: Hazardous by definition of Hazard Communication Standard (29 CFR 1910.1200). EINECS: This product is on the European Inventory of Existing Commercial Chemical Substances.

Other Classifications:

WHMIS (Canada):
CLASS B-2: Flammable liquid with a flash point lower than 37.8°C (100°F). CLASS D-2A: Material causing other toxic effects (VERY TOXIC).

DSCL (EEC):
R11- Highly flammable. S7- Keep container tightly closed. S16- Keep away from sources of ignition - No smoking.

HMIS (U.S.A.):

Health Hazard: 2

Fire Hazard: 3

Reactivity: 0

Personal Protection: E

National Fire Protection Association (U.S.A.):

Health: 2

Flammability: 3

Reactivity: 0

Specific hazard:

Protective Equipment:
Gloves. Lab coat. Vapor respirator. Be sure to use an approved/certified respirator or equivalent. Wear appropriate respirator when ventilation is inadequate. Splash goggles.

Section 16: Other Information

References:
-SAX, N.I. Dangerous Properties of Indutrial Materials. Toronto, Van Nostrand Reinold, 6e ed. 1984. -Material safety data sheet emitted by: la Commission de la Santé et de la Sécurité du Travail du Québec. -Hawley, G.G.. The Condensed Chemical Dictionary, 11e ed., New York N.Y., Van Nostrand Reinold, 1987. -The Sigma-Aldrich Library of Chemical Safety Data, Edition II. HSDB, RTECS, and LOLI databases.

Other Special Considerations: Not available.

Created: 10/09/2005 05:28 PM

Last Updated: 05/21/2013 12:00 PM

The information above is believed to be accurate and represents the best information currently available to us. However, we make no warranty of merchantability or any other warranty, express or implied, with respect to such information, and we assume no liability resulting from its use. Users should make their own investigations to determine the suitability of the information for their particular purposes. In no event shall ScienceLab.com be liable for any claims, losses, or damages of any third party or for lost profits or any special, indirect, incidental, consequential or exemplary damages, howsoever arising, even if ScienceLab.com has been advised of the possibility of such damages.

Health	3
Fire	2
Reactivity	0
Personal Protection	H

Material Safety Data Sheet
Acetic acid MSDS

Section 1: Chemical Product and Company Identification

Product Name: Acetic acid

Catalog Codes: SLA3784, SLA1438, SLA2101, SLA3604, SLA1258

CAS#: 64-19-7

RTECS: AF1225000

TSCA: TSCA 8(b) inventory: Acetic acid

CI#: Not applicable.

Synonym: Acetic acid; glacial acetic acid

Chemical Name: Acetic Acid, Glacial

Chemical Formula: C2-H4-O2

Contact Information:

Sciencelab.com, Inc.
14025 Smith Rd.
Houston, Texas 77396

US Sales: **1-800-901-7247**
International Sales: **1-281-441-4400**

Order Online: ScienceLab.com

CHEMTREC (24HR Emergency Telephone), call: 1-800-424-9300

International CHEMTREC, call: 1-703-527-3887

For non-emergency assistance, call: 1-281-441-4400

Section 2: Composition and Information on Ingredients

Composition:

Name	CAS #	% by Weight
Acetic acid	64-19-7	100

Toxicological Data on Ingredients: Acetic acid: ORAL (LD50): Acute: 3310 mg/kg [Rat]. 4960 mg/kg [Mouse]. 3530 mg/kg [Rat]. DERMAL (LD50): Acute: 1060 mg/kg [Rabbit]. VAPOR (LC50): Acute: 5620 ppm 1 hours [Mouse].

Section 3: Hazards Identification

Potential Acute Health Effects:
Very hazardous in case of skin contact (irritant), of eye contact (irritant), of ingestion, of inhalation. Hazardous in case of skin contact (corrosive, permeator), of eye contact (corrosive). Liquid or spray mist may produce tissue damage particularly on mucous membranes of eyes, mouth and respiratory tract. Skin contact may produce burns. Inhalation of the spray mist may produce severe irritation of respiratory tract, characterized by coughing, choking, or shortness of breath. Inflammation of the eye is characterized by redness, watering, and itching. Skin inflammation is characterized by itching, scaling, reddening, or, occasionally, blistering.

Potential Chronic Health Effects:
Hazardous in case of skin contact (irritant), of ingestion, of inhalation. CARCINOGENIC EFFECTS: Not available. MUTAGENIC EFFECTS: Mutagenic for mammalian somatic cells. Mutagenic for bacteria and/or yeast. TERATOGENIC EFFECTS: Not available. DEVELOPMENTAL TOXICITY: Not available. The substance may be toxic to kidneys, mucous membranes, skin, teeth. Repeated or prolonged exposure to the substance can produce target organs damage. Repeated or prolonged contact with spray mist may produce chronic eye irritation and severe skin irritation. Repeated or prolonged exposure to spray mist may produce respiratory tract irritation leading to frequent attacks of bronchial infection.

Section 4: First Aid Measures

Eye Contact:
Check for and remove any contact lenses. In case of contact, immediately flush eyes with plenty of water for at least 15 minutes. Cold water may be used. Get medical attention immediately.

Skin Contact:
In case of contact, immediately flush skin with plenty of water for at least 15 minutes while removing contaminated clothing and shoes. Cover the irritated skin with an emollient. Cold water may be used.Wash clothing before reuse. Thoroughly clean shoes before reuse. Get medical attention immediately.

Serious Skin Contact:
Wash with a disinfectant soap and cover the contaminated skin with an anti-bacterial cream. Seek immediate medical attention.

Inhalation:
If inhaled, remove to fresh air. If not breathing, give artificial respiration. If breathing is difficult, give oxygen. Get medical attention immediately.

Serious Inhalation:
Evacuate the victim to a safe area as soon as possible. Loosen tight clothing such as a collar, tie, belt or waistband. If breathing is difficult, administer oxygen. If the victim is not breathing, perform mouth-to-mouth resuscitation. WARNING: It may be hazardous to the person providing aid to give mouth-to-mouth resuscitation when the inhaled material is toxic, infectious or corrosive. Seek immediate medical attention.

Ingestion:
Do NOT induce vomiting unless directed to do so by medical personnel. Never give anything by mouth to an unconscious person. Loosen tight clothing such as a collar, tie, belt or waistband. Get medical attention if symptoms appear.

Serious Ingestion: Not available.

Section 5: Fire and Explosion Data

Flammability of the Product: Flammable.

Auto-Ignition Temperature: 463°C (865.4°F)

Flash Points: CLOSED CUP: 39°C (102.2°F). OPEN CUP: 43°C (109.4°F).

Flammable Limits: LOWER: 4% UPPER: 19.9%

Products of Combustion: These products are carbon oxides (CO, CO2).

Fire Hazards in Presence of Various Substances:
Flammable in presence of open flames and sparks, of heat. Slightly flammable to flammable in presence of oxidizing materials, of metals.

Explosion Hazards in Presence of Various Substances:
Risks of explosion of the product in presence of mechanical impact: Not available. Risks of explosion of the product in presence of static discharge: Not available. Slightly explosive in presence of oxidizing materials.

Fire Fighting Media and Instructions:
Flammable liquid, soluble or dispersed in water. SMALL FIRE: Use DRY chemical powder. LARGE FIRE: Use alcohol foam, water spray or fog. Cool containing vessels with water jet in order to prevent pressure build-up, autoignition or explosion.

Special Remarks on Fire Hazards:
Reacts with metals to produces flammable hydrogen gas. It will ignite on contact with potassium-tert-butoxide. A mixture of ammonium nitrate and acetic acid ignites when warmed, especially if warmed.

Special Remarks on Explosion Hazards:

Acetic acid vapors may form explosive mixtures with air. Reactions between acetic acid and the following materials are potentially explosive: 5-azidotetrazole, bromine pentafluoride, chromium trioxide, hydrogen peroxide, potassium permanganate, sodium peroxide, and phorphorus trichloride. Dilute acetic acid and dilute hydrogen can undergo an exothermic reaction if heated, forming peracetic acid which is explosive at 110 degrees C. Reaction between chlorine trifluoride and acetic acid is very violent, sometimes explosive.

Section 6: Accidental Release Measures

Small Spill:
Dilute with water and mop up, or absorb with an inert dry material and place in an appropriate waste disposal container. If necessary: Neutralize the residue with a dilute solution of sodium carbonate.

Large Spill:
Flammable liquid. Corrosive liquid. Keep away from heat. Keep away from sources of ignition. Stop leak if without risk. If the product is in its solid form: Use a shovel to put the material into a convenient waste disposal container. If the product is in its liquid form: Absorb with DRY earth, sand or other non-combustible material. Do not get water inside container. Absorb with an inert material and put the spilled material in an appropriate waste disposal. Do not touch spilled material. Use water spray curtain to divert vapor drift. Prevent entry into sewers, basements or confined areas; dike if needed. Call for assistance on disposal. Neutralize the residue with a dilute solution of sodium carbonate. Be careful that the product is not present at a concentration level above TLV. Check TLV on the MSDS and with local authorities.

Section 7: Handling and Storage

Precautions:
\Keep away from heat. Keep away from sources of ignition. Ground all equipment containing material. Do not ingest. Do not breathe gas/fumes/ vapor/spray. Never add water to this product. In case of insufficient ventilation, wear suitable respiratory equipment. If ingested, seek medical advice immediately and show the container or the label. Avoid contact with skin and eyes. Keep away from incompatibles such as oxidizing agents, reducing agents, metals, acids, alkalis.

Storage:
Store in a segregated and approved area. Keep container in a cool, well-ventilated area. Keep container tightly closed and sealed until ready for use. Avoid all possible sources of ignition (spark or flame).

Section 8: Exposure Controls/Personal Protection

Engineering Controls:
Provide exhaust ventilation or other engineering controls to keep the airborne concentrations of vapors below their respective threshold limit value. Ensure that eyewash stations and safety showers are proximal to the work-station location.

Personal Protection:
Splash goggles. Synthetic apron. Vapor respirator. Be sure to use an approved/certified respirator or equivalent. Gloves (impervious).

Personal Protection in Case of a Large Spill:
Splash goggles. Full suit. Vapor respirator. Boots. Gloves. A self contained breathing apparatus should be used to avoid inhalation of the product. Suggested protective clothing might not be sufficient; consult a specialist BEFORE handling this product.

Exposure Limits:
TWA: 10 STEL: 15 (ppm) [Australia] TWA: 25 STEL: 27 (mg/m3) [Australia] TWA: 10 STEL: 15 (ppm) from NIOSH TWA: 25 STEL: 37 (mg/m3) from NIOSH TWA: 10 STEL: 15 (ppm) [Canada] TWA: 26 STEL: 39 (mg/m3) [Canada] TWA: 25 STEL: 37 (mg/m3) TWA: 10 STEL: 15 (ppm) from ACGIH (TLV) [United States] [1999] TWA: 10 (ppm) from OSHA (PEL) [United States] TWA: 25 (mg/m3) from OSHA (PEL) [United States]Consult local authorities for acceptable exposure limits.

Section 9: Physical and Chemical Properties

Physical state and appearance: Liquid.

Odor: Pungent, vinegar-like, sour (Strong.)

Taste: Vinegar, sour (Strong.)

Molecular Weight: 60.05 g/mole

Color: Colorless. Clear (Light.)

pH (1% soln/water): 2 [Acidic.]

Boiling Point: 118.1°C (244.6°F)

Melting Point: 16.6°C (61.9°F)

Critical Temperature: 321.67°C (611°F)

Specific Gravity: 1.049 (Water = 1)

Vapor Pressure: 1.5 kPa (@ 20°C)

Vapor Density: 2.07 (Air = 1)

Volatility: Not available.

Odor Threshold: 0.48 ppm

Water/Oil Dist. Coeff.: The product is more soluble in water; log(oil/water) = -0.2

Ionicity (in Water): Not available.

Dispersion Properties: See solubility in water, diethyl ether, acetone.

Solubility:
Easily soluble in cold water, hot water. Soluble in diethyl ether, acetone. Miscible with Glycerol, alcohol, Benzene, Carbon Tetrachloride. Practically insoluble in Carbon Disulfide.

Section 10: Stability and Reactivity Data

Stability: The product is stable.

Instability Temperature: Not available.

Conditions of Instability: Heat, ignition sources, incompatible materials

Incompatibility with various substances: Reactive with oxidizing agents, reducing agents, metals, acids, alkalis.

Corrosivity:
Highly corrosive in presence of stainless steel(304). Slightly corrosive in presence of aluminum, of copper. Non-corrosive in presence of stainless steel(316).

Special Remarks on Reactivity:
Reacts violently with strong oxidizing agents, acetaldehyde, and acetic anhydride. Material can react with metals, strong bases, amines, carbonates, hydroxides, phosphates, many oxides,cyanides, sulfides, chromic acid, nitric acid, hydrogen peroxide, carbonates. ammonium nitrate, ammonium thiosulfate, chlorine trifluoride, chlorosulfonic acid, perchloric acid, permanganates, xylene, oleum, potassium hydroxide, sodium hydroxide, phosphorus isocyanate, ethylenediamine, ethylene imine.

Special Remarks on Corrosivity: Moderate corrosive effect on bronze. No corrosion data on brass

Polymerization: Will not occur.

Section 11: Toxicological Information

Routes of Entry: Absorbed through skin. Dermal contact. Eye contact. Inhalation. Ingestion.

Toxicity to Animals:
WARNING: THE LC50 VALUES HEREUNDER ARE ESTIMATED ON THE BASIS OF A 4-HOUR EXPOSURE. Acute oral toxicity (LD50): 3310 mg/kg [Rat]. Acute dermal toxicity (LD50): 1060 mg/kg [Rabbit]. Acute toxicity of the vapor (LC50): 5620 1 hours [Mouse].

Chronic Effects on Humans:
MUTAGENIC EFFECTS: Mutagenic for mammalian somatic cells. Mutagenic for bacteria and/or yeast. May cause damage to the following organs: kidneys, mucous membranes, skin, teeth.

Other Toxic Effects on Humans:
Extremely hazardous in case of inhalation (lung corrosive). Very hazardous in case of skin contact (irritant), of ingestion, . Hazardous in case of skin contact (corrosive, permeator), of eye contact (corrosive).

Special Remarks on Toxicity to Animals: Not available.

Special Remarks on Chronic Effects on Humans: May affect genetic material and may cause reproductive effects based on animal data. No human data found.

Special Remarks on other Toxic Effects on Humans:
Acute Potential Health Effects: Skin: Extremely irritating and corrosive. Causes skin irritation (reddening and itching, inflammation). May cause blistering , tissue damage and burns. Eyes: Extremely irritating and corrosive. Causes eye irritation, lacrimation, redness, and pain. May cause burns, blurred vision, conjunctivitis, conjunctival and corneal destruction and permanent injury. Inhalation: Causes severe respiratory tract irritation. Affects the sense organs (nose, ear, eye, taste), and blood. May cause chemical pneumonitis, bronchitis, and pulmonary edema. Severe exposure may result in lung tissue damage and corrosion (ulceration) of the mucous membranes. Inhalation may also cause rhinitis, sneezing, coughing, oppressive feeling in the chest or chest pain, dyspnea, wheezing, tachypnea, cyanosis, salivation, nausea, giddiness, muscular weakness. Ingestion: Moderately toxic. Corrosive. Causes gastrointestinal tract irritation (burning and pain of the mouth, throat, and abdomen, coughing, ulceration, bleeding, nausea, abdomial spasms, vomiting, hematemesis, diarrhea. May Also affect the liver (impaired liver function), behavior (convulsions, giddines, muscular weakness), and the urinary system - kidneys (Hematuria, Albuminuria, Nephrosis, acute renal failure, acute tubular necrosis). May also cause dyspnea or asphyxia. May also lead to shock, coma and death. Chronic Potential Health Effects: Chronic exposure via ingestion may cause blackening or erosion of the teeth and jaw necrosis, pharyngitis, and gastritis. It may also behavior (similar to acute ingestion), and metabolism (weight loss). Chronic exposure via inhalation may cause asthma and/or bronchitis with cough, phlegm, and/or shortness of breath . It may also affect the blood (decreased leukocyte count), and urinary system (kidneys). Repeated or prolonged skin contact may cause thickening, blackening, and cracking of the skin.

Section 12: Ecological Information

Ecotoxicity:
Ecotoxicity in water (LC50): 423 mg/l 24 hours [Fish (Goldfish)]. 88 ppm 96 hours [Fish (fathead minnow)]. 75 ppm 96 hours [Fish (bluegill sunfish)]. >100 ppm 96 hours [Daphnia].

BOD5 and COD: BOD-5: 0.34-0.88 g oxygen/g

Products of Biodegradation:
Possibly hazardous short term degradation products are not likely. However, long term degradation products may arise.

Toxicity of the Products of Biodegradation: The products of degradation are less toxic than the product itself.

Special Remarks on the Products of Biodegradation: Not available.

Section 13: Disposal Considerations

Waste Disposal:
Waste must be disposed of in accordance with federal, state and local environmental control regulations.

Section 14: Transport Information

DOT Classification:

CLASS 3: Flammable liquid. Class 8: Corrosive material

Identification: : Acetic Acid, Glacial UNNA: 2789 PG: II

Special Provisions for Transport: Not available.

Section 15: Other Regulatory Information

Federal and State Regulations:
New York release reporting list: Acetic acid Rhode Island RTK hazardous substances: Acetic acid Pennsylvania RTK: Acetic acid Florida: Acetic acid Minnesota: Acetic acid Massachusetts RTK: Acetic acid New Jersey: Acetic acid California Director's List of Hazardous Subtances (8 CCR 339): Acetic acid TSCA 8(b) inventory: Acetic acid CERCLA: Hazardous substances.: Acetic acid: 5000 lbs. (2268 kg)

Other Regulations:
OSHA: Hazardous by definition of Hazard Communication Standard (29 CFR 1910.1200). EINECS: This product is on the European Inventory of Existing Commercial Chemical Substances.

Other Classifications:

WHMIS (Canada):
CLASS B-3: Combustible liquid with a flash point between 37.8°C (100°F) and 93.3°C (200°F). CLASS E: Corrosive liquid.

DSCL (EEC):
R10- Flammable. R35- Causes severe burns. S23- Do not breathe gas/fumes/vapour/spray [***] S26- In case of contact with eyes, rinse immediately with plenty of water and seek medical advice. S45- In case of accident or if you feel unwell, seek medical advice immediately (show the label where possible).

HMIS (U.S.A.):

Health Hazard: 3

Fire Hazard: 2

Reactivity: 0

Personal Protection: H

National Fire Protection Association (U.S.A.):

Health: 3

Flammability: 2

Reactivity: 0

Specific hazard:

Protective Equipment:
Gloves (impervious). Synthetic apron. Vapor respirator. Be sure to use an approved/certified respirator or equivalent. Wear appropriate respirator when ventilation is inadequate. Splash goggles.

Section 16: Other Information

References: Not available.

Other Special Considerations: Not available.

Created: 10/09/2005 03:35 PM

Last Updated: 05/21/2013 12:00 PM

The information above is believed to be accurate and represents the best information currently available to us. However, we make no warranty of merchantability or any other warranty, express or implied, with respect to such information, and we assume

no liability resulting from its use. Users should make their own investigations to determine the suitability of the information for their particular purposes. In no event shall ScienceLab.com be liable for any claims, losses, or damages of any third party or for lost profits or any special, indirect, incidental, consequential or exemplary damages, howsoever arising, even if ScienceLab.com has been advised of the possibility of such damages.

ScienceLab.com
Chemicals & Laboratory Equipment

Health	3
Fire	2
Reactivity	0
Personal Protection	

Material Safety Data Sheet
Butyric acid MSDS

Section 1: Chemical Product and Company Identification

Product Name: Butyric acid

Catalog Codes: SLB4627

CAS#: 107-92-6

RTECS: ES5425000

TSCA: TSCA 8(b) inventory: Butyric acid

CI#: Not available.

Synonym:

Chemical Formula: CH3CH2CH2COOH

Contact Information:

Sciencelab.com, Inc.
14025 Smith Rd.
Houston, Texas 77396

US Sales: **1-800-901-7247**
International Sales: **1-281-441-4400**

Order Online: ScienceLab.com

CHEMTREC (24HR Emergency Telephone), call: 1-800-424-9300

International CHEMTREC, call: 1-703-527-3887

For non-emergency assistance, call: 1-281-441-4400

Section 2: Composition and Information on Ingredients

Composition:

Name	CAS #	% by Weight
Butyric acid	107-92-6	100

Toxicological Data on Ingredients: Butyric acid: ORAL (LD50): Acute: 2000 mg/kg [Rat]. DERMAL (LD50): Acute: 530 mg/kg [Rabbit].

Section 3: Hazards Identification

Potential Acute Health Effects:
Very hazardous in case of skin contact (irritant), of ingestion. Hazardous in case of eye contact (irritant), of inhalation. Slightly hazardous in case of skin contact (corrosive, permeator). Liquid or spray mist may produce tissue damage particularly on mucous membranes of eyes, mouth and respiratory tract. Skin contact may produce burns. Inhalation of the spray mist may produce severe irritation of respiratory tract, characterized by coughing, choking, or shortness of breath.

Potential Chronic Health Effects:
CARCINOGENIC EFFECTS: Not available. MUTAGENIC EFFECTS: Not available. TERATOGENIC EFFECTS: Not available. DEVELOPMENTAL TOXICITY: Not available. The substance is toxic to lungs, the nervous system, mucous membranes. Repeated or prolonged exposure to the substance can produce target organs damage. Repeated or prolonged contact with spray mist may produce chronic eye irritation and severe skin irritation. Repeated or prolonged exposure to spray mist may produce respiratory tract irritation leading to frequent attacks of bronchial infection.

Section 4: First Aid Measures

Eye Contact:
Check for and remove any contact lenses. In case of contact, immediately flush eyes with plenty of water for at least 15 minutes. Cold water may be used. Get medical attention.

Skin Contact:
In case of contact, immediately flush skin with plenty of water for at least 15 minutes while removing contaminated clothing and shoes. Cover the irritated skin with an emollient. Cold water may be used.Wash clothing before reuse. Thoroughly clean shoes before reuse. Get medical attention immediately.

Serious Skin Contact:
Wash with a disinfectant soap and cover the contaminated skin with an anti-bacterial cream. Seek immediate medical attention.

Inhalation:
If inhaled, remove to fresh air. If not breathing, give artificial respiration. If breathing is difficult, give oxygen. Get medical attention.

Serious Inhalation:
Evacuate the victim to a safe area as soon as possible. Loosen tight clothing such as a collar, tie, belt or waistband. If breathing is difficult, administer oxygen. If the victim is not breathing, perform mouth-to-mouth resuscitation. WARNING: It may be hazardous to the person providing aid to give mouth-to-mouth resuscitation when the inhaled material is toxic, infectious or corrosive. Seek immediate medical attention.

Ingestion:
Do NOT induce vomiting unless directed to do so by medical personnel. Never give anything by mouth to an unconscious person. If large quantities of this material are swallowed, call a physician immediately. Loosen tight clothing such as a collar, tie, belt or waistband.

Serious Ingestion: Not available.

Section 5: Fire and Explosion Data

Flammability of the Product: Combustible.

Auto-Ignition Temperature: 452°C (845.6°F)

Flash Points: CLOSED CUP: 71.7°C (161.1°F). OPEN CUP: 74.4°C (165.9°F).

Flammable Limits: LOWER: 2% UPPER: 10%

Products of Combustion: These products are carbon oxides (CO, CO2).

Fire Hazards in Presence of Various Substances: Not available.

Explosion Hazards in Presence of Various Substances:
Risks of explosion of the product in presence of mechanical impact: Not available. Risks of explosion of the product in presence of static discharge: Not available.

Fire Fighting Media and Instructions:
SMALL FIRE: Use DRY chemical powder. LARGE FIRE: Use water spray, fog or foam. Do not use water jet.

Special Remarks on Fire Hazards: Not available.

Special Remarks on Explosion Hazards: Not available.

Section 6: Accidental Release Measures

Small Spill:
Dilute with water and mop up, or absorb with an inert dry material and place in an appropriate waste disposal container.

Large Spill:
Combustible material. Corrosive liquid. Keep away from heat. Keep away from sources of ignition. Stop leak if without risk. Absorb with DRY earth, sand or other non-combustible material. Do not get water inside container. Do not touch spilled

material. Use water spray curtain to divert vapor drift. Prevent entry into sewers, basements or confined areas; dike if needed. Call for assistance on disposal.

Section 7: Handling and Storage

Precautions:
Keep container dry. Keep away from heat. Keep away from sources of ignition. Ground all equipment containing material. Do not ingest. Do not breathe gas/fumes/ vapor/spray. Never add water to this product. In case of insufficient ventilation, wear suitable respiratory equipment. If ingested, seek medical advice immediately and show the container or the label. Avoid contact with skin and eyes.

Storage:
Keep container in a cool, well-ventilated area. Keep container tightly closed and sealed until ready for use. Avoid all possible sources of ignition (spark or flame).

Section 8: Exposure Controls/Personal Protection

Engineering Controls:
Provide exhaust ventilation or other engineering controls to keep the airborne concentrations of vapors below their respective threshold limit value. Ensure that eyewash stations and safety showers are proximal to the work-station location.

Personal Protection:
Face shield. Full suit. Vapor respirator. Be sure to use an approved/certified respirator or equivalent. Gloves. Boots.

Personal Protection in Case of a Large Spill:
Splash goggles. Full suit. Vapor respirator. Boots. Gloves. A self contained breathing apparatus should be used to avoid inhalation of the product. Suggested protective clothing might not be sufficient; consult a specialist BEFORE handling this product.

Exposure Limits: Not available.

Section 9: Physical and Chemical Properties

Physical state and appearance: Liquid.

Odor: Not available.

Taste: Not available.

Molecular Weight: 88.12g/mole

Color: Not available.

pH (1% soln/water): Not available.

Boiling Point: 163.5°C (326.3°F)

Melting Point: -7.9°C (17.8°F)

Critical Temperature: Not available.

Specific Gravity: 0.959 (Water = 1)

Vapor Pressure: 0.1 kPa (@ 20°C)

Vapor Density: 3.04 (Air = 1)

Volatility: Not available.

Odor Threshold: Not available.

Water/Oil Dist. Coeff.: Not available.

Ionicity (in Water): Not available.

Dispersion Properties: See solubility in water.

Solubility: Easily soluble in cold water.

Section 10: Stability and Reactivity Data

Stability: The product is stable.

Instability Temperature: Not available.

Conditions of Instability: Not available.

Incompatibility with various substances: Not available.

Corrosivity: Non-corrosive in presence of glass.

Special Remarks on Reactivity: Not available.

Special Remarks on Corrosivity: Not available.

Polymerization: Will not occur.

Section 11: Toxicological Information

Routes of Entry: Eye contact. Inhalation. Ingestion.

Toxicity to Animals:
Acute oral toxicity (LD50): 2000 mg/kg [Rat]. Acute dermal toxicity (LD50): 530 mg/kg [Rabbit].

Chronic Effects on Humans: Causes damage to the following organs: lungs, the nervous system, mucous membranes.

Other Toxic Effects on Humans:
Very hazardous in case of skin contact (irritant), of ingestion. Hazardous in case of inhalation. Slightly hazardous in case of skin contact (corrosive, permeator).

Special Remarks on Toxicity to Animals: Not available.

Special Remarks on Chronic Effects on Humans: Not available.

Special Remarks on other Toxic Effects on Humans: Not available.

Section 12: Ecological Information

Ecotoxicity: Not available.

BOD5 and COD: Not available.

Products of Biodegradation:
Possibly hazardous short term degradation products are not likely. However, long term degradation products may arise.

Toxicity of the Products of Biodegradation: The products of degradation are more toxic.

Special Remarks on the Products of Biodegradation: Not available.

Section 13: Disposal Considerations

Waste Disposal:

Section 14: Transport Information

DOT Classification: Class 8: Corrosive material

Identification: : Butyric acid UNNA: UN2820 PG: III

Special Provisions for Transport: Not available.

Section 15: Other Regulatory Information

Federal and State Regulations:
Pennsylvania RTK: Butyric acid Massachusetts RTK: Butyric acid TSCA 8(b) inventory: Butyric acid CERCLA: Hazardous substances.: Butyric acid

Other Regulations: OSHA: Hazardous by definition of Hazard Communication Standard (29 CFR 1910.1200).

Other Classifications:

WHMIS (Canada):
CLASS B-3: Combustible liquid with a flash point between 37.8°C (100°F) and 93.3°C (200°F). CLASS D-1B: Material causing immediate and serious toxic effects (TOXIC). CLASS D-2A: Material causing other toxic effects (VERY TOXIC). CLASS E: Corrosive liquid.

DSCL (EEC):
R21/22- Harmful in contact with skin and if swallowed. R36/38- Irritating to eyes and skin.

HMIS (U.S.A.):

Health Hazard: 3

Fire Hazard: 2

Reactivity: 0

Personal Protection:

National Fire Protection Association (U.S.A.):

Health: 3

Flammability: 2

Reactivity: 0

Specific hazard:

Protective Equipment:
Gloves. Full suit. Vapor respirator. Be sure to use an approved/certified respirator or equivalent. Wear appropriate respirator when ventilation is inadequate. Face shield.

Section 16: Other Information

References: Not available.

Other Special Considerations: Not available.

Created: 10/09/2005 04:28 PM

Last Updated: 05/21/2013 12:00 PM

The information above is believed to be accurate and represents the best information currently available to us. However, we make no warranty of merchantability or any other warranty, express or implied, with respect to such information, and we assume no liability resulting from its use. Users should make their own investigations to determine the suitability of the information for their particular purposes. In no event shall ScienceLab.com be liable for any claims, losses, or damages of any third party or for lost profits or any special, indirect, incidental, consequential or exemplary damages, howsoever arising, even if ScienceLab.com has been advised of the possibility of such damages.

AIR PRODUCTS

MATERIAL SAFETY DATA SHEET

SECTION 1. PRODUCT IDENTIFICATION

PRODUCT NAME: **Carbon Dioxide**

CHEMICAL NAME: Carbon Dioxide **FORMULA:** CO_2

SYNONYMS: Carbonic Anhydride, Carbonic Acid Gas, Carbon Anhydride

MANUFACTURER: **Air Products and Chemicals, Inc.**
7201 Hamilton Boulevard
Allentown, PA 18195-1501

PRODUCT INFORMATION: 1 - 800 - 752 - 1597

MSDS NUMBER: 1005 **REVISION:** 5
REVISION DATE: March 1993 **REVIEW DATE:** March 1994

SECTION 2. COMPOSITION / INFORMATION ON INGREDIENTS

CONCENTRATION: Carbon dioxide is sold as pure product > 99%.

CAS NUMBER: 124-38-9

EXPOSURE LIMITS:
OSHA: PEL-TWA = 5000 ppm **ACGIH:** TLV-TWA = 5000 ppm **NIOSH:** None established

SECTION 3. HAZARDS IDENTIFICATION

EMERGENCY OVERVIEW

Carbon dioxide is a nonflammable liquefied compressed gas packaged in cylinders under its own vapor pressure of 838 psig at 70 °F (21.1 °C). High concentrations can cause rapid suffocation and can also increase respiration and heart rate. Contact with liquid may cause frostbite. Avoid breathing gas. Self contained breathing apparatus (SCBA) may be required by rescue workers.

EMERGENCY TELEPHONE NUMBERS

800 - 523 - 9374 **Continental U.S., Canada, or Puerto Rico**
610 - 481 - 7711 **other locations**

POTENTIAL HEALTH EFFECTS:

INHALATION: Carbon dioxide is an asphyxiant. Concentrations of 10% or more can produce unconsciousness or death.

EYE CONTACT: Contact with liquid or cold vapor can cause freezing of tissue.

SKIN CONTACT: Contact with liquid or cold vapor can cause frostbite.

EXPOSURE INFORMATION:

ROUTE OF ENTRY: Inhalation

TARGET ORGANS: Central nervous system

EFFECT: Asphyxiation (suffocation). Overexposure may cause damage to retinal ganglion cells and central nervous system.

SYMPTOMS: Headache, sweating, rapid breathing, increased heartbeat, shortness of breath, dizziness, mental depression, visual disturbances, and shaking.

CHRONIC EFFECTS: None established.

MEDICAL CONDITIONS AGGRAVATED BY OVEREXPOSURE: None

CARCINOGENICITY: Carbon dioxide is not listed by NTP, OSHA or IARC.

SECTION 4. FIRST AID

INHALATION: Persons suffering from overexposure should be moved to fresh air. If victim is not breathing, administer artificial respiration. If breathing is difficult, administer oxygen. Obtain prompt medical attention.

EYE CONTACT: Contact with liquid or cold vapor can cause freezing of tissue. Gently flush eyes with lukewarm water. Obtain medical attention immediately.

SKIN CONTACT: Contact with liquid or cold vapor can cause frostbite. Immediately warm affected area with lukewarm water not to exceed 107 °F.

NOTES TO PHYSICIAN: There is no specific antidote. Treatment for overexposure should be directed at the control of symptoms and the clinical condition.

SECTION 5. FIRE AND EXPLOSION

FLASH POINT: **AUTOIGNITION:** **FLAMMABLE LIMITS:**
Not Applicable Nonflammable
Nonflammable

EXTINGUISHING MEDIA: Carbon dioxide is nonflammable and does not support combustion. Carbon dioxide is an extinguishing agent for class B and C fires. Use extinguishing media appropriate for the surrounding fire.

HAZARDOUS COMBUSTION PRODUCTS: None known.

FIRE FIGHTING PROCEDURES: Evacuate personnel from danger area. Carbon dioxide is nonflammable. If possible, without risk, remove cylinders from fire area or cool with water. Self contained breathing apparatus (SCBA) may be required for rescue workers.

UNUSUAL HAZARDS: Upon exposure to intense heat or flame, cylinder will vent rapidly and or rupture violently. Most cylinders are designed to vent contents when exposed to elevated temperatures. Pressure in a container can build up due to heat and it may rupture if pressure relief devices should fail to function.

SECTION 6. ACCIDENTAL RELEASE MEASURES

Evacuate all personnel from affected area. Increase ventilation to release area and monitor oxygen level. Use appropriate protective equipment (SCBA). If leak is from cylinder or cylinder valve call the Air Products emergency telephone number. If leak is in user's system close cylinder valve and vent pressure before attempting repairs.

SECTION 7. HANDLING AND STORAGE

STORAGE: Cylinders should be stored upright in a well-ventilated, secure area, protected from the weather. Storage area temperatures should not exceed 125 °F (52 °C). Storage should be away from heavily traveled areas and emergency exits. Avoid areas where salt or other corrosive materials are present. Valve protection caps and valve outlet seals should remain on cylinders not connected for use. Separate full from empty cylinders. Avoid excessive inventory and storage time. Use a first-in first-out system. Keep good inventory records.

HANDLING: Use a suitable hand truck for cylinder movement. Never attempt to lift a cylinder by its valve protection valve cap. Never apply flame or localized heat directly to any part of the cylinder. Do not

allow any part of the cylinder to exceed 125 °F (52 °C). High temperature may cause damage to cylinder and/or premature failure of pressure relief device which will result in venting of cylinder contents. If user experiences any difficulty operating cylinder valve discontinue use and contact supplier. Never insert an object (e.g., wrench, screwdriver, pry bar, etc.) into valve cap openings. Doing so may damage valve causing a leak to occur. Use an adjustable strap wrench to remove over-tight or rusted caps.

Only the proper CGA connections should be used, never use adapters. Use piping and equipment adequately designed to withstand pressures to be encountered. If liquid product is being used ensure steps have been taken to prevent entrapment of liquid in closed systems. The use of pressure relief devices may be necessary. Use a check valve or other protective apparatus in any line or piping from the cylinder to prevent reverse flow.

Carbon dioxide is compatible with all common materials of construction. Pressure requirements should be considered when selecting materials and designing systems.

Use a "FULL", "IN USE", and "EMPTY" tag system on cylinders. This will reduce the chances of inadvertently connecting or operating the wrong cylinder.

SPECIAL REQUIREMENTS: Always store and handle compressed gases in accordance with Compressed Gas Association, Inc. (ph. 703-979-0900) pamphlet CGA P-1, *Safe Handling of Compressed Gases in Containers*. Local regulations may require specific equipment for storage or use.

CAUTION: Compressed gas cylinders shall not be refilled except by qualified producers of compressed gases. Shipment of a compressed gas cylinder which has not been filled by the owner or with the owner's written consent is a violation of federal law.

SECTION 8. PERSONAL PROTECTION / EXPOSURE CONTROL

ENGINEERING CONTROLS: Provide ventilation and/or local exhaust to prevent accumulation of carbon dioxide concentrations above 5000 ppm.

RESPIRATORY PROTECTION:

Emergency Use: Self contained breathing apparatus (SCBA) or positive pressure airline with mask and escape pack are to be used in oxygen deficient atmosphere. Air purifying respirators will not provide protection.

EYE PROTECTION: Safety glasses are recommended when handling, connecting, or disconnecting cylinders, and when pressurizing systems

OTHER PROTECTIVE EQUIPMENT: Safety shoes and leather work gloves when handling cylinders.

SECTION 9. PHYSICAL AND CHEMICAL PROPERTIES

APPEARANCE, ODOR AND STATE: Colorless and odorless. A slightly acid gas. It is felt by some to have a slight pungent odor and biting taste.

MOLECULAR WEIGHT: 44.01

GAS DENSITY (at 70 °F (21.1 °C) and 1 atm): 0.1144 lb/ft^3 (1.832 kg/m^3)

VAPOR PRESSURE (at 70 °F (21.1 °C)): 838 psig

SPECIFIC GRAVITY (Air =1): 1.522

SPECIFIC VOLUME (at 70 °F (21.1 °C) and 1 atm): 8.74 ft^3/lb (0.5457 m^3/kg)

BOILING POINT: -109.3 °F (-78.5 °C)

TRIPLE POINT (At 60.4 psig): -69.9 °F (-56.6 °C)

SOLUBILITY IN WATER (Vol./Vol. at 68 °F (20 °C)): 0.90

SECTION 10. STABILITY AND REACTIVITY

STABILITY: Stable

CONDITIONS TO AVOID: None

INCOMPATIBILITY (Materials to Avoid): None

REACTIVITY:

HAZARDOUS DECOMPOSITION PRODUCTS: None

HAZARDOUS POLYMERIZATION: Will not occur

SECTION 11. TOXICOLOGICAL INFORMATION

Carbon dioxide is an asphyxiant. It initially stimulates respiration and then causes respiratory depression. High concentrations result in narcosis. Symptoms in humans are as follows:

CONCENTRATION	EFFECT
1%	Slight increase in breathing rate
2%	Breathing rate increases to 50% above normal. Prolonged exposure can cause headache and tiredness.
3%	Breathing increases to twice the normal rate and becomes labored. Weak narcotic effect. Impaired hearing, headache, increase in blood pressure and pulse rate.
4-5%	Breathing increases to approximately four times the normal rate, symptoms of intoxication become evident and slight choking may be felt.
5-10%	Characteristic sharp odor noticeable. Very labored breathing, headache, visual impairment and ringing in the ears. Judgment may be impaired, followed within minutes by loss of consciousness.
50-100%	Unconsciousness occurs more rapidly above 10% level. Prolonged exposure to high concentrations may eventually result in death from asphyxiation.

SECTION 12. ECOLOGICAL INFORMATION

No adverse ecological effects are expected. No adverse ecological effects are expected. Carbon dioxide does not contain any Class I or Class II ozone depleting chemicals. Carbon dioxide is not listed as a marine pollutant by DOT (49 CFR 171).

SECTION 13. DISPOSAL

UNUSED PRODUCT / EMPTY CYLINDER: Return cylinder and unused product to supplier. Do not attempt to dispose of unused product. Ensure cylinder valve is properly closed, valve outlet cap has been reinstalled, and valve protection cap is secured before shipping cylinder.

WASTE DISPOSAL METHODS: For emergency disposal, secure the cylinder and slowly discharge gas to the atmosphere in a well ventilated area or outdoors. Small amounts may be disposed of by reacting with a mild base.

SECTION 14. TRANSPORT INFORMATION

DOT SHIPPING NAME: Carbon dioxide

HAZARD CLASS: 2.2 (Nonflammable Gas)

IDENTIFICATION NUMBER: UN1013

PRODUCT RQ: None

SHIPPING LABEL(s): Nonflammable gas

PLACARD (when required): Nonflammable gas

SPECIAL SHIPPING INFORMATION: Cylinders should be transported in a secure upright position in a well ventilated truck. Never transport in passenger compartment of a vehicle.

SECTION 15. REGULATORY INFORMATION

U.S. FEDERAL REGULATIONS:

ENVIRONMENTAL PROTECTION AGENCY (EPA):

CERCLA: Comprehensive Environmental Response, Compensation, and Liability Act of 1980 requires notification to the National Response Center of a release of quantities of hazardous substances equal to or greater than the reportable quantities (RQ's) in 40 CFR 302.4.

CERCLA Reportable Quantity: None.

SARA TITLE III: Superfund Amendment and Reauthorization Act of 1986

SECTION 302/304: Requires emergency planning on threshold planning quantities (TPQ) and release reporting based on reportable quantities (RQ) of EPA's extremely hazardous substances (40 CFR 355).

Extremely Hazardous Substances: None

Threshold Planning Quantity (TPQ): None

SECTIONS 311/312: Require submission of material safety data sheets (MSDSs) and chemical inventory reporting with identification of EPA defined hazard classes. The hazard classes for this product are:

IMMEDIATE HEALTH: Yes	PRESSURE: Yes
DELAYED HEALTH: No	REACTIVITY: No
	FLAMMABLE: No

SECTION 313: Requires submission of annual reports of release of toxic chemicals that appear in 40 CFR 372.

Carbon dioxide does not require reporting under Section 313

40 CFR Part 68 - Risk Management for Chemical Accident Release Prevention: Requires the development and implementation of risk management programs at facilities that manufacture, use, store, or otherwise handle regulated substances in quantities that exceed specified thresholds.

Carbon dioxide is not listed as a regulated substance.

TSCA - TOXIC SUBSTANCES CONTROL ACT: Carbon dioxide is listed on the TSCA inventory.

OSHA - OCCUPATIONAL SAFETY AND HEALTH ADMINISTRATION:

29 CFR 1910.119: Process Safety Management of Highly Hazardous Chemicals. Requires facilities to develop a process safety management program based on Threshold Quantities (TQ) of highly hazardous chemicals.

Carbon dioxide is not listed in Appendix A as a highly hazardous chemical.

STATE REGULATIONS:

CALIFORNIA:

Proposition 65: This product does NOT contain any listed substances which the State of California requires warning under this statute.

SCAQMD Rule: VOC = Not applicable

SECTION 16. OTHER INFORMATION

HAZARD RATINGS:

NFPA RATINGS:		HMIS RATINGS:	
HEALTH:	1	HEALTH:	0
FLAMMABILITY:	0	FLAMMABILITY:	0
REACTIVITY:	0	REACTIVITY:	0
SPECIAL:	SA*		

*Compressed Gas Association recommendation to designate simple asphyxiant.

Revision information: New format with additional sections added. Reformatted September 1998.

AIR PRODUCTS

MATERIAL SAFETY DATA SHEET

SECTION 1. PRODUCT IDENTIFICATION

PRODUCT NAME: **Hydrogen, compressed**
CHEMICAL NAME: Hydrogen **FORMULA:** H_2
SYNONYMS: None
MANUFACTURER: **Air Products and Chemicals, Inc.**
7201 Hamilton Boulevard
Allentown, PA 18195-1501
PRODUCT INFORMATION: 1-800-752-1597
MSDS NUMBER: 1009 **REVISION:** 4
REVISION DATE: June 1994

SECTION 2. COMPOSITION/INFORMATION ON INGREDIENTS

Hydrogen is sold as pure product >99%

CAS NUMBER: 1333-74-0

EXPOSURE LIMITS:
OSHA: None **ACGIH:** Simple asphyxiant

SECTION 3. HAZARD IDENTIFICATION

EMERGENCY OVERVIEW

Hydrogen is a flammable, colorless, odorless, compressed gas packaged in cylinders at high pressure. It poses an immediate fire and explosive hazard when concentrations exceed 4%. It is much lighter than air and burns with an invisible flame. High concentrations that will cause suffocation are within the flammable range and must not be entered.

EMERGENCY TELEPHONE NUMBERS

(800) 523-9374 Continental U.S., Canada, and Puerto Rico
(610) 481-7711 other locations

POTENTIAL HEALTH EFFECTS INFORMATION:

INHALATION: Asphyxiant. It should be noted that before suffocation could occur, the lower flammability limit of hydrogen in air would be exceeded possibly causing both an oxygen-deficient and explosive atmosphere. Exposure to moderate concentrations may cause dizziness, headache, nausea and unconsciousness. Exposure to atmospheres containing 8-10% or less oxygen will quickly bring about unconsciousness without warning leaving individuals unable to protect themselves. Lack of sufficient oxygen may cause serious injury or death.

EYE CONTACT: None

SKIN CONTACT: None

CHRONIC EFFECTS: None

OTHER EFFECTS OF OVEREXPOSURE: None

EXPOSURE INFORMATION:

ROUTE OF ENTRY: Inhalation

TARGET ORGANS: None

EFFECT: Asphyxiation (suffocation)

SYMPTOMS: Exposure to an oxygen-deficient atmosphere (<19.5%) may cause dizziness, drowsiness, nausea, vomiting, excess salivation, diminished mental alertness, loss of consciousness, and death.

MEDICAL CONDITIONS AGGRAVATED BY OVEREXPOSURE: None

CARCINOGENIC POTENTIAL: Hydrogen is not listed by NTP, OSHA or IARC.

SECTION 4. FIRST AID

INHALATION: Persons suffering from lack of oxygen should be removed to fresh air. If victim is not breathing, administer artificial respiration. If breathing is difficult, administer oxygen. Obtain prompt medical attention.

SKIN CONTACT: None

EYE CONTACT: None

INGESTION: None

NOTES TO PHYSICIAN: None

SECTION 5. FIRE AND EXPLOSION

FLASH POINT:	AUTOIGNITION:	FLAMMABLE LIMITS:
Flammable gas	565.5_C (1050_F)	**LOWER:** 4% **UPPER:** 74%

EXTINGUISHING MEDIA: CO_2, dry chemical, water spray or fog for surrounding area. Do not extinguish until hydrogen source is shut off.

HAZARDOUS COMBUSTION PRODUCTS: None

SPECIAL FIRE FIGHTING INSTRUCTIONS: Evacuate all personnel from danger area. Immediately cool container with water spray from maximum distance, taking care not to extinguish flames. If flames are accidentally extinguished, explosive re-ignition may occur. Stop flow of gas if without risk while continuing cooling water spray.

UNUSUAL FIRE AND EXPLOSION HAZARDS: Burns with a pale blue, nearly invisible flame. Hydrogen is easily ignited with low-ignition energy, including static electricity. Hydrogen is lighter than air and can accumulate in the upper sections of enclosed spaces. Pressure in a container can build up due to heat, and it may rupture if pressure relief devices should fail to function.

SECTION 6. ACCIDENTAL RELEASE MEASURES

Evacuate immediate area. Eliminate any possible sources of ignition, and provide maximum explosion-proof ventilation. Shut off source of hydrogen, if possible. If leaking from cylinder, or valve, call the Air Products' emergency phone number. The presence of a hydrogen flame can be detected by approaching cautiously with an outstretched straw broom to make the flame visible.

SECTION 7. HANDLING AND STORAGE

STORAGE: Specific requirements are listed in NFPA 50A. Cylinder storage locations should be well-protected, well-ventilated, dry, and separated from combustible materials. Cylinders should never knowingly be allowed to reach a temperature exceeding 125 _F (52 _C). Cylinders of hydrogen should be separated from oxygen cylinders or other oxidizers by a minimum distance of 20 ft., or by a barrier of noncombustible material at least 5 ft. high having a fire resistance rating of at least _ hour.

Cylinders should be stored upright with valve protection cap in place and firmly secured to prevent falling or being knocked over. Protect cylinders from physical damage; do not drag, roll, slide or drop. Use a suitable hand truck for cylinder movement. Post "No Smoking or Open Flames" signs in the storage areas. There should be no sources of ignition. All electrical equipment should be explosion proof in the storage and use areas. Storage areas must meet national electric codes for class 1 hazardous areas.

HANDLING: Do not "open" hydrogen cylinder valve before connecting it, since self-ignition may occur. Hydrogen is the lightest gas known and may collect in the top of buildings with out proper ventilation. It may leak out of a system which is gas-tight for air or other gases. Leak check system with leak detection solution, never with flame. If user experiences difficulty operating cylinder valve, discontinue use and contact supplier. Use only approved CGA connections. DO NOT USE ADAPTERS. Never insert an object (e.g., wrench, screwdriver, pry bar, etc.) into valve cap openings. Doing so may damage valve, causing a leak to occur. Use an adjustable strap wrench to remove over-tight or rusted caps. Never strike an arc on a compressed gas cylinder or make a cylinder a part of an electrical circuit.

SPECIAL PRECAUTIONS: Use piping and equipment adequately designed to withstand pressures to be encountered. Use a check valve or other protective apparatus in any line or piping from the cylinder to prevent reverse flow.

SECTION 8. PERSONAL PROTECTION/EXPOSURE CONTROLS

ENGINEERING CONTROLS: Provide natural or explosion-proof ventilation adequate to ensure hydrogen does not reach its lower explosive limit of 4%.

RESPIRATORY PROTECTION:

General Use: None

Emergency Use: Air supplied respirators are required in oxygen-deficient atmospheres. Before entering area you must check for flammable or oxygen-deficient atmospheres.

PROTECTIVE GLOVES: Work gloves are recommended when handling cylinders.

EYE PROTECTION: Safety glasses are recommended when handling cylinders.

OTHER PROTECTIVE EQUIPMENT: Safety shoes are recommended when handling cylinders.

SECTION 9. PHYSICAL AND CHEMICAL PROPERTIES

APPEARANCE AND STATE: Colorless gas at normal temperature and pressure.

ODOR: Odorless

MOLECULAR WEIGHT: 2.016

BOILING POINT (1 atm): -423.0 _F (-252.8 _C)

SPECIFIC GRAVITY (Air =1): 0.06960

FREEZING POINT/MELTING POINT: -434.5 °F (-259.2 _C)

VAPOR PRESSURE (at 70 °F): Not applicable

GAS DENSITY (At 70 _F (21.1 _C) and 1 atm): 0.00521 lb/ft^3 (0.08342 kg/m^3)

SOLUBILITY IN WATER (Vol/Vol at 60 _ F (15.6 _C)): 0.019

SPECIFIC VOLUME (At 70 _F (21.1 _C) and 1 atm): 192 ft^3/lb (11.99m^3/kg)

SECTION 10. REACTIVITY/STABILITY

CHEMICAL STABILITY: Stable

CONDITIONS TO AVOID: None

INCOMPATIBILITY (Materials to Avoid): Oxidizing agents. Some steels are susceptible to hydrogen embrittlement at high pressures and temperatures.

REACTIVITY:

A) **HAZARDOUS DECOMPOSITION PRODUCTS:** None
B) **HAZARDOUS POLYMERIZATION:** Will not occur.

SECTION 11. TOXICOLOGICAL INFORMATION

Hydrogen is a simple asphyxiant.

SECTION 12. ECOLOGICAL INFORMATION

No adverse ecological effects are expected. Hydrogen does not contain any Class I or Class II ozone depleting chemicals (40 CFR Part 82). Hydrogen is not listed as a marine pollutant by DOT (49 CFR Part 171).

SECTION 13. DISPOSAL

WASTE DISPOSAL METHOD: Do not attempt to dispose of residual or unused product in the cylinder. Return to supplier for safe disposal.

Residual product within process system may be vented at a controlled rate, to the atmosphere through a vent stack that discharges to an elevated point. This stack should be in an isolated area away from ignition sources.

SECTION 14. TRANSPORTATION

DOT/IMO SHIPPING NAME: Hydrogen, compressed

HAZARD CLASS: 2.1 (Flammable Gas)

IDENTIFICATION NUMBER: UN1049

PRODUCT RQ: None

SHIPPING LABEL(s): Flammable gas.

PLACARD (When required): Flammable gas.

SPECIAL SHIPPING INFORMATION: Cylinder should be transported in a secure upright position in a well ventilated truck. NEVER TRANSPORT IN PASSENGER COMPARTMENT OF A VEHICLE.

Shipment of compressed gas cylinders which have not been filled with the owner's consent is a violation of Federal law (49 CFR Part 173.301 (b)).

SECTION 15. REGULATORY INFORMATION

U.S. FEDERAL REGULATIONS:

EPA - ENVIRONMENTAL PROTECTION AGENCY

CERCLA: Comprehensive Environmental Response, Compensation, and Liability Act of 1980 (40 CFR Parts 117 and 302):

Reportable Quantity (RQ): None

SARA: Superfund Amendment and Reauthorization Act

SECTION 302/304: Requires emergency planning on threshold planning quantities (TPQ) and release reporting based on reportable quantities (RQ) of EPA's extremely hazardous substances (40 CFR Part 355).

Extremely Hazardous Substances: None

Threshold Planning Quantity (TPQ): None

SECTIONS 311/312: Require submission of material safety data sheets (MSDSs) and chemical inventory reporting with identification of EPA defined hazard classes (40 CFR Part 370). The hazard classes for this product are:

IMMEDIATE:	No	PRESSURE:	Yes
DELAYED:	No	REACTIVITY:	No
		FLAMMABLE:	Yes

SECTION 313: Requires submission of annual reports of release of toxic chemicals that appear in 40 CFR Part 372.

Hydrogen does not require reporting under Section 313

40 CFR PART 68: Risk Management for Chemical Accidental Release. Requires the development and implementation of risk management programs at facilities that manufacture, use, store, or otherwise handle regulated substances in quantities that exceed specified thresholds.

Hydrogen is not listed as a regulated substance. However, any process that involves a flammable gas on site in one location, in quantities of 10,000 pounds (4,553 kg) or greater, is covered under this regulation.

TSCA: Toxic Substance Control Act: Hydrogen is listed on the TSCA inventory.

OSHA - OCCUPATIONAL SAFETY AND HEALTH ADMINISTRATION:

29 CFR 1910.119: Process Safety Management of Highly Hazardous Chemicals. Requires facilities to develop a process safety management program based on Threshold Quantities (TQ) of highly hazardous chemicals.

Hydrogen is not listed in Appendix A as a highly hazardous chemical. However, any process that involves a flammable gas on site in one location, in quantities of 10,000 pounds (4,553 kg) or greater is covered under this regulation unless it is used as fuel.

SECTION 16. OTHER INFORMATION

OTHER INFORMATION:

NFPA RATINGS:		**HMIS RATINGS:**	
HEALTH:	= 0	HEALTH:	= 0
FLAMMABILITY:	= 4	FLAMMABILITY:	= 4
REACTIVITY:	= 0	REACTIVITY:	= 0

SPECIAL: = SA (CGA recommends this to designate simple asphyxiant)

AIR PRODUCTS

MATERIAL SAFETY DATA SHEET

SECTION 1. PRODUCT IDENTIFICATION

PRODUCT NAME: **Oxygen, Compressed**

CHEMICAL NAME: **Oxygen** **FORMULA:** O_2

SYNONYMS: Oxygen gas, Gaseous Oxygen, GOX

MANUFACTURER: **Air Products and Chemicals, Inc.**
7201 Hamilton Boulevard
Allentown, PA 18195 - 1501

PRODUCT INFORMATION: 1-800-752-1597

MSDS NUMBER: 1012 **REVISION:** 5

REVISION DATE: January 1995 **REVIEW DATE:** August 1997**

SECTION 2. COMPOSITION / INFORMATION ON INGREDIENTS

Oxygen is sold as pure product > 99%.

CAS NUMBER: 7782-44-7

EXPOSURE LIMITS:

OSHA: Not established **ACGIH:** Not established **NIOSH:** Not established

SECTION 3. HAZARD IDENTIFICATION

EMERGENCY OVERVIEW

Oxygen is an odorless, colorless, nonflammable gas stored in cylinders at high pressure. It is an oxidizing gas and vigorously accelerates combustion. Keep away from oils or grease. Rescue personnel should be aware of the extreme fire hazards associated with oxygen-enriched (greater than 23%) atmospheres, and that self contained breathing apparatus (SCBA) may be required.

EMERGENCY TELEPHONE NUMBERS

(800) 523-9374 Continental U.S., Canada and Puerto Rico

(610) 481-7711 other locations

POTENTIAL HEALTH EFFECTS INFORMATION:

INHALATION: Breathing 80% or more oxygen at atmospheric pressure for more than a few hours may cause nasal stuffiness, cough, sore throat, chest pain and breathing difficulty. Breathing oxygen at higher pressure increases the likelihood of adverse effects within a shorter time period. Breathing pure oxygen under pressure may cause lung damage and also central nervous system effects resulting in dizziness, poor coordination, tingling sensation, visual and hearing disturbances, muscular twitching, unconsciousness and convulsions. Breathing oxygen under pressure may cause prolongation of adaptation to darkness and reduced peripheral vision.

EYE / SKIN CONTACT: No adverse effect.

EXPOSURE INFORMATION:

ROUTE OF ENTRY: Inhalation

TARGET ORGANS: Eyes, central nervous system

MEDICAL CONDITIONS AGGRAVATED BY OVEREXPOSURE: Patients with chronic obstructive pulmonary disease retain carbon dioxide abnormally. If oxygen is administered to them, raising the oxygen concentration in the blood depresses their breathing and raises their retained carbon dioxide to a dangerous level.

CARCINOGENIC POTENTIAL: Oxygen is not listed as a carcinogen or potential carcinogen by NTP, IARC, or OSHA Subpart Z.

SECTION 4. FIRST AID

INHALATION: Move victim to fresh air or if in elevated pressures reduce oxygen pressures to one atmosphere. Call a physician. The physician should be advised that the victim has been exposed to a high concentration of oxygen. No treatment is required in the absence of symptoms or high pressure exposure.

EYE / SKIN CONTACT: Not applicable

NOTES TO PHYSICIAN: Animal studies suggest that the administration of certain drugs, including phenothiazine drugs and chloroquine, increase the susceptibility to toxicity from oxygen at high pressures. Animal studies also indicate that vitamin "E" deficiency may increase susceptibility to oxygen toxicity.

Airway obstruction during high oxygen tension may cause alveolar collapse following absorption of the oxygen. Similarly, occlusion of the Eustachian tubes may cause retraction of the eardrum and obstruction of the paranasal sinuses may produce "vacuum-type" headache.

All individuals exposed for long periods to oxygen at high pressure and who exhibit overt oxygen toxicity should have ophthalmologic examinations.

SECTION 5. FIRE AND EXPLOSION

FLASH POINT:	AUTOIGNITION:	FLAMMABLE LIMITS:
Not applicable	Nonflammable	Nonflammable

EXTINGUISHING MEDIA: Oxygen is nonflammable but will support combustion. Use extinguishing media appropriate for surrounding fire.

HAZARDOUS COMBUSTION PRODUCTS: None

SPECIAL FIRE FIGHTING INSTRUCTIONS: Evacuate all personnel from the danger area. If possible, shut off flow of oxygen which is supporting the fire. Immediately cool containers with water spray from maximum distance. When cool move cylinders from fire area, if possible without risk. Self contained breathing apparatus may be required for rescue workers.

UNUSUAL FIRE AND EXPLOSION HAZARDS: Oxygen vigorously accelerates combustion. Some materials which are noncombustible in air will burn in the presence of an oxygen enriched atmosphere (greater than 23%). Fire resistant clothing may burn and offer no protection in oxygen rich atmospheres. Oxygen may form explosive compounds when exposed to combustible materials or oil, grease, and other hydrocarbon materials. Pressure in a container can build up due to heat and it may rupture if pressure relief devices should fail to function. Upon exposure to intense heat or flame cylinder will vent rapidly and/or rupture violently. Most cylinders are designed to vent contents when exposed to elevated temperatures. Pressure in a container can build up due to heat and it may rupture if pressure relief devices should fail to function.

SECTION 6. ACCIDENTAL RELEASE MEASURES

Evacuate all personnel from affected area. Shut off source of oxygen if possible. Increase ventilation to release area. Personnel who have been exposed to high concentrations of oxygen should stay in a well-ventilated or open area for 30 minutes before going into a confined space or near an ignition source.
If leak is from container or its valve, call the Air Products emergency telephone number. If leak is in user's system close cylinder valve and vent pressure before attempting repairs.

SECTION 7. STORAGE AND HANDLING

STORAGE: Cylinders should be stored upright in a well-ventilated, secure area, protected from the weather. Storage area temperatures should not exceed 125 °F (52 °C) and area should be free of combustible materials. Storage should be away from heavily traveled areas and emergency exits. Avoid areas where salt or other corrosive materials are present. Cylinders should be separated from flammables by a minimum distance of 20 ft. or by a barricade of non-combustible material at least five ft. high having a fire resistance rating of at least 1/2 hour. Valve protection caps and valve outlet seals should remain on cylinders not connected for use. Separate full from empty cylinders. Avoid excessive inventory and storage time. Use a first-in first-out system. Keep good inventory records.

HANDLING: Do not drag, roll, or slide cylinder. Use a suitable handtruck designed for cylinder movement. Never attempt to lift a cylinder by its cap. Secure cylinders at all times while in use. Use a pressure reducing regulator or separate control valve to safely discharge gas from cylinder. Use a check valve to prevent reverse flow into cylinder. Do not overheat cylinder to increase pressure or discharge rate. Always open cylinder valve slowly. Do not use rapid opening valves (i.e., ball valves). If user experiences any difficulty operating cylinder valve, discontinue use and contact supplier. Never insert an object (e.g., wrench, screwdriver, pry bar, etc.) into valve cap openings. Doing so may damage valve causing a leak to occur. Use an adjustable strap-wrench to remove over-tight or rusted caps.

All gauges, valves, regulators, piping and equipment to be used in oxygen service must be cleaned for oxygen service in accordance with Compressed Gas Association pamphlet G-4.1.

Carbon steel, stainless steel, copper, brass, nickel and their alloys are materials of construction that can be used in oxygen service. Use piping and equipment adequately designed to withstand pressures to be encountered. Oxygen is not to be used as a substitute for compressed air. Never use an oxygen jet for cleaning purposes of any sort, especially clothing, as it increases the likelihood of an engulfing fire. Use a check valve or other protective apparatus in any line or piping from the cylinder to prevent reverse flow.

When used in welding and cutting read and understand the manufacturer's instructions and the precautionary label on the products. Never strike an arc on a compressed gas cylinder or make a cylinder a part of an electrical circuit.

SPECIAL REQUIREMENTS: Always store and handle compressed gases in accordance with Compressed Gas Association, Inc. (ph. 703-412-0900) pamphlet CGA P-1, *Safe Handling of Compressed Gases in Containers*. Local regulations may require specific equipment for storage or use.

CAUTION: Compressed gas cylinders shall not be refilled except by qualified producers of compressed gases. Shipment of a compressed gas cylinder which has not been filled by the owner or with the owner's written consent is a violation of federal law.

SECTION 8. PERSONAL PROTECTION / EXPOSURE CONTROL

ENGINEERING CONTROLS: Provide ventilation and/or local exhaust to prevent accumulation of high concentrations of gas (greater than 23%).

RESPIRATORY PROTECTION:

GENERAL USE: None required

EMERGENCY: Use SCBA do to possibility of fire when concentrations exceed 23%.

OTHER PROTECTIVE EQUIPMENT: Safety shoes and work gloves are recommended when handling cylinders. Clothing exposed to high concentrations may retain oxygen 30 minutes or longer and become a potential fire hazard. Stay away from ignition sources.

SECTION 9. PHYSICAL AND CHEMICAL PROPERTIES

APPEARANCE: Colorless gas

ODOR: Odorless

MOLECULAR WEIGHT: 32.0

BOILING POINT (1 atm): -297.3 °F (-183.0 °C)

SPECIFIC GRAVITY (Air =1): 1.10

SPECIFIC VOLUME (at 70 °F 21.1 °C) and 1 atm): 12.08 ft^3/lb (0.754 m^3/kg)

FREEZING / MELTING POINT: -361.9 °F (-218.8 °C)

VAPOR PRESSURE: Not applicable at 70°F

GAS DENSITY (At 70°F (21.1°C) and 1 Atm): 0.083 lb /ft^3 (1.326 kg/m^3)

SOLUBILITY IN WATER (Vol./Vol. at 32°F (0°C)): 0.049

SECTION 10. REACTIVITY / STABILITY

CHEMICAL STABILITY: Stable

CONDITIONS TO AVOID: None

INCOMPATIBILITY: Oils, grease, hydrocarbons and flammable materials.

HAZARDOUS DECOMPOSITION PRODUCTS: None

HAZARDOUS POLYMERIZATION: Will not occur

SECTION 11. TOXICOLOGICAL INFORMATION

At atmospheric concentration and pressure, oxygen poses no toxicity hazards.

Premature infants exposed to high oxygen concentrations may suffer delayed retinal damage which can progress to retinal detachment and blindness. Retinal damage may also occur in adults exposed to 100% oxygen for extended periods (24 to 48 hr).

At two or more atmospheres central nervous system (CNS) toxicity occurs. Symptoms include nausea, vomiting, dizziness or vertigo, muscle twitching, vision changes, and loss of consciousness and generalized seizures. At three atmospheres, CNS toxicity occurs in less than two hours, and at six atmospheres in only a few minutes.

SECTION 12. ECOLOGICAL INFORMATION

The atmosphere contains 21% oxygen. No adverse ecological effects are expected. Oxygen does not contain any Class I or Class II ozone depleting chemicals. Oxygen is not listed as a marine pollutant by DOT (49 CFR 171).

SECTION 13. DISPOSAL

UNUSED PRODUCT / EMPTY CONTAINER: Return container and unused product to supplier. Do not attempt to dispose of residual or unused quantities.

DISPOSAL: For emergency disposal, secure cylinder and slowly discharge gas to the atmosphere in a well ventilated area or outdoors.

SECTION 14. TRANSPORTATION

DOT HAZARD CLASS: 2.2 (Nonflammable Gas)

DOT SHIPPING LABEL: Nonflammable Gas, Oxidizer

DOT SHIPPING NAME: Oxygen, compressed

IDENTIFICATION NUMBER: UN 1072

REPORTABLE QUANTITY (RQ): None

PLACARD: Nonflammable Gas or Oxygen

SPECIAL SHIPPING INFORMATION: Cylinders should be transported in a secure upright position in a well ventilated truck. Never transport in passenger compartment of a vehicle. An oxygen label may be used for domestic shipment in the United States and Canada in place of the Non-flammable and Oxidizer labels (49CFR Part 172).

SECTION 15. REGULATORY INFORMATION

U.S. FEDERAL REGULATIONS:

EPA - ENVIRONMENTAL PROTECTION AGENCY:

CERCLA: Comprehensive Environmental Response, Compensation, and Liability Act of 1980 requires notification to the National Response Center of releases of quantities of hazardous substances equal to or greater than the reportable quantities (RQ) in 40 CFR 302.4.

CERCLA Reportable Quantity: None

SARA TITLE III: Superfund Amendments and Reauthorization Act of 1986

SECTION 302: Requires emergency planning based on threshold planning quantities (TPQ) and release reporting based on reportable quantities (RQ) of EPA's extremely hazardous substances (40 CFR 355).

Oxygen is not listed as an Extremely Hazardous Substance.

SECTIONS 311/312: Require submission of material safety data sheets (MSDSs) and chemical inventory reporting with identification of EPA defined hazard classes. The hazard classes for this product are:

IMMEDIATE:	No	PRESSURE:	Yes
DELAYED:	No	REACTIVITY:	No
		FIRE:	Yes

SECTION 313: Requires submission of annual reports of releases of toxic chemicals that appear in

40 CFR 372.

Oxygen is not listed as a toxic chemical.

40 CFR PART 68: Risk Management for Chemical Accident Release Prevention. Requires the development and implementation of risk management programs at facilities that manufacture, use, store, or otherwise handle regulated substances in quantities that exceed specified thresholds.

Oxygen is not listed as a regulated substance.

TOXIC SUBSTANCE CONTROL ACT (TSCA): Oxygen is listed on the TSCA inventory.

OSHA - OCCUPATIONAL SAFETY AND HEALTH ADMINISTRATION

29 CFR 1910.119: Process Safety Management of Highly Hazardous Chemicals. Requires facilities to develop a process safety management program based on Threshold Quantities (TQ) of highly hazardous chemicals.

Oxygen is not listed as a Highly Hazardous Chemical.

STATE REGULATIONS

CALIFORNIA:

Proposition 65: This product does NOT contain any listed substances for which the State of California requires warning under this statute.

SCAQMD Rule: VOC = Not applicable

SECTION 16. SUPPLEMENTAL INFORMATION

HAZARD RATINGS:

NFPA RATINGS:		HMIS RATINGS:	
HEALTH:	0	HEALTH:	0
FLAMMABILITY:	0	FLAMMABILITY:	0
REACTIVITY:	0	REACTIVITY:	0
SPECIAL:	OX (oxidizer)		

**Documents with Revision Date January 1995 and Review Date August 1997 are identical in content and either may be used.

AIR PRODUCTS

MATERIAL SAFETY DATA SHEET

SECTION 1. PRODUCT IDENTIFICATION

PRODUCT NAME: **Nitrogen, compressed**
CHEMICAL NAME: Nitrogen
FORMULA: N_2
SYNONYMS: Nitrogen gas, Gaseous Nitrogen, GAN

MANUFACTURER: **Air Products and Chemicals, Inc.**
7201 Hamilton Boulevard
Allentown, PA 18195 - 1501

PRODUCT INFORMATION: 1-800-752-1597
MSDS NUMBER: 1011 **REVISION:** 5
REVISION DATE: March 1994 **REVIEW DATE:**
August 1997

SECTION 2. COMPOSITION/INFORMATION ON INGREDIENTS

Nitrogen is sold as pure product > 99%.
CAS NUMBER: 7727-37-9
EXPOSURE LIMITS:
OSHA: Not established **ACGIH:** Simple asphyxiant **NIOSH:** Not established

SECTION 3. HAZARDS IDENTIFICATION

EMERGENCY OVERVIEW

Nitrogen is a nontoxic, odorless, colorless, nonflammable compressed gas stored in cylinders at high pressure. It can cause rapid suffocation when concentrations are sufficient to reduce oxygen levels below 19.5%. Self Contained Breathing Apparatus (SCBA) may be required.

EMERGENCY TELEPHONE NUMBERS
800-523-9374 Continental U.S. , Canada and Puerto Rico
610-481-7711 other locations

POTENTIAL HEALTH EFFECTS INFORMATION:

INHALATION: Simple asphyxiant. Nitrogen is nontoxic, but may cause suffocation by displacing the oxygen in air. Lack of sufficient oxygen can cause serious injury or death.

EYE CONTACT: No adverse effect.

SKIN CONTACT: No adverse effect.

EXPOSURE INFORMATION:

ROUTE OF ENTRY: Inhalation

TARGET ORGANS: None

EFFECT: Asphyxiation (suffocation)

SYMPTOMS: Exposure to an oxygen deficient atmosphere (<19.5%) may cause dizziness, drowsiness, nausea, vomiting, excess salivation, diminished mental alertness, loss of consciousness and death. Exposure to atmospheres containing 8-10% or less oxygen will bring about unconsciousness without warning and so quickly that the individuals cannot help themselves.

MEDICAL CONDITIONS AGGRAVATED BY OVEREXPOSURE: None

CARCINOGENIC POTENTIAL: Nitrogen is not listed as a carcinogen or potential carcinogen by NTP, IARC, or OSHA .

SECTION 4. FIRST AID

INHALATION: Persons suffering from lack of oxygen should be moved to fresh air. If victim is not breathing, administer artificial respiration. If breathing is difficult, administer oxygen. Obtain prompt medical attention.

EYE CONTACT: Not applicable.

SKIN CONTACT: Not applicable.

SECTION 5. FIRE AND EXPLOSION

FLASH POINT:	AUTOIGNITION:	FLAMMABLE LIMITS:
Not applicable	Nonflammable	Nonflammable

EXTINGUISHING MEDIA: Nitrogen is nonflammable and does not support combustion. Use extinguishing media appropriate for the surrounding fire.

HAZARDOUS COMBUSTION PRODUCTS: None

SPECIAL FIRE FIGHTING INSTRUCTIONS: Nitrogen is a simple asphyxiant. If possible, remove nitrogen cylinders from fire area or cool with water. SCBA may be required by rescue workers.

UNUSUAL FIRE AND EXPLOSION HAZARDS: Upon exposure to intense heat or flame cylinder may vent rapidly and/or rupture violently. Most cylinders are designed to vent contents when exposed to elevated temperatures. Pressure in a container can build up due to heat and it may rupture if pressure relief devices should fail to function.

SECTION 6. ACCIDENTAL RELEASE MEASURES

Evacuate all personnel from affected area. Increase ventilation to release area and monitor oxygen level. Use appropriate protective equipment (SCBA). If leak is from container or its valve, call the Air Products emergency telephone number. If leak is in user's system close cylinder valve and vent pressure before attempting repairs.

SECTION 7. HANDLING AND STORAGE

STORAGE: Cylinders should be stored upright in a well-ventilated, secure area, protected from the weather. Storage area temperatures should not exceed 125 °F (52 °C) and area should be free of combustible materials. Storage should be away from heavily traveled areas and emergency exits. Avoid areas where salt or other corrosive materials are present. Valve protection caps and valve outlet seals should remain on cylinders not connected for use. Separate full from empty cylinders. Avoid excessive inventory and storage time. Use a first-in first-out system. Keep good inventory records.

HANDLING: Do not drag, roll, or slide cylinder. Use a suitable handtruck designed for cylinder movement. Never attempt to lift a cylinder by its cap. Secure cylinders at all times while in use. Use a pressure reducing regulator or separate control valve to safely discharge gas from cylinder. Use a check valve to prevent reverse flow into cylinder. Do not overheat cylinder to increase pressure or discharge rate. If user experiences any difficulty operating cylinder valve, discontinue use and contact supplier. Never insert an object (e.g., wrench, screwdriver, pry bar, etc.) into valve cap openings. Doing so may

damage valve causing a leak to occur. Use a special cap wrench or adjustable strap-wrench to remove over-tight or rusted caps.

Nitrogen is compatible with all common materials of construction. Pressure requirements should be considered when selecting materials and designing systems.

SPECIAL REQUIREMENTS: Always store and handle compressed gases in accordance with Compressed Gas Association, Inc. (ph. 703-412-0900) pamphlet CGA P-1, *Safe Handling of Compressed Gases in Containers*. Local regulations may require specific equipment for storage or use.

CAUTION: Users of nitrogen must be aware of the hazards caused by the accumulation of high concentrations, especially in confined spaces. Compliance with OSHA regulations, especially 29 CFR 1910.146 (confined space entry), is essential

SECTION 8. PERSONAL PROTECTION / EXPOSURE CONTROL

ENGINEERING CONTROLS: Provide good ventilation and/or local exhaust to prevent accumulation of high concentrations of gas. Oxygen levels in work area should be monitored to ensure they do not fall below 19.5%.

RESPIRATORY PROTECTION:

GENERAL USE: None required.

EMERGENCY: Use SCBA or positive pressure air line with mask and escape pack in areas where oxygen concentration is less than 19.5%. Air purifying respirators will not provide protection.

OTHER PROTECTIVE EQUIPMENT: Safety glasses. Safety shoes and leather work gloves are recommended when handling cylinders.

SECTION 9. PHYSICAL AND CHEMICAL PROPERTIES

APPEARANCE: Colorless gas

ODOR: Odorless

MOLECULAR WEIGHT: 28.01

BOILING POINT (1 Atm): -320.4 °F (-195.8 °C)

SPECIFIC GRAVITY (Air =1): 0.967

SPECIFIC VOLUME (at 70 °F (21.1 °C) and 1 atm): 13.81 ft^3/lb (0.867m^3/kg)

FREEZING POINT/MELTING POINT: -345.8 °F (-209.9 °C)

VAPOR PRESSURE: Not applicable at 70 °F

GAS DENSITY (at 70 °F (21.1 °C) and 1 atm): 0.072 lb/ft^3 (1.153 kg/m^3)

SOLUBILITY IN WATER (Vol./Vol. at 32°F (0°C)): 0.023

SECTION 10. STABILITY AND REACTIVITY

CHEMICAL STABILITY: Stable

CONDITIONS TO AVOID: None

INCOMPATIBILITY: None

HAZARDOUS DECOMPOSITION PRODUCTS: None

HAZARDOUS POLYMERIZATION: Will not occur.

SECTION 11. TOXICOLOGICAL INFORMATION

Nitrogen is a simple asphyxiant.

SECTION 12. ECOLOGICAL INFORMATION

The atmosphere contains approximately 78% nitrogen. No adverse ecological effects are expected. Nitrogen does not contain any Class I or Class II ozone depleting chemicals. Nitrogen is not listed as a marine pollutant by DOT (49 CFR 171).

SECTION 13. DISPOSAL

UNUSED PRODUCT / EMPTY CONTAINER: Return cylinder and unused product to supplier. Do not attempt to dispose of residual or unused quantities.

DISPOSAL: For emergency disposal, secure the cylinder and slowly discharge gas to the atmosphere in a well ventilated area or outdoors.

SECTION 14. TRANSPORT INFORMATION

DOT HAZARD CLASS: 2.2

DOT SHIPPING LABEL: Nonflammable Gas

DOT SHIPPING NAME: Nitrogen, Compressed

IDENTIFICATION NUMBER: UN1066

REPORTABLE QUANTITY (RQ): None

SPECIAL SHIPPING INFORMATION: Cylinders should be transported in a secure upright position in a well ventilated truck. Never transport in passenger compartment of a vehicle.

Compressed gas cylinders shall not be refilled except by qualified producers of compressed gases. Shipment of a compressed gas cylinder which has not been filled by the owner or with the owner's written consent is a violation of federal law.

SECTION 15. REGULATORY INFORMATION

U.S. FEDERAL REGULATIONS:

ENVIRONMENTAL PROTECTION AGENCY (EPA):

CERCLA: Comprehensive Environmental Response, Compensation, and Liability Act of 1980 requires notification to the National Response Center of a release of quantities of hazardous substances equal to or greater than their reportable quantities (RQ's) in 40 CFR 302.4.

CERCLA Reportable Quantity: None.

SARA TITLE III: Superfund Amendment and Reauthorization Act of 1986

SECTION 302/304: Requires emergency planning on threshold planning quantities (TPQ) and release reporting based on reportable quantities (RQ) of EPA's extremely hazardous substances (40 CFR 355).

Nitrogen is not listed as an extremely hazardous substance.

Threshold Planning Quantity (TPQ): None

SECTIONS 311/312: Require submission of material safety data sheets (MSDSs) and chemical inventory reporting with identification of EPA defined hazard classes. The hazard classes for this product are:

IMMEDIATE HEALTH: No	PRESSURE: Yes
DELAYED HEALTH: No	REACTIVITY: No
	FIRE: No

SECTION 313: Requires submission of annual reports of release of toxic chemicals that appear in 40 CFR 372.

Nitrogen does not require reporting under Section 313.

40 CFR Part 68 - Risk Management for Chemical Accident Release Prevention: Requires the development and implementation of risk management programs at facilities that manufacture, use, store, or otherwise handle regulated substances in quantities that exceed specified thresholds.

Nitrogen is not listed as a regulated substance.

TSCA - TOXIC SUBSTANCES CONTROL ACT: Nitrogen is listed on the TSCA inventory.

OSHA - OCCUPATIONAL SAFETY AND HEALTH ADMINISTRATION:

29 CFR 1910.119 - Process Safety Management of Highly Hazardous Chemicals: Requires facilities to develop a process safety management program based on Threshold Quantities (TQ) of highly hazardous chemicals.

Nitrogen is not listed in Appendix A as a highly hazardous chemical.

STATE REGULATIONS

CALIFORNIA:

Proposition 65: This product does NOT contain any listed substances which the State of California requires warning under this statute.

SCAQMD Rule: VOC = Not applicable

SECTION 16. OTHER INFORMATION

NFPA RATINGS:		HMIS RATINGS:	
HEALTH:	0	HEALTH:	0
FLAMMABILITY:	0	FLAMMABILITY:	0
REACTIVITY:	0	REACTIVITY:	0
SPECIAL:	SA*		

*Compressed Gas Association recommendation to designate simple asphyxiant.

*** Documents with Review Dates August 1997 and Revision Date March 1994 are identical in content and either may be used.*

MATERIAL SAFETY DATA SHEET

1. CHEMICAL PRODUCT AND COMPANY IDENTIFICATION

Product Name: Glucose
Catalog Number: 1125153

Hach Company
P.O.Box 389
Loveland, CO USA 80539
(970) 669-3050

Emergency Telephone Numbers:
(Medical and Transportation)
(303) 623-5716 24 Hour Service
(515)232-2533 8am - 4pm CST

MSDS Number: M00664
Chemical Name: D-Glucose
CAS No.: 50-99-7
Chemical Formula: $C_6H_{12}O_6$
Chemical Family: Heterocyclic Compounds
PIN: NA
Intended Use: Laboratory Reagent
Date of MSDS Preparation:
Day: 23
Month: 09
Year: 2005
MSDS Prepared: MSDS prepared by Product Compliance Department extension 3350

2. COMPOSITION / INFORMATION ON INGREDIENTS

Glucose
Percent Range: 100.0
Percent Range Units: weight / weight
CAS No.: 50-99-7
LD50: Oral rat LD50 = 25800 mg/kg
LC50: None reported
TLV: Not established
PEL: Not established
Ingredient WHMIS Symbol: Not applicable

3. HAZARDS IDENTIFICATION

Emergency Overview:
Appearance: White crystals
Physical State: Solid
Odor: Odorless

HMIS:
Health: 0
Flammability: 1
Reactivity: 0
Protective Equipment: X - See protective equipment, Section 8.
Potential Health Effects:
Eye Contact: No effects are anticipated

Skin Contact: No effects are anticipated
Skin Absorption: No effects anticipated
Target Organs: Not applicable
Ingestion: Very large doses may cause: gastrointestinal disturbances
Target Organs: None reported
Inhalation: No effects anticipated
Target Organs: Not applicable
Medical Conditions Aggravated: None reported
Chronic Effects: No effects anticipated
Cancer / Reproductive Toxicity Information:
IARC Listed: No

NTP Listed: No

Additional Cancer / Reproductive Toxicity Information: None reported
Toxicologically Synergistic Products: None reported
WHMIS Hazard Classification: Not applicable
WHMIS Symbols: Not applicable

4. FIRST AID

Eye Contact: Flush eyes with water. Call physician if irritation develops.
Skin Contact (First Aid): Wash skin with plenty of water.
Ingestion (First Aid): Give large quantities of water. Call physician immediately.
Inhalation: None required.

5. FIRE FIGHTING MEASURES

Flammable Properties: Can burn in fire, releasing toxic vapors.
Flash Point: Not applicable
Method: Not applicable
Flammability Limits:
Lower Explosion Limits: Not applicable
Upper Explosion Limits: Not applicable
Autoignition Temperature: Not available
Hazardous Combustion Products: Toxic fumes of: carbon monoxide, carbon dioxide.
Fire / Explosion Hazards: May react violently with: strong oxidizers
Static Discharge: None reported.
Mechanical Impact: None reported
Extinguishing Media: Use media appropriate to surrounding fire conditions
Fire Fighting Instruction: As in any fire, wear self-contained breathing apparatus pressure-demand and full protective gear.

6. ACCIDENTAL RELEASE MEASURES

Spill Response Notice:
Only persons properly qualified to respond to an emergency involving hazardous substances should respond to a spill involving chemicals. See Section 13, Special Instructions for disposal assistance.
Containment Technique: Stop spilled material from being released to the environment.
Clean-up Technique: Scoop up spilled material into a large beaker and dissolve with water. Flush the spilled material to the drain with a large excess of water. Decontaminate the area of the spill with a soap solution.
Evacuation Procedure: Evacuate as needed to perform spill clean-up. If conditions warrant, increase the size of the evacuation.
D.O.T. Emergency Response Guide Number: None

7. HANDLING / STORAGE

Handling: Wash thoroughly after handling. Maintain general industrial hygiene practices when using this product.

Storage: Protect from: heat Keep away from: oxidizers

8. EXPOSURE CONTROLS / PROTECTIVE EQUIPMENT

Engineering Controls: Maintain general industrial hygiene practices when using this product.
Personal Protective Equipment:
Eye Protection: safety glasses with top and side shields
Skin Protection: Not applicable
Inhalation Protection: adequate ventilation
Precautionary Measures: Wash thoroughly after handling. Protect from: heat Keep away from: oxidizers
TLV: Not established
PEL: Not established

9. PHYSICAL / CHEMICAL PROPERTIES

Appearance: White crystals
Physical State: Solid
Molecular Weight: 180.18
Odor: Odorless
pH: 0.5M solution = 5.9
Vapor Pressure: Not applicable
Vapor Density (air = 1): Not applicable
Boiling Point: Not applicable
Melting Point: 146°C; 295°F
Specific Gravity (water = 1): 1.544
Evaporation Rate (water = 1): Not applicable
Volatile Organic Compounds Content: Not applicable
Coefficient of Water / Oil: Not available
Solubility:
Water: Soluble
Acid: Soluble
Other: Alcohol
Metal Corrosivity:
Steel: Not determined
Aluminum: Not determined

10. STABILITY / REACTIVITY

Chemical Stability: Stable when stored under proper conditions.
Conditions to Avoid: Heat
Reactivity / Incompatibility: Incompatible with: oxidizers
Hazardous Decomposition: Heating to decomposition releases toxic fumes of carbon monoxide and carbon dioxide.
Hazardous Polymerization: Will not occur.

11. TOXICOLOGICAL INFORMATION

Product Toxicological Data:
LD50: Oral rat LD50 = 25800 mg/kg
LC50: None reported
Dermal Toxicity Data: None reported
Skin and Eye Irritation Data: None reported
Mutation Data: No mammalian data reported
Reproductive Effects Data: Intraperitoneal rat TDLo = 300 g/kg (30 day pregnant): Reproductive effects
--
Ingredient Toxicological Data: --
Not applicable

12. ECOLOGICAL INFORMATION

Product Ecological Information: --
No ecological data available for this product.
Ingredient Ecological Information: --
Not applicable

13. DISPOSAL CONSIDERATIONS

Special Instructions (Disposal): Dilute to 3 to 5 times the volume with cold water. Open cold water tap completely, slowly pour the material to the drain. Allow cold water to run for 5 minutes to completely flush the system.
Empty Containers: Rinse three times with an appropriate solvent. Dispose of empty container as normal trash.
NOTICE (Disposal): These disposal guidelines are based on federal regulations and may be superseded by more stringent state or local requirements. Please consult your local environmental regulators for more information.

14. TRANSPORT INFORMATION

T.D.G.:
Proper Shipping Name: Not Currently Regulated
--
Hazard Class: NA
PIN: NA
Group: NA
Subsidiary Risk: NA
Additional Information: This product may be shipped as part of a chemical kit composed of various compatible dangerous goods for analytical or testing purposes. This kit would have the following classification: Proper Shipping Name: Chemical Kit Hazard Class: 9 UN Number 3316

15. REGULATORY INFORMATION

National Inventories:
Canadian Inventory Status: DSL Listed: Yes
This product has been classified in accordance with the hazard criteria of the CPR and the MSDS contains all of the information required by the CPR.

16. OTHER INFORMATION

References: 29 CFR 1900 - 1910 (Code of Federal Regulations - Labor). Air Contaminants, Federal Register, Vol. 54, No. 12. Thursday, January 19, 1989. pp. 2332-2983. TLV's Threshold Limit Values and Biological Exposure Indices for 1992-1993. American Conference of Governmental Industrial Hygienists, 1992. CCINFO RTECS. Canadian Centre for Occupational Health and Safety. Hamilton, Ontario Canada: 30 June 1993. Vendor Information. Technical Judgment. Sax, N. Irving. Dangerous Properties of Industrial Materials, 7th Ed. New York: Van Nostrand Reinhold Co., 1989.

Legend:

NA - Not Applicable	w/w - weight/weight
ND - Not Determined	w/v - weight/volume
NV - Not Available	v/v - volume/volume

USER RESPONSIBILITY: Each user should read and understand this information and incorporate it in individual site safety programs in accordance with applicable hazard communication standards and regulations.

THE INFORMATION CONTAINED HEREIN IS BASED ON DATA CONSIDERED TO BE ACCURATE. HOWEVER, NO WARRANTY IS EXPRESSED OR IMPLIED REGARDING THE ACCURACY OF THESE DATA OR THE RESULTS TO BE OBTAINED FROM THE USE THEREOF.

HACH COMPANY ©2005

GRAYMONT

MATERIAL SAFETY DATA SHEET

SECTION I - CHEMICAL PRODUCT AND COMPANY INFORMATION

Product Name:	HIGH CALCIUM HYDRATED LIME	WHMIS – CLASSIFICATION: D2A: MATERIALS CAUSING OTHER TOXIC EFFECTS E: CORROSIVE MATERIAL

MANUFACTURER'S AND SUPPLIER'S NAME:

GRAYMONT (NB) INC	4634, Route 880, Havelock, New Brunswick, E4Z 5K8.
GRAYMONT (PA) INC.	194, Match Factory Place, Bellefonte, Pennsylvania, 16823
GRAYMONT (QC) INC.	25 – 206, rue De Lauzon, Boucherville, Québec, J4B 1E7.
GRAYMONT (WESTERN CANADA) INC.	#260 – 4311, 12th Street N.E., Calgary, Alberta, T2E 4P9
GRAYMONT WESTERN LIME INC.	206 N. 6th Avenue, West Bend, Wisconsin, 53095
GRAYMONT (WESTERN US) INC.	3950 South, 700 East, Suite 301, Salt Lake City, Utah, 84107
GRAYMONT (WI) INC.	Foot of Hill Avenue, Superior, Wisconsin, 54880

EMERGENCY TEL. No.: (613) 996 – 6666 CANUTEC (Canada) (800) 424 – 9300 CHEMTREC (US)

Chemical Name	Chemical Family	Chemical Formula
Calcium hydroxide	**Alkaline earth hydroxide**	**Complex mixture - mostly $Ca(OH)_2$**
Molecular Weight	Trade Name and Synonyms	Material Use
$Ca(OH)_2$ = 74.096	**Hydrated Lime, Lime, Slaked lime, Lime Putty, Lime Slurry, Milk of Lime, Calcium Hydroxide**	**Neutralization, Flocculation, Stabilization, absorption**

SECTION II - COMPOSITION AND INFORMATION ON INGREDIENTS

Hazardous Ingredients	Approximate Concentration (% by weight)	C.A.S. Number	Exposure limits (mg/m^3)					
			OSHA PEL	ACGIH TLV	RSST VEMP	MSHA PEL	NIOSH REL	NIOSH IDLH
(Complex Mixture)	(% by weight)		(TWA) 8/40h	(TWA) 8/40h	(TWA) 8/40h	(TWA) 8/40h	(TWA) 10/40h	
Calcium hydroxide	**92 to 100**	**1305-62-0**	**15 (T) 5 (R)**	**5**	**5**	**5**	**5**	**N/A**
Crystalline Silica, Quartz	**0 à 0.1 Or 0.1 à 1 (Note 1)**	**14808-60-7**	**$30/(\%SiO_2)+2$ (T) $10/(\%SiO_2)+2$ (R)**	**0.025 (R)**	**0.1 (R)**	**$30/(\%SiO_2)+2$ (T) $10/(\%SiO_2)+2$ (R)**	**0.05 (R)**	**50**

(**Note 1**): Concentration of crystalline silica in a series of lime products will vary from source to source. It was not detected on some samples (< 0.1% w/w). Therefore two ranges are being disclosed. (**Note 2**): **ACGIH TLV** Version 1973 has been adopted by the Mine Safety Health Administration (**MSHA**) as the regulatory Exposure Standard. (**Note 3**): (**T**) Total Dust; (**R**): Respirable Dust.

SECTION III - PHYSICAL AND CHEMICAL DATA

Physical State	Odor and Appearance		Odor Threshold (p.p.m.)	Specific Gravity
Gas ☐ Liquid ☐ Solid ☑	**Slight earthy odor – Fine white powder**		**Not applicable**	**2.3 – 2.4**
Vapor Pressure (mm)	Vapor Density (Air = 1)	Evaporation Rate	Boiling Point (°C)	Melting Point (°C)
Not applicable	**Not applicable**	**Not applicable**	**Not applicable**	**Not applicable**
Solubility in Water (20°C)	Volatiles (% by volume)	pH (25 °C)	Bulk Density (kg/m^3)	Coefficient of water/oil distribution
0.165g/100g solution	**Not applicable**	**Sat. soln $Ca(OH)_2$ 12.45**	**320 - 690**	**Not applicable**

SECTION IV - FIRE OR EXPLOSION HAZARD DATA

Flammability

Yes ☐ No ☑ If yes, under which conditions?

Extinguishing Media

Calcium Hydroxide does not burn. Use extinguishing media appropriate to surrounding fire conditions.

Special Fire Fighting Procedures

Not applicable

Flash point (°C) and Method	Upper flammable limit (% by volume)	Lower flammable limit (% by volume)
Not applicable	**Not applicable**	**Not applicable**
Auto Ignition Temperature (°C)	TDG Flammability Classification	Hazardous Combustion Products
Not applicable	**Non-flammable**	**None**

Dangerous Combustion Products **None**

EXPLOSION DATA

Sensitivity to Chemical Impact	Rate of Burning	Explosive Power	Sensitivity to Static Discharge
Not applicable	**Not applicable**	**Not applicable**	**Not applicable**

SECTION V - REACTIVITY DATA

Chemical Stability Yes ☑ No ☐	If no, under which conditions?	**Absorbs carbon dioxide in the air to form calcium carbonate.**
Incompatibility to other substances Yes ☑ No ☐	If so, which ones?	**Boron tri-fluoride, chlorine tri-fluoride, ethanol, fluorine, hydrogen fluoride, phosphorus pentoxide; and acids (violent reaction with generating heat and possible explosion in confined area).**
Reactivity Yes ☑ No ☐	If so, under which conditions?	**Reacts violently with strong acids. Reacts chemically with acids and many other compounds and chemical elements to form calcium based compounds. Explosive when mixed with nitro organic compounds.**
Hazardous Decomposition Products		**Thermal decomposition at 540°C will produce calcium oxide and water.**
Hazardous Polymerization Products		**Will not occur.**

SECTION VI - TOXICOLOGICAL PROPERTIES

Route of Entry

☑ Skin Contact ☐ Skin Absorption ☑ Eye Contact ☑ Acute Inhalation ☐ Chronic Inhalation ☑ Ingestion

Effects of Acute Exposure to Product

Skin	**Severe irritation of mucous and skin, removes natural skin oils.**
Eyes	**Severe eye irritation, intense watering of the eyes, possible lesions, possible blindness when exposed for prolonged period. Eye irritation data: Eye-Rabbit-10mg/ 24 h – Severe.**
Inhalation	**If inhaled in form of dust, irritation of breathing passages, cough, sneezing.**
Ingestion	**If ingested: pain, vomiting blood, diarrhea, collapse, drop in blood pressure (indicates perforation of esophagus or stomach).**

Effects of Chronic Exposure to Product:

Contact dermatitis. Following repeated or prolonged contact, this product can cause redness, desquamation and fissures. This product may contain trace amounts of crystalline silica. Excessive inhalation of respirable crystalline silica dust may result in respiratory disease, including silicosis, pneumoconiosis and pulmonary fibrosis.

LD_{50} of Product (Specify Species and Route)	Irritancy of Product	Exposure limits of Product
7340 mg/kg (Rat, Oral) **7300 mg/kg (Mouse, Oral)**	**Severe to moist tissues**	**Unavailable**
LC_{50} of Product (Specify Species)	Sensitization to Product	Synergistic materials
Unavailable	**None**	**None reported**

SECTION VI - TOXICOLOGICAL PROPERTIES (Cont'd)

☑ Carcinogenicity ☐ Reproductive effects ☐ Tératogenicity ☐ Mutagenicity

Calcium Hydroxide is not listed as a carcinogen by ACGIH, MSHA, OSHA, NTP, DFG, RSST or IARC. It may, however, contain trace amounts of Crystalline Silica listed carcinogens by these organizations.

Crystalline Silica, which inhaled in the form of quartz or crystobalite from occupational sources, is classified by IARC as carcinogenic to humans. (Group 1)

Silica, crystalline (Airborne particles of respirable size) is regulated under California's Safe Drinking Water and Toxic Enforcement Act of 1986 (Proposition 65). Crystalline Silica is listed as a chemical known to the State to cause cancer.

NIOSH considers crystalline silica to be potential occupational carcinogen as defined by the OSHA carcinogen policy [29 CFR 1990]. (Ca).

NTP lists respirable Crystalline Silica as known to be human carcinogens based on sufficient evidence of carcinogenicity in humans. (K).

ACGIH lists respirable Crystalline Silica (quartz) as suspected human carcinogen. (A2).

DFG lists respirable Crystalline Silica as a substance that causes cancer in man (1)

RSST lists respirable Crystalline Silica (quartz) as suspected human carcinogen.

SECTION VII - PREVENTIVE MEASURES

Personal Protective Equipment (PPE)	**Wear clean, dry gloves, full length pants over boots, long sleeved shirt buttoned at the neck, head protection and approved eye protection selected for the working conditions.**
Gloves (Specify)	**Gauntlets Cuff style.**
Respiratory (Specify)	**Respirator Recommendations for Calcium Hydroxide: Not available.** **Respirator Recommendations for Calcium Oxide: NIOSH approved respirator.** **Up to 10 mg/m^3: (APF = 5) Any quarter-mask respirator.** **Up to 20 mg/m^3: (APF = 10) Any particulate respirator equipped with an N95, R95 or P95 filter except quarter-mask respirator. Any supplied-air respirator.** **Up to 25 mg/m^3: (APF = 25) Any supplied-air respirator operated in a continuous-flow mode. Any powered, air purifying respirator with a high-efficiency particulate filter.**
Eyes (Specify)	**ANSI, CSA or ASTM approved safety glasses with side shields. Tight fitting dust goggles should be worn when excessive (visible) dust conditions are present. Do not wear contact lenses without tight fitting goggles when handling this chemical.**
Footwear (Specify)	**Resistant to caustics.**
Clothing (Specify)	**Fully covering skin. Remove when wet or contaminated. Change daily.**
Other (Specify)	**Evaluate degree of exposure and use PPE if necessary. After handling lime, employees must shower. If exposed daily, use oil, Vaseline, silicone base crème etc. to protect exposed skin, particularly neck, face and wrists.**

Engineering Controls (e.g. ventilation, enclosed process, specify)

Enclose dust sources; use exhaust ventilation (dust collector) at handling points, keep levels below Max. Concentration Permitted.

SECTION VII - PREVENTIVE MEASURES (Cont'd)

Leak and Spill Procedure

Limit access to trained personnel. Use industrial vacuums for large spills. Ventilate area.

Waste Disposal

Transport to disposal area or bury. Review Federal, Provincial and local Environmental regulations.

Handling Procedures and Equipment

Avoid skin and eye contact. Minimize dust generation. Wear protective goggles and in cases of insufficient ventilation, use NIOSH approved dust respirator. An eye wash station and safety shower should be readily available where this material or its water dispersions are used. Contact lenses should not be worn when working with this chemical.

Storage Requirements

Keep tightly closed containers in a cool, dry and well-ventilated area, away from acids. Keep out of reach of children.

Special Shipment Information

Calcium Hydroxide is neither regulated by the Transportation of Dangerous Goods (TDG) Regulations (Canada) nor by the Hazardous Materials Regulations (USA).

SECTION VIII - FIRST AID MEASURES

Skin

Carefully and gently brush the contaminated body surfaces in order to remove all traces of lime. Use a brush, cloth or gloves. Remove all lime-contaminated clothing. Rinse contaminated area with lukewarm water for 15 to 20 minutes. Consult a physician if exposed area is large or if irritation persists.

Eyes

Immediately rinse contaminated eye(s) with gently running lukewarm water (saline solution is preferred) for 15 to 20 minutes. In the case of an embedded particle in the eye, or chemical burn, as assessed by first aid trained personnel, contact a physician.

Inhalation

Move source of dust or move victim to fresh air. Obtain medical attention immediately. If victim does not breathe, give artificial respiration.

Ingestion

If victim is conscious, give 300 ml (10 oz) of water, followed by diluted vinegar (1 part vinegar, 2 parts water) or fruit juice to neutralize the alkali. Do not induce vomiting. Contact a physician immediately.

General Advise

Consult a physician for all exposures except minor instances of inhalation.

SECTION IX - REGULATORY INFORMATION

Superfund Amendments and Reauthorization Act of 1986 (SARA Title III). / The Emergency Planning and "Community Right-to-Know" Act (EPCRA). / Comprehensive Environmental Response, Compensation and Liability Act (CERCLA). / Resource Conservation and Recovery Act (RCRA).

Component Calcium Hydroxide has been reviewed against the following regulatory listings:

- **SARA Section 302 – Emergency Planning Notification. Extremely Hazardous Substances (EHS) List and Threshold Planning Quantity (TPQ). (40 CFR, Part 355, Section 30) : Not listed.**
- **SARA Section 304 – Emergency Release Notification. Extremely Hazardous Substances (EHS) and Reportable Quantity (RQ) List. (40 CFR, Part 355, Section 40) : Not listed.**
- **SARA Section 311/312 – Hazard Categories (40 CFR, Part 370) : This product is regulated under CFR 1910.1200 (OSHA Hazard Communication) as Immediate (Acute) Health Hazards – Irritant.**
- **SARA Section 313 – Toxics Release Inventory (TRI). Toxic Chemical List (40 CFR, Part 372). Not listed.**
- **CERCLA – Hazardous Substance (40 CFR, Part 302): Not listed in Table 302.4.**
- **RCRA – Hazardous Waste Number (40 CFR, Part 261, Subpart D): Not listed.**
- **RCRA – Hazardous Waste Classification (40 CFR, Part 261, Subpart C): Not classified.**

CWA 311. - Clean Water Act List of Hazardous Substances.

Calcium Hydroxide has been withdrawn from the Clean Water Act (CWA) list of hazardous substances. (11/13/79) (44FR65400)

California Proposition 65.

Component Calcium Hydroxide does not appear on the above regulatory listing. This product may contain small amounts of crystalline silica. Silica, crystalline (Airborne particles of respirable size) is regulated under California's Safe Drinking Water and Toxic Enforcement Act of 1986 (Proposition 65). Crystalline silica is listed as a chemical known to the State to cause cancer.

Transportation - Hazardous Materials Regulations (USA) & Transportation of Dangerous Goods (TDG) Regulations (Can).

Calcium Hydroxide does not appear on the above regulatory listings

Toxic Substances Control Act (TSCA).

All naturally occurring components of this product are automatically included in the USEPA TSCA Inventory List per 40 CFR 710.4 (b). All other components are listed on the USEPA TSCA Chemical Substances Inventory. Calcium Hydroxide is subject to inventory update reporting (IUR).

Canadian Environmental Protection Act (CEPA) – Substances Lists (DSL/NDSL).

Calcium Hydroxide is specified on the public Portion of the Domestic Substances List (DSL).

ANSI/NSF 60 - Drinking Water Treatment Additives.

Hydrated Lime has been investigated with respect to elements identified by EPA as toxic and it has been classified for use in direct contact with drinking water (in accordance with Standard ANSI/NSF 60). For a list of classified products, refer to Underwriters Laboratories Inc.'s Online Certifications Directory.

FDA - U.S. Food and Drug Administration, Department of Health and Human Services.

Calcium Hydroxide has been determined as "Generally Recognized As Safe" (GRAS) by FDA. See 21CFR184.1205. (CFR Title 21 Part 184 - - Direct food substances affirmed as generally recognized as safe).

SECTION X - OTHER INFORMATION

Hazardous Materials Identification System (U.S.)

National Fire Protection Association (U.S.)
NFPA 704

WHMIS – Classification:	WHMIS – Classification:
"E" Corrosive Materials.	**"D2A" Materials causing other toxic effects.**
Symbol:	Symbol:

Additional Information/Comments:

The technical data contained herein is given as information only and is believed to be reliable. GRAYMONT makes no guarantee of results and assumes no obligation or liability in connection therewith.

Sources Used:

NFPA, NLA, TDG, CSST, RSST, (LSRO-FASEB), Hazardous Products Act, Environment Canada, Enviroguide, OSHA, ACGIH, IARC, NIOSH, CFR, NTP, HSDB, EPA SRS, RTECS, DFG, Chemistry and Technology of Lime and Limestone (John Wiley and Sons, Inc.), Lime and Limestone (WILEY-VCH).

SECTION XI - PREPARATION INFORMATION

Prepared by:	Telephone number:	Date :
GRAYMONT (QC) INC. **Quality Assurance & Technical Services**	**(450) 449-2262**	**May 2012**

An electronic version of this MSDS is available at: www.graymont.com under the PRODUCTS section.

AIR PRODUCTS

MATERIAL SAFETY DATA SHEET

SECTION 1. PRODUCT IDENTIFICATION

PRODUCT NAME: Ammonia
CHEMICAL NAME: Ammonia **FORMULA:** NH_3
SYNONYMS: Ammonia, Anhydrous

MANUFACTURER: Air Products and Chemicals, Inc.
7201 Hamilton Boulevard
Allentown, PA 18195-1501

PRODUCT INFORMATION: (800) 752-1597

MSDS NUMBER: 1003 **REVISION:** 7
REVIEW DATE: December 1999 **REVISION DATE:** December 1999

SECTION 2. COMPOSITION / INFORMATION ON INGREDIENTS

Ammonia is sold as pure product (>99%).

CAS NUMBER: 7664-41-7
EXPOSURE LIMITS:
OSHA: PEL = 50 ppm **ACGIH:** TLV/TWA = 25 ppm TLV-STEL = 35 ppm **NIOSH:** IDLH = 300 ppm

SECTION 3. HAZARD IDENTIFICATION

EMERGENCY OVERVIEW

Anhydrous Ammonia is an irritating, flammable, and colorless liquefied compressed gas packaged in cylinders under its own vapor pressure of 114 psig at 70 °F. Ammonia can cause severe eye, skin and respiratory tract burns. It poses an immediate fire and explosion hazard when concentrations exceed 15%; therefore, area must be ventilated before entering. Wear self-contained breathing apparatus (SCBA) when entering release area if concentrations exceed allowable exposure limits. Fully protective suits are required in large releases. Always be aware of fire and explosion potential in the case of large releases.

EMERGENCY TELEPHONE NUMBERS
(800) 523-9374 **Continental U.S., Canada, and Puerto Rico**
(610) 481-7711 **other locations**

ACUTE POTENTIAL HEALTH EFFECTS:

ROUTES OF EXPOSURE:

EYE CONTACT: Exposure to Ammonia can cause moderate to severe eye irritation.

INGESTION: Ingestion is not a likely route of exposure for Ammonia.

INHALATION: Ammonia is severely irritating to nose, throat, and lungs. Symptoms may include burning sensations, coughing, wheezing, shortness of breath, headache and nausea. Overexposure may also cause central nervous system effects including unconsciousness and convulsions. Upper airway damage is more likely and can result in bronchospasm (closing of the airway). Vocal chords are particularly vulnerable to corrosive effects of high concentrations. Lower airway damage may result in fluid build up and hemorrhage. Death has occurred following a 5 minute exposure to 5000 ppm.

SKIN CONTACT: Vapor contact may cause irritation and burns. Contact with liquid may cause freezing of the tissue accompanied by corrosive caustic action and dehydration.

POTENTIAL HEALTH EFFECTS OF REPEATED EXPOSURE:

ROUTE OF ENTRY: Inhalation, eye or skin contact

SYMPTOMS: Repeated or prolonged skin exposure may cause dermatitis.

TARGET ORGANS: Eyes, skin, central nervous and respiratory systems.
MEDICAL CONDITIONS AGGRAVATED BY OVEREXPOSURE: Conditions generally aggravated by exposure include asthma, chronic respiratory disease (e.g., emphysema), dermatitis and eye disease.
CARCINOGENICITY: Ammonia is not listed as a carcinogen or potential carcinogen by NTP, IARC, or OSHA.

SECTION 4. FIRST AID MEASURES

EYE CONTACT: Flush eyes with large quantities of water. Seek medical attention immediately.
INGESTION: Ingestion is not a likely route of exposure for Ammonia.
INHALATION: Remove person to fresh air. If not breathing, administer artificial respiration. If breathing is difficult, administer oxygen. Obtain prompt medical attention.
SKIN CONTACT: Flush affected area with large quantities of water. Remove contaminated clothing immediately. If liquid comes in contact with skin, remove contaminated clothing and flush with plenty of lukewarm water for several minutes. Seek medical attention immediately.
NOTE TO PHYSICIAN: Bronchospasm may be treated with the use of a bronchodialator such as albuterol and an anticholinergic inhalant such as Atrovent.

SECTION 5. FIRE FIGHTING MEASURES

FLASH POINT:	AUTOIGNITION:	FLAMMABLE RANGE:
Not applicable	1204 °F (651 °C)	16% - 25%

EXTINGUISHING MEDIA: Dry chemical, carbon dioxide or water.
SPECIAL FIRE FIGHTING INSTRUCTIONS: Evacuate all personnel from area. If possible without risk, stop the flow of Ammonia, then fight fire according to types of materials that are burning. Extinguish fire only if gas flow can be stopped. This will avoid possible accumulation and re-ignition of a flammable gas mixture. If possible, move adjacent cylinders away from fire area. Keep adjacent cylinders cool by spraying with large amounts of water until the fire burns itself out. Self-contained breathing apparatus (SCBA) may be required.

UNUSUAL FIRE AND EXPLOSION HAZARDS: Most cylinders are designed to vent contents when exposed to elevated temperatures. Pressure in a cylinder can build up due to heat and it may rupture if pressure relief devices should fail to function. Runoff from firefighting may be contaminated; check pH. Ammonia can form explosive compounds when combined with mercury.
HAZARDOUS COMBUSTION PRODUCTS: Oxides of nitrogen

SECTION 6. ACCIDENTAL RELEASE MEASURES

STEPS TO BE TAKEN IF MATERIAL IS RELEASED OR SPILLED: Evacuate immediate area. Eliminate any possible sources of ignition, and provide maximum explosion-proof ventilation. Shut off source of leak if possible. Isolate any leaking cylinder. If leak is from container, pressure relief device or its valve, contact your supplier. If the leak is in the user's system, close the cylinder valve, safely vent the pressure, and purge with an inert gas before attempting repairs. Ammonia vapors can be controlled with water spray, however; runoff may be contaminated. Releases that exceed 100 lbs (45.4 kgs) during a 24-hour period must be reported. (See Section 15).

All responders must be adequately protected from exposure. Levels of Ammonia should be below levels listed in Section 2 (Composition / Information on Ingredients) and the atmosphere must have at least 19.5% oxygen before personnel can be allowed in the area without self-contained breathing apparatus (SCBA).

SECTION 7. HANDLING AND STORAGE

STORAGE: Store cylinders in a well-ventilated, secure area, protected from the weather. Cylinders should be stored upright with valve outlet seals and valve protection caps in place. There should be no sources of ignition. All electrical equipment should be explosion-proof in the storage areas. Storage areas must meet National Electrical Codes for class 1 hazardous areas. Flammable storage areas should be separated from oxygen and other oxidizers by a minimum distance of 20 ft. or by a barrier of non-combustible material at least 5 ft. high having a fire resistance rating of at least ½ hour. Ammonia cylinders should not be stored near acids or acid-forming gases. Post "No Smoking or Open Flames" signs in the storage or use areas. Do not allow storage temperature to exceed 125 °F (52 °C). Storage should be away from heavily traveled areas and emergency exits. Full and empty cylinders should be segregated. Use a first-in first-out inventory system to prevent full containers from being stored for long periods of time.

Caution: Ammonia cylinders are subject to theft and misuse. Cylinders should be stored and used in controlled areas.

HANDLING: Do not drag, roll, slide or drop cylinder. Use a suitable hand truck designed for cylinder movement. Never attempt to lift a cylinder by its cap. Secure cylinders at all times while in use. Use a pressure reducing regulator or separate control valve to safely discharge gas from cylinder. Use a check valve to prevent reverse flow into cylinder. Never apply flame or localized heat directly to any part of the cylinder. Do not allow any part of the cylinder to exceed 125 °F (52 °C). Once cylinder has been connected to properly purged and inerted process, open cylinder valve slowly and carefully. If user experiences any difficulty operating cylinder valve, discontinue use and contact supplier. Never insert an object (e.g., wrench, screwdriver, etc.) into valve cap openings. Doing so may damage valve causing a leak to occur. Use an adjustable strap-wrench to remove over-tight or rusted caps. All piped systems and associated equipment must be grounded. Electrical equipment should be non-sparking or explosion-proof.

Only a recommended CGA connection should be used. Adapters should not be used. Use piping and equipment adequately designed to withstand pressures to be encountered. If liquid product is being used, ensure steps have been taken to prevent entrapment of liquid in closed systems. The use of pressure relief devices may be necessary. Dedicated inert gas cylinders with in line back-flow protection should be used for purging.

SPECIAL REQUIREMENTS: Always store and handle compressed gases in accordance with Compressed Gas Association, Inc. (ph.703-979-0900) pamphlet CGA P-1, *Safe Handling of Compressed Gases in Containers*. Local regulations may require specific equipment for storage or use.

SECTION 8. EXPOSURE CONTROLS/PERSONAL PROTECTION

ENGINEERING CONTROLS:

VENTILATION: Provide adequate natural or mechanical ventilation to maintain Ammonia concentrations below exposure limits.

RESPIRATORY PROTECTION:

Emergency Use: Self-contained breathing apparatus (SCBA) or positive pressure airline with full face mask with escape pack should be worn in areas of a large release or unknown concentration.

EYE PROTECTION: Safety glasses for handling cylinders. Chemical goggles with full faceshield for connecting, disconnecting or opening cylinders.

SKIN PROTECTION: Leather gloves for handling cylinders. Rubber or Neoprene gloves, and chemical resistant outergarment should be worn when connecting or disconnecting cylinders. Total encapsulating chemical suit may be necessary in large release area. Fire resistant suit and gloves in emergency situations.

OTHER PROTECTIVE EQUIPMENT: Safety shoes are recommended when handling cylinders. Safety shower and eyewash fountain should be readily available.

CAUTION: Contact with cold, evaporating liquid on gloves or clothing may cause cryogenic burns or frostbite. Cold temperatures may also cause embrittlement of PPE material resulting in breakage and exposure.

SECTION 9. PHYSICAL AND CHEMICAL PROPERTIES

APPEARANCE, ODOR AND STATE: Colorless gas with a sharp, strong odor similar to "smelling salts" which is readily detectable at 20 ppm
MOLECULAR WEIGHT: 17.0
BOILING POINT (1 atm): -28.1 °F (-33.4 °C)
SPECIFIC GRAVITY (air=1): 0.59
FREEZING POINT / MELTING POINT: -107.9 °F (-77.7 °C)
VAPOR PRESSURE (At 70 °F (21.1 °C)): 114.4 psig
GAS DENSITY (At 70 °F (21.1 °C) and 1 atm): 0.045 lb/ft^3
SOLUBILITY IN WATER (vol./vol. at 68 °F): 0.848

SECTION 10. STABILITY AND REACTIVITY

CHEMICAL STABILITY: Stable
CONDITIONS TO AVOID: High temperatures (greater than 800 °F (426 °C)). Cylinders should not be exposed to temperatures in excess of 125 °F (52 °C).
INCOMPATIBILITY (Materials to Avoid): Copper, silver, cadmium and zinc and their alloys; mercury, tin, acids, alcohols, aldehydes, halogens and oxidizers.
REACTIVITY:

A) **HAZARDOUS DECOMPOSITION PRODUCTS:** Hydrogen at high temperatures.
B) **HAZARDOUS POLYMERIZATION:** Will not occur

SECTION 11. TOXICOLOGICAL INFORMATION

LC_{50} (Inhalation): 7338 - 11590 ppm (rat, 1 hour); 2000 ppm (rat, 4 hours)
LD_{50} (Oral): Not applicable
LD_{50} (Dermal): Not applicable
SKIN CORROSIVITY: Ammonia is corrosive to the skin.
ADDITIONAL NOTES: Rats exposed continuously to 180 ppm Ammonia for 90 days did not show any abnormalities of organs or tissues. Mild nasal irritation was observed in 12 out of 49 rats exposed to 380 ppm Ammonia. At 655 ppm Ammonia, 32 out of 51 rats died by day 25 of exposure and 50 out of 51 rats had died after 65 days of exposure.

SECTION 12. ECOLOGICAL INFORMATION

AQUATIC TOXICITY: Currently, the following aquatic toxicity data are available for Ammonia:

Daphnia magna (48 hour) LC_{50} = 189 mg/l

Rainbow trout (24 hour) LC_{50} = 0.97 mg/l

Fathead minnow (96 hour) LC_{50} = 8.2 mg/l

MOBILITY: Not available
PERSISTENCE AND BIODEGRADABILITY: Not available
POTENTIAL TO BIOACCUMULATE: Not available
REMARKS: Do not release large amounts of Ammonia to the atmosphere. It does not contain any Class I or Class II ozone depleting chemicals.

SECTION 13. DISPOSAL CONSIDERATIONS

UNUSED PRODUCT / EMPTY CYLINDER: Return cylinder and unused product to supplier. Do not attempt to dispose of unused product.

DISPOSAL: Small amounts of Ammonia may be disposed of by discharge into water. A ratio of ten parts water to one part Ammonia should be sufficient for disposal. The subsequent solution of ammonium hydroxide can be neutralized and should be properly disposed of in accordance with regulations.

SECTION 14. TRANSPORT INFORMATION

DOT SHIPPING NAME: Ammonia, Anhydrous
HAZARD CLASS: 2.2
IDENTIFICATION NUMBER: UN1005
ADDITIONAL DESCRIPTION: Inhalation Hazard
SHIPPING LABEL(s): Nonflammable gas
PLACARD (When required): Nonflammable gas

ADDITIONAL MARKING: Ammonia is also a hazardous substance regulated by the EPA. When shipping quantities of 100 lbs. or more in one cylinder, add the prefix "RQ" to the DOT shipping name on the documentation and clearly mark "RQ" on the cylinder near the label.

SPECIAL SHIPPING INFORMATION: Cylinders should be transported in a secure upright position in a well-ventilated truck. Never transport in passenger compartment of a vehicle. Ensure cylinder valve is properly closed, valve outlet cap has been reinstalled, and valve protection cap is secured before shipping cylinder.

CAUTION: Compressed gas cylinders shall not be refilled except by qualified producers of compressed gases. Shipment of a compressed gas cylinder which has not been filled by the owner or with the owner's written consent is a violation of Federal law (49 CFR 173.301).

NORTH AMERICAN EMERGENCY RESPONSE GUIDEBOOK NUMBER (NAERG #): 125

SECTION 15. REGULATORY INFORMATION

U.S. FEDERAL REGULATIONS:

EPA - ENVIRONMENTAL PROTECTION AGENCY

CERCLA: Comprehensive Environmental Response, Compensation, and Liability Act of 1980 (40 CFR Parts 117 and 302)
Reportable Quantity (RQ): 100 lbs (45.4 kgs)

SARA TITLE III: Superfund Amendment and Reauthorization Act

SECTIONS 302/304: Emergency Planning and Notification (40 CFR Part 355)
Extremely Hazardous Substances: Ammonia is listed.
Threshold Planning Quantity (TPQ): 500 lbs (227 kgs)
Reportable Quantity (RQ): 100 lbs (45.4 kgs)

SECTIONS 311/312: Hazardous Chemical Reporting (40 CFR Part 370)

IMMEDIATE HEALTH:	Yes	PRESSURE:	Yes
DELAYED HEALTH:	No	REACTIVITY:	No
		FIRE:	No

SECTION 313: Toxic Chemical Release Reporting (40 CFR Part 372)
Ammonia is on the list of chemicals which may require reporting under Section 313.

CLEAN AIR ACT:

SECTION 112 (r): Risk Management Programs for Chemical Accidental Release (40 CFR PART 68)
Ammonia is listed as a regulated substance.
Threshold Quantity (TQ): 10,000 lbs (4535 kgs)

TSCA: Toxic Substance Control Act
Ammonia is listed on the TSCA inventory.

OSHA - OCCUPATIONAL SAFETY AND HEALTH ADMINISTRATION:

29 CFR Part 1910.119: Process Safety Management of Highly Hazardous Chemicals
Ammonia is listed as a highly hazardous chemical.
Threshold Quantity (TQ): 10,000 lbs (4535 kgs)

STATE REGULATIONS:

CALIFORNIA:
Accidental Release Prevention Program: Threshold Quantity (TQ): 100 lbs (45.4 kgs)
Proposition 65: This product is not a listed substance which the State of California requires warning under this statute.

NEW JERSEY:
Toxic Catastrophe Prevention Act: Registration Quantity (RQ): 5200 lbs (2358 kgs)

SECTION 16. OTHER INFORMATION

NFPA RATINGS:		HMIS RATINGS:	
HEALTH:	= 3	HEALTH:	= 3
FLAMMABILITY:	= 1*	FLAMMABILITY:	= 1
REACTIVITY:	= 0	REACTIVITY:	= 0
SPECIAL:			

* NFPA rates this gas a 1 as opposed to a 4 because it is "difficult to burn".

1 Identification of the substance/mixture and company/undertaking

1.1 Product identifier

ALPHA AMYLASE (SINGLE REAGENT)		
Product Name	AMY SINGLE 100	AMY 110
Catalog Number	BLT00006	XSYS0003
Reagent 1	5 x 20 ml	5 x 22 ml

1.2 Relevant identified uses of the substance or mixture and uses advised against

The sets are designed for Health Service laboratories for determination of α-amylase concentration in serum and plasma.The mixture is intended for professional use.

1.3 Details of the supplier of the safety data sheet

Name or trade name of manufacturer: Erba Lachema s.r.o.
Place of business: Brno, Karásek 1d, postcode 621 00
ID no.: 26918846
Phone: +420 517 077 579
Fax: +420 517 077 077
Qualified person: Ing. Pavel Filka
E-mail: filka@erbalachema.com
Phone: +420 517 077 556

1.4 Emergency telephone number

Erba Lachema s.r.o.
Phone: +420 517 077 556 *(service only during business hours)*
Toxicological Information Centre (TIS), Na Bojišti 1, 128 01 Prague 2
Phone: +420 224 919 293 or +420 224 915 402 *(service available 24 hours a day)*

2 Hazards Identification

2.1 Classification of the mixture

The kit **Alpha amylase is not classified** as dangerous according to EU Directives 1999/45/EC as amended

2.2 Label elements

None

3 Composition/information on ingredients

3.1 Composition

The reagent 1 contains the following hazardous substances:

Substance name	Content (% of weight)	CAS number	EC number	Classification according to (EC) No. 67/548 EEC Classification according to (EC) No. 1272/2008
Potassim thiocyanate	4.4	333-20-0	206-370-1	Xn; R 20/21/22-32-52/53; S 13-36/37-46-61 Acute Tox. 4, Aquatic Chronic 3; H302, H312, H332, H412; P273, P280
Sodium azide*	< 0.1	26628-22-8	247-852-1	T+; N; R 28-32-50/53; S 28-45-60-61 Acute Tox. 1, Aquatic Acute 1, Aquatic Chronic 1; H300, H400, H410; P273, P501, EUH032
Calcium chloride dIhydrate	< 1.8	10035-04-8	233-140-8	Xi; R36; S 22-24 Eye Irrit. 2; H319; P305+P351+P338

*) Substance with exposure limits (exposure limits are listed in Chapter 8.1)
For a full text of R-phrases and S-phrases see Section 16.

4 First aid measures

4.1 Description of first aid measures

When working with the mixture, take care of personal hygiene and prevent contamination of work clothing and skin. If you have any doubts or when symptoms persist, seek medical attention.

Exposure by inhalation

Discontinue the exposure, remove casualty to fresh air, keep at rest and seek medical advice.

Exposure by contact with skin

Take off all contaminated clothing. After contact with skin, wash immediately with soap and water.

Exposure by contact with eyes

Rinse an open eye (hold eyelids with fingers) with plenty of water for about 15 minutes, transfer casualty to a specialist.

Exposure by ingestion

Rinse mouth with water, drink 1/2 l of lukewarm water, seek medical attention immediately, do not induce vomiting.

4.2 Most important symptoms and effects, both acute and delayed

None

4.3 Indication of any immediate medical attention and special treatment needed

No data avealible

5 Fire-fighting measures

5.1 Extinguishing media

Suitable extinguishing media

The mixture is not flammable, the measure should be adapted to burning substances in the surrounding area.

Unsuitable extinguishing media

None known.

5.2 Special hazards arising from the substance or mixture

None

5.3 Advice for firefighters

Protective clothing, breathing apparatus.

6 Accidental release measures

6.1 Personal precautions, protective equipment and emergency procedures

Use personal protective equipment, see item 8. Observe the principles of work safety in chemical laboratories. Do not eat, drink or smoke.

6.2 Environmental precautions

Do not discharge into the drains, surface waters, groundwater.

6.3 Methods and material for containment and cleaning up

Absorb spilled agent with a suitable inert material (sand, earth, vapex) and store contaminated material in containers for collection of hazardous waste. For waste disposal see item 13.
Sweep solid reagent and store in containers for collection of hazardous waste. For waste disposal see item 13.

7 Handling and storage

7.1 Precautions for safe handling

Observe the principles of work in laboratory. Observe the normal operating procedures for handling chemical substances and mixtures. Do not eat, drink or smoke. Use personal protective equipment, see item 8.

7.2 Conditions for safe storage, including any incompatibilities

Store in tightly closed containers at a temperature between +2°C and +8°C.

7.3 Specific end use

The kit is designed for in vitro diagnostic devices.

8 Exposure controls/personal protection

8.1 Exposure limit values

Control parameters of the mixture components according to Government Decree No. 361/2007 Coll.

CAS	Substance name	PEL mg/m^3	NPK-P mg/m^3	Note	Conversion factor for ppm
26628-22-8	Sodium azide	0.1	0.3	D	0.376

*PEL - Permissible exposure limits; NPK-P - the maximum permissible concentration; D - a significant penetration of the substance through the skin or a strong irritating effect on the skin during exposure; S - the substance has a sensitizing effect; P - serious late effects of the substance cannot be excluded; * - the physico-chemical properties (e.g. explosiveness) are taken into account for NPK-P.*

Exposure limit values in the workplace according to Directive No. 2006/15/EC

CAS	Substance name	Limit values				Note
		8 hrs		Short time		
		mg/m^3	ppm	mg/m^3	ppm	

26628-22-8	Sodium azide	0.1	-	0.3	-	skin

The note "skin" attached to the exposure limit values in the workplace indicates the possibility of a serious penetration through the skin.

Limit values for indicators of biological exposure tests in urine for the product according to Decree No. 432/2003 Coll.
No data Available

8.2 Exposure controls

8.2.1 Appropriate engineering controls

None

8.2.2 Personal protective equipment

A) Respiratory protection: Not required with adequate ventilation, otherwise breathing apparatus.
B) Hand protection: Protective gloves - rubber, resistant to caustic substances.
C) Eye protection: Safety goggles.
D) Skin protection: Protective clothing:

8.2.3 Environmental exposure controls

To eliminate the emergency conditions, have pre-prepared a decontamination mixture and appropriate collection vessels for reaction residues. Dispose of reaction residues and decontaminated mixtures as hazardous waste water in accordance with relevant legal regulations.

9 Physical and chemical properties

9.1 Information on basic physical and chemical properties

Reagent 1

a. Appearance ..... Clear colorless liquide
b. Odour ..... no data available
c. Odour Threshold ..... no data available
d. pH (při 20°C) 6
e. Melting point / freezing point ..... no data available
f. Initial boiling point and boiling range (°C) ..... no data available
g. Flash point (°C) ..... no data available
h. Evaporation rate ..... no data available
i. Flammability (solid, gas) ..... no data available
j. Upper/lower flammability or explosive limits ..... no data available
k. Vapour pressure (hPa) ..... no data available
l. Vapour density ..... no data available
m. Relative density (kg.m-3) ..... no data available
n. Water solubility ..... no data available
o. Partition coefficient: n- octanol/water ..... no data available
p. Autoignition temperature (°C) ..... no data available
q. Decomposition temperature (°C) ..... no data available
r. Viscosity ..... no data available
s. Explosive properties ..... no data available
t. Oxidizing properties ..... no data available

10 Stability and reactivity

Under normal conditions of use and storage the mixture is stable.

10.1 Reactivity
No data available

10.2 Chemical stability
No data available

10.3 Possibility of hazardous reactions
No data available

10.4 Conditions to avoid
Avoid exposure to heat of solar radiation

10.5 Incompatible material
Heavy Metals, strong oxidizing agents and strong acids

10.6 Hazardous decomposition products
Nitrogen oxide and carbon

11 Toxicological information

11.1 Acute toxicity
Human oral LD_{50} ($g.kg^{-1}$)..... not applicable
Rat oral LD_{50} ($g.kg^{-1}$)..... not applicable
Rat inhalation LD_{50} ($g.kg^{-1}$)..... not applicable
Rat inhalation TLS ($g.kg^{-1}$)..... not applicable

11.2 Skin corrosion/irritation
Not applicable.

11.3 Serious eye damage/eye irritation
Not applicable.

11.4 Respiratory or skin sensitization
Not applicable.

11.5 Germ cell mutagenicity
Not applicable.

11.6 Carcinogenicity
Not applicable.

11.7 Reproductive toxicity
Not applicable.

11.8 Specific target organ toxicity - single exposure
Not applicable.

11.9 Specific target organ toxicity - repeated exposure
Not applicable.

11.10 Aspiration hazard
Not applicable.

12 Ecological information

12.1 Ecotoxicity
Waste water
LC_{50} 96 hrs, fish ($mg.kg^{-1}$) ..... not applicable
EC_{50} 48 hrs, daphnia ($mg.kg^{-1}$) ..... not applicable
IC_{50} 72 hrs algae ($mg.kg^{-1}$) ..... not applicable
CHSK ..... not applicable
BSK_5 ..... not applicable

12.2 Persistence and degradability
Not applicable.

12.3 Bioaccumulative potential
Not applicable.

12.4 Mobility in soil
Not applicable.

12.5 Results of PBT and vPvB assessment
Not applicable.

12.6 Other adverse effects
Not applicable.

13 Disposal considerations

13.1 Waste treatment methods
Dispose of in compliance with applicable regulations for hazardous waste management. Incinerate residues of the mixture in a hazardous waste incinerator.
Contaminated packaging must be treated as hazardous waste. Dispose of by incinerating in a hazardous waste incinerator.

14 Transport information
Not governed by regulations for transport of dangerous goods (ADR).

14.1 UN number
ADR/RID:
IMDG:
IATA:

14.2 UN proper shipping name
ADR/RID:
IMDG:
IATA:

14.3 Transport hazard class(es)ADR/RID:
IMDG:
IATA:

14.4 Packaging group
ADR/RID:
IMDG:

IATA:

14.5 Environmental hazards

ADR/RID:
IMDG:
IATA:

14.6 Special precautions for user

No data available

15 Regulatory Information

This safety data sheet complies with the requirements of Regulation (EC) No. 1907/2006.

15.1 Safety, health and environmental regulations/legislation specific for the substance or mixture

no data available

15.2 Chemical Safety

no data available

16 Further information

List of R-phrases

R 20/21/22 Harmful by inhalation, in contact with skin and if swallowed.
R 32 Contact with acids liberates very toxic gas.
R 52/53 Harmful to aquatic organisms, may cause long-term adverse effects in the aquatic environment.
R 28 Very toxic if swallowed.
R 32 Contact with acids liberates very toxic gas.
R 36 Irritating to eyes.
R 50/53 Very toxic to aquatic organisms, may cause long-term adverse effects in the aquatic environment.

List of H-phrases:

H302 Harmful if swallowed.
H312 Harmful in contact with skin.
H332 Harmful if inhaled.
H412 Harmful to aquatic life with long lasting effects.
H400 Very toxic to aquatic life.
H300 Fatal if swallowed.
H410 Very toxic to aquatic life with long lasting effects.
H319 Causes serious eye irritation.
EUH032 Contact with acids liberates very toxic gas.

List of P-phrases:

P273 Avoid release to the environment.
P280 Wear protective gloves/protective clothing/eye protection/face protection.
P501 Dispose of contents/ container to an approved waste disposal plant.
P305+P351+P338 IF IN EYES: Rinse cautiously with water for several minutes. Remove contact lenses, if present and easy to do. Continue rinsing.

List of S-phrases:

S 13 Keep away from food, drink and animal feeding stuffs.
S 36/37 Wear suitable protective clothing and gloves.

S 46 If swallowed, seek medical advice immediately and show this container or label.
S 61 Avoid release to the environment. Refer to special instructions/ Safety data sheets.
S 28 After contact with skin, wash immediately with plenty of soap and water.
S 45 In case of accident or if you feel unwell, seek medical advice immediately (show the label where possible).
S 60 This material and its container must be disposed of as hazardous waste.
S 22 Do not breathe dust.

Training instructions

Workers who come into contact with hazardous materials shall be acquainted by the organization, to a necessary extent, with the effects of these substances, with the methods how to treat them, with protective measures, the principles of first aid, necessary sanitation procedures and procedures for liquidation of failures and accidents. Under Article 35 of the European Parliament and Council Regulation (EC) No. 1907/2006, the employer must enable employees or their representatives access to information from the safety data sheet of the substance or mixture the worker uses or the effects of which can be exposed to during his/her work.

Recommended restrictions on use

The mixture is intended for professional use. It should not be used for purposes other than those listed under 1.2.

Further information

Information given is based on our best knowledge and is intended to describe the product for the purposes of safety of transporting and handling only. It should not be therefore construed as guaranteeing any specific property of the product. It is the responsibility of the user to observe all current regulations and consider recommendations on the use of application of product.

Declaration

The safety data sheet contains basic data corresponding to the present state of our knowledge and experience, in accordance with applicable regulations. The foregoing information was gathered with the utmost care, but that does not mean that it is complete and should be used as the only correct information. Erba Lachema s.r.o. is not responsible for any damages caused by improper use and handling of the mixture.

SAFETY DATA SHEET

SECTION 1 - SUBSTANCE IDENTITY AND COMPANY INFORMATION

Product Name: Various Microbial Cultures at Biosafety Level 1 or 2 or 3
ATCC Catalog #: Various

COMPANY INFORMATION: AMERICAN TYPE CULTURE COLLECTION
PO BOX 1549
MANASSAS, VA 20108
FOR INFORMATION CALL: 800-638-6597 or 703-365-2700
AFTER-HOURS CONTACT: 703-365-2710

CHEMTREC EMERGENCY: 800-424-9300 or 703-527-3887

SECTION 2 - HAZARDS IDENTIFICATION

GHS Symbol: NA
Signal Word: NA

HMIS Rating: Health: 0 Flammability: 0 Reactivity:0

NFPA Rating: Health: 0 Flammability:0 Reactivity:0

Routes of Exposure
Skin Contact: No information available.
Skin Absorption: No information available.
Eye Contact: No information available.
Inhalation: No information available.
Ingestion: May be harmful if swallowed.
Chronic: No Information Found

This substance is not hazardous as defined by OSHA 29CFR 1910.1200 however this product should be handled according to good lab practices, with proper personal protective equipment, proper engineering controls and within the parameters of the purchaser's safety program.

Health Hazards

ATCC recommends that all ATCC microbial cultures be handled by qualified microbiologists using appropriate safety procedures and precautions. Detailed discussions of laboratory safety procedures are provided in **Laboratory Safety: Principles and Practice** (Fleming et al) and in the U.S. Government Publication, **Biosafety in Microbiological and Biomedical Laboratories.** This publication is available in its entirety in the Center for Disease Control Office of Health and Safety's web site at http://www.cdc.gov/biosafety/publications/bmbl5/index.htm .
Information on the classification of human etiologic agents on the basis of hazard can be found as Appendix B in the NIH **Guidelines for Research Involving Recombinant DNA Molecules** at

ATCC® | THE ESSENTIALS OF LIFE SCIENCE RESEARCH GLOBALLY DELIVERED™

SAFETY DATA SHEET

http://grants.nih.gov/grants/policy/recombinentdnaguidelines.htm.

SECTION 3 - COMPOSITION/INFORMATION ON INGREDIENTS

Various Microbial Cultures at Biosafety Level 1 or 2 or 3

Either freeze dried, frozen or growing cells shipped in liquid cell culture medium (a mixture of components that may include, but is not limited to: inorganic salts, vitamins, amino acids, carbohydrates and other nutrients dissolved in water). Frozen Cultures may also contain a 5%-10% solution of Dimethyl sulfoxide as a cryoprotectant.

This substance contains no ingredients at concentrations to be considered hazardous as defined by OSHA 29CFR 1910.1200 however this product should be handled according to good lab practices, with proper personal protective equipment, proper engineering controls and within the parameters of the purchaser's chemical hygiene plan.

SECTION 4 - FIRST AID MEASURES

Ingestion: If person is unconscious seek emergency medical attention; never give anything by mouth to an unconscious person. If the person is conscious wash mouth out with copious amounts of water and call a physician then administer three cupfuls of water. Do not induce vomiting unless directed to do so by a physician.

Inhalation: If person is unconscious seek emergency medical attention, if person is conscious remove to fresh air and call a physician.

Dermal exposure: Immediately wash skin with copious amounts of water followed by washing with soap and copious amounts of water. Remove all contaminated clothing.

Eye exposures: Flush eyes with copious amounts of water for at least 15 minutes with eyelids separated and call a physician.

Notes to Physician: Treat symptomatically and supportively.

SECTION 5 - FIRE FIGHTING MEASURES

General: Wear Self-Contained breathing apparatus in pressure demand, MSHA/NIOSH approved. During a fire, irritating and toxic gases may be generated by thermal decomposition.

Extinguishing Media: Water spray, carbon dioxide, dry chemical powder, Halon (where regulations permit), or appropriate foam.

Autoignition Temperature: N/A

American Type Culture Collection (ATCC®)
P.O. Box 1549
Manassas, VA 20110 USA
www.atcc.org

(800) 638-6597 or 703-365-2700
Fax: 703-365-2750
Doc ID: 8409
Effective Date: 09/29/2014
Revision: 4

Explosion limits: N/A

Flash Point: Not Available

Specific Hazard(s): Responders should take into consideration the biohazard risk associated with responding to a fire in the area where the material may be stored or handled.

SECTION 6 - ACCIDENTAL RELEASE MEASURES

Use Personal Protective Equipment: Including Chemical Splash Goggles, Chemical Resistant Gloves, and appropriate clothing to prevent skin exposure. In addition, a Respiratory protection program that complies with OSHA 29 CFR 1910.134 and ANSI Z88.2 requirements or European Standard EN 149 must be followed whenever workplace conditions warrant respirator use.

Patient/Victim: Wash with soap and water. Work clothes should be laundered separately. Launder contaminated clothing before re-use. Do not take clothing home.

Equipment/Environment: Allow aerosols to settle; wearing protective clothing, gently cover spill with paper towel and apply 1% sodium hypochlorite, starting at perimeter and working towards the center; allow sufficient contact time before clean up (30 min).

Note: The use of additional PPE may be necessary for cleaning solutions.

SECTION 7 - HANDLING AND STORAGE

Handling: Handle and store according to instructions on product information sheet and label.

Storage: Keep in properly labeled containers.

SECTION 8 - EXPOSURE CONTROLS/PERSONAL PROTECTION

Engineering Controls: The use and storage of this material requires user to maintain and make available appropriate eyewash and safety shower facilities. Use fume hood or other appropriate ventilation method to keep airborne concentrations a low as possible.

Personal Protective Equipment: Including Safety Glasses or goggles, Chemical Resistant Gloves, and appropriate clothing to prevent skin exposure. In addition, a Respiratory protection program that complies with OSHA 29 CFR 1910.134 and ANSI Z88.2 requirements or European Standard EN 149 must be followed whenever workplace conditions warrant respirator use.

Exposure Limits: No exposure limits for this material have been established by ACGIH, NIOSH, or OSHA. There are no Vacated OSHA PEL for this material.

ATCC® | THE ESSENTIALS OF LIFE SCIENCE RESEARCH GLOBALLY DELIVERED™

SAFETY DATA SHEET

SECTION 9 - PHYSICAL AND CHEMICAL PROPERTIES

No Information is available for PH, Vapor Pressure, Vapor Density, Evaporation Rate, Viscosity, Boiling Point, Freezing/Melting Point, Decomposition Temperature, Solubility, Specific Gravity/Density, or Molecular Weight.

SECTION 10 - STABILITY AND REACTIVITY

Chemical Stability: No information available.

Conditions to Avoid: No information available.

Hazardous Decomposition Products: No information available.

Hazardous Polymerization: Will not occur.

SECTION 11 - TOXICOLOGICAL INFORMATION

No Information was found in relation to: RTECS, LD50/LC50, Carcinogenicity, Epidemiology, Teratogenicity, Reproductive effects, Mutagenicity, or Neurotoxicology.

Note: The toxicological properties of this substance have not been fully investigated.

SECTION 12 - ECOLOGICAL INFORMATION

No ecological information available.

SECTION 13 - DISPOSAL CONSIDERATIONS

Decontaminate all wastes before disposal (steam sterilization, chemical disinfection, and/or incineration).

Hazardous waste generators are required to determine if a discarded chemical is classified as a hazardous waste according to 40 CFR Part 261.3. In addition waste generators must consult about and comply with all state and local regulations to ensure compliance.

SECTION 14 - TRANSPORT INFORMATION

American Type Culture Collection (ATCC®)
P.O. Box 1549
Manassas, VA 20110 USA
www.atcc.org

(800) 638-6597 or 703-365-2700
Fax: 703-365-2750
Doc ID: 8409
Effective Date: 09/29/2014
Revision: 4

ATCC® | THE ESSENTIALS OF LIFE SCIENCE RESEARCH GLOBALLY DELIVERED™

SAFETY DATA SHEET

Land Transport (ADR/RID): Not a dangerous good in sense of this transport regulation.
Inland Water ways transport (ADN): Not a dangerous good in sense of this transport regulation.
Sea Transport (IMDG): Not a dangerous good in sense of this transport regulation.
Air Transport (ICAQ-TP / IATA-DGR): Not a dangerous good in sense of this transport regulation
DOT Classification: Not a DOT controlled material (United States)

SECTION 15 - REGULATORY INFORMATION

This substance is not listed on the TSCA Inventory. It is for research and development use only.
This substance is not SARA listed.

US Federal Regulations: SARA 313: This product is not regulated by SARA CAA, Section 112, Hazardous Air Pollutants (HAPs) (40 CFR 61): This product does not contain HAPs.

US State Regulations: California Proposition 65: This product does not contain chemicals listed under Proposition 65.

SECTION 16 - OTHER INFORMATION

THE INFORMATION PRESENTED IN THIS DOCUMENT IS BELIEVED TO BE CORRECT BASED UPON DATA AVAILABLE TO ATCC. USERS SHOULD MAKE AN INDEPENDENT DECISION REGARDING THE ACCURACY OF THIS INFORMATION BASED ON THEIR NEEDS AND DATA AVAILABLE TO THEM. ALL SUBSTANCES AND MIXTURES MAY PRESENT UNKNOWN HAZARDS AND ALL NECESSARY SAFETY PRECAUTIONS SHOULD BE TAKEN. ATCC ASSUMES NO LIABILITY RESULTING FROM USING OR COMING IN CONTACT WITH THIS SUBSTANCE.

© 2012 American Type Culture Collection.
ATCC® is a registered trademark of the American Type Culture Collection.

American Type Culture Collection (ATCC®)
P.O. Box 1549
Manassas, VA 20110 USA
www.atcc.org

(800) 638-6597 or 703-365-2700
Fax: 703-365-2750
Doc ID: 8409
Effective Date: 09/29/2014
Revision: 4

ATCC

Product Sheet

Clostridium acetobutylicum (ATCC® 824™)

Please read this FIRST

Storage Temp.
Frozen: -80°C or colder
Freeze-Dried: 2°C to 8°C
Live Culture: See Propagation Section

Biosafety Level
1

Intended Use

This product is intended for research use only. It is not intended for any animal or human therapeutic or diagnostic use.

Citation of Strain

If use of this culture results in a scientific publication, it should be cited in that manuscript in the following manner: *Clostridium acetobutylicum* (ATCC® 824™)

American Type Culture Collection
PO Box 1549
Manassas, VA 20108 USA
www.atcc.org

800.638.6597 or 703.365.2700
Fax: 703.365.2750
Email: Tech@atcc.org

Or contact your local distributor

Description

Designation: [CCRC 10639, CCUG 42182, DSM 792, IAM 19013, IFO 13948, JCM 1419, KCTC 1790, L.S. McClung 2291, LMG 5710, McCoy and McClung strain W, NCCB 29024, NCCB 84048, NCIMB 8652, VKM B-1787]
Deposited Name: *Granulobacter pectinovorum* (Stormer) Beijerinck
Product Description: Type strain. Degrades xylan, produces acetone, acidolysin, butyl alcohol [butanol], autobacteriocin, and restriction endonuclease Cac8241. Also used in the assay of p-aminobenzoic acid. Organism used in genome sequencing project.

Propagation

Medium
ATCC® Medium 2107: Modified Reinforced Clostridial Agar/Broth Medium (pre-reduced)
ATCC® Medium 260: Trypticase soy agar/broth with defibrinated sheep blood

Growth Conditions
Temperature: 37°C
Atmosphere: Anaerobic gas mixture, 80% N_2-10% CO_2-10% H_2

Propagation Procedure

1. Open vial according to enclosed instructions or visit www.atcc.org for instructions.
2. Under anaerobic conditions aseptically rehydrate the entire pellet with approximately 0.5 mL of #2107 broth. Aseptically transfer the entire contents to a 5-6 mL tube of #2107 broth. Additional test tubes can be inoculated by transferring 0.5 mL of the primary broth tube to these secondary broth tubes. Best practice dictates the use of pre-reduced media.
3. Use several drops of the primary broth tube to inoculate a #260 plate and/or #260 agar slant.
4. Incubate in an anaerobic atmosphere at 37°C for 24-48 hours. Incubate one agar plate aerobically at 37°C to check for contamination.

ANAEROBIC CONDITIONS:

- Anaerobic conditions for transfer may be obtained by the use of an anaerobic gas chamber or placement of test tubes under a gassing cannula system connected to anaerobic gas.

Anaerobic conditions for incubation may be obtained by any of the following:

- Loose screw caps on test tubes in an anaerobic chamber
- Loose screw caps on test tubes in an activated anaerobic gas pack jar
- Use of sterile butyl rubber stoppers on test tubes so that an anaerobic gas headspace is retained

Notes

Purified genomic DNA of this strain is available as ATCC® 824D-5™.
Additional information on this culture is available on the ATCC® web site at www.atcc.org.

References

References and other information relating to this product are available online at www.atcc.org.

Biosafety Level: 1

Appropriate safety procedures should always be used with this material. Laboratory safety is discussed in the current publication of the *Biosafety in Microbiological and Biomedical Laboratories* from the U.S. Department of Health and Human Services Centers for Disease Control and Prevention and National Institutes for Health.

ATCC Warranty

The viability of ATCC® products is warranted for 30 days from the date of shipment, and is valid only if the product is stored and cultured according to the information included on this product information sheet. ATCC lists the media formulation that has been found to be effective for this strain. While other, unspecified media may also produce satisfactory results, a change in media or the absence of an additive from the ATCC recommended media may affect recovery, growth and/or function of this strain. If an alternative medium

ATCC

Product Sheet

Clostridium acetobutylicum (ATCC® 824™)

Please read this FIRST

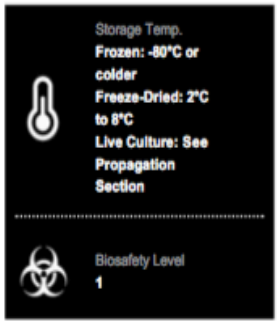

Intended Use

This product is intended for research use only. It is not intended for any animal or human therapeutic or diagnostic use.

Citation of Strain

If use of this culture results in a scientific publication, it should be cited in that manuscript in the following manner: *Clostridium acetobutylicum* (ATCC® 824™)

formulation is used, the ATCC warranty for viability is no longer valid.

Disclaimers

This product is intended for laboratory research purposes only. It is not intended for use in humans.

While ATCC uses reasonable efforts to include accurate and up-to-date information on this product sheet, ATCC makes no warranties or representations as to its accuracy. Citations from scientific literature and patents are provided for informational purposes only. ATCC does not warrant that such information has been confirmed to be accurate.

This product is sent with the condition that you are responsible for its safe storage, handling, and use. ATCC is not liable for any damages or injuries arising from receipt and/or use of this product. While reasonable effort is made to ensure authenticity and reliability of strains on deposit, ATCC is not liable for damages arising from the misidentification or misrepresentation of cultures.

Please see the enclosed Material Transfer Agreement (MTA) for further details regarding the use of this product. The MTA is also available on our Web site at www.atcc.org

Additional information on this culture is available on the ATCC web site at www.atcc.org.

© ATCC 2015. All rights reserved. ATCC is a registered trademark of the American Type Culture Collection. [11/02]

American Type Culture Collection
PO Box 1549
Manassas, VA 20108 USA
www.atcc.org

800.638.6597 or 703.365.2700
Fax: 703.365.2750
Email: Tech@atcc.org

Or contact your local distributor

SAFETY DATA SHEET

Version 5.1
Revision Date 08/01/2014
Print Date 04/10/2016

1. PRODUCT AND COMPANY IDENTIFICATION

1.1 Product identifiers

Product name : AC Broth

Product Number : 93207
Brand : Sigma-Aldrich

1.2 Relevant identified uses of the substance or mixture and uses advised against

Identified uses : Laboratory chemicals, Manufacture of substances

1.3 Details of the supplier of the safety data sheet

Company : Sigma-Aldrich
3050 Spruce Street
SAINT LOUIS MO 63103
USA

Telephone : +1 800-325-5832
Fax : +1 800-325-5052

1.4 Emergency telephone number

Emergency Phone # : (314) 776-6555

2. HAZARDS IDENTIFICATION

2.1 Classification of the substance or mixture

Not a hazardous substance or mixture.

2.2 GHS Label elements, including precautionary statements

Not a hazardous substance or mixture.

2.3 Hazards not otherwise classified (HNOC) or not covered by GHS - none

3. COMPOSITION/INFORMATION ON INGREDIENTS

3.2 Mixtures

No components need to be disclosed according to the applicable regulations.

4. FIRST AID MEASURES

4.1 Description of first aid measures

If inhaled
If breathed in, move person into fresh air. If not breathing, give artificial respiration.

In case of skin contact
Wash off with soap and plenty of water.

In case of eye contact
Flush eyes with water as a precaution.

If swallowed
Never give anything by mouth to an unconscious person. Rinse mouth with water.

4.2 Most important symptoms and effects, both acute and delayed
The most important known symptoms and effects are described in the labelling (see section 2.2) and/or in section 11

4.3 Indication of any immediate medical attention and special treatment needed
no data available

5. FIREFIGHTING MEASURES

5.1 Extinguishing media

Suitable extinguishing media
Use water spray, alcohol-resistant foam, dry chemical or carbon dioxide.

5.2 Special hazards arising from the substance or mixture
no data available

5.3 Advice for firefighters
Wear self contained breathing apparatus for fire fighting if necessary.

5.4 Further information
no data available

6. ACCIDENTAL RELEASE MEASURES

6.1 Personal precautions, protective equipment and emergency procedures
Avoid dust formation. Avoid breathing vapours, mist or gas.
For personal protection see section 8.

6.2 Environmental precautions
Do not let product enter drains.

6.3 Methods and materials for containment and cleaning up
Sweep up and shovel. Keep in suitable, closed containers for disposal.

6.4 Reference to other sections
For disposal see section 13.

7. HANDLING AND STORAGE

7.1 Precautions for safe handling
Provide appropriate exhaust ventilation at places where dust is formed.
For precautions see section 2.2.

7.2 Conditions for safe storage, including any incompatibilities
Keep container tightly closed in a dry and well-ventilated place.

Keep in a dry place.

7.3 Specific end use(s)
Apart from the uses mentioned in section 1.2 no other specific uses are stipulated

8. EXPOSURE CONTROLS/PERSONAL PROTECTION

8.1 Control parameters

Components with workplace control parameters
Contains no substances with occupational exposure limit values.

8.2 Exposure controls

Appropriate engineering controls
General industrial hygiene practice.

Personal protective equipment

Eye/face protection
Use equipment for eye protection tested and approved under appropriate government standards such as NIOSH (US) or EN 166(EU).

Skin protection
Handle with gloves. Gloves must be inspected prior to use. Use proper glove removal technique (without touching glove's outer surface) to avoid skin contact with this product. Dispose of contaminated gloves after use in accordance with applicable laws and good laboratory practices. Wash and dry hands.

Body Protection
Choose body protection in relation to its type, to the concentration and amount of dangerous substances, and to the specific work-place., The type of protective equipment must be selected according to the concentration and amount of the dangerous substance at the specific workplace.

Respiratory protection
Respiratory protection is not required. Where protection from nuisance levels of dusts are desired, use type N95 (US) or type P1 (EN 143) dust masks. Use respirators and components tested and approved under appropriate government standards such as NIOSH (US) or CEN (EU).

Control of environmental exposure
Do not let product enter drains.

9. PHYSICAL AND CHEMICAL PROPERTIES

9.1 Information on basic physical and chemical properties

a)	Appearance	Form: powder Colour: light yellow, brown
b)	Odour	no data available
c)	Odour Threshold	no data available
d)	pH	no data available
e)	Melting point/freezing point	no data available
f)	Initial boiling point and boiling range	no data available
g)	Flash point	no data available
h)	Evapouration rate	no data available
i)	Flammability (solid, gas)	no data available
j)	Upper/lower flammability or explosive limits	no data available
k)	Vapour pressure	no data available
l)	Vapour density	no data available
m)	Relative density	no data available
n)	Water solubility	no data available
o)	Partition coefficient: n-octanol/water	no data available
p)	Auto-ignition temperature	no data available
q)	Decomposition temperature	no data available
r)	Viscosity	no data available
s)	Explosive properties	no data available
t)	Oxidizing properties	no data available

9.2 Other safety information
no data available

10. STABILITY AND REACTIVITY

10.1 Reactivity
no data available

10.2 Chemical stability
Stable under recommended storage conditions.

10.3 Possibility of hazardous reactions
no data available

10.4 Conditions to avoid
no data available

10.5 Incompatible materials
no data available

10.6 Hazardous decomposition products
In the event of fire: see section 5

11. TOXICOLOGICAL INFORMATION

11.1 Information on toxicological effects

Acute toxicity
no data available

Inhalation: no data available

Dermal: no data available

no data available

Skin corrosion/irritation
no data available

Serious eye damage/eye irritation
no data available

Respiratory or skin sensitisation
no data available

Germ cell mutagenicity
no data available

Carcinogenicity

IARC:	No component of this product present at levels greater than or equal to 0.1% is identified as probable, possible or confirmed human carcinogen by IARC.
ACGIH:	No component of this product present at levels greater than or equal to 0.1% is identified as a carcinogen or potential carcinogen by ACGIH.
NTP:	No component of this product present at levels greater than or equal to 0.1% is identified as a known or anticipated carcinogen by NTP.
OSHA:	No component of this product present at levels greater than or equal to 0.1% is identified as a carcinogen or potential carcinogen by OSHA.

Reproductive toxicity
no data available
no data available

Specific target organ toxicity - single exposure
no data available

Specific target organ toxicity - repeated exposure
no data available

Aspiration hazard
no data available

Additional Information
RTECS: Not available

To the best of our knowledge, the chemical, physical, and toxicological properties have not been thoroughly investigated.

12. ECOLOGICAL INFORMATION

12.1 Toxicity
no data available

12.2 Persistence and degradability
no data available

12.3 Bioaccumulative potential
no data available

12.4 Mobility in soil
no data available

12.5 Results of PBT and vPvB assessment
PBT/vPvB assessment not available as chemical safety assessment not required/not conducted

12.6 Other adverse effects
no data available

13. DISPOSAL CONSIDERATIONS

13.1 Waste treatment methods

Product
Offer surplus and non-recyclable solutions to a licensed disposal company.

Contaminated packaging
Dispose of as unused product.

14. TRANSPORT INFORMATION

DOT (US)
Not dangerous goods

IMDG
Not dangerous goods

IATA
Not dangerous goods

15. REGULATORY INFORMATION

SARA 302 Components
SARA 302: No chemicals in this material are subject to the reporting requirements of SARA Title III, Section 302.

SARA 313 Components
SARA 313: This material does not contain any chemical components with known CAS numbers that exceed the threshold (De Minimis) reporting levels established by SARA Title III, Section 313.

SARA 311/312 Hazards
No SARA Hazards

Massachusetts Right To Know Components
No components are subject to the Massachusetts Right to Know Act.

Pennsylvania Right To Know Components

	CAS-No.	Revision Date
Proteose-peptone	-	
Dextrose agar	-	
Malt extract	8002-48-0	
Beef extract powder	68990-09-0	
Yeast extract	-	

New Jersey Right To Know Components

	CAS-No.	Revision Date
Proteose-peptone	-	
Dextrose agar	-	
Malt extract	8002-48-0	
Beef extract powder	68990-09-0	
Yeast extract	-	

California Prop. 65 Components
This product does not contain any chemicals known to State of California to cause cancer, birth defects, or any other reproductive harm.

16. OTHER INFORMATION

HMIS Rating

Health hazard:	0
Chronic Health Hazard:	
Flammability:	0
Physical Hazard	0

NFPA Rating

Health hazard:	0
Fire Hazard:	0
Reactivity Hazard:	0

Further information
Copyright 2014 Sigma-Aldrich Co. LLC. License granted to make unlimited paper copies for internal use only.
The above information is believed to be correct but does not purport to be all inclusive and shall be used only as a guide. The information in this document is based on the present state of our knowledge and is applicable to the product with regard to appropriate safety precautions. It does not represent any guarantee of the properties of the product. Sigma-Aldrich Corporation and its Affiliates shall not be held liable for any damage resulting from handling or from contact with the above product. See www.sigma-aldrich.com and/or the reverse side of invoice or packing slip for additional terms and conditions of sale.

Preparation Information
Sigma-Aldrich Corporation
Product Safety – Americas Region
1-800-521-8956

Version: 5.1 Revision Date: 08/01/2014 Print Date: 04/10/2016