Idaho National Engineering Laboratory

INEL-95/0355

September 1995

Process Modeling for the Integrated Thermal Treatment System (ITTS) Study

RECEIVED
JUN 09 1997
OSTI

K. H. Liebelt
B. W. Brown
W. J. Quapp

MASTER

LOCKHEED MARTIN

INEL-95/0355

Process Modeling for the Integrated Thermal Treatment System (ITTS) Study

K. H. Liebelt
B. W. Brown
W. J. Quapp

September 1995

Idaho National Engineering Laboratory
Lockheed Martin Idaho Technologies Company
Idaho Falls, ID 83415

MASTER

Prepared for the
U.S. Department of Energy
Idaho Operations Office
Under DOE Idaho Field Office
Contract No. DE-AC07-94ID13223

HH

DISTRIBUTION OF THIS DOCUMENT IS UNLIMITED

Process Modeling for the Integrated Thermal Treatment Systems (ITTS) Study

INEL-95/0335

Prepared by

Kenneth H Liebelt — 9/15/95

K. H. Liebelt, Advisory Engineer/Scientist — Date

Blaine W Brown — 9/15/95

B. W. Brown, Advisory Engineer/Scientist — Date

Approved by

W J Quapp — 9/15/95

W. J. Quapp, Project Manager/Consulting Engineer — Date
Materials and Processing

ABSTRACT

This report describes the process modeling done in support of the integrated thermal treatment system (ITTS) study, Phases 1 and 2. ITTS consists of an integrated systems engineering approach for uniform comparison of widely varying thermal treatment technologies proposed for treatment of the contact-handled mixed low-level wastes (MLLW) currently stored in the U. S. Department of Energy complex. In the overall study, 19 systems were evaluated. Preconceptual designs were developed that included all of the various subsystems necessary for a complete installation, from waste receiving through to primary and secondary stabilization and disposal of the processed wastes. Each system included the necessary auxiliary treatment subsystems so that all of the waste categories in the complex were fully processed. The objective of the modeling task was to perform mass and energy balances of the major material components in each system. Modeling of trace materials, such as pollutants and radioactive isotopes, were beyond the present scope. The modeling of the main and secondary thermal treatment, air pollution control, and metal melting subsystems was done using the ASPEN PLUS process simulation code, Version 9.1-3. These results were combined with calculations for the remainder of the subsystems to achieve the final results, which included offgas volumes, and mass and volume waste reduction ratios.

DISCLAIMER

Portions of this document may be illegible in electronic image products. Images are produced from the best available original document.

DISCLAIMER

This report was prepared as an account of work sponsored by an agency of the United States Government. Neither the United States Government nor any agency thereof, nor any of their employees, make any warranty, express or implied, or assumes any legal liability or responsibility for the accuracy, completeness, or usefulness of any information, apparatus, product, or process disclosed, or represents that its use would not infringe privately owned rights. Reference herein to any specific commercial product, process, or service by trade name, trademark, manufacturer, or otherwise does not necessarily constitute or imply its endorsement, recommendation, or favoring by the United States Government or any agency thereof. The views and opinions of authors expressed herein do not necessarily state or reflect those of the United States Government or any agency thereof.

CONTENTS

FIGURES

TABLES

SUMMARY

This report describes the process modeling done in support of the integrated thermal treatment system (ITTS) study, Phases 1 and 2. ITTS consists of an integrated systems engineering approach for uniform comparison of widely varying thermal treatment technologies proposed for the treatment of contact-handled mixed low-level waste (MLLW) currently stored in the U. S. Department of Energy complex. In the overall study, 19 systems were evaluated. Preconceptual designs were developed that included all of the various subsystems necessary for a complete installation, from waste receiving through to primary and secondary stabilization and disposal of the processed wastes. Each system included the necessary auxiliary treatment subsystems so that all of the waste categories in the complex were fully processed. The main thermal treatment options considered were rotary kiln incinerators, pyrolysis, plasma furnace, fixed-hearth thermal desorption, molten salt oxidation, molten metal waste destruction, steam gasification, Joule-heated vitrification, mediated electrochemical oxidation, and supercritical water oxidation.

The study required knowledge of these mass and energy flows in order to compare the advantages and disadvantages of the systems. The amounts and types of end products, and to a lesser effect the energy used, determine the cost of each system. The objective of the process modeling task was to perform mass and energy balances of the major material components in each system. Modeling of trace materials, such as pollutants and radioactive isotopes, and minor amounts of energy consumption, were beyond the present scope and were generally not tracked.

For Phase 2 of the study, the modeling of the main and secondary thermal treatment, main air pollution control, and metal melting subsystems was done using the ASPEN PLUS process simulation code, Version 9.1-3. This code performs steady-state solutions of engineering processes. Each model consisted of some 8 to 20 unit operations. Some steps in the processes could be modeled very simply since only major material components were being tracked. Feed rates were obtained from knowledge of the elemental composition of the waste, combined with the projected operating life of the facilities. The code was able to predict the products from each step in the process while simultaneously converging on the correct amount of fuel, oxidant, cooling water, and other parameters to meet the desired operating conditions.

The code results presented consist of the required amounts of process inputs (such as fuel, oxidant, and cooling water); energy inputs and outputs for each of the unit operations; the amounts and compositions of the intermediate streams and final products (such as offgas and processed wastes); and the mass and volume waste reduction ratios for each of the systems. These results were combined with updated Phase 1 calculations for the remainder of the subsystems to arrive at the overall system mass balances. The remaining subsystems included metal decontamination, lead recovery, mercury amalgamation, aqueous waste treatment, and special wastes.

The complete ITTS comparison process consisted of many other considerations besides the mass and energy balance results, including operational requirements, conceptual design layouts, planning life-cycle cost estimates, and identification of technologies requiring development, which are reported elsewhere.

ACKNOWLEDGMENTS

The authors acknowledge the leadership and guidance of Carl Cooley of the U. S. Department of Energy; and the support of Daryoush Bahar, Fred Feizollahi, Andrew Smith, Ben Teheranian, Julia Vetromile, and others of Morrison Knudsen Environmental Services.

ABBREVIATIONS AND ACRONYMS

APC	air pollution control
ASCII	American Standard Code for Information Interchange
atm	atmosphere
BDAT	best demonstrated available technology
Btu	British thermal unit
CEM	continuous emissions monitoring
CFR	Code of Federal Regulations
DOE	U.S. Department of Energy
EPA	U.S. Environmental Protection Agency
F&ORs	functional and operational requirements
FAD	functional allocation diagram
GOCO	government owned and contractor operated
HEPA	high-efficiency particulate air (filter)
hr	hour
INEL	Idaho National Engineering Laboratory
ITTS	integrated thermal treatment system
lb	pound
LLW	low-level (radioactive) waste
MEO	mediated electrochemical oxidation
MIT	Massachusetts Institute of Technology
MK	Morrison Knudsen Corporation, Engineering, Construction & Environmental Group
MLLW	mixed low-level (radioactive) waste
MPFD	model process flow diagram
MSO	molten salt oxidation
nCi	nanoCurie
NO	nitrous oxide
ORNL	Oak Ridge National Laboratory
PAN	passive/active neutron
PCB	polychlorinated biphenyls
PFD	process flow diagram
PLCC	planning life-cycle cost
RCRA	Resource Conservation and Recovery Act
RTR	real-time radiography
SCC	secondary combustion chamber
SCWO	supercritical water oxidation
SGS	segmented gamma scanning
SNR	sorting not required
SR	sorting required
TCLP	toxicity characteristic leaching procedure
TDS	total dissolved solids
TRU	transuranic
TSCA	Toxic Substances Control Act
VOCs	volatile organic compounds

Process Modeling for the Integrated Thermal Treatment System (ITTS) Study

1. INTRODUCTION

The U.S. Department of Energy's (DOE's) Environmental Management Office of Technology Development has commissioned an integrated thermal treatment system (ITTS) study to assess alternative systems for treating contact-handled mixed low-level radioactive waste (MLLW) and alpha-MLLW (10 ≤ nCi/g of TRU ≤ 100). The MLLW in the DOE complex consists of organic and inorganic solids and liquids comprising a wide variety of materials contaminated with radioactive substances. Treatment is needed that will destroy the organic material. Other operations are needed to stabilize the treatment residues, inorganic materials, and radionuclides prior to disposal in a MLLW disposal facility. Regulations promulgated by both DOE and the U.S. Environmental Protection Agency (EPA) govern the storage, treatment, and disposal of these wastes.

The purpose of the ITTS study is to conduct a systematic engineering evaluation of a variety of MLLW treatment system alternatives. Preconceptual designs, consisting of process flow diagrams (PFDs), facility layouts, equipment lists, and material mass balances, have been developed, and the relative merits and life-cycle costs for each treatment alternative identified. The study also identified the research and development, demonstrations, and testing and evaluation needed to assure performance of the unit operations in the most promising alternative systems.

Thermal treatment[b] is the most effective technique for destruction of toxic organic materials. Incineration,[c] a form of thermal treatment, has been designated by the EPA as the best demonstrated available technology (BDAT) for destroying a number of these organic waste constituents.

Phase 1 of the ITTS study focused on establishing a baseline understanding of well-developed thermal treatment technologies, namely a conventional rotary kiln incinerator with six variations, a fixed-hearth controlled-air incinerator, an indirectly-heated pyrolyzer, a thermal desorber for inorganic residue with a rotary kiln for the combustible waste fraction, and a plasma hearth melter system. The variations were used to examine the effects of combustion gas, air pollution control system design, and stabilization technology for the treatment residues on system performance and costs. Phase 2 addressed more innovative technologies such as one-step processing, gasification, low-temperature oxidation, molten salt oxidation, supercritical water oxidation, and molten metal destruction of wastes.

The systems evaluated were required to treat all waste stored in the DOE complex. This requirement established the need for several treatment lines within each system to accommodate the range

---

b. As defined by EPA in 40 CFR 260.10, p. 10, "Thermal treatment means the treatment of hazardous waste in a device which uses elevated temperature as the primary means to change the chemical, physical, or biological character or composition of the hazardous waste. Examples of thermal treatment processes are incineration, molten salt, pyrolysis, calcination, wet air oxidation, and microwave discharge."

c. As defined by EPA in 40 CFR 260.10, p. 10, "Incinerator means any enclosed device that (1) uses controlled flame combustion and neither meets the criteria for classification as a boiler, sludge dryer, or carbon regeneration unit, nor is listed as an industrial furnace, or (2) meets the definition of an infrared incinerator or plasma arc incinerator."

of MLLW encountered. Section 3 provides information on the specific composition of the wastes in the complex, and as used in the study and for modeling.

Portions of this report summarize material discussed in detail in the ITTS Phase 1 and Phase 2 reports[1,2]. Due to the large amount of information involved in describing the 19 systems involved in this study that descriptive material has not been reproduced here in its entirety. However, this report does contain a full description of the process modeling task. For that portion of the work done using the process simulation code, complete input files are included in the appendices to reproduce the numerical results presented.

2. TECHNICAL APPROACH

A key to accurate evaluation of the thermal treatment systems is using an integrated systems engineering approach that provides a uniform basis for comparing the merits of widely varying treatment alternatives. The systems considered in the study consist of all facilities, equipment, and methods needed for treating and disposing of the MLLW currently stored in the DOE complex. Steps within the treatment process include waste receiving, characterization, sizing, main thermal treatment, secondary treatments, air pollution control, primary and secondary stabilization of the waste residue, and eventual disposal. This approach more accurately evaluates systems such as plasma melters or electric arc furnaces that have a higher initial cost but produce less residue for disposal.

The focus of the ITTS study is on innovative and cost-effective treatment systems that minimize the short- and long-term adverse impacts on the worker and public environment, health, and safety. Two examples are the use of contaminated soil, when available, for vitrification of process residues and the use of CO_2 absorbent materials for absorption (or delayed release) of process offgas discharged to the atmosphere.

For Phase 1, various combinations of the incinerator subsystem, the air pollution control subsystem, and the waste stabilization subsystem were considered. Incinerator subsystems considered were rotary kiln, plasma arc furnace, fixed-hearth furnace, and fluidized bed incinerator. Air pollution control subsystem designs included both wet and dry technologies. Waste stabilization subsystem options included concrete, polymer, and glass- or vitrified soil-based final waste forms. A panel of engineers with diverse experience and technical backgrounds in incineration and stabilization was convened to reduce the number of possible choices to a number which could be evaluated in detail within the time and resources available. Ten systems were selected for the Phase 1 effort. A similar selection process was used for the more innovative technologies of Phase 2. The system types for both phases and the designations of them used in this study are listed in Table 2-1.

Since the public is often concerned with stack emissions, specific attention was focused on alternative air pollution control unit designs. The intent was to specify a configuration that would provide better emission performance (by an order of magnitude) than required to meet current EPA standards. Where research, development, demonstration, testing, and evaluation activities were expected to be necessary to verify component performance for this application, those costs were included.

A second major concern of the public is disposal of hazardous solid residues, especially when radioactive. Thermal treatment alone will not render the wastes nonhazardous; the residues will contain hazardous materials as defined by the Resource Conservation and Recovery Act (RCRA), as well as radionuclides. Under EPA regulations, residues might have to be stabilized before disposal if leachability standards are not met. To ensure RCRA compliance and to provide long-term isolation of residues, the baseline process chosen for primary residue stabilization was molten glass or soil-based stabilization, referred to as vitrification. If done correctly, vitrification provides the greatest protection

Table 2-1. Systems Included in the Integrated Thermal Treatment System Study.

System Description	Designation	
	Phase 1	Phase 2
Rotary kiln with air for combustion and dry/wet APC – baseline system	A-1	
Rotary kiln with oxygen for combustion and dry/wet APC	A-2	
Rotary kiln with air for combustion and wet APC	A-3	
Rotary kiln with oxygen for combustion and CO_2 retention	A-4	
Rotary kiln with air for combustion and polymer stabilization	A-5	
Rotary kiln with air for combustion and maximum recycling	A-6	
Slagging rotary kiln		A-7
Indirectly-heated pyrolyzer with oxygen and dry/wet APC	B-1	
Plasma hearth furnace with air and dry/wet APC	C-1	
Plasma furnace, CO_2 retention		C-2
Plasma gasification		C-3
Fixed-hearth furnace with oxygen and CO_2 retention	D-1	
Debris desorption and grouting with rotary kiln for oxidation of combustibles	E-1	
Molten salt oxidation		F-1
Molten metal waste destruction		G-1
Steam gasification		H-1
Joule-heated vitrification		J-1
Thermal desorption and mediated electrochemical oxidation		K-1
Thermal desorption and supercritical water oxidation		L-1

against future environmental releases following disposal and also provides a margin against more stringent future release standards. Vitrification binds the hazardous inorganic residues (glass or metal oxides) and the radioactive contaminants (also metal oxides) into a solid solution of rock-like material. DOE is currently supporting considerable research in the field of waste vitrification to improve the process engineering and understand the physical, chemical, and thermal treatment requirements to assure high performance. It is also expected that vitrification of residues may result in disposal cost savings and reduced public apprehension.

Variations in the stabilization process included polymers and cement. Some waste residues, such as salts resulting from the neutralization of acidic combustion gases and volatile incinerator fly ash, were stabilized in a second process using a polymer because they vaporize at vitrification temperatures, which can approach 3000 °F. Mercury is another material that cannot be vitrified because of its volatility. In this study, amalgamation was used for mercury since it is listed by the EPA as the BDAT.

As part of the design process, functional and operational requirements, flow sheets and mass balances, and conceptual equipment layouts were developed for each system. Mass balances were performed to account for all materials treated or used in the processes. All secondary residues were processed in accordance with regulatory requirements and the final volumes for disposal were estimated. Transportation and disposal cost estimates were applied to the disposal volume of each system as part of the planning level life-cycle cost (PLCC) estimate. Simplified system energy balances were conducted to

determine the requirements and thereby assure that no system was excessively energy intensive. Costs have been estimated assuming the system is government owned and contractor operated (GOCO).

Initial mass and energy balances were done for Phase 1 by simpler, less rigorous methods. For Phase 2, it was decided to model the systems with the ASPEN PLUS process simulation code[3]. Besides the of this code (and other similar codes) in having wide industrial acceptance, it provides numerous capabilities not only for the present task (macro-scale mass and energy balances), but also for addressing the inevitable 'what if' scenarios and other possible expanded analyses. These capabilities include (but are not limited to) a large material database, no restrictions on system configuration (multiple feedback loops), availability of all types of unit operation models, simultaneous convergence on the user's design specifications, sensitivity studies, cost predictions, plotting, and report generation. Switching to ASPEN PLUS required that the Phase 1 results be recalculated, but, as discussed in the following section, Phase 2 used an expanded waste database compared to Phase 1, which alone would have required a re-calculation of the Phase 1 results in order to compare all systems on an equal basis.

3. INPUT WASTE CHARACTERISTICS

Information on the composition of the entire contact-handled MLLW in the DOE complex was collected and summarized as part of the ITTS effort[4]. Certain waste streams, such as the Hanford tank waste and the Rocky Flats Plant solar pond liquids, were excluded from the ITTS database because these waste streams are being addressed using other processes that are more suitable than thermal treatment.

Initially, for the Phase 1 effort, a subset of the applicable DOE waste inventory was used. This consisted of the inventories at the ten largest sites, and amounted to about half of the total. For Phase 2 the database was expanded to that for the 20 largest sites, essentially 100% of the applicable waste, in order to better represent the likely (overall average) waste stream. While the smaller database in Phase 1 included all types of waste in the DOE complex, the relative proportions were not fully representative of that in the total inventory. Because the database was changed, even without a change in the method for calculating the mass and energy balances, it would have been necessary to recalculate the Phase 1 results in order to present a consistent comparison between all systems. Only the Phase 2 input waste characteristics (quantities, composition, and proposed ITTS feed rates) are discussed here. The following procedure applied to both phases, however.

First, the waste was characterized into 56 physical categories, such as, concrete, inorganic labpacks, paper, etc. The composition of each category was then defined in terms of 23 'elements'. The 'elements' consisted of chemical elements, chemical compounds (NO, SO_2, and water), general chemical categories (glass forming inerts and bulk metal), and the radioisotope U-238. The matrix of physical categories and 'elements' are shown in Table 3-1 (A through C), as derived from Reference (4).

Next, the physical categories were condensed into nine groups based on the waste treatment process (subsystem) to which the material would be sent.[2] For Phase 1, the treatment processes were designated A1, A2, and B through H as also shown in Table 3-1. Table 3-2 relates the treatment processes to the condensed physical categories. Later, for two of the Phase 2 systems, K-1 and L-1, treatment process A1 (combustible waste) was subdivided to separate the 'organic liquids' from the remainder, which is also shown in Table 3-2. The main thermal treatment process for each of the 19 systems was defined as that which processed the major organic portion of the combustible and noncombustible wastes.

Finally, these quantities of waste were converted to design feed rates for each process.[2] Design feed rates (nominal capacities) were based on a 20-year operations life, and adjusted for assumed plant availability, number of shifts per day, amount of secondary waste, and smallest available equipment.

Table 3-2 shows those feed rates used for the processes modeled with ASPEN PLUS, and for the other subsystem calculations as well.

For the ASPEN PLUS modeling, it was necessary to assign specific chemical compositions to the two general chemical categories, glass forming inerts and bulk metal, in order to take advantage of the material property data available in the code. However, precise definitions of the compositions were not necessary (and, in fact, were not known) since it was only necessary to model only a few of the many possible chemical reactions, for the present task. Given this, the physical properties of major interest were enthalpy and density, which do not vary greatly for reasonable selections. Thus, for the glass forming inerts it was assumed that the composition was a 50/50 mixture of Al_2O_3 and SiO_2, two of the most common constituents of glass; and, for the bulk metal the simple assumption was made that it consisted of 100% pure iron (Fe), the most common structural material. (Depending on the system under consideration and its known or expected operating characteristics, the iron was either assumed to be chemically inert or allowed to oxidize when chemically favored.)

Solid residues from the systems are stabilized by a combination of vitrification, polymer solidification, and grouting. Vitrification additives, if required, are introduced as part of the feedstock to the systems. Soil found at the INEL has been identified as a good additive material when mixed in approximately a 2-to-1 ratio with the ash from the thermal treatment processes (2 parts ash to 1 part soil), as discussed in Section 4.1 under primary stabilization. Even though contaminated soil from environmental restoration programs would likely be used as the additive, it is not considered as a waste for the purposes of this study.

The use of contaminated soil for the vitrification process provided extra value in those processes.

The composition of the soil was obtained from Reference (5). Only the eight most prevalent materials from the measured composition were used in the modeling. The "as used" formulation is found in the ASPEN PLUS stream summary results (for those systems which use soil) in Appendix C as the stream labeled 'SOIL'. Most notably, the composition includes 10% moisture and 12.8% calcium carbonate ($CaCO_3$), which decomposes at about 1500 °F (below vitrification temperatures). In the modeling, the flow rate of the moist, as-received feed soil is calculated (using an ASPEN PLUS design specification) to form the 2-to-1 mixture. After considering the loss of moisture and CO_2 (from the decomposition of $CaCO_3$)from the raw soil, the final ratio of ash-to-processed soil becomes 2.37-to-1.

Table 3-1A. Elemental Compositions in the Physical Waste Categories in the DOE Complex.

ITTS Phase 2 Matrix of Waste Physical Categories and Elemental Compositions in the DOE Complex	Treatment Process	Quantities (Kg)	Carbon	Hydrogen	Oxygen	Nitrogen	Sulfur	Chlorine	Fluorine	NO	SO2	Water	Glass Forming Inerts	Bulk Metal	Arsenic (As)	Barium (Ba)	Beryllium (Be)	Cadmium (Cd)	Chromium (Cr)	Lead (Pb)	Mercury (Hg)	Selenium (Se)	Silver (Ag)	Tantalum (Ta)	Uranium (U-238)
Total CH LLMW		156,292,790	20,373,727	3,192,878	7,259,401	63,671	63,835	3,870,540	6,296	37,279	47,075	24,624,652	59,846,783	20,967,456	9,094	98,749	753,726	244,823	422,110	10,773,124	1,190,330	4,545	4,548	23,100	2,415,249
Absorbed Inorganics	A2	1,688,639	0	0	0	0	0	0	0	0	0	422,160	1,182,047	0	3,377	1,689	0	25,330	33,773	8,443	8,443	1,689	1,689	0	0
Absorbed Organics	A1	870,705	109,240	10,509	0	0	0	141,462	0	0	0	0	609,494	0	0	0	0	0	0	0	0	0	0	0	0
Aqueous Cyanide	G	186,232	46	0	0	53	0	0	0	0	0	186,046	87	0	0	0	0	0	0	0	0	0	0	0	0
Aqueous Organics	B	888,611	9,609	876	0	0	0	7,287	0	0	0	870,838	0	0	0	0	0	0	0	0	0	0	0	0	0
Aqueous TC Metals	B	2,823,460	0	3,613	172,053	50,211	0	0	0	0	0	2,456,410	0	0	5,647	2,823	0	42,352	56,469	14,117	14,117	2,823	2,823	0	0
Asbestos	G	64,199	0	0	0	0	0	0	0	0	0	8,988	55,211	0	0	0	0	0	0	0	0	0	0	0	0
Asphalts	A2	28,494	2,396	425	0	0	28	0	0	0	0	0	25,645	0	0	0	0	0	0	0	0	0	0	0	0
Batteries (Pb, Cd)	G	115,818	1,101	277	2,933	0	1,469	0	0	0	0	4,625	0	913	0	0	0	231	12	104,056	0	0	0	0	0
Beryllium	G	2,091,824	0	0	1,338,098	0	0	0	0	0	0	0	0	0	0	0	753,726	0	0	0	0	0	0	0	0
Bulk (nontoxic) Metals	E	12,297,312	0	0	0	0	0	0	0	0	0	0	0	12,297,312	0	0	0	0	0	0	0	0	0	0	0
Bulk Barium	E	50,624	0	0	0	0	0	0	0	0	0	0	0	0	0	50,624	0	0	0	0	0	0	0	0	0
Bulk Cadmium	E	10,704	0	0	0	0	0	0	0	0	0	0	0	0	0	0	0	10,704	0	0	0	0	0	0	0
Bulk Mercury	D	1,167,608	0	0	0	0	0	0	0	0	0	0	0	0	0	0	0	0	0	0	1,167,608	0	0	0	0
Cardboard	A1	182,636	75,740	10,595	84,085	177	168	0	0	0	0	9,132	2,740	0	0	0	0	0	0	0	0	0	0	0	0
Cemented Inorganic Sludge	A2	9,837,218	0	0	0	0	0	0	0	0	0	737,791	9,025,649	0	0	0	0	24,593	49,186	0	0	0	0	0	0
Cemented Organic Sludge	A1	4,283,377	1,504,893	255,764	0	0	1,729	229,383	0	0	0	162,768	1,978,918	107,084	0	10,708	0	10,708	21,417	0	0	0	0	0	0
Cemented Resins	A2	2,580	519	61	63	0	0	0	0	0	0	743	1,192	0	0	0	0	1	1	0	0	0	0	0	0
Ceramics (molds & crucibles)	A2	16,873	0	0	0	0	0	0	0	0	0	0	16,873	0	0	0	0	0	0	0	0	0	0	0	0
Cloth	A1	751,268	311,553	43,581	345,882	727	693	0	0	0	0	37,563	11,269	0	0	0	0	0	0	0	0	0	0	0	0
Concrete	A2	639,913	0	0	0	0	0	0	0	0	0	48,633	591,279	0	0	0	0	0	0	0	0	0	0	0	0
Diatomaceous Earth	A2	262,959	0	0	0	0	0	0	0	0	0	39,443	223,511	0	0	0	0	0	0	0	0	0	0	0	0
Firebrick	A2	100,450	0	0	0	0	0	0	0	0	0	0	100,450	0	0	0	0	0	0	0	0	0	0	0	0
Flooring Materials	A2	12,343	5,808	950	2,257	12	48	0	0	0	0	259	3,309	0	0	0	0	0	0	0	0	0	0	0	0
Glass Raschig Rings	A2	105,354	0	0	0	0	0	0	0	0	0	0	105,354	0	0	0	0	0	0	0	0	0	0	0	0
Graphite	A2	13,897	13,897	0	0	0	0	0	0	0	0	0	0	0	0	0	0	0	0	0	0	0	0	0	0
Halide Salts	H	54,142	0	0	0	0	0	33,375	0	0	0	0	20,768	0	0	0	0	0	0	0	0	0	0	0	0
Halogenated Org. Liquids	A1	1,209,640	180,779	19,194	0	0	0	1,009,668	0	0	0	0	0	0	0	0	0	0	0	0	0	0	0	0	0
Incinerator Ash	A2	293,829	25,925	0	8,072	0	4,504	12,340	0	0	0	4,378	237,738	0	6	303	0	191	147	217	1	1	4	0	0
Inorganic Lebpacks	A2	80,059	845	177	1,689	493	0	0	0	0	0	4,804	70,452	0	64	32	0	480	640	180	160	32	32	0	0
Inorganic Sludge	A2	39,057,651	0	0	0	0	0	0	0	0	0	17,185,386	21,579,352	0	0	0	0	97,644	195,288	0	0	0	0	0	0
Lead Shielding	C	10,582,754	0	0	0	0	0	0	0	0	0	0	0	0	0	0	0	0	0	10,582,754	0	0	0	0	0
Leaded Rubber	C	64,997	1,811	228	0	0	41	0	0	0	0	0	520	0	0	0	0	0	0	62,397	0	0	0	0	0
Metal Fines & Turnings	E	162,122	0	0	0	0	0	0	0	0	0	0	0	162,122	0	0	0	0	0	0	0	0	0	0	0
Misc. Glass	A2	4,535,038	22,543	4,587	18,201	0	0	0	0	0	0	0	4,487,707	0	0	0	0	0	0	0	0	0	0	0	0
Nitrate Salts	A2	1,955	0	0	0	0	0	0	0	694	0	0	1,261	0	0	0	0	0	0	0	0	0	0	0	0
Non-halogenated Org. Liquids	A1	543,185	435,317	47,875	59,994	0	0	0	0	0	0	0	0	0	0	0	0	0	0	0	0	0	0	0	0
Oil	A1	1,107,505	913,888	143,908	0	0	5,429	0	0	0	0	33,225	11,075	0	0	0	0	0	0	0	0	0	0	0	0
Organic Lebpacks	A1	1,195,729	129,962	13,526	0	0	0	0	0	0	0	0	1,052,242	0	0	0	0	0	0	0	0	0	0	0	0
Organic Sludge	A1	6,514,048	4,183,471	711,001	0	0	4,805	637,664	0	0	0	325,702	195,421	325,702	0	32,570	0	32,570	65,140	0	0	0	0	0	0
Paint Residues	A2	97,959	3,911	561	304	122	0	0	0	0	0	8,816	83,265	0	0	0	0	0	0	980	0	0	0	0	0
Paper	A1	7,298,738	3,026,806	423,400	3,360,318	7,061	8,733	0	0	0	0	364,937	109,481	0	0	0	0	0	0	0	0	0	0	0	0
PE/PP	A1	1,272,378	1,065,137	192,151	0	0	0	0	0	0	0	0	5,090	0	0	0	0	0	0	0	0	0	0	0	0
Plastic N.O.S.	A1	6,630,491	4,851,365	788,740	0	1,780	1,629	900,782	0	0	0	33,152	53,044	0	0	0	0	0	0	0	0	0	0	0	0
PVC	A1	131,549	48,433	6,097	0	141	129	71,486	0	0	0	2,631	2,831	0	0	0	0	0	0	0	0	0	0	0	0
Resins	A2	35,740	14,375	1,700	1,741	0	0	0	0	0	0	17,870	0	0	0	0	0	18	36	0	0	0	0	0	0
Rubber	A1	254,154	177,640	22,364	0	0	3,319	0	0	0	0	0	50,831	0	0	0	0	0	0	0	0	0	0	0	0
Salts	A2	312,507	0	0	0	0	0	65,513	0	36,585	48,970	0	163,438	0	0	0	0	0	0	0	0	0	0	0	0
Sheetrock	A2	170,372	3,528	493	49,037	8	30,158	0	0	0	0	34,296	52,855	0	0	0	0	0	0	0	0	0	0	0	0
Soil/Dirt	A2	18,264,228	175,090	21,653	0	0	0	761,580	0	0	0	1,474,836	15,831,063	0	0	0	0	0	0	0	0	0	0	0	0
Sulfate Salts	H	229	0	0	0	0	0	0	0	0	104	0	125	0	0	0	0	0	0	0	0	0	0	0	0
Tantalum (INEL)	G	23,100	0	0	0	0	0	0	0	0	0	0	0	0	0	0	0	0	0	0	0	0	0	23,100	0
TFE	A1	8,453	1,990	167	0	0	0	0	6,296	0	0	0	0	0	0	0	0	0	0	0	0	0	0	0	0
Uranium Compounds	G	2,848,238	0	0	432,989	0	0	0	0	0	0	0	0	0	0	0	0	0	0	0	0	0	0	0	2,415,249
Wood	A1	318,799	132,207	18,494	146,774	308	294	0	0	0	0	15,940	4,782	0	0	0	0	0	0	0	0	0	0	0	0
Drums, 50/50 Split E,F	E,F	10,055,195	1,689,372	283,578	0	0	0	0	0	0	0	0	7,923	8,074,322	0	0	0	0	0	0	0	0	0	0	0
FRP Boxes	A1	4,677,120	1,234,549	176,632	1,234,912	2,579	2,459	0	0	0	0	133,298	1,892,690	0	0	0	0	0	0	0	0	0	0	0	0

Table 3-1B. Elemental Compositions in the Physical Waste Categories in the DOE Complex.

ITTS Phase 2 Matrix of Waste Physical Categories and Elemental Compositions in the DOE Complex	Treatment Process	Quantities (Kg)	Carbon	Hydrogen	Oxygen	Nitrogen	Sulfur	Chlorine	Fluorine	NO	SO2	Water	Glass Forming Inerts	Bulk Metal	Arsenic (As)	Barium (Ba)	Beryllium (Be)	Cadmium (Cd)	Chromium (Cr)	Lead (Pb)	Mercury (Hg)	Selenium (Se)	Silver (Ag)	Tantalum (Ta)	Uranium (U-238)
Total CH LLMW		158,292,790	20,373,727	3,192,876	7,259,401	63,671	63,835	3,870,540	6,296	37,279	47,075	24,624,652	59,846,783	20,967,456	9,094	98,749	753,726	244,823	422,110	10,773,124	1,190,330	4,545	4,548	23,100	2,415,249
Absorbed Inorganics	A2	1,688,639	0	0	0	0	0	0	0	0	0	422,160	1,182,047	0	3,377	1,689	0	25,330	33,773	8,443	8,443	1,689	1,689	0	0
Absorbed Organics	A1	870,705	109,240	10,509	0	0	0	141,462	0	0	0	0	609,494	0	0	0	0	0	0	0	0	0	0	0	0
Aqueous Cyanide	G	186,232	46	0	0	53	0	0	0	0	0	186,046	87	0	0	0	0	0	0	0	0	0	0	0	0
Aqueous Organics	B	888,615	9,609	876	0	0	0	7,287	0	0	0	870,838	0	0	0	0	0	0	0	0	0	0	0	0	0
Aqueous TC Metals	B	2,823,460	0	3,613	172,053	50,211	0	0	0	0	0	2,456,410	0	0	5,647	2,823	0	42,352	56,469	14,117	14,117	2,823	2,823	0	0
Asbestos	G	64,199	0	0	0	0	0	0	0	0	0	8,988	55,211	0	0	0	0	0	0	0	0	0	0	0	0
Asphalts	A2	28,494	2,396	425	0	0	28	0	0	0	0	0	25,645	0	0	0	0	0	0	0	0	0	0	0	0
Batteries (Pb, Cd)	G	115,618	1,101	277	2,933	0	1,489	0	0	0	0	4,625	0	913	0	0	0	231	12	104,056	0	0	0	0	0
Beryllium	G	2,091,924	0	0	1,338,096	0	0	0	0	0	0	0	0	0	0	0	753,726	0	0	0	0	0	0	0	0
Bulk (nontoxic) Metals	E	12,297,312	0	0	0	0	0	0	0	0	0	0	0	12,297,312	0	0	0	0	0	0	0	0	0	0	0
Bulk Barium	E	50,624	0	0	0	0	0	0	0	0	0	0	0	0	0	50,624	0	0	0	0	0	0	0	0	0
Bulk Cadmium	E	10,704	0	0	0	0	0	0	0	0	0	0	0	0	0	0	0	10,704	0	0	0	0	0	0	0
Bulk Mercury	D	1,167,608	0	0	0	0	0	0	0	0	0	0	0	0	0	0	0	0	0	0	1,167,608	0	0	0	0
Cardboard	A1	182,630	75,740	10,595	84,085	177	168	0	0	0	0	9,132	2,740	0	0	0	0	0	0	0	0	0	0	0	0
Cemented Inorganic Sludge	A2	9,837,210	0	0	0	0	0	0	0	0	0	737,791	9,025,649	0	0	0	0	24,593	49,186	0	0	0	0	0	0
Cemented Organic Sludge	A1	4,283,372	1,504,893	255,764	0	0	1,729	229,383	0	0	0	162,788	1,978,918	107,084	0	10,708	0	10,708	21,417	0	0	0	0	0	0
Cemented Resins	A2	2,580	519	81	63	0	0	0	0	0	0	743	1,192	0	0	0	0	1	1	0	0	0	0	0	0
Ceramics (molds & crucibles)	A2	16,873	0	0	0	0	0	0	0	0	0	0	16,873	0	0	0	0	0	0	0	0	0	0	0	0
Cloth	A1	751,268	311,553	43,581	345,882	727	693	0	0	0	0	37,563	11,269	0	0	0	0	0	0	0	0	0	0	0	0
Concrete	A2	839,913	0	0	0	0	0	0	0	0	0	48,633	591,279	0	0	0	0	0	0	0	0	0	0	0	0
Diatomaceous Earth	A2	262,955	0	0	0	0	0	0	0	0	0	39,443	223,511	0	0	0	0	0	0	0	0	0	0	0	0
Firebrick	A2	100,450	0	0	0	0	0	0	0	0	0	0	100,450	0	0	0	0	0	0	0	0	0	0	0	0
Flooring Materials	A2	12,343	5,808	650	2,257	12	48	0	0	0	0	259	3,309	0	0	0	0	0	0	0	0	0	0	0	0
Glass Raschig Rings	A2	105,354	0	0	0	0	0	0	0	0	0	0	105,354	0	0	0	0	0	0	0	0	0	0	0	0
Graphite	A2	13,897	13,897	0	0	0	0	0	0	0	0	0	0	0	0	0	0	0	0	0	0	0	0	0	0
Halide Salts	H	54,142	0	0	0	0	0	33,375	0	0	0	0	20,768	0	0	0	0	0	0	0	0	0	0	0	0
Halogenated Org. Liquids	A1	1,209,640	180,779	19,194	0	0	0	1,009,668	0	0	0	0	0	0	0	0	0	0	0	0	0	0	0	0	0
Incinerator Ash	A2	293,829	25,925	0	8,072	0	4,504	12,340	0	0	0	4,378	237,738	0	6	303	0	191	147	217	1	1	4	0	0
Inorganic Labpacks	A2	80,059	845	177	1,888	493	0	0	0	0	0	4,804	70,452	0	64	32	0	480	640	160	160	32	32	0	0
Inorganic Sludge	A2	39,057,651	0	0	0	0	0	0	0	0	0	17,185,366	21,579,352	0	0	0	0	97,644	195,288	0	0	0	0	0	0
Lead Shielding	C	10,582,754	0	0	0	0	0	0	0	0	0	0	0	0	0	0	0	0	0	10,582,754	0	0	0	0	0
Leaded Rubber	C	64,997	1,811	228	0	0	41	0	0	0	0	0	520	0	0	0	0	0	0	62,397	0	0	0	0	0
Metal Fines & Turnings	E	162,122	0	0	0	0	0	0	0	0	0	0	0	162,122	0	0	0	0	0	0	0	0	0	0	0
Misc. Glass	A2	4,533,038	22,543	4,587	18,201	0	0	0	0	0	0	0	4,487,707	0	0	0	0	0	0	0	0	0	0	0	0
Nitrate Salts	A2	1,955	0	0	0	0	0	0	0	694	0	0	1,261	0	0	0	0	0	0	0	0	0	0	0	0
Non-halogenated Org. Liquids	A1	543,185	435,317	47,875	59,994	0	0	0	0	0	0	0	0	0	0	0	0	0	0	0	0	0	0	0	0
Oil	A1	1,107,505	913,868	143,908	0	0	5,429	0	0	0	0	33,225	11,075	0	0	0	0	0	0	0	0	0	0	0	0
Organic Labpacks	A1	1,195,729	129,962	13,526	0	0	0	0	0	0	0	0	1,052,242	0	0	0	0	0	0	0	0	0	0	0	0
Organic Sludge	A1	6,514,048	4,183,471	711,001	0	0	4,805	637,664	0	0	0	325,702	195,421	325,702	0	32,570	0	32,570	65,140	0	0	0	0	0	0
Paint Residues	A2	97,959	3,911	561	304	122	0	0	0	0	0	8,816	83,265	0	0	0	0	0	0	980	0	0	0	0	0
Paper	A1	7,298,736	3,026,806	423,400	3,360,318	7,061	8,733	0	0	0	0	364,937	109,481	0	0	0	0	0	0	0	0	0	0	0	0
PE/PP	A1	1,272,378	1,085,137	182,151	0	0	0	0	0	0	0	0	5,090	0	0	0	0	0	0	0	0	0	0	0	0
Plastic N.O.S.	A1	6,630,491	4,851,365	788,740	0	1,780	1,629	900,782	0	0	0	33,152	53,044	0	0	0	0	0	0	0	0	0	0	0	0
PVC	A1	131,549	48,433	6,097	0	141	129	71,486	0	0	0	2,831	2,831	0	0	0	0	0	0	0	0	0	0	0	0
Resins	A2	35,740	14,375	1,700	1,741	0	0	0	0	0	0	17,870	0	0	0	0	0	18	36	0	0	0	0	0	0
Rubber	A1	254,154	177,640	22,364	0	0	3,319	0	0	0	0	0	50,831	0	0	0	0	0	0	0	0	0	0	0	0
Salts	A2	312,507	0	0	0	0	0	65,513	0	38,585	46,970	0	163,438	0	0	0	0	0	0	0	0	0	0	0	0
Sheetrock	A2	170,372	3,528	493	49,037	8	30,156	0	0	0	0	34,296	52,855	0	0	0	0	0	0	0	0	0	0	0	0
Soil/Dirt	A2	18,264,223	175,090	21,653	0	0	0	761,580	0	0	0	1,474,836	15,831,063	0	0	0	0	0	0	0	0	0	0	0	0
Sulfate Salts	H	229	0	0	0	0	0	0	0	0	104	0	125	0	0	0	0	0	0	0	0	0	0	0	0
Tantalum (INEL)	G	23,100	0	0	0	0	0	0	0	0	0	0	0	0	0	0	0	0	0	0	0	0	0	23,100	0
TFE	A1	8,453	1,990	187	0	0	0	0	6,296	0	0	0	0	0	0	0	0	0	0	0	0	0	0	0	0
Uranium Compounds	G	2,848,238	0	0	432,989	0	0	0	0	0	0	0	0	0	0	0	0	0	0	0	0	0	0	0	2,415,249
Wood	A1	318,799	132,207	18,494	146,774	308	294	0	0	0	0	15,940	4,782	0	0	0	0	0	0	0	0	0	0	0	0
Drums, 50/50 Split E,F	E,F	10,055,199	1,689,372	293,578	0	0	0	0	0	0	0	0	7,923	8,074,322	0	0	0	0	0	0	0	0	0	0	0
FRP Boxes	A1	4,877,120	1,234,549	176,632	1,234,912	2,579	2,459	0	0	0	0	133,298	1,892,690	0	0	0	0	0	0	0	0	0	0	0	0

Table 3-1C. Elemental Compositions in the Physical Waste Categories in the DOE Complex.

ITTS Phase 2 Matrix of Waste Physical Categories and Elemental Compositions in the DOE Complex	Treatment Process	Quantities (Kg)	Carbon	Hydrogen	Oxygen	Nitrogen	Sulfur	Chlorine	Fluorine	NO	SO2	Water	Glass Forming Inerts	Bulk Metal	Arsenic (As)	Barium (Ba)	Beryllium (Be)	Cadmium (Cd)	Chromium (Cr)	Lead (Pb)	Mercury (Hg)	Selenium (Se)	Silver (Ag)	Tantalum (Ta)	Uranium (U-238)
Total CH LLMW		156,292,790	20,373,727	3,192,876	7,259,401	63,671	63,635	3,870,540	6,296	37,279	47,075	24,624,652	59,846,783	20,967,456	9,094	98,749	753,726	244,823	422,110	10,773,124	1,190,330	4,545	4,548	23,100	2,415,249
Absorbed Inorganics	A2	1,688,639	0	0	0	0	0	0	0	0	0	422,160	1,182,047	0	3,377	1,689	0	25,330	33,773	8,443	8,443	1,689	1,689	0	0
Absorbed Organics	A1	870,705	109,240	10,509	0	0	0	141,462	0	0	0	0	609,494	0	0	0	0	0	0	0	0	0	0	0	0
Aqueous Cyanide	G	186,232	46	0	0	53	0	0	0	0	0	186,046	87	0	0	0	0	0	0	0	0	0	0	0	0
Aqueous Organics	B	888,611	9,609	876	0	0	0	7,287	0	0	0	870,838	0	0	0	0	0	0	0	0	0	0	0	0	0
Aqueous TC Metals	B	2,823,460	0	3,613	172,053	50,211	0	0	0	0	0	2,456,410	0	0	5,647	2,823	0	42,352	56,469	14,117	14,117	2,823	2,823	0	0
Asbestos	G	64,199	0	0	0	0	0	0	0	0	0	8,988	55,211	0	0	0	0	0	0	0	0	0	0	0	0
Asphalts	A2	28,494	2,396	425	0	0	28	0	0	0	0	0	25,645	0	0	0	0	0	0	0	0	0	0	0	0
Batteries (Pb, Cd)	G	115,818	1,101	277	2,933	0	1,469	0	0	0	0	4,625	0	913	0	0	0	231	12	104,056	0	0	0	0	0
Beryllium	G	2,091,824	0	0	1,338,096	0	0	0	0	0	0	0	0	0	0	0	753,726	0	0	0	0	0	0	0	0
Bulk (nontoxic) Metals	E	12,297,312	0	0	0	0	0	0	0	0	0	0	0	12,297,312	0	0	0	0	0	0	0	0	0	0	0
Bulk Barium	E	50,624	0	0	0	0	0	0	0	0	0	0	0	0	0	50,624	0	0	0	0	0	0	0	0	0
Bulk Cadmium	E	10,704	0	0	0	0	0	0	0	0	0	0	0	0	0	0	0	10,704	0	0	0	0	0	0	0
Bulk Mercury	D	1,167,608	0	0	0	0	0	0	0	0	0	0	0	0	0	0	0	0	0	0	1,167,608	0	0	0	0
Cardboard	A1	187,636	75,740	10,595	84,085	177	168	0	0	0	0	9,132	2,740	0	0	0	0	0	0	0	0	0	0	0	0
Cemented Inorganic Sludge	A2	9,837,218	0	0	0	0	0	0	0	0	0	737,791	9,025,649	0	0	0	0	24,593	49,186	0	0	0	0	0	0
Cemented Organic Sludge	A1	4,293,372	1,504,893	255,784	0	0	1,729	229,383	0	0	0	162,768	1,978,918	107,084	0	10,706	0	10,708	21,417	0	0	0	0	0	0
Cemented Resins	A2	2,580	519	81	63	0	0	0	0	0	0	743	1,192	0	0	0	0	1	1	0	0	0	0	0	0
Ceramics (molds & crucibles)	A2	16,873	0	0	0	0	0	0	0	0	0	0	16,873	0	0	0	0	0	0	0	0	0	0	0	0
Cloth	A1	751,268	311,353	43,581	345,882	727	693	0	0	0	0	37,563	11,269	0	0	0	0	0	0	0	0	0	0	0	0
Concrete	A2	639,915	0	0	0	0	0	0	0	0	0	48,633	591,279	0	0	0	0	0	0	0	0	0	0	0	0
Diatomaceous Earth	A2	262,955	0	0	0	0	0	0	0	0	0	39,445	223,511	0	0	0	0	0	0	0	0	0	0	0	0
Firebrick	A2	100,450	0	0	0	0	0	0	0	0	0	0	100,450	0	0	0	0	0	0	0	0	0	0	0	0
Flooring Materials	A2	12,343	5,808	650	2,257	12	48	0	0	0	0	259	3,309	0	0	0	0	0	0	0	0	0	0	0	0
Glass Raschig Rings	A2	105,354	0	0	0	0	0	0	0	0	0	0	105,354	0	0	0	0	0	0	0	0	0	0	0	0
Graphite	A2	13,897	13,897	0	0	0	0	0	0	0	0	0	0	0	0	0	0	0	0	0	0	0	0	0	0
Halide Salts	H	54,142	0	0	0	0	0	33,375	0	0	0	0	20,768	0	0	0	0	0	0	0	0	0	0	0	0
Halogenated Org. Liquids	A1	1,209,640	180,779	19,194	0	0	0	1,009,668	0	0	0	0	0	0	0	0	0	0	0	0	0	0	0	0	0
Incinerator Ash	A2	293,826	25,925	0	8,072	0	4,504	12,340	0	0	0	4,378	237,738	0	6	303	0	191	147	217	1	1	4	0	0
Inorganic Lebpacks	A2	80,059	845	177	1,688	493	0	0	0	0	0	4,804	70,452	0	64	32	0	480	640	160	160	32	32	0	0
Inorganic Sludge	A2	59,057,651	0	0	0	0	0	0	0	0	0	17,185,356	21,579,352	0	0	0	0	97,644	195,288	0	0	0	0	0	0
Lead Shielding	C	10,582,754	0	0	0	0	0	0	0	0	0	0	0	0	0	0	0	0	0	10,582,754	0	0	0	0	0
Leaded Rubber	C	64,997	1,811	228	0	0	41	0	0	0	0	0	520	0	0	0	0	0	0	62,397	0	0	0	0	0
Metal Fines & Turnings	E	162,122	0	0	0	0	0	0	0	0	0	0	0	162,122	0	0	0	0	0	0	0	0	0	0	0
Misc. Glass	A2	4,533,038	22,543	4,587	18,201	0	0	0	0	0	0	0	4,487,707	0	0	0	0	0	0	0	0	0	0	0	0
Nitrate Salts	A2	1,959	0	0	0	0	0	0	0	694	0	0	1,261	0	0	0	0	0	0	0	0	0	0	0	0
Non-halogenated Org. Liquids	A1	543,185	435,317	47,875	59,994	0	0	0	0	0	0	0	0	0	0	0	0	0	0	0	0	0	0	0	0
Oil	A1	1,107,505	913,868	143,908	0	0	5,429	0	0	0	0	33,725	11,075	0	0	0	0	0	0	0	0	0	0	0	0
Organic Lebpacks	A1	1,195,729	129,962	13,526	0	0	0	0	0	0	0	0	1,052,242	0	0	0	0	0	0	0	0	0	0	0	0
Organic Sludge	A1	6,514,048	4,183,471	711,001	0	0	4,805	637,664	0	0	0	325,702	195,421	325,702	0	32,570	0	32,570	65,140	0	0	0	0	0	0
Paint Residues	A2	97,959	3,911	561	304	122	0	0	0	0	0	8,816	83,265	0	0	0	0	0	0	980	0	0	0	0	0
Paper	A1	7,298,736	3,026,606	423,400	3,360,318	7,061	6,733	0	0	0	0	364,937	109,481	0	0	0	0	0	0	0	0	0	0	0	0
PE/PP	A1	1,272,378	1,085,137	182,151	0	0	0	0	0	0	0	0	5,090	0	0	0	0	0	0	0	0	0	0	0	0
Plastic N.O.S.	A1	8,630,491	4,851,365	788,740	0	1,780	1,829	900,782	0	0	0	33,152	53,044	0	0	0	0	0	0	0	0	0	0	0	0
PVC	A1	131,549	48,433	6,097	0	141	129	71,486	0	0	0	2,631	2,631	0	0	0	0	0	0	0	0	0	0	0	0
Resins	A2	35,740	14,375	1,700	1,741	0	0	0	0	0	0	17,870	0	0	0	0	0	18	36	0	0	0	0	0	0
Rubber	A1	254,154	177,640	22,364	0	0	3,319	0	0	0	0	0	50,831	0	0	0	0	0	0	0	0	0	0	0	0
Salts	A2	312,507	0	0	0	0	0	65,513	0	38,585	46,970	0	163,438	0	0	0	0	0	0	0	0	0	0	0	0
Sheetrock	A2	170,372	3,528	493	49,037	8	30,156	0	0	0	0	34,296	52,855	0	0	0	0	0	0	0	0	0	0	0	0
Soil/Dirt	A2	18,264,223	175,090	21,653	0	0	0	781,580	0	0	0	1,474,836	15,831,063	0	0	0	0	0	0	0	0	0	0	0	0
Sulfate Salts	H	229	0	0	0	0	0	0	0	0	104	0	125	0	0	0	0	0	0	0	0	0	0	0	0
Tantalum (INEL)	G	23,100	0	0	0	0	0	0	0	0	0	0	0	0	0	0	0	0	0	0	0	0	0	23,100	0
TFE	A1	8,453	1,990	187	0	0	0	0	6,296	0	0	0	0	0	0	0	0	0	0	0	0	0	0	0	0
Uranium Compounds	G	2,948,238	0	0	432,989	0	0	0	0	0	0	0	0	0	0	0	0	0	0	0	0	0	0	0	2,415,249
Wood	A1	318,799	132,207	18,494	148,774	308	294	0	0	0	0	15,940	4,782	0	0	0	0	0	0	0	0	0	0	0	0
Drums, 50/50 Split E,F	E,F	10,055,195	1,689,372	293,576	0	0	0	0	0	0	0	0	7,923	8,074,322	0	0	0	0	0	0	0	0	0	0	0
FRP Boxes	A1	4,677,120	1,234,549	176,632	1,234,912	2,579	2,459	0	0	0	0	133,298	1,892,690	0	0	0	0	0	0	0	0	0	0	0	0

Table 3-2. Waste Treatment Processes, and Waste Quantities and ITTS Flow Rates of Each.

Designator	Treatment Process/Waste Type	Quantity (kg)	Feed Rate (lb/hr)
A1	Combustible Waste Organic Liquids = 2,860,331 kg, 50.71 lb/hr Other = 34,389,440 kg, 609.71 lb/hr	37,249,771	660.4
A2	Noncombustible Waste	75,556,048	1339.6
B	Aqueous Waste (Systems K-1 and L-1)	3,712,071	80†
C	Lead Recovery	10,647,751	26†
D	Mercury Recovery	1,167,608	50†
E	Metal Melter (Metal w/ Entrained Contamination and 50% of Metal Drums)	17,548,360	149
F	Metal Decontamination (Metal Drums w/ Surface Contamination, 50% of Total)	5,027,598	468†
G	Special Wastes	5,329,211	153†
H	Polymer Stabilization(Halide and Sulfide Salts)	54,372	1†‡
TOTAL		156,292,790	2927

† Processes not presently modeled with process simulation code.
‡ The capacity for polymer stabilization depends on system requirements.

4. SYSTEM DESCRIPTIONS

This section briefly describes the 19 proposed thermal treatment systems. Each system design consists of all structures, buildings, and equipment needed to accomplish the functional and operational requirements (F&ORs), as fully described in References (1) and (2). Systems A-1 through A-7 are based on conventional rotary kiln technology. System B-1 uses an indirectly-heated, starved-air incinerator that operates in a pyrolysis mode. Systems C-1 through C-3 use a plasma-arc furnace. System D-1 is a fixed-hearth, controlled-air incinerator distinguished by the addition of a CO_2 retention system. System E-1 uses a rotary kiln for treatment of combustibles combined with an indirectly-heated rotary calciner used for the thermal desorption of debris. System F-1 uses molten salt oxidation (MSO). System G-1 involves molten metal waste destruction. System H-1 uses steam gasification. System J-1 uses Joule-heated vitrification. System K-1 involves thermal desorption and mediated electrochemical oxidation (MEO). System L-1 uses thermal desorption and supercritical water oxidation (SCWO).

System A-1 is the baseline system. For the sake of brevity, System A-1 is described more fully than the rest of the systems. The discussions of the other systems focus on their differences from the baseline system. Abbreviated descriptions of the treatment subsystems within each system are presented. The preconceptual design process flow diagrams (PFDs) for the main thermal treatment processes, Figures 4-1 through 4-19, are included for later comparison (Section 5) with the model process flow diagrams (MPFDs) created within ASPEN PLUS. (For convenience in reading the text, the figures for this section are located at the end of the section.)

4.1 System A-1: Conventional Rotary Kiln, Air Combustion Gas, Dry-Wet APC (Baseline System)

The majority of the technologies in this system use proven equipment that is commercially available. The system employs a rotary kiln incinerator using air as combustion gas. This is similar to treatment systems used by DOE at the TSCA incinerator at Oak Ridge National Laboratory (ORNL), Oak Ridge, Tennessee. The air pollution control (APC) subsystem is based on dry filtration followed by wet offgas scrubbing. The Scientific Ecology Group (SEG) incineration facility at Oak Ridge uses this general approach in its APC. Solid residues from the system are stabilized by a combination of vitrification and polymer solidification. System A-1 has twelve subsystems, which are described below.

Receiving and preparation. This subsystem has cranes and forklift trucks to unload waste containers from incoming vehicles. The physical state of the waste in containers is identified by a real-time radiography (RTR) unit. The wastes are classified either as sorting required (SR) waste or sorting not required (SNR) waste. A passive/active neutron (PAN) assay unit determines the level of TRU contamination of the waste. A segmented gamma scanning (SGS) unit is used to assay beta and gamma radioactivity. A computer software and bar code scanning unit records and tracks the waste. Containers of SNR waste are moved directly to the thermal treatment subsystem. If the container of SR waste has restricted items, it is passed through a sorting train. The container is decapped by a saw mounted on a gantry robot. After decapping, the container is emptied on a sorting table equipped with master-slave and hydraulic manipulators used for removing restricted materials, such as large pieces of metal and lead, and mercury containers. The segregated waste is sent to the appropriate treatment subsystems. For purposes of this study, approximately 50% of the waste was assumed to require sorting.

Main thermal treatment. This subsystem (incineration) receives combustible and noncombustible solids, sludges, and organic liquids. Some of the sludge from the aqueous waste treatment subsystem is also fed to the unit for drying and subsequent solidification with ash. Unless special precautions are taken, sludges have a tendency to form small surface-hardened balls during drying

that resist complete destruction of organic material. This tendency can be countered by introducing the sludge into the rotary kiln as small particles (<1/4 in. in diameter) or by introducing it with other wastes. The subsystem consists of a feed preparation shredder, a characterization unit, a natural gas and air-fired rotary kiln, a secondary combustion chamber (SCC), an air blower, and the associated combustion and feedstock preparation equipment. The size reduction unit shreds incoming waste in drums and boxes and feeds it to a series of transport bins and hoppers. Empty wooden boxes are also shredded, but empty metal containers are sent to the metal treatment subsystem. The contents of each hopper are sampled, characterized, and fed to the incinerator. Incineration takes place in a negative air pressure environment. The incinerator has a set of special graphite and steel seals designed to minimize air in-leakage. A metal housing around the incinerator unit provides secondary confinement.

Main thermal treatment APC. This subsystem has a dry gas filtration unit, a wet gas scrubbing unit, and a system for continuous emissions monitoring (CEM). In the dry gas filtration unit, the gas is partly quenched by water jets and filtered in either a baghouse or through high-temperature ceramic filters followed by high-efficiency particulate air (HEPA) filters. A charcoal or activated carbon filter is added in front of the HEPA filter to remove any trace quantities of mercury that might be present in the offgas. The wet offgas unit consists of a complete water quench, followed by hydrosonic and packed-bed scrubbers for removal of acid gas. A system to remove nitrogen oxides and dioxins is also included. The CEM unit monitors and records the quantities of CO, CO_2, O_2, particulates, and other compounds discharged from the stack, to check compliance with air discharge permits. A continuous radiation sampling device is also included at the stack discharge.

Lead recovery. This subsystem has a decontamination train and an electrically-heated roasting oven. The decontamination train has mechanical devices, including saws, shears, and sanders, to cut the lead waste and to remove metal cladding from lead. Decontamination of lead takes place in scarfing and abrasive blasting booths. The oven is used to melt lead that cannot be decontaminated by mechanical means. The furnace APC subsystem has dry gas filtration similar to that of the APC subsystem provided for the rotary kiln.

Mercury amalgamation. This subsystem uses a retort followed by a condenser to reclaim mercury from contaminated solids. After mercury removal, the solids are sent to the primary stabilization subsystem. Offgas from the mercury condenser is treated in a secondary combustion chamber and a wet-dry APC system similar to the incineration APC. Recovered elemental mercury is either recycled or amalgamated with zinc or copper in an amalgamation reactor.

Metal decontamination. This subsystem has a decontamination train. The decontamination train has size reduction tools (plasma torch, saw, and shear) and is provided with abrasive liquid blasting booths designed to remove entrained and surface contamination. It is assumed that dry ice blasting is used to reduce the quantity of liquid waste generated.

Metal melting. This subsystem includes a size reduction unit operation. Metals that cannot be decontaminated by mechanical means (surface blasting, grinding, etc.) are sent to this subsystem. In the induction melter, most radioactive material goes into the molten slag, which is cast in a container, cooled, and sent for inspection, assay, and shipment to storage or disposal facilities. Clean molten metal is poured into an ingot, cooled, and sent for recycling. The induction melter APC subsystem has a train for dry gas filtration similar to the APC subsystem provided for the thermal treatment unit.

Special waste treatment. It is assumed that there will be special wastes that require capabilities not included in the basic system. The treatment subsystem for special waste is located in a room equipped with a crane and all utilities needed for installing treatment systems for special wastes.

Special treatment systems will be identified and provided on a case-by-case basis during facility operation. An equipment cost allowance of $3 million is included in the cost estimates.

Aqueous waste treatment. This subsystem collects and treats input aqueous waste, which could include waste water having corrosive properties or contaminated with dissolved solids, suspended solids, organic compounds, or heavy metals. In addition, this subsystem treats the system's secondary aqueous wastes, such as the slurry from the APC subsystem scrubber blowdown, sludge from abrasive blasting in the metal decontamination subsystem, rinse water from container washdown, and water from equipment and floor drains.

The incoming aqueous waste is classified as having high levels of total organic carbon (TOC), high levels of total dissolved solids (TDS), or low levels of TDS, and then stored in the appropriate batch tank. The primary treatment train for high-TOC waste involves removing gross organics (using flotation thickeners or coalescers), filtering out suspended solids (using back flushable filters), removing dissolved organics (using carbon filtration or ozonators), and removing and polishing dissolved solids (using ion exchange). An alternative for treating high-TOC waste is to feed it to the thermal treatment subsystem. For liquids with high levels of TDS, the treatment train involves neutralization, filtering out suspended solids, and removing dissolved solids, probably by evaporation. For liquids with low levels of TDS, the primary treatment train consists of filtering out suspended solids, removing dissolved organics (using carbon filter or ozonators), and removing dissolved solids (by ion exchange).

Liquid wastes with mercury contamination are treated by precipitation and filtration using sulfur-impregnated carbon filters. Also, the ion exchange vessels will have mercury-selective resins to capture mercury.

In addition to the primary treatment trains, each waste type can be routed to or bypass a given treatment unit. The aqueous waste treatment subsystem concentrates all sludge waste produced by the various treatment trains and sends it to the stabilization subsystem. Spent ion exchange resin from treatment processes is dewatered and sent to the thermal treatment subsystem or to the stabilization subsystem.

Primary stabilization. This subsystem uses vitrification to convert the incinerator ash to a waste form suitable for disposal. In vitrification, soil (including contaminated soil from a DOE installation) or chemical additives (SiO_2, Al_2O_3, Fe_2O_3, etc.) are metered into the rotary kiln to act as glass formers. The additives are added in quantities proportional to the weight of expected bottom ash. In order to add the proper quantity, the input waste must be characterized well enough to predict the quantity of ash. The kiln mixes the soil with the ash and discharges the mixture into a storage hopper. The mixture is metered from the hopper into a melter furnace. The melter furnace vitrifies the ash and soil mixture and discharges the molten mixture into a container. The container is cooled, capped, and sent to a swiping and decontamination station. If surface contamination is found, the container is washed by high-pressure water jets. The inspected container is sent for assay, certification, and shipping to storage or disposal facilities. The melter furnace APC unit has a dry gas filtration train similar to the dry APC subsystem provided for the rotary kiln.

Research conducted at Idaho National Engineering Laboratory (INEL) has shown that the residue after combustion, when combined with about 40 to 50% soil, will form a good glass or ceramic waste form. Testing on bench-scale melters at INEL has shown that drying the soil before placing it in a melter results in less violent melter startup. Thus, the soil is introduced into the incinerator and dried. As an additional benefit, any organic carbon will be eliminated and carbonates will be disassociated.

Secondary stabilization. This subsystem receives treated residues that are not suitable for processing by the primary stabilization subsystem, such as salts having a low melting point or fly ash with a salt concentration exceeding the limits specified for vitrification when it is the primary stabilization method. Stabilization of salts involves polymer encapsulation using sulfur cement, polyethylene, or polymerizing agents produced by Dow Chemical Company. The subsystem has a dryer that removes water from the incoming waste. The dried powder and polymer are metered into an extruder that heats and mixes the polymer with powdered waste. The extruder feeds the mixture into a drum. When filling is complete, the drum is capped and sent to a swiping and decontamination station. If surface contamination is detected, the container is washed by high-pressure water jets or blasts of dry ice. The inspected container is sent for assay, certification, and shipping to storage or disposal facilities. Bulk secondary waste, such as spent filters, is compacted and macro-encapsulated by grouting techniques.

Certify and ship. This subsystem characterizes the physical and radiological properties of the packaged waste to allow certification in accordance with transportation, storage, and disposal requirements. The containers of packaged waste for shipment are weighed. An RTR unit examines the container to ensure that the matrix is homogeneous and has no free water. If TRU or alpha contaminated waste is processed, the TRU concentration is measured by a PAN assay unit. An SGS unit is used to assay the beta and gamma radioactivity. After inspection, the waste is either sent to a temporary storage area or loaded onto a truck for offsite or onsite shipment.

4.2 System A-2: Conventional Rotary Kiln, Oxygen Combustion Gas

System A-2 is the same as System A-1 except that the incinerator is equipped to use commercially pure oxygen as the combustion gas. The APC subsystem has a smaller capacity, since oxygen combustion creates lower volumes and velocities of incineration offgas than does air combustion.

4.3 System A-3: Conventional Rotary Kiln, Wet Air Pollution Control Subsystem

System A-3 is the same as System A-1 except that the APC subsystem uses all wet filtration and cleaning techniques. The dry gas filtration unit (baghouse) is eliminated.

4.4 System A-4: Conventional Rotary Kiln, CO_2 Retention

System A-4 is basically the same as System A-1 except that the incinerator uses oxygen as the combustion gas, and a different APC configuration is used. This APC subsystem treats offgas by the conventional dry filtration means and then removes carbon dioxide by absorption into lime in a fluidized bed. The water formed in the incinerator is condensed and sent to the aqueous waste treatment subsystem. The remaining gas is enriched with oxygen and rerouted to the incinerator for additional treatment of toxic materials. The CO_2 retention concept is being developed at the Argonne National Laboratory. The lime (or dolomite) is recycled as many as ten times using a lime recovery system whose main component is a calciner. During recovery the calcium carbonate is reheated to release the CO_2. The CO_2 is then monitored and discharged to the atmosphere. Alternatively, the calcium carbonate can be calcined at a remote place, in which case the only offgas released to the atmosphere on a continuous basis close to the thermal treatment equipment is the inert gas that enters with the oxygen or leaks into the system. The $CaCO_3$ could also be disposed as a solid, which would incur additional disposal costs. Compressed gas storage tanks are included for these gases.

System A-4's receiving and preparation subsystem is different from System A-1's in that bulk metals, slag, and tar formers need to be removed as part of that step. The capacity of System A-4's aqueous waste treatment subsystem is slightly larger than that of the baseline system in order to handle the water condensed from the offgas.

4.5 System A-5: Conventional Rotary Kiln, Polymer Stabilization

System A-5 is the same as System A-1 except that the primary stabilization method uses polymers in place of vitrification. In this case, all solid residues are stabilized by polymers as described in Section 4.1, secondary stabilization. However, bottom ash and fly ash stabilized residues are kept separate for purposes of tracking transuranic activity.

4.6 System A-6: Conventional Rotary Kiln, Maximum Recycling

System A-6 is designed to minimize the volume of waste requiring disposal. The standard rotary kiln, which uses air as the combustion gas, is preceded by a feedstock preparation subsystem that maximizes decontamination to permit recycling of waste materials, containers, bulk metals, and process chemicals. Containers and some bulk metals are recovered, decontaminated, and recycled within the facility to the extent possible. Aqueous secondary waste streams, except for acid gas scrubber blowdown, are treated in an aqueous waste treatment subsystem. The blowdown from the acid gas scrubber is processed through a salt splitting system to produce a caustic and hydrochloric acid. The caustic can be recycled to the beginning of the wet section of the APC subsystem. Salt splitting is a specially-designed electrodialysis process that results in caustic being regenerated for reuse within the system. Activated carbon filters in the offgas line are recycled using a retorting process, which removes the mercury. HEPA filters in the offgas line use stainless steel cloth that is reusable after cleaning.

4.7 System A-7: Slagging Rotary Kiln

The slagging rotary kiln system accomplishes both incineration and vitrification in a single step. Combustible and noncombustible solids along with glass-forming material or contaminated soil are added to the kiln inlet. The kiln output is a vitrified slag that requires no further stabilization.

System A-7 does not have a metal melting subsystem, because metal with entrained contamination is fed to the slagging kiln and is embedded in the discharged slag. Also, since the kiln is a one-step oxidation-stabilization unit, a separate vitrification subsystem similar to the baseline system is not needed.

Main thermal treatment. The main thermal treatment subsystem consists of a storage and characterization area, a rotary kiln fired by natural gas and air, an SCC, an air blower, and the associated combustion and feedstock transfer equipment. The thermal treatment subsystem receives combustible and noncombustible solids, metal with entrained contamination, sludge, and organic liquid. The slagging kiln performs the organic destruction and stabilization functions in one step. For more uniform and puff-free combustion, the slagging kiln selected for this study is designed to treat shredded waste.

The slagging rotary kiln is a commercial technology currently employed for hazardous waste treatment in Europe and in the United States. Some of the sludge from the aqueous waste treatment subsystem is also fed to the unit for drying and subsequent solidification with the slag. As the waste is fed into the kiln, necessary burner adjustments are made to maintain design levels of combustion and waste slagging. The kiln is equipped with graphite seals designed to minimize air leakage into or out of the kiln.

The typical temperature range for the slagging kiln is 1,500 to 2,500°F, but can also be operated at lower temperatures in the ashing mode. The residence time of solids in the kiln is typically one hour. The destruction of solids in the slagging mode is expected to be enhanced relative to the ashing mode because of the increased heat transfer rate. The kiln has a seal at the waste inlet, the slag outlet, and the

entrance to the attached SCC unit. A typical design includes a combination slag pot and SCC, which is attached to the kiln. The SCC is a refractory-lined vertical cylinder, operated at a combustion temperature of 2,500°F. At the bottom of the SCC, a sloped opening provides an exit for the liquid slag (or ash, if operated in the ashing mode).

4.8 System B-1: Pyrolysis

System B-1 combines an indirect-fired, electrically-heated, rotary kiln pyrolyzer and a SCC using oxygen combustion gas with the vitrification unit. Electrical heating and burning in oxygen starved-pyrolysis minimizes production of offgas. The pyrolysis gas is oxidized with pure oxygen in the SCC, which is followed by a standard wet-dry APC subsystem. System B-1 uses a standard feedstock preparation subsystem. Solid residues from the pyrolyzer are treated by vitrification. An oxygen lance would be used in the vitrifier to assure burnout of carbon from the pyrolyzer. The offgas from the vitrification unit is fed to the pyrolyzer SCC inlet, thus eliminating a separate APC subsystem for the primary stabilization subsystem. Aqueous secondary waste streams are treated in an aqueous waste treatment subsystem. Organics recovered from aqueous treatment are recycled to the thermal treatment unit. Sludges resulting from precipitation and filtration are transferred to the primary stabilization subsystem or, if necessary, to the secondary stabilization subsystem. The treated water is recycled in the system, as required, for process use. Differences between this system and the baseline system are outlined below.

Receiving and preparation. The receiving and preparation subsystem is the same as that of the baseline system except that sorting requirements are substantially greater. This is due to limits on the noncombustible material that can be present in the pyrolyzer feed material. Most of the noncombustible bulk material needs to be separated from the waste before it can be fed into the pyrolyzer.

Main thermal treatment. This subsystem differs from that of the baseline system by integrating a pyrolyzer unit and SCC with the vitrification unit. Noncombustible waste is fed to a dryer along with soil or other additives, and then fed to the melter for vitrification. Combustible waste undergoes partial combustion by being heated in an oxygen-starved chamber. The resulting gases are burned in an SCC to which oxygen is added in stoichiometric proportions. The pyrolyzer operates at a temperature of 1,200°F, and the SCC at a temperature of 2,200°F. The ash from the pyrolyzer is fed to the vitrification unit. This ash is typically a char with a high carbon content, which could pose a problem for the melter. Oxygen must be supplied to the melter for combustion of the carbon. Burning carbon in the vitrifier will create gas pockets in the slag, which makes the waste form less dense. The melter offgas also goes to the SCC.

Main thermal treatment APC. As with System A-1, the APC subsystem is based on dry filtration followed by wet offgas scrubbing. However, this APC subsystem has a smaller capacity, since indirectly heated oxygen combustion creates lower volumes and velocities of offgas than does air combustion. The smaller quantity of offgas and the lower temperature created by pyrolysis also result in a smaller quantity of fly ash.

Primary stabilization. As indicated before, the vitrifier is part of the incineration subsystem. The primary stabilization subsystem performs only cooling and packaging of slag.

4.9 System C-1: Plasma Furnace

System C-1 combines a plasma furnace with an SCC, both of which use air as the combustion gas. The plasma furnace performs three functions simultaneously: thermal treatment, vitrification, and metal melting. The SCC is followed by a standard dry/wet APC subsystem. The plasma furnace requires only that bulk lead and mercury be removed (for separate treatment) and that boxes, large metals, and debris be reduced in size to fit into the feed handling system and the plasma chamber; thus, feedstock preparation is minimal. The plasma furnace can accept bulk feed, including drums. This mode of operation is used only if the waste is adequately characterized to meet the RCRA permit restrictions. Contaminated soil or other glass or ceramic-forming additives are added to the furnace to produce a highly leach-resistant vitrified waste form. Solid residues from the plasma furnace, including radionuclides, can be drawn off in two streams: a molten glass stream containing the vitrified ash components, and a molten metal stream. Aqueous secondary waste streams are treated in an aqueous waste treatment subsystem. Organics recovered from aqueous waste treatment are recycled to the plasma furnace. Sludges resulting from precipitation and filtration are transferred to either the plasma furnace or, if necessary, to the secondary stabilization subsystem. Differences between this system and the baseline system are outlined below.

Receiving and preparation. System C-1 requires minimal processing during receiving and feedstock preparation. Bulk lead and mercury need to be removed and treated separately. Large pieces of bulk metal (steel, etc.) that require melting and other debris need only to be reduced in size sufficiently to fit the feed handling system and the plasma chamber.

Main thermal treatment. The main component of the incineration subsystem is a plasma furnace, which uses an electric arc. The arc produces a highly energized plasma that breaks the chemical bonds of waste materials. Plasma systems usually operate in a pyrolytic or starved-air mode in an attempt to minimize high-temperature formation of undesirable oxides of nitrogen. The offgases are burned in an SCC using air as the combustion gas.

Main thermal treatment APC. The APC subsystem has a smaller capacity than that of the baseline system, since the volume of offgas generated per unit mass of waste is smaller. (Even lower quantities of combustion gas could be obtained if oxygen were used instead of air.) It is likely that the capability to reduce levels of oxides of nitrogen in the offgas will be required.

Primary stabilization. An acceptable waste form is produced during incineration. The waste is slowly cooled in a slag chamber operating at an elevated temperature. After cooling, the waste form is moved to storage.

4.10 System C-2: Plasma Furnace, CO_2 Retention

The plasma furnace with oxygen combustion and CO_2 retention is an alternative to the conventional plasma furnace system (C-1). This system has been developed to study the effect of using oxygen for combustion and removing CO_2 from the offgas resulting in discharge of a minimum amount of offgas to the environment.

The SCC is followed by a dry APC subsystem, modified to include carbon dioxide absorption of the offgas into lime, similar to System A-4. This system includes removal of chlorides, CO_2, and water in the offgas in a fluidized bed. The remaining offgas, primarily oxygen, is recycled to the furnace. The CO_2 is absorbed in lime to form calcium carbonate. A small bleed-off stream from the offgas recycled to the furnace is also discharged to the atmosphere. After a given retention period, the carbonate is calcined

to release the CO_2, allowing the recycle of the lime. The CO_2 released from the calcining operation is monitored and discharged to the atmosphere.

4.11 System C-3: Plasma Gasification

This system is based on a conventional plasma furnace that operates in an oxygen-starved environment. It is designed to study the effect of operating a plasma furnace in a reducing mode and producing a synthesis gas that not only reduces the volume of offgas discharged to the environment, but produces an offgas that can be used for energy recovery. In this system, air is used as the torch gas, with steam added to the furnace to provide the oxidant.

The plasma furnace using steam performs two functions simultaneously: thermal treatment and vitrification. The plasma furnace requires that bulk lead and mercury be removed and treated separately and that bulk metal and large debris be reduced in size to fit into the feed handling system and the plasma chamber. The plasma furnace can accept shredded feed. Contaminated soil or other glass- or ceramic-forming additives are added to the furnace to produce a leach-resistant vitrified waste form. Molten solid residues from the plasma furnace, including radionuclides, are drawn off as a vitrified material.

Since the thermal treatment process is a reduction reaction (i.e., oxygen starved environment), the plasma furnace exhaust contains synthesis gas (referred to as syngas) which is primarily H_2, CO, and CO_2. The syngas contains impurities, such acidic gases and particulates, which must be removed. The syngas cleaning function is accomplished in an APC subsystem similar to the baseline system consisting of quenching, dry filtration, and wet scrubbing steps. The cleaned gas is either recovered by burning in a steam boiler or sent to a catalytic oxidation unit for conversion of H_2 and CO to H_2O and CO_2 and subsequent release to the atmosphere. Fly ash recovered from the APC dry filtration step is recycled to the plasma furnace. Sludges containing salts resulting from the APC wet scrubbing step are transferred to the secondary stabilization subsystem. The treated water is recycled into the system, as required, for process use.

System C-3 does not have a metal melting subsystem because metals with entrained contamination are melted in the plasma furnace and recycled when possible. Also, since the plasma furnace is a one-step oxidation-stabilization unit, a separate vitrification subsystem similar to the baseline system is not needed.

Main thermal treatment. The main component of the thermal treatment subsystem is a shredder and a plasma furnace, which uses a transfer electric arc contacting the slag layer as the anode. The furnace typically operates with a 3,000°F wall temperature and 1,800°F gas temperature. Heat is produced in the reactor chamber by the plasma torch. Steam is added to the chamber to provide an oxidant and to encourage the formation of carbon monoxide. The furnace operates in a reducing mode. The organics react with superheated steam, forming CO, CO_2, and H_2. The offgas consists primarily of H_2, CO, and CO_2. Metal will melt and sink to the bottom of the melt. Inorganic material forms vitrified slag, which is cooled into a stable waste form. The primary stabilization subsystem consists of collecting and cooling this metal-slag mixture.

4.12 System D-1: CO_2 Retention

System D-1 combines a sub-stoichiometric, fixed-hearth primary combustor (frequently referred to as a controlled-air incinerator) with an SCC, both of which use oxygen as the combustion gas. This system uses a fluidized bed absorber to absorb the carbon dioxide in the lime after treatment in a conventional APC, similar to Systems A-4 and C-2. The incineration subsystem is preceded by a standard feedstock preparation subsystem in which special precautions are taken to remove large pieces of

metal and other noncombustibles. Solid residues from the incineration subsystem are treated by vitrification or polymer solidification. Aqueous secondary waste streams are treated in an aqueous treatment subsystem. Organics recovered from aqueous waste treatment are recycled to the primary incinerator. Sludges resulting from precipitation and filtration are transferred to either the primary stabilization subsystem or, if necessary, to the secondary stabilization subsystem. Differences between this system and the previously discussed systems are outlined below.

Receiving and preparation. Receiving and preparation includes procedures to remove bulk metals and slag and tar formers.

Main thermal treatment. System D-1 employs a fixed-hearth incinerator in which waste is transported over a hearth by a ram feeder or other conventional type of feeder. A screw conveyor stirs the ash pile and eventually moves it to one or more ash ports. Combustible waste is heated in an oxygen-starved atmosphere, where it is volatilized and undergoes partial combustion. The resulting energy-bearing gases are burned in an SCC that runs on excess oxygen.

Aqueous waste treatment. This subsystem handles the water condensed from the offgas. This subsystem is smaller than that of the baseline because liquid waste from the scrubber has been eliminated.

Primary stabilization. This subsystem is the same as in the baseline system except that noncombustible materials in the feed must be dried. Soil is mixed with ash coming from the incinerator. Dryers are needed to remove water from the soil, sludge, and other materials before vitrification.

4.13 System E-1: Thermal Desorption

System E-1 takes advantage of RCRA land disposal regulations that allow treatment of waste classified as debris by grouting only. Waste classified as process residues requires incineration. System E-1 is based on a standard rotary kiln incinerator that uses air as the combustion gas, and is smaller than the baseline unit. The kiln is preceded by a standard feedstock preparation subsystem and followed by a standard dry/wet APC subsystem. Ash from this system goes to a vitrification unit or, if small, to grouting. The incineration subsystem is standard except for a thermal desorption step parallel to the thermal treatment unit. The desorber separates volatile organic compounds (VOCs) from debris as defined by RCRA. Soil can also be treated by the parallel thermal desorber. Waste components vaporized in the thermal desorber are condensed to a liquid and sent to the rotary kiln. Solid residues from this system are stabilized by grouting. Solids from the desorber are shredded and microencapsulated by grouting. Aqueous secondary waste streams are treated in an aqueous waste treatment subsystem. Organics recovered from aqueous waste treatment are recycled to the rotary kiln. Sludges resulting from precipitation and filtration are transferred to either the primary stabilization subsystem or, if necessary, to the secondary stabilization subsystem. Differences from the baseline system are outlined below.

Receiving and preparation. The receiving and preparation subsystem is similar to that of the baseline system but more waste characterization and segregation are required.

Thermal desorption. This subsystem, which uses an indirectly-heated calciner for thermal desorption, separates VOCs from the feedstock before waste is fed to the stabilization subsystem. Waste components vaporized in the thermal desorber are treated in an APC consisting of a stripper and condensers. Captured organic liquids are sent to the incineration subsystem. Solid residues from the desorber are sent to a debris grouting subsystem.

Debris grouting. The debris grouting subsystem stabilizes debris by mixing the shredded waste with grout consisting of cement, water, and sand. The mixture is poured into drums and allowed to cure. Once the grout has solidified, the drums are capped, washed, and moved to the certify and ship subsystem.

4.14 System F-1: Molten Salt Oxidation

The molten salt oxidation (MSO) subsystem is comprised of a thermal treatment subsystem, an APC, a salt recycle subsystem, and a primary stabilization subsystem with independent APC. Combustible waste is oxidized in a molten salt bed. The molten sodium carbonate acts as a catalyst for the oxidation of combustible waste. The bed also neutralizes halogenated acids and forms halogenated salts. Noncombustibles, such as metal and salt, collect in the bed and are removed by continuously transferring some of the salt bed into a collection vessel. The melt overflow from the thermal treatment subsystem is transferred to a salt recycling subsystem, where the ash is filtered out and sent to a primary stabilization subsystem and sodium carbonate salt is recovered and recycled back to the thermal treatment subsystem. An APC subsystem, which is based on dry filtration followed by wet scrubbing, is provided for treatment of the gas fumes from the MSO vessel. Fly ash from the APC subsystem is sent to a secondary stabilization subsystem where it is solidified with polymer. The fly ash consists mostly of salts. Since MSO can accept only combustible waste, all of the input noncombustible waste is sent directly to the primary stabilization subsystem. In the primary stabilization subsystem, noncombustible solids and ash are vitrified and packaged for certification and shipping.

The MSO system has fourteen major subsystems, including a salt recycle subsystem. Most of the subsystems are the same as the baseline system (A-1). Subsystems that are different from the baseline system are described below. Since the MSO thermal treatment unit processes only combustible waste, the sorting operations in the receiving and preparation subsystem are more extensive and, hence, the subsystem is larger than that included in the baseline system.

Main thermal treatment. The waste is size reduced and separated into combustible and noncombustible categories. The combustibles are processed in the molten salt oxidation subsystem, and the noncombustibles are processed in the primary stabilization subsystem. The combustible waste is size reduced to 1/8 of an inch or smaller to transport through the feed system and to assure total combustion in the bath. The combustible waste and air/oxygen are mixed in a molten sodium carbonate (Na_2CO_3) bed in an alumina-lined reactor. The molten bed is operated at temperatures of about 1,400 to 1,800 °F to maintain the melt viscosity. The moderate operating temperature limits the formation of nitrous oxide (NO). The offgas, principally CO_2 and H_2O, is sent to the APC subsystem. Some of the melt is continuously removed to prevent the buildup of ash and other inerts in the reactor. Salt bath viscosity control requires that the ash fraction be kept below 20% by weight. The salt must remain fluid to facilitate transfer of the melt overflow and enhance oxidation of the organic waste. The salt overflow is sent to the salt recycling subsystem.

Main thermal treatment APC. The APC subsystem has a dry gas filtration unit, wet gas scrubbing unit, and a system for CEM. In the dry gas filtration unit, the gas is partially quenched by water jets and filtered through a baghouse to remove salt carryover. Special features have been included to clean salt cakes accumulated in the reactor exhaust pipes. A centrifugal wet scrubber collector is provided downstream of the baghouse to remove any salt fumes that might have escaped the baghouse. The scrubber is followed by a reheater and HEPA filters. The salt from the baghouse is sent to the secondary stabilization subsystem.

Salt recycling. In the salt recycling subsystem, the ash and salt mixture is cooled, crushed, and dissolved in a water tank. The mixture is then filtered, separating the ash from the dissolved salt. The ash

slurry is dried and sent to the primary stabilization subsystem. The salt solution is sent to an evaporative crystallizer. The sodium carbonate will drop out of the solution in the form of crystals, because sodium carbonate has low solubility in water at room temperature. The salt crystal solution is routed to a centrifuge where the sodium carbonate salts are separated from the solution, later dried, and recycled back to the main thermal treatment subsystem. The supernate from the solution, which contains sodium chloride, is recycled to the dissolver tank or sent to the aqueous waste treatment subsystem for further treatment. The evaporated water collected from drying the ash sludge, sodium carbonate concentrate, and the evaporative crystallizer is condensed and sent to aqueous waste treatment or recycled to the dissolver tank.

Primary stabilization. The primary stabilization subsystem receives ash from the salt recycling subsystem and noncombustible waste feed from the receiving and preparation subsystem. The noncombustible waste feed is size reduced using a coarse shredder unit, which shreds waste and feeds it to a series of transport bins. A combined dryer and blender is added to reduce moisture in the waste feed entering the vitrifier. The vitrifier mixes soil with the ash, melts the mixture, and discharges a molten slag product into a waste container. The container of slag is cooled, capped, and sent to a decontamination station. The offgas from the vitrifier is sent to the primary stabilization APC. which has dry/wet gas filtration units and a system for CEM. In the dry gas filtration unit, the gas is partially quenched by water jets and filtered through a baghouse followed by HEPA filters. The fly ash is sent back to the vitrifier. A charcoal or activated carbon filter is added in front of the HEPA filter to remove any trace quantities of mercury that might be present in the offgas. A wet scrubber removes acids and salts. Waste liquor is routed to aqueous waste treatment.

4.15 System G-1: Molten Metal Waste Destruction

The main thermal treatment unit in system G-1 is based on a molten metal waste destruction process developed by Molten Metal Technology (MMT) of Waltham , Massachusetts. The process employs a chemical reactor vessel containing a molten metal bath that thermally destroys incoming feed materials and converts them to their elemental forms. Solids and gaseous additives and catalysts (e.g., oxygen, slag formers, fluxing agents, lime, and carbon) are injected into the molten bath in order to separate radionuclides or other contaminants from the recoverable material in the feedstock. The recoverable material is sent for recycle and reuse.

According to the manufacturer, a key feature of the molten metal waste destruction process is the ability to accomplish, in a single train, three major steps: organic destruction, residue stabilization, and conversion of the recoverable material for either reuse at the plant or recycling at other facilities. While destroying the incoming waste, three phases form in the molten bath reactor: molten metal, vitreous slag, and syngas. Although for hazardous waste all three phases are claimed to be recycled, in the ITTS study only the syngas and molten metal are assumed to be recyclable. The slag is a radioactive waste which requires disposal as LLW. An APC subsystem purifies the syngas by a combination of dry quenching, dry particulate removal and wet acid gas scrubbing steps. The purified syngas is used for generating plant steam. Alternatively, syngas can be oxidized in a thermal oxidizer and discharged directly to the atmosphere. Molten metal is removed from the reactor, cast, and sent offsite for use in fabrication of waste containers and other devices that could be employed during waste management operations in the DOE complex. Molten slag containing radionuclides is removed from the reactor, poured into waste containers, and sent for disposal.

System G-1 has neither the metal melting nor the metal decontamination subsystems that are part of the baseline system. Feed normally processed by these subsystems is processed by the molten metal reactor and recycled. The sort unit operation in the receiving and preparation subsystem is smaller than in the baseline system. This is due to the ability of the process to accept a wide variety of the hazardous and

toxic material in the feedstock. Also, since the molten metal reactor is a one-step reduction and stabilization unit, a separate vitrification subsystem similar to that of the baseline system is not needed.

Main thermal treatment. The main component of the thermal treatment subsystem is a sealed molten metal bath reactor that operates at temperatures near 3,300°F in a reducing (oxygen starved) environment. The reactor is a pressurized induction-heated melter vessel with an enlarged head space designed for control and removal of the material from gaseous or molten phases. The bulk solids discharged from the shredder outlet are collected in air-tight transportable bins and set aside in the feed preparation area. On demand, a given waste bin is lifted and placed on top of a feed mechanism mounted above the reactor.

Experiments by MMT indicate that from the partitioning stand point, most of the radionuclides found in DOE MLLW may be categorized into four general groups: (1) uranium and transuranium, (2) technetium, (3) cesium and strontium, and (4) cobalt, nickel, and other isotopes with an atomic weight near iron. MMT tests, using hafnium as a surrogate element, predict that the elements in the first group, uranium and transuranium, will most likely oxidize and go into the slag phase. This means that metal contaminated with these elements can be cleaned with a high decontamination factor rendering the metal suitable for recycling within the nuclear industry.

The subsystem has a bulk material mixing station provided for preparing a homogenous mixture of waste and solid additives when such a mixture is needed. Gaseous additives and liquid wastes are fed to the reactor via tuyeres (pipes with spare nozzles) located in the bottom of the reactor.

The metal felt normally operates in a reducing atmosphere, with sub-stoichiometric addition of oxygen for syngas production. The syngas on top of the molten bath is generally composed of a combination of carbon monoxide (CO), hydrogen (H_2), steam(H_2O), and impurities such as acidic gases and particulates. Nitrogen gas is injected into the reactor to maintain the required pressure and maintain an inert environment in the head space, and to sweep the gas out of the reactor head space. The reactor exhaust is sent to the APC for treatment before reuse.

High-temperature instrumentation and computer models are needed to either measure or predict parameters needed to control the molten bath chemistry and metallurgy. Studies of reactor geometry to optimize input feed, reaction turbulence, refractory life, product discharge, and maintenance are also underway.

Main thermal treatment APC. The function of the APC is to remove impurities to a level that syngas can be safely burned. The APC subsystem accomplishes this function by a combination of dry quenching, dry particulate removal, and wet gas scrubbing steps. The dry quenching step consists of passing the syngas exhaust from the reactor through a fluidized bed cooling unit. The fluidized bed unit cools the syngas and drops the temperature from 3,300°F to approximately 400-300°F. Silica sand or ceramic balls cooled by water-cooled coils are used as the fluidized medium. The sand in the fluidized bed cooler also acts as a cold trap filter and captures most of the volatilized metal escaping the reactor. Any waste residue from the fluidized bed is sent to the molten reactor for processing. Cooled syngas is processed through a cyclone separator, baghouse and HEPA filters to remove the solid particulates and fugitive bed media. A charcoal or activated carbon filter is added in front of the HEPA filter to remove any trace quantities of volatile organic compounds (VOCs) and mercury that might be present in the gas.

Particulate free syngas is then sent to the wet gas acid removal train. This train consists of a wet scrubber that is designed to remove dissolved acid precursors present in the syngas. An alkali scrubber is also available as backup to provide additional acid gas neutralization if necessary. Scrubber sludge is sent to the secondary stabilization subsystem where it is dried to powder and stabilized with polymer.

The clean hydrogen and carbon monoxide rich syngas is sent to a steam boiler for energy recovery or burned in a catalytic oxidizer. The catalytic oxidation unit operates at 1500 °F, where carbon monoxide and hydrogen gas is burned and any trace VOCs are destroyed.

4.16 System H-1: Steam Gasification.

The steam gasification system is designed to accommodate conventional organic waste gasification technologies that convert the organic feedstock into ash and synthesis gas (or syngas). This concept not only minimizes the amount of gas discharged to the environment, but produces a gaseous product that can be used for energy recovery.

The main process line consists of a thermal treatment subsystem based on steam gasification, an APC subsystem, and a syngas oxidation subsystem. The main thermal treatment subsystem processes sorted combustible waste and superheated steam in an indirectly heated reactor. The heat in the reactor breaks down the organic compounds into their elemental forms. Steam reacts with the decomposed elements to form syngas and ash. An APC subsystem purifies the syngas by a combination of wet quenching, dry particulate removal, and wet acid gas scrubbing steps. The purified syngas is used for generating plant steam. Alternatively, syngas can be oxidized in a catalytic oxidizer and discharged directly to the atmosphere.

The thermal treatment unit has a low tolerance for accepting noncombustibles in the feed. Therefore, noncombustible waste, ash from the main thermal treatment subsystem, and fly ash from the APC subsystem are routed to the primary stabilization subsystem, which uses a vitrification furnace for waste stabilization. Contaminated soil or other glass- or ceramic-forming additives are added to the vitrifier to enhance the leach resistance of the final waste form. The APC scrubber liquor is sent to the aqueous waste treatment subsystem.

The steam gasification system has thirteen subsystems. The sort unit operation in the receiving and preparation subsystem is larger than that of the baseline system. Most of the subsystems are the same as those of the baseline system (A-1), with the exception of the main thermal treatment and the APC subsystems. These two subsystems are described below. The primary stabilization subsystem receives noncombustible waste feed from the receiving and preparation subsystem and fly ash from the main thermal treatment APC, and is the same as that for the molten salt oxidation system (F-1).

Main thermal treatment. The main component of the thermal treatment subsystem is a steam reforming reactor. The key function of the reactor is to mix the waste with steam to decompose the organic material in a high-temperature environment. The gasification reactor design is a fluidized bed vessel technology.

The waste feed must be reduced in size for more efficient turbulence and mixing during gasification in the reactor. Superheated steam enters the reactor through spargers at the bottom of the fluidized bed reactor and facilitates mixing. The reactor is heated by an indirect heat source. At operation temperatures of approximately 1,300 to 1,400°F, and under reduced conditions, the organics react with superheated steam, forming syngas composed of CO, CO_2, H_2, and H_2O gases. The syngas is sent to the APC subsystem for purification and energy recovery. The bottom ash, solids, and some bed material removed from the bed are collected, cooled, and sent to the primary stabilization subsystem for vitrification.

Main thermal treatment APC. The APC subsystem is based on dry particulate filtration followed by wet acid scrubbing and final polishing of the syngas. In the dry filtration, the syngas passes through a cyclone unit, then a ceramic filter to remove coarse and fine particulates in the syngas.

4.17 System J-1: Joule-Heated Vitrification

The Joule-heated vitrification system is designed around a conventional glass making melter. The intent is to use a Joule-heated melter in a one-step oxidation-vitrification application for treating both combustible and noncombustible waste. Several vendors have developed, or are in the process of developing, this approach.

In a typical process, glass- or ceramic-forming additives or contaminated soil are added to the vitrification unit. Oxygen is added to the melter to oxidize the organic compounds. The upper part of the melter is provided with a plenum to house gas that has formed during combustion. Ash from the combustion and the glass-forming material mix in the melter to form a homogeneous product. Offgas from the vitrification subsystem is sent to an APC subsystem. The APC subsystem uses dry filtration followed by wet offgas scrubbing. Descriptions of the main subsystems are presented below.

The Joule-heated vitrification system has eleven subsystems. Since the main thermal treatment of the system is a single-step oxidation and vitrification process, a separate primary stabilization subsystem is not needed. Most of the subsystems are the same as those of the baseline system (A-1), with the exception of the main thermal treatment subsystem.

Main thermal treatment. The heart of the main thermal treatment subsystem is a vitrifier, which performs organic destruction and waste stabilization in one step. Combustible and noncombustible waste are size reduced. Liquid waste will be fed on a continuous mode to reduce unexpected spikes and allow maximum throughput. A dryer has not been considered at this point in the design, but could be used to reduce moisture in slurry and soil fed to the melter. The vitrifier mixes the soil with the waste feed, melts the mixture, and discharges a molten slag product into a waste container.

Glass handling. The glass handling subsystem consists of hardware necessary to remove molten glass from the melter, and cast the hot glass into a monolith.

4.18 System K-1: Thermal Desorption and Mediated Electrochemical Oxidation

The K-1 system is designed to accommodate flameless, low-temperature (less than 600°F) technologies for processing DOE's MLLW. In this system the design objective is to heat up combustible and noncombustible solids to vaporize low-boiling-point VOCs. This study assumes that 10% of the organic waste is volatilized. The vaporized VOCs are condensed and captured in an organic liquid form. After heating and removing the VOCs, combustible and noncombustible solid residues are stabilized in a low-temperature process such as grouting. The organic liquid is destroyed in a MEO cell, which is a low temperature oxidation process using liquid electrolytes.

The heating device employed in this system is an indirectly heated thermal desorber designed to receive and heat combustible and noncombustible waste to about 600°F. Vaporized compounds exiting the desorber are filtered in a sintered metal gas/solids separator. The gas is then cooled to remove any residual mercury in a heat exchanger. The condensed mercury is collected in a liquid container and transferred to a mercury amalgamation subsystem. A secondary heat exchanger condenses the liquid water and volatilized compounds into a liquid form. The condensed liquid is sent to a liquid organic destruction subsystem based on MEO technology. Solid residue from the desorber is transferred to the primary stabilization unit where residue is grouted.

In the liquid organic waste treatment subsystem, an MEO reactor converts the incoming organics to gaseous products. The offgas from MEO is treated by neutralization to remove chlorine, followed by catalytic oxidation. Aqueous secondary waste streams generated by the recycling of spent electrolyte are

processed in a fractionator unit. Solids recovered are sent to secondary stabilization. The distillate is condensed, and the sulfuric acid is separated and recycled.

This system has all the thirteen subsystems included in the baseline system plus an additional liquid organic treatment subsystem. Most of the subsystems are the same as in the baseline system (A-1), with the exception of the main thermal treatment, the main thermal treatment APC, liquid organic treatment (MEO), and the primary stabilization subsystems. Also, the aqueous waste treatment subsystem no longer has the organic liquid waste treatment function. This function has been transferred to a new subsystem, the liquid organic waste treatment subsystem (the MEO process). Subsystems that are different from the baseline system are described below.

Main thermal treatment. The main thermal treatment subsystem consists of a feed preparation and characterization area, an indirectly heated thermal desorber, and the associated heating and feedstock transfer equipment. The thermal treatment subsystem receives shredded combustible and noncombustible solids and sludge. Organic liquid bypasses the desorber and is transferred directly to the organic liquid waste treatment subsystem. The rotary thermal desorber volatilizes organics and water at temperatures of 500 to 600°F. The remaining solids, which includes organics that did not volatilize in the desorber, are stabilized by cement grouting in the primary stabilization subsystem. The temperature of the desorber is kept below the melting point of most plastic materials to avoid creating excessive chlorinated gas, but high enough so that it volatilizes most organic compounds.

Main thermal treatment APC. The APC subsystem uses dry sintered metal filtration, two stage condensation, carbon and HEPA filtration followed by catalytic oxidation of noncondensable gases. The main purpose of the APC system is to condense water and volatile organics for treatment in the organic liquid waste subsystem. Following the desorber, gas enters the metal filter for removal of particulates. The offgas is passed through a heat exchanger designed to condense mercury for transfer to the mercury amalgamation subsystem. The second stage heat exchanger condenses water, and volatile organics for treatment in the liquid organic waste treatment subsystem. The remaining offgas passes through carbon and HEPA filters. Noncondensable gas and remaining volatile organics such as methane are combusted in a catalytic oxidizer, before discharge to the atmosphere.

Liquid organic waste treatment. The liquid organic waste treatment subsystem consists of feed characterization and batching tanks, electrolyte circulation tanks, mediated electrochemical oxidation reactors, offgas treatment by neutralization and catalytic oxidation, and associated pumps and instruments. The liquid organic feed from the condenser following thermal desorption is blended with other liquid organic waste streams. Electrolyte is recycled from the electrochemical reactors. Sulfuric acid/cobalt sulfate electrolyte and water are continually supplied to the circulation tank. The ratio of input waste feed to recirculating electrolyte is approximately 2% by weight.

The MEO reactors operate at 50 to 60°C and atmospheric pressure. The electrolytic cells are packaged into modular units. An electrolyte solution of cobalt sulfate and sulfuric acid is recirculated through a series of cells in the MEO unit at rates of up to 100 gpm. Electrical energy is supplied to the anode and cathode. The oxidized metal mediator acts as the primary active oxidizer to destroy organics. The cobalt is transformed from Co^{2+} to $Co^{3+} + e^-$. The metal ion reacts with organic species or water to produce a reactive intermediate such as the hydroxyl radical, which also oxidizes any organic material. A side stream of the electrolyte solution is bled off to prevent buildup of inerts and to recycle sulfuric acid.

Offgas is generated at the cathode (primarily H_2) and at the anode (primarily CO_2, Cl_2 from chlorocarbons and small amounts of O_2). The anode stream is put through a caustic scrubber to convert the chlorine to hypochlorite. Both offgas streams are put through a catalytic oxidizer to react the hydrogen with air to form water and to destroy any volatile organics that may vaporize from the MEO

reactor. Additional air must be added to the catalytic oxidizer to control the heat generated by the hydrogen oxidation reaction.

Primary stabilization. The primary stabilization subsystem receives desorbed solids from the main thermal treatment subsystem, and other solid waste from the receiving and preparation subsystem. The stabilization process may be classified as macroencapsulation, which meets EPA requirements for stabilizing solid wastes that fall under the debris rule.

4.19 System L-1: Thermal Desorption and Supercritical Water Oxidation

The thermal desorption step is similar to system K-1. The organic liquid is destroyed in a SCWO reactor, which is a low-temperature, high-pressure water oxidation process. Several vendors have developed or are in the process of developing this approach.

In the liquid organic waste treatment subsystem a SCWO reactor using the properties of supercritical water oxidizes organic waste to gaseous products. Supercritical water is water at a temperature above 705°F and a pressure above 218 atm. Supercritical water has properties different from those of subcritical water. Organic compounds that are normally immiscible in water are miscible in supercritical water. Inorganic compounds, such as salts, are almost completely insoluble in supercritical water. These properties allow a quick and complete oxidation of organic waste in the reactor vessel. Hydrogen peroxide or pure oxygen is used as the oxidant in the reaction. Salts formed from the inorganic elements that are ubiquitous in most waste streams either precipitate out of the supercritical water or are removed as offgas. This gas is normally not acidic in nature and requires minimal further treatment before it can be discharged. Continuous emission monitoring is performed before the offgas is discharged. The precipitated salts are stabilized before disposal.

Most of the thirteen subsystems are the same as in the baseline system (A-1), or system K-1, with the exception of the main thermal treatment, the main thermal treatment APC, liquid organic waste treatment (SCWO), and the primary stabilization subsystems. Also, the aqueous waste treatment subsystem no longer treats organic liquids. This function has been transferred to a new subsystem, the liquid organic waste treatment subsystem (the SCWO process). However, the size of the aqueous waste treatment subsystem will remain the same as the baseline system because of the added duty of treating liquid waste effluent from the SCWO process. Subsystems that are different from the baseline system are described below.

Liquid organic waste treatment. The liquid organic waste treatment subsystem consists of feed characterization, feed and additive pressurization, the SCWO reactor, and two treatment trains for liquids/solid separation and offgas air pollution control. Input waste to this system consists of organic liquids and organic sludge. Organic sludge is filtered to an acceptable size for the SCWO process. Optimal performance is achieved when the maximum particle size in the waste stream is about 100 μm. Material exceeding the 100 μm limit is sent to primary stabilization.

The SCWO reaction process consists of three subprocesses: feed preparation, reaction, and air pollution control. In the feed preparation step, the reactants are pressurized above 218 atm and heated above 705°F. Products from the oxidation reaction include H_2O, CO_2, and inorganic salt precipitates. Salts are separated from the aqueous phase in an agitated thin-film filter and evaporator. The inorganic salts are sent to the secondary stabilization subsystem while the offgas is further treated by activated carbon adsorption and HEPA filtration. Liquid from the thin-film filter is polished using activated carbon and ion-exchange resins, and is then tested. Next, it is either recycled or sent for further treatment to the aqueous waste treatment subsystem.

Process Flow Diagrams of All Systems

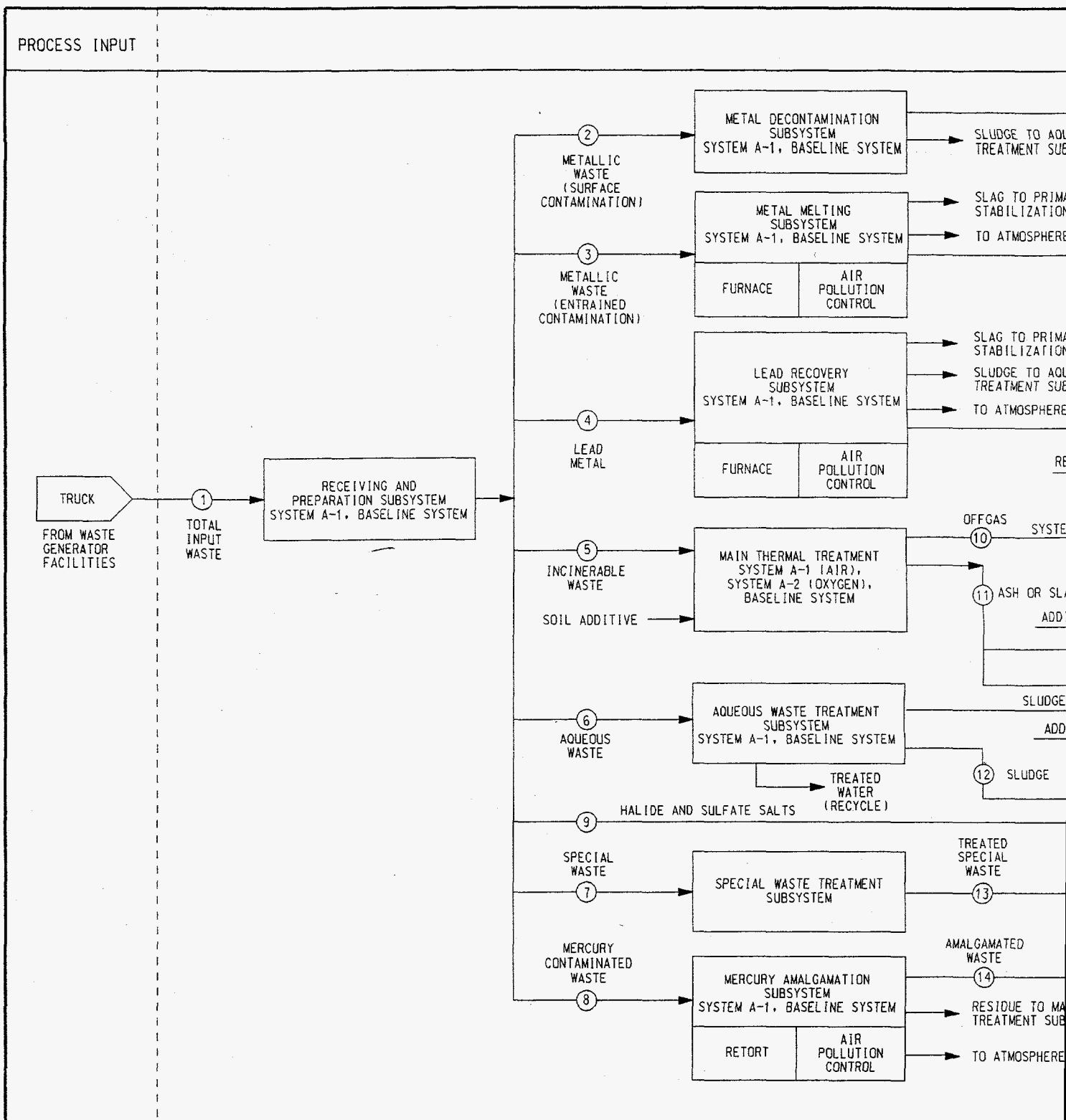

ROTARY KILN AIR FOR COMBUSTION (BASELINE SYSTEM)	1 TOTAL INPUT WASTE	PRIMARY WASTE INPUT 2 METALLIC WASTE (SURFACE CONTAMINATION)	3 METALLIC WASTE (ENTRAINED CONTAMINATION)	4 LEAD METAL	5 INCINERABLE WASTE	6 AQUEOUS WASTE	7 SPECIAL WASTE	8 MERCURY CONTAMINATED WASTE	9 HALIDE AND SULFATE SALTS	OF
FLOW RATE (LB/HR)	2,927	468	149	26	2,000	80	153	50	1	R (8,448

Figure 4-1. Rotary Kiln: PFD for Overall System (Systems A-1 through A-6).

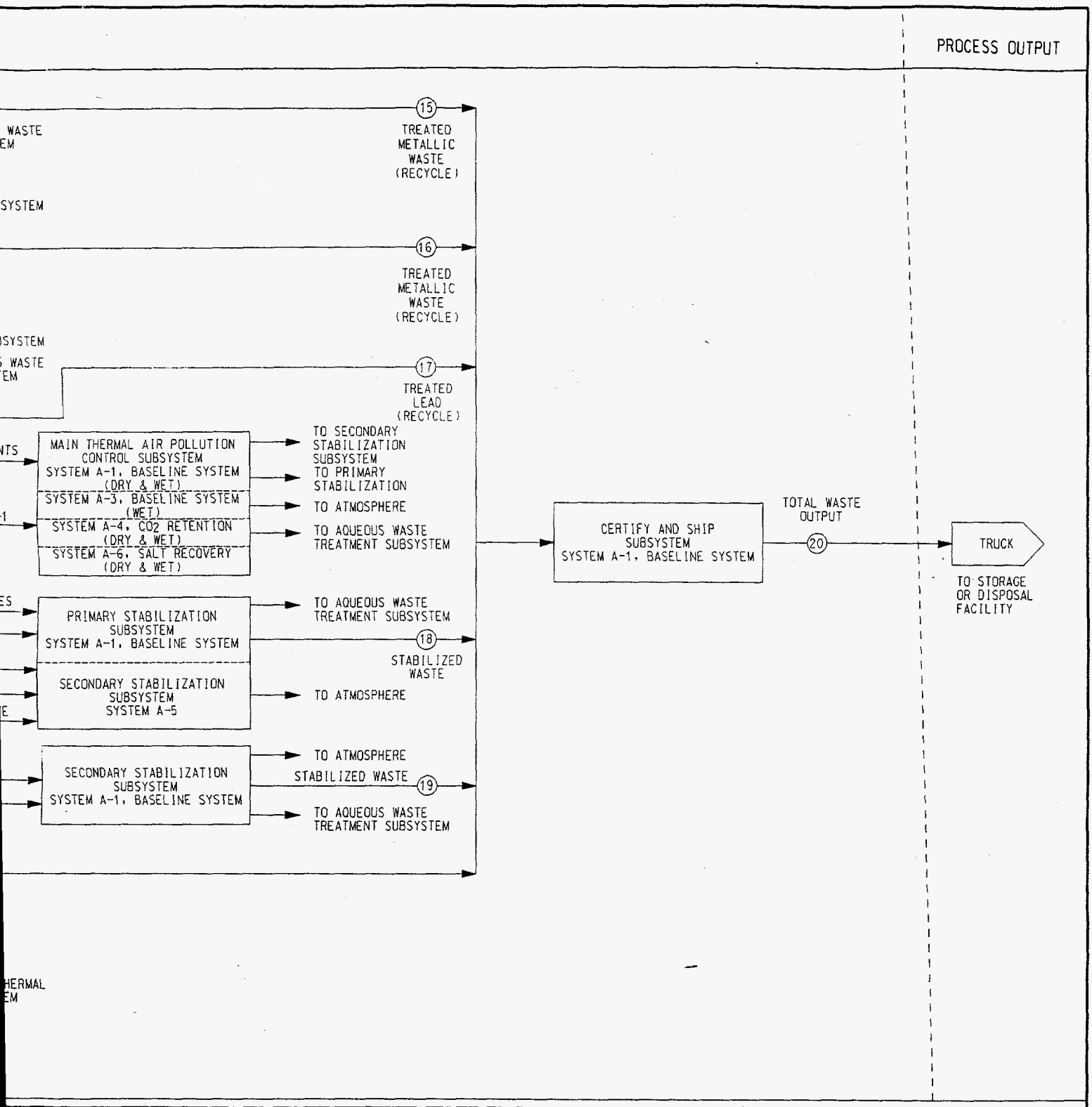

	SECONDARY WASTE OUTPUT							STABILIZED WASTE OUTPUT		
	11 ASH OR SLAG	12 SLUDGE	13 TREATED SPECIAL WASTE	14 AMALGAMATED WASTE	15 TREATED METALLIC WASTE (RECYCLE)	16 TREATED METALLIC WASTE (RECYCLE)	17 TREATED LEAD (RECYCLE)	18 STABILIZED WASTE	19 STABILIZED WASTE	20 TOTAL SYSTEM OUTPUT
41)	RANGE ((862-1,196)	RANGE (30-1,981)	153	11	463	134	20	RANGE (1,132-1,518)	RANGE (20-2,402)	RANGE (2,310-3,183)

FILENAME: 0527F18.DGN PLOT DATE: 2/28/95

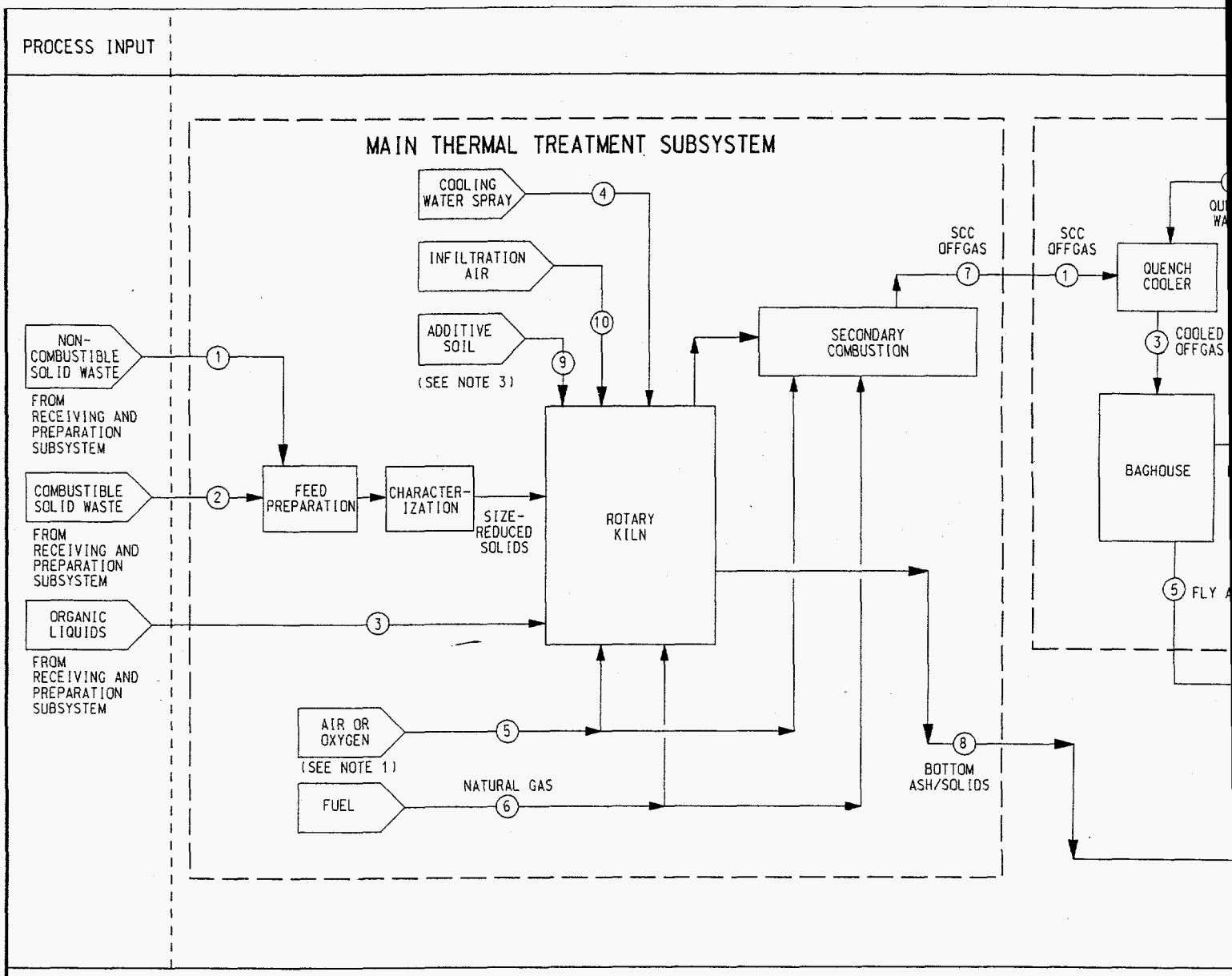

NOTES:

1. SYSTEM A-1 EMPLOYS AIR FOR COMBUSTION. SYSTEM A-2 EMPLOYS OXYGEN.
2. SECONDARY WASTE INPUT FROM VARIOUS SUBSYSTEMS NOT SHOWN.
3. ADDITIVE SOIL = 50% OF INERT MATERIAL IN FEED.
4. INFILTRATION AIR INCLUDED WITH INPUT AIR UNLESS NOTED.
5. TRACE METALS REMOVED FROM OFFGAS IN THE AIR POLLUTION CONTROL SUBSYSTEM ARE ROUTED TO SECONDARY STABILIZATION AND NOT SHOWN ABOVE. (SEE GENERAL MASS FLOW RATES).

MAIN THERMAL TREATMENT SUBSYSTEM	1 SORTED NON-COMBUSTIBLE SOLID WASTE	2 SORTED COMBUSTIBLE SOLID WASTE	3 ORGANIC LIQUIDS	4 COOLIN WATER SPRAY
FLOW RATE (LB/HR) (SYSTEM A-1)	1340	609	51	482
FLOW RATE (LB/HR) (SYSTEM A-2)	1340	609	51	1,82
MAIN THERMAL TREATMENT AIR POLLUTION CONTROL SUBSYSTEM	1 SCC OFFGAS	2 QUENCH WATER	3 COOLED OFFGAS	4 FILTER OFFGA
FLOW RATE (LB/HR) (SYSTEM A-1)	21,420	10,221	31,641	31,34
FLOW RATE (LB/HR) (SYSTEM A-2)	8,448	4,890	13,338	13,03

Figure 4-2. Rotary Kiln: PFD for incineration (Systems A-1 and A-2) and Dry and Wet Air Pollution Control Subsystems (System

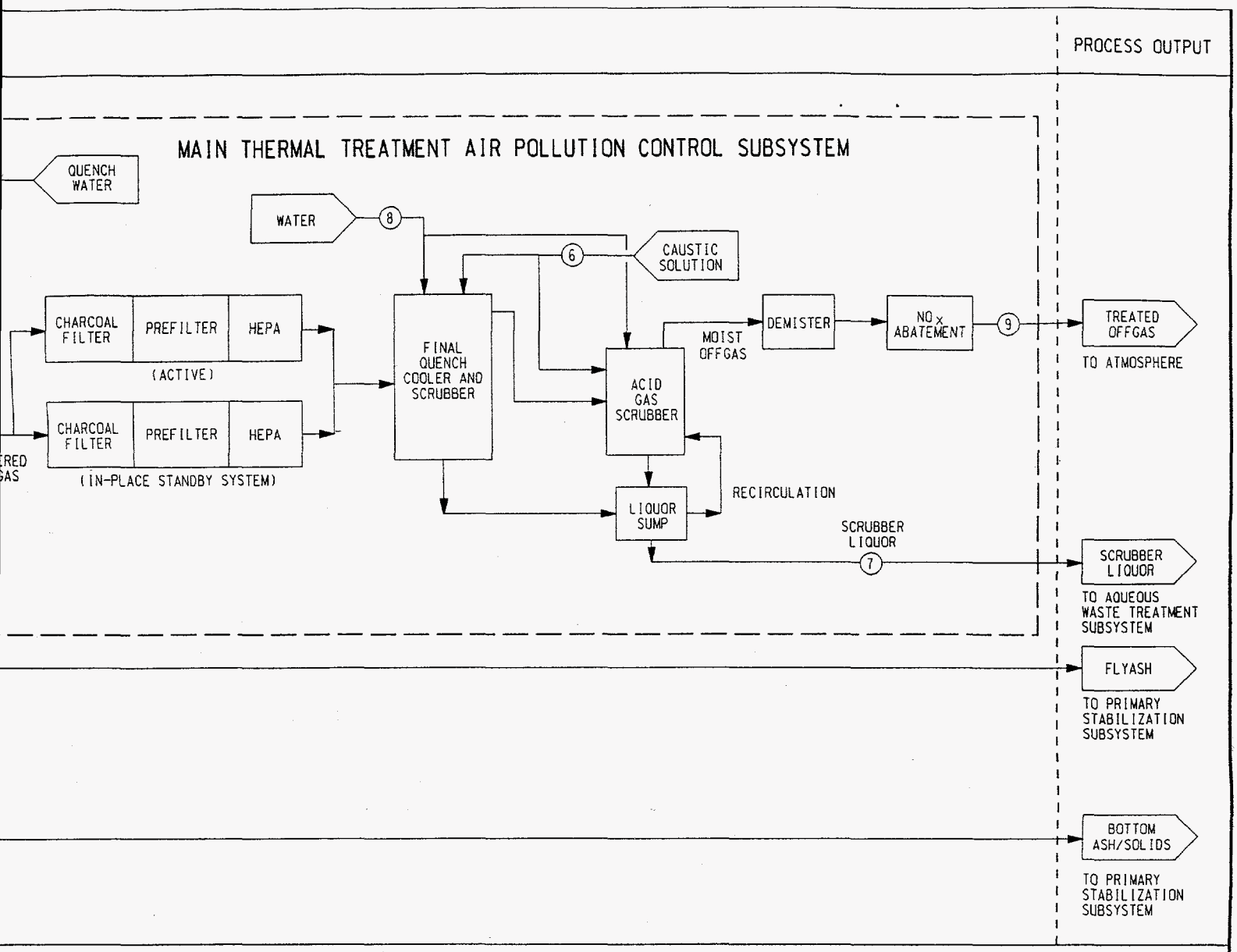

	5		6	7	8	9	10
	AIR	OXYGEN	NATURAL GAS	SCC OFFGAS	BOTTOM ASH/SOLIDS	ADDITIVE SOIL	INFILTRATION AIR
	7859	-	9,082	21,420	1,196	498	2,695
	-	1,830	796	8,448	1,196	498	2,695

	5	6	7	8	9	
	FLY ASH	CAUSTIC SOLUTION (20% NaOH)	SCRUBBER LIQUOR	SCRUBBER/ COOLER WATER	TREATED OFFGAS	
	299	156	13,474	2,181	20,200	
	299	156	9,996	2,181	5,378	

-1 and A-2).

FILENAME: 0527F18.DGN PLOT DATE: 2/28/95

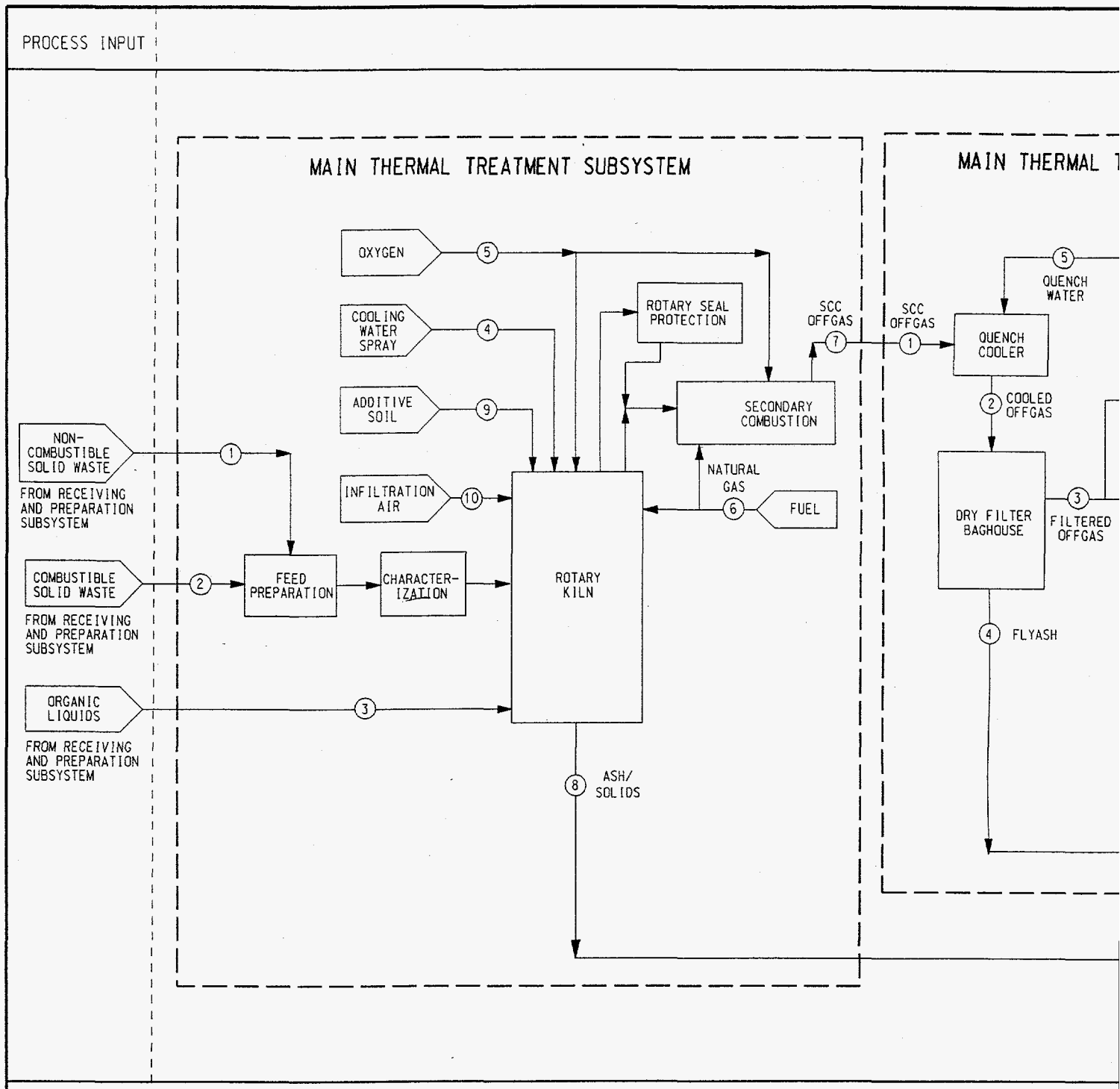

NOTES:

1. 90% OF RECOVERED LIME IS RECYCLED. 10% OF RECOVERED LIME IS SENT TO SECONDARY STABILIZATION.
2. THE BLEED STREAM INCLUDES THE N_2 FROM THE INFILTRATION AIR + UNUSED O_2
3. ADDITIVE SOIL = 50% OF THE FEED TO PRIMARY STABILIZATION
4. TRACE METALS REMOVED FROM OFFGAS IN THE AIR POLLUTION CONTROL SUBSYSTEM ARE ROUTED TO SECONDARY STABILIZATION AND NOT SHOWN ABOVE.

MAIN THERMAL TREATMENT SUBSYSTEM	1 NON-COMBUSTIBLE SOLID WASTE	2 COMBUSTIBLE SOLID WASTE	3 ORGANIC LIQUIDS	4 COOLING WATER SPRAY
FLOW RATE (LB/HR)	1,340	609	51	1
MAIN THERMAL TREATMENT AIR POLLUTION CONTROL SUBSYSTEM	1 SCC OFFGAS	2 COOLED OFFGAS	3 FILTERED OFFGAS	4 FLYASH
FLOW RATE (LB/HR)	28,241	41,675	13,434	299

Figure 4-3. Rotary Kiln: PFD for Dry and Wet Air Pollution Control Subsystem with CO_2 Retention (System A-4).

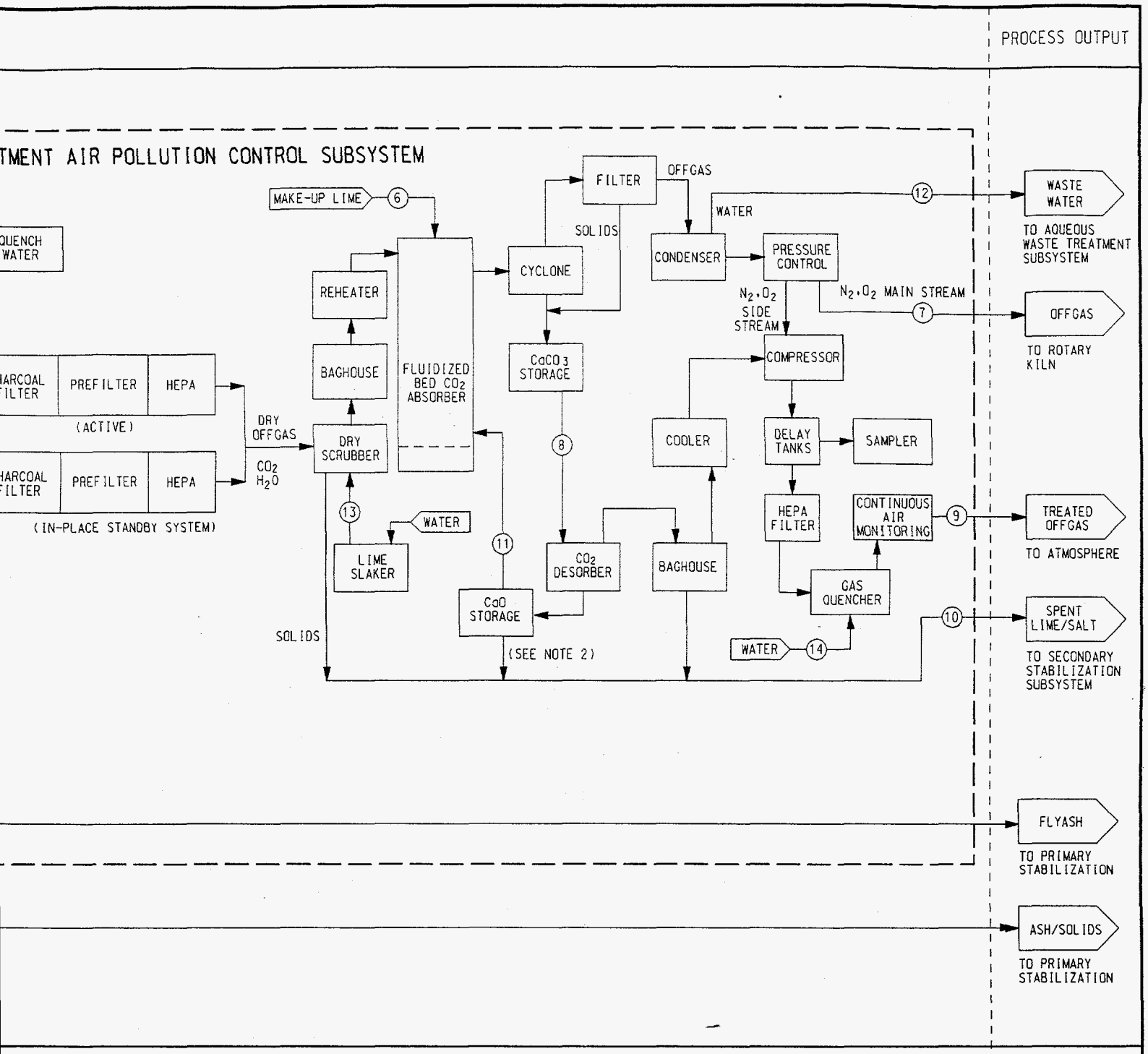

5	6	7	8	9	10				
OXYGEN	NATURAL GAS	SCC OFFGAS	ASH/SOLIDS	ADDITIVE SOIL	INFILTRATION AIR				
198	3,586	28,241	1,196	498	2,695				
5	6	7	8	9	10	11	12	13	14
QUENCH WATER	MAKE-UP LIME	SCRUBBED OFFGAS	$CACO_3$	TREATED OFFGAS	SPENT LIME/ SALT & TRACE METALS	RECYCLE LIME (SEE NOTE 1)	WASTE WATER	RECYCLED LIME	WATER
41,376	374	20,460	6,664	6,127	434	3,362	15,653	57	925

FILENAME:0527F112.DGN PLOT DATE: 2/28/95

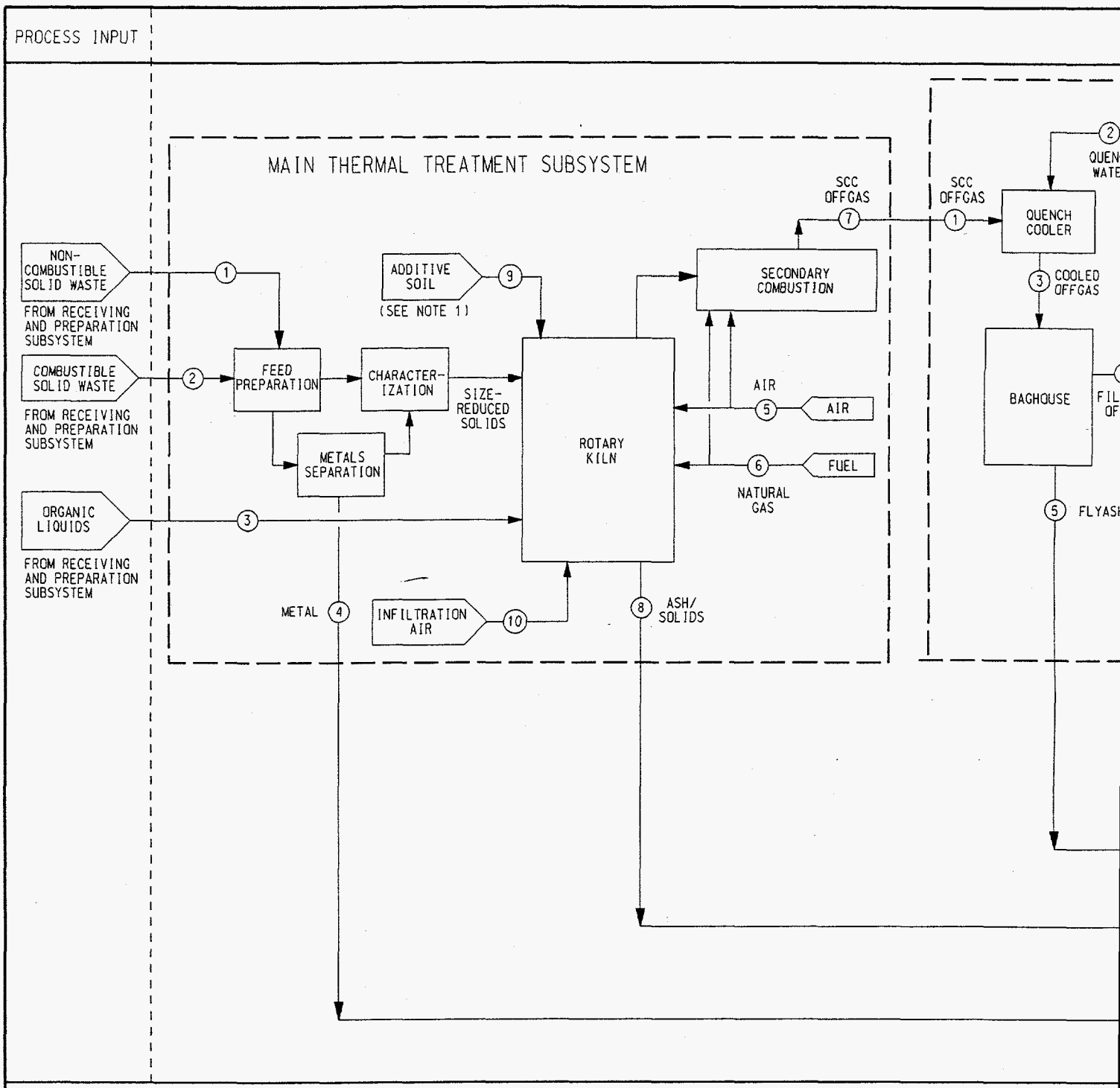

NOTE:

1. ADDITIVE SOIL = 50% OF THE FEED TO PRIMARY STABILIZATION.
2. TRACE METALS REMOVED FROM OFFGAS IN THE AIR POLLUTION CONTROL SUBSYSTEM ARE ROUTED TO SECONDARY STABILIZATION AND NOT SHOWN ABOVE.

MAIN THERMAL TREATMENT SUBSYSTEM	① NON-COMBUSTIBLE SOLID WASTE	② COMBUSTIBLE SOLID WASTE	③ ORGANIC LIQUIDS	④ METAL	⑤ AIR	NAT G
FLOW RATE (LB/HR)	1,340	609	51	8	7,859	9,
MAIN THERMAL TREATMENT AIR POLLUTION CONTROL SUBSYSTEM	① SCC OFFGAS	② QUENCH WATER	③ COOLED OFFGAS	④ FILTERED OFFGAS	⑤ FLYASH	Na
FLOW RATE (LB/HR)	21,423	10,224	31,647	31,350	297	7

Figure 4-4. Rotary Kiln: PFD for Dry and Wet Air Pollution Control Subsystem with Salt Recovery (System A-6).

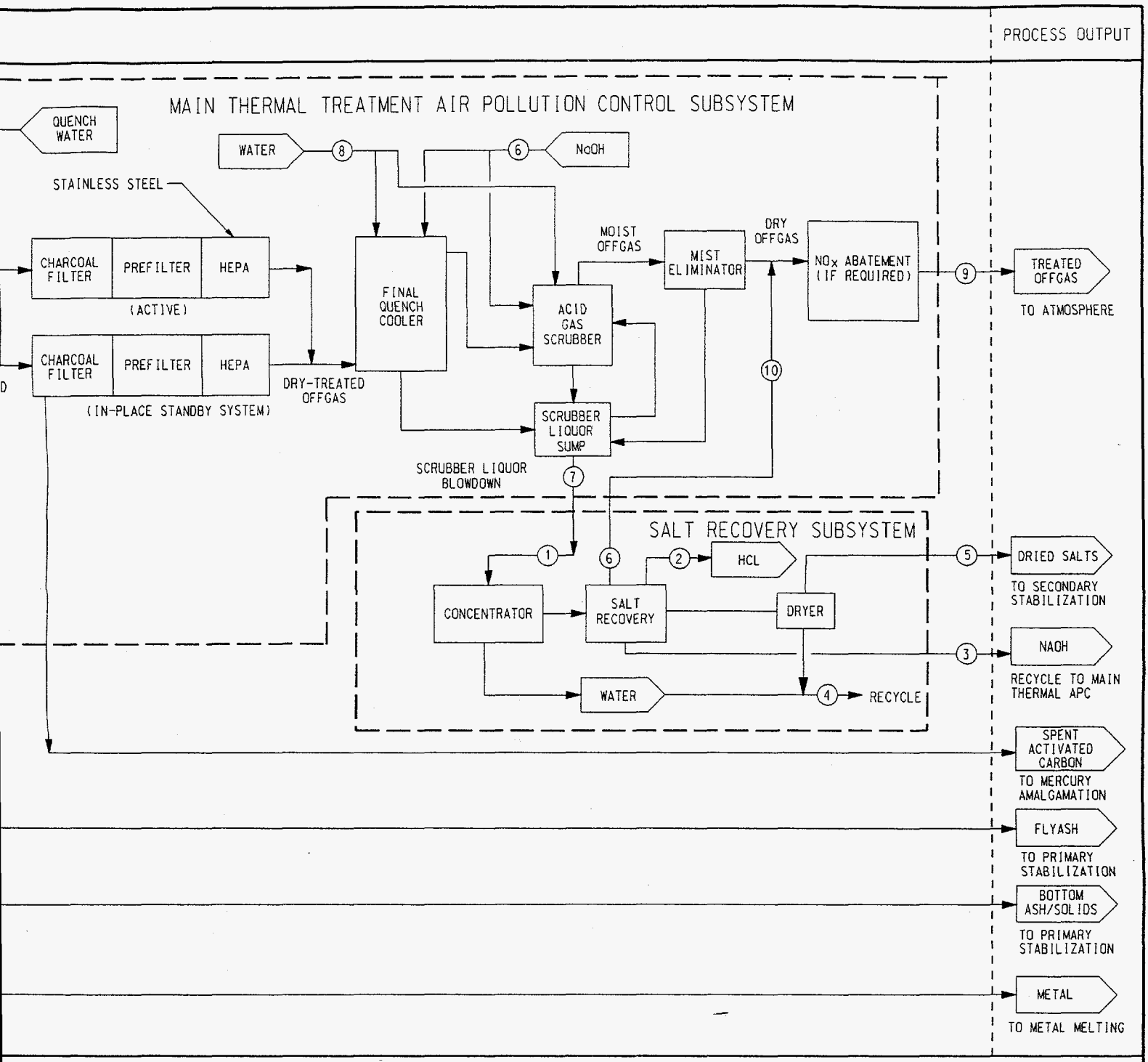

	7 SCC OFFGAS	8 ASH/ SOLIDS	9 ADDITIVE SOIL	10 INFILTRATION AIR	SALT RECOVERY SUBSYSTEM	1 SCRUBBER LIQUOR BLOWDOWN	2 HCL	3 NaOH	4 WATER	5 DRIED SALTS
	21,423	1,188	495	2,695	FLOW RATE (LB/HR)	13,480	140	78	13,226	0.24
	7 SCRUBBER LIQUOR BLOWDOWN	8 SCRUBBER/ COOLER WATER	9 TREATED OFFGAS	10 OFFGAS		6 OFFGAS				
	13,480	2,259	20,241	38		38				

FILENAME: 0527F113.DGN PLOT DATE: 2/28/95

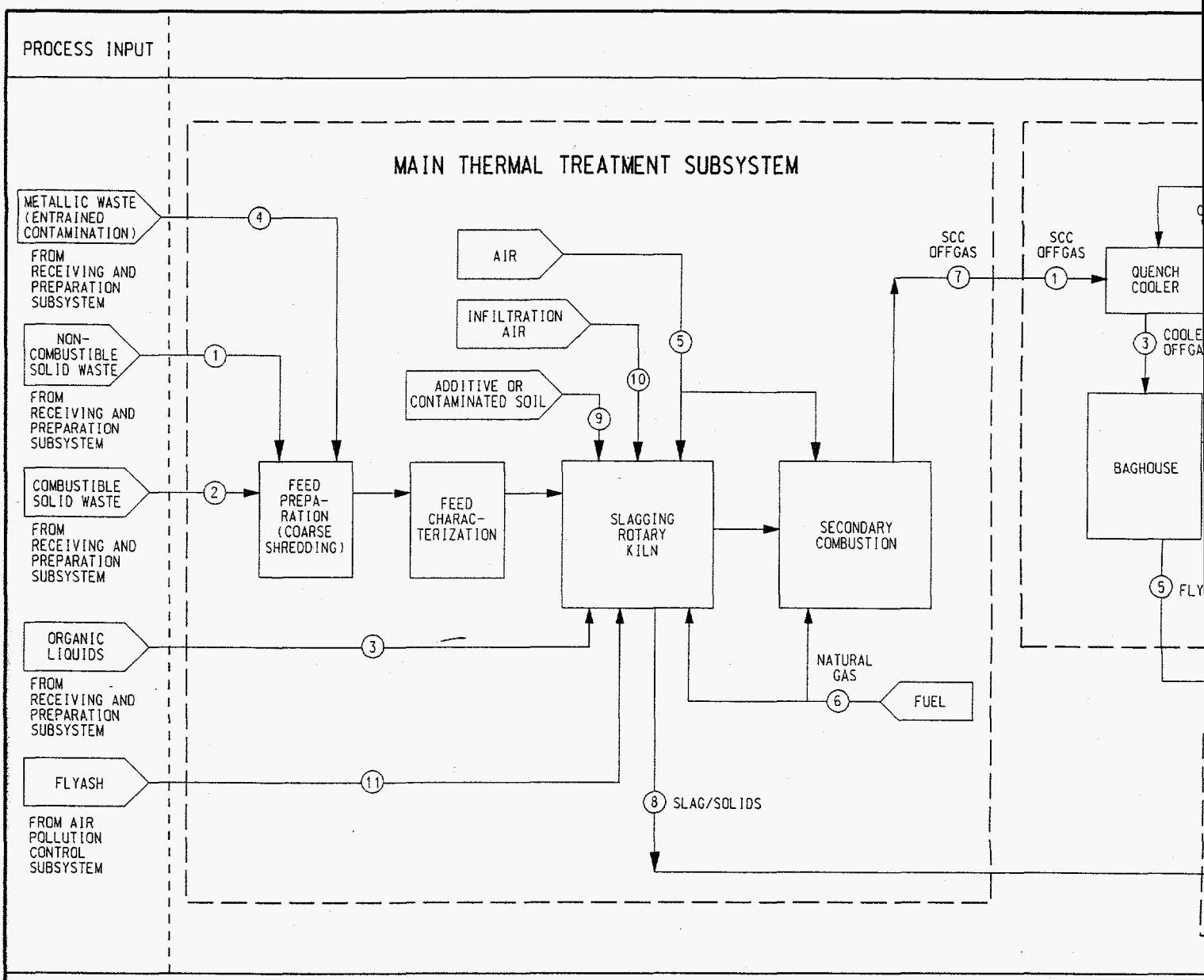

NOTES:

1. SECONDARY WASTE INPUT FROM VARIOUS SUBSYSTEMS NOT SHOWN.
2. ADDITIVE OR CONTAMINATED SOIL = 50% OF INERT MATERIAL IN FEED.
3. TRACE METALS REMOVED FROM OFFGAS IN THE AIR POLLUTION CONTROL SUBSYSTEM ARE ROUTED TO SECONDARY STABILIZATION AND NOT SHOWN ABOVE.

MAIN THERMAL TREATMENT SUBSYSTEM	1 SORTED NON-COMBUSTIBLE SOLID WASTE	2 SORTED COMBUSTIBLE SOLID WASTE	3 ORGANIC LIQUIDS	M (C
FLOW RATE (LB/HR) (SYSTEM A-7)	1,340	609	51	
MAIN THERMAL TREATMENT AIR POLLUTION CONTROL SUBSYSTEM	1 SCC OFFGAS	2 QUENCH WATER	3 COOLED OFFGAS	
FLOW RATE (LB/HR) (SYSTEM A-7)	27,561	15,425	42,985	
PRIMARY STABILIZATION SUBSYSTEM	1 SLAG	2 PACKAGED SLAG		
FLOW RATE (LB/HR) (SYSTEM A-7)	1,691	1,691		

Figure 4-5. Slagging Rotary Kiln: PFD for Main Thermal Treatment, Air Pollution Control, and Primary Stabilization Subsyste

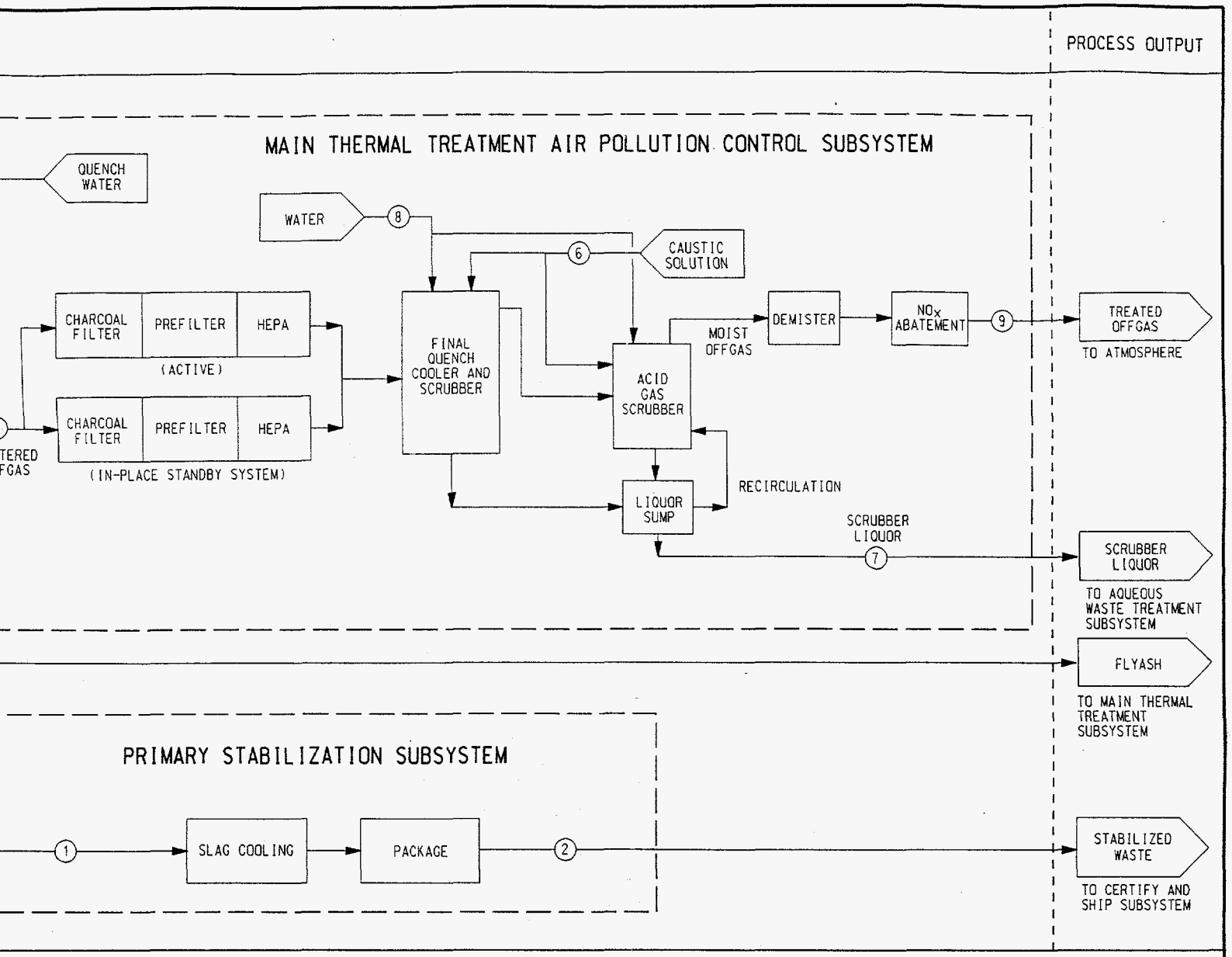

4 LIC WASTE AINED MINATION)	5 AIR	6 NATURAL GAS	7 SCC OFFGAS	8 SLAG/SOLIDS	9 ADDITIVE SOIL	10 INFILTRATION AIR	11 FLYASH
149	6,107	17,314	27,561	1,691	564	2,695	423
4 LTERED OFFGAS	5 FLY ASH	6 CAUSTIC SOLUTION (50% SOLUTION)	7 SCRUBBER LIQUOR	8 SCRUBBER/ COOLER WATER	9 TREATED OFFGAS		
42,559	423	156	18,592	2,181	26,304		

(System A-7).

FILENAME: PFDSA-7.DGN PLOT DATE: 02/22/95

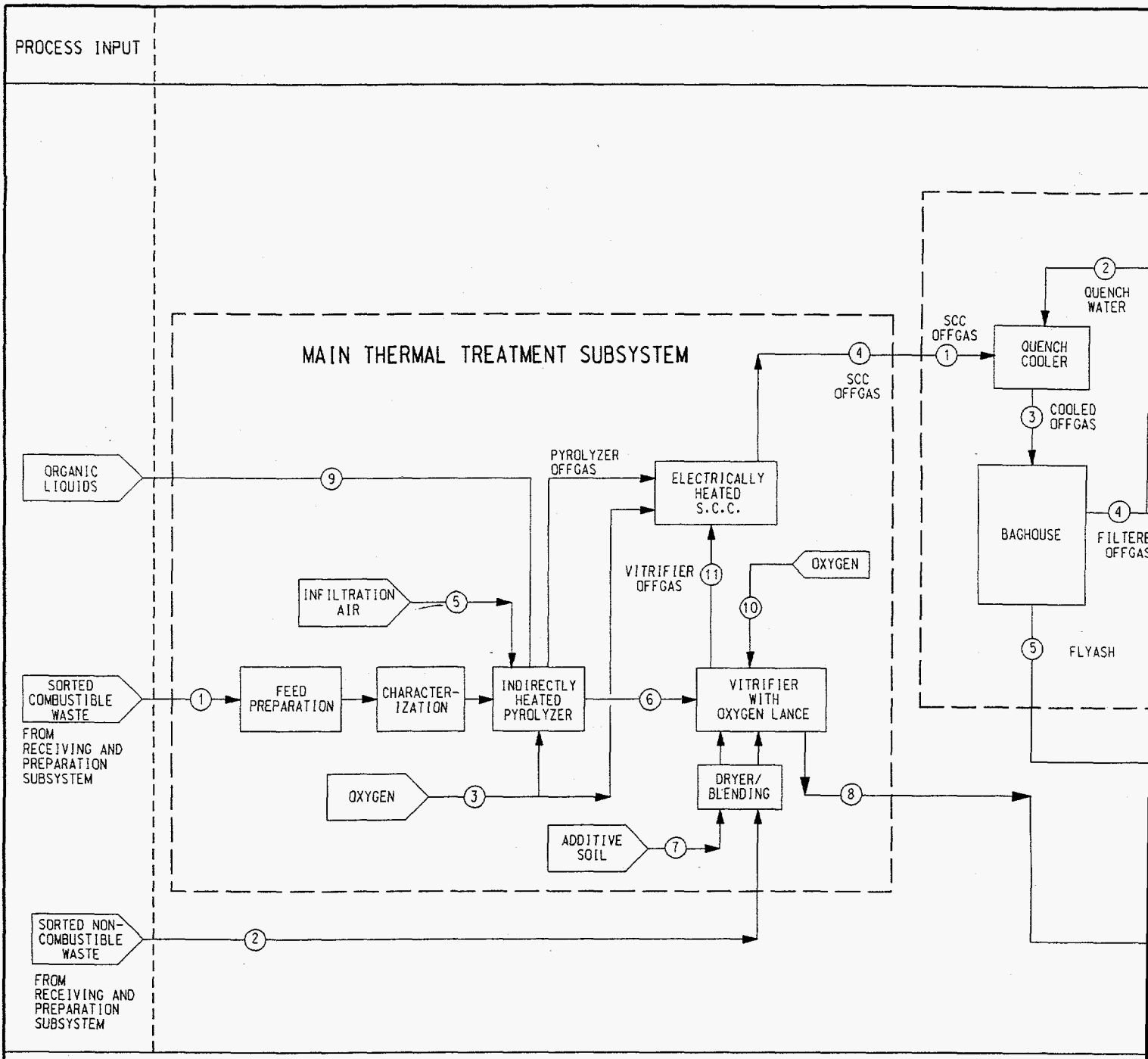

NOTES:

1. ALL INPUT SOLID WASTE MUST BE SORTED AND CATEGORIZED AS EITHER COMBUSTIBLE OR NON-COMBUSTIBLE SOLIDS.

2. ADDITIVE SOIL = 50% OF THE FEED TO PRIMARY STABILIZATION.

3. TRACE METALS REMOVED FROM OFFGAS IN THE AIR POLLUTION CONTROL SUBSYSTEM ARE ROUTED TO SECONDARY STABILIZATION AND NOT SHOWN ABOVE (SEE GENERAL MASS FLOW RATES).

PRIMARY STABILIZATION SUBSYSTEM	(1) VITRIFIER SLAG	(2) PACKAGED SLAG
FLOW RATE(LB/HR)	1,495	1,495
MAIN THERMAL TREATMENT SUBSYSTEM	(1) SORTED COMBUSTIBLE WASTE	(2) SORTED NON-COMBUSTIBLE WASTE
FLOW RATE (LB/HR)	609	1,340
MAIN THERMAL TREATMENT AIR POLLUTION CONTROL SUBSYSTEM	(1) SCC OFFGAS	(2) QUENCH WATER
FLOW RATE (LB/HR)	2,397	1,411

Figure 4-6. Pyrolysis: PFD for Incineration, Air Pollution Control, and Primary Stabilization Subsystems (System B-1).

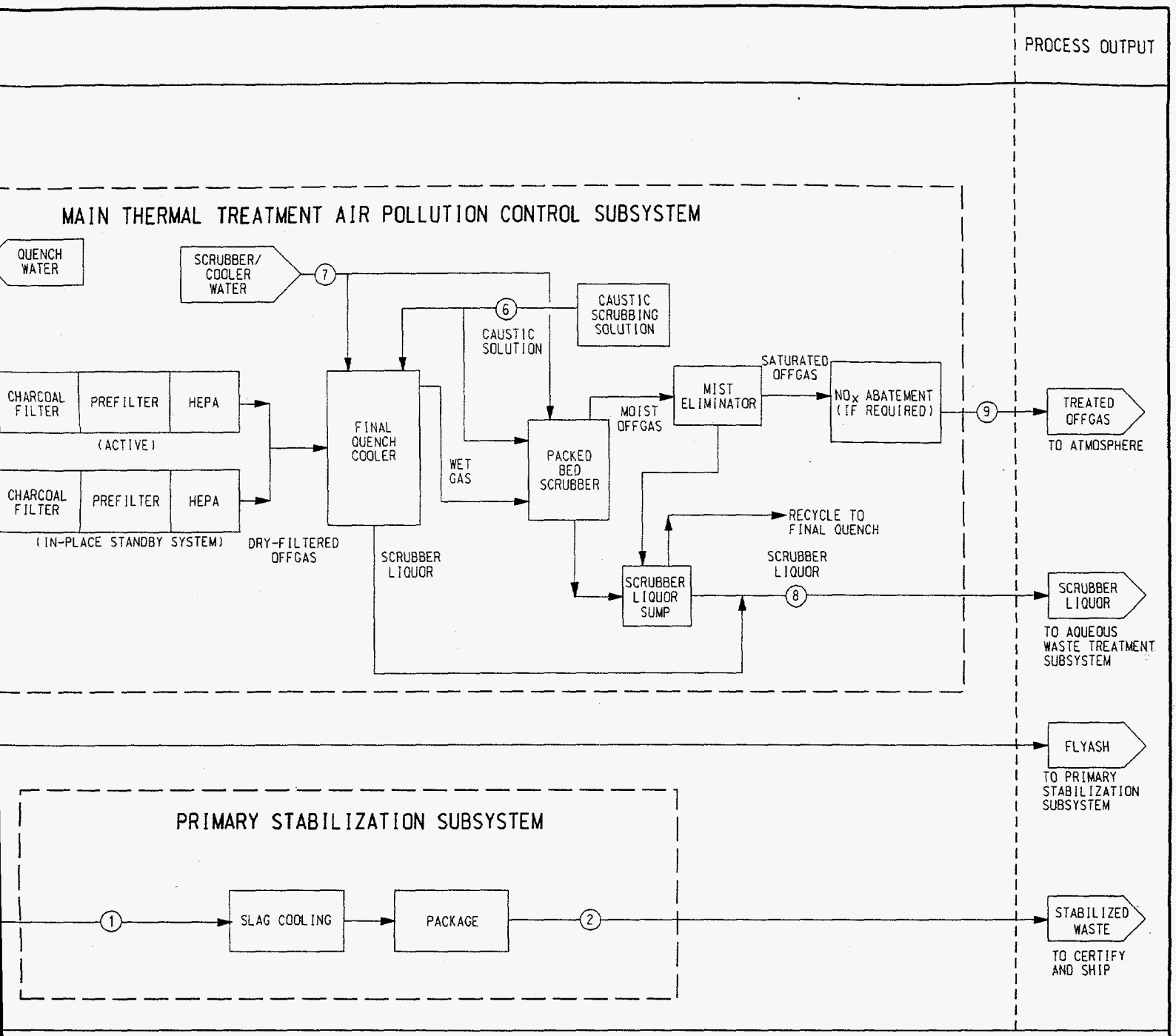

3 GEN	4 SCC OFFGAS	5 INFILTRATION AIR	6 PYROLYZER SOLIDS	7 ADDITIVE SOIL (SEE NOTE 2)	8 VITRIFIER SLAG	9 ORGANIC LIQUIDS	10 VITRIFIER OXYGEN	11 VITRIFIER OFFGAS
24	2,397	224	96	498	1,495	51	23	485
9 ED AS	4 FILTERED OFFGAS	5 FLYASH	6 CAUSTIC SOLUTION	7 SCRUBBER/ COOLER WATER	8 SCRUBBER LIQUOR	9 TREATED OFFGAS		
08	3,785	23	156	2,181	4,683	1,433		

FILENAME: 0527F22.DGN PLOT DATE: 2/23/95

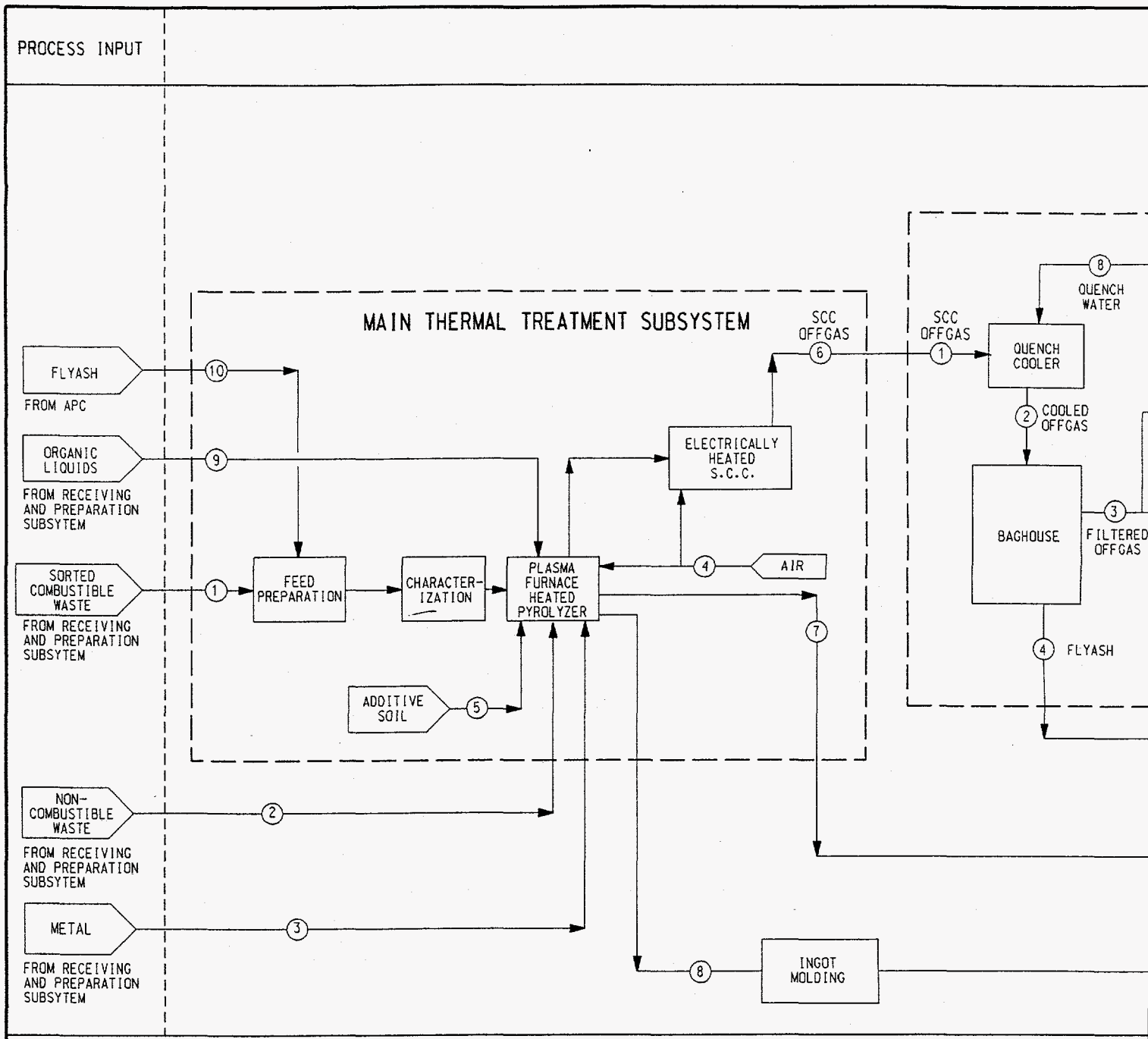

NOTES:
1. ADDITIVE SOIL = 50% OF THE FEED TO PRIMARY STABILIZATION.
2. TRACE METALS REMOVED FROM OFFGAS IN THE AIR POLLUTION CONTROL SUBSYSTEM ARE ROUTED TO SECONDARY STABILIZATION AND NOT SHOWN ABOVE.

PRIMARY STABILIZATION SUBSYSTEM	1 SLAG	2 PACKAGED SLAG		
FLOW RATE (LB/HR)	1,450	1,450		
MAIN THERMAL TREATMENT SUBSYSTEM	1 SORTED COMBUSTIBLE WASTE	2 NON-COMBUSTIBLE WASTE	3 METAL	
FLOW RATE (LB/HR)	609	1,340	149	6.
MAIN THERMAL TREATMENT AIR POLLUTION CONTROL SUBSYSTEM	1 SCC OFFGAS	2 COOLED OFFGAS	3 FILTERED OFFGAS	FL
FLOW RATE (LB/HR)	7,339	10,888	10,800	

Figure 4-7. Plasma Furnace: PFD for Incineration, Air Pollution Control, and Primary Stabilization Subsystems (System C-1).

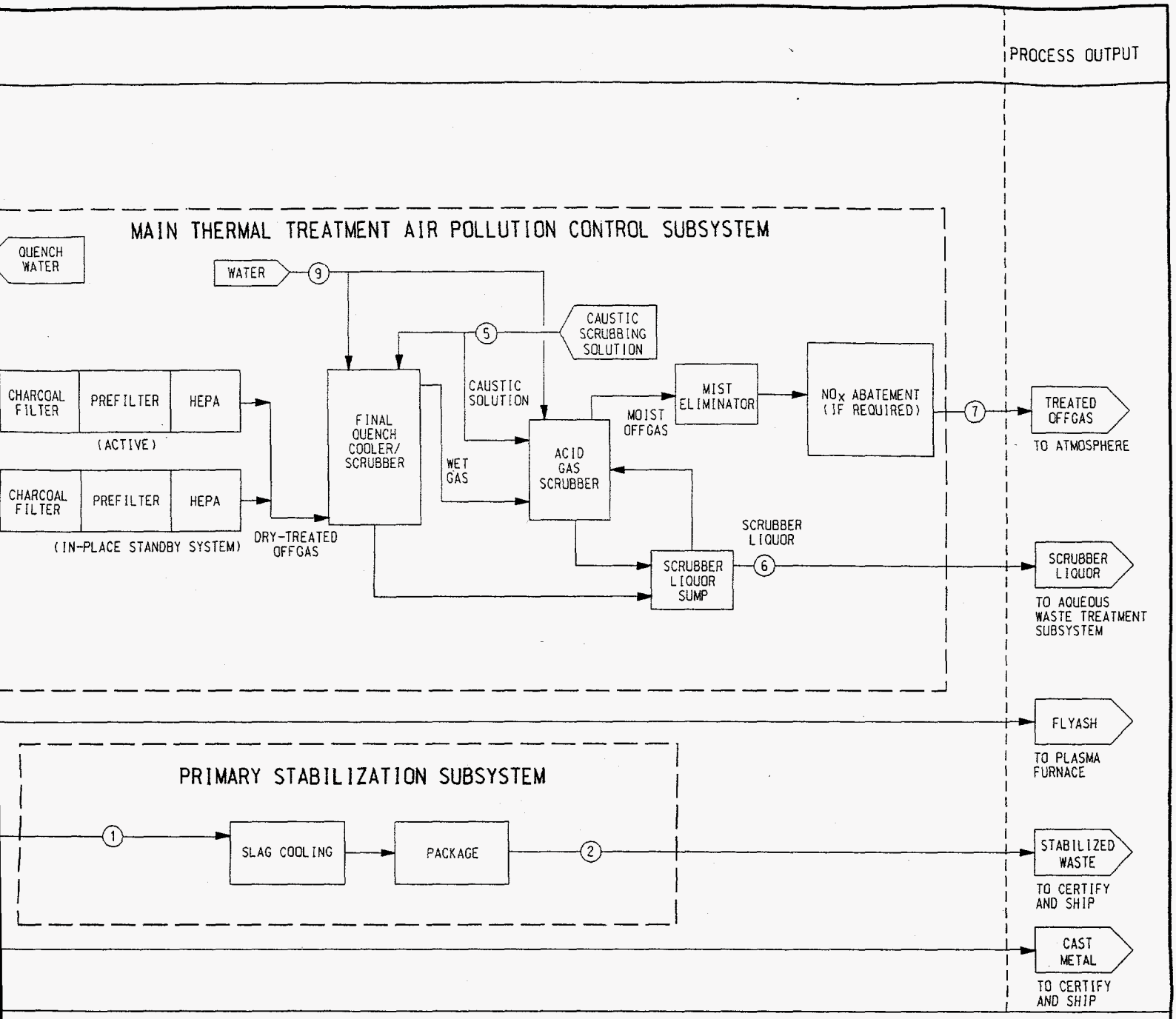

5 ADDITIVE SOIL (SEE NOTE 1)	6 SCC OFFGAS	7 SLAG	8 CAST METAL	9 ORGANIC LIQUIDS	10 FLYASH			
482	7,339	1,450	170	51	88			
5 CAUSTIC SOLUTION (50% NaOH)	6 SCRUBBER LIQUOR	7 TREATED OFFGAS	8 QUENCH WATER	9 SCRUBBER/ COOLER WATER				
156	6,371	6,762	3,549	2,181				

FILENAME: 0527F32.DGN PLOT DATE: 2/23/95

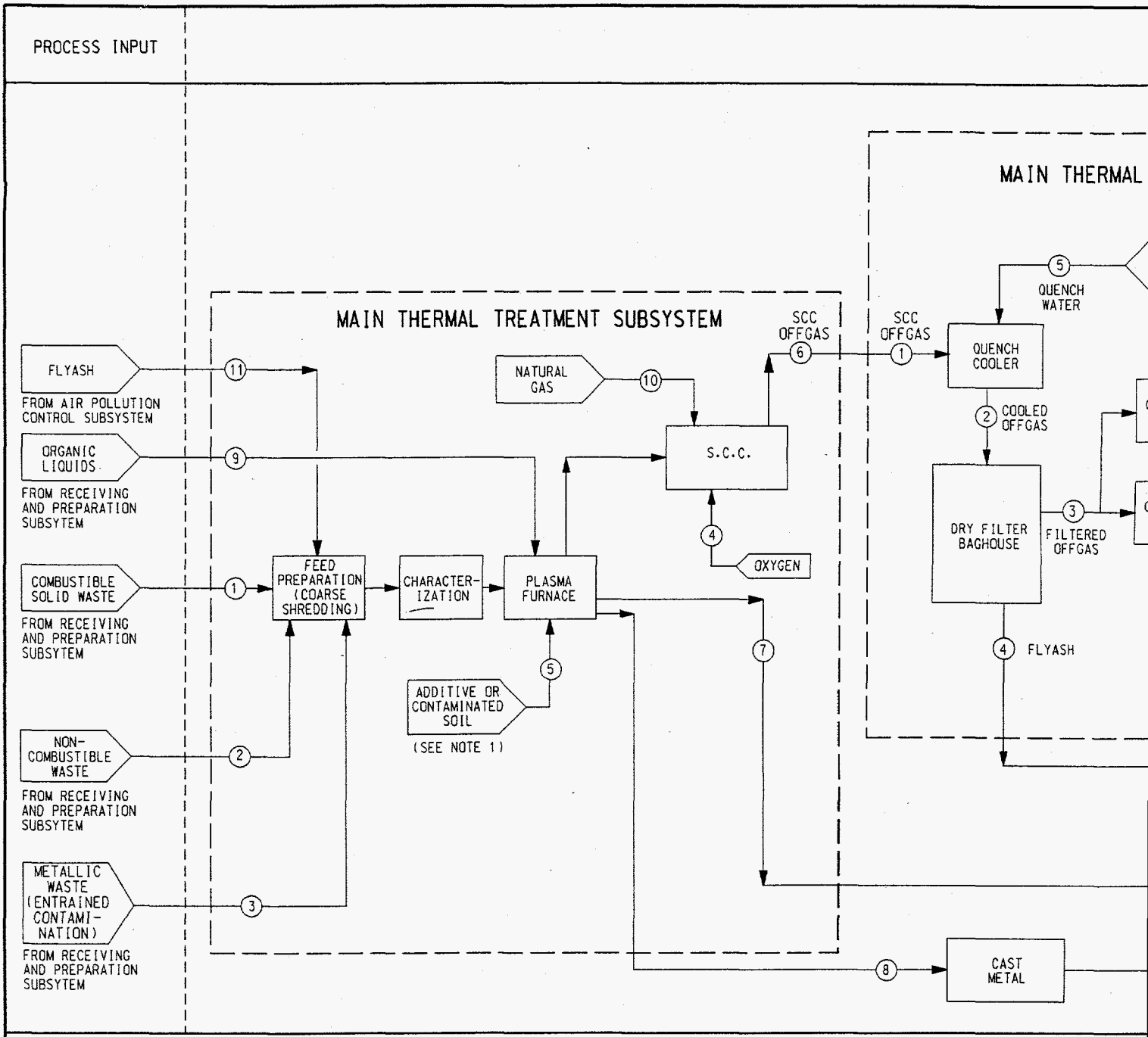

NOTES:

1. ADDITIVE OR CONTAMINATED SOIL = 50% OF THE FEED TO PRIMARY STABILIZATION.
2. 90% OF RECOVERED LIME IS RECYCLED TO THE ABSORBER. 10% OF RECOVERED LIME IS SENT TO THE DRY SCRUBBER OR TO SECONDARY STABILIZATION.
3. TRACE METALS REMOVED FROM OFFGAS IN THE AIR POLLUTION CONTROL SUBSYSTEM ARE ROUTED TO SECONDARY STABILIZATION AND NOT SHOWN ABOVE.

PRIMARY STABILIZATION SUBSYSTEM	1 SLAG	2 PACKAGED SLAG	
FLOW RATE (LB/HR)	1,450	1,450	
MAIN THERMAL TREATMENT SUBSYSTEM	1 COMBUSTIBLE SOLID WASTE	2 NON-COMBUSTIBLE WASTE	3 METALLIC WASTE (ENTRAINED CONTAMINATION)
FLOW RATE (LB/HR)	609	1,340	149
MAIN THERMAL TREATMENT AIR POLLUTION CONTROL SUBSYSTEM	1 SCC OFFGAS	2 COOLED OFFGAS	3 FILTERED OFFGAS
FLOW RATE (LB/HR)	3,039	4,772	4,684

Figure 4-8. Plasma Furnace, CO_2 Retention: PFD for Main Thermal Treatment, Air Pollution Control, and Primary Stabilization

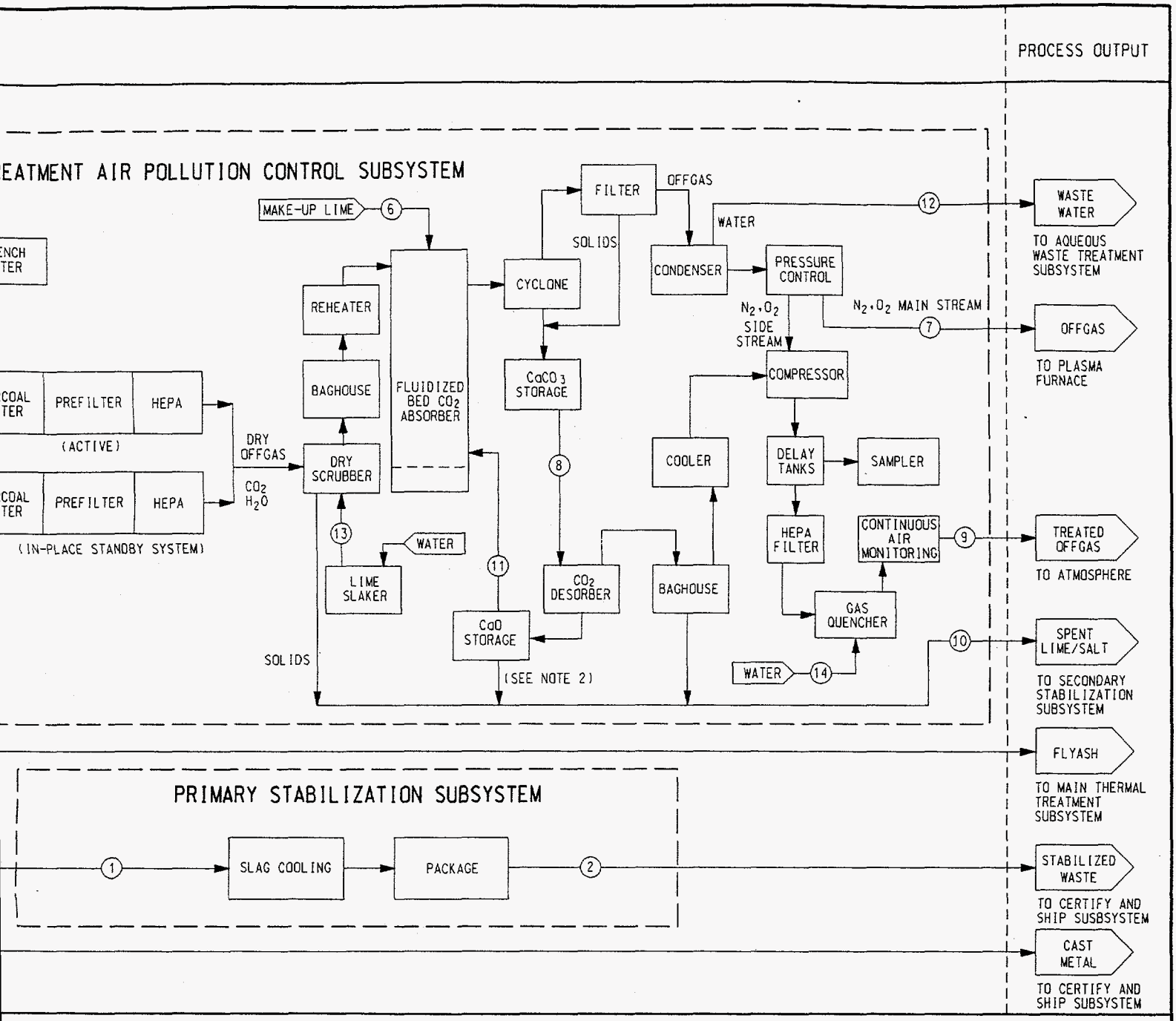

4 YGEN	5 ADDITIVE OR CONTAMINATED SOIL	6 SCC OFFGAS	7 SLAG	8 CAST METAL	9 ORGANIC LIQUIDS	10 NATURAL GAS	11 FLYASH			
225	482	3.039	1,450	170	51	210	88			
4 ASH	5 QUENCH WATER	6 MAKE-UP LIME	7 SCRUBBED OFFGAS	8 $CACO_3$	9 TREATED OFFGAS	10 SPENT LIME/ SALT	11 RECYCLE LIME (SEE NOTE 2)	12 WASTE WATER	13 RECYCLED LIME	14 WATER
8	1,732	173	505	3,078	1,836	233	1,554	2,710	57	427

bsystems (System C-2).

FILENAME: PFD-B37.DGN PLOT DATE: 02/22/95

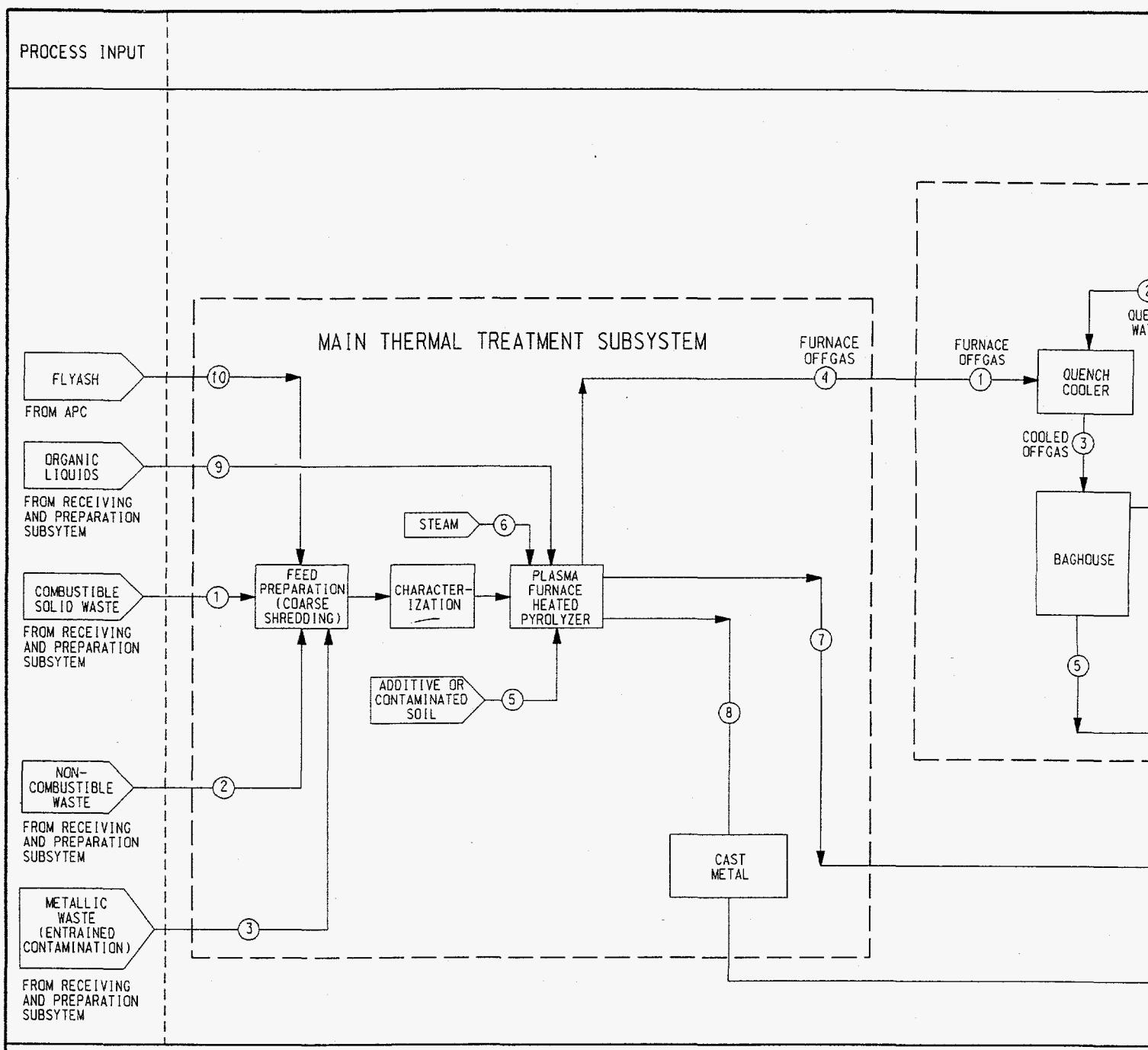

NOTE:

1. ADDITIVE OR CONTAMINATED SOIL = 50% OF THE FEED TO PRIMARY STABILIZATION.
2. TRACE METALS REMOVED FROM OFFGAS IN THE AIR POLLUTION CONTROL SUBSYSTEM ARE ROUTED TO SECONDARY STABILIZATION AND NOT SHOWN ABOVE.

PRIMARY STABILIZATION SUBSYSTEM	1 SLAG	2 PACKAGED SLAG		
FLOW RATE (LB/HR)	1,452	1,452		
MAIN THERMAL TREATMENT SUBSYSTEM	1 COMBUSTIBLE SOLID WASTE	2 NON-COMBUSTIBLE WASTE	3 METAL	OF
FLOW RATE (LB/HR)	609	1,340	149	1
MAIN THERMAL TREATMENT AIR POLLUTION CONTROL SUBSYSTEM	1 FURNACE OFFGAS	2 QUENCH WATER	3 COOLED OFFGAS	FIL OF
FLOW RATE (LB/HR)	1,159	1,189	2,348	2,

Figure 4-9. Plasma Gasification: PFD for Main Thermal Treatment, Air Pollution Control, and Primary Stabilization Subsystem

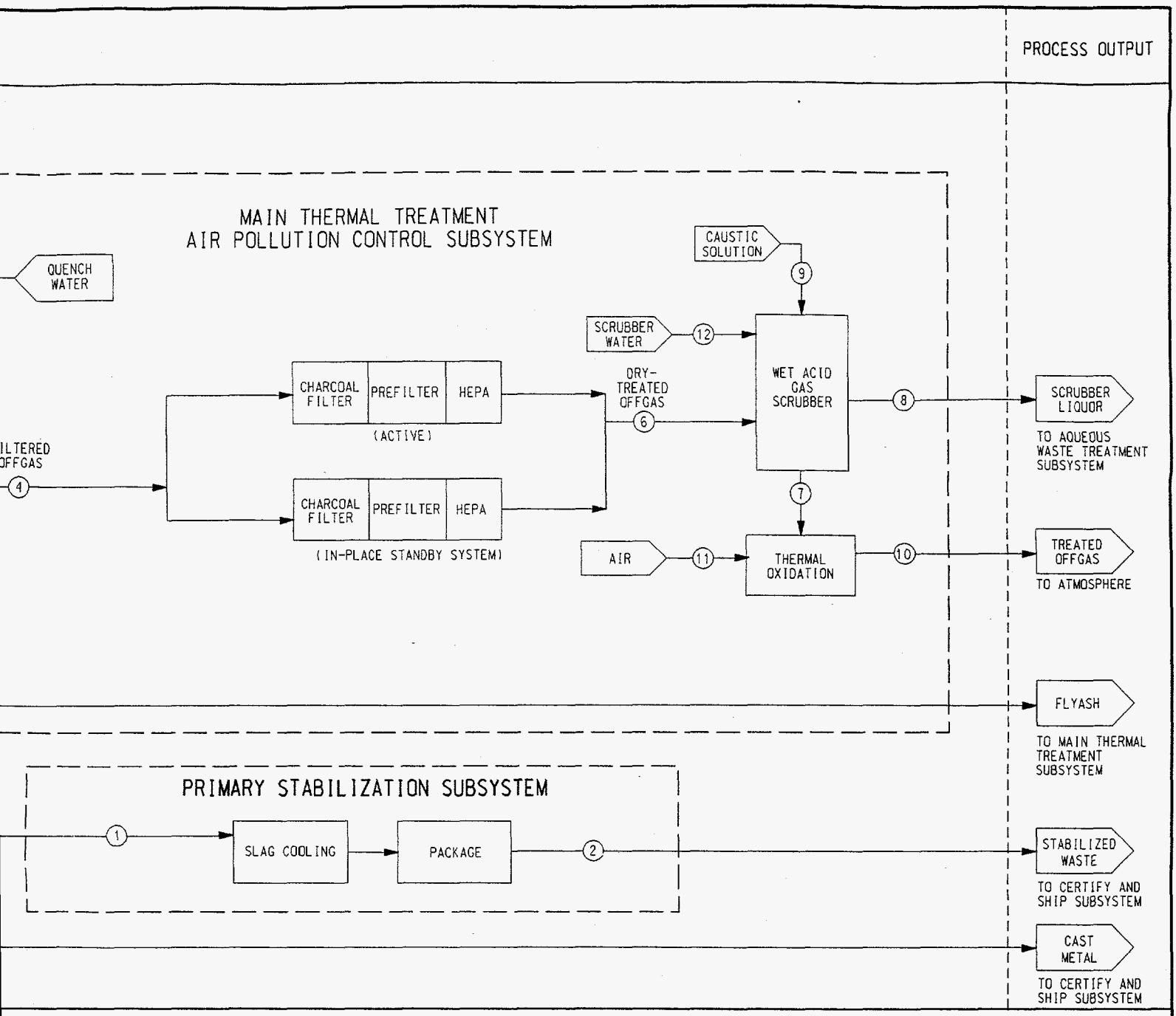

S	5 ADDITIVE SOIL (SEE NOTE)	6 STEAM	7 SLAG	8 CAST METAL	9 ORGANIC LIQUIDS	10 FLYASH		
9	484	60	1,452	170	51	88		
D	5 FLY ASH	6 DRY-TREATED OFFGAS	7 SCRUBBED OFFGAS	8 SCRUBBED LIQUOR	9 CAUSTIC SOLUTION (50% SOLUTION)	10 TREATED OFFGAS	11 AIR	12 SCRUBBER WATER
	88	2,256	1,632	2,960	156	11,886	10,254	2,181

System C-3).

FILENAME: PFD-PF.DGN PLOT DATE: 02/22/95

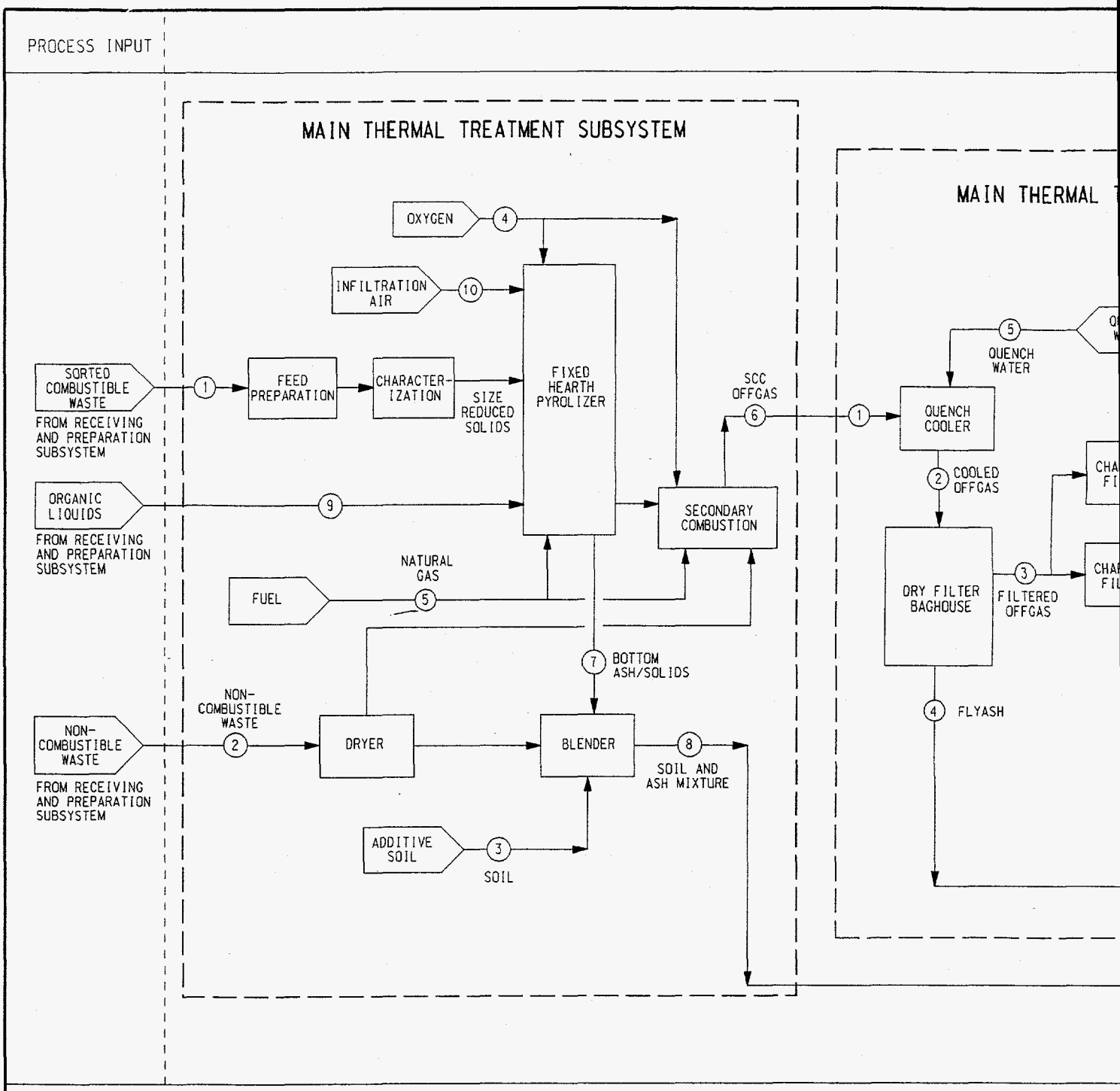

NOTES:

1. 10% OF LIME IS DUMPED TO STABILIZATION.
2. 90% OF LIME IS RECYCLED.
3. ADDITIVE SOIL = 50% OF THE FEED TO PRIMARY STABILIZATION.
4. TRACE METALS REMOVED FROM OFFGAS IN THE AIR POLLUTION CONTROL SUBSYSTEM ARE ROUTED TO SECONDARY STABILIZATION AND NOT SHOWN ABOVE.

MAIN THERMAL TREATMENT SUBSYSTEM	1 COMBUSTIBLE WASTE	2 NON-COMBUSTIBLE WASTE	3 ADDITIVE SOIL (SEE NOTE 3)	4 OXYGEN	5 NATURAL GAS	C
FLOW RATE (LB/HR)	660	1,340	499	1,130	1	
MAIN THERMAL TREATMENT AIR POLLUTION CONTROL SUBSYSTEM	1 SCC OFFGAS	2 COOLED OFFGAS	3 FILTERED OFFGAS	4 FLYASH	5 QUENCH WATER	M
FLOW RATE (LB/HR)	6,196	10,421	10,397	24	4,225	

Figure 4-10. System D, Fixed Hearth with CO_2 Retention: PFD for Incineration and Air Pollution Control Subsystems (Syste

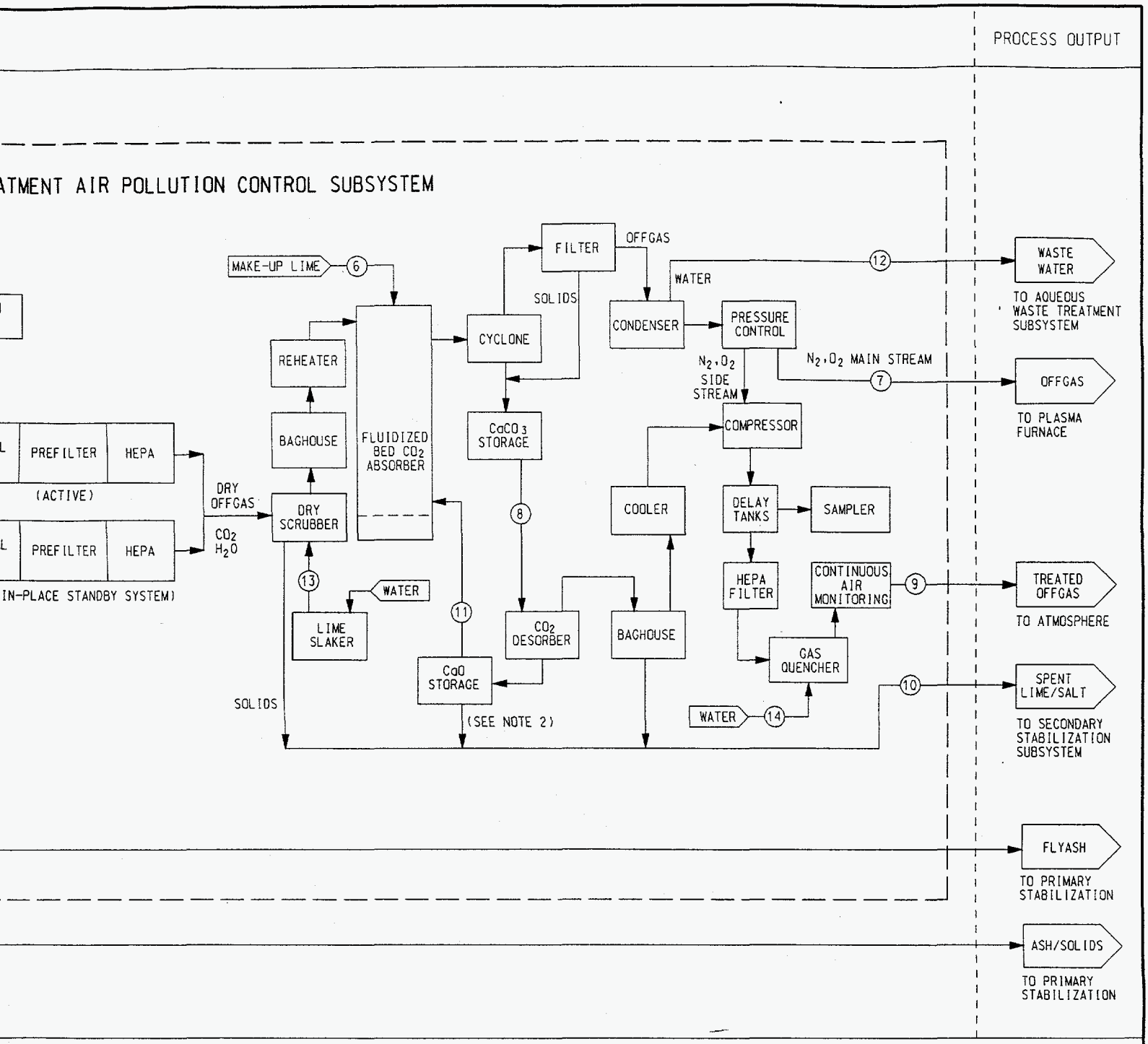

C AS	7 ASH/SOLIDS	8 SOIL AND ASH MIXTURE	9 ORGANIC LIQUIDS	10 INFILTRATION AIR				
96	96	1,496	51	224				
UP E	7 SCRUBBED OFFGAS	8 $CACO_3$	9 TREATED OFFGAS	10 SPENT/SALT LIME	11 RECYCLED LIME (SEE NOTE 1)	12 WASTE WATER	13 RECYCLED LIME	14 WATER
8	1,667	2,829	1,822	219	1,426	7,241	57	393

D-1).

FILENAME: 0527F42.DGN PLOT DATE: 02/22/95

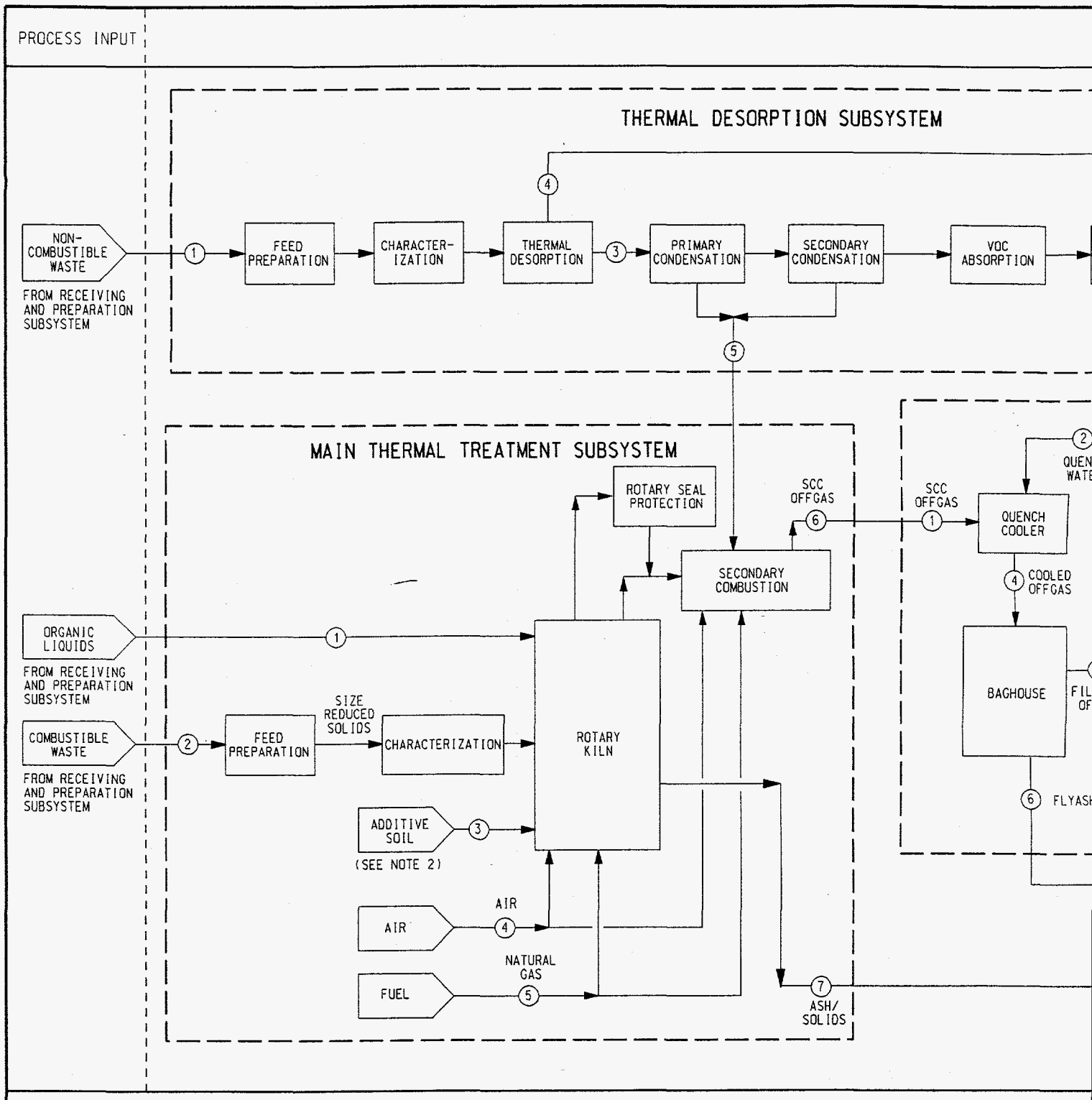

NOTES:

1. ASSUME GROUT TO WASTE RATES:2 TO 1
2. ADDITIVE SOIL = 50% OF THE FEED TO PRIMARY STABILIZATION.
3. TRACE METALS REMOVED FROM OFFGAS IN THE AIR POLLUTION CONTROL SUBSYSTEM ARE ROUTED TO SECONDARY STABILIZATION AND NOT SHOWN ABOVE.

THERMAL DESORPTION SUBSYSTEM	1 NON-COMBUSTIBLE WASTE	2 TREATED OFFGAS	3 VOCs	4 DEBRIS TO GROUTING	5 ORGA LIQ
FLOW RATE (LB/HR)	1,340	NEGLIGIBLE	289	1,051	2
MAIN THERMAL TREATMENT AIR POLLUTION CONTROL SUBSYSTEM	1 SCC OFFGAS	2 QUENCH WATER	3 SCRUBBER/ COOLER WATER	4 COOLED OFFGAS	5 FILT OFF
FLOW RATE (LB/HR)	21,531	10,407	1,800	31,938	31,

Figure 4-11. Thermal Desorption: PFD for Incineration, Thermal Desorber, and Air Pollution Control Subsystems (System E-1)

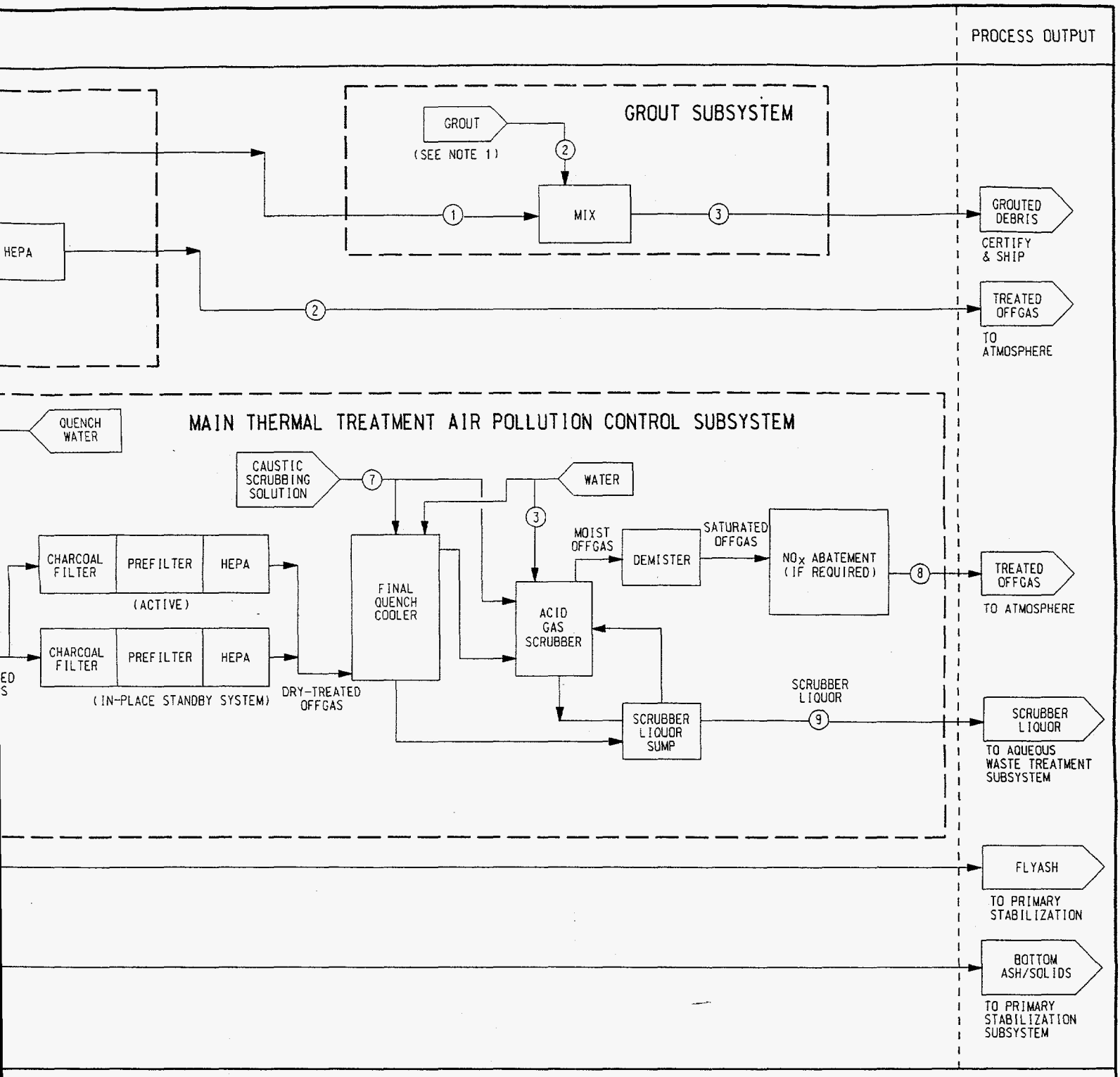

	MAIN THERMAL TREATMENTSUBSYSTEM		1 ORGANIC LIQUIDS	2 COMBUSTIBLE WASTE	3 ADDITIVE SOIL (SEE NOTE 2)	4 AIR	5 NATURAL GAS	6 SCC OFFGAS	7 ASH/SOLIDS	
			51	609	54	7,766	9,286	21,531	129	
D	6 FLYASH	7 CAUSTIC SOLUTION (50% NaOH)	8 TREATED OFFGAS	9 SCRUBBER LIQUOR		GROUT SUBSYSTEM		1 DEBRIS	2 GROUT	3 GROUTED WASTE
	32	128	20,267	13,566				1,051	2,102	3,969

FILENAME:0527F52.DGN PLOT DATE: 02/22/95

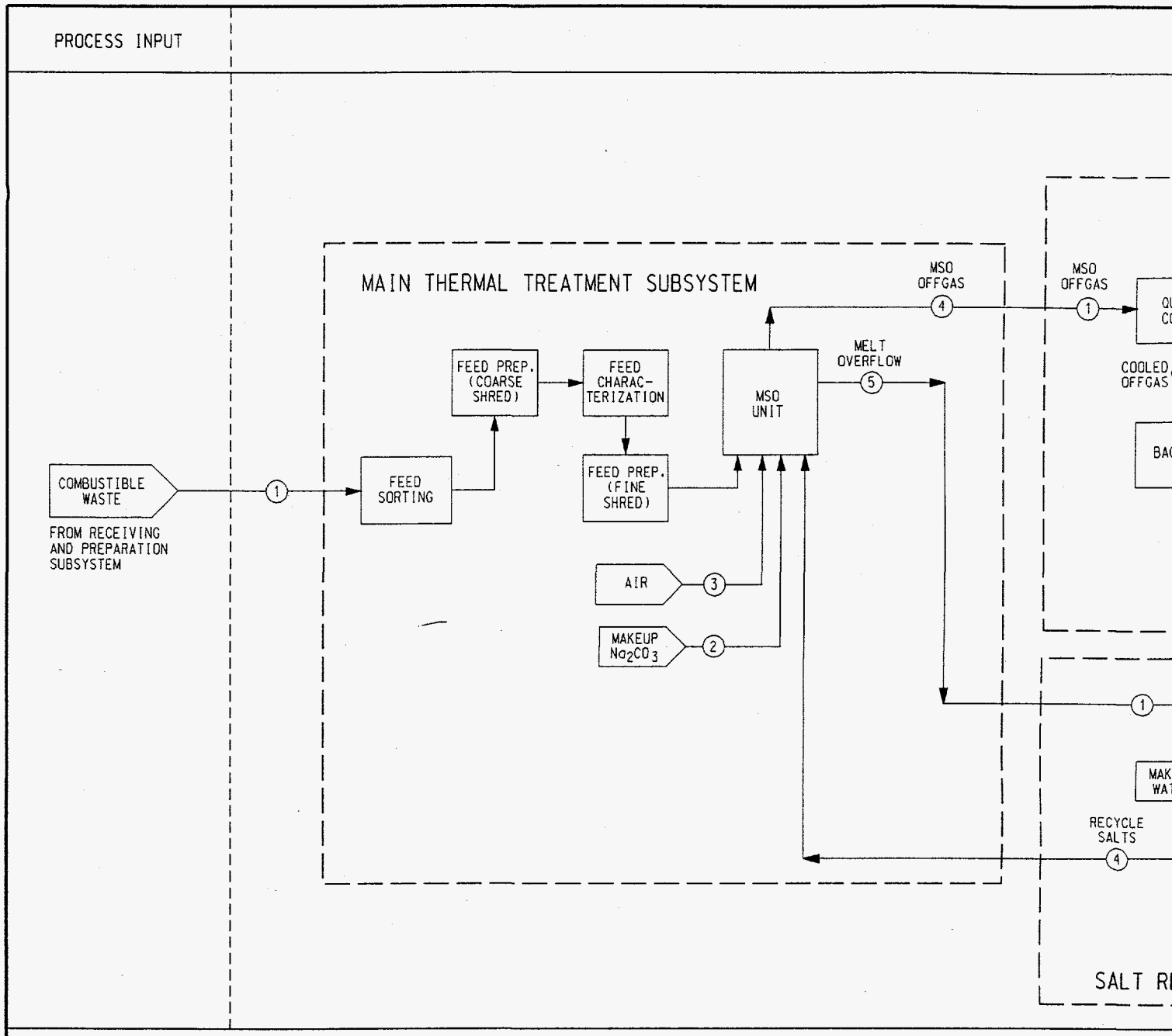

NOTE: TRACE METALS REMOVED FROM OFFGAS IN THE AIR POLLUTION CONTROL SUBSYSTEM ARE ROUTED TO SECONDARY STABILIZATION AND NOT SHOWN ABOVE.

MAIN THERMAL TREATMENT SUBSYSTEM	1 COMBUSTIBLE WASTE	2 MAKEUP SODIUM CARBONATE	3 AIR	
FLOW RATE (LB/HR)	660	121	6,120	
SALT RECYCLE SUBSYSTEM	1 MELT OVERFLOW	2 ASH	3 SALTS	RE
FLOW RATE (LB/HR)	607	121	127	
MAIN THERMAL TREATMENT AIR POLLUTION CONTROL SUBSYSTEM	1 MSO OFFGAS	2 QUENCH WATER	3 COOLED OFFGAS	FI
FLOW RATE (LB/HR)	6,653	2,114	8,767	

Figure 4-12. Molten Salt Oxidation: PFD for Main Thermal Treatment, Air Pollution Control, and Salt Recycling Subsystems (

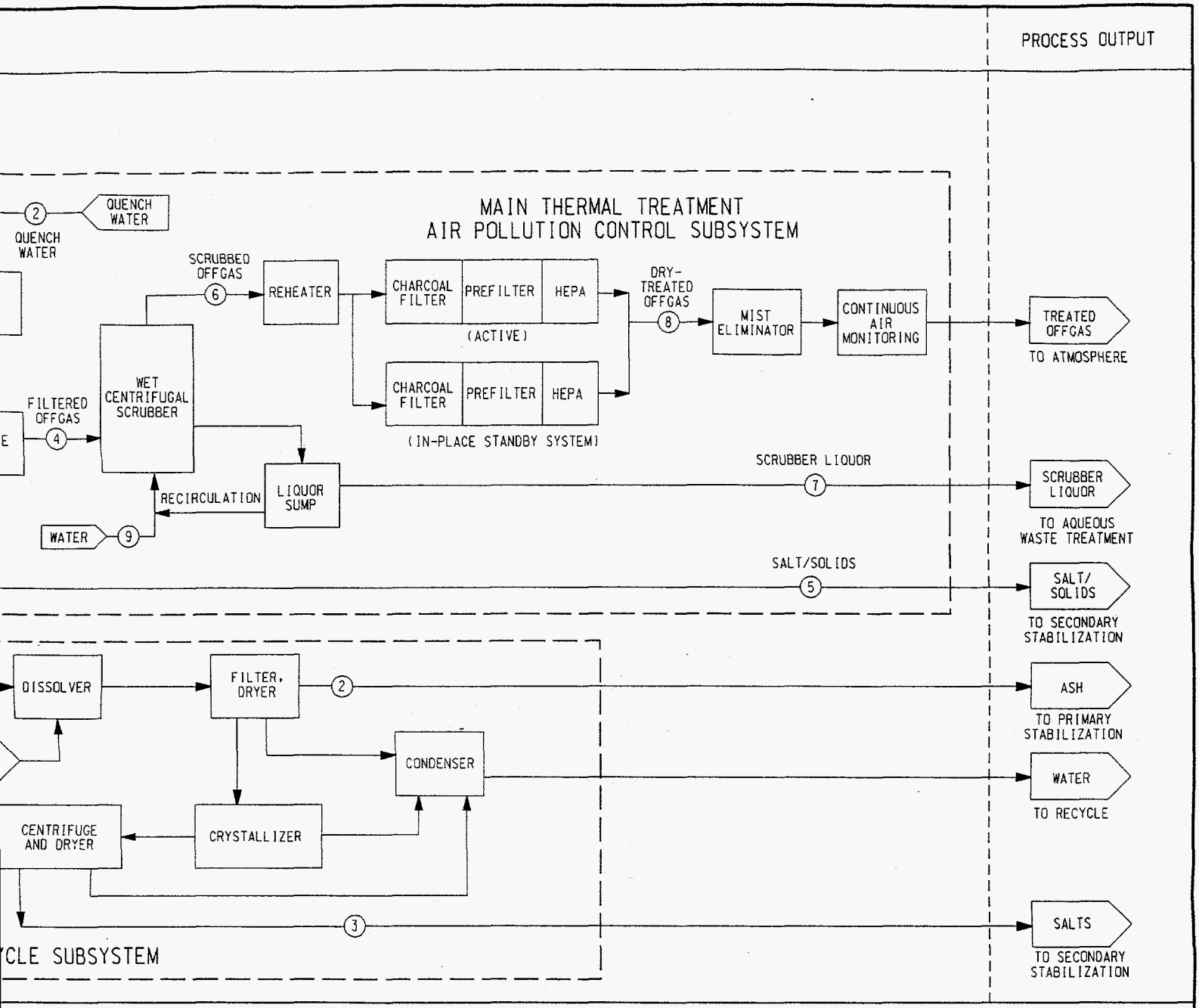

AS	5 MELT OVERFLOW					
53	607					
LED S						
RED AS	5 FLY ASH	6 SCRUBBED OFFGAS	7 SCRUBBER LIQUOR	8 DRY-TREATED OFFGAS	9 SCRUBBER WATER	
56	NEGLIGIBLE	6.645	2.122	6.645	4	

tem F-1).

FILENAME: D:/0527/PFD-WSO.DGN PLOT DATE: 08/04/95

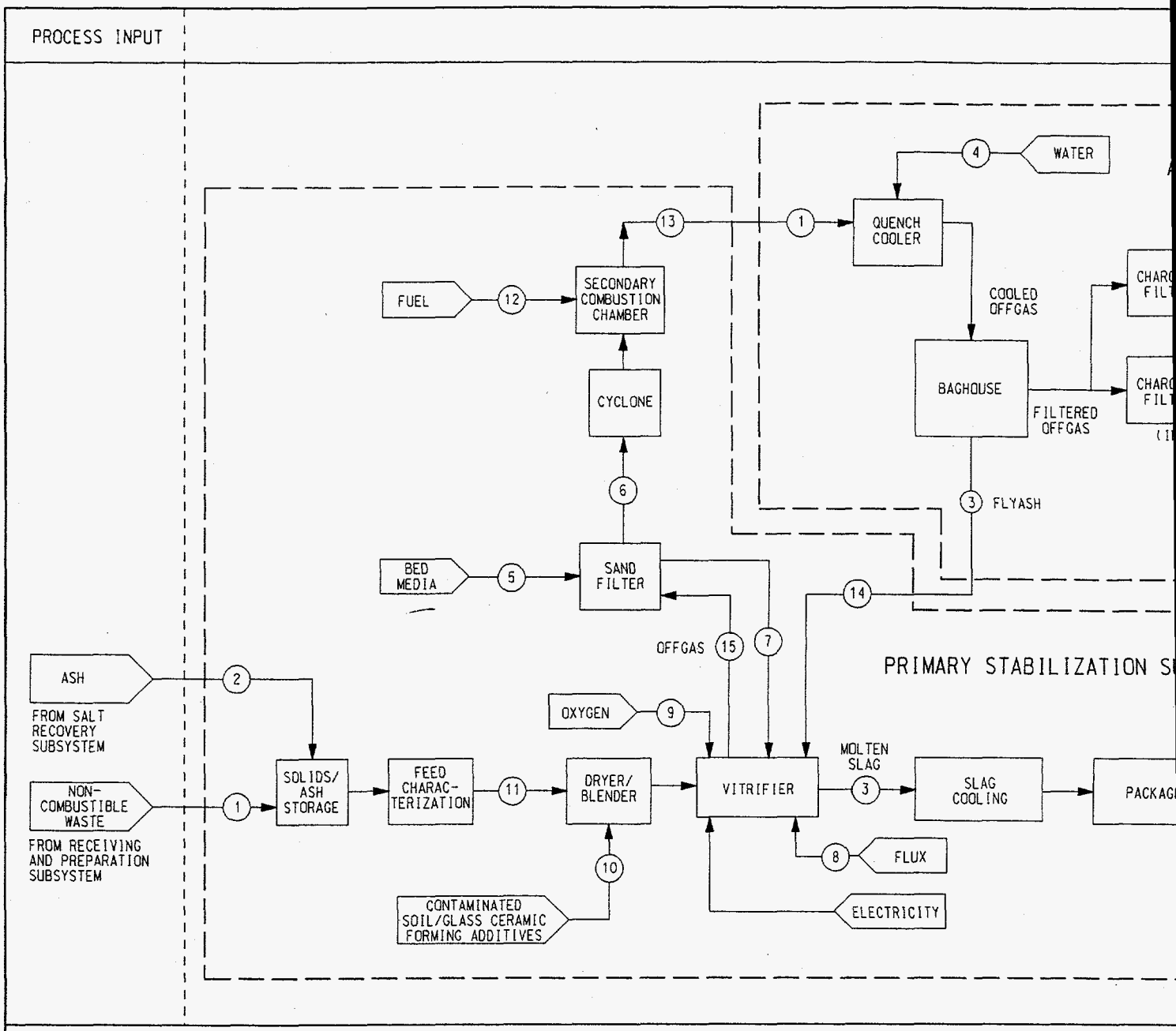

NOTE: TRACE METALS REMOVED FROM OFFGAS IN THE AIR POLLUTION CONTROL SUBSYSTEM ARE ROUTED TO SECONDARY STABILIZATION AND NOT SHOWN ABOVE.

PRIMARY STABILIZATION SUBSYSTEM	1 NON-COMBUSTIBLE WASTE AND ASH	2 ASH	3 MOLTEN SLAG	4 STABILIZED WASTE	5 BED MEDIA
FLOW RATE (LB/HR)	1,340	121	1,500	1,500	NEGLIGIBL
PRIMARY STABILIZATION AIR POLLUTION CONTROL SUBSYSTEM	1 SCC OFFGAS	2 TREATED OFFGAS	3 FLY ASH	4 QUENCH WATER	5 SCRUBBER LIQUOR
FLOW RATE (LB/HR)	1,074	549	79	659	1,615

Figure 4-13. Molten Salt Oxidation: PFD for Primary Stabilization Subsystem (System F-1).

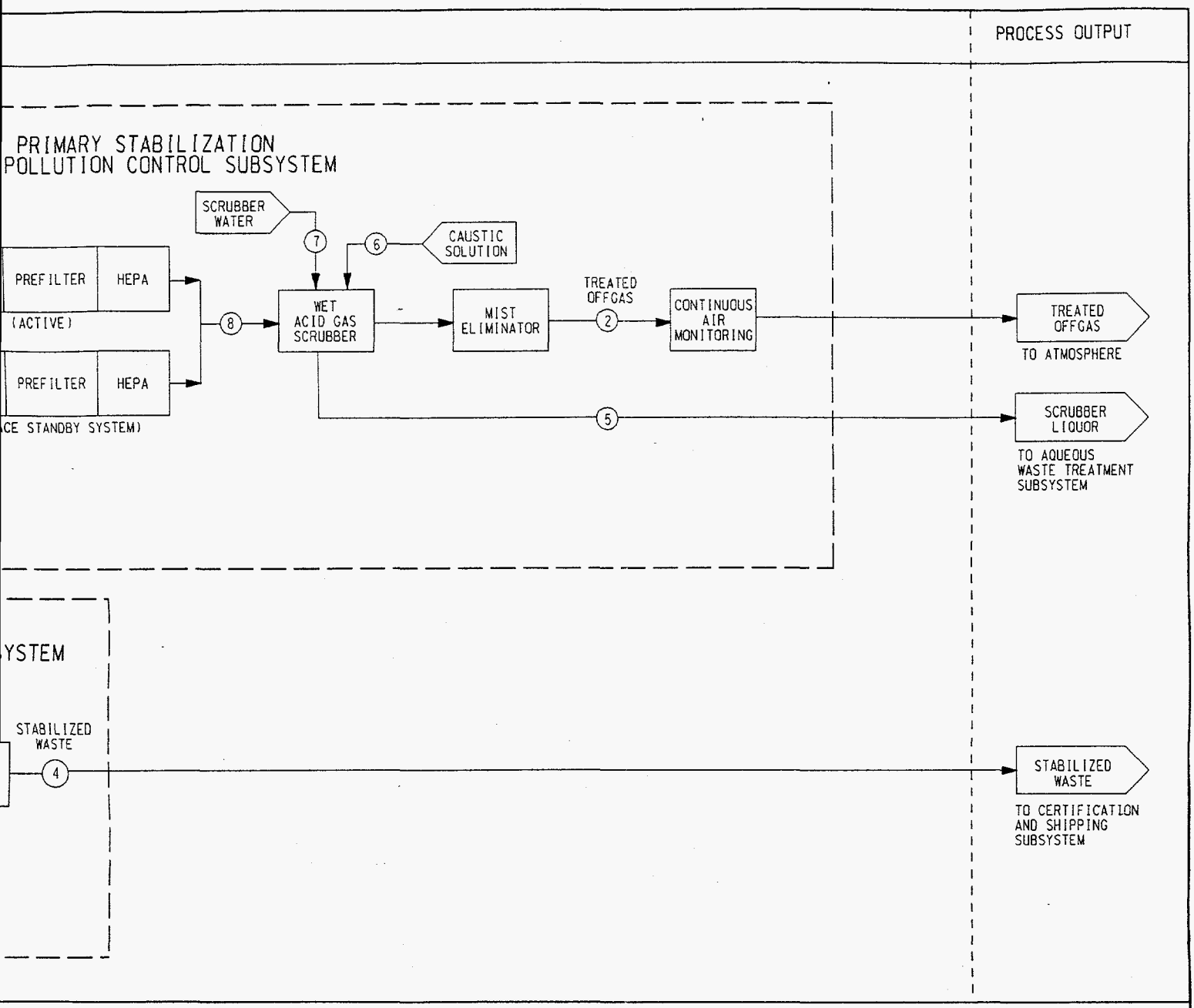

6 OFFGAS	7 SPENT BED MEDIA	8 FLUX	9 OXYGEN	10 CONTAMINATED SOIL/GLASS CERAMIC FORMING ADDITIVES	11 VITRIFIER FEED	12 FUEL	13 SCC OFFGAS	14 FLY ASH	15 OFFGAS
554	NEGLIGIBLE	NEGLIGIBLE	15	500	1,461	520	1,074	79	554

6 CAUSTIC SOLUTION (50% NaOH)	7 SCRUBBER WATER	8 FILTERED OFFGAS
34	477	1,654

FILENAME: 0527/PFD-PMSO.DGN PLOT DATE: 08/04/95

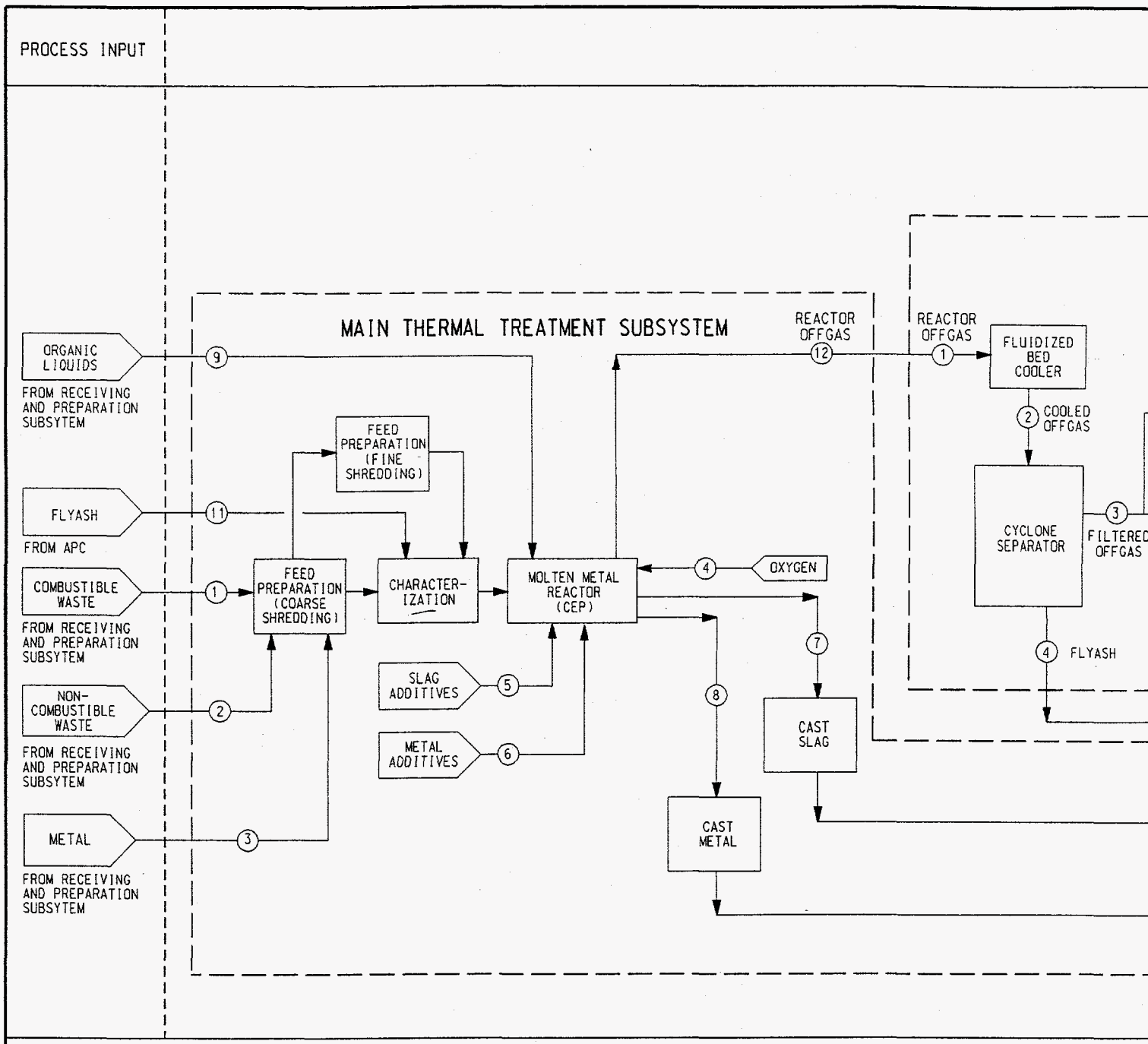

NOTE: TRACE METALS REMOVED FROM OFFGAS IN THE AIR POLLUTION CONTROL SUBSYSTEM ARE ROUTED TO SECONDARY STABILIZATION AND NOT SHOWN ABOVE.

MAIN THERMAL TREATMENT SUBSYSTEM	1 COMBUSTIBLE WASTE	2 NON-COMBUSTIBLE WASTE	3 METAL	4 OXYGEN	5 SLA ADDIT
FLOW RATE (LB/HR)	609	1,340	617	79	52
MAIN THERMAL TREATMENT AIR POLLUTION CONTROL SUBSYSTEM	1 REACTOR OFFGAS	2 COOLED OFFGAS	3 FILTERED OFFGAS	4 FLYASH	5 AI
FLOW RATE (LB/HR)	1,467	1,467	1,084	383	10,4

Figure 4-14. Molten Metal Waste Destruction: PFD for Main Thermal Treatment, Air Pollution Control, and Primary Stabiliza

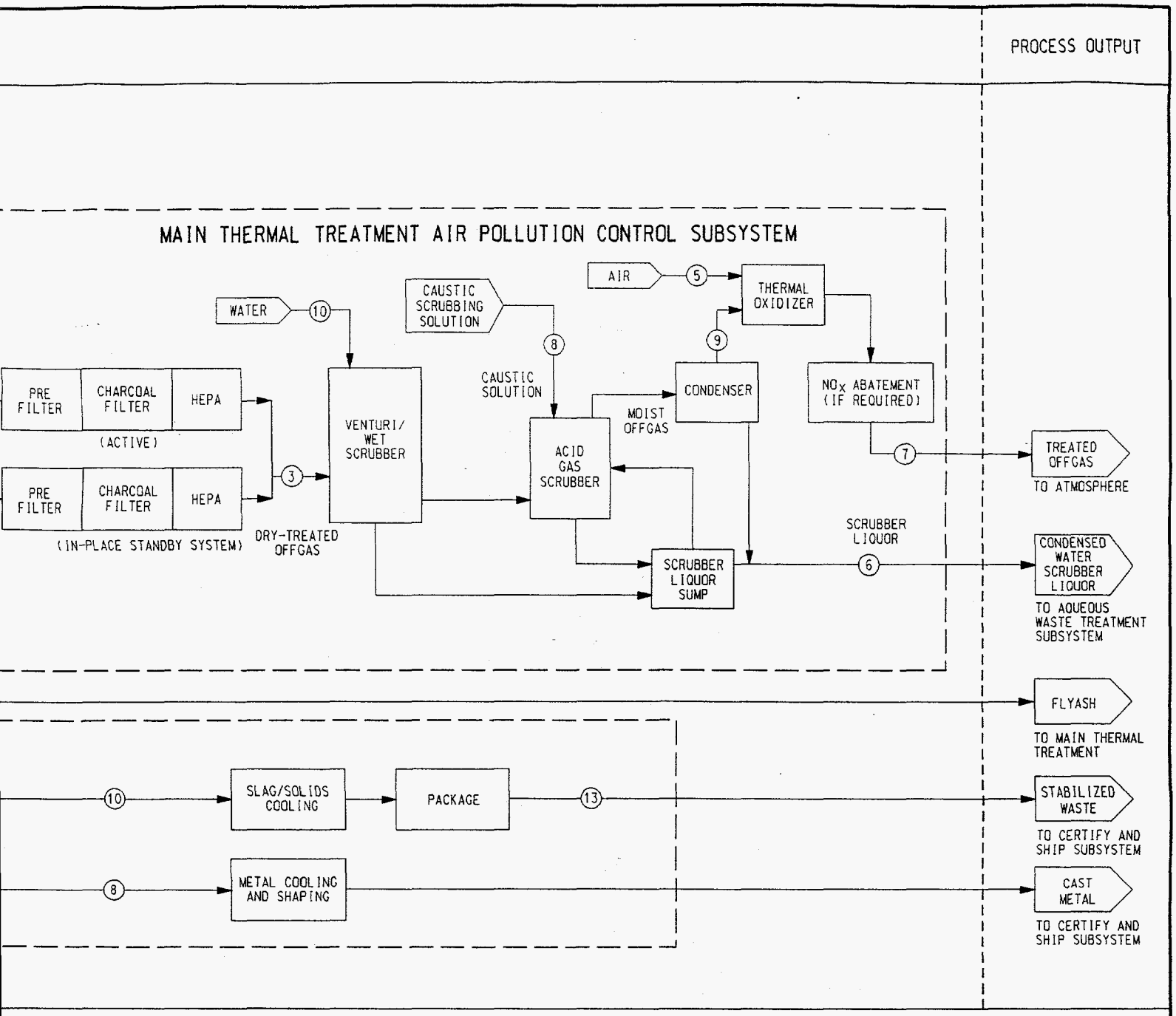

	6 METAL ADDITIVES	7 SLAG	8 CAST METAL	9 ORGANIC LIQUIDS	10 SLAG/ SOLIDS	11 FLYASH	12 REACTOR OFFGAS	13 PACKAGED SLAG/SOLIDS
	48	1,572	613	51	1,572	383	1,467	1,572
	6 CONDENSED WATER & SCRUBBER LIQUOR	7 TREATED OFFGAS	8 CAUSTIC SOLUTION (50% NaOH)	9 SCRUBBER OFFGAS	10 WATER			
	541	11,451	32	1,022	451			

n Subsystems (System G-1).

FILENAME: 0527/PFD-MMC.DGN PLOT DATE: 08/04/95

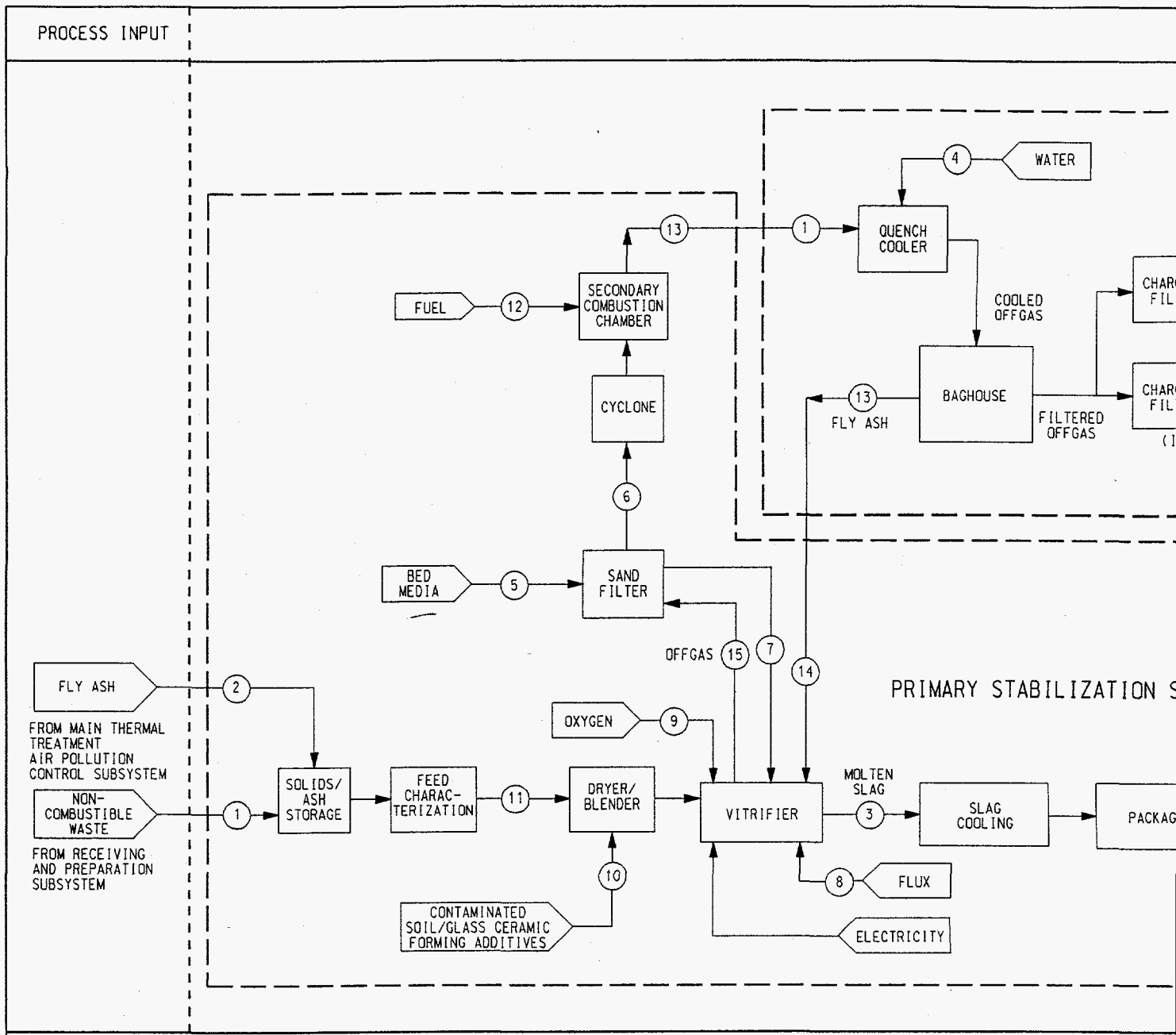

NOTE: TRACE METALS REMOVED FROM OFFGAS IN THE AIR POLLUTION CONTROL SUBSYSTEM ARE ROUTED TO SECONDARY STABILIZATION AND NOT SHOWN ABOVE.

PRIMARY STABILIZATION SUBSYSTEM	1 NON-COMBUSTIBLE WASTE	2 FLY ASH	3 MOLTEN SLAG	4 STABILIZED WASTE	5 BED MEDIA	6 OFF
FLOW RATE (LB/HR)	1,340	150	1,493	1,493	NEGLIGIBLE	69
PRIMARY STABILIZATION AIR POLLUTION CONTROL SUBSYSTEM	1 SCC OFFGAS	2 TREATED OFFGAS	3 FLY ASH	4 QUENCH WATER	5 SCRUBBER LIQUOR	6 CAUS SOLUT (50% N
FLOW RATE (LB/HR)	1,277	754	79	751	1,706	3

Figure 4-15. Steam Gasification: PFD for Primary Stabilization Subsystem (System H-1).

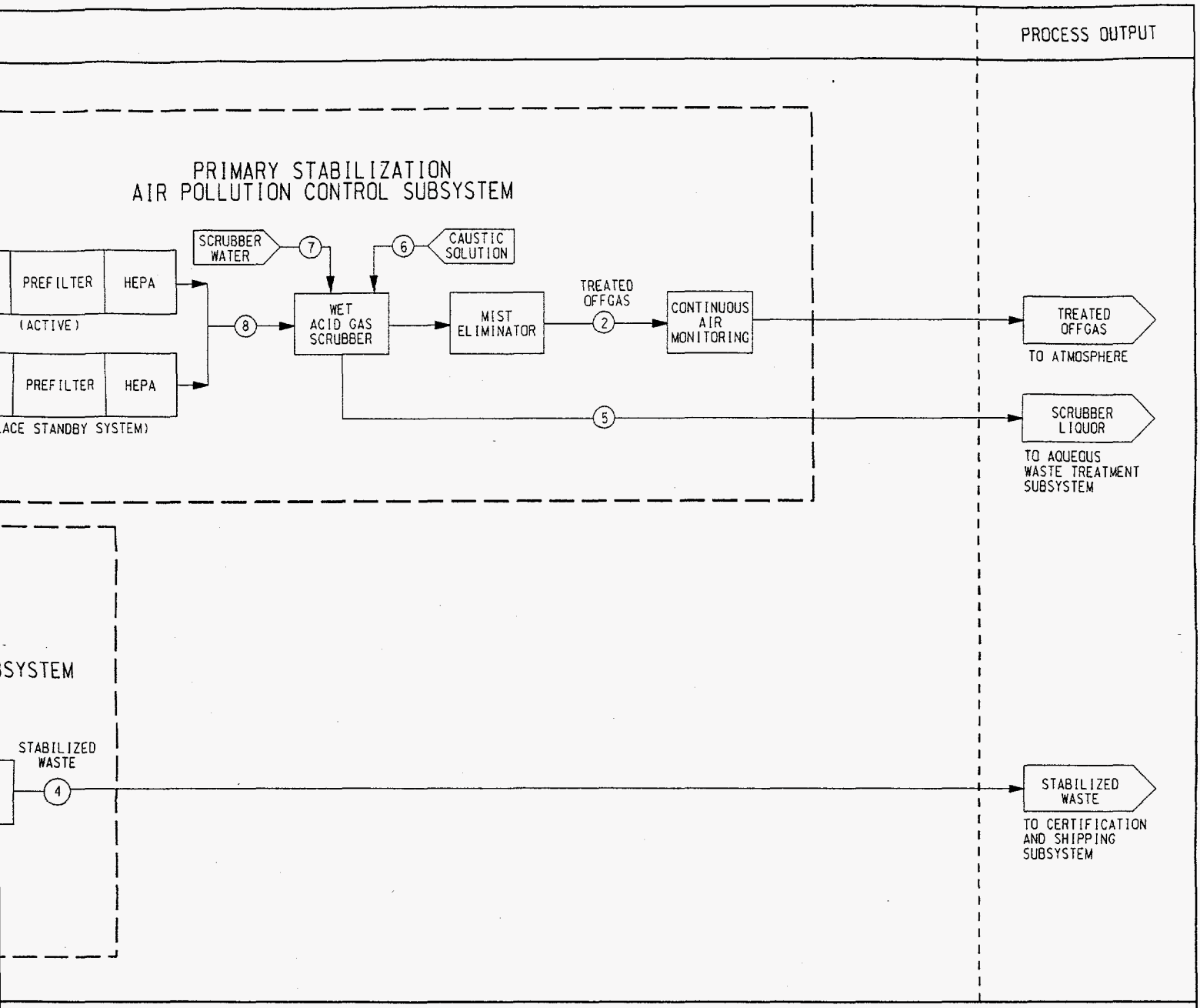

	7 SPENT BED MEDIA	8 FLUX	9 OXYGEN	10 CONTAMINATED SOIL/GLASS CERAMIC FORMING ADDITIVES	11 VITRIFIER FEED	12 FUEL	13 SCC OFFGAS	14 FLY ASH	15 OFFGAS
	NEGLIGIBLE	NEGLIGIBLE	118	498	1.490	586	1.277	79	691

	7 SCRUBBER WATER	8 FILTERED OFFGAS
)	477	1.949

FILENAME: 0527/PFD-PGAS.DGN PLOT DATE: 08/04/95

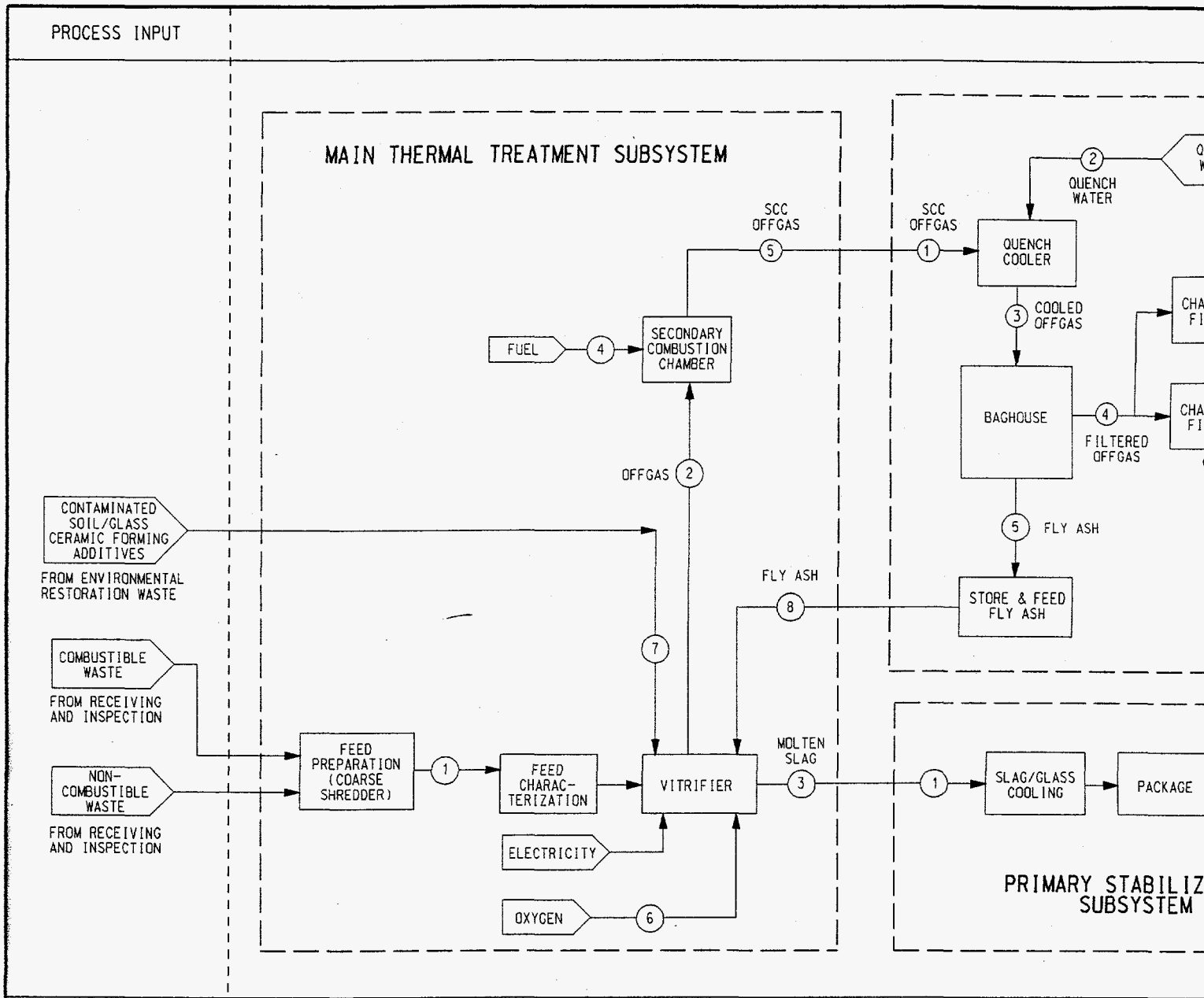

NOTE: TRACE METALS REMOVED FROM OFFGAS IN THE AIR POLLUTION CONTROL SUBSYSTEM ARE ROUTED TO SECONDARY STABILIZATION AND NOT SHOWN ABOVE.

MAIN THERMAL TREATMENT SUBSYSTEM	1 PREPARED WASTE FEED	2 OFFGAS	3 MOLTEN SLAG	4 FUEL	5 SCC OFFGAS	6 OXYGE
FLOW RATE (LB/HR)	2,000	2,497	1,494	1,742	4,239	1,4
MAIN THERMAL TREATMENT AIR POLLUTION CONTROL SUBSYSTEM	1 SCC OFFGAS	2 QUENCH WATER	3 COOLED OFFGAS	4 FILTERED OFFGAS	5 FLY ASH	6 CAUST SOLUTI (50% Nc
FLOW RATE (LB/HR)	4,239	2,293	6,523	6,449	79	154

Figure 4-16. Joule-heated Vitrification: PFD for Main Thermal Treatment, Air Pollution Control, and Primary Stabilization Subsy

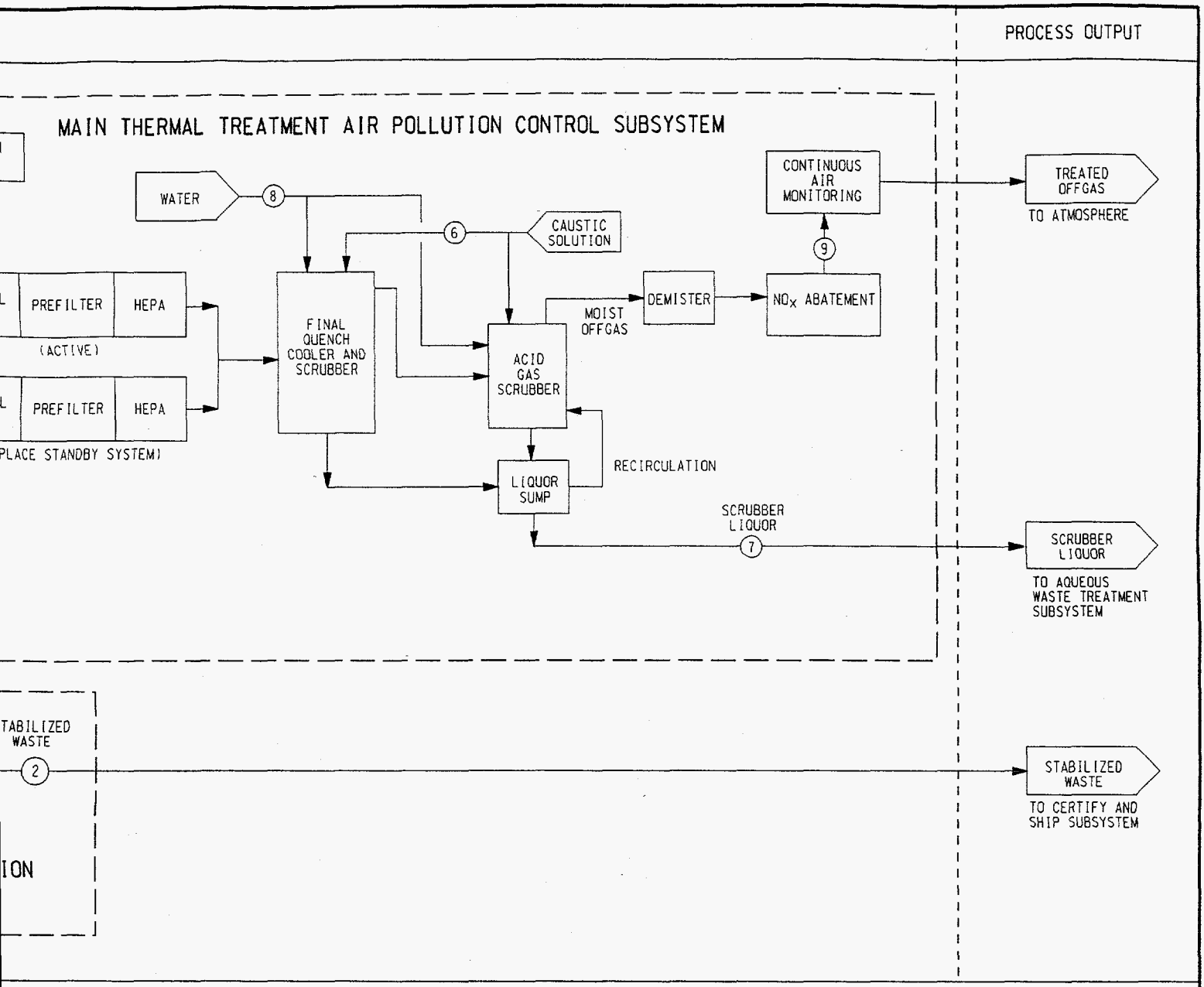

7 SOIL/GLASS ADDITIVE	8 FLY ASH						
498	79						
7 SCRUBBER LIQUOR	8 SCRUBBER/ COOLER WATER	9 TREATED OFFGAS		PRIMARY STABILIZATION SUBSYSTEM		1 SLAG/ GLASS	2 STABILIZED WASTE
5,583	2,177	3,197		FLOW RATE (LB/HR)		1,494	1,494

ms (System J-1).

FILENAME: PFD-JHV.DGN PLOT DATE: 08/04/95

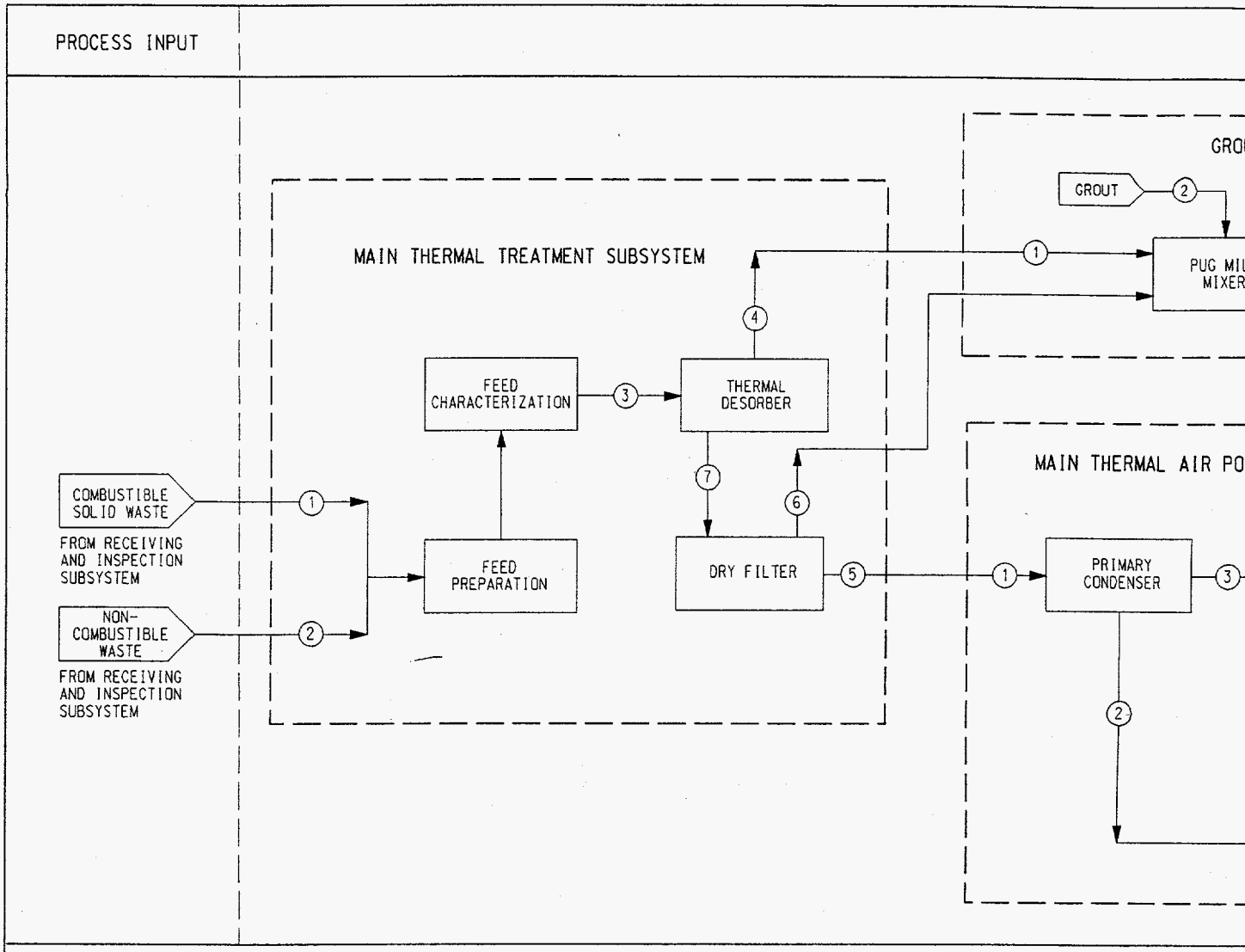

NOTE: TRACE METALS REMOVED FROM OFFGAS IN THE AIR POLLUTION CONTROL SUBSYSTEM ARE ROUTED TO SECONDARY STABILIZATION AND NOT SHOWN ABOVE.

MAIN THERMAL TREATMENT SUBSYSTEM	1 COMBUSTIBLE SOLID WASTE	2 NON-COMBUSTIBLE WASTE	FE
FLOW RATE (LB/HR)	609	1,340	1,9
AIR POLLUTION CONTROL SUBSYSTEM	1 THERMAL DESORBER OFFGAS	2 LIQUID MERCURY WASTE	3 UNCOND GAS
FLOW RATE (LB/HR)	399	NEGLIGIBLE	39
GROUT STABILIZATION SUBSYSTEM	1 DESORBED SOLIDS	2 GROUT	GROU WAS
FLOW RATE (LB/HR)	1,550	3,100	4,6

Figure 4-17. Thermal Desorption and Mediated Electrochemical Oxidation: PFD for Main Thermal Treatment and Air Poll

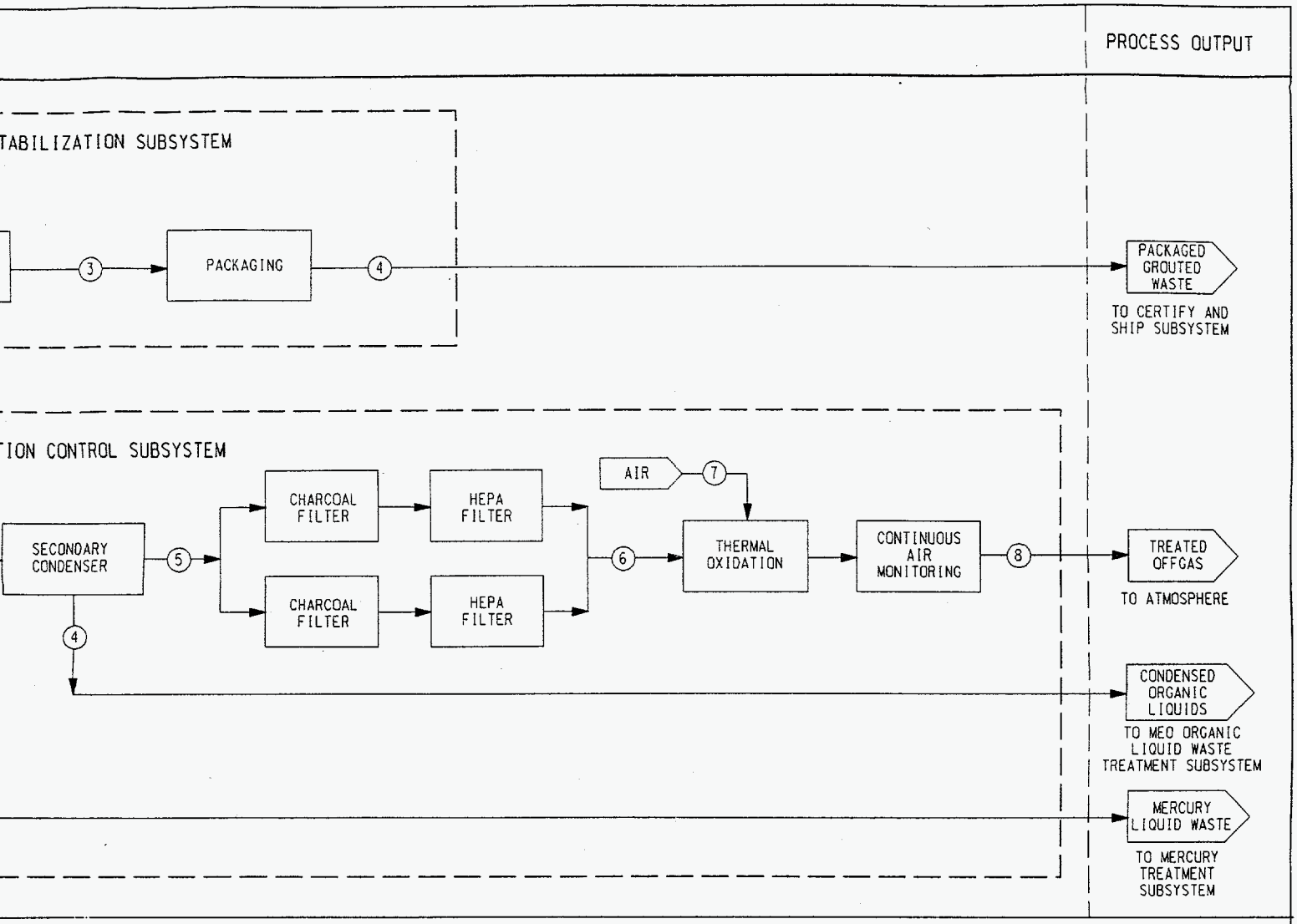

	4 DESORBED SOLIDS	5 DESORBER OFFGAS	6 FLY ASH		
	1,550	399	NEGLIGIBLE		
ED	4 CONDENSED LIQUID ORGANICS	5 NON-CONDENSABLE GASES	6 FILTERED OFFGAS	7 AIR	8 TREATED OFFGAS
	358	40	40	196	236
	4 PACKAGED GROUTED WASTE				
	4,650				

FILENAME: 0527/PFD-MTTP.DGN PLOT DATE: 08/04/95

ion Control Subsystems (System K-1).

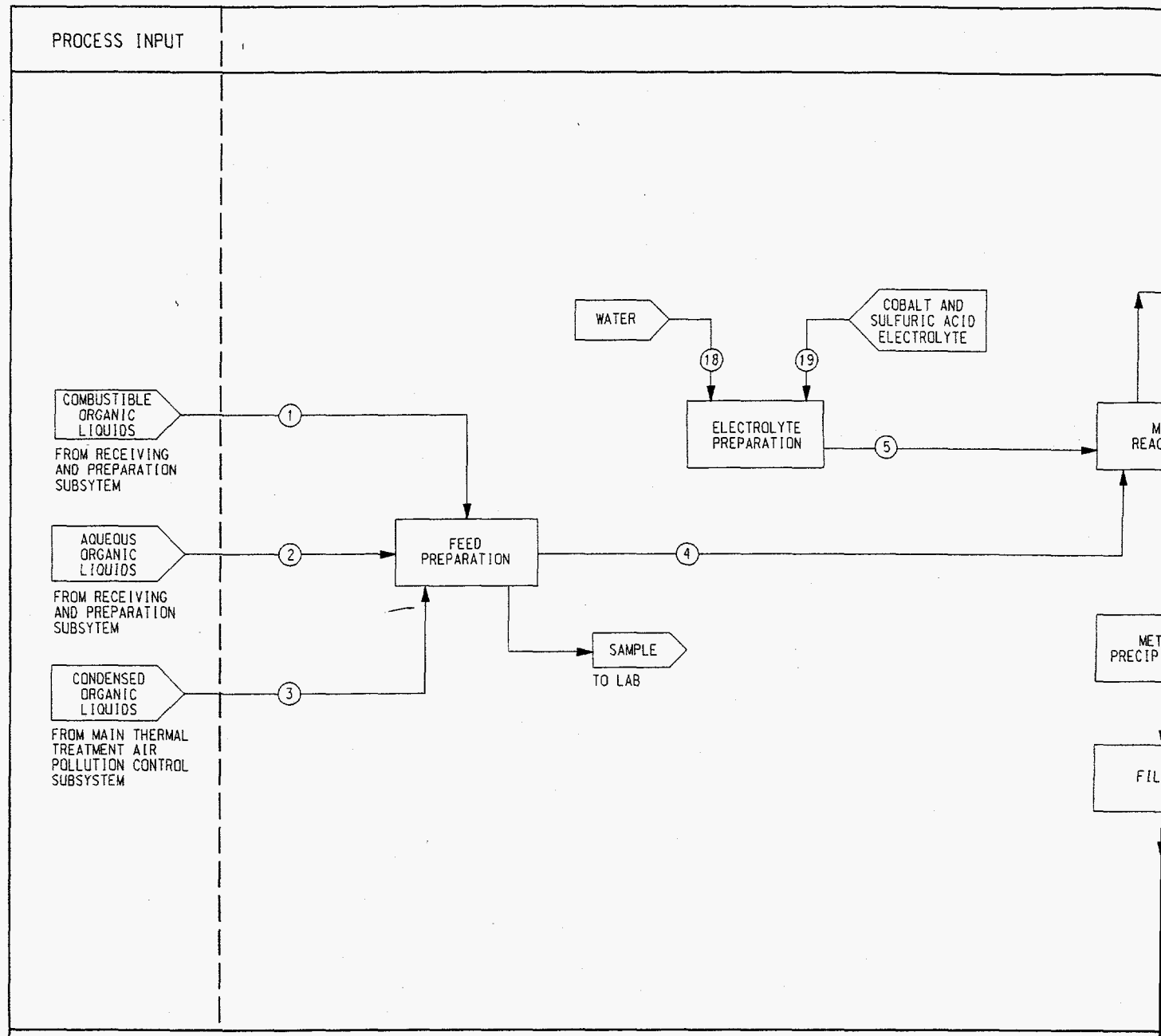

NOTE: TRACE METALS REMOVED FROM OFFGAS IN THE AIR POLLUTION CONTROL SUBSYSTEM ARE ROUTED TO SECONDARY STABILIZATION AND NOT SHOWN ABOVE.

ORGANIC LIQUID WASTE TREATMENT SUBSYSTEM	1 COMBUSTIBLE ORGANIC LIQUIDS	2 AQUEOUS ORGANIC LIQUIDS	3 CONDENSED ORGANIC LIQUIDS	4 ORGANIC LIQUIDS FEED
FLOW RATE (LB/HR)	51	16	358	425
ORGANIC LIQUID WASTE TREATMENT SUBSYSTEM	11 TREATED OFFGAS	12 NaOH (50% SOLUTION)	13 FILTRATE	14 HYPOCHLORIT SOLUTION
FLOW RATE (LB/HR)	3,170	62	1,058	950

Figure 4-18. Thermal Desorption and Mediated Electrochemical Oxidation: PFD for Organic Liquid Waste Treatment Su

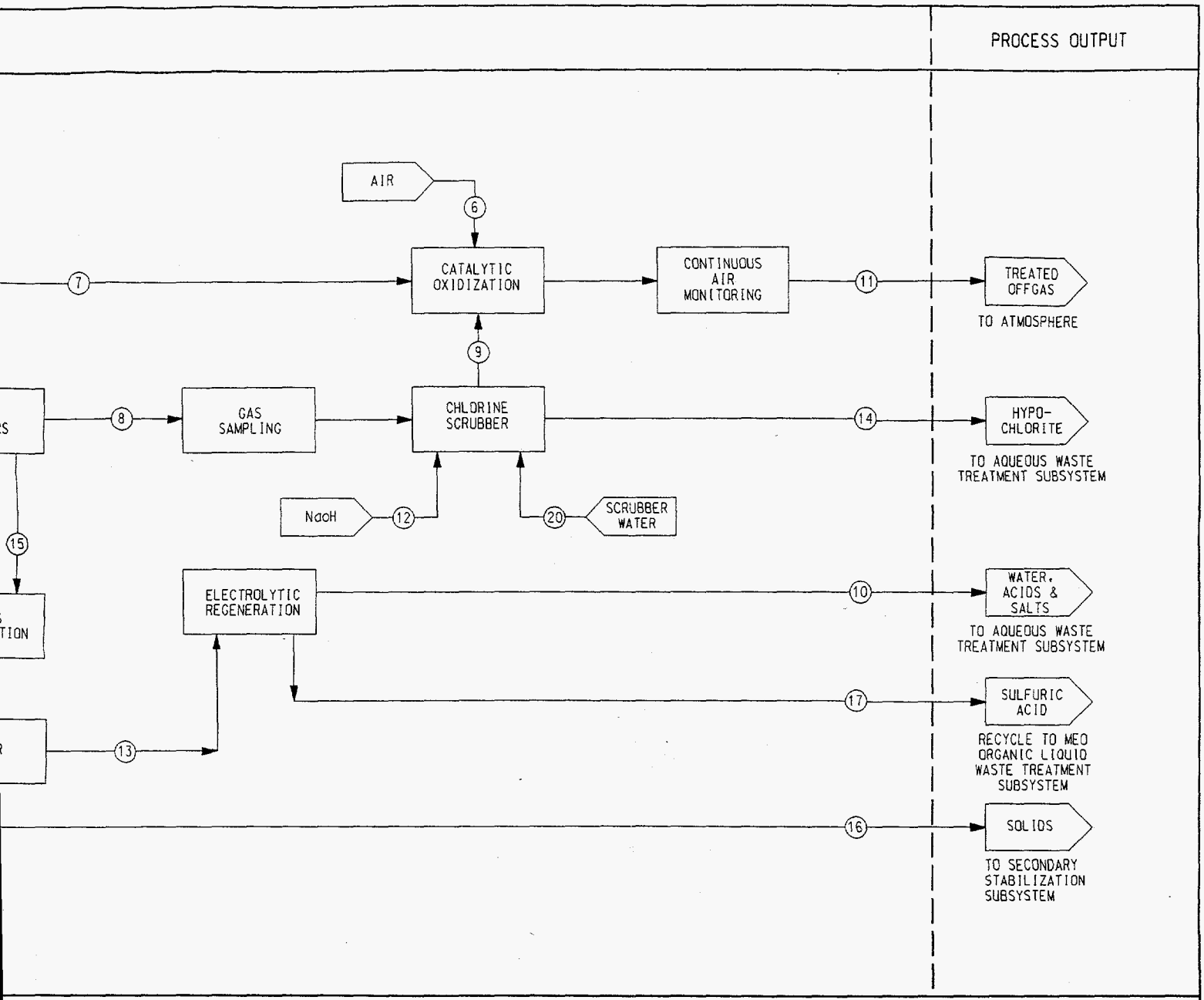

5 ELECTROLYTE SOLUTION	6 AIR	7 H_2-RICH CATHODE OFFGAS	8 CO_2 RICH ANODE OFFGAS	9 DECHLORINATED ANODE OFFGAS	10 WATER, ACID & SALTS
1,036	2,764	44	381	364	954
15 SPENT ELECTROLYTE SIDE STREAM	**16 FILTERED SOLIDS**	**17 SULFURIC ACID**	**18 WATER**	**19 ELECTROLYTE MAKEUP**	**20 SCRUBBER WATER**
1,140	82	104	850	186	871

stem (System K-1).

FILENAME: 0527/PFD-LOWT.DGN PLOT DATE: 08/04/95

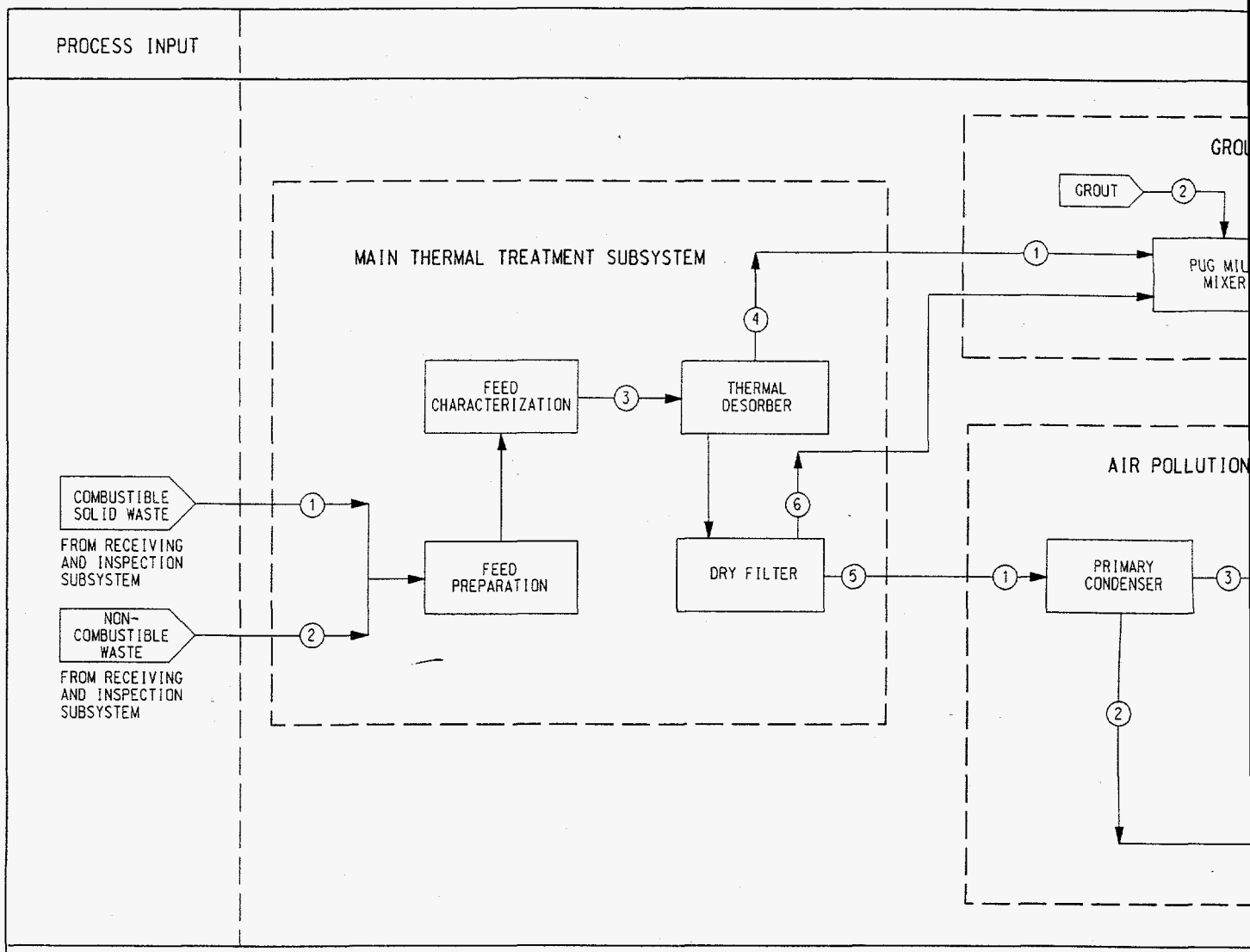

NOTE: TRACE METALS REMOVED FROM OFFGAS IN THE AIR POLLUTION CONTROL SUBSYSTEM ARE ROUTED TO SECONDARY STABILIZATION AND NOT SHOWN ABOVE.

MAIN THERMAL TREATMENT SUBSYSTEM	1 COMBUSTIBLE SOLID WASTE	2 NON-COMBUSTIBLE WASTE	3 FE
FLOW RATE (LB/HR)	609	1,340	1,9
AIR POLLUTION CONTROL SUBSYSTEM	1 THERMAL DESORBER OFFGAS	2 LIQUID MERCURY WASTE	3 UNCONDE GAS
FLOW RATE (LB/HR)	399	NEGLIGIBLE	39
GROUT STABILIZATION SUBSYSTEM	1 DESORBED SOLIDS	2 GROUT	3 GROU WAS
FLOW RATE (LB/HR)	1,550	3,100	4,65

Figure 4-19. Thermal Desorption and Supercritical Water Oxidation: PFD for Main Thermal Treatment and Air Pollution

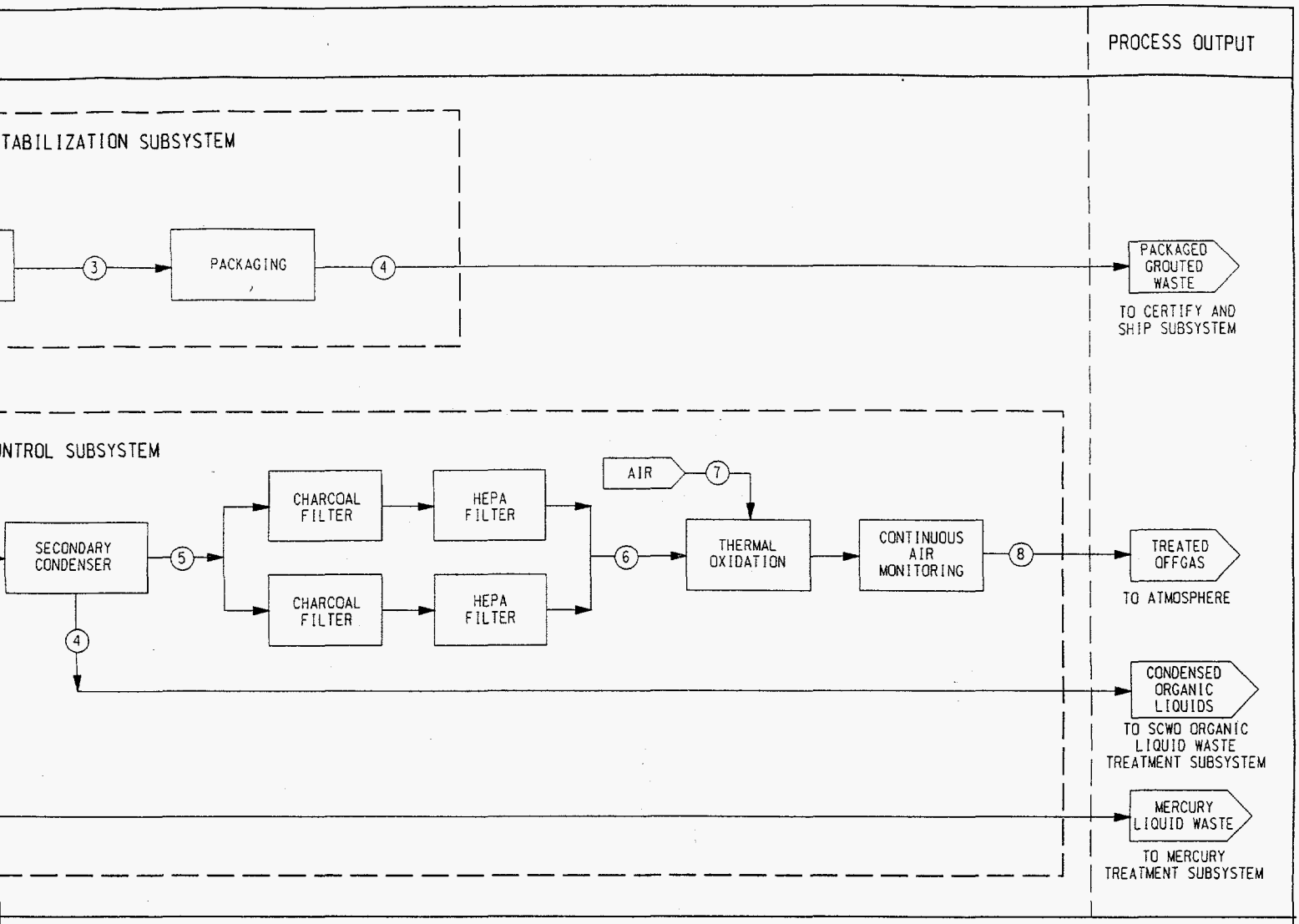

	4 DESORBED SOLIDS	5 DESORBER OFFGAS	6 FLY ASH		
	1,550	399	NEGLIGIBLE		
ED	4 CONDENSED LIQUID ORGANICS	5 NON-CONDENSABLE GASES	6 FILTERED OFFGAS	7 AIR	8 TREATED OFFGAS
	358	40	40	196	236
	4 PACKAGED GROUTED WASTE				
	4,650				

ontrol Subsystems (System L-1).

FILENAME: 0527/PFD-MTTP.DGN PLOT DATE: 08/04/95

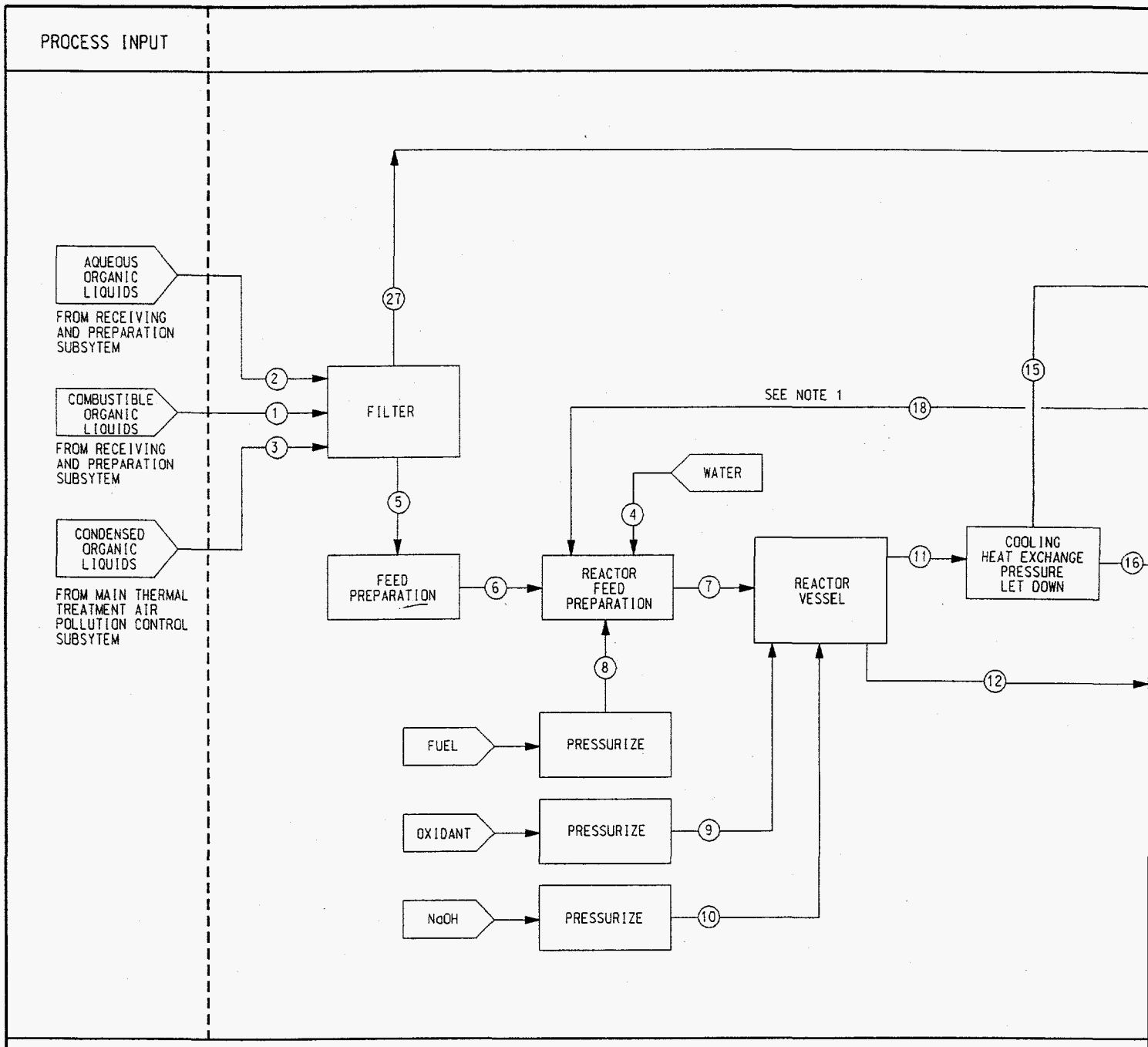

NOTES:

1. THE REQUIRED RECYCLING OF TREATED WASTE IS ASSUMED TO BE NEGLIGIBLE IN MOST CASES.
2. FUEL IS ADDED AS REQUIRED DEPENDING ON WASTE CHARACTERISTICS.
3. TRACE METALS REMOVED FROM OFFGAS IN THE AIR POLLUTION CONTROL SUBSYSTEM ARE ROUTED TO SECONDARY STABILIZATION AND NOT SHOWN ABOVE. (SEE GENERAL MASS FLOW RATES).

SUPER CRITICAL WATER OXIDATION SUBSYSTEM	1 COMBUSTIBLE ORGANIC LIQUIDS	2 AQUEOUS ORGANIC LIQUIDS	3 CONDENSED ORGANIC LIQUIDS	4 WATER	5 FILTERED LIQUIDS	6 PREP WAS
FLOW RATE (LB/HR)	51	16	358	3,002	425	42
SUPER CRITICAL WATER OXIDATION SUBSYSTEM	14 LOW PRESSURE LIQUIDS	15 OFFGASES	16 COOLED/GAS LIQUID MIXTURE	17 NON-CONDENSIBLE GASES	18 RECYCLED LIQUID WASTES	19 TREAT OFFGA
FLOW RATE (LB/HR)	298	381	3,168	NEGLIGIBLE	3	381

Figure 4-20. Thermal Desorption and Supercritical Water Oxidation: PFD for Organic Liquid Waste Treatment Subsystem (S

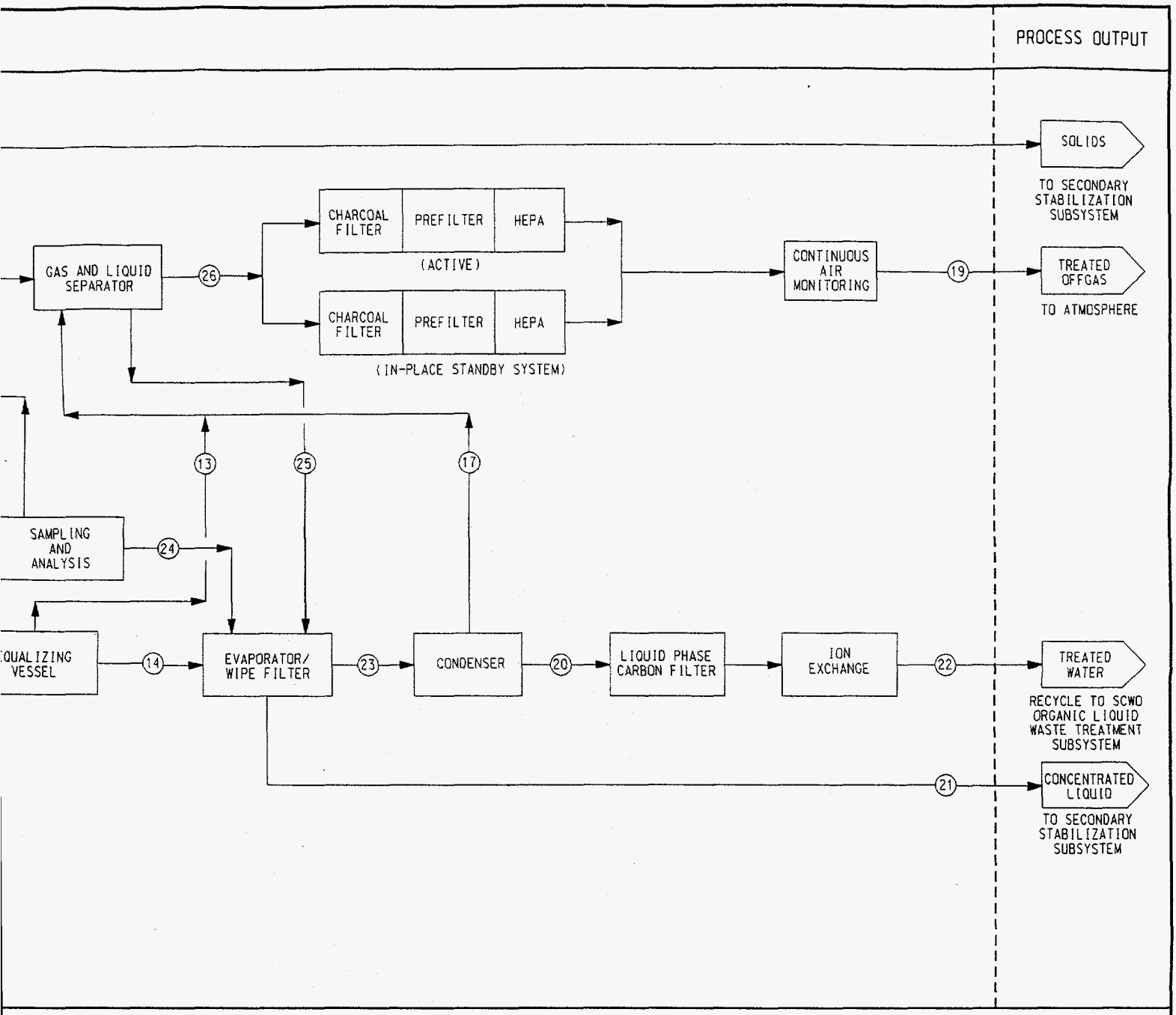

7 PRESSURIZED WASTE	8 FUEL	9 PRESSURIZED OXIDIZING AGENT (OXYGEN)	10 NaOH	11 SUPER CRITICAL WATER	12 BRINE SOLUTION	13 LOW PRESSURE GAS	
3,430	SEE NOTE 2	355	62	3,549	298	NEGLIGIBLE	
20 CONDENSED LIQUID	21 CONCENTRATED LIQUIDS	22 CLEANED WATER	23 OFFGAS	24 LIQUIDS	25 AQUEOUS LIQUIDS	26 OFFGAS	27 SOLIDS
3,371	92	3,371	3,371	3,165	NEGLIGIBLE	381	NEGLIGIBLE

em L-1).

FILENAME: 0527/PFD-SCWO.DGN PLOT DATE: 02/22/95

5. MODELING OF MAIN TREATMENT SUBSYSTEMS—DESCRIPTIONS AND RESULTS

5.1 Background

Initially, for Phase 1, mass and energy balances were done by simpler, less rigorous methods. Also, the database for calculating the input waste streams included only about half of the total contact-handled MLLW in the DOE complex. For Phase 2, the database was expanded to the full quantity, with the exception of the Hanford tank waste and the Rocky Flats Plant solar pond liquids, which are being addressed elsewhere using other processes that are more suitable than thermal treatment.

Further, for Phase 2, it was decided to model the systems with more robust analytical methods. The obvious choice was to select an existing, proven process simulation code from the many available in the private sector. The value of using this type of code over techniques developed specifically for the task at hand include (a) wide industrial acceptance, (b) proven capabilities to model essentially all types of unit operations, (c) large material data base, (d) capability to converge on complex design specifications, and (e) additional capabilities (such as economic studies or more detailed chemistry) which the project may wish to utilize beyond the present mass and energy balance calculations. The process simulation code chosen was ASPEN PLUS[3], which is derived from the basic non-proprietary ASPEN code developed at MIT. Its capabilities include a large material database, no restrictions on system configuration (multiple feedback loops), availability of all types of unit operation models, simultaneous convergence on the user's design specifications, sensitivity analysis, cost predictions, plotting, report generation, and a large user support organization. In particular, ASPEN PLUS now includes an updated graphical user interface, which facilitates the construction of the model process flow diagrams (designated herein as MPFDs, as opposed to the process flow diagrams, PFDs, developed as part of the ITTS study and included in Section 4.), and an expert system to guide the user through the required numerical input. Other unique advantages were that INEL study participants had previous experience using ASPEN-based codes, and other organizations at the INEL were already licensed to use this particular product.

5.2 Technical Approach

The objective of the modeling was to achieve balances for the major input and output mass flows and the major energy flows in each unit operation. This allowed limiting the detail and complexity in the unit operation models (even though those capabilities existed in the code) and modeling of only the major streams and chemical species. The modeling objective was met to the extent possible within the available resources. The efficiency of the modeling task was significantly impacted by instabilities in the current version of the code, which was newly released at the time the work was performed. This being the case, the original intent, to include all of the subsystems within the ASPEN PLUS models has not yet been achieved. The subsystems not modeled were previously indicated in Table 3-2. They include the lead recovery, mercury recovery, metal decontamination, polymer stabilization, aqueous waste (except for systems K-1 and L-1), and special wastes subsystems. Thus, the only subsystems modeled with ASPEN PLUS were the main and secondary thermal treatment subsystems, their APC subsystems, and the metal melter subsystem for metals with entrained contamination. Full system models would facilitate the calculation of mass and energy balances for the systems (and would make the models more useful for other calculations as well).

Models were developed from the descriptions and figures provided in References (1) and (2), and with discussions with the authors and other contributors. After successful development of the Phase 2 models, similar models were developed for the Phase 1 systems. The modeling process involved several

generations of models wherein the proper amount of detail was achieved, process refinements were incorporated, and a standardized modeling convention was developed to the extent possible for such varied systems.

The remainder of this section contains a general discussion of the models, applicable to all of the systems. Model-specific information is largely contained in the appendices. In particular, the MPFDs and assumption tables discussed below are contained in Appendix A.

Each of the ASPEN PLUS-generated MPFDs presented here should be compared with the corresponding PFD in Section 4 to better understand the simplifications incorporated into the modeling. Note that the MPFDs are not merely sketches of the models produced after the fact, but rather are derived directly from the actual flow sheets used within the code, upon which results are automatically printed after each run. Names of streams and unit operations were assigned in a consistent manner for all models to the extent possible. This was helpful because a major aspect of the ITTS study was to consider various combinations of the same basic subsystems. Names are somewhat cryptic due to an 8-character word size limitation in the code. Stream data are presented on "flags" attached to the streams, to conserve space. An option not chosen was to download abbreviated stream summary tables directly into the MPFDs. (Complete stream summaries are presented in Appendix C.) Information selected for display on the MPFDs include the temperature and total mass flow of each stream, and the heat duty of each unit operation (if non-zero). Pressure is not shown because, except for the high-pressure SCWO vessel used in system L-1, pressures were fixed at 1 atm, and no pressure drops were calculated.

The code offered a selection of graphical icons for each type of unit operation. As in the naming, these also were selected in a consistent manner within and between systems based on function and for ease in interpreting the MPFDs. Each general category of unit operation was assigned a unique icon. In general, the thermal treatment, quench, and scrubber operations were modeled with reactor blocks which calculate chemical equilibrium based on minimization of Gibbs free energy (called RGIBBS blocks in the code), different icons being used for the high-temperature vs. the low-temperature operations. In using these type blocks it was necessary to be aware of which products were known not to form based on operational experience, even though predicted based on only equilibrium considerations. Their formation was then restricted in the input specifications. Other operations, such as the pyrolyzers, catalytic oxidizers, CO2 absorbers, the salt splitter (system A-6), and the gasifier (system H-1), among others, were modeled with RSTOIC blocks, which calculated only the specific stoichiometric reactions, and their extent, as input by the user. Other commonly used unit operations included physical separation processes (filters, etc.), flash units, and stream splitters for separating the products exiting the reactor blocks. Some systems required special operations, such as the pumps and compressors used for the supercritical water oxidation process in system L-1.

Stream duplicators (titled DUPL1, DUPL2) and "dummy units" (Q1, Q2) were used as modeling artifacts to include the effect of heat losses from certain units (as explained in the tables below) and are shown on the MPFDs for completeness, but do not represent actual stream flows or actual operational units within the ITTS systems.

The code requires specification of a component list of all the elements and compounds the user wishes to consider. This list was kept small but consistent in the models because of the limited objectives of the present task. If all possible chemical combinations were allowed, run times would become excessively long with little gain. Trace materials such as radionuclides and pollutants were generally not included in the list and, thus, not tracked by the models. Also, it was not the job here to predict the products generated in the various treatment schemes (especially the more exotic designs), but to develop a reasonable component list based on the information supplied by the designers and manufacturers of the systems. It is necessary in ASPEN PLUS to specify solid materials (here using -S suffix) separately from

fluids, so that some components were specified twice. However, phase changes of minor constituents were not considered because it would not greatly affect the energy balances. For example, note that electrolytes are merely modeled as solids for simplicity. The complete list of elements and compounds used in the models were: H_2, O_2, N_2, Cl_2, F_2, NO, SO_2, H_2O, CO_2, CO, HCl, CH_4, S, As, Cd, Hg, Se, Fe, SiO_2, Al_2O_3, Fe_3O_4, Na_2CO_3, Na_2SO_4, H_2SO_4, H_2O-2, C-S, S-S, NaOH-S, NaCl-S, NaF-S, Fe-S, SiO_2-S, Al_2O_3-S, As-S, Ba-S, Cd-S, Cr-S, Pb-S, Se-S, Ag-S, $CaCO_3$-S, MgO-S, Na_2O-S, K_2O-S, Fe_3O_4-S, CaO-S, $CaCl_2$-S, $CaSO_4$-S, Na_2CO_3-S, Na_2SO_4-S, and $CoSO_4$. A few of these were only used in special cases. (Note that compound H2O-2 was used as a second water stream within a single unit wherein the streams did not mix.)

There is not always a one-to-one correspondence between the modeling units and real system hardware. Sometimes two or more ASPEN PLUS units were required to model the processes occurring in a single piece of hardware. This was commonly done at the exit of a reactor. An example of this would be a plasma furnace which has several product streams. A second unit to perform the separation (block type SEP) was placed after the furnace in the model to split the products into as many separate streams as required, such as, molten metal, slag, and gases with entrained particulate as specified by the user in the input for the SEP unit.

In other cases, a number of unit operations were combined into a single modeling block. For example, this technique was applied in many instances to represent the uninterrupted sequence of filtering steps applied to the offgas, namely, the baghouse, charcoal filter, prefilter, and HEPA filter, between the quench step and scrubbing of the offgas. These were grouped into a single SEP unit (named BAGHOUSE) which separated the "volatile trace metals" from the fly ash and from the offgas. The definition of "volatile trace metals" is itself a modeling artifact. Grouping the low-concentration, high-volatility metals (mercury and three other metals, hence the stream name HGPLUS) together was a convenient way to handle their disposition from the system. Since they were of low concentration, it was not required to accurately predict their true partitioning in the system when only a mass and energy balance of the major components was being sought. But still, for modeling purposes, it was necessary that these components completely exit the model so that they did not build up within feedback loops and prevent convergence of the models. Grouping of the volatile trace metals into a single product stream is not meant to imply that a single physical process is used in the real system to collect them for subsequent processing.

Assumption and energy balance summaries. Each of the models required hundreds of input specifications. Some of this information, such as the material flow connections between unit operations, is best presented and understood in the MPFDs. Other information is easily understood in tabular form, such as a list of the material components defined for each model, so that one can simply refer to the input files in Appendix B (see below). For much of the remainder of the information, especially that unique to each model, it was useful to summarize the data in an individual table for each system. This served as a useful tool for reviewing results. The tables contain the calculated operating temperature and heat duty of each unit and summaries of the allowed (or disallowed) chemical and/or physical processes in each unit operation. For example, the extent to which a reaction will occur must often be specified. For the RGIBBS reactors, which calculate equilibrium based on the minimization of Gibbs free energy, reactions that were not expected to reach equilibrium (for example, the recombination of C and H_2 into CH_4 at room temperature) were restricted accordingly. (Alternatively, an RSTOIC block could have been used, but this would have required that each separate reaction stoichiometry and extent be specified.) Many physical "extents" also had to be specified, especially with respect to separation of products; for example, the percent carryover of ash with the exhaust gas (fly ash) in a rotary kiln, which was specified as a fixed value based on vendor-supplied information .

Also contained in the assumption and energy balance tables is a description of the feedback loops. These are termed DESIGN SPECs in the code. Two examples are feedback loops which (1) calculate the amount of cooling water required to meet a specified outlet temperature, and (2) calculate the correct amount of gross soil (including moisture and $CaCO_3$) needed by the kiln to achieve a 2-to-1 ratio of bottom ash to soil (for vitrification). The code converges on solutions to all of the DESIGN SPECs during a run.

One of the unit operations that was greatly simplified was the wet acid gas scrubber units found in the majority of the systems. Again, since only mass and energy balance information was sought, the process was modeled as an ordinary chemical reactor rather than as electrolytic reactions in a distillation column. The issue of cooling in the scrubbers was an important consideration to the ITTS results. Preliminarily, the ITTS concept was to add cooling water directly into the scrubbers to eliminate (or minimize) the need for heat exchangers, the idea being to avoid a potential high-cost maintenance item because of the radioactive nature of the waste. This concept was abandoned due to the resulting high water flow rates required. Instead, only enough water is added to assure that scrubber liquor contains no more than 5% dissolved salts (TDS), taking no credit for the water vapor in the process stream. This greatly reduces the size requirements of the scrubbers and any downstream equipment, but necessitates the use of the heat exchangers. The MPFDs and the assumption and energy balance tables are contained in Appendix A.

Appendix B contains the ASCII text input files for all of the models (with filename extensions of ".INP"). Input files are the shortest means of documenting all of the information needed to recreate the numerical results, excluding any of the graphics. The code also produces ASCII text backup files ("*.BKP") that store all of the model information, and are transferable between computer systems.

Appendix C contains the detailed, ASPEN PLUS-generated stream summary results for each of the systems. These show the mass flow rates of each element/chemical in each stream, sub-divided into "MIXED" (gas or liquid phases) and "SOLID" (solid phase) substreams. (To conserve space, the computer output files in Appendices B and C have been slightly edited for this report.)

6. OVERALL MASS AND ENERGY BALANCES

The system modeling using the ASPEN PLUS code was used to model only the most complex and energy intensive of the subsystems for the 19 thermal treatment systems in the ITTS study. For the mass balances, these results were combined with the results of other calculations for the remainder of the subsystems to arrive at overall mass balances. These data and others were then entered into a spreadsheet program and used to arrive at a variety of summary results for comparison of the systems. Most notably, a comparison is made of the amount of volume and mass waste reduction achieved in processing and stabilizing the wastes. Energy balances are presented in this section based only on the ASPEN PLUS results. Energy consumption in the other subsystems would be much smaller than in the subsystems modeled with the code. Using current energy prices, energy costs are also presented. All of the results presented here are also found in Reference (2).

6.1 Mass Balance Results

The following discussion refers to the results shown in the mass balance summaries of Table 6-1. Included in the table are all of the ASPEN PLUS results. The results of the mass balance calculations for those subsystems not modeled with ASPEN PLUS are taken from Reference (2). Those calculations had been done for the Phase 1 task (Reference 1), and in some cases the flow rates and processes were revised and recalculated for Phase 2. Certain of those subsystems recycle small amounts of material back to the main thermal treatment subsystem. Had all of the subsystems been incorporated into the ASPEN PLUS models, the feedback from these recycle streams could have been considered. However, this was not done (for reasons discussed previously) so that there is not complete closure in the mass balances. These effects, along with roundoff errors, are the cause of the small differences in input and output flow rates found in the table. The maximum overall mass balance error, as calculated in the spreadsheet, is less than 6 lb/hr (~ 0.05%).

All mass balance results, along with estimated input and output material densities, were entered into a spreadsheet program (Ref. 6). Various summations and calculations of parameters of interest were then made, and are presented in Table 6-1. The size of the table is indicative of the complexity of the comparison process undertaken in the ITTS study.

Referring to Table 6-1, waste feed rates are the same for every system at 2927 lb/hr. Soil is not included in this category because it was considered a process input rather than a waste input. No credit has been taken for the possible use of contaminated soil in the ITTS study. Process inputs required by the systems include soil, fuel, oxidant, water, and caustic. Process water will be supplied almost wholly by recycle of output from the aqueous waste subsystems. (Preliminary calculations have shown that by slightly adjusting system temperatures, for example, at the scrubber outlet, more or less water can be lost by evaporization to the offgas streams to achieve a net water usage of zero.) Water used for indirect cooling (cooling water) is not considered under the category of process water. Significant differences exist between systems for these process inputs. Including the process water, amounts vary from a low of 4,555 lb/hr for System C-2 (Plasma Furnace w/ CO_2 Retention) to 45,698 lb/hr for System A-7 (Slagging Rotary Kiln). The process water portion of the process inputs ranges from 539 lb/hr for System G-1 (Molten Metal) to 18,649 lb/hr for System A-7 (Slagging Rotary Kiln).

System outputs fall into four categories: treated offgas, water for recycle, reclaimed solids and solid wastes. Offgas quantities are of interest because their potential impact on the environment and because of public perception. Offgas quantities range from a low of 792 lb/hr for System L-1 (Desorption w/ SCWO) to 26,437 lb/hr for System A-7 (Slagging Rotary Kiln). Reclaimed solids included decontaminated metal drums, lead ingots, and some recast metals of roughly 600 lb/hr for all systems (slightly less for System A-7).

All solid wastes exit the systems in a stabilized form. (However, the special wastes are, by definition, undefined at this point.) Stabilization is achieved in a number of ways. Mercury is always amalgamated. The remainder of the waste is either vitrified, polymerized, or grouted. Mixing ratios for the stabilization materials were, for vitrification, approximately one part soil per two parts waste (see previous sections for exact ratio), for polymerization, a one-to-one ratio, and for grouting, two parts grout to one part waste. Densities for the materials are found in the table.

Two (of the many) measures of the suitability of each of these nineteen technologies is the amount of mass and volume reduction achieved in the waste compared to the initial material. The parameter used for both is the ratio of unprocessed input wastes to processed output wastes. Volume reduction ratios exceeded 1.00 in every case, indicating a net reduction. Values ranged from 1.07 for System K-1 (Desorption w/ MEO) to 4.27 for System G-1 (Molten Metal), and averaged 2.87 for all systems. Mass reduction ratios were as low as about 0.6 for systems K-1 and L-1, meaning that more processed wastes left the facilities than raw wastes entered. The maximum mass reduction ratio was 1.73 for system G-1, and the average was 1.33 for all systems.

6.2 Energy Balance Results

Energy requirements (heat duties) are calculated by ASPEN PLUS as part of the process simulation. Since the subsystems modeled with the code included all of the most energy intensive unit operations, this represented the majority of the energy consumption associated with each of the systems. Energy consumption for the remainder of the subsystems are not included for the present results, which are shown in Table 6-2. The table includes only (prime) energy input requirements, and does not include any cooling requirements (such as the indirect cooling of the scrubbers). In the models, energy loss terms were included for those operations which were directly heated by methane burning. This was done because the products of combustion become part of the waste stream and affect the operation and size of all the downstream units, thus making it important to accurately estimate their magnitude. The losses were estimated to be 5% of the sensible heat added to the stream, as discussed on the assumption and energy balance tables in Appendix A. For other unit operations, loss terms were not added to the models but are included in the present table. Energy usage varied by an order of magnitude with the highest user being System A-6 (Rotary Kiln w/ Maximum Recycling) at 35.7 MMBtu/hr, and the lowest System B-1 (Pyrolyzer) at 3.35 MMBtu/hr.

Energy costs are also included on Table 6-2. Here the maximum and minimum vary by a factor of twenty, with the highest again being System A-1 at $33.0 million over twenty years (1994 dollars), and the lowest, System A-5 (Rotary Kiln w/ Polymer Stabilization) at $1.6 million. Although System A-5 uses almost three times as much primary energy as System B-1, its usage is predominately in the form of natural gas which is currently much cheaper than electricity. As discussed in Reference (2), where all costs are presented, the energy costs represented only a minor portion of the total lifecyle costs of any of the systems.

Table 6-1. Overall Mass Balances and Summary Results for the ITTS Study Process Modeling.

Mass Flow (lb/hr)	OVERALL MASS BALANCES FOR 19 ITTS SYSTEMS (including ASPEN modeling results)								
	A-1 Baseline Rotary Kiln	A-2 Rotary Kiln w/ Oxygen	A-3 Rotary Kiln w/ Wet APC	A-4 Rotary Kiln w/ CO2 Retention	A-5 Rotary Kiln w/ Poly. Stabilization	A-6 Rotary Kiln w/ Max. Recycling	A-7 Slagging Rotary Kiln	B-1 Pyrolysis .	C-1 Plasma Furnace
	WASTE INPUT								
MAIN THERMAL TREATMENT SUBSYSTEM (MTT)									
Combustible	660.4	660.4	660.4	660.4	660.4	660.4	660.4	660.4	660.4
Noncombustible	1,339.6	1,339.6	1,339.6	1,339.6	1,339.6	1,339.6	1,339.6		1,339.6
Metal							149		149
Aqueous Liquid									
THERMAL DESORBER									
Combustible									
Noncombustible									
VITRIFIER									
Combustible									
Noncombustible								1,340	
Subtotal - MTT	**2,000**	**2,000**	**2,000**	**2,000**	**2,000**	**2,000**	**2,149**	**2,000**	**2,149**
AUXILIARY SUBSYSTEMS									
Metallic Waste (Surface Contamination)	468	468	468	468	468	468	468	468	468
Metallic Waste (Entrained Contamination)	149	149	149	149	149	149		149	
Mercury	50	50	50	50	50	50	50	50	50
Lead Metal	26	26	26	26	26	26	26	26	26
Aqueous Waste	80	80	80	80	80	80	80	80	80
Special Waste	153	153	153	153	153	153	153	153	153
Halide and Sulfide salts	1	1	1	1	1	1	1	1	1
Subtotal - Auxiliary	**927**	**927**	**927**	**927**	**927**	**927**	**778**	**927**	**778**
Contaminated Soil (Can replace Soil, below)									
TOTAL WASTE INPUT	2,927	2,927	2,927	2,927	2,927	2,927	2,927	2,927	2,927

MASSES02.XL5

Mass Flow (lb/hr)	OVERALL MASS BALANCES FOR 19 ITTS SYSTEMS (including ASPEN modeling results)								
	A-1 Baseline Rotary Kiln	A-2 Rotary Kiln w/ Oxygen	A-3 Rotary Kiln w/ Wet APC	A-4 Rotary Kiln w/ CO2 Retention	A-5 Rotary Kiln w/ Poly. Stabilization	A-6 Rotary Kiln w/ Max. Recycling	A-7 Slagging Rotary Kiln	B-1 Pyrolysis .	C-1 Plasma Furnace
	A. PROCESS INPUTS								
MAIN THERMAL TREATMENT SUBSYSTEM (MTT)									
H2O	482	1,824	526	1	663	485			
CH4	1	1	1	261	1	1	568		
O2		1,830		1,455				290	
Air	7,859		7,859		7,878	7,859	18,326		6,239
Air Inleakage	2,695	2,695	2,695	2,695	2,695	2,695	2,695	224	
Soil	498	498	370	498		495	564		482
VITRIFIER									
Soil								498	
Water	91	91	68	91		90			
CH4	15	15	11	15		15			
O2	197	197	146	197		196		23	
Air	15	15	11	15		15			
SCC									
CH4	418	137	419	355	424	418	208		
O2		658		1,712				834	
Air	8,663		8,691		8,790	8,666	4,319		1
WATER									
Primary Quench	10221	4890		13434	10354	10224	15425	1411	3549
Secondary Quench				926					
Primary Scrubber	2,259	2,259	2,259		2,259	2,259	2,259	2,259	2,259
Secondary Scrubber									
OTHER									
NaOH	78	78	76		78	2	78	78	78
Na2CO3									
CaO				374					
Electrolyte(water & CoSO4)									
Input to Indirect Heater									
Air to Catalytic Oxidizer									
CH4									
Air									
Subtotal - MTT	**33,492**	**15,188**	**23,132**	**22,029**	**33,142**	**33,420**	**44,442**	**5,617**	**12,608**
AUXILIARY SUBSYSTEMS									
METAL MELTING (MM)									
Air	25	25	25	25	25	25	0	25	0
Water	19	19	19	19	19	19	0	19	0
Soil + Flux	10	10	10	10	10	10	0	10	0
Subtotal - MM	**54**	**54**	**54**	**54**	**54**	**54**	**0**	**54**	**0**

Mass Flow (lb/hr)	A-1 Baseline Rotary Kiln	A-2 Rotary Kiln w/ Oxygen	A-3 Rotary Kiln w/ Wet APC	A-4 Rotary Kiln w/ CO2 Retention	A-5 Rotary Kiln w/ Poly. Stabilization	A-6 Rotary Kiln w/ Max. Recycling	A-7 Slagging Rotary Kiln	B-1 Pyrolysis	C-1 Plasma Furnace
	OVERALL MASS BALANCES FOR 19 ITTS SYSTEMS (including ASPEN modeling results)								
LEAD RECOVERY (PbR)									
APC Water (use recycle)	14	14	14	14	14	14	14	14	14
Fuel									
Air	21	21	21	21	21	21	21	21	21
Blast Water	29	29	29	29	29	29	29	29	29
Soil	0.26	0.26	0.26	0.26	0.26	0.26	0.26	0.26	0.26
Subtotal - PbR	**64.26**	**64.26**	**64.26**	**64.26**	**64.26**	**64.26**	**64.26**	**64.26**	**64.26**
AQUEOUS WASTE TREATMENT (AQ)									
Resins & Activated Carbon	810.96	600.96	199.56	942.6	827.1	798.36	1117.02	281.22	385.56
Additives (0.051 lb/lb input)	0	0	0	0	0	0	0	0	0
Rinse Water for 2° Stabilization	403.25	298.25	97.55	469.07	411.32	396.95	556.28	138.38	190.55
Subtotal - AQ	**1214.208**	**600.96**	**199.56**	**942.6**	**827.1**	**798.36**	**1117.02**	**281.22**	**385.56**
MERCURY AMALGAMATION (HgA)									
Additives (0.1 lb/lb)	5	5	5	5	5	5	5	5	5
Nitrogen (0.22 lb/lb)	11	11	11	11	11	11	11	11	11
Air (0.60 lb/lb)	30	30	30	30	30	30	30	30	30
Water (0.58 lb/lb)	29	29	29	29	29	29	29	29	29
Subtotal - HgA	**75**	**75**	**75**	**75**	**75**	**75**	**75**	**75**	**75**
TOTAL PROCESS INPUTS	**34,899**	**15,982**	**23,525**	**23,165**	**34,162**	**34,411**	**45,698**	**6,091**	**13,133**
	INTERNAL SYSTEM RECYCLE								
Scrubber Liquor from scrubber to aqueous waste treatment	13,436	9,936	3,246	15,630	13,705	13,226	18,537	4,607	6,346
Sludge from Pb recovery to aqueous waste treatment	0	0	0	0	0	0	0	0	0
Resins from aqueous waste treatment to thermal treatment	824	611	203	958	841	812	1,136	286	392
Hg amalgamation solids to thermal treatment	18	18	18	18	18	18	18	18	18
Water from metal decontamination to recycle	112	112	112	112	112	112	112	112	112
TOTAL INTERNAL SYSTEM RECYCLE (Not including recycle to thermal treatment)	**13,548**	**10,048**	**3,358**	**15,742**	**13,817**	**13,338**	**18,649**	**4,719**	**6,458**
TOTAL INPUT	**51,375**	**28,958**	**29,810**	**41,834**	**50,907**	**50,677**	**67,275**	**13,738**	**22,516**

MASSES02.XL5

Mass Flow (lb/hr)	OVERALL MASS BALANCES FOR 19 ITTS SYSTEMS (including ASPEN modeling results)								
	A-1 Baseline Rotary Kiln	A-2 Rotary Kiln w/ Oxygen	A-3 Rotary Kiln w/ Wet APC	A-4 Rotary Kiln w/ CO2 Retention	A-5 Rotary Kiln w/ Poly. Stabilization	A-6 Rotary Kiln w/ Max. Recycling	A-7 Slagging Rotary Kiln	B-1 Pyrolysis .	C-1 Plasma Furnace
	SYSTEM OUTPUT								
	B. MAIN THERMAL TREATMENT (MTT) SUBSYSTEM OUTPUT								
SOLIDS									
Slag	1,495	1,495	1,109	1,495		1,485	1,691	1,495	1,450
Debris									
Nonvitrified Ash			277		1,078				
Metal						8			170
Trace Metals	4	4	4	4	4	4	4	4	4
Na2CO3									
NaCl/NaF						0.24			
HCl (50% in water)						140			
CaO				317					
CaCl2, CaSO4				113					
Subtotal - Solids	**1,499**	**1,499**	**1,390**	**1,929**	**1,082**	**1,637**	**1,695**	**1,499**	**1,624**
Main Thermal Treatment APC									
LIQUIDS & DISSOLVED GASES									
Scrubber Water	13,323	9,823	3,133	15,630	13,592	13,224	18,424	4,494	6,233
Dissolved salts	113	113	113		113	2	113	113	113
Dissolved gases									
O2	2	5		2	2		2		
N2	13	6	3	21	13		18	1	6
CO2	23	47	5		23		35	74	17
SO2		1						1	
Electrolyte(water & CoSO4)									
Subtotal - Liquids & Dissolved Gases	**13,474**	**9,995**	**3,254**	**15,653**	**13,743**	**13,226**	**18,592**	**4,683**	**6,369**
GASES									
O2	1,625	1,387	1,627	156	1,632	1,627	1,489	16	258
N2	14,730	2,062	14,762	2,046	14,842	14,746	19,523	171	4,781
CO2	2,364	1,569	2,378	2,929	2,352	2,387	3,366	1167	1,236
H2O vapor	1,478	357	1,482	996	1,488	1,479	1,923	77	485
SO2	3	2	3		3	3	3	2	2
Subtotal - Gases	**20,200**	**5,377**	**20,252**	**6,127**	**20,317**	**20,242**	**26,304**	**1,433**	**6,762**

	OVERALL MASS BALANCES FOR 19 ITTS SYSTEMS (including ASPEN modeling results)								
Mass Flow (lb/hr)	A-1 Baseline Rotary Kiln	A-2 Rotary Kiln w/ Oxygen	A-3 Rotary Kiln w/ Wet APC	A-4 Rotary Kiln w/ CO2 Retention	A-5 Rotary Kiln w/ Poly. Stabilization	A-6 Rotary Kiln w/ Max. Recycling	A-7 Slagging Rotary Kiln	B-1 Pyrolysis	C-1 Plasma Furnace
INDIRECT-FIRED EXHAUST									
O2									
N2									
CO2									
H2O vapor									
Subtotal - Indirect-fired exhaust	**0**	**0**	**0**	**0**	**0**	**0**	**0**	**0**	**0**
TOTAL - MTT Subsystems Output	**35,173**	**16,871**	**24,896**	**23,709**	**35,142**	**35,105**	**46,591**	**7,615**	**14,755**
	AUXILIARY SUBSYSTEM OUTPUTS								
Metal Decontamination (MD)									
Clean Metal	463	463	463	463	463	463	463	463	463
Grit	5	5	5	5	5	5	5	5	5
Water	112	112	112	112	112	112	112	112	112
Subtotal - Metal Decon	**580**	**580**	**580**	**580**	**580**	**580**	**580**	**580**	**580**
Metal Melting									
Clean Metal	134	134	134	134	134	134	0	134	0
Treated Offgas	46	46	46	46	46	46	0	46	0
Slag	23	23	23	23	23	23	0	23	0
Subtotal - Metal Melting	**203**	**203**	**203**	**203**	**203**	**203**	**0**	**203**	**0**
Lead Recovery									
Clean Lead	20	20	20	20	20	20	20	20	20
Offgas	35	35	35	35	35	35	35	35	35
Water	29.7	29.7	29.7	29.7	29.7	29.7	29.7	29.7	29.7
Sludge	0.3	0.3	0.3	0.3	0.3	0.3	0.3	0.3	0.3
Lead Ingots	4.5	4.5	4.5	4.5	4.5	4.5	4.5	4.5	4.5
Slag	0.78	0.78	0.78	0.78	0.78	0.78	0.78	0.78	0.78
Subtotal - Lead Recovery	**90.28**	**90.28**	**90.28**	**90.28**	**90.28**	**90.28**	**90.28**	**90.28**	**90.28**
Primary Stabilization									
Offgas	318	318	236	318		316			
Subtotal - Primary Stab.	**318**	**318**	**236**	**318**	**0**	**316**	**0**	**0**	**0**

	OVERALL MASS BALANCES FOR 19 ITTS SYSTEMS (including ASPEN modeling results)								
Mass Flow (lb/hr)	A-1 Baseline Rotary Kiln	A-2 Rotary Kiln w/ Oxygen	A-3 Rotary Kiln w/ Wet APC	A-4 Rotary Kiln w/ CO2 Retention	A-5 Rotary Kiln w/ Poly. Stabilization	A-6 Rotary Kiln w/ Max. Recycling	A-7 Slagging Rotary Kiln	B-1 Pyrolysis .	C-1 Plasma Furnace
Aqueous Waste Treatment									
Treated Water (0.977 lb/lb aqueous waste, 0.899 lb/lb scrubber liquor)	12,157.12	9,010.62	2,996.31	14,129.53	12,398.96	11,968.33	16,742.92	4,219.85	5,783.21
Resins, Organics, Spent Carbon (0.061 lb/lb aqueous waste, 0.061 lb/lb scrubber liquor)	824.476	610.976	202.886	958.31	840.885	811.666	1135.637	285.907	391.986
Treated Offgas (0.007 lb/lb aqueous waste)	0.56	0.56	0.56	0.56	0.56	0.56	0.56	0.56	0.56
Concentrated Liquids (0.007 lb/lb aqueous waste, 0.10 lb/lb scrubber liquor)	1,231.16	881.16	212.16	1,563.56	1,258.06	1,321.16	1,741.26	348.26	522.16
Salts from Concentrated Liquids	113.00	113.00	113.00	0.00	113.00	2.00	113.00	113.00	113.00
Rinse water from 2° stabilization	403.25	298.25	97.55	469.07	411.32	396.95	556.28	138.38	190.55
Subtotal - Aqueous Waste Treatment	**14,729.57**	**10,616.32**	**3,524.92**	**16,651.96**	**14,611.46**	**14,103.72**	**19,733.38**	**4,967.58**	**6,810.92**
Mercury Amalgamation									
Amalgamated Waste (0.21 lb/lb input)	10.5	10.5	10.5	10.5	10.5	10.5	10.5	10.5	10.5
Offgas (1.94 lb/lb input)	97	97	97	97	97	97	97	97	97
Contaminated Solids (0.35 lb/lb input)	17.5	17.5	17.5	17.5	17.5	17.5	17.5	17.5	17.5
Subtotal - Mercury Amalgamation	**125**	**125**	**125**	**125**	**125**	**125**	**125**	**125**	**125**
Special Waste	153	153	153	153	153	153	153	153	153
SUBTOTAL - Auxiliary Subsystem Outputs	16,198.85	12,085.60	4,912.09	18,121.24	15,762.74	15,570.87	20,681.66	6,118.86	7,759.20
SUBTOTAL - Offgas	20,696.56	5,873.56	20,666.45	6,623.56	20,495.56	20,736.43	26,436.56	1,611.56	6,894.56
TOTAL OUTPUT	51,371.85	28,956.60	29,808.09	41,830.24	50,904.74	50,676.11	67,272.66	13,733.86	22,514.20
MASS BALANCE (Input - Output)	**2.92**	**0.92**	**1.92**	**3.92**	**1.92**	**0.68**	**1.92**	**3.92**	**3.92**

Mass Flow (lb/hr)	OVERALL MASS BALANCES FOR 19 ITTS SYSTEMS (including ASPEN modeling results)								
	A-1 Baseline Rotary Kiln	A-2 Rotary Kiln w/ Oxygen	A-3 Rotary Kiln w/ Wet APC	A-4 Rotary Kiln w/ CO2 Retention	A-5 Rotary Kiln w/ Poly. Stabilization	A-6 Rotary Kiln w/ Max. Recycling	A-7 Slagging Rotary Kiln	B-1 Pyrolysis	C-1 Plasma Furnace
Volume Reduction Ratio Calculation									
Densities (lb/ft3)									
Input Waste	64	64	64	64	64	64	64	64	64
Soil	67	67	67	67	67	67	67	67	67
Metal (Input)	26	26	26	26	26	26	26	26	26
Metal (Output)	480	480	480	480	480	480	480	480	480
Aqueous Liquid	62	62	62	62	62	62	62	62	62
Slag	187	187	187	187	187	187	187	187	187
Polymerized Salt	80	80	80	80	80	80	80	80	80
Polymerized Ash/Metal/Salt	94	94	94	94	94	94	94	94	94
Polymerized Lime	96.5	96.5	96.5	96.5	96.5	96.5	96.5	96.5	96.5
Grouted Debris	126.6	126.6	126.6	126.6	126.6	126.6	126.6	126.6	126.6
Stab Hg Amalgam	732.96	732.96	732.96	732.96	732.96	732.96	732.96	732.96	732.96
Volumetric Flow Rate Calculation									
Volume Solids In (ft3/hr)	45.73	45.73	45.73	45.73	45.73	45.73	45.73	45.73	45.73
Mass Slag Out (lb/hr)	1,518.78	1,518.78	1,132.78	1,518.78	23.78	1,508.78	1,691.78	1,518.78	1,450.78
Mass Nonvitrified Ash Out	0.00	0	277	0	1,078	0	0	0	0
Mass Special Waste (not stab)	153.00	153.00	153.00	153.00	153.00	153.00	153.00	153.00	153.00
Mass Residues from MD	5.00	5.00	5.00	5.00	5.00	5.00	5.00	5.00	5.00
Mass MTT Debris & PbR Sludge Out (lb/hr)	0.30	0.30	0.30	0.30	0.30	0.30	0.30	0.30	0.30
Mass Metal/Pb Out (lb/hr)clean	621.50	621.50	621.50	621.50	621.50	629.50	487.50	621.50	657.50
Mass Salts Out (lb/hr)	118.00	118.00	118.00	118.00	118.00	7.24	118.00	118.00	118.00
Mass Lime Out (lb/hr)	0.00	0	0	317	0	0	0	0	0
Mass Stab Hg Amalgam Out	10.50	10.50	10.50	10.50	10.50	10.50	10.50	10.50	10.50

MASSES02.XL5

	OVERALL MASS BALANCES FOR 19 ITTS SYSTEMS (including ASPEN modeling results)								
Mass Flow (lb/hr)	A-1 Baseline Rotary Kiln	A-2 Rotary Kiln w/ Oxygen	A-3 Rotary Kiln w/ Wet APC	A-4 Rotary Kiln w/ CO2 Retention	A-5 Rotary Kiln w/ Poly. Stabilization	A-6 Rotary Kiln w/ Max. Recycling	A-7 Slagging Rotary Kiln	B-1 Pyrolysis .	C-1 Plasma Furnace
Volume Slag Out (ft3/hr)	8.12	8.12	6.06	8.12	0.13	8.07	9.05	8.12	7.76
Vol Stab Nonvitrified Ash Out (ft3/hr)	0.00	0.00	5.89	0.00	22.94	0.00	0.00	0.00	0.00
Volume Special Wastes (not stabilized)(ft3/hr)	2.39	2.39	2.39	2.39	2.39	2.39	2.39	2.39	2.39
Vol Stab MD Residues Out (ft3/hr)	0.11	0.11	0.11	0.11	0.11	0.11	0.11	0.11	0.11
Volume Stab MTT Debris & PbR Sludge Out (ft3/hr)	0.01	0.01	0.01	0.01	0.01	0.01	0.01	0.01	0.01
Volume Metal/Pb Out (ft3/hr)	1.29	1.29	1.29	1.29	1.29	1.31	1.02	1.29	1.37
Volume Stabilized Salts Out (ft3/hr)	2.95	2.95	2.51	2.45	2.95	0.18	2.95	2.95	2.95
Volume Stabilized Lime Out (ft3/hr)	0.00	0.00	0.00	6.57	0.00	0.00	0.00	0.00	0.00
Vol Stab Hg Amalgam Out	0.01	0.01	0.01	0.01	0.01	0.01	0.01	0.01	0.01
Total Volume Solids Out to Disposal(ft3/hr) (includes 1:1 polymer:ash, 1:1 polymer:salt, 2:1 grout:debris)	13.6	13.6	17.0	19.7	28.5	10.8	14.5	13.6	13.2
Volume Metal to Recycle (ft3/hr)	1.29	1.29	1.29	1.29	1.29	1.31	1.02	1.29	1.37
Waste Volume Reduction Ratio (In/Out)	3.37	3.37	2.69	2.33	1.60	4.25	3.15	3.37	3.46
Mass Processed Waste Out (lb/hr)									
Slag	1518.78	1518.78	1132.78	1518.78	23.78	1508.78	1691.78	1518.78	1450.78
Stabilized Ash (1:1 polymer:ash)	0.00	0.00	554.00	0.00	2156.00	0.00	0.00	0.00	0.00
Special Waste	153.00	153.00	153.00	153.00	153.00	153.00	153.00	153.00	153.00
Stabilized MD Residue (1:1 polymer:residue)	10.00	10.00	10.00	10.00	10.00	10.00	10.00	10.00	10.00
Stabilized Debris & PbR Sludge (2:1 grout:debris)	0.90	0.90	0.90	0.90	0.90	0.90	0.90	0.90	0.90
Stabilized Salts (1:1 polymer:salt)	236.00	236.00	236.00	236.00	236.00	14.48	236.00	236.00	236.00
Stabilized Lime (1:1 polymer:lime)	0.00	0.00	0.00	634.00	0.00	0.00	0.00	0.00	0.00
Hg Amalgam	10.50	10.50	10.50	10.50	10.50	10.50	10.50	10.50	10.50
Total Mass Processed Wastes Out (lb/hr)	1929.18	1929.18	2097.18	2563.18	2590.18	1697.66	2102.18	1929.18	1861.18
Waste Mass Reduction Ratio (In/Out)	1.52	1.52	1.40	1.14	1.13	1.72	1.39	1.52	1.67

Mass Flow (lb/hr)	OVERALL MASS BALANCES FOR 19 ITTS SYSTEMS (including ASPEN modeling results)								
	A-1 Baseline Rotary Kiln	A-2 Rotary Kiln w/ Oxygen	A-3 Rotary Kiln w/ Wet APC	A-4 Rotary Kiln w/ CO2 Retention	A-5 Rotary Kiln w/ Poly. Stabilization	A-6 Rotary Kiln w/ Max. Recycling	A-7 Slagging Rotary Kiln	B-1 Pyrolysis .	C-1 Plasma Furnace
	Calculated Liquid Water Generation (lb/hr)								
Inputs to Aqueous Waste Treatment System									
Metal Decontamination Water	112.00	112.00	112.00	112.00	112.00	112.00	112.00	112.00	112.00
Lead Recovery Blast Water	29.70	29.70	29.70	29.70	29.70	29.70	29.70	29.70	29.70
Aqueous Waste	80.00	80.00	80.00	80.00	80.00	80.00	80.00	80.00	80.00
Rinse Water from 2° stabilization	403.25	298.25	97.55	469.07	411.32	396.95	556.28	138.38	190.55
Scrubber water	13,323.00	9,823.00	3,133.00	15,630.00	13,592.00	13,224.00	18,424.00	4,494.00	6,233.00
Total Input to Aqueous Treatment System (available for recycle)	**13,947.95**	**10,342.95**	**3,452.25**	**16,320.77**	**14,225.02**	**13,842.65**	**19,201.98**	**4,854.08**	**6,645.25**
Total Water Requirements									
Water input to 1°	482.00	1,824.00	526.00	1.00	663.00	485.00	0.00	0.00	0.00
1° and 2° Quench water	10,221.00	4,890.00	0.00	14,360.00	10,354.00	10,224.00	15,425.00	1,411.00	3,549.00
1° and 2° Scrubber water	2,259.00	2,259.00	2,259.00	0.00	2,259.00	2,259.00	2,259.00	2,259.00	2,259.00
Rinse Water for 2° stabilization	403.25	298.25	97.55	469.07	411.32	396.95	556.28	138.38	190.55
Metal Decontamination Water	112.00	112.00	112.00	112.00	112.00	112.00	112.00	112.00	112.00
Mercury Amalgamation Water	29.00	29.00	29.00	29.00	29.00	29.00	29.00	29.00	29.00
Lead Recovery, Blast and APC	43.00	43.00	43.00	43.00	43.00	43.00	43.00	43.00	43.00
Total Water Requirements	**13,549.25**	**9,455.25**	**3,066.55**	**15,014.07**	**13,871.32**	**13,548.95**	**18,424.28**	**3,992.38**	**6,182.55**
Net Water Generation Rate (recycle - required)	**399**	**888**	**386**	**1,307**	**354**	**294**	**778**	**862**	**463**

MASSES02.XL5

Mass Flow (lb/hr)	OVERALL MASS BALANCES FOR 19 ITTS SYSTEMS (Including ASPEN modeling results)									
	C-2 Plasma w/ CO2 Retention	C-3 Plasma w/ Steam Gasification	D-1 Fixed Hearth Pyrolyzer	E-1 Thermal Desorption	F-1 Molten Salt Oxidation	G-1 Molten Metal	H-1 Steam Gasification	J-1 Joule-Heated Vitrification	K-1 Desorption w/ MEO	L-1 Desorption w/ SCWO
	WASTE INPUT									
MAIN THERMAL TREATMENT SUBSYSTEM (MTT)										
Combustible	660.4	660.4	660.4	660.4	660.4	660.4	660.4	660.4	50.7	50.7
Noncombustible	1,339.6	1,339.6				1,339.6		1,339.6		
Metal	149	149				617				
Aqueous Liquid									16	16
THERMAL DESORBER										
Combustible									609.7	609.7
Noncombustible				1,339.6					1,340	1,340
VITRIFIER										
Combustible										
Noncombustible			1,340		1,340		1,340			
Subtotal - MTT	**2,149**	**2,149**	**2,000**	**2,000**	**2,000**	**2,617**	**2,000**	**2,000**	**2,016**	**2,016**
AUXILIARY SUBSYSTEMS										
Metallic Waste (Surface Contamination)	468	468	468	468	468	0	468	468	468	468
Metallic Waste (Entrained Contamination)			149	149	149		149	149	149	149
Mercury	50	50	50	50	50	50	50	50	50	50
Lead Metal	26	26	26	26	26	26	26	26	26	26
Aqueous Waste	80	80	80	80	80	80	80	80	64	64
Special Waste	153	153	153	153	153	153	153	153	153	153
Halide and Sulfide salts	1	1	1	1	1	1	1	1	1	1
Subtotal - Auxiliary	**778**	**778**	**927**	**927**	**927**	**310**	**927**	**927**	**911**	**911**
Contaminated Soil (Can replace Soil, below)										
TOTAL WASTE INPUT	**2,927**	**2,927**	**2,927**	**2,927**	**2,927**	**2,927**	**2,927**	**2,927**	**2,927**	**2,927**

Mass Flow (lb/hr)	OVERALL MASS BALANCES FOR 19 ITTS SYSTEMS (including ASPEN modeling results)									
	C-2 Plasma w/ CO2 Retention	C-3 Plasma w/ Steam Gasification	D-1 Fixed Hearth Pyrolyzer	E-1 Thermal Desorption	F-1 Molten Salt Oxidation	G-1 Molten Metal	H-1 Steam Gasification	J-1 Joule-Heated Vitrification	K-1 Desorption w/ MEO	L-1 Desorption w/ SCWO
	A. PROCESS INPUTS									
MAIN THERMAL TREATMENT SUBSYSTEM (MTT)										
H2O		60	142	910			446			3,033
CH4				1						
O2	1,225		142			79		1,414		355
Air				7,766	6,120					
Air Inleakage			224	2,695						
Soil	482	484		54		524		498		
VITRIFIER										
Soil			499		500		498			
Water				10						
CH4				2						
O2			23	21	15		118			
Air				2						
SCC										
CH4	36		1	427	24		27	80		
O2	174		988							
Air			1982	8,858	496		559	1,662		
WATER										
Primary Quench	1732	1189	4225	10407	2114			2293		
Secondary Quench	427		393		659		751			
Primary Scrubber		2,259		1,864	4	467	1,765	2,254	902	
Secondary Scrubber					494		494			
OTHER										
NaOH		78		64	17	16	78	77	31	31
Na2CO3					121					
CaO	173		158			48				
Electrolyte(water & CoSO4)									1,036	
Input to Indirect Heater										
Air to Catalytic Oxidizer		10,254				10,429	6,000		2,960	196
CH4				46			155		59	59
Air				948			3,215		1,224	1,224
Subtotal - MTT	**4,249**	**14,324**	**8,777**	**34,074**	**10,564**	**11,563**	**14,106**	**8,278**	**6,212**	**4,898**
AUXILIARY SUBSYSTEMS										
METAL MELTING (MM)										
Air	0	0	25	25	25	0	25	25	25	25
Water	0	0	19	19	19	0	19	19	19	19
Soil + Flux	0	0	10	10	10	0	10	10	10	10
Subtotal - MM	**0**	**0**	**54**	**54**	**54**	**0**	**54**	**54**	**54**	**54**

Mass Flow (lb/hr)	OVERALL MASS BALANCES FOR 19 ITTS SYSTEMS (including ASPEN modeling results)									
	C-2 Plasma w/ CO2 Retention	C-3 Plasma w/ Steam Gasification	D-1 Fixed Hearth Pyrolyzer	E-1 Thermal Desorption	F-1 Molten Salt Oxidation	G-1 Molten Metal	H-1 Steam Gasification	J-1 Joule-Heated Vitrification	K-1 Desorption w/ MEO	L-1 Desorption w/ SCWO
LEAD RECOVERY (PbR)										
APC Water (use recycle)	14	14	14	14	14	14	14	14	14	14
Fuel										
Air	21	21	21	21	21	21	21	21	21	21
Blast Water	29	29	29	29	29	29	29	29	29	29
Soil	0.26	0.26	0.26	0.26	0.26	0.26	0.26	0.26	0.26	0.26
Subtotal - PbR	**64.26**	**64.26**	**64.26**	**64.26**	**64.26**	**64.26**	**64.26**	**64.26**	**64.26**	**64.26**
AQUEOUS WASTE TREATMENT (AQ)										
Resins & Activated Carbon	167.1	181.44	438.6	816.54	228.12	37.14	187.44	337.02	59.94	209.7
Additives (0.051 lb/lb input)	0	0	0	0	0	0	0	0	0	0
Rinse Water for 2° Stabilization	81.32	88.49	217.07	406.04	111.83	16.34	91.49	166.28	28.18	103.06
Subtotal - AQ	**167.1**	**181.44**	**438.6**	**816.54**	**228.12**	**37.14**	**187.44**	**337.02**	**59.94**	**209.7**
MERCURY AMALGAMATION (HgA)										
Additives (0.1 lb/lb)	5	5	5	5	5	5	5	5	5	5
Nitrogen (0.22 lb/lb)	11	11	11	11	11	11	11	11	11	11
Air (0.60 lb/lb)	30	30	30	30	30	30	30	30	30	30
Water (0.58 lb/lb)	29	29	29	29	29	29	29	29	29	29
Subtotal - HgA	**75**	**75**	**75**	**75**	**75**	**75**	**75**	**75**	**75**	**75**
TOTAL PROCESS INPUTS	4,555	14,645	9,409	35,084	10,985	11,739	14,487	8,808	6,465	5,301
	INTERNAL SYSTEM RECYCLE									
Scrubber Liquor from scrubber to aqueous waste treatment	2,705	2,944	7,230	13,529	3,722	539	3,044	5,537	935	3,431
Sludge from Pb recovery to aqueous waste treatment	0	0	0	0	0	0	0	0	0	0
Resins from aqueous waste treatment to thermal treatment	170	184	446	830	232	38	191	343	61	213
Hg amalgamation solids to thermal treatment	18	18	18	18	18	18	18	18	18	18
Water from metal decontamination to recycle	112	112	112	112	112	0	112	112	112	112
TOTAL INTERNAL SYSTEM RECYCLE (Not including recycle to thermal treatment)	**2,817**	**3,056**	**7,342**	**13,641**	**3,834**	**539**	**3,156**	**5,649**	**1,047**	**3,543**
TOTAL INPUT	10,300	20,628	19,678	51,652	17,747	15,206	20,570	17,385	10,440	11,771

Mass Flow (lb/hr)	OVERALL MASS BALANCES FOR 19 ITTS SYSTEMS (including ASPEN modeling results)									
	C-2 Plasma w/ CO2 Retention	C-3 Plasma w/ Steam Gasification	D-1 Fixed Hearth Pyrolyzer	E-1 Thermal Desorption	F-1 Molten Salt Oxidation	G-1 Molten Metal	H-1 Steam Gasification	J-1 Joule-Heated Vitrification	K-1 Desorption w/ MEO	L-1 Desorption w/ SCWO
	SYSTEM OUTPUT									
	B. MAIN THERMAL TREATMENT (MTT) SUBSYSTEM OUTPUT									
SOLIDS										
Slag	1,450	1,452	1,496	161	1,500	1,572	1,493	1,494		
Debris				1,051					1,550	1,550
Nonvitrified Ash										
Metal	170	170				613				
Trace Metals	4	4	4	1	4	4	4	4	1	1
Na2CO3					40					
NaCl/NaF					87					
HCl (50% in water)										
CaO	116		102							
CaCl2, CaSO4	113		113							
Subtotal - Solids	**1,853**	**1,626**	**1,715**	**1,213**	**1,631**	**2,189**	**1,497**	**1,498**	**1,551**	**1,551**
Main Thermal Treatment APC										
LIQUIDS & DISSOLVED GASES										
Scrubber Water	2,705	2,831	7,230	13,436	3,697	516	2,931	5,424	890	3,386
Dissolved salts		113		93	25	23	113	113	45	45
Dissolved gases										
O2	5		1	2				1		1
N2			10	13	4		1	3		
CO2		16		23	11	1	8	41	14	30
SO2					1		1	1		
Electrolyte(water & CoSO4)									1,036	
Subtotal - Liquids & Dissolved Gases	**2,710**	**2,960**	**7,241**	**13,567**	**3,738**	**540**	**3,054**	**5,583**	**1,985**	**3,462**
GASES										
O2	54	1,194	16	1,622	276	1,215	359	317	375	85
N2	1	7,865	163	14,809	5,071	8,000	5,030	1,272	2,270	150
CO2	1,352	1,237	1,244	2,351	1,330	1,351	1,306	1,402	308	292
H2O vapor	429	1,587	399	1,484	515	883	1,486	204	453	87
SO2		3		1	2	3	2	2		
Subtotal - Gases	**1,836**	**11,886**	**1,822**	**20,267**	**7,194**	**11,452**	**8,183**	**3,197**	**3,406**	**614**

MASSES02.XL5

Mass Flow (lb/hr)	C-2 Plasma w/ CO2 Retention	C-3 Plasma w/ Steam Gasification	D-1 Fixed Hearth Pyrolyzer	E-1 Thermal Desorption	F-1 Molten Salt Oxidation	G-1 Molten Metal	H-1 Steam Gasification	J-1 Joule-Heated Vitrification	K-1 Desorption w/ MEO	L-1 Desorption w/ SCWO
	OVERALL MASS BALANCES FOR 19 ITTS SYSTEMS (including ASPEN modeling results)									
INDIRECT-FIRED EXHAUST										
O2				38			130		49	49
N2				728			2467		939	939
CO2				125			425		162	162
H2O vapor				103			348		133	133
Subtotal - Indirect-fired exhaust	**0**	**0**	**0**	**994**	**0**	**0**	**3370**	**0**	**1283**	**1283**
TOTAL - MTT Subsystems Output	**6,399**	**16,472**	**10,778**	**36,041**	**12,563**	**14,181**	**16,104**	**10,278**	**8,225**	**6,910**
	AUXILIARY SUBSYSTEM OUTPUTS									
Metal Decontamination (MD)										
Clean Metal	463	463	463	463	463	0	463	463	463	463
Grit	5	5	5	5	5	0	5	5	5	5
Water	112	112	112	112	112	0	112	112	112	112
Subtotal - Metal Decon	**580**	**580**	**580**	**580**	**580**	**0**	**580**	**580**	**580**	**580**
Metal Melting										
Clean Metal	0	0	134	134	134	0	134	134	134	134
Treated Offgas	0	0	46	46	46	0	46	46	46	46
Slag	0	0	23	23	23	0	23	23	23	23
Subtotal - Metal Melting	**0**	**0**	**203**	**203**	**203**	**0**	**203**	**203**	**203**	**203**
Lead Recovery										
Clean Lead	20	20	20	20	20	20	20	20	20	20
Offgas	35	35	35	35	35	35	35	35	35	35
Water	29.7	29.7	29.7	29.7	29.7	29.7	29.7	29.7	29.7	29.7
Sludge	0.3	0.3	0.3	0.3	0.3	0.3	0.3	0.3	0.3	0.3
Lead Ingots	4.5	4.5	4.5	4.5	4.5	4.5	4.5	4.5	4.5	4.5
Slag	0.78	0.78	0.78	0.78	0.78	0.78	0.78	0.78	0.78	0.78
Subtotal - Lead Recovery	**90.28**	**90.28**	**90.28**	**90.28**	**90.28**	**90.28**	**90.28**	**90.28**	**90.28**	**90.28**
Primary Stabilization										
Offgas				34						
Subtotal - Primary Stab.	**0**	**0**	**0**	**34**	**0**	**0**	**0**	**0**	**0**	**0**

	OVERALL MASS BALANCES FOR 19 ITTS SYSTEMS (including ASPEN modeling results)									
Mass Flow (lb/hr)	C-2 Plasma w/ CO2 Retention	C-3 Plasma w/ Steam Gasification	D-1 Fixed Hearth Pyrolyzer	E-1 Thermal Desorption	F-1 Molten Salt Oxidation	G-1 Molten Metal	H-1 Steam Gasification	J-1 Joule-Heated Vitrification	K-1 Desorption w/ MEO	L-1 Desorption w/ SCWO
Aqueous Waste Treatment										
Treated Water (0.977 lb/lb aqueous waste, 0.899 lb/lb scrubber liquor)	2,509.96	2,724.82	6,577.93	12,240.73	3,424.24	562.72	2,814.72	5,055.92	903.09	3,147.00
Resins, Organics, Spent Carbon (0.061 lb/lb aqueous waste, 0.061 lb/lb scrubber liquor)	169.885	184.464	445.91	830.149	231.922	37.759	190.564	342.637	60.939	213.195
Treated Offgas (0.007 lb/lb aqueous waste)	0.56	0.56	0.56	0.56	0.56	0.56	0.56	0.56	0.448	0.448
Concentrated Liquids (0.007 lb/lb aqueous waste, 0.10 lb/lb scrubber liquor)	271.06	181.96	723.56	1,260.46	347.76	31.46	191.96	441.26	48.95	298.55
Salts from Concentrated Liquids	0.00	113.00	0.00	93.00	25.00	23.00	113.00	113.00	45.00	45.00
Rinse water from 2° stabilization	81.32	88.49	217.07	406.04	111.83	16.34	91.49	166.28	28.18	103.06
Subtotal - Aqueous Waste Treatment	**2,951.46**	**3,204.80**	**7,747.96**	**14,424.90**	**4,029.48**	**655.50**	**3,310.80**	**6,953.38**	**1,058.43**	**3,704.19**
Mercury Amalgamation										
Amalgamated Waste (0.21 lb/lb input)	10.5	10.5	10.5	10.5	10.5	10.5	10.5	10.5	10.5	10.5
Offgas (1.94 lb/lb input)	97	97	97	97	97	97	97	97	97	97
Contaminated Solids (0.35 lb/lb input)	17.5	17.5	17.5	17.5	17.5	17.5	17.5	17.5	17.5	17.5
Subtotal - Mercury Amalgamation	**125**	**125**	**125**	**125**	**125**	**125**	**125**	**125**	**125**	**125**
Special Waste	153	153	153	153	153	153	153	153	153	153
SUBTOTAL - Auxiliary Subsystem Outputs	3,899.74	4,153.08	8,899.24	15,610.43	5,180.76	1,023.78	4,462.08	7,104.66	2,209.71	4,855.47
SUBTOTAL - Offgas	1,968.56	12,018.56	2,000.56	20,479.81	7,372.56	11,584.56	8,361.56	3,375.56	3,584.45	792.45
TOTAL OUTPUT	10,298.74	20,625.08	19,677.24	51,651.43	17,743.76	15,204.78	20,566.08	17,382.66	10,434.71	11,765.47
MASS BALANCE (Input - Output)	**0.92**	**2.92**	**0.92**	**0.92**	**2.92**	**0.92**	**3.92**	**1.92**	**4.79**	**5.79**

Mass Flow (lb/hr)	OVERALL MASS BALANCES FOR 19 ITTS SYSTEMS (including ASPEN modeling results)									
	C-2 Plasma w/ CO2 Retention	C-3 Plasma w/ Steam Gasification	D-1 Fixed Hearth Pyrolyzer	E-1 Thermal Desorption	F-1 Molten Salt Oxidation	G-1 Molten Metal	H-1 Steam Gasification	J-1 Joule-Heated Vitrification	K-1 Desorption w/ MEO	L-1 Desorption w/ SCWO
Volume Reduction Ratio Calculation										
Densities (lb/ft3)										
Input Waste	64	64	64	64	64	64	64	64	64	64
Soil	67	67	67	67	67	67	67	67	67	67
Metal (Input)	26	26	26	26	26	26	26	26	26	26
Metal (Output)	480	480	480	480	480	480	480	480	480	480
Aqueous Liquid	62	62	62	62	62	62	62	62	62	62
Slag	187	187	187	187	187	187	187	187	187	187
Polymerized Salt	80	80	80	80	80	80	80	80	80	80
Polymerized Ash/Metal/Salt	94	94	94	94	94	94	94	94	94	94
Polymerized Lime	96.5	96.5	96.5	96.5	96.5	96.5	96.5	96.5	96.5	96.5
Grouted Debris	126.6	126.6	126.6	126.6	126.6	126.6	126.6	126.6	126.6	126.6
Stab Hg Amalgam	732.96	732.96	732.96	732.96	732.96	732.96	732.96	732.96	732.96	732.96
Volumetric Flow Rate Calculation										
Volume Solids In (ft3/hr)	45.73	45.73	45.73	45.73	45.73	45.73	45.73	45.73	45.73	45.73
Mass Slag Out (lb/hr)	1,450.78	1,452.78	1,519.78	184.78	1,523.78	1,572.78	1,516.78	1,517.78	23.78	23.78
Mass Nonvitrified Ash Out	0	0	0	0	0	0	0	0	0	0
Mass Special Waste (not stab)	153.00	153.00	153.00	153.00	153.00	153.00	153.00	153.00	153.00	153.00
Mass Residues from MD	5.00	5.00	5.00	5.00	5.00	0.00	5.00	5.00	5.00	5.00
Mass MTT Debris & PbR Sludge Out (lb/hr)	0.30	0.30	0.30	1,051.30	0.30	0.30	0.30	0.30	1,550.30	1,550.30
Mass Metal/Pb Out (lb/hr)clean	657.50	657.50	621.50	621.50	621.50	637.50	621.50	621.50	621.50	621.50
Mass Salts Out (lb/hr)	118.00	118.00	118.00	95.00	157.00	28.00	118.00	118.00	129.00	47.00
Mass Lime Out (lb/hr)	116	0	102	0	0	0	0	0	0	0
Mass Stab Hg Amalgam Out	10.50	10.50	10.50	10.50	10.50	10.50	10.50	10.50	10.50	10.50

	OVERALL MASS BALANCES FOR 19 ITTS SYSTEMS (including ASPEN modeling results)									
Mass Flow (lb/hr)	C-2 Plasma w/ CO2 Retention	C-3 Plasma w/ Steam Gasification	D-1 Fixed Hearth Pyrolyzer	E-1 Thermal Desorption	F-1 Molten Salt Oxidation	G-1 Molten Metal	H-1 Steam Gasification	J-1 Joule-Heated Vitrification	K-1 Desorption w/ MEO	L-1 Desorption w/ SCWO
Volume Slag Out (ft3/hr)	7.76	7.77	8.13	0.99	8.15	8.41	8.11	8.12	0.13	0.13
Vol Stab Nonvitrified Ash Out (ft3/hr)	0.00	0.00	0.00	0.00	0.00	0.00	0.00	0.00	0.00	0.00
Volume Special Wastes (not stabilized)(ft3/hr)	2.39	2.39	2.39	2.39	2.39	2.39	2.39	2.39	2.39	2.39
Vol Stab MD Residues Out (ft3/hr)	0.11	0.11	0.11	0.11	0.11	0.00	0.11	0.11	0.11	0.11
Volume Stab MTT Debris & PbR Sludge Out (ft3/hr)	0.01	0.01	0.01	24.91	0.01	0.01	0.01	0.01	36.74	36.74
Volume Metal/Pb Out (ft3/hr)	1.37	1.37	1.29	1.29	1.29	1.33	1.29	1.29	1.29	1.29
Volume Stabilized Salts Out (ft3/hr)	2.45	2.95	2.45	2.38	3.93	0.70	2.95	2.95	3.23	1.18
Volume Stabilized Lime Out (ft3/hr)	2.40	0.00	2.11	0.00	0.00	0.00	0.00	0.00	0.00	0.00
Vol Stab Hg Amalgam Out	0.01	0.01	0.01	0.01	0.01	0.01	0.01	0.01	0.01	0.01
Total Volume Solids Out to Disposal(ft3/hr) (includes 1:1 polymer:ash, 1:1 polymer:salt, 2:1 grout:debris)	15.1	13.2	15.2	30.8	14.6	11.5	13.6	13.6	42.6	40.6
Volume Metal to Recycle (ft3/hr)	1.37	1.37	1.29	1.29	1.29	1.33	1.29	1.29	1.29	1.29
Waste Volume Reduction Ratio (In/Out)	3.02	3.46	3.01	1.49	3.13	3.97	3.37	3.37	1.07	1.13
Mass Processed Waste Out (lb/hr)										
Slag	1450.78	1452.78	1519.78	184.78	1523.78	1572.78	1516.78	1517.78	23.78	23.78
Stabilized Ash (1:1 polymer:ash)	0.00	0.00	0.00	0.00	0.00	0.00	0.00	0.00	0.00	0.00
Special Waste	153.00	153.00	153.00	153.00	153.00	153.00	153.00	153.00	153.00	153.00
Stabilized MD Residue (1:1 polymer:residue)	10.00	10.00	10.00	10.00	10.00	0.00	10.00	10.00	10.00	10.00
Stabilized Debris & PbR Sludge (2:1 grout:debris)	0.90	0.90	0.90	3153.90	0.90	0.90	0.90	0.90	4650.90	4650.90
Stabilized Salts (1:1 polymer:salt)	236.00	236.00	236.00	190.00	314.00	56.00	236.00	236.00	258.00	94.00
Stabilized Lime (1:1 polymer:lime)	232.00	0.00	204.00	0.00	0.00	0.00	0.00	0.00	0.00	0.00
Hg Amalgam	10.50	10.50	10.50	10.50	10.50	10.50	10.50	10.50	10.50	10.50
Total Mass Processed Wastes Out (lb/hr)	2093.18	1863.18	2134.18	3702.18	2012.18	1793.18	1927.18	1928.18	5106.18	4942.18
Waste Mass Reduction Ratio (In/Out)	1.40	1.57	1.37	0.79	1.46	1.63	1.52	1.62	0.57	0.59

MASSES02.XL5

Mass Flow (lb/hr)	OVERALL MASS BALANCES FOR 19 ITTS SYSTEMS (including ASPEN modeling results)									
	C-2 Plasma w/ CO2 Retention	C-3 Plasma w/ Steam Gasification	D-1 Fixed Hearth Pyrolyzer	E-1 Thermal Desorption	F-1 Molten Salt Oxidation	G-1 Molten Metal	H-1 Steam Gasification	J-1 Joule-Heated Vitrification	K-1 Desorption w/ MEO	L-1 Desorption w/ SCWO
	Calculated Liquid Water Generation (lb/hr)									
Inputs to Aqueous Waste Treatment System										
Metal Decontamination Water	112.00	112.00	112.00	112.00	112.00	0.00	112.00	112.00	112.00	112.00
Lead Recovery Blast Water	29.70	29.70	29.70	29.70	29.70	29.70	29.70	29.70	29.70	29.70
Aqueous Waste	80.00	80.00	80.00	80.00	80.00	80.00	80.00	80.00	64.00	64.00
Rinse Water from 2° stabilization	81.32	88.49	217.07	406.04	111.83	16.34	91.49	166.28	28.18	103.06
Scrubber water	2,705.00	2,831.00	7,230.00	13,436.00	3,697.00	516.00	2,931.00	5,424.00	890.00	3,386.00
Total Input to Aqueous Treatment System (available for recycle)	**3,008.02**	**3,141.19**	**7,668.77**	**14,063.74**	**4,030.53**	**642.04**	**3,244.19**	**5,811.98**	**1,123.88**	**3,694.76**
Total Water Requirements										
Water input to 1°	0.00	60.00	142.00	910.00	0.00	0.00	446.00	0.00	0.00	3,033.00
1° and 2° Quench water	2,159.00	1,189.00	4,618.00	10,407.00	2,773.00	0.00	751.00	2,293.00	0.00	0.00
1° and 2° Scrubber water	0.00	2,259.00	0.00	1,864.00	498.00	467.00	2,259.00	2,254.00	902.00	0.00
Rinse Water for 2° stabilization	81.32	88.49	217.07	406.04	111.83	16.34	91.49	166.28	28.18	103.06
Metal Decontamination Water	112.00	112.00	112.00	112.00	112.00	0.00	112.00	112.00	112.00	112.00
Mercury Amalgamation Water	29.00	29.00	29.00	29.00	29.00	29.00	29.00	29.00	29.00	29.00
Lead Recovery, Blast and APC	43.00	43.00	43.00	43.00	43.00	43.00	43.00	43.00	43.00	43.00
Total Water Requirements	**2,424.32**	**3,780.49**	**5,161.07**	**13,771.04**	**3,566.83**	**555.34**	**3,731.49**	**4,897.28**	**1,114.18**	**3,320.06**
Net Water Generation Rate (recycle - required)	**584**	**-639**	**2,508**	**293**	**464**	**87**	**-487**	**915**	**10**	**375**

7. SUMMARY AND CONCLUSIONS

Nineteen systems encompassing several incineration design options were developed in the study. For Phase 2 of the study, the ASPEN PLUS process simulation code was used. However, only the three most complex and energy intensive subsystems were modeled with ASPEN PLUS for each of the systems: main and secondary thermal treatment, main air pollution control, and metal melting. The objective of the modeling was to obtain mass and energy balances of the major components entering and exiting the process. Modeling of trace materials, such as pollutants and radioactive isotopes, were beyond the present scope, and were generally not tracked. The modeling results yielded information on the types and quantities of input material needed to process the waste, as well as the nature and amounts of the output products generated by each of the processes. Because an all-inclusive process simulation code was used for this study, the existing models can be expanded to investigate (and automate the calculation of) other system characteristics, for example, more detailed chemical reactions, tracing of minor constituents such as pollutants and radioactive isotopes, and cost studies.

For those subsystems not analyzed with the code, other calculations, from the Phase 1 task (updated accordingly), were used to arrive at the mass balances. These were combined with the modeling results to arrive at the overall mass balances. The results are presented in Table 6-1. The resulting mass and volume reduction ratios for the wastes form a basis for comparison of the nineteen diverse technologies covered in the study. Volume reduction ratios exceeded 1.00 in every case, indicating a net reduction. Values ranged from 1.07 for System K-1 (Desorption w/ MEO) to 4.27 for System G-1 (Molten Metal), and averaged 2.87 for all systems. Mass reduction ratios were as low as about 0.6 for systems K-1 and L-1 (Desorption w/ SCWO), meaning that more processed wastes left the facilities than raw wastes entered. The maximum mass reduction ratio was 1.73 for system G-1, and the average was 1.33 for all systems.

Energy (heating) requirements for the most energy intensive unit operations are shown in Table 6-2. Energy usage varied by an order of magnitude with the highest being System A-6 (Rotary Kiln w/ Maximum Recycling) at 35.7 MMBtu/hr, and the lowest System B-1 (Pyrolyzer) at 3.35 MMBtu/hr.

Energy costs varied by a factor of twenty, with the highest again being System A-6 at $33.0 million over twenty years (1994 dollars), and the lowest, System A-5 (Rotary Kiln w/ Polymer Stabilization) at $1.6 million. Although System A-5 uses almost three times as much primary energy as the lowest consuming system, B-1, its usage is predominately in the form of natural gas which is currently much cheaper than electricity, and thus has the lowest costs. As discussed in Reference (2), where all costs are presented, the energy costs represented only a minor portion of the total lifecyle costs of any of the systems.

Even though the accuracy and reliability of the assumptions used in this study may be subject for debate, the fact that they were uniformly applied allows a direct comparison of the systems considered.

The mass and energy balance results were only one of many factors of interest to the ITTS study. The complete comparison process consisted of many other considerations, including operational requirements, conceptual design layouts, planning life-cycle cost estimates, and areas requiring further development. The overall comparison is reported in Reference (2). There, all factors are considered, and recommendations are made as to the preferred technology based on today's knowledge.

8. REFERENCES

1. Feizollahi, F., W. J. Quapp, H. G. Hempill, F. J. Groffie, *Integrated Thermal Treatment System Study - Phase 1 Results*, EGG-MS-11211, July 1994

2. Feizollahi, F., W. J. Quapp, *Integrated Thermal Treatment System Study, Phase 2 Results*, Third Draft, January 1995

3. ASPEN PLUS, Version 9.1-3 for PC's, Cambridge, MA; Aspen Technology, Inc., 1994

4. Huebner, T. L., et al, *Quantities and Characteristics of the Contact-Handled Low-Level Mixed Waste Streams in the DOE Complex*, EGG-MS-11303, August 1994

5. L. L. Oden, et al, *Baseline Tests for Arc Melter Vitrification of INEL Buried Wastes, Vol I: Facility Description and Summary Data Report*, EGG-WTD-10981, Table 3-9(a), November 1993

6. Microsoft Corp., Microsoft Excel, Version 5.0, 1993.

Appendix A

Model Process Flow Diagrams (MPFDs)
and
Assumption and Energy Balance Tables

System A-1: Conventional Rotary Kiln, Air Combustion Gas, Dry-Wet APC (Baseline System)

Table A-1. Page 1 of 2

ASSUMPTIONS and ENERGY BALANCES for BASELINE ROTARY KILN, System A-1

GENERAL COMMENTS: RGIBBS units calculate chemical and phase equilibrium with some restrictions, not all stated here. For detailed information refer to the ASPEN PLUS Release 9 input file. Chemical reactions and phase changes for some species are neglected. "Volatile" trace metals As, Cd, Hg, and Se are allowed to change phase, while Ba, Cr, Pb, and Ag are restricted to the solid phase. The inlet fuel mixture streams in this system are composed of CH4 and 20 % excess air. Design Spec's on air and oxygen flow consider both free oxygen and that bound in organics.

Block Name (ASPEN Type)	Outlet Temp (F)	Heat Duty (MMBtu/hr)	Description and Assumptions
KILN (RGIBBS)	1600	-0.361	Conventional rotary kiln. Accepts combustible and non-combustible wastes. CH4-fueled with air as oxidant. Heat losses assumed to be 5% of the sensible heat of the products. Includes fixed air leakage through seals. Chemical and phase equilibrium of Fe and Fe3O4 are restricted. Design Spec QKILN: Vary either inlet fuel mixture flow (if heat is needed) or inlet water flow (if cooling is needed) such that heat duty is 5% of that calculated for unit Q1. Design Spec OXI: Vary inlet air flow in stream AIR such that total inlet oxygen flow (minus that used by the CH4) is twice the outlet oxygen flow (100% excess). Design Spec SOILH2O: Vary inlet soil feed rate (substream MIXED, 10% of total flow) such that it is 1/30 the magnitude of the SLAG stream (ash-to-gross soil ratio of 2:1). Design Spec SOILSOL: Vary inlet soil feed rate (substream CISOLID, 90% of total flow) such that it is 1/3.333 the magnitude of the SLAG stream (ash-to-gross soil ratio of 2:1).
DUPL1 (DUPL)	1600	0	A stream duplicator block used to send a copy of the KILN outlet stream to the dummy unit Q1.
Q1 (RGIBBS)	68	-7.229	Dummy unit. This calculates chemical equilibrium at 1600 F, identical to unit KILN, but has an outlet temperature of 68 F, thus yielding an estimate of the sensible heat of the products of unit KILN.
KILNSEP (SEP)	1600	-0.485	2-way separation of KILN products: 80% of metals and oxides go to VITRIFY (via stream ASH). Remainder, including 100% of volatile trace metals and vapors, sent to SCC. Stream ASH flashed to 68 F to represent storage of material before use.
SCC (RGIBBS)	2200	-0.790	Secondary combustion unit. CH4-fueled with air as oxidant. Heat losses assumed to be 5% of the sensible heat of the products. Chemical and phase equilibrium of Fe and Fe3O4 are restricted. Design Spec QSCC: Vary inlet fuel mixture flow such that heat duty is 5% of that calculated for unit Q2.
DUPL2 (DUPL)	2200	0	A stream duplicator block used to send a copy of the SCC outlet stream to the dummy unit Q2.

Table A-1.

ASSUMPTIONS and ENERGY BALANCES for BASELINE ROTARY KILN, System A-1

GENERAL COMMENTS: RGIBBS units calculate chemical and phase equilibrium with some restrictions, not all stated here. For detailed information refer to the ASPEN PLUS Release 9 input file. Chemical reactions and phase changes for some species are neglected. "Volatile" trace metals As, Cd, Hg, and Se are allowed to change phase, while Ba, Cr, Pb, and Ag are restricted to the solid phase. The inlet fuel mixture streams in this system are composed of CH4 and 20 % excess air. Design Spec's on air and oxygen flow consider both free oxygen and that bound in organics.

Block Name (ASPEN Type)	Outlet Temp (F)	Heat Duty (MMBtu/hr)	Description and Assumptions
Q2 (RGIBBS)	68	-15.791	Dummy unit. This calculates chemical equilibrium at 2200 F, identical to unit SCC, but has an outlet temperature of 68 F, thus yielding an estimate of the sensible heat of the products of unit SCC.
QUENCH (RGIBBS)	350	0	Quenching of the exhaust of the SCC. No losses included. Formation of CH4, C, S and Cl2 is restricted. Chemical and phase equilibrium of Fe and Fe3O4 are restricted. Design Spec QQUENCH: Vary inlet water flow rate to achieve zero heat duty.
BAGHOUSE (SEP)	350	-0.017	3-way separation of QUENCH products. Vapors sent to SCRUB, volatile trace metals exit system (via stream HGPLUS), and remainder (soil + ash) recycles to VITRIFY (via FLYASH). Stream FLYASH flashed to 68 F to represent storage of material before use.
SCRUB (RGIBBS)	120	-13.844	Wet acid scrubber. Design Spec SCRUBH2O: Vary inlet water flow such that inlet liquid water flow equals 20 times outlet dissolved salts (5% TDS), with a minimum value equal to inlet NaOH flow (50% soln). Design Spec NAOH: Vary inlet NaOH flow such that inlet NaOH flow equals 100 times outlet NaOH flow (1% excess).
L-V-SEP (FLASH2)	120	0	2-way separation of SCRUB products. Flash calculation to separate liquid and vapor.
VITRIFY (RGIBBS)	3000	+1.491	Vitrifier. Heat duty does not include heat losses. Feed material enters at 68 F. Chemical and phase equilibrium of Fe and Fe3O4 are restricted.
L-V-SEP2 (FLASH2)	3000	0	2-way separation of VITRIFY products. Flash calculation to separate liquid and vapor. No vapor expected.
MELTER (RGIBBS)	3000	+0.120	Metal melter. Accepts metals with fixed contamination. Electrically heated with heat losses not included.

System A-2: Conventional Rotary Kiln, Oxygen Combustion Gas

Table A-2.

ASSUMPTIONS and ENERGY BALANCES for ROTARY KILN W/ OXYGEN, System A-2

GENERAL COMMENTS: RGIBBS units calculate chemical and phase equilibrium with some restrictions, not all stated here. For detailed information refer to the ASPEN PLUS Release 9 input file. Chemical reactions and phase changes for some species are neglected. "Volatile" trace metals As, Cd, Hg, and Se are allowed to change phase, while Ba, Cr, Pb, and Ag are restricted to the solid phase. The inlet fuel mixture streams in this system are composed of CH4 and 20 % excess ***oxygen***. Design Spec's on air and oxygen flow consider both free oxygen and that bound in organics.

Block Name (ASPEN Type)	Outlet Temp (F)	Heat Duty (MMBtu/hr)	Description and Assumptions
KILN (RGIBBS)	1600	-0.367	Conventional rotary kiln. Accepts combustible and non-combustible wastes. CH4-fueled with oxygen as oxidant. Heat losses assumed to be 5% of the sensible heat of the products. Includes fixed air leakage through seals. Chemical and phase equilibrium of Fe and Fe3O4 are restricted. Design Spec QKILN: Vary either inlet fuel mixture flow (if heat is needed) or inlet water flow (if cooling is needed) such that heat duty is 5% of that calculated for unit Q1. Design Spec OXI: Vary inlet oxygen flow in stream OXYGEN such that total inlet oxygen flow (minus that used by the CH4) is twice the outlet oxygen flow (100% excess). Design Spec SOILH2O: Vary inlet soil feed rate (substream MIXED, 10% of total flow) such that it is 1/30 the magnitude of the SLAG stream (ash-to-gross soil ratio of 2:1). Design Spec SOILSOL: Vary inlet soil feed rate (substream CISOLID, 90% of total flow) such that it is 1/3.333 the magnitude of the SLAG stream (ash-to-gross soil ratio of 2:1).
DUPL1 (DUPL)	1600	0	A stream duplicator block used to send a copy of the KILN outlet stream to the dummy unit Q1.
Q1 (RGIBBS)	68	-7.340	Dummy unit. This calculates chemical equilibrium at 1600 F, identical to unit KILN, but has an outlet temperature of 68 F, thus yielding an estimate of the sensible heat of the products of unit KILN.
KILNSEP (SEP)	1600	-0.485	2-way separation of KILN products: 80% of metals and oxides go to VITRIFY (via stream ASH). Remainder, including 100% of volatile trace metals and vapors, sent to SCC. Stream ASH flashed to 68 F to represent storage of material.
SCC (RGIBBS)	2200	-0.481	Secondary combustion unit. CH4-fueled with oxygen as oxidant. Heat losses assumed to be 5% of the sensible heat of the products. Chemical and phase equilibrium of Fe and Fe3O4 are restricted. Design Spec QSCC: Vary inlet fuel mixture flow such that heat duty is 5% of that calculated for unit Q2.
DUPL2 (DUPL)	2200	0	A stream duplicator block used to send a copy of the SCC outlet stream to the dummy unit Q2.

Table A-2.

ASSUMPTIONS and ENERGY BALANCES for ROTARY KILN W/ OXYGEN, System A-2

GENERAL COMMENTS: RGIBBS units calculate chemical and phase equilibrium with some restrictions, not all stated here. For detailed information refer to the ASPEN PLUS Release 9 input file. Chemical reactions and phase changes for some species are neglected. "Volatile" trace metals As, Cd, Hg, and Se are allowed to change phase, while Ba, Cr, Pb, and Ag are restricted to the solid phase. The inlet fuel mixture streams in this system are composed of CH4 and 20 % excess ***oxygen***. Design Spec's on air and oxygen flow consider both free oxygen and that bound in organics.

Block Name (ASPEN Type)	Outlet Temp (F)	Heat Duty (MMBtu/hr)	Description and Assumptions
Q2 (RGIBBS)	68	-9.614	Dummy unit. This calculates chemical equilibrium at 2200 F, identical to unit SCC, but has an outlet temperature of 68 F, thus yielding an estimate of the sensible heat of the products of unit SCC.
QUENCH (RGIBBS)	350	0	Quenching of the exhaust of the SCC. No losses included. Formation of CH4, C, S and Cl2 is restricted. Chemical and phase equilibrium of Fe and Fe3O4 are restricted. Design Spec QQUENCH: Vary inlet water flow rate to achieve zero heat duty.
BAGHOUSE (SEP)	350	-0.017	3-way separation of QUENCH products. Vapors sent to SCRUB, volatile trace metals exit system (via stream HGPLUS), and remainder (soil + ash) recycles to VITRIFY (via FLYASH). Stream FLYASH flashed to 68 F to represent storage of material.
SCRUB (RGIBBS)	120	-8.916	Wet acid scrubber. Design Spec SCRUBH2O: Vary inlet water flow such that inlet liquid water flow equals 20 times outlet dissolved salts (5% TDS), with minimum value equal to inlet NaOH flow (50% soln). Design Spec NAOH: Vary inlet NaOH flow such that inlet NaOH flow equals 100 times outlet NaOH flow (1% excess).
L-V-SEP (FLASH2)	120	0	2-way separation of SCRUB products. Flash calculation to separate liquid and vapor.
VITRIFY (RGIBBS)	3000	+1.491	Vitrifier. Heat duty does not include heat losses. Feed material enters at 68 F. Chemical and phase equilibrium of Fe and Fe3O4 are restricted.
L-V-SEP2 (FLASH2)	3000	0	2-way separation of VITRIFY products. Flash calculation to separate liquid and vapor. No vapor expected.
MELTER (RGIBBS)	3000	+0.120	Metal melter. Accepts metals with fixed contamination. Electrically heated with heat losses not included.

System A-3: Conventional Rotary Kiln, Wet Air Pollution Control Subsystem

Table A-3.

ASSUMPTIONS and ENERGY BALANCES for ROTARY KILN W/ WET APC, System A-3

GENERAL COMMENTS: RGIBBS units calculate chemical and phase equilibrium with some restrictions, not all stated here. For detailed information refer to the ASPEN PLUS Release 9 input file. Chemical reactions and phase changes for some species are neglected. "Volatile" trace metals As, Cd, Hg, and Se are allowed to change phase, while Ba, Cr, Pb, and Ag are restricted to the solid phase. The inlet fuel mixture streams in this system are composed of CH4 and 20 % excess air. Design Spec's on air and oxygen flow consider both free oxygen and that bound in organics.

Block Name (ASPEN Type)	Outlet Temp (F)	Heat Duty (MMBtu/hr)	Description and Assumptions
KILN (RGIBBS)	1600	-0.362	Conventional rotary kiln. Accepts combustible and non-combustible wastes. CH4-fueled with air as oxidant. Heat losses assumed to be 5% of the sensible heat of the products. Includes fixed air leakage through seals. Chemical and phase equilibrium of Fe and Fe3O4 are restricted. Design Spec QKILN: Vary either inlet fuel mixture flow (if heat is needed) or inlet water flow (if cooling is needed) such that heat duty is 5% of that calculated for unit Q1. Design Spec OXI: Vary inlet air flow in stream AIR such that total inlet oxygen flow (minus that used by the CH4) is twice the outlet oxygen flow (100% excess). Design Spec SOILH2O: Vary inlet soil feed rate (substream MIXED, 10% of total flow) such that it is 1/30 the magnitude of the SLAG stream (ash-to-gross soil ratio of 2:1). Design Spec SOILSOL: Vary inlet soil feed rate (substream CISOLID, 90% of total flow) such that it is 1/3.333 the magnitude of the SLAG stream (ash-to-gross soil ratio of 2:1).
DUPL1 (DUPL)	1600	0	A stream duplicator block used to send a copy of the KILN outlet stream to the dummy unit Q1.
Q1 (RGIBBS)	68	-7.242	Dummy unit. This calculates chemical equilibrium at 1600 F, identical to unit KILN, but has an outlet temperature of 68 F, thus yielding an estimate of the sensible heat of the products of unit KILN.
KILNSEP (SEP)	1600	-0.450	2-way separation of KILN products: 80% of metals and oxides go to VITRIFY (via stream ASH). Remainder, including 100% of volatile trace metals and vapors, sent to SCC. Stream ASH flashed to 68 F to represent storage of material before use.
SCC (RGIBBS)	2200	-0.793	Secondary combustion unit. CH4-fueled with air as oxidant. Heat losses assumed to be 5% of the sensible heat of the products. Chemical and phase equilibrium of Fe and Fe3O4 are restricted. Design Spec QSCC: Vary inlet fuel mixture flow such that heat duty is 5% of that calculated for unit Q2.
DUPL2 (DUPL)	2200	0	A stream duplicator block used to send a copy of the SCC outlet stream to the dummy unit Q2.

Table A-3.

ASSUMPTIONS and ENERGY BALANCES for ROTARY KILN W/ WET APC, System A-3

GENERAL COMMENTS: RGIBBS units calculate chemical and phase equilibrium with some restrictions, not all stated here. For detailed information refer to the ASPEN PLUS Release 9 input file. Chemical reactions and phase changes for some species are neglected. "Volatile" trace metals As, Cd, Hg, and Se are allowed to change phase, while Ba, Cr, Pb, and Ag are restricted to the solid phase. The inlet fuel mixture streams in this system are composed of CH4 and 20 % excess air. Design Spec's on air and oxygen flow consider both free oxygen and that bound in organics.

Block Name (ASPEN Type)	Outlet Temp (F)	Heat Duty (MMBtu/hr)	Description and Assumptions
Q2 (RGIBBS)	68	-15.866	Dummy unit. This calculates chemical equilibrium at 2200 F, identical to unit SCC, but has an outlet temperature of 68 F, thus yielding an estimate of the sensible heat of the products of unit SCC.
SCRUB (RGIBBS)	120	-14.336	Wet APC system. Full quench/hydrosonic scrubber/packed tower. Design Spec SCRUBH2O: Vary inlet water flow such that inlet liquid water flow equals 20 times outlet dissolved salts (5% TDS), with a minimum value equal to inlet NaOH flow (50% soln). Design Spec NAOH: Vary inlet NaOH flow such that inlet NaOH flow equals 100 times outlet NaOH flow (1% excess).
SOLIDSEP (SEP)	120	0	3-way separation of QUENCH products to identify breakdown of components. Vapors sent to L-V-SEP, volatile trace metals exit system (via stream HGPLUS), and remainder (soil + ash) exits separately via FLYASH.
L-V-SEP (FLASH2)	120	0	2-way separation of liquid/vapor SCRUB products. Flash calculation to separate liquid and vapor.
VITRIFY (RGIBBS)	3000	+1.116	Vitrifier. Heat duty does not include heat losses. Feed material enters at 68 F. Chemical and phase equilibrium of Fe and Fe3O4 are restricted.
L-V-SEP2 (FLASH2)	3000	0	2-way separation of VITRIFY products. Flash calculation to separate liquid and vapor. No vapor expected.
MELTER (RGIBBS)	3000	+0.120	Metal melter. Accepts metals with fixed contamination. Electrically heated with heat losses not included.

System A-4: Conventional Rotary Kiln, CO_2 Retention

Table A-4.

ASSUMPTIONS and ENERGY BALANCES for ROTARY KILN W/ CO_2 RETENTION, System A-4

GENERAL COMMENTS: RGIBBS units calculate chemical and phase equilibrium with some restrictions, not all stated here. For detailed information refer to the ASPEN PLUS Release 9 input file. Chemical reactions and phase changes for some species are neglected. "Volatile" trace metals As, Cd, Hg, and Se are allowed to change phase, while Ba, Cr, Pb, and Ag are restricted to the solid phase. The inlet fuel mixture streams in this system are composed of CH4 and 20 % excess ***oxygen***. Design Spec's on air and oxygen flow consider both free oxygen and that bound in organics.

Block Name (ASPEN Type)	Outlet Temp (F)	Heat Duty (MMBtu/hr)	Description and Assumptions
KILN (RGIBBS)	1600	-0.685	Conventional rotary kiln. Accepts combustible and non-combustible wastes. CH4-fueled with oxygen as oxidant. Heat losses assumed to be 5% of the sensible heat of the products. Includes fixed air leakage through seals. Chemical and phase equilibrium of Fe and Fe3O4 are restricted. Design Spec QKILN1: Vary either inlet fuel mixture flow (if heat is needed) or inlet water flow (if cooling is needed) such that heat duty is 5% of that calculated for unit Q1. Design Spec OXYGEN: Vary inlet oxygen flow in stream OXYGEN such that total inlet oxygen flow (minus that used by the CH4) is twice the outlet oxygen flow (100% excess). Design Spec SOILH2O: Vary inlet soil feed rate (substream MIXED, 10% of total flow) such that it is 1/30 the magnitude of the SLAG stream (ash-to-gross soil ratio of 2:1). Design Spec SOILSOL: Vary inlet soil feed rate (substream CISOLID, 90% of total flow) such that it is 1/3.333 the magnitude of the SLAG stream (ash-to-gross soil ratio of 2:1).
DUPL1 (DUPL)	1600	0	A stream duplicator block used to send a copy of the KILN outlet stream to the dummy unit Q1.
Q1 (RGIBBS)	68	-13.704	Dummy unit. This calculates chemical equilibrium at 1600 F, identical to unit KILN, but has an outlet temperature of 68 F, thus yielding an estimate of the sensible heat of the products of unit KILN.
KILNSEP (SEP)	1600	-0.485	2-way separation of KILN products: 80% of metals and oxides go to VITRIFY (via stream ASH). Remainder, including 100% of volatile trace metals and vapors, sent to SCC. Stream ASH flashed to 68 F to represent storage of material before use.
SCC (RGIBBS)	2200	-1.031	Secondary combustion unit. CH4-fueled with oxygen as oxidant. Heat losses assumed to be 5% of the sensible heat of the products. Chemical and phase equilibrium of Fe and Fe3O4 are restricted. Design Spec QSCC: Vary inlet fuel mixture flow such that heat duty is 5% of that calculated for unit Q2.
DUPL2 (DUPL)	2200	0	A stream duplicator block used to send a copy of the SCC outlet stream to the dummy unit Q2.

Table A-4.

ASSUMPTIONS and ENERGY BALANCES for ROTARY KILN W/ CO_2 RETENTION, System A-4

GENERAL COMMENTS: RGIBBS units calculate chemical and phase equilibrium with some restrictions, not all stated here. For detailed information refer to the ASPEN PLUS Release 9 input file. Chemical reactions and phase changes for some species are neglected. "Volatile" trace metals As, Cd, Hg, and Se are allowed to change phase, while Ba, Cr, Pb, and Ag are restricted to the solid phase. The inlet fuel mixture streams in this system are composed of CH4 and 20 % excess ***oxygen***. Design Spec's on air and oxygen flow consider both free oxygen and that bound in organics.

Block Name (ASPEN Type)	Outlet Temp (F)	Heat Duty (MMBtu/hr)	Description and Assumptions
Q2 (RGIBBS)	68	-20.626	Dummy unit. This calculates chemical equilibrium at 2200 F, identical to unit SCC, but has an outlet temperature of 68 F, thus yielding an estimate of the sensible heat of the products of unit SCC.
QUENCH (RGIBBS)	350	0	Quenching of the exhaust of the SCC. No losses included. Formation of CH4, C, S and Cl2 is restricted. Chemical and phase equilibrium of Fe and Fe3O4 are restricted. Design Spec QQUENCH: Vary inlet water flow rate to achieve zero heat duty.
BAGHOUSE (SEP)	350	-0.017	3-way separation of QUENCH products. Vapors sent to SCRUB, volatile trace metals exit system (via stream HGPLUS), and remainder (soil + ash) recycles to VITRIFY (via FLYASH). Stream FLYASH flashed to 68 F to represent storage of material before use.
DRYSCRUB (RGIBBS)	350	-0.096	Dry scrubber. Chemical equilibrium calculated for conversion of CaO to CaSO4 and CaCl2, with all volatiles in the system participating. SO2 is fully converted (not included in the product list). Heat duty does not include any losses. Water used to slake the lime is not included in the model. Design Spec SCRUB: Vary the specified fractional flow split of unit SPLIT (between 0 and 0.1) such that the inlet CaO mole flow to DRYSCRUB is equal to the inlet mole flow of the SO2 plus half the inlet mole flow of the HCl.
SCRUBSEP (SEP)	350	0	2-way separation of DRYSCRUB products. Vapors sent to CO2-ABS and remainder exits system.
CO2-ABS (RSTOIC)	1200	+8.523	Restricted chemical reaction combining CO2 and CaO to form CaCO3, assuming 100% utilization of the CO2. Heat duty does not include any losses.
ABSSEP (SEP)	1200	0	2-way separation of CO2-ABS products. Vapors sent to FLASH. Remainder, consisting only of CaCO3, sent to CO2-DES.
FLASH (FLASH2)	90	-31.471	1200 F inlet stream flashed at 90 F to separate liquid and vapor. Heat duty does not include any losses. Heat removed by an unspecified indirect heat exchange process.
EX-SPLIT (FSPLIT)	90	0	A split of the vapor stream exiting FLASH (predominately oxygen), with 90% recycled to PLENUM and 10% exiting system.

Table A-4.

ASSUMPTIONS and ENERGY BALANCES for ROTARY KILN W/ CO_2 RETENTION, System A-4

GENERAL COMMENTS: RGIBBS units calculate chemical and phase equilibrium with some restrictions, not all stated here. For detailed information refer to the ASPEN PLUS Release 9 input file. Chemical reactions and phase changes for some species are neglected. "Volatile" trace metals As, Cd, Hg, and Se are allowed to change phase, while Ba, Cr, Pb, and Ag are restricted to the solid phase. The inlet fuel mixture streams in this system are composed of CH4 and 20 % excess ***oxygen***. Design Spec's on air and oxygen flow consider both free oxygen and that bound in organics.

Block Name (ASPEN Type)	Outlet Temp (F)	Heat Duty (MMBtu/hr)	Description and Assumptions
CO2-DES (RGIBBS)	1700	+5.755	Desorption of the CO2 from CaCO3, producing CaO. Heat duty does not include heat losses.
CO2-SEP (SEP)	1700	-1.326	2-way separation of CO2-DES products. CO2 is sent to GASQUENC and remainder, consisting only of CaO, sent to SPLIT. CaO (stream CAO-OUT) is flashed to 68 F at outlet to represent storage of the product before use.
SPLIT (FSPLIT)	68	0	A split of the solids stream from the separator CO2-SEP, recycling 90% of the CaO back to CO2-ABS. The remaining 10% is split between that going to DRYSCRUB for Cl2 and S removal (1.5%), and the rest exiting system to stabilization (8.5%).
CAOMIXER (MIXER)	68	0	Mixing of the recycled CaO with make-up CaO. Design Spec CAO: Vary inlet flow of make-up CaO to achieve an equal molar flow rate between the CO2 and the CaO as they enter the absorber (to produce CaCO3).
GASQUENC (RGIBBS)	350	0	Quenching of the 1700 F CO2 exhaust stream with water. No losses included. Design Spec QQUENCH2: Vary inlet water flow rate to achieve zero heat duty.
VITRIFY (RGIBBS)	3000	+1.491	Vitrifier. Heat duty does not include heat losses. Feed material enters at 68 F. Chemical and phase equilibrium of Fe and Fe3O4 are restricted.
L-V-SEP2 (FLASH2)	3000	0	2-way separation of VITRIFY products. Flash calculation to separate liquid and vapor. No vapor expected.
MELTER (RGIBBS)	3000	+0.120	Metal melter. Accepts metals with fixed contamination. Electrically heated with heat losses not included.

System A-5: Conventional Rotary Kiln, Polymer Stabilization

Table A-5.

ASSUMPTIONS and ENERGY BALANCES for ROTARY KILN W/ POLYMER STABILIZATION, System A-5

GENERAL COMMENTS: RGIBBS units calculate chemical and phase equilibrium with some restrictions, not all stated here. For detailed information refer to the ASPEN PLUS Release 9 input file. Chemical reactions and phase changes for some species are neglected. "Volatile" trace metals As, Cd, Hg, and Se are allowed to change phase, while Ba, Cr, Pb, and Ag are restricted to the solid phase. The inlet fuel mixture streams in this system are composed of CH4 and 20 % excess air. Design Spec's on air and oxygen flow consider both free oxygen and that bound in organics.

Block Name (ASPEN Type)	Outlet Temp (F)	Heat Duty (MMBtu/hr)	Description and Assumptions
KILN (RGIBBS)	1600	-0.365	Conventional rotary kiln. Accepts combustible and non-combustible wastes. CH4-fueled with air as oxidant. Heat losses assumed to be 5% of the sensible heat of the products. Includes fixed air leakage through seals. Chemical and phase equilibrium of Fe and Fe3O4 are restricted. Design Spec QKILN: Vary either inlet fuel mixture flow (if heat is needed) or inlet water flow (if cooling is needed) such that heat duty is 5% of that calculated for unit Q1. Design Spec OXI: Vary inlet air flow in stream AIR such that total inlet oxygen flow (minus that used by the CH4) is twice the outlet oxygen flow (100% excess).
DUPL1 (DUPL)	1600	0	A stream duplicator block used to send a copy of the KILN outlet stream to the dummy unit Q1.
Q1 (RGIBBS)	68	-7.299	Dummy unit. This calculates chemical equilibrium at 1600 F, identical to unit KILN, but has an outlet temperature of 68 F, thus yielding an estimate of the sensible heat of the products of unit KILN.
KILNSEP (SEP)	1600	0	2-way separation of KILN products: 80% of metals and oxides exit system to polymer stabilization (via stream ASH). Remainder, including 100% of volatile trace metals and vapors, sent to SCC.
SCC (RGIBBS)	2200	-0.806	Secondary combustion unit. CH4-fueled with air as oxidant. Heat losses assumed to be 5% of the sensible heat of the products. Chemical and phase equilibrium of Fe and Fe3O4 are restricted. Design Spec QSCC: Vary inlet fuel mixture flow such that heat duty is 5% of that calculated for unit Q2.
DUPL2 (DUPL)	2200	0	A stream duplicator block used to send a copy of the SCC outlet stream to the dummy unit Q2.
Q2 (RGIBBS)	68	-16.123	Dummy unit. This calculates chemical equilibrium at 2200 F, identical to unit SCC, but has an outlet temperature of 68 F, thus yielding an estimate of the sensible heat of the products of unit SCC.

Table A-5.

ASSUMPTIONS and ENERGY BALANCES for ROTARY KILN W/ POLYMER STABILIZATION, System A-5

GENERAL COMMENTS: RGIBBS units calculate chemical and phase equilibrium with some restrictions, not all stated here. For detailed information refer to the ASPEN PLUS Release 9 input file. Chemical reactions and phase changes for some species are neglected. "Volatile" trace metals As, Cd, Hg, and Se are allowed to change phase, while Ba, Cr, Pb, and Ag are restricted to the solid phase. The inlet fuel mixture streams in this system are composed of CH4 and 20 % excess air. Design Spec's on air and oxygen flow consider both free oxygen and that bound in organics.

Block Name (ASPEN Type)	Outlet Temp (F)	Heat Duty (MMBtu/hr)	Description and Assumptions
QUENCH (RGIBBS)	350	0	Quenching of the exhaust of the SCC. No losses included. Formation of CH4, C, S and Cl2 is restricted. Chemical and phase equilibrium of Fe and Fe3O4 are restricted. Design Spec QQUENCH: Vary inlet water flow rate to achieve zero heat duty.
BAGHOUSE (SEP)	350	0	3-way separation of QUENCH products. Vapors sent to SCRUB, volatile trace metals exit system (via stream HGPLUS), and remainder (ash) exits to polymer stabilization (via FLYASH).
SCRUB (RGIBBS)	120	-14.157	Wet acid scrubber. Design Spec SCRUBH2O: Vary inlet water flow such that inlet liquid water flow equals 20 times outlet dissolved salts (5% TDS), with a minimum value equal to inlet NaOH flow (50% soln). Design Spec NAOH: Vary inlet NaOH flow such that inlet NaOH flow equals 100 times outlet NaOH flow (1% excess).
L-V-SEP (FLASH2)	120	0	2-way separation of SCRUB products. Flash calculation to separate liquid and vapor.
MELTER (RGIBBS)	3000	+0.120	Metal melter. Accepts metals with fixed contamination. Electrically heated with heat losses not included.

System A-6: Conventional Rotary Kiln, Maximum Recycling

Table A-6.

ASSUMPTIONS and ENERGY BALANCES for ROTARY KILN W/ MAXIMUM RECYCLING, System A-6

GENERAL COMMENTS: RGIBBS units calculate chemical and phase equilibrium with some restrictions, not all stated here. For detailed information refer to the ASPEN PLUS Release 9 input file. Chemical reactions and phase changes for some species are neglected. "Volatile" trace metals As, Cd, Hg, and Se are allowed to change phase, while Ba, Cr, Pb, and Ag are restricted to the solid phase. The inlet fuel mixture streams in this system are composed of CH4 and 20 % excess air. Design Spec's on air and oxygen flow consider both free oxygen and that bound in organics.

Block Name (ASPEN Type)	Outlet Temp (F)	Heat Duty (MMBtu/hr)	Description and Assumptions
METALSEP (SEP)	68	0	Separation of bulk metals (all Fe) from the Combustible and Noncombustible input waste streams for recycling.
KILN (RGIBBS)	1600	-0.362	Conventional rotary kiln. Accepts combustible and non-combustible wastes and metals with fixed contamination (after sorting). CH4-fueled with air as oxidant. Heat losses assumed to be 5% of the sensible heat of the products. Includes fixed air leakage through seals. Design Spec QKILN: Vary either inlet fuel mixture flow (if heat is needed) or inlet water flow (if cooling is needed) such that heat duty is 5% of that calculated for unit Q1. Design Spec OXI: Vary inlet air flow in stream AIR such that total inlet oxygen flow (minus that used by the CH4) is twice the outlet oxygen flow (100% excess). Design Spec SOILH2O: Vary inlet soil feed rate (substream MIXED, 10% of total flow) such that it is 1/30 the magnitude of the SLAG stream (ash-to-gross soil ratio of 2:1). Design Spec SOILSOL: Vary inlet soil feed rate (substream CISOLID, 90% of total flow) such that it is 1/3.333 the magnitude of the SLAG stream (ash-to-gross soil ratio of 2:1).
DUPL1 (DUPL)	1600	0	A stream duplicator block used to send a copy of the KILN outlet stream to the dummy unit Q1.
Q1 (RGIBBS)	68	-7.231	Dummy unit. This calculates chemical equilibrium at 1600 F, identical to unit KILN, but has an outlet temperature of 68 F, thus yielding an estimate of the sensible heat of the products of unit KILN.
KILNSEP (SEP)	1600	-0.483	2-way separation of KILN products: 80% of metals and oxides go to VITRIFY (via stream ASH). Remainder, including 100% of volatile trace metals and vapors, sent to SCC. Stream ASH flashed to 68 F to represent storage of material before use.
SCC (RGIBBS)	2200	-0.79	Secondary combustion unit. CH4-fueled with air as oxidant. Heat losses assumed to be 5% of the sensible heat of the products. Design Spec QSCC: Vary inlet fuel mixture flow such that heat duty is 5% of that calculated for unit Q2.
DUPL2 (DUPL)	2200	0	A stream duplicator block used to send a copy of the SCC outlet stream to the dummy unit Q2.

Table A-6.

ASSUMPTIONS and ENERGY BALANCES for ROTARY KILN W/ MAXIMUM RECYCLING, System A-6

GENERAL COMMENTS: RGIBBS units calculate chemical and phase equilibrium with some restrictions, not all stated here. For detailed information refer to the ASPEN PLUS Release 9 input file. Chemical reactions and phase changes for some species are neglected. "Volatile" trace metals As, Cd, Hg, and Se are allowed to change phase, while Ba, Cr, Pb, and Ag are restricted to the solid phase. The inlet fuel mixture streams in this system are composed of CH4 and 20 % excess air. Design Spec's on air and oxygen flow consider both free oxygen and that bound in organics.

Block Name (ASPEN Type)	Outlet Temp (F)	Heat Duty (MMBtu/hr)	Description and Assumptions
Q2 (RGIBBS)	68	-15.798	Dummy unit. This calculates chemical equilibrium at 2200 F, identical to unit SCC, but has an outlet temperature of 68 F, thus yielding an estimate of the sensible heat of the products of unit SCC.
QUENCH (RGIBBS)	350	0	Quenching of the exhaust of the SCC. No losses included. Formation of CH4, C, S and Cl2 is restricted. Design Spec QQUENCH: Vary inlet water flow rate to achieve zero heat duty.
BAGHOUSE (SEP)	350	-0.017	3-way separation of QUENCH products. Vapors sent to SCRUB, volatile trace metals exit system (via stream HGPLUS), and remainder (soil + ash) recycles to VITRIFY (via FLYASH). Stream FLYASH flashed to 68 F to represent storage of material before use.
SCRUB (RGIBBS)	120	-13.85	Wet acid scrubber. Design Spec SCRUBH2O: Vary inlet water flow such that inlet liquid water flow equals 20 times outlet dissolved salts (5% TDS), with a minimum value equal to inlet NaOH flow (50% soln). Design Spec NAOH: Vary inlet NaOH flow such that total inlet NaOH flow (including recycled NaOH) equals 100 times outlet NaOH flow (1% excess).
L-V-SEP (FLASH2)	120	0	2-way separation of SCRUB products. Flash calculation to separate liquid and vapor.
SPLITTER (RSTOIC)	221	14.528	Splitting of the NaCl into HCl and NaOH by electrolysis. Feed material raised to 221 F to evaporate off water. Conversion assumed at 100% of NaCl and process assumed 100% efficient with no heat losses included.
SALT-SEP (SEP)	221	-14.905	Separation of splitter products: HCl assumed taken off as a 50 % solution, flashed to 68 F; 98% of NaOH assumed recycled as a pure component at 68 F; water (& remaining NaOH) for recycle, flashed to 68 F; and the remainder, including other dry salts and (predominantly) the gases formerly in solution.
VITRIFY (RGIBBS)	3000	+1.485	Vitrifier. Heat duty does not include heat losses. Feed material enters at 68 F.
L-V-SEP2 (FLASH2)	3000	0	2-way separation of VITRIFY products. Flash calculation to separate liquid and vapor. No vapor expected.

Table A-6.

ASSUMPTIONS and ENERGY BALANCES for ROTARY KILN W/ MAXIMUM RECYCLING, System A-6

GENERAL COMMENTS: RGIBBS units calculate chemical and phase equilibrium with some restrictions, not all stated here. For detailed information refer to the ASPEN PLUS Release 9 input file. Chemical reactions and phase changes for some species are neglected. "Volatile" trace metals As, Cd, Hg, and Se are allowed to change phase, while Ba, Cr, Pb, and Ag are restricted to the solid phase. The inlet fuel mixture streams in this system are composed of CH4 and 20 % excess air. Design Spec's on air and oxygen flow consider both free oxygen and that bound in organics.

Block Name (ASPEN Type)	Outlet Temp (F)	Heat Duty (MMBtu/hr)	Description and Assumptions
MELTER (RGIBBS)	3000	+0.120	Metal melter. Accepts metals with fixed contamination. Electrically heated with heat losses not included.

System A-7: Slagging Rotary Kiln

Table A-7. Page 1 of 2

ASSUMPTIONS and ENERGY BALANCES for SLAGGING ROTARY KILN, System A-7

GENERAL COMMENTS: RGIBBS units calculate chemical and phase equilibrium with some restrictions, not all stated here. For detailed information refer to the ASPEN PLUS Release 9 input file. Chemical reactions and phase changes for some species are neglected. "Volatile" trace metals As, Cd, Hg, and Se are allowed to change phase, while Ba, Cr, Pb, and Ag are restricted to the solid phase. The inlet fuel mixture streams in this system are composed of CH4 and 20 % excess air. Design Spec's on air and oxygen flow consider both free oxygen and that bound in organics.

Block Name (ASPEN Type)	Outlet Temp (F)	Heat Duty (MMBtu/hr)	Description and Assumptions
KILN (RGIBBS)	2500	-1.021	Slagging rotary kiln. Accepts combustible and non-combustible wastes and metals with fixed contamination. CH4-fueled with air as oxidant. Heat losses assumed to be 5% of the sensible heat of the products. Includes fixed air leakage through seals. Chemical and phase equilibrium of Fe and Fe3O4 are restricted. Glass forming inerts forced to melt. Design Spec QKILN: Vary inlet fuel mixture flow such that heat duty is 5% of that calculated for unit Q1. Design Spec OXI: Vary inlet air flow in stream AIR such that total inlet oxygen flow (minus that used by the CH4) is twice the outlet oxygen flow (100% excess). Design Spec SOILH2O: Vary inlet soil feed rate (substream MIXED, 10% of total flow) such that it is 1/30 the magnitude of the SLAG stream (ash-to-gross soil ratio of 2:1). Design Spec SOILSOL: Vary inlet soil feed rate (substream CISOLID, 90% of total flow) such that it is 1/3.333 the magnitude of the SLAG stream (ash-to-gross soil ratio of 2:1).
DUPL1 (DUPL)	2500	0	A stream duplicator block used to send a copy of the KILN outlet stream to the dummy unit Q1.
Q1 (RGIBBS)	68	-20.423	Dummy unit. This calculates chemical equilibrium at 2500 F, identical to unit KILN, but has an outlet temperature of 68 F, thus yielding an estimate of the sensible heat of the products of unit KILN.
KILNSEP (SEP)	2500	0	2-way separation of KILN products: 80% of metals and oxides exit system (via stream SLAG). Remainder, including 100% of volatile trace metals and vapors, sent to SCC.
SCC (RGIBBS)	2500	-1.134	Secondary combustion unit. CH4-fueled with air as oxidant. Heat losses assumed to be 5% of the sensible heat of the products. Chemical and phase equilibrium of Fe and Fe3O4 are restricted. Glass forming inerts forced to melt. Design Spec QSCC: Vary inlet fuel mixture flow such that heat duty is 5% of that calculated for unit Q2.
DUPL2 (DUPL)	2500	0	A stream duplicator block used to send a copy of the SCC outlet stream to the dummy unit Q2.

Table A-7.

ASSUMPTIONS and ENERGY BALANCES for SLAGGING ROTARY KILN, System A-7

GENERAL COMMENTS: RGIBBS units calculate chemical and phase equilibrium with some restrictions, not all stated here. For detailed information refer to the ASPEN PLUS Release 9 input file. Chemical reactions and phase changes for some species are neglected. "Volatile" trace metals As, Cd, Hg, and Se are allowed to change phase, while Ba, Cr, Pb, and Ag are restricted to the solid phase. The inlet fuel mixture streams in this system are composed of CH4 and 20 % excess air. Design Spec's on air and oxygen flow consider both free oxygen and that bound in organics.

Block Name (ASPEN Type)	Outlet Temp (F)	Heat Duty (MMBtu/hr)	Description and Assumptions
Q2 (RGIBBS)	68	-22.672	Dummy unit. This calculates chemical equilibrium at 2500 F, identical to unit SCC, but has an outlet temperature of 68 F, thus yielding an estimate of the sensible heat of the products of unit SCC.
QUENCH (RGIBBS)	350	0	Quenching of the exhaust of the SCC. No losses included. Formation of CH4, C, and S is restricted. Chemical and phase equilibrium of Fe and Fe3O4 are restricted. Glass forming inerts forced to solidify. Design Spec QQUENCH: Vary inlet water flow rate to achieve zero heat duty.
BAGHOUSE (SEP)	350	0	3-way separation of QUENCH products. Vapors sent to SCRUB, volatile trace metals exit system, and remainder (soil + ash) recycles to KILN (via FLYASH).
SCRUB (RGIBBS)	120	-20.019	Wet acid scrubber. Design Spec SCRUBH2O: Vary inlet water flow such that inlet liquid water flow equals 20 times outlet dissolved salts (5% TDS), with a minimum value equal to inlet NaOH flow (50% soln). Design Spec NAOH: Vary inlet NaOH flow such that inlet NaOH flow equals 100 times outlet NaOH flow (1% excess).
L-V-SEP (FLASH2)	120	0	2-way separation of SCRUB products. Flash calculation to separate liquid and vapor.

System B-1: Pyrolysis

Table A-8.

ASSUMPTIONS and ENERGY BALANCES for PYROLYSIS, System B-1

GENERAL COMMENTS: RGIBBS units calculate chemical and phase equilibrium with some restrictions, not all stated here. For detailed information refer to the ASPEN PLUS Release 9 input file. Chemical reactions and phase changes for some species are neglected. "Volatile" trace metals As, Cd, Hg, and Se are allowed to change phase, while Ba, Cr, Pb, and Ag are restricted to the solid phase. No direct use of auxiliary fuel occurs in this system. Design Spec's on air and oxygen flow consider both free oxygen and that bound in organics.

Block Name (ASPEN Type)	Outlet Temp (F)	Heat Duty (MMBtu/hr)	Description and Assumptions
PYROLYZR (RSTOIC)	1200	-0.742	Rotary kiln pyrolyzer. Accepts combustible wastes only. Indirect fired, electrically heated to minimize offgas volume. Heat duty (net heat output) does not include any heat losses. Model includes fixed air leakage through seals as used in original Phase I report (not same amount as in systems A1-A7). Only chemical or phase reaction allowed is 99% conversion of carbon to CO, by use of additional oxygen. Design Spec OXYGEN: Vary inlet oxygen flow in stream OXYGEN such that outlet mole flow of carbon minus two times outlet mole flow of oxygen equals 0.01 (-0-% excess oxygen).
PYRO-SEP (SEP)	1200	-0.027	2-way separation of PYROLYZR products: 80% of "ash" (solid carbon and sulphur, metals, and inerts) including the ***solid*** volatile trace metals go to VITRIFY (via stream ASH). Remainder, including 100% of the molten and gaseous volatile trace metals and the gases and organic constituents, sent to SCC. Stream ASH is flashed to 68 F to represent storage of material before use.
VITRIFY (RGIBBS)	3000	+2.571	Vitrifier. Accepts non-combustible wastes. Use of an oxygen lance assures burnout of remaining carbon. No heat losses included. Chemical and phase equilibrium of Fe and Fe3O4 are restricted. Design Spec O2-VIT: Vary the inlet oxygen flow such that total inlet oxygen flow is six times the outlet oxygen flow (20% excess). Design Spec SOILH2O: Vary inlet soil feed rate (substream MIXED, 10% of total flow) such that it is 1/30 the magnitude of the SLAG stream (ash-to-gross soil ratio of 2:1). Design Spec SOILSOL: Vary inlet soil feed rate (substream CISOLID, 90% of total flow) such that it is 1/3.333 the magnitude of the SLAG stream (ash-to-gross soil ratio of 2:1).
VIT-SEP (SEP)	3000	0	2-way separation of VITRIFY products: 80% of "ash" (solid carbon and sulphur, metals, and inerts) including the solid volatile trace metals go to VITRIFY (via stream ASH). Remainder, including 100% of the molten or gaseous volatile trace metals and the gases and organic constituents, sent to SCC.
SCC (RGIBBS)	2200	-5.258	Secondary combustion unit. Heat losses are not included in the heat duty. Oxygen to be supplied in stoichiometric proportions. Design Spec O2-SCC: Vary the inlet oxygen flow such that total inlet oxygen flow is 51 times the outlet oxygen flow (2% excess).

Table A-8.

ASSUMPTIONS and ENERGY BALANCES for PYROLYSIS, System B-1

GENERAL COMMENTS: RGIBBS units calculate chemical and phase equilibrium with some restrictions, not all stated here. For detailed information refer to the ASPEN PLUS Release 9 input file. Chemical reactions and phase changes for some species are neglected. "Volatile" trace metals As, Cd, Hg, and Se are allowed to change phase, while Ba, Cr, Pb, and Ag are restricted to the solid phase. No direct use of auxiliary fuel occurs in this system. Design Spec's on air and oxygen flow consider both free oxygen and that bound in organics.

Block Name (ASPEN Type)	Outlet Temp (F)	Heat Duty (MMBtu/hr)	Description and Assumptions
QUENCH (RGIBBS)	350	0	Quenching of the exhaust of the SCC. No losses included. Formation of CH4, C, S and Cl2 is restricted. Design Spec QQUENCH: Vary inlet water flow rate to achieve zero heat duty.
BAGHOUSE (SEP)	350	-0.001	3-way separation of QUENCH products. Vapors sent to SCRUB, volatile trace metals exit system (via stream HGPLUS), and remainder (soil + ash) recycles to VITRIFY (via FLYASH). Stream FLYASH is flashed to 68 F to represent storage of material before use.
SCRUB (RGIBBS)	120	-2.608	Wet acid scrubber. Formation of CH4, C, and S is restricted. Design Spec SCRUBH2O: Vary inlet water flow such that inlet liquid water flow equals 20 times outlet dissolved salts (5% TDS), with a minimum value equal to inlet NaOH flow (50% soln). Design Spec NAOH: Vary inlet NaOH flow such that inlet NaOH flow equals 100 times outlet NaOH flow (1% excess).
L-V-SEP (FLASH2)	120	0	2-way separation of SCRUB products. Flash calculation to separate liquid and vapor.
MELTER (RGIBBS)	3000	+0.120	Metal melter. Accepts metals with fixed contamination. Electrically heated with heat losses not included.

System C-1: Plasma Furnace

Table A-9. Page 1 of 2

ASSUMPTIONS and ENERGY BALANCES for PLASMA FURNACE, System C-1

GENERAL COMMENTS: RGIBBS units calculate chemical and phase equilibrium with some restrictions as stated. For detailed information refer to the ASPEN PLUS Release 9 input file. Chemical reactions and phase changes for some species are neglected. "Volatile" trace metals As, Cd, Hg, and Se are allowed to change phase, while Ba, Cr, Pb, and Ag are restricted to the solid phase. No direct use of auxiliary fuel occurs in this system. Design Spec's on air and oxygen flow consider both free oxygen and that bound in organics.

Block Name (ASPEN Type)	Outlet Temp (F)	Heat Duty (MMBtu/hr)	Description and Assumptions
FEED-SEP (SEP)	70	0	2-way separation of the feed material. SOLIDS stream goes to the unit representing the vitrifier molten pool, while the organic-type components go to the unit representing the vitrifier cover gas region. Five percent of the carbon and sulfur is assumed to end up trapped in the melt, and 5% of the solids are assumed to be carried off with the vapors.
PLASMA (RGIBBS)	3000	+2.934	Plasma furnace. Accepts the non-organic portion of the combustible and non-combustible wastes and metals with fixed contamination. The organic portion is assumed to be volatilized by the plasma arc at a lower temperature and released to the plenum over the melt. Heat duty does not include any losses or the energy needed to heat and volatilize the organics. Design Spec SOILH2O: Vary inlet soil feed rate (substream MIXED, 10% of total flow) such that it is 1/30 the magnitude of the SLAG stream (ash-to-gross soil ratio of 2:1). Design Spec SOILSOL: Vary inlet soil feed rate (substream CISOLID, 90% of total flow) such that it is 1/3.333 the magnitude of the SLAG stream (ash-to-gross soil ratio of 2:1).
PLAS-SEP (SEP)	3000	0	3-way separation of PLASMA products: 100% of metals exit system (via stream METAL). Some Fe3O4 is reduced to Fe. All of the remaining solids go to the slag stream (SLAG). Any gases produced, as well as 100% of volatile trace metals, are sent to unit PLENUM.
PLENUM (RGIBBS)	1800	-3.297	Plasma furnace plenum area. Organic constituents are volatilized and released from the melt into the plenum. Air is injected for complete combustion. The heat duty does not include any losses. Formation of CH4 is restricted. Design Spec AIR: Vary the inlet air flow (stream AIR) such that the total incoming oxygen is six times the outlet oxygen flow (20% excess).
SCC (RGIBBS)	2200	+0.975	Secondary combustion unit. Further combustion of the vapors at a temperature to assure destruction of PCB's. Add air at up to 20% excess, if needed. The heat duty does not include any losses. Formation of CH4, C and S is restricted. Design Spec AIR2: Vary the inlet air flow (stream AIR2) such that the total incoming oxygen is six times the outlet oxygen flow (20% excess).

Table A-9.

ASSUMPTIONS and ENERGY BALANCES for PLASMA FURNACE, System C-1

GENERAL COMMENTS: RGIBBS units calculate chemical and phase equilibrium with some restrictions as stated. For detailed information refer to the ASPEN PLUS Release 9 input file. Chemical reactions and phase changes for some species are neglected. "Volatile" trace metals As, Cd, Hg, and Se are allowed to change phase, while Ba, Cr, Pb, and Ag are restricted to the solid phase. No direct use of auxiliary fuel occurs in this system. Design Spec's on air and oxygen flow consider both free oxygen and that bound in organics.

Block Name (ASPEN Type)	Outlet Temp (F)	Heat Duty (MMBtu/hr)	Description and Assumptions
QUENCH (RGIBBS)	350	0	Quenching of the exhaust vapors of the SCC. No losses included. Formation of CH4, C and S is restricted. Design Spec QQUENCH: Vary inlet water flow rate (QNCH2O) to achieve zero heat duty.
BAGHOUSE (SEP)	350	-0.005	3-way separation of QUENCH products, modeling the various filters. Vapors sent to DRYSCRUB (via QNCHVAP), volatile trace metals exit system (via HGPLUS), and remainder recycles to PLASMA (via FLYASH). Stream FLYASH flashed to 68 F to represent storage of material before use.
SCRUB (RGIBBS)	120	-4.954	Wet acid scrubber. Design Spec SCRUBH2O: Vary inlet water flow such that inlet liquid water flow equals 20 times outlet dissolved salts (5% TDS), with a minimum value equal to inlet NaOH flow (50% soln). Design Spec NAOH: Vary inlet NaOH flow such that inlet NaOH flow equals 100 times outlet NaOH flow (1% excess).
L-V-SEP (FLASH2)	120	0	2-way separation of SCRUB products. Flash calculation to separate liquid and vapor.

System C-2: Plasma Furnace, CO_2 Retention

Table A-10. Page 1 of 3

ASSUMPTIONS and ENERGY BALANCES for PLASMA FURNACE W/ CO_2 RETENTION, System C-2

GENERAL COMMENTS: RGIBBS units calculate chemical and phase equilibrium with some restrictions as stated. For detailed information refer to the ASPEN PLUS Release 9 input file. Chemical reactions and phase changes for some species are neglected. "Volatile" trace metals As, Cd, Hg, and Se are allowed to change phase, while Ba, Cr, Pb, and Ag are restricted to the solid phase. The inlet mixed fuel stream in this system is composed of CH4 and 20% excess oxygen.. Design Spec's on air and oxygen flow consider both free oxygen and that bound in organics.

Block Name (ASPEN Type)	Outlet Temp (F)	Heat Duty (MMBtu/hr)	Description and Assumptions
FEED-SEP (SEP)	70	0	2-way separation of the feed material. SOLIDS stream goes to the unit representing the vitrifier molten pool, while the organic-type components go to the unit representing the vitrifier cover gas region. Five percent of the carbon and sulfur is assumed to end up trapped in the melt, and 5% of the solids are assumed to be carried off with the vapors.
PLASMA (RGIBBS)	3000	+2.933	Plasma furnace. Accepts the non-organic portion of the combustible and non-combustible wastes and metals with fixed contamination. The organic portion is assumed to be volatilized by the plasma arc at a lower temperature and released to the plenum over the melt. Heat duty does not include any losses or the energy needed to heat and volatilize the organics. Design Spec SOILH2O: Vary inlet soil feed rate (substream MIXED, 10% of total flow) such that it is 1/30 the magnitude of the SLAG stream (ash-to-gross soil ratio of 2:1). Design Spec SOILSOL: Vary inlet soil feed rate (substream CISOLID, 90% of total flow) such that it is 1/3.333 the magnitude of the SLAG stream (ash-to-gross soil ratio of 2:1).
PLAS-SEP (SEP)	3000	0	3-way separation of PLASMA products: 100% of metals exit system (via stream METAL). Some Fe3O4 is reduced to Fe. All of the remaining solids go to the slag stream (SLAG). Any gases produced, as well as 100% of volatile trace metals, are sent to unit PLENUM.
PLENUM (RGIBBS)	1800	-5.399	Plasma furnace plenum area. Organic constituents are volatilized and released from the melt into the plenum. Oxygen-rich offgas is recycled into the zone, as well as make-up oxygen, combusting the vapors. The heat duty does not include any losses. Formation of CH4 is restricted. Design Spec OXYGEN: Vary the inlet oxygen flow (stream OXYGEN) such that the total incoming oxygen is 3.5 times the outlet oxygen flow (40% excess).

Table A-10.

ASSUMPTIONS and ENERGY BALANCES for PLASMA FURNACE W/ CO_2 RETENTION, System C-2

GENERAL COMMENTS: RGIBBS units calculate chemical and phase equilibrium with some restrictions as stated. For detailed information refer to the ASPEN PLUS Release 9 input file. Chemical reactions and phase changes for some species are neglected. "Volatile" trace metals As, Cd, Hg, and Se are allowed to change phase, while Ba, Cr, Pb, and Ag are restricted to the solid phase. The inlet mixed fuel stream in this system is composed of CH4 and 20% excess oxygen.. Design Spec's on air and oxygen flow consider both free oxygen and that bound in organics.

Block Name (ASPEN Type)	Outlet Temp (F)	Heat Duty (MMBtu/hr)	Description and Assumptions
SCC (RGIBBS)	2200	-0.164	Secondary combustion unit. Further combustion of the vapors at a temperature to assure destruction of PCB's. CH4-fueled with pure oxygen at 20% excess. Heat losses assumed to be 5% of the sensible heat of the products. Formation of CH4, C and S is restricted. Design Spec QSCC: Vary inlet fuel mixture flow such that heat duty is 5% of that calculated for unit Q2.
DUPL2 (DUPL)	2200	0	A stream duplicator block used to send a copy of the SCC outlet stream to the dummy unit Q2.
Q2 (RGIBBS)	68	-3.283	Dummy unit. This calculates chemical equilibrium at 2200 F, identical to unit SCC, but has an outlet temperature of 68 F, thus yielding an estimate of the sensible heat of the products of unit SCC.
QUENCH (RGIBBS)	350	0	Quenching of the exhaust vapors of the SCC. No losses included. Formation of CH4, C and S is restricted. Design Spec QQUENCH: Vary inlet water flow rate (QNCH2O) to achieve zero heat duty.
BAGHOUSE (SEP)	350	0	3-way separation of QUENCH products, modeling the various filters. Vapors sent to DRYSCRUB (via QNCHVAP), volatile trace metals exit system (via HGPLUS), and remainder recycles to PLASMA (via FLYASH).
DRYSCRUB (RGIBBS)	350	-2.595	Dry scrubber. Chemical equilibrium calculated for conversion of CaO to CaSO4 and CaCl2, with all volatiles in the system participating. Heat duty does not include any losses. Water used to slake the lime is not included in the model. Design Spec SCRUB: Vary the specified flow split of unit SPLIT such that the inlet CaO flow to DRYSCRUB is 100 times the outlet CaO flow.
SCRUBSEP (SEP)	350	0	2-way separation of DRYSCRUB products. Vapors sent to CO2-ABS and remainder exits system.
CO2-ABS (RSTOIC)	1200	-0.271	Restricted chemical reaction combining CO2 and CaO to form CaCO3, assuming 100% utilization of the CO2. Heat duty does not include any losses.
ABSSEP (SEP)	1200	0	2-way separation of CO2-ABS products. Vapors sent to FLASH. Remainder, consisting only of CaCO3, sent to CO2-DES.

Table A-10.

ASSUMPTIONS and ENERGY BALANCES for PLASMA FURNACE W/ CO_2 RETENTION, System C-2

GENERAL COMMENTS: RGIBBS units calculate chemical and phase equilibrium with some restrictions as stated. For detailed information refer to the ASPEN PLUS Release 9 input file. Chemical reactions and phase changes for some species are neglected. "Volatile" trace metals As, Cd, Hg, and Se are allowed to change phase, while Ba, Cr, Pb, and Ag are restricted to the solid phase. The inlet mixed fuel stream in this system is composed of CH4 and 20% excess oxygen.. Design Spec's on air and oxygen flow consider both free oxygen and that bound in organics.

Block Name (ASPEN Type)	Outlet Temp (F)	Heat Duty (MMBtu/hr)	Description and Assumptions
FLASH (FLASH2)	90	-4.437	1200 F inlet stream flashed at 90 F to separate liquid and vapor. Heat duty does not include any losses. Heat removed by an unspecified indirect heat exchange process.
EX-SPLIT (FSPLIT)	90	0	A split of the vapor stream exiting FLASH (predominantly oxygen), with 90% recycled to PLENUM and 10% exiting system.
CO2-DES (RGIBBS)	1700	+2.657	Desorption of the CO2 from CaCO3, producing CaO. Heat duty does not include heat losses.
CO2-SEP (SEP)	1700	-0.613	2-way separation of CO2-DES products. CO2 is sent to GASQUENC and remainder, consisting only of CaO, sent to SPLIT. CaO (stream CAO-OUT) is flashed to 68 F at outlet to represent storage of the product before use.
SPLIT (FSPLIT)	1700	0	A split of the (hot) solids stream from the separator CO2-SEP, recycling 90% of the CaO back to CO2-ABS. The remaining 10% is split between that going to DRYSCRUB for Cl2 and SO2 removal (3.3%), and the rest exiting system to stabilization (6.7%).
CAOMIXER (MIXER)	1547	0	Mixing of the (hot) recycled CaO with make-up CaO. Design Spec CAO: Vary inlet flow of make-up CaO to achieve an equal molar flow rate between the CO2 and the CaO as they enter the absorber (to produce CaCO3).
GASQUENC (RGIBBS)	350	0	Quenching of the 1700 F CO2 exhaust stream with water. No losses included. Design Spec QQUENCH2: Vary inlet water flow rate to achieve zero heat duty.

System C-3: Plasma Gasification

Table A-11.

ASSUMPTIONS and ENERGY BALANCES for PLASMA FURNACE W/ STEAM GASIFICATION, System C-3

GENERAL COMMENTS: RGIBBS units calculate chemical and phase equilibrium with some restrictions as stated. For detailed information refer to the ASPEN PLUS Release 9 input file. Chemical reactions and phase changes for some species are neglected. "Volatile" trace metals As, Cd, Hg, and Se are allowed to change phase, while Ba, Cr, Pb, and Ag are restricted to the solid phase. Design Spec's on air and oxygen flow include both free oxygen and that bound in organics.

Block Name (ASPEN Type)	Outlet Temp (F)	Heat Duty (MMBtu/hr)	Description and Assumptions
FEED-SEP (SEP)	70	0	2-way separation of the feed material. SOLIDS stream goes to the unit representing the vitrifier molten pool, while the organic-type components go to the unit representing the vitrifier cover gas region. Five percent of the carbon and sulfur is assumed to end up trapped in the melt, and 5% of the solids are assumed to be carried off with the vapors.
PLASMA (RGIBBS)	3000	+2.937	Plasma furnace. Accepts the non-organic portion of the combustible and non-combustible wastes and metals with fixed contamination. The organic portion is assumed to be volatilized by the plasma arc at a lower temperature and released to the plenum over the melt. Heat duty does not include any losses or the energy needed to heat and volatilize the organics. Design Spec SOILH2O: Vary inlet soil feed rate (substream MIXED, 10% of total flow) such that it is 1/30 the magnitude of the SLAG stream (ash-to-gross soil ratio of 2:1). Design Spec SOILSOL: Vary inlet soil feed rate (substream CISOLID, 90% of total flow) such that it is 1/3.333 the magnitude of the SLAG stream (ash-to-gross soil ratio of 2:1).
SLAG-SEP (SEP)	3000	0	3-way separation of PLASMA products: 100% of metals exit system (via stream METAL). Some Fe3O4 is reduced to Fe. All of the remaining solids go to the slag stream (SLAG). Any gases produced, as well as 100% of volatile trace metals, are sent to unit PLENUM.
STEAMGEN (HEATER)	300	+0.069	Steam Generator. Energy source undefined. Heat duty does not include losses.
PLENUM (RGIBBS)	1800	+2.280	Plasma furnace plenum area. Organic constituents are volatilized and released from the melt into the plenum. Steam injected into the zone to produce synthesis gas (syngas). The heat duty does not include any losses. Formation of CH4 is restricted. Design Spec STEAM: Vary inlet water flow in stream WATER such that total H2O inlet flow (not including soil moisture) equals 6 times H2O outlet flow (20% excess).
QUENCH (RGIBBS)	350	0	Quenching of the syngas stream from the PLENUM. Formation of CH4, C and S is restricted. Design Spec QQUENCH: Vary inlet water flow rate (QNCH2O) to achieve zero heat duty.

Table A-11.

ASSUMPTIONS and ENERGY BALANCES for PLASMA FURNACE W/ STEAM GASIFICATION, System C-3

GENERAL COMMENTS: RGIBBS units calculate chemical and phase equilibrium with some restrictions as stated. For detailed information refer to the ASPEN PLUS Release 9 input file. Chemical reactions and phase changes for some species are neglected. "Volatile" trace metals As, Cd, Hg, and Se are allowed to change phase, while Ba, Cr, Pb, and Ag are restricted to the solid phase. Design Spec's on air and oxygen flow include both free oxygen and that bound in organics.

Block Name (ASPEN Type)	Outlet Temp (F)	Heat Duty (MMBtu/hr)	Description and Assumptions
BAGHOUSE (SEP)	350	0	3-way separation of QUENCH products, modeling the various filters. Vapors sent to SCRUB (via VAPOR), volatile trace metals exit system (via HGPLUS), and remainder recycles to GASIFIER (via FLYASH).
SCRUB (RGIBBS)	120	-0.835	Wet acid scrubber. Formation of CH4, C, and S is restricted. Design Spec SCRUBH2O: Vary inlet water flow such that inlet liquid water flow equals 20 times outlet dissolved salts (5% TDS), with a minimum value equal to inlet NaOH flow (50% soln). Design Spec NAOH: Vary inlet NaOH flow such that inlet NaOH flow equals 100 times outlet NaOH flow (1% excess).
L-V-SEP (FLASH2)	120	0	2-way separation of SCRUB products. Flash calculation to separate liquid and vapor.
CATALYST (RSTOIC)	1500	-2.813	Catalytic oxidizer. Chemical reactions limited to oxidation of CO, H2, and CH4. Design Spec AIR: Vary inlet air flow such that total inlet oxygen flow equals twice the outlet oxygen flow (100% excess).

System D-1: CO_2 Retention

Table A-12. Page 1 of 3

ASSUMPTIONS AND ENERGY BALANCES for FIXED-HEARTH PYROLYZER W/ CO_2 RETENTION, System D-1

GENERAL COMMENTS: RGIBBS units calculate chemical and phase equilibrium with some restrictions, not all stated here. For detailed information refer to the ASPEN PLUS Release 9 input file. Chemical reactions and phase changes for some species are neglected. "Volatile" trace metals As, Cd, Hg, and Se are allowed to change phase, while Ba, Cr, Pb, and Ag are restricted to the solid phase. The pyrolyzer inlet fuel mixture (if used in place of cooling water) is composed of CH4 and 20% excess ***oxygen***. Design Spec's on vitrifier and SCC oxygen flows consider both free oxygen and that bound in organics.

Block Name (ASPEN Type)	Outlet Temp (F)	Heat Duty (MMBtu/hr)	Description and Assumptions
PYROLYZR (RSTOIC)	1200	-0.062	Fixed hearth pyrolyzer. Accepts combustible wastes only. Directly fired with CH4 if needed, but cooling water has been used instead to accommodate the assumed 5% heat loss. Model includes fixed amount of air leakage. Only two chemical reactions allowed: 99% conversion of carbon to CO, and 100% conversion of CH4 to CO2 and H2O, by use of additional oxygen. Design Spec OXYGEN: Vary inlet oxygen mass flow (in stream OXYGEN) such that total inlet oxygen flow equals 100 times the outlet oxygen flow (1% excess). Design Spec QPYRO: Vary inlet fuel mixture (if heat is needed) or inlet cooling water (if cooling is needed) such that heat duty is 5% of that calculated for unit Q1.
DUPL1 (DUPL)	1200	0	A stream duplicator block used to send a copy of the PYROLYZR outlet stream to the dummy unit Q1.
Q1 (HEATER)	68	-1.235	Dummy unit. This calculates simple cooldown of products from unit PYROLYZR, to a temperature of 68 F, thus yielding an estimate of their heat content.
PYRO-SEP (SEP)	1200	-0.027	2-way separation of PYROLYZR products: 80% of "ash" (solid carbon and sulphur, metals, and inerts) including the ***solid*** volatile trace metals go to VITRIFY (via stream ASH). Remainder, including 100% of the molten and gaseous volatile trace metals and the gases and organic constituents, sent to SCC. Stream ASH is flashed to 68 F to represent storage of material before use.
VITRIFY (RGIBBS)	3000	+2.571	Vitrifier. Accepts non-combustible wastes. Assumed similar to system B1 vitrifier (use of an oxygen lance assures burnout of remaining carbon). No heat losses included. Chemical and phase equilibrium of Fe and Fe3O4 are restricted. Design Spec O2VIT: Vary the inlet oxygen flow such that total inlet oxygen flow is 6 times the outlet oxygen flow (20% excess). Design Spec SOILH2O: Vary inlet soil feed rate (substream MIXED, 10% of total flow) such that it is 1/30 the magnitude of the SLAG stream (ash-to-gross soil ratio of 2:1). Design Spec SOILSOL: Vary inlet soil feed rate (substream CISOLID, 90% of total flow) such that it is 1/3.333 the magnitude of the SLAG stream (ash-to-gross soil ratio of 2:1).

Table A-12.

ASSUMPTIONS AND ENERGY BALANCES for FIXED-HEARTH PYROLYZER W/ CO_2 RETENTION, System D-1

GENERAL COMMENTS: RGIBBS units calculate chemical and phase equilibrium with some restrictions, not all stated here. For detailed information refer to the ASPEN PLUS Release 9 input file. Chemical reactions and phase changes for some species are neglected. "Volatile" trace metals As, Cd, Hg, and Se are allowed to change phase, while Ba, Cr, Pb, and Ag are restricted to the solid phase. The pyrolyzer inlet fuel mixture (if used in place of cooling water) is composed of CH4 and 20% excess ***oxygen***. Design Spec's on vitrifier and SCC oxygen flows consider both free oxygen and that bound in organics.

Block Name (ASPEN Type)	Outlet Temp (F)	Heat Duty (MMBtu/hr)	Description and Assumptions
VIT-SEP (SEP)	3000	0	2-way separation of VITRIFY products: 80% of "ash" (solid carbon and sulphur, metals, and inerts) including the solid volatile trace metals go to VITRIFY (via stream ASH). Remainder, including 100% of the molten or gaseous volatile trace metals and the gases and organic constituents, sent to SCC. ***NOTE:*** Actual system calls for a separate APC system for vitrifier.
SCC (RGIBBS)	2200	-0.334	Secondary combustion unit. CH4 heated or water cooled. Heat losses assumed to 5% of the sensible heat of the products. Design Spec QSCC: Vary inlet CH4 flow (if heat is needed) or water (if cooling is needed) such that heat duty is 5% of that calculated for dummy unit Q2. Design Spec O2SCC: Vary the inlet oxygen flow such that total inlet oxygen flow is 6 times the outlet oxygen flow (20% excess).
DUPL2 (DUPL)	2200	0	A stream duplicator block used to send a copy of the SCC outlet stream to the dummy unit Q2.
Q2 (RGIBBS)	68	-15.791	Dummy unit. This calculates chemical equilibrium at 2200 F, identical to unit SCC, but has an outlet temperature of 68 F, thus yielding an estimate of the sensible heat of the products of unit SCC.
QUENCH (RGIBBS)	350	0	Quenching of the exhaust of the SCC. No losses included. Formation of CH4, C, S and Cl2 is restricted. Design Spec QQUENCH: Vary inlet water flow rate to achieve zero heat duty.
BAGHOUSE (SEP)	350	-0.305	3-way separation of QUENCH products. Vapors sent to DRYSCRUB, volatile trace metals exit system (via stream HGPLUS), and remainder (soil + ash) recycles to VITRIFY (via FLYASH). Stream FLYASH is flashed to 68 F to represent storage of material before use. (Heat duty may not be accurate.)
DRYSCRUB (RGIBBS)	350	-0.097	Dry scrubber. Chemical equilibrium calculated for conversion of CaO to CaSO4 and CaCl2, with all volatiles in the system participating. SO2 is fully converted (not included in the product list). Heat duty does not include any losses. Water used to slake the lime is not included in the model. Design Spec SCRUB: Vary the specified fractional flow split of unit SPLIT (between 0 and 0.1) such that the inlet CaO mole flow to DRYSCRUB is equal to the inlet mole flow of the SO2 plus half the inlet mole flow of the HCl.

Table A-12.

ASSUMPTIONS AND ENERGY BALANCES for FIXED-HEARTH PYROLYZER W/ CO_2 RETENTION, System D-1

GENERAL COMMENTS: RGIBBS units calculate chemical and phase equilibrium with some restrictions, not all stated here. For detailed information refer to the ASPEN PLUS Release 9 input file. Chemical reactions and phase changes for some species are neglected. "Volatile" trace metals As, Cd, Hg, and Se are allowed to change phase, while Ba, Cr, Pb, and Ag are restricted to the solid phase. The pyrolyzer inlet fuel mixture (if used in place of cooling water) is composed of CH4 and 20% excess ***oxygen***. Design Spec's on vitrifier and SCC oxygen flows consider both free oxygen and that bound in organics.

Block Name (ASPEN Type)	Outlet Temp (F)	Heat Duty (MMBtu/hr)	Description and Assumptions
SCRUBSEP (SEP)	350	0	2-way separation of DRYSCRUB products. Vapors sent to CO2-ABS and remainder exits system.
CO2-ABS (RSTOIC)	1200	+2.079	Restricted chemical reaction combining CO2 and CaO to form CaCO3, assuming 100% utilization of the CO2. Heat duty does not include any losses.
ABSSEP (SEP)	1200	0	2-way separation of CO2-ABS products. Vapors sent to FLASH. Remainder, consisting only of CaCO3, sent to CO2-DES.
FLASH (FLASH2)	90	-11.996	1200 F inlet stream flashed at 90 F to separate liquid and vapor. Heat duty does not include any losses. Heat removed by an unspecified indirect heat exchange process.
EX-SPLIT (FSPLIT)	90	0	A split of the vapor stream exiting FLASH (predominately oxygen), with 90% recycled to PLENUM and 10% exiting system.
CO2-DES (RGIBBS)	1700	+2.444	Desorption of the CO2 from CaCO3, producing CaO. Heat duty does not include heat losses.
CO2-SEP (SEP)	1700	-0.562	2-way separation of CO2-DES products. CO2 is sent to GASQUENC and remainder, consisting only of CaO, sent to SPLIT. CaO (stream CAO-OUT) is flashed to 68 F at outlet to represent storage of the product before use.
SPLIT (FSPLIT)	68	0	A split of the solids stream from the separator CO2-SEP, recycling 90% of the CaO back to CO2-ABS. The remaining 10% is split between that going to DRYSCRUB for Cl2 and S removal (3.6%), and the rest exiting system to stabilization (6.4%).
CAOMIXER (MIXER)	68	0	Mixing of the recycled CaO with make-up CaO. Design Spec CAO: Vary inlet flow of make-up CaO to achieve an equal molar flow rate between the CO2 and the CaO as they enter the absorber (to produce CaCO3).
GASQUENC (RGIBBS)	350	0	Quenching of the 1700 F CO2 exhaust stream with water. No losses included. Design Spec QQUENCH2: Vary inlet water flow rate to achieve zero heat duty.
MELTER (RGIBBS)	3000	+0.120	Metal melter. Accepts metals with fixed contamination. Electrically heated with heat losses not included.

System E-1: Thermal Desorption

Table A-13.

ASSUMPTIONS and ENERGY BALANCES for THERMAL DESORPTION, System E-1

GENERAL COMMENTS: RGIBBS units calculate chemical and phase equilibrium with some restrictions, not all stated here. For detailed information refer to the ASPEN PLUS Release 9 input file. Chemical reactions and phase changes for some species are neglected. "Volatile" trace metals As, Cd, Hg, and Se are allowed to change phase, while Ba, Cr, Pb, and Ag are restricted to the solid phase. The inlet fuel mixture streams in this system are composed of CH4 and 20 % excess air. Design Spec's on air and oxygen flow consider both free oxygen and that bound in organics. ***NOTE***: In this model the organic-type products entering the desorber and condenser are not true components but only represent the elemental content of the streams; thus, the splitting off of the "volatile organics" following each unit is done by simply taking a percentage of the total stream flow, based on engineering judgment.

Block Name (ASPEN Type)	Outlet Temp (F)	Heat Duty (MMBtu/hr)	Description and Assumptions
DESORBER (RGIBBS)	600	+0.576	Thermal desorption unit. Accepts non-combustible wastes. Heating of the waste releases moisture and volatile organics. Heated indirectly. Heat losses not included here, but see HEATER unit below. H2, O2, and H2O restricted from reacting.
HEATER (RGIBBS)	1400	-0.605	Indirect heating of DESORBER. CH4-fueled. Design Spec QHEATER: Vary inlet fuel mixture flow (stream FUELMIX1) such that heat output is 5% greater than that needed to heat the desorber products, to account for losses.
SEPARATR (SEP)	600	0	2-way separation of DESORBER products. The organic-type products listed in the stream summary are not actual, but only reflect the elements present. Selection of the volatile fraction is based on engineering judgment. Assume 80% of the H2O is vaporized, the rest being bound in the concrete, etc. Assume 20% of all organic-type elements are in a vaporous state (including equilibrium amount of CH4). Remainder exits system (via stream SOLIDS) for grouting.
CONDENSR (RGIBBS)	80	-0.364	Condensing (actually occurs in 2 stages) of the exhaust "vapors" of DESORBER. H2, O2, and H2O restricted from reacting. Secondary cooling system unspecified. No distinction is made here between liquid and vapor products (as in models K1 and L1). Both are merely sent to kiln for combustion.

Table A-13.

ASSUMPTIONS and ENERGY BALANCES for THERMAL DESORPTION, System E-1

GENERAL COMMENTS: RGIBBS units calculate chemical and phase equilibrium with some restrictions, not all stated here. For detailed information refer to the ASPEN PLUS Release 9 input file. Chemical reactions and phase changes for some species are neglected. "Volatile" trace metals As, Cd, Hg, and Se are allowed to change phase, while Ba, Cr, Pb, and Ag are restricted to the solid phase. The inlet fuel mixture streams in this system are composed of CH4 and 20 % excess air. Design Spec's on air and oxygen flow consider both free oxygen and that bound in organics. ***NOTE***: In this model the organic-type products entering the desorber and condenser are not true components but only represent the elemental content of the streams; thus, the splitting off of the "volatile organics" following each unit is done by simply taking a percentage of the total stream flow, based on engineering judgment.

Block Name (ASPEN Type)	Outlet Temp (F)	Heat Duty (MMBtu/hr)	Description and Assumptions
KILN (RGIBBS)	1600	-0.360	Conventional rotary kiln. Accepts combustible wastes. CH4-fueled with air as oxidant. Heat losses assumed to be 5% of the sensible heat of the products. Includes fixed air leakage through seals. Chemical and phase equilibrium of Fe and Fe3O4 are restricted. Design Spec QKILN: Vary either inlet fuel mixture flow (if heat is needed) or inlet water flow (if cooling is needed) such that heat duty is 5% of that calculated for unit Q1. Design Spec OXI: Vary inlet air flow in stream AIR such that total inlet oxygen flow (minus that used by the CH4) is twice the outlet oxygen flow (100% excess). Design Spec SOILH2O: Vary inlet soil feed rate (substream MIXED, 10% of total flow) such that it is 1/30 the magnitude of the SLAG stream (ash-to-gross soil ratio of 2:1). Design Spec SOILSOL: Vary inlet soil feed rate (substream CISOLID, 90% of total flow) such that it is 1/3.333 the magnitude of the SLAG stream (ash-to-gross soil ratio of 2:1).
DUPL1 (DUPL)	1600	0	A stream duplicator block used to send a copy of the KILN outlet stream to the dummy unit Q1.
Q1 (RGIBBS)	68	-7.209	Dummy unit. This calculates chemical equilibrium at 1600 F, identical to unit KILN, but has an outlet temperature of 68 F, thus yielding an estimate of the sensible heat of the products of unit KILN.
KILNSEP (SEP)	1600	-0.051	2-way separation of KILN products: 80% of metals and oxides go to VITRIFY (via stream ASH). Remainder, including 100% of volatile trace metals and vapors, sent to SCC. Stream ASH flashed to 68 F to represent storage of material before use. (Heat duty may not be accurate.)
SCC (RGIBBS)	2200	-0.820	Secondary combustion unit. CH4-fueled with air as oxidant. Heat losses assumed to be 5% of the sensible heat of the products. Chemical and phase equilibrium of Fe and Fe3O4 are restricted. Design Spec QSCC: Vary inlet fuel mixture flow such that heat duty is 5% of that calculated for unit Q2.
DUPL2 (DUPL)	2200	0	A stream duplicator block used to send a copy of the SCC outlet stream to the dummy unit Q2.

Table A-13.

ASSUMPTIONS and ENERGY BALANCES for THERMAL DESORPTION, System E-1

GENERAL COMMENTS: RGIBBS units calculate chemical and phase equilibrium with some restrictions, not all stated here. For detailed information refer to the ASPEN PLUS Release 9 input file. Chemical reactions and phase changes for some species are neglected. "Volatile" trace metals As, Cd, Hg, and Se are allowed to change phase, while Ba, Cr, Pb, and Ag are restricted to the solid phase. The inlet fuel mixture streams in this system are composed of CH4 and 20 % excess air. Design Spec's on air and oxygen flow consider both free oxygen and that bound in organics. ***NOTE***: In this model the organic-type products entering the desorber and condenser are not true components but only represent the elemental content of the streams; thus, the splitting off of the "volatile organics" following each unit is done by simply taking a percentage of the total stream flow, based on engineering judgment.

Block Name (ASPEN Type)	Outlet Temp (F)	Heat Duty (MMBtu/hr)	Description and Assumptions
Q2 (RGIBBS)	68	-16.401	Dummy unit. This calculates chemical equilibrium at 2200 F, identical to unit SCC, but has an outlet temperature of 68 F, thus yielding an estimate of the sensible heat of the products of unit SCC.
QUENCH (RGIBBS)	350	0	Quenching of the exhaust of the SCC. No losses included. Formation of CH4, C, S and Cl2 is restricted. Chemical and phase equilibrium of Fe and Fe3O4 are restricted. Design Spec QQUENCH: Vary inlet water flow rate to achieve zero heat duty.
BAGHOUSE (SEP)	350	-0.002	3-way separation of QUENCH products. Vapors sent to SCRUB, volatile trace metals exit system (via stream HGPLUS), and remainder (soil + ash) recycles to VITRIFY (via FLYASH). Stream FLYASH flashed to 68 F to represent storage of material before use. (Heat duty may not be accurate.)
SCRUB (RGIBBS)	120	-14.423	Wet acid scrubber. Design Spec SCRUBH2O: Vary inlet water flow such that inlet liquid water flow equals 20 times outlet dissolved salts (5% TDS), with a minimum value equal to inlet NaOH flow (50% soln). Design Spec NAOH: Vary inlet NaOH flow such that inlet NaOH flow equals 100 times outlet NaOH flow (1% excess).
L-V-SEP (FLASH2)	120	0	2-way separation of SCRUB products. Flash calculation to separate liquid and vapor.
VITRIFY (RGIBBS)	3000	+1.561	Vitrifier. Heat duty does not include heat losses. Feed material enters at 68 F. Chemical and phase equilibrium of Fe and Fe3O4 are restricted.
L-V-SEP2 (FLASH2)	3000	0	2-way separation of VITRIFY products. Flash calculation to separate liquid and vapor. No vapor expected.
MELTER (RGIBBS)	3000	+0.120	Metal melter. Accepts metals with fixed contamination. Electrically heated with heat losses not included.

System F-1: Molten Salt Oxidation

Table A-14.

ASSUMPTIONS and ENERGY BALANCES for MOLTEN SALT OXIDATION, System F-1

GENERAL COMMENTS: RGIBBS units calculate chemical and phase equilibrium with some restrictions as stated. For detailed information refer to the ASPEN PLUS Release 9 input file. Chemical reactions and phase changes for some species are neglected. "Volatile" trace metals As, Cd, Hg, and Se are allowed to change phase, while Ba, Cr, Pb, and Ag are restricted to the solid phase. Inlet fuel mixture stream (FUELMIX2) is composed of CH4 and 20 % excess air (O2 and N2). Design Spec's on air and oxygen flow include both free oxygen and that bound in organics.

Block Name (ASPEN Type)	Outlet Temp (F)	Heat Duty (MMBtu/hr)	Description and Assumptions
MSO (RGIBBS)	1652	-3.980	Molten salt oxidation. Accepts combustible waste only. Unit requires heat removal as shown. Losses not included. Design Spec AIR: Vary inlet air flow (stream AIR) such that total inlet oxygen inlet flow equals 6 times outlet flow (20% excess). Design Spec SALT: Vary inlet Na2CO3 flow such that the outlet solids stream (MSO-BOT) contains 80% Na2CO3 and NaCl. This limits the ash content of the MSO unit to 20% to avoid solidification.
MSO-SEP (SEP)	1652	-0.312	2-way separation of MSO products. 100% of vapors and volatile trace metals sent to QUENCH. Remainder is flashed to 68 F and then sent to SALT-SEP (via MSO-BOT).
SALT-SEP (SEP)	1652	0	3-way separation of MSO salts and ash products representing a dissolving/filtering/drying process. 90% of Na2CO3 recycled to MSO (via SALT-90), 10% exits system as does the NaCl (actually will be as a solution with added water) (via SALTS). Remaining MSO products sent to VITRIFY via ASH.
QUENCH (RGIBBS)	350	0	Quenching of the exhaust vapors of MSO. Formation of CH4, C, and S is restricted. Design Spec QQUENCH: Vary inlet water flow rate to achieve zero heat duty.
BAGHOUSE (SEP)	350	0	3-way separation of QUENCH products, modeling the various filters. Vapors sent to SCRUB, 100% of volatile trace metals exit system (via HGPLUS), and remainder to VITRIFY.
SCRUB (RGIBBS)	120	-2.804	Wet acid scrubber. Design Spec SCRUBH2O: Vary inlet water flow such that inlet liquid water flow equals 20 times outlet dissolved salts (5% TDS), with a minimum value equal to inlet NaOH flow (50% soln). Design Spec NAOH: Vary inlet NaOH flow such that inlet NaOH flow equals 100 times outlet NaOH flow (1% excess).
L-V-SEP (FLASH2)	120	0	2-way separation of SCRUB products. Flash calculation to separate liquid and vapor.

Table A-14.

ASSUMPTIONS and ENERGY BALANCES for MOLTEN SALT OXIDATION, System F-1

GENERAL COMMENTS: RGIBBS units calculate chemical and phase equilibrium with some restrictions as stated. For detailed information refer to the ASPEN PLUS Release 9 input file. Chemical reactions and phase changes for some species are neglected. "Volatile" trace metals As, Cd, Hg, and Se are allowed to change phase, while Ba, Cr, Pb, and Ag are restricted to the solid phase. Inlet fuel mixture stream (FUELMIX2) is composed of CH4 and 20 % excess air (O2 and N2). Design Spec's on air and oxygen flow include both free oxygen and that bound in organics.

Block Name (ASPEN Type)	Outlet Temp (F)	Heat Duty (MMBtu/hr)	Description and Assumptions
FEED-SEP (SEP)	74	0	2-way separation of the feed material. SOLIDS stream goes to the unit representing the vitrifier molten pool, while the organic-type components go to the unit representing the vitrifier cover gas region. Five percent of the carbon and sulfur is assumed to end up trapped in the melt, and 5% of the solids are assumed to be carried off with the vapors.
VITRIFY (RGIBBS)	3000	+1.606	Virtifier molten pool. Accepts the non-organic portion of the combustible and non-combustible wastes. The organic portion of the non-combustible wastes is assumed to be volatilized and released to the plenum over the melt. Heat duty does not include any losses or the energy needed to heat and volatilize the organic portion of the non-combustible wastes. Design Spec SOILH2O: Vary inlet soil feed rate (substream MIXED, 10% of total flow) such that it is 1/30 the magnitude of the SLAG stream (ash-to-gross soil ratio of 2:1). Design Spec SOILSOL: Vary inlet soil feed rate (substream CISOLID, 90% of total flow) such that it is 1/3.333 the magnitude of the SLAG stream (ash-to-gross soil ratio of 2:1).
VIT-SEP (SEP)	3000	0	2-way separation of VITRIFY products: 100% of solids and liquids exit system (via stream SLAG). Any gases produced, as well as 100% of volatile trace metals, are sent to unit PLENUM.
PLENUM (RGIBBS)	1800	+0.736	Vitrifier plenum area. Organic constituents are volatilized and released from the melt into the plenum. Oxygen is injected into the zone, combusting the vapors. The heat duty does not include any losses. Formation of CH4 is restricted. Design Spec OXYGEN: Vary the inlet oxygen flow (stream OXYGEN) such that the total incoming unbound oxygen is 6.0 times the outlet oxygen flow (20% excess).
SCC2 (RGIBBS)	2200	-0.068	Secondary combustion unit. Further combustion of the vapors at a temperature to assure destruction of PCB's. CH4-fueled with air at 20% excess. Heat losses assumed to be 5% of the sensible heat of the products. Design Spec QSCC2: Vary inlet fuel mixture flow such that heat duty is 5% of that calculated for unit Q2.
DUPL2 (DUPL)	2200	0	A stream duplicator block used to send a copy of the SCC2 outlet stream to the dummy unit Q2.

Table A-14.

ASSUMPTIONS and ENERGY BALANCES for MOLTEN SALT OXIDATION, System F-1

GENERAL COMMENTS: RGIBBS units calculate chemical and phase equilibrium with some restrictions as stated. For detailed information refer to the ASPEN PLUS Release 9 input file. Chemical reactions and phase changes for some species are neglected. "Volatile" trace metals As, Cd, Hg, and Se are allowed to change phase, while Ba, Cr, Pb, and Ag are restricted to the solid phase. Inlet fuel mixture stream (FUELMIX2) is composed of CH4 and 20 % excess air (O2 and N2). Design Spec's on air and oxygen flow include both free oxygen and that bound in organics.

Block Name (ASPEN Type)	Outlet Temp (F)	Heat Duty (MMBtu/hr)	Description and Assumptions
Q2 (RGIBBS)	68	-1.357	Dummy unit. This calculates chemical equilibrium at 2200 F identical to unit SCC2, but has an outlet temperature of 68 F, thus yielding an estimate of the sensible heat of the products of SCC2.
QUENCH2 (RGIBBS)	350	0	Quenching of exhaust products from SCC2. Formation of CH4, C, and S is restricted. Design Spec QQUENCH2: Vary inlet water flow rate to achieve zero heat duty.
BAGHSE2 (SEP)	350	0	3-way separation of QUENCH2 products. Vapors exit system, volatile trace metals exit system (via HGPLUS2), and remainder (via FLYASH2) recycled to VITRIFY.
SCRUB-2 (RGIBBS)	120	-1.273	Wet acid scrubber. Design Spec SCRBH2O2: Vary inlet water flow such that inlet liquid water flow equals 20 times outlet dissolved salts (5% TDS), with a minimum value equal to inlet NaOH flow (50% soln). Design Spec NAOH-2: Vary inlet NaOH flow such that inlet NaOH flow equals 100 times outlet NaOH flow (1% excess).
L-V-SEP2 (FLASH2)	120	0	2-way separation of SCRUB products. Flash calculation to separate liquid and vapor.
MELTER (RGIBBS)	3000	+0.120	Metal melter. Accepts metals with fixed contamination. Electrically heated with heat losses not included.

System G-1: Molten Metal Waste Destruction

Table A-15. Page 1 of 2

ASSUMPTIONS and ENERGY BALANCES for MOLTEN METAL DESTRUCTION, System G-1

GENERAL COMMENTS: RGIBBS units calculate chemical and phase equilibrium with some restrictions as stated. For detailed information refer to the ASPEN PLUS Release 9 input file. Chemical reactions and phase changes for some species are neglected. "Volatile" trace metals As, Cd, Hg, and Se are allowed to change phase, while Ba, Cr, Pb, and Ag are restricted to the solid phase. Design Spec's on air and oxygen flow consider both free oxygen and that bound in organics.

Block Name (ASPEN Type)	Outlet Temp (F)	Heat Duty (MMBtu/hr)	Description and Assumptions
MM-CEP (RGIBBS)	2732	-5.138	Molten metal treatment. Accepts combustible and non-combustible wastes and metals with fixed contamination. Also accepts an additional 468 lbs/hr of contaminated metals. Energy input shown does not include losses. Operating in a reducing mode, oxygen is supplied at the rate of 12% of the combustible waste stream (FDWASTEC) on a mass basis. (Negligible amount of N2 cover gas also is used.) Formation of CH4 is restricted. Reduction of Fe3O4 is allowed. Design Spec LIME: Vary the inlet mass flow rate of dry lime (CaO) such that the inlet mole flow rate of lime equals 90% of the inlet mole flow rate of chlorine (Cl2) in the waste streams (90% effective scrubbing), assuming 100% utilization of the CaO. Design Spec SOILH2O: Vary inlet soil feed rate (substream MIXED, 10% of total flow) such that it is 1/30 the magnitude of the SLAG stream (ash-to-gross soil ratio of 2:1). Design Spec SOILSOL: Vary inlet soil feed rate (substream CISOLID, 90% of total flow) such that it is 1/3.333 the magnitude of the SLAG stream (ash-to-gross soil ratio of 2:1).
MM-SEP (SEP)	2732	0	3-way separation of MM-CEP products. 100% of metals to stream METAL. 80% of the carbon, sulfur, and metallic oxides and 100% of molten CaCl2 to stream SLAG. The remainder to stream OFFGAS.
QUENCH (RGIBBS)	200	-2.08	Indirect cooling of stream OFFGAS. Heat removal shown does not include losses. Formation of H2O, CH4, C, S and Cl is restricted.
SEPRATR (SEP)	200	0	3-way separation of QUENCH products. Fluids sent to FLUIDSEP, volatile trace metals exit system (via HGPLUS), and remainder recycle (via SOLIDS) to VITRIFY.
FLUIDSEP (FLASH2)	200	0	Flash calculation. At 200 F stream is nearly all vapor.

Table A-15.

ASSUMPTIONS and ENERGY BALANCES for MOLTEN METAL DESTRUCTION, System G-1

GENERAL COMMENTS: RGIBBS units calculate chemical and phase equilibrium with some restrictions as stated. For detailed information refer to the ASPEN PLUS Release 9 input file. Chemical reactions and phase changes for some species are neglected. "Volatile" trace metals As, Cd, Hg, and Se are allowed to change phase, while Ba, Cr, Pb, and Ag are restricted to the solid phase. Design Spec's on air and oxygen flow consider both free oxygen and that bound in organics.

Block Name (ASPEN Type)	Outlet Temp (F)	Heat Duty (MMBtu/hr)	Description and Assumptions
SCRUB (RGIBBS)	80	-0.089	Wet acid scrubber. Formation of CH4, C, S and Cl is restricted. Also, no reaction of CO and CO2 is allowed. Temperature must be reduced below 90 F to get liquid product. Design Spec SCRUBH2O: Vary inlet water flow such that inlet liquid water flow equals 20 times outlet dissolved salts (5% TDS), with a minimum value equal to inlet NaOH flow (50% soln). Design Spec NAOH: Vary the inlet NaOH flow rate such that it equals 100 times the outlet NaOH flow (1% excess).
L-V-SEP (FLASH2)	80	0	2-way separation of SCRUB products. Flash calculation to separate liquid and vapor.
CATALYST (RSTOIC)	1500	-3.834	Catalytic oxidation of hydrogen- and CO-rich exhaust gases. Heat removal shown does not include losses. Design Spec AIR: Vary the inlet air flow such that inlet oxygen flow equals twice outlet oxygen flow (100% excess).

System H-1: Steam Gasification

Table A-16. Page 1 of 3

ASSUMPTIONS and ENERGY BALANCES for STEAM GASIFICATION, System H-1

GENERAL COMMENTS: RGIBBS units calculate chemical and phase equilibrium with some restrictions as stated. For detailed information refer to the ASPEN PLUS Release 9 input file. Chemical reactions and phase changes for some species are neglected. "Volatile" trace metals As, Cd, Hg, and Se are allowed to change phase, while Ba, Cr, Pb, and Ag are restricted to the solid phase. Inlet fuel mixture streams (FUELMIX1 and FUELMIX2) are composed of CH4 and 20 % excess air (O2 and N2). Design Spec's on air and oxygen include both free oxygen and that bound in organics.

Block Name (ASPEN Type)	Outlet Temp (F)	Heat Duty (MMBtu/hr)	Description and Assumptions
GASIFIER (RSTOIC)	1400	+1.307	Steam gasification. Accepts combustible waste. Heat duty does not included losses, but see HEATER unit below. Reactions are (a) 90% conversion of carbon to CO and H2, (b) 100% conversion of chlorine to HCl, and 100% conversion of oxygen to equal parts CO2 and H2O. Design Spec STEAM: Vary inlet water flow (via stream STEAM) such that total inlet water flow equals 6 times outlet water flow (20% excess). This yields a steam-to-carbon ratio of about 1.5.
STEAMGEN (HEATER)	900	+0.645	Steam generator. Heats incoming water. Heat duty does not include losses, but see HEATER unit below.
HEATER (RGIBBS)	1400	-2.050	Indirect heating of GASIFIER and STEAMGEN units, including 5% losses. CH4-fueled with 20% excess air. Design Spec QHEATER: Vary inlet flow rate of air/fuel mixture (stream FUELMIX1) such that heat output is 5% greater than the combined heat duty of GASIFIER and STEAMGEN to account for heat losses in those units.
FILTERS (SEP)	1400	-0.053	2-way separation of GASIFIER products, modeling a group of filters. 100% of vapors sent to SCRUB. Remainder flashed to 68 F and sent to VITRIFY (via stream ASH).
SCRUB (RGIBBS)	160	-0.049	Wet acid scrubber. Formation of CH4, C, and S is restricted. Design Spec SCRUBH2O: Vary inlet water flow such that inlet liquid water flow equals 20 times outlet dissolved salts (5% TDS), with a minimum value equal to inlet NaOH flow (50% soln). Design Spec NAOH: Vary inlet NaOH flow such that inlet NaOH flow equals 100 times outlet NaOH flow (1% excess).
L-V-SEP (FLASH2)	160	0	2-way separation of SCRUB products. Flash calculation to separate liquid and vapor.
REHEAT (RGIBBS)	220	+0.046	Reheat (dry) the vapor stream from L-V-SEP before entry into CATALYST. Chemical reactions are restricted.
CATALYST (RSTOIC)	1500	-4.241	Catalytic oxidation of hydrogen- and CO-rich exhaust gases. Heat removal shown does not include losses. Design Spec AIR: Vary inlet air flow such that total inlet oxygen flow equals twice outlet oxygen flow (100% excess).

Table A-16.

ASSUMPTIONS and ENERGY BALANCES for STEAM GASIFICATION, System H-1

GENERAL COMMENTS: RGIBBS units calculate chemical and phase equilibrium with some restrictions as stated. For detailed information refer to the ASPEN PLUS Release 9 input file. Chemical reactions and phase changes for some species are neglected. "Volatile" trace metals As, Cd, Hg, and Se are allowed to change phase, while Ba, Cr, Pb, and Ag are restricted to the solid phase. Inlet fuel mixture streams (FUELMIX1 and FUELMIX2) are composed of CH4 and 20 % excess air (O2 and N2). Design Spec's on air and oxygen include both free oxygen and that bound in organics.

Block Name (ASPEN Type)	Outlet Temp (F)	Heat Duty (MMBtu/hr)	Description and Assumptions
FEED-SEP (SEP)	74	0	2-way separation of the feed material. SOLIDS stream goes to the unit representing the vitrifier molten pool, while the organic-type components go to the unit representing the vitrifier cover gas region. Five percent of the carbon and sulfur is assumed to end up trapped in the melt, and 5% of the solids are assumed to be carried off with the vapors.
VITRIFY (RGIBBS)	3000	+1.842	Virtifier molten pool. Accepts the non-organic portion of the combustible and non-combustible wastes. The organic portion of the non-combustible wastes is assumed to be volatilized during heating and released to the plenum over the melt. Heat duty does not include any losses or the energy needed to heat and volatilize the organic portion of the non-combustible wastes. Design Spec SOILH2O: Vary inlet soil feed rate (substream MIXED, 10% of total flow) such that it is 1/30 the magnitude of the SLAG stream (ash-to-gross soil ratio of 2:1). Design Spec SOILSOL: Vary inlet soil feed rate (substream CISOLID, 90% of total flow) such that it is 1/3.333 the magnitude of the SLAG stream (ash-to-gross soil ratio of 2:1).
VIT-SEP (SEP)	3000	0	2-way separation of VITRIFY products: 100% of solids and liquids exit system (via stream SLAG). Any gases produced, as well as 100% of volatile trace metals, are sent to unit PLENUM.
PLENUM (RGIBBS)	1800	+0.335	Vitrifier plenum area. Organic constituents are volatilized and released from the melt into the plenum. Oxygen is injected into the zone, combusting the vapors. The heat duty does not include any losses. Formation of CH4 is restricted. Design Spec OXYGEN: Vary the inlet oxygen flow (stream OXYGEN) such that the total incoming oxygen is 6.0 times the outlet oxygen flow (20% excess).
SCC2 (RGIBBS)	2200	-0.074	Secondary combustion unit. Further combustion of the vapors at a temperature to assure destruction of PCB's. CH4-fueled with air at 20% excess. Heat losses assumed to be 5% of the sensible heat of the products. Design Spec QSCC2: Vary inlet fuel mixture flow such that heat duty is 5% of that calculated for unit Q2.
DUPL2 (DUPL)	2200	0	A stream duplicator block used to send a copy of the SCC2 outlet stream to the dummy unit Q2.

Table A-16.

ASSUMPTIONS and ENERGY BALANCES for STEAM GASIFICATION, System H-1

GENERAL COMMENTS: RGIBBS units calculate chemical and phase equilibrium with some restrictions as stated. For detailed information refer to the ASPEN PLUS Release 9 input file. Chemical reactions and phase changes for some species are neglected. "Volatile" trace metals As, Cd, Hg, and Se are allowed to change phase, while Ba, Cr, Pb, and Ag are restricted to the solid phase. Inlet fuel mixture streams (FUELMIX1 and FUELMIX2) are composed of CH4 and 20 % excess air (O2 and N2). Design Spec's on air and oxygen include both free oxygen and that bound in organics.

Block Name (ASPEN Type)	Outlet Temp (F)	Heat Duty (MMBtu/hr)	Description and Assumptions
Q2 (RGIBBS)	68	-1.482	Dummy unit. This calculates chemical equilibrium at 2200 F identical to unit SCC2, but has an outlet temperature of 68 F, thus yielding an estimate of the sensible heat of the products of SCC2.
QUENCH2 (RGIBBS)	350	0	Quenching of exhaust products from SCC2. Formation of CH4, C, and S is restricted. Design Spec QQUENCH2: Vary inlet water flow rate to achieve zero heat duty.
BAGHSE2 (SEP)	350	0	3-way separation of QUENCH2 products. Vapors exit system, volatile trace metals exit system (via HGPLUS2), and remainder (via FLYASH2) recycled to VITRIFY.
SCRUB-2 (RGIBBS)	120	-1.38	Wet acid scrubber. Design Spec SCRBH2O2: Vary inlet water flow such that inlet liquid water flow equals 20 times outlet dissolved salts (5% TDS), with a minimum value equal to inlet NaOH flow (50% soln). Design Spec NAOH-2: Vary inlet NaOH flow such that inlet NaOH flow equals 100 times outlet NaOH flow (1% excess).
L-V-SEP2 (FLASH2)	120	0	2-way separation of SCRUB products. Flash calculation to separate liquid and vapor.
MELTER (RGIBBS)	3000	+0.120	Metal melter. Accepts metals with fixed contamination. Electrically heated with heat losses not included.

System J-1: Joule-Heated Vitrification

Table A-17. Page 1 of 2

ASSUMPTIONS and ENERGY BALANCES for JOULE-HEATED VITRIFICATION, System J-1

GENERAL COMMENTS: RGIBBS units calculate chemical and phase equilibrium with some restrictions as stated. For detailed information refer to the ASPEN PLUS Release 9 input file. Chemical reactions and phase changes for some species are neglected. "Volatile" trace metals As, Cd, Hg, and Se are allowed to change phase, while Ba, Cr, Pb, and Ag are restricted to the solid phase. Inlet fuel mixture stream (FUELMIX1) is composed of CH4 and 20 % excess air (O2 and N2). Design Spec's on air and oxygen flow include both free oxygen and that bound in organics.

Block Name (ASPEN Type)	Outlet Temp (F)	Heat Duty (MMBtu/hr)	Description and Assumptions
FEED-SEP (SEP)	70	0	2-way separation of the feed material. SOLIDS stream goes to the unit representing the vitrifier molten pool, while the organic-type components go to the unit representing the vitrifier cover gas region. Five percent of the carbon and sulfur is assumed to end up trapped in the melt, and 5% of the solids are assumed to be carried off with the vapors.
VITRIFY (RGIBBS)	3000	+2.723	Virtifier molten pool. Accepts the non-organic portion of the combustible and non-combustible wastes. The organic portion of the non-combustible wastes is assumed to be volatilized and released to the plenum over the melt. Heat duty does not include any losses or the energy needed to heat and volatilize the organic portion of the non-combustible wastes. Design Spec SOILH2O: Vary inlet soil feed rate (substream MIXED, 10% of total flow) such that it is 1/30 the magnitude of the SLAG stream (ash-to-gross soil ratio of 2:1). Design Spec SOILSOL: Vary inlet soil feed rate (substream CISOLID, 90% of total flow) such that it is 1/3.333 the magnitude of the SLAG stream (ash-to-gross soil ratio of 2:1).
VIT-SEP (SEP)	3000	0	2-way separation of VITRIFY products: 100% of solids and liquids exit system (via stream SLAG). Any gases produced, as well as 100% of volatile trace metals, are sent to unit PLENUM.
PLENUM (RGIBBS)	1800	-5.353	Vitrifier plenum area. Organic constituents are volatilized and released from the melt into the plenum. Oxygen is injected into the zone, combusting the vapors. The heat duty does not include any losses. Formation of CH4 is restricted. Design Spec OXYGEN: Vary the inlet oxygen flow (stream OXYGEN) such that the total incoming unbound oxygen is 6.0 times the outlet oxygen flow (20% excess).
SCC (RGIBBS)	2200	-0.205	Secondary combustion unit. Further combustion of the vapors at a temperature to assure destruction of PCB's. CH4-fueled with air at 20% excess. Heat losses assumed to be 5% of the sensible heat of the products. Design Spec QSCC: Vary inlet fuel mixture flow such that heat duty is 5% of that calculated for unit Q1.
DUPL1 (DUPL)	2200	0	A stream duplicator block used to send a copy of the SCC2 outlet stream to the dummy unit Q1.

Table A-17.

ASSUMPTIONS and ENERGY BALANCES for JOULE-HEATED VITRIFICATION, System J-1

GENERAL COMMENTS: RGIBBS units calculate chemical and phase equilibrium with some restrictions as stated. For detailed information refer to the ASPEN PLUS Release 9 input file. Chemical reactions and phase changes for some species are neglected. "Volatile" trace metals As, Cd, Hg, and Se are allowed to change phase, while Ba, Cr, Pb, and Ag are restricted to the solid phase. Inlet fuel mixture stream (FUELMIX1) is composed of CH4 and 20 % excess air (O2 and N2). Design Spec's on air and oxygen flow include both free oxygen and that bound in organics.

Block Name (ASPEN Type)	Outlet Temp (F)	Heat Duty (MMBtu/hr)	Description and Assumptions
Q1 (RGIBBS)	68	-4.102	Dummy unit. This calculates chemical equilibrium at 2200 F identical to unit SCC, but has an outlet temperature of 68 F, thus yielding an estimate of the sensible heat of the products of SCC.
QUENCH (RGIBBS)	350	0	Quenching of exhaust products from SCC. Formation of CH4, C, and S is restricted. Design Spec QQUENCH: Vary inlet water flow rate to achieve zero heat duty.
BAGHOUSE (SEP)	350	0	3-way separation of QUENCH products. Vapors exit system, volatile trace metals exit system (via HGPLUS), and remainder (via FLYASH) recycled to VITRIFY.
SCRUB (RGIBBS)	120	-3.78	Wet acid scrubber. Design Spec SCRUBH2O: Vary inlet water flow such that inlet liquid water flow equals 20 times outlet dissolved salts (5% TDS), with a minimum value equal to inlet NaOH flow (50% soln). Design Spec NAOH: Vary inlet NaOH flow such that inlet NaOH flow equals 100 times outlet NaOH flow (1% excess).
L-V-SEP (FLASH2)	120	0	2-way separation of SCRUB products. Flash calculation to separate liquid and vapor.
MELTER (RGIBBS)	3000	+0.120	Metal melter. Accepts metals with fixed contamination. Electrically heated with heat losses not included.

System K-1: Thermal Desorption and Mediated Electrochemical Oxidation

Table A-18.

ASSUMPTIONS and ENERGY BALANCES for THERMAL DESORBER W/ MEO, System K-1

GENERAL COMMENTS: RGIBBS units calculate chemical and phase equilibrium with some restrictions as stated. For detailed information refer to the ASPEN PLUS Release 9 input file. Chemical reactions and phase changes for some species are neglected. "Volatile" trace metals As, Cd, Hg, and Se are allowed to change phase, while Ba, Cr, Pb, and Ag are restricted to the solid phase. Inlet fuel mixture stream (FUELMIX1) is composed of CH4 and 20 % excess air (O2 and N2). Design Spec's on oxygen flow include both free oxygen and that bound in organics. ***NOTE***: The organic-type products entering the desorber and condenser are not true components but only represent the elemental content of the streams; thus, the splitting off of the "volatile organics" following each unit is done by simply taking a percentage of the total stream flow, based on engineering judgment.

Block Name (ASPEN Type)	Outlet Temp (F)	Heat Duty (MMBtu/hr)	Description and Assumptions
DESORBER (RGIBBS)	600	+0.743	Thermal desorption unit. Accepts combustible and non-combustible wastes. Here the combustible waste stream has had the halogenated and non-halogenated organic liquids and the oils removed for direct feed into the MEO-UNIT. Heating of the waste releases moisture and volatile organics. Heated indirectly. Heat losses not included here, but see HEATER unit below. H2, O2, and H2O restricted from reacting.
HEATER (RGIBBS)	1400	-0.780	Indirect heating of DESORBER. CH4-fueled. Design Spec QHEATER: Vary inlet fuel mixture flow (stream FUELMIX1) such that heat output is 5% greater than that needed to heat the desorber products, to account for losses.
SEPRATR (SEP)	600	0	2-way separation of DESORBER products. The organic-type products listed in the stream summary are not actual, but only reflect the elements present. Selection of the volatile fraction is based on engineering judgment. Assume 80% of the H2O is vaporized, the rest being bound in the concrete, etc. Assume 20% of all organic-type elements are in a vaporous state (including equilibrium amount of CH4). Remainder exits system (via stream SOLIDS) for grouting.
CONDENSR (RGIBBS)	80	-0.408	Condensing (actually occurs in 2 stages) of the exhaust "vapors" of DESORBER. H2, O2, and H2O restricted from reacting. Secondary cooling system unspecified.
COND-SEP (SEP)	80	0	3-way separation of CONDENSR products. Assume largest fraction (90%) of ALL components (except volatile trace metals) reform to liquid state and go to MEO-UNIT. Volatile trace metals are trapped and exit system (via HGPLUS), and remainder of products are "vapors" sent to catalytic oxidation.

Table A-18.

ASSUMPTIONS and ENERGY BALANCES for THERMAL DESORBER W/ MEO, System K-1

GENERAL COMMENTS: RGIBBS units calculate chemical and phase equilibrium with some restrictions as stated. For detailed information refer to the ASPEN PLUS Release 9 input file. Chemical reactions and phase changes for some species are neglected. "Volatile" trace metals As, Cd, Hg, and Se are allowed to change phase, while Ba, Cr, Pb, and Ag are restricted to the solid phase. Inlet fuel mixture stream (FUELMIX1) is composed of CH4 and 20 % excess air (O2 and N2). Design Spec's on oxygen flow include both free oxygen and that bound in organics. ***NOTE***: The organic-type products entering the desorber and condenser are not true components but only represent the elemental content of the streams; thus, the splitting off of the "volatile organics" following each unit is done by simply taking a percentage of the total stream flow, based on engineering judgment.

Block Name (ASPEN Type)	Outlet Temp (F)	Heat Duty (MMBtu/hr)	Description and Assumptions
MEO-UNIT (RSTOIC)	140	+1.003	Mediated electrochemical oxidation. Accepts as feed the portion of the combustible waste not fed to the desorber, in addition to the aqueous liquids waste. Unit requires heat removal as shown. Losses not included. The makeup electrolyte feed shown includes mainly water and CoSO4, as 99% of the H2SO4 in the electrolyte is assumed to be recycled. WATER stream supplies additional oxygen if not enough in CONDENS8 stream. Only vapor exits this unit. Allowed reactions are decomposition of all water and oxidation of all C, CO, CH4, and HCL. (Note that electrolyte water is specified as a second water component and does not take part in the reactions.) Design Spec OXIDANT: Vary inlet water flow stream (WATER) such that total inlet oxygen flow (O2 and H2O) equals 6 times outlet oxygen flow (O2) (20% excess). Design Spec ELECTMIX: Vary the electrolyte makeup flow rate (stream ELECTROL, substream MIXED) such that the makeup water is 6.82 times greater than the inlet organic flow rate (i.e., all but the water in streams FDAQORGS, FDWOLIQS, and CONDENS8). (See comments within the model as to origin of the factor 6.82.) Design Spec ELECTSOL: Vary the flow rate of the solids (CoSO4) portion of the electrolyte makeup stream to maintain the correct CoSO4/water ratio.
MEO-SEP (SEP)	140	0	Separation of H2 from other vapors. Hydrogen comes off of cathode terminal, while other gasses are produced at anode.
SCRUB (RGIBBS)	120	-0.022	Wet acid scrubber. No restriction on formation of products. Design Spec SCRUBH2O: Vary inlet water flow such that inlet liquid water flow equals 20 times outlet dissolved salts (5% TDS), with a minimum value equal to inlet NaOH flow (50% soln). Design Spec NAOH: Vary inlet NaOH flow such that inlet NaOH flow equals 100 times outlet NaOH flow (1% excess).
L-V-SEP (FLASH2)	120	0	2-way separation of SCRUB products. Flash calculation to separate liquid and vapor.

Table A-18.

ASSUMPTIONS and ENERGY BALANCES for THERMAL DESORBER W/ MEO, System K-1

GENERAL COMMENTS: RGIBBS units calculate chemical and phase equilibrium with some restrictions as stated. For detailed information refer to the ASPEN PLUS Release 9 input file. Chemical reactions and phase changes for some species are neglected. "Volatile" trace metals As, Cd, Hg, and Se are allowed to change phase, while Ba, Cr, Pb, and Ag are restricted to the solid phase. Inlet fuel mixture stream (FUELMIX1) is composed of CH4 and 20 % excess air (O2 and N2). Design Spec's on oxygen flow include both free oxygen and that bound in organics. ***NOTE***: The organic-type products entering the desorber and condenser are not true components but only represent the elemental content of the streams; thus, the splitting off of the "volatile organics" following each unit is done by simply taking a percentage of the total stream flow, based on engineering judgment.

Block Name (ASPEN Type)	Outlet Temp (F)	Heat Duty (MMBtu/hr)	Description and Assumptions
CATALYST (RSTOIC)	1500	-0.97	Catalytic oxidizer. Heat removal required. Losses not included. Chemical reactions limited to oxidation of C, CO, H2, and CH4. Design Spec AIR: Vary inlet air flow rate such that total inlet oxygen flow (O2) equals twice the outlet oxygen flow (100% excess).
MELTER (RGIBBS)	3000	+0.120	Metal melter. Accepts metals with fixed contamination. Electrically heated with heat losses not included.

System L-1: Thermal Desorption and Supercritical Water Oxidation

Table A-19. Page 1 of 3

ASSUMPTIONS and ENERGY BALANCES for THERMAL DESORBER W/ SCWO, System L-1

GENERAL COMMENTS: RGIBBS units calculate chemical and phase equilibrium with some restrictions as stated. For detailed information refer to the ASPEN PLUS Release 9 input file. Chemical reactions and phase changes for some species are neglected. "Volatile" trace metals As, Cd, Hg, and Se are allowed to change phase, while Ba, Cr, Pb, and Ag are restricted to the solid phase. Inlet fuel mixture streams (FUELMIX1 and FUELMIX2) are composed of CH4 and 20 % excess air (O2 and N2). Design Spec's on air and oxygen flow include both free oxygen and that bound in organics. ***NOTE***: In the model the organic-type products entering the desorber and condenser are not true components but only represent the elemental content of the streams; thus, the splitting off of the "volatile organics" following each unit is done by simply taking a percentage of the total stream flow, based on engineering judgment.

Block Name (ASPEN Type)	Outlet Temp (F)	Heat Duty (MMBtu/hr)	Description and Assumptions
DESORBER (RGIBBS)	600	+0.743	Thermal desorption unit. Accepts combustible and non-combustible wastes. Here the combustible waste stream has had the halogenated and non-halogenated organic liquids and the oils removed for direct feed into the MEO-UNIT. Heating of the waste releases moisture and volatile organics. Heated indirectly. Heat losses not included here, but see HEATER unit below. H2, O2, and H2O restricted from reacting.
HEATER (RGIBBS)	1400	-0.780	Indirect heating of DESORBER. CH4-fueled. Design Spec QHEATER: Vary inlet fuel mixture flow (stream FUELMIX1) such that heat output is 5% greater than that needed to heat the desorber products, to account for losses.
SEPRATR (SEP)	600	0	2-way separation of DESORBER products. The organic-type products listed in the stream summary are not actual, but only reflect the elements present. Selection of the volatile fraction is based on engineering judgment. Assume 80% of the H2O is vaporized, the rest being bound in the concrete, etc. Assume 20% of all organic-type elements are in a vaporous state (including equilibrium amount of CH4). Remainder exits system (via stream SOLIDS) for grouting.
CONDENSR (RGIBBS)	80	-0.408	Condensing (actually occurs in 2 stages) of the exhaust "vapors" of DESORBER. H2, O2, and H2O restricted from reacting. Secondary cooling fluid unspecified.
COND-SEP (SEP)	80	0	3-way separation of CONDENSR products. Assume largest fraction (90%) of ALL components (except volatile trace metals) reform to liquid state and go to PUMP. Volatile trace metals are trapped and exit system (via HGPLUS), and remainder of products are "vapors" sent to catalytic oxidation.
5-STAGEC (MCOMPR)	80	-0.109 +40 HP	5-stage, isentropic compressor unit with interstage cooling for compressing of oxygen. No losses included. Pressurizes to 3200 psia. Assumed mechanical efficiency of 100%, isentropic efficiency of 72%.

Table A-19.

ASSUMPTIONS and ENERGY BALANCES for THERMAL DESORBER W/ SCWO, System L-1

GENERAL COMMENTS: RGIBBS units calculate chemical and phase equilibrium with some restrictions as stated. For detailed information refer to the ASPEN PLUS Release 9 input file. Chemical reactions and phase changes for some species are neglected. "Volatile" trace metals As, Cd, Hg, and Se are allowed to change phase, while Ba, Cr, Pb, and Ag are restricted to the solid phase. Inlet fuel mixture streams (FUELMIX1 and FUELMIX2) are composed of CH4 and 20 % excess air (O2 and N2). Design Spec's on air and oxygen flow include both free oxygen and that bound in organics. ***NOTE***: In the model the organic-type products entering the desorber and condenser are not true components but only represent the elemental content of the streams; thus, the splitting off of the "volatile organics" following each unit is done by simply taking a percentage of the total stream flow, based on engineering judgment.

Block Name (ASPEN Type)	Outlet Temp (F)	Heat Duty (MMBtu/hr)	Description and Assumptions
PUMP (PUMP)	309	0 +975 HP (727 KW)	Pump (or group of pumps) for compressing of the liquid feeds and any liquid produced at each stage of compression. No losses included. Pressurizes to 3200 psia. Assumed efficiency of 68.1%.
SCWO (RGIBBS)	800	0	Super critical water oxidation. No losses included. Design Spec OXYGEN: Vary inlet oxygen flow rate (stream OXYGEN) such that total inlet oxygen flow is 6 times outlet oxygen flow (20% excess). Design Spec NAOH: Vary inlet NaOH flow such that inlet NaOH flow equals 50 times outlet NaOH flow (2% excess). (Note 1% excess, as used elsewhere, caused convergence problems in this unit.) Design Spec QSCWO: Vary water inlet flow rate such that heat duty is zero.
SCWO-SEP (SEP)	800	0	3-way separation of SCWO products. Assume a recycle stream back to SCWO (currently set to zero). A salt solution stream (SALTSOLN) takes out all of the salts (excess NaOH, NaCl, and NaF) at a specified concentration. The remainder of the water, the gases and the rest go to stream OTHER. Design Spec SALT: Vary the flow split of the water to achieve 5.67 times as much water as salts (NaCl and NaF) in stream SALTSOLN (15% solution).
FLASH (FLASH2)	150	-4.191	2-way separation of the gases and bottoms in the OTHER stream. The gases exit the system. The bottoms go to the EVAPOR8R. The depressurization of stream OTHER from 3200 psia is assumed to occur in this unit, hence the large heat removal required.
EVAPOR8R (FLASH2)	212	+3.122	Heating of the salt solution and bottoms streams to drive off water and concentrate the solution. The depressurization of stream SALTSOLN from 3200 psia is assumed to occur in this unit, hence the large heat removal required. Design Spec LIQUOR: Vary the outlet temperature to yield equal flow rate of salts and water in stream CONCSOLN (50% solution).
CONDENS2 (FLASH2)	100	-3.627	Condensing of water vapor from unit EVAPOR8R. Any non-condensables get sent back to unit FLASH.

Table A-19.

ASSUMPTIONS and ENERGY BALANCES for THERMAL DESORBER W/ SCWO, System L-1

GENERAL COMMENTS: RGIBBS units calculate chemical and phase equilibrium with some restrictions as stated. For detailed information refer to the ASPEN PLUS Release 9 input file. Chemical reactions and phase changes for some species are neglected. "Volatile" trace metals As, Cd, Hg, and Se are allowed to change phase, while Ba, Cr, Pb, and Ag are restricted to the solid phase. Inlet fuel mixture streams (FUELMIX1 and FUELMIX2) are composed of CH4 and 20 % excess air (O2 and N2). Design Spec's on air and oxygen flow include both free oxygen and that bound in organics. ***NOTE***: In the model the organic-type products entering the desorber and condenser are not true components but only represent the elemental content of the streams; thus, the splitting off of the "volatile organics" following each unit is done by simply taking a percentage of the total stream flow, based on engineering judgment.

Block Name (ASPEN Type)	Outlet Temp (F)	Heat Duty (MMBtu/hr)	Description and Assumptions
CATALYST (RSTOIC)	1500	-0.003	Catalytic oxidizer. Heat removal required. Losses not included. Chemical reactions limited to oxidation of C, CO, H2, and CH4. Design Spec AIR: Vary inlet air flow rate such that total inlet oxygen flow (O2) equals twice the outlet oxygen flow (100% excess).
MELTER (RGIBBS)	3000	+0.120	Metal melter. Accepts metals with fixed contamination. Electrically heated with heat losses not included.

Appendix B

ASPEN PLUS Input Files

Appendix B

ASPEN PLUS Input Files

NOTE: The following input files show the entire models with all design spec's and other options active. In actually converging the models it is sometimes necessary (and most times advantageous) to selectively turn off design spec's and other options at the early stages of the run. Thus, if one attempts to reproduce the reported results with these input files (if the runs converge at all) they will only be identical to within the tolerances set in the model. The files have also been edited somewhat for this report for clarity and to conserve space.

System A-1

```
TITLE 'ITTS PHASE I - CONVENTIONAL ROTARY KILN - SYSA1-4 (main)'

IN-UNITS ENG

DEF-STREAMS MIXCISLD ALL

DIAGNOSTICS
    TERMINAL SIM-LEVEL=8 CONV-LEVEL=8

SIM-OPTIONS MW-CALC=YES

RUN-CONTROL MAX-TIME=1800

DESCRIPTION "
        ACCEPTS COMBUSTIBLE AND NON-COMBUSTIBLE WASTE, AND METAL FOR MELTING.
        "

DATABANKS COMBUST  / INORGANIC  / PURECOMP  / SOLIDS  /  &
        NOASPENPCD

PROP-SOURCES COMBUST  / INORGANIC  / PURECOMP  / SOLIDS

COMPONENTS
    H2 H2 H2 /
    O2 O2 O2 /
    N2 N2 N2 /
    CL2 CL2 CL2 /
    F2 F2 F2 /
    NO NO NO /
    SO2 O2S SO2 /
    H2O H2O H2O /
    CO2 CO2 CO2 /
    CO CO CO /
    HCL HCL HCL /
    CH4 CH4 CH4 /
    C-S C C-S /
    S-S S S-S /
    S S S /
    NAOH-S NAOH NAOH-S /
    NACL-S NACL NACL-S /
    NAF-S NAF NAF-S /
    AS AS AS /
    CD CD CD /
    HG HG HG /
    SE SE SE /
    FE FE FE /
```

```
    SIO2 SIO2 SIO2 /
    AL2O3 AL2O3 AL2O3 /
    FE-S FE FE-S /
    SIO2-S SIO2 SIO2-S /
    AL2O3-S AL2O3 AL2O3-S /
    AS-S AS AS-S /
    BA-S BA BA-S /
    CD-S CD CD-S /
    CR-S CR CR-S /
    PB-S PB PB-S /
    SE-S SE SE-S /
    AG-S AG AG-S /
    CACO3-S CACO3 CACO3-S /
    MGO-S MGO MGO-S /
    NA2O-S NA2O NA2O-S /
    K2O-S K2O K2O-S /
    FE3O4 FE3O4 FE3O4 /
    FE3O4-S FE3O4 FE3O4-S /
    CAO-S CAO CAO-S

FLOWSHEET
    BLOCK KILN IN=FDWASTEN SOIL FUELMIX1 FDWASTEC AIR  &
        AIRLEAKS COOLH2O OUT=OUT1
    BLOCK KILNSEP IN=KILNOUT OUT=ASH KILNVAP
    BLOCK SCC IN=KILNVAP FUELMIX2 OUT=OUT2
    BLOCK BAGHOUSE IN=QUENCHED OUT=HGPLUS FLYASH QNCHVAP
    BLOCK QUENCH IN=SCCOUT QNCH2O OUT=QUENCHED
    BLOCK L-V-SEP IN=SCRUBOUT OUT=SCRUBVAP SCRUBBOT
    BLOCK DUPL1 IN=OUT1 OUT=KILNOUT DUM1IN
    BLOCK Q1 IN=DUM1IN OUT=DUM1OUT
    BLOCK DUPL2 IN=OUT2 OUT=SCCOUT DUM2IN
    BLOCK Q2 IN=DUM2IN OUT=DUM2OUT
    BLOCK VITRIFY IN=FLYASH ASH OUT=VITOUT
    BLOCK L-V-SEP2 IN=VITOUT OUT=VITVAP SLAG
    BLOCK SCRUB IN=NAOH SCRUBH2O QNCHVAP OUT=SCRUBOUT
    BLOCK MELTER IN=FDMETMLT OUT=METAL

PROPERTIES SOLIDS
    PROPERTIES IDEAL / RKS-BM

PROP-SET ALL-SUBS TEMP PRES VFRAC UNITS='ATM' SUBSTREAM=ALL

PROP-SET SET1 VLSTDMX UNITS='CUFT/HR' SUBSTREAM=MIXED

STREAM AIR
    SUBSTREAM MIXED TEMP=68 PRES=1 <ATM> MASS-FLOW=5000
    MASS-FRAC O2 0.233 / N2 0.767

STREAM AIRLEAKS
    SUBSTREAM MIXED TEMP=68 PRES=1 <ATM>  &
        VOLUME-FLOW=600 <CUFT/MIN>
    MASS-FRAC O2 0.233 / N2 0.767

STREAM COOLH2O
    SUBSTREAM MIXED TEMP=68 PRES=1 <ATM> MASS-FLOW=1
    MASS-FRAC H2O 1

STREAM FDMETMLT
    SUBSTREAM MIXED TEMP=68 PRES=1 <ATM> MASS-FLOW=1.20
    MASS-FLOW H2 2.42
    SUBSTREAM CISOLID TEMP=68 PRES=1 <ATM> MASS-FLOW=147.80
    MASS-FLOW C-S 14.44 / FE-S 282.02 / SIO2-S 0.035 /  &
```

```
        AL2O3-S 0.035 / BA-S 0.87 / CD-S 0.18

STREAM FDWASTEC
    SUBSTREAM MIXED TEMP=68 PRES=1 <ATM>
    MASS-FLOW H2 50.95 / O2 92.76 / N2 0.23 / CL2 53.02 /  &
        F2 0.11 / H2O 19.83
    SUBSTREAM CISOLID TEMP=68 PRES=1 <ATM>
    MASS-FLOW C-S 326.28 / S-S 0.49 / FE-S 7.67 / SIO2-S  &
        53.01 / AL2O3-S 53.01 / BA-S 0.77 / CD-S 0.77 / CR-S 1.53

STREAM FDWASTEN
    SUBSTREAM MIXED TEMP=68 PRES=1 <ATM>
    MASS-FLOW H2 0.54 / O2 1.44 / N2 0.01 / CL2 14.88 /  &
        NO 0.66 / SO2 0.83 / H2O 354.23 / HG 0.15
    SUBSTREAM CISOLID TEMP=68 PRES=1 <ATM>
    MASS-FLOW C-S 4.77 / S-S 0.62 / SIO2-S 476.77 /  &
        AL2O3-S 476.77 / AS-S 0.06 / BA-S 0.04 / CD-S 2.63  &
        / CR-S 4.95 / PB-S 0.17 / SE-S 0.03 / AG-S 0.03

STREAM FUELMIX1
    SUBSTREAM MIXED TEMP=68 PRES=1 <ATM> MASS-FLOW=1
    MASS-FRAC O2 0.222 / N2 0.732 / CH4 0.046

STREAM FUELMIX2
    SUBSTREAM MIXED TEMP=68 PRES=1 <ATM> MASS-FLOW=1
    MASS-FRAC O2 0.222 / N2 0.732 / CH4 0.046

STREAM NAOH
    SUBSTREAM MIXED TEMP=68 PRES=1 <ATM>
    SUBSTREAM CISOLID TEMP=68 PRES=1 <ATM> MASS-FLOW=80
    MASS-FRAC NAOH-S 1

STREAM OUT1
    SUBSTREAM MIXED TEMP=2500 PRES=1 <ATM>
    MASS-FLOW O2 1293 / N2 14610 / NO 27 / SO2 3 / H2O  &
        1977 / CO2 2598 / HCL 70 / FE3O4 45
    SUBSTREAM CISOLID TEMP=2500 PRES=1 <ATM>
    MASS-FLOW SIO2-S 1069 / AL2O3-S 739 / CR-S 8 / MGO-S  &
        18 / NA2O-S 10 / K2O-S 19 / CAO-S 56

STREAM QNCH2O
    SUBSTREAM MIXED TEMP=68 PRES=1 <ATM> MASS-FLOW=1
    MASS-FRAC H2O 1

STREAM QUENCHED
    SUBSTREAM MIXED TEMP=350 PRES=1 <ATM>
    MASS-FLOW O2 1446 / N2 17490 / CL2 29 / H2O 16320 /  &
        CO2 3088 / HCL 40
    SUBSTREAM CISOLID TEMP=350 PRES=1 <ATM>
    MASS-FLOW SIO2-S 221 / AL2O3-S 148 / CD-S 3.3 / CR-S  &
        1.62 / MGO-S 3.6 / NA2O-S 2 / K2O-S 3.75 / FE3O4-S 9

STREAM SCRUBH2O
    SUBSTREAM MIXED TEMP=68 PRES=1 <ATM> MASS-FLOW=1
    MASS-FRAC H2O 1

STREAM SCRUBOUT
    SUBSTREAM MIXED TEMP=120 PRES=1 <ATM>
    MASS-FLOW O2 1452 / N2 17490 / H2O 373000 / CO2 3088
    SUBSTREAM CISOLID TEMP=120 PRES=1 <ATM>
    MASS-FLOW NACL-S 112
```

```
STREAM SOIL
    SUBSTREAM MIXED TEMP=68 PRES=1 <ATM> MASS-FLOW=62.5
    MASS-FLOW H2O 0.1
    SUBSTREAM CISOLID TEMP=68 PRES=1 <ATM> MASS-FLOW=562.5
    MASS-FLOW SIO2-S 0.569 / AL2O3-S 0.102 / CACO3-S 0.128 /  &
        MGO-S 0.023 / NA2O-S 0.013 / K2O-S 0.024 / FE3O4-S 0.041

BLOCK BAGHOUSE SEP
    FRAC STREAM=HGPLUS SUBSTREAM=MIXED COMPS=H2 O2 N2 CL2  &
        F2 NO SO2 H2O CO2 CO HCL CH4 C-S S-S S NAOH-S  &
        NACL-S NAF-S AS CD HG SE FE SIO2 AL2O3 FE-S SIO2-S  &
        AL2O3-S AS-S BA-S CD-S CR-S PB-S SE-S AG-S CACO3-S  &
        MGO-S NA2O-S K2O-S FE3O4 FE3O4-S CAO-S FRACS=0 0 0  &
        0 0 0 0 0 0 0 0 0 0 0 0 0 0 0 1 1 1 1 0 0  &
        0 0 0 0 1 0 1 0 0 1 0 0 0 0 0 0 0 0
    FRAC STREAM=HGPLUS SUBSTREAM=CISOLID COMPS=C-S S-S NAOH-S  &
        NACL-S NAF-S FE-S SIO2-S AL2O3-S AS-S BA-S CD-S CR-S  &
        PB-S SE-S AG-S CACO3-S MGO-S NA2O-S K2O-S FE3O4-S  &
        CAO-S FRACS=0 0 0 0 0 0 0 0 1 0 1 0 0 1 0 0 0 0 0 0 0
    FRAC STREAM=FLYASH SUBSTREAM=MIXED COMPS=H2 O2 N2 CL2  &
        F2 NO SO2 H2O CO2 CO HCL CH4 C-S S-S S NAOH-S  &
        NACL-S NAF-S AS CD HG SE FE SIO2 AL2O3 FE-S SIO2-S  &
        AL2O3-S AS-S BA-S CD-S CR-S PB-S SE-S AG-S CACO3-S  &
        MGO-S NA2O-S K2O-S FE3O4 FE3O4-S CAO-S FRACS=0 0 0  &
        0 0 0 0 0 0 0 0 0 1 1 1 1 1 1 0 0 0 0 1 1  &
        1 1 1 1 0 1 0 1 1 0 1 1 1 1 1 1 1 1
    FRAC STREAM=FLYASH SUBSTREAM=CISOLID COMPS=C-S S-S NAOH-S  &
        NACL-S NAF-S FE-S SIO2-S AL2O3-S AS-S BA-S CD-S CR-S  &
        PB-S SE-S AG-S CACO3-S MGO-S NA2O-S K2O-S FE3O4-S  &
        CAO-S FRACS=1 1 1 1 1 1 1 1 0 1 0 1 1 0 1 1 1 1 1 1 1
    FLASH-SPECS FLYASH TEMP=68 PRES=1 <ATM>

BLOCK KILNSEP SEP
    FRAC STREAM=ASH SUBSTREAM=MIXED COMPS=H2 O2 N2 CL2 F2  &
        NO SO2 H2O CO2 CO HCL CH4 C-S S-S S NAOH-S NACL-S  &
        NAF-S AS CD HG SE FE SIO2 AL2O3 FE-S SIO2-S AL2O3-S  &
        AS-S BA-S CD-S CR-S PB-S SE-S AG-S CACO3-S MGO-S  &
        NA2O-S K2O-S FE3O4 FE3O4-S CAO-S FRACS=0 0 0 0 0 0  &
        0 0 0 0 0 0 .8 .8 0 .8 .8 .8 0 0 0 0 .8 .8  &
        .8 .8 .8 .8 .8 .8 .8 .8 .8 .8 .8 .8 .8 .8 .8 .8 .8 .8
    FRAC STREAM=ASH SUBSTREAM=CISOLID COMPS=C-S S-S NAOH-S  &
        NACL-S NAF-S FE-S SIO2-S AL2O3-S AS-S BA-S CD-S CR-S  &
        PB-S SE-S AG-S CACO3-S MGO-S NA2O-S K2O-S FE3O4-S  &
        CAO-S FRACS=.8 .8 .8 .8 .8 .8 .8 .8 .8 .8 .8 .8  &
        .8 .8 .8 .8 .8 .8 .8 .8 .8
    FLASH-SPECS ASH TEMP=68 PRES=1 <ATM>

BLOCK L-V-SEP FLASH2
    PARAM TEMP=120 PRES=1 <ATM>

BLOCK L-V-SEP2 FLASH2
    PARAM TEMP=3000 PRES=1 <ATM>

BLOCK KILN RGIBBS
    PARAM TEMP=1600 PRES=1 <ATM> NPHASE=2
    PROD H2 / O2 / N2 / CL2 / F2 / NO / SO2 / H2O /  &
        CO2 / CO / HCL / AS / CD / HG / SE / FE-S SS  &
        / SIO2-S SS / AL2O3-S SS / AS-S SS / BA-S SS /  &
        CD-S SS / CR-S SS / PB-S SS / SE-S SS / AG-S SS  &
        / MGO-S SS / NA2O-S SS / K2O-S SS / FE3O4-S SS /  &
        CAO-S SS
    PROD-FRAC FE-S 1 / FE3O4-S 1
```

```
BLOCK MELTER RGIBBS
    PARAM TEMP=3000 PRES=1 <ATM> NPHASE=2
    PROD H2 / C-S SS / FE / SIO2 / AL2O3 / FE-S SS /  &
        SIO2-S SS / AL2O3-S SS / BA-S SS / CD / CD-S SS

BLOCK Q1 RGIBBS
    PARAM TEMP=68 PRES=1 <ATM> NPHASE=2 TAPP=1532
    PROD H2 / O2 / N2 / CL2 / F2 / NO / SO2 / H2O /  &
        CO2 / CO / HCL / AS / CD / HG / SE / FE-S SS  &
        / SIO2-S SS / AL2O3-S SS / AS-S SS / BA-S SS /  &
        CD-S SS / CR-S SS / PB-S SS / SE-S SS / AG-S SS  &
        / MGO-S SS / NA2O-S SS / K2O-S SS / FE3O4-S SS /  &
        CAO-S SS
    PROD-FRAC FE-S 1 / FE3O4-S 1

BLOCK Q2 RGIBBS
    PARAM TEMP=68 PRES=1 <ATM> NPHASE=2 CHEMEQ=YES TAPP=2132
    PROD H2 / O2 / N2 / CL2 / F2 / NO / SO2 / H2O /  &
        CO2 / CO / HCL / CH4 / S / AS / CD / HG / SE  &
        / FE-S SS / SIO2-S SS / AL2O3-S SS / BA-S SS /  &
        CR-S SS / PB-S SS / AG-S SS / MGO-S SS / NA2O-S  &
        SS / K2O-S SS / FE3O4-S SS / CAO-S SS
    PROD-FRAC FE-S 1 / FE3O4-S 1

BLOCK QUENCH RGIBBS
    PARAM TEMP=350 PRES=1 <ATM> NPHASE=2
    PROD H2 / O2 / N2 / F2 / NO / SO2 / H2O / CO2 /  &
        CO / HCL / AS / CD / HG / SE / FE-S SS /  &
        SIO2-S SS / AL2O3-S SS / AS-S SS / BA-S SS /  &
        CD-S SS / CR-S SS / PB-S SS / SE-S SS / AG-S SS  &
        / MGO-S SS / NA2O-S SS / K2O-S SS / FE3O4-S SS /  &
        CAO-S SS
    PROD-FRAC FE-S 1 / FE3O4-S 1

BLOCK SCC RGIBBS
    PARAM TEMP=2200 PRES=1 <ATM> NPHASE=2
    PROD H2 / O2 / N2 / CL2 / F2 / NO / SO2 / H2O /  &
        CO2 / CO / HCL / CH4 / S / AS / CD / HG / SE  &
        / FE-S SS / SIO2-S SS / AL2O3-S SS / BA-S SS /  &
        CR-S SS / PB-S SS / AG-S SS / MGO-S SS / NA2O-S  &
        SS / K2O-S SS / FE3O4-S SS / CAO-S SS
    PROD-FRAC FE-S 1 / FE3O4-S 1

BLOCK SCRUB RGIBBS
    PARAM TEMP=120 PRES=1 <ATM> NPHASE=2
    PROD H2 / O2 / N2 / CL2 / F2 / NO / SO2 / H2O / CO2  &
         CO / HCL / NAOH-S SS / NACL-S SS / NAF-S SS

BLOCK VITRIFY RGIBBS
    PARAM TEMP=3000 PRES=1 <ATM> NPHASE=2
    PROD H2 / O2 / N2 / CL2 / F2 / NO / SO2 / H2O /  &
        CO2 / CO / HCL / C-S / S / AS / CD / HG / SE  &
        / FE-S SS / SIO2 / AL2O3 / AS-S SS / BA-S SS /  &
        CD-S SS / CR-S SS / PB-S SS / SE-S SS / AG-S SS  &
        / MGO-S SS / NA2O-S SS / K2O-S SS / FE3O4-S SS /  &
        CAO-S SS
    PROD-FRAC FE-S 1 / FE3O4-S 1

BLOCK DUPL1 DUPL

BLOCK DUPL2 DUPL
```

```
DESIGN-SPEC NAOH
    DEFINE CAUIN MASS-FLOW STREAM=NAOH SUBSTREAM=CISOLID  &
        COMPONENT=NAOH-S
    DEFINE CAUOUT MASS-FLOW STREAM=SCRUBOUT SUBSTREAM=CISOLID  &
        COMPONENT=NAOH-S
    SPEC "CAUIN-100.*CAUOUT" TO "0"
    TOL-SPEC "0.01"
    VARY STREAM-VAR STREAM=NAOH SUBSTREAM=CISOLID  &
        VARIABLE=MASS-FLOW
    LIMITS "70" "1000"

DESIGN-SPEC OXI
    DEFINE AIR MASS-FLOW STREAM=AIR SUBSTREAM=MIXED  &
        COMPONENT=O2
    DEFINE WC MASS-FLOW STREAM=FDWASTEC SUBSTREAM=MIXED  &
        COMPONENT=O2
    DEFINE WN MASS-FLOW STREAM=FDWASTEN SUBSTREAM=MIXED  &
        COMPONENT=O2
    DEFINE F1 MASS-FLOW STREAM=FUELMIX1 SUBSTREAM=MIXED  &
        COMPONENT=O2
    DEFINE OXOUT MASS-FLOW STREAM=KILNOUT SUBSTREAM=MIXED  &
        COMPONENT=O2
    DEFINE AL MASS-FLOW STREAM=AIRLEAKS SUBSTREAM=MIXED  &
        COMPONENT=O2
    SPEC "AL+AIR+WC+WN+(F1/6.0)" TO "2.0*OXOUT"
    TOL-SPEC "1  "
    VARY STREAM-VAR STREAM=AIR SUBSTREAM=MIXED  &
        VARIABLE=MASS-FLOW
    LIMITS "1" "10000"

DESIGN-SPEC QKILN
    DEFINE QKILN BLOCK-VAR BLOCK=KILN VARIABLE=QCALC  &
        SENTENCE=PARAM
    DEFINE Q1 BLOCK-VAR BLOCK=Q1 VARIABLE=QCALC SENTENCE=PARAM
    SPEC "QKILN" TO "0.05*Q1"
    TOL-SPEC "10."
    VARY STREAM-VAR STREAM=COOLH2O SUBSTREAM=MIXED  &
        VARIABLE=MASS-FLOW
    LIMITS "1" "50000"

DESIGN-SPEC QQUENCH
    DEFINE QQNCH BLOCK-VAR BLOCK=QUENCH VARIABLE=QCALC  &
        SENTENCE=PARAM
    SPEC "QQNCH" TO "0"
    TOL-SPEC "1."
    VARY STREAM-VAR STREAM=QNCH2O SUBSTREAM=MIXED  &
        VARIABLE=MASS-FLOW
    LIMITS "1" "20000"

DESIGN-SPEC QSCC
    DEFINE QSCC BLOCK-VAR BLOCK=SCC VARIABLE=QCALC  &
        SENTENCE=PARAM
    DEFINE Q2 BLOCK-VAR BLOCK=Q2 VARIABLE=QCALC SENTENCE=PARAM
    SPEC "QSCC" TO "0.05*Q2"
    TOL-SPEC "10."
    VARY STREAM-VAR STREAM=FUELMIX2 SUBSTREAM=MIXED  &
        VARIABLE=MASS-FLOW
    LIMITS "1" "100000"

DESIGN-SPEC SOILH2O
    DEFINE SLAG1 STREAM-VAR STREAM=SLAG SUBSTREAM=MIXED  &
        VARIABLE=MASS-FLOW
```

```
    DEFINE SLAG2 STREAM-VAR STREAM=SLAG SUBSTREAM=CISOLID  &
        VARIABLE=MASS-FLOW
    DEFINE SOIL STREAM-VAR STREAM=SOIL SUBSTREAM=MIXED  &
        VARIABLE=MASS-FLOW
    SPEC "30.*SOIL" TO "SLAG1+SLAG2"
    TOL-SPEC "0.01"
    VARY STREAM-VAR STREAM=SOIL SUBSTREAM=MIXED  &
        VARIABLE=MASS-FLOW
    LIMITS "1" "1000"

DESIGN-SPEC SOILSOL
    DEFINE SLAG1 STREAM-VAR STREAM=SLAG SUBSTREAM=MIXED  &
        VARIABLE=MASS-FLOW
    DEFINE SLAG2 STREAM-VAR STREAM=SLAG SUBSTREAM=CISOLID  &
        VARIABLE=MASS-FLOW
    DEFINE SOIL STREAM-VAR STREAM=SOIL SUBSTREAM=CISOLID  &
        VARIABLE=MASS-FLOW
    SPEC "3.33333*SOIL" TO "SLAG1+SLAG2"
    TOL-SPEC "0.01"
    VARY STREAM-VAR STREAM=SOIL SUBSTREAM=CISOLID  &
        VARIABLE=MASS-FLOW
    LIMITS "1" "1000"

DESIGN-SPEC SCRUBH2O
    DEFINE MASSAL STREAM-VAR STREAM=SCRUBBOT SUBSTREAM=CISOLID  &
        VARIABLE=MASS-FLOW
    DEFINE SCRUB STREAM-VAR STREAM=SCRUBH2O SUBSTREAM=MIXED  &
        VARIABLE=MASS-FLOW
    DEFINE NAOH STREAM-VAR STREAM=NAOH SUBSTREAM=CISOLID  &
        VARIABLE=MASS-FLOW
    SPEC "SCRUB " TO "20*MASSAL"
    TOL-SPEC "0.01"
    VARY STREAM-VAR STREAM=SCRUBH2O SUBSTREAM=MIXED  &
        VARIABLE=MASS-FLOW
    LIMITS "NAOH" "5000"

CONV-OPTIONS
    SECANT MAX-STEP-SIZ=.05 BRACKET=YES

STREAM-REPOR NOSORT MOLEFLOW MASSFLOW PROPERTIES=SET1 ALL-SUBS
```

System A-2

```
TITLE 'ITTS PHASE I - ROTARY KILN W/ OXYGEN - SYSA2-4 (main)'

IN-UNITS ENG

DEF-STREAMS MIXCISLD ALL

DIAGNOSTICS
    TERMINAL SIM-LEVEL=8 CONV-LEVEL=8

SIM-OPTIONS MW-CALC=YES

RUN-CONTROL MAX-TIME=1800

DESCRIPTION "
        ACCEPTS COMBUSTIBLE AND NON-COMBUSTIBLE WASTE, AND METAL FOR MELTING.
        "

DATABANKS COMBUST  / INORGANIC  / PURECOMP  / SOLIDS  /  &
        NOASPENPCD

PROP-SOURCES COMBUST  / INORGANIC  / PURECOMP  / SOLIDS

COMPONENTS
    H2 H2 H2 /
    O2 O2 O2 /
    N2 N2 N2 /
    CL2 CL2 CL2 /
    F2 F2 F2 /
    NO NO NO /
    SO2 O2S SO2 /
    H2O H2O H2O /
    CO2 CO2 CO2 /
    CO CO CO /
    HCL HCL HCL /
    CH4 CH4 CH4 /
    C-S C C-S /
    S-S S S-S /
    S S S /
    NAOH-S NAOH NAOH-S /
    NACL-S NACL NACL-S /
    NAF-S NAF NAF-S /
    AS AS AS /
    CD CD CD /
    HG HG HG /
    SE SE SE /
    FE FE FE /
    SIO2 SIO2 SIO2 /
    AL2O3 AL2O3 AL2O3 /
    FE-S FE FE-S /
    SIO2-S SIO2 SIO2-S /
    AL2O3-S AL2O3 AL2O3-S /
    AS-S AS AS-S /
    BA-S BA BA-S /
    CD-S CD CD-S /
    CR-S CR CR-S /
    PB-S PB PB-S /
    SE-S SE SE-S /
    AG-S AG AG-S /
    CACO3-S CACO3 CACO3-S /
```

```
    MGO-S MGO MGO-S /
    NA2O-S NA2O NA2O-S /
    K2O-S K2O K2O-S /
    FE3O4 FE3O4 FE3O4 /
    FE3O4-S FE3O4 FE3O4-S /
    CAO-S CAO CAO-S

FLOWSHEET
    BLOCK KILN IN=FDWASTEN SOIL FUELMIX1 FDWASTEC OXYGEN  &
        AIRLEAKS COOLH2O OUT=OUT1
    BLOCK KILNSEP IN=KILNOUT OUT=ASH KILNVAP
    BLOCK SCC IN=KILNVAP FUELMIX2 OUT=OUT2
    BLOCK BAGHOUSE IN=QUENCHED OUT=HGPLUS FLYASH QNCHVAP
    BLOCK QUENCH IN=SCCOUT QNCH2O OUT=QUENCHED
    BLOCK L-V-SEP IN=SCRUBOUT OUT=SCRUBVAP SCRUBBOT
    BLOCK DUPL1 IN=OUT1 OUT=KILNOUT DUM1IN
    BLOCK Q1 IN=DUM1IN OUT=DUM1OUT
    BLOCK DUPL2 IN=OUT2 OUT=SCCOUT DUM2IN
    BLOCK Q2 IN=DUM2IN OUT=DUM2OUT
    BLOCK VITRIFY IN=FLYASH ASH OUT=VITOUT
    BLOCK L-V-SEP2 IN=VITOUT OUT=VITVAP SLAG
    BLOCK SCRUB IN=NAOH SCRUBH2O QNCHVAP OUT=SCRUBOUT
    BLOCK MELTER IN=FDMETMLT OUT=METAL

PROPERTIES SOLIDS
    PROPERTIES IDEAL / RKS-BM

PROP-SET ALL-SUBS TEMP PRES VFRAC UNITS='ATM' SUBSTREAM=ALL

PROP-SET SET1 VLSTDMX UNITS='CUFT/HR' SUBSTREAM=MIXED

STREAM AIRLEAKS
    SUBSTREAM MIXED TEMP=68 PRES=1 <ATM>  &
        VOLUME-FLOW=600 <CUFT/MIN>
    MASS-FRAC O2 0.233 / N2 0.767

STREAM COOLH2O
    SUBSTREAM MIXED TEMP=68 PRES=1 <ATM> MASS-FLOW=1
    MASS-FRAC H2O 1

STREAM FDMETMLT
    SUBSTREAM MIXED TEMP=68 PRES=1 <ATM> MASS-FLOW=1.20
    MASS-FLOW H2 2.42
    SUBSTREAM CISOLID TEMP=68 PRES=1 <ATM> MASS-FLOW=147.80
    MASS-FLOW C-S 14.44 / FE-S 282.02 / SIO2-S 0.035 /  &
        AL2O3-S 0.035 / BA-S 0.87 / CD-S 0.18

STREAM FDWASTEC
    SUBSTREAM MIXED TEMP=68 PRES=1 <ATM>
    MASS-FLOW H2 50.95 / O2 92.76 / N2 0.23 / CL2 53.02 /  &
        F2 0.11 / H2O 19.83
    SUBSTREAM CISOLID TEMP=68 PRES=1 <ATM>
    MASS-FLOW C-S 326.28 / S-S 0.49 / FE-S 7.67 / SIO2-S  &
        53.01 / AL2O3-S 53.01 / BA-S 0.77 / CD-S 0.77 /  &
        CR-S 1.53

STREAM FDWASTEN
    SUBSTREAM MIXED TEMP=68 PRES=1 <ATM>
    MASS-FLOW H2 0.54 / O2 1.44 / N2 0.01 / CL2 14.88 /  &
        NO 0.66 / SO2 0.83 / H2O 354.23 / HG 0.15
    SUBSTREAM CISOLID TEMP=68 PRES=1 <ATM>
    MASS-FLOW C-S 4.77 / S-S 0.62 / SIO2-S 476.77 /  &
```

```
        AL2O3-S 476.77 / AS-S 0.06 / BA-S 0.04 / CD-S 2.63  &
        / CR-S 4.95 / PB-S 0.17 / SE-S 0.03 / AG-S 0.03

STREAM FUELMIX1
    SUBSTREAM MIXED TEMP=68 PRES=1 <ATM> MASS-FLOW=1
    MASS-FLOW O2 0.222 / CH4 0.046

STREAM FUELMIX2
    SUBSTREAM MIXED TEMP=68 PRES=1 <ATM> MASS-FLOW=2000
    MASS-FLOW O2 0.222 / CH4 0.046

STREAM NAOH
    SUBSTREAM MIXED TEMP=68 PRES=1 <ATM>
    SUBSTREAM CISOLID TEMP=68 PRES=1 <ATM> MASS-FLOW=80
    MASS-FRAC NAOH-S 1

STREAM OUT1
    SUBSTREAM MIXED TEMP=2500 PRES=1 <ATM>
    MASS-FLOW O2 1293 / N2 14610 / NO 27 / SO2 3 / H2O  &
        1977 / CO2 2598 / HCL 70 / FE3O4 45
    SUBSTREAM CISOLID TEMP=2500 PRES=1 <ATM>
    MASS-FLOW SIO2-S 1069 / AL2O3-S 739 / CR-S 8 / MGO-S  &
        18 / NA2O-S 10 / K2O-S 19 / CAO-S 56

STREAM OXYGEN
    SUBSTREAM MIXED TEMP=68 PRES=1 <ATM> MASS-FLOW=2000
    MASS-FRAC O2 1

STREAM QNCH2O
    SUBSTREAM MIXED TEMP=68 PRES=1 <ATM> MASS-FLOW=1
    MASS-FRAC H2O 1

STREAM QUENCHED
    SUBSTREAM MIXED TEMP=350 PRES=1 <ATM>
    MASS-FLOW O2 1446 / N2 17490 / CL2 29 / H2O 16320 /  &
        CO2 3088 / HCL 40
    SUBSTREAM CISOLID TEMP=350 PRES=1 <ATM>
    MASS-FLOW SIO2-S 221 / AL2O3-S 148 / CD-S 3.3 / CR-S  &
        1.62 / MGO-S 3.6 / NA2O-S 2 / K2O-S 3.75 /  &
        FE3O4-S 9

STREAM SCRUBH2O
    SUBSTREAM MIXED TEMP=68 PRES=1 <ATM> MASS-FLOW=1
    MASS-FRAC H2O 1

STREAM SCRUBOUT
    SUBSTREAM MIXED TEMP=120 PRES=1 <ATM>
    MASS-FLOW O2 1452 / N2 17490 / H2O 373000 / CO2 3088
    SUBSTREAM CISOLID TEMP=120 PRES=1 <ATM>
    MASS-FLOW NACL-S 112

STREAM SOIL
    SUBSTREAM MIXED TEMP=68 PRES=1 <ATM> MASS-FLOW=62.5
    MASS-FLOW H2O 0.1
    SUBSTREAM CISOLID TEMP=68 PRES=1 <ATM> MASS-FLOW=562.5
    MASS-FLOW SIO2-S 0.569 / AL2O3-S 0.102 / CACO3-S 0.128 /  &
        MGO-S 0.023 / NA2O-S 0.013 / K2O-S 0.024 / FE3O4-S  &
        0.041

BLOCK BAGHOUSE SEP
    FRAC STREAM=HGPLUS SUBSTREAM=MIXED COMPS=H2 O2 N2 CL2  &
        F2 NO SO2 H2O CO2 CO HCL CH4 C-S S-S S NAOH-S  &
```

```
        NACL-S NAF-S AS CD HG SE FE SIO2 AL2O3 FE-S SIO2-S  &
        AL2O3-S AS-S BA-S CD-S CR-S PB-S SE-S AG-S CACO3-S  &
        MGO-S NA2O-S K2O-S FE3O4 FE3O4-S CAO-S FRACS=0 0 0  &
        0 0 0 0 0 0 0 0 0 0 0 0 0 0 0 1 1 1 1 0 0  &
        0 0 0 0 1 0 1 0 0 1 0 0 0 0 0 0 0 0
    FRAC STREAM=HGPLUS SUBSTREAM=CISOLID COMPS=C-S S-S NAOH-S  &
        NACL-S NAF-S FE-S SIO2-S AL2O3-S AS-S BA-S CD-S CR-S  &
        PB-S SE-S AG-S CACO3-S MGO-S NA2O-S K2O-S FE3O4-S  &
        CAO-S FRACS=0 0 0 0 0 0 0 0 1 0 1 0 0 1 0 0 0 0 0 0 0
    FRAC STREAM=FLYASH SUBSTREAM=MIXED COMPS=H2 O2 N2 CL2  &
        F2 NO SO2 H2O CO2 CO HCL CH4 C-S S-S S NAOH-S  &
        NACL-S NAF-S AS CD HG SE FE SIO2 AL2O3 FE-S SIO2-S  &
        AL2O3-S AS-S BA-S CD-S CR-S PB-S SE-S AG-S CACO3-S  &
        MGO-S NA2O-S K2O-S FE3O4 FE3O4-S CAO-S FRACS=0 0 0  &
        0 0 0 0 0 0 0 0 0 1 1 1 1 1 1 0 0 0 0 1 1  &
        1 1 1 1 0 1 0 1 1 0 1 1 1 1 1 1 1 1
    FRAC STREAM=FLYASH SUBSTREAM=CISOLID COMPS=C-S S-S NAOH-S  &
        NACL-S NAF-S FE-S SIO2-S AL2O3-S AS-S BA-S CD-S CR-S  &
        PB-S SE-S AG-S CACO3-S MGO-S NA2O-S K2O-S FE3O4-S  &
        CAO-S FRACS=1 1 1 1 1 1 1 1 0 1 0 1 1 0 1 1 1 1 1 1 1
    FLASH-SPECS FLYASH TEMP=68 PRES=1 <ATM>

BLOCK KILNSEP SEP
    FRAC STREAM=ASH SUBSTREAM=MIXED COMPS=H2 O2 N2 CL2 F2  &
        NO SO2 H2O CO2 CO HCL CH4 C-S S-S S NAOH-S NACL-S  &
        NAF-S AS CD HG SE FE SIO2 AL2O3 FE-S SIO2-S AL2O3-S  &
        AS-S BA-S CD-S CR-S PB-S SE-S AG-S CACO3-S MGO-S  &
        NA2O-S K2O-S FE3O4 FE3O4-S CAO-S FRACS=0 0 0 0 0 0  &
        0 0 0 0 0 0 .8 .8 0 .8 .8 .8 0 0 0 0 .8 .8  &
        .8 .8 .8 .8 .8 .8 .8 .8 .8 .8 .8 .8 .8 .8 .8 .8 .8 .8
    FRAC STREAM=ASH SUBSTREAM=CISOLID COMPS=C-S S-S NAOH-S  &
        NACL-S NAF-S FE-S SIO2-S AL2O3-S AS-S BA-S CD-S CR-S  &
        PB-S SE-S AG-S CACO3-S MGO-S NA2O-S K2O-S FE3O4-S  &
        CAO-S FRACS=.8 .8 .8 .8 .8 .8 .8 .8 .8 .8 .8 .8  &
        .8 .8 .8 .8 .8 .8 .8 .8 .8
    FLASH-SPECS ASH TEMP=68 PRES=1 <ATM>

BLOCK L-V-SEP FLASH2
    PARAM TEMP=120 PRES=1 <ATM>

BLOCK L-V-SEP2 FLASH2
    PARAM TEMP=3000 PRES=1 <ATM>

BLOCK KILN RGIBBS
    PARAM TEMP=1600 PRES=1 <ATM> NPHASE=2
    PROD H2 / O2 / N2 / CL2 / F2 / NO / SO2 / H2O /  &
        CO2 / CO / HCL / AS / CD / HG / SE / FE-S SS  &
        / SIO2-S SS / AL2O3-S SS / AS-S SS / BA-S SS /  &
        CD-S SS / CR-S SS / PB-S SS / SE-S SS / AG-S SS  &
        / MGO-S SS / NA2O-S SS / K2O-S SS / FE3O4-S SS /  &
        CAO-S SS
    PROD-FRAC FE-S 1 / FE3O4-S 1

BLOCK MELTER RGIBBS
    PARAM TEMP=3000 PRES=1 <ATM> NPHASE=2
    PROD H2 / C-S SS / FE / SIO2 / AL2O3 / FE-S SS /  &
        SIO2-S SS / AL2O3-S SS / BA-S SS / CD / CD-S SS

BLOCK Q1 RGIBBS
    PARAM TEMP=68 PRES=1 <ATM> NPHASE=2 TAPP=1532
    PROD H2 / O2 / N2 / CL2 / F2 / NO / SO2 / H2O /  &
        CO2 / CO / HCL / AS / CD / HG / SE / FE-S SS  &
```

```
        / SIO2-S SS / AL2O3-S SS / AS-S SS / BA-S SS /  &
        CD-S SS / CR-S SS / PB-S SS / SE-S SS / AG-S SS  &
        / MGO-S SS / NA2O-S SS / K2O-S SS / FE3O4-S SS /  &
        CAO-S SS
    PROD-FRAC FE-S 1 / FE3O4-S 1

BLOCK Q2 RGIBBS
    PARAM TEMP=68 PRES=1 <ATM> NPHASE=2 CHEMEQ=YES TAPP=2132
    PROD H2 / O2 / N2 / CL2 / F2 / NO / SO2 / H2O /  &
        CO2 / CO / HCL / CH4 / S / AS / CD / HG / SE  &
        / FE-S SS / SIO2-S SS / AL2O3-S SS / BA-S SS /  &
        CR-S SS / PB-S SS / AG-S SS / MGO-S SS / NA2O-S  &
        SS / K2O-S SS / FE3O4-S SS / CAO-S SS
    PROD-FRAC FE-S 1 / FE3O4-S 1

BLOCK QUENCH RGIBBS
    PARAM TEMP=350 PRES=1 <ATM> NPHASE=2
    PROD H2 / O2 / N2 / F2 / NO / SO2 / H2O / CO2 /  &
        CO / HCL / AS / CD / HG / SE / FE-S SS /  &
        SIO2-S SS / AL2O3-S SS / AS-S SS / BA-S SS /  &
        CD-S SS / CR-S SS / PB-S SS / SE-S SS / AG-S SS  &
        / MGO-S SS / NA2O-S SS / K2O-S SS / FE3O4-S SS /  &
        CAO-S SS
    PROD-FRAC FE-S 1 / FE3O4-S 1

BLOCK SCC RGIBBS
    PARAM TEMP=2200 PRES=1 <ATM> NPHASE=2 MAXIT=200
    PROD H2 / O2 / N2 / CL2 / F2 / NO / SO2 / H2O /  &
        CO2 / CO / HCL / CH4 / S / AS / CD / HG / SE  &
        / FE-S SS / SIO2-S SS / AL2O3-S SS / BA-S SS /  &
        CR-S SS / PB-S SS / AG-S SS / MGO-S SS / NA2O-S  &
        SS / K2O-S SS / FE3O4-S SS / CAO-S SS
    PROD-FRAC FE-S 1 / FE3O4-S 1

BLOCK SCRUB RGIBBS
    PARAM TEMP=120 PRES=1 <ATM> NPHASE=2
    PROD H2 / O2 / N2 / CL2 / F2 / NO / SO2 / H2O /  &
        CO2 / CO / HCL / NAOH-S SS / NACL-S SS / NAF-S SS

BLOCK VITRIFY RGIBBS
    PARAM TEMP=3000 PRES=1 <ATM> NPHASE=2
    PROD H2 / O2 / N2 / CL2 / F2 / NO / SO2 / H2O /  &
        CO2 / CO / HCL / C-S / S / AS / CD / HG / SE  &
        / FE-S SS / SIO2 / AL2O3 / AS-S SS / BA-S SS /  &
        CD-S SS / CR-S SS / PB-S SS / SE-S SS / AG-S SS  &
        / MGO-S SS / NA2O-S SS / K2O-S SS / FE3O4-S SS /  &
        CAO-S SS
    PROD-FRAC FE-S 1 / FE3O4-S 1

BLOCK DUPL1 DUPL

BLOCK DUPL2 DUPL

DESIGN-SPEC NAOH
    DEFINE CAUIN MASS-FLOW STREAM=NAOH SUBSTREAM=CISOLID  &
        COMPONENT=NAOH-S
    DEFINE CAUOUT MASS-FLOW STREAM=SCRUBOUT SUBSTREAM=CISOLID  &
        COMPONENT=NAOH-S
    SPEC "CAUIN-100.*CAUOUT" TO "0"
    TOL-SPEC "0.01"
    VARY STREAM-VAR STREAM=NAOH SUBSTREAM=CISOLID  &
        VARIABLE=MASS-FLOW
```

```
    LIMITS "70" "1000"

DESIGN-SPEC OXI
    DEFINE OXIN MASS-FLOW STREAM=OXYGEN SUBSTREAM=MIXED  &
        COMPONENT=O2
    DEFINE WC MASS-FLOW STREAM=FDWASTEC SUBSTREAM=MIXED  &
        COMPONENT=O2
    DEFINE WN MASS-FLOW STREAM=FDWASTEN SUBSTREAM=MIXED  &
        COMPONENT=O2
    DEFINE F1 MASS-FLOW STREAM=FUELMIX1 SUBSTREAM=MIXED  &
        COMPONENT=O2
    DEFINE OXOUT MASS-FLOW STREAM=KILNOUT SUBSTREAM=MIXED  &
        COMPONENT=O2
    DEFINE AL MASS-FLOW STREAM=AIRLEAKS SUBSTREAM=MIXED  &
        COMPONENT=O2
    SPEC "AL+OXIN+WC+WN+(F1/6.0)" TO "2.0*OXOUT"
    TOL-SPEC "1  "
    VARY STREAM-VAR STREAM=OXYGEN SUBSTREAM=MIXED  &
        VARIABLE=MASS-FLOW
    LIMITS "1" "10000"

DESIGN-SPEC QKILN
    DEFINE QKILN BLOCK-VAR BLOCK=KILN VARIABLE=QCALC  &
        SENTENCE=PARAM
    DEFINE Q1 BLOCK-VAR BLOCK=Q1 VARIABLE=QCALC SENTENCE=PARAM
    SPEC "QKILN" TO "0.05*Q1"
    TOL-SPEC "10."
    VARY STREAM-VAR STREAM=COOLH2O SUBSTREAM=MIXED  &
        VARIABLE=MASS-FLOW
    LIMITS "1" "50000"

DESIGN-SPEC QQUENCH
    DEFINE QQNCH BLOCK-VAR BLOCK=QUENCH VARIABLE=QCALC  &
        SENTENCE=PARAM
    SPEC "QQNCH" TO "0"
    TOL-SPEC "1."
    VARY STREAM-VAR STREAM=QNCH2O SUBSTREAM=MIXED  &
        VARIABLE=MASS-FLOW
    LIMITS "1" "20000"

DESIGN-SPEC QSCC
    DEFINE QSCC BLOCK-VAR BLOCK=SCC VARIABLE=QCALC  &
        SENTENCE=PARAM
    DEFINE Q2 BLOCK-VAR BLOCK=Q2 VARIABLE=QCALC SENTENCE=PARAM
    SPEC "QSCC" TO "0.05*Q2"
    TOL-SPEC "1."
    VARY STREAM-VAR STREAM=FUELMIX2 SUBSTREAM=MIXED  &
        VARIABLE=MASS-FLOW
    LIMITS "1" "100000"

DESIGN-SPEC SOILH2O
    DEFINE SLAG1 STREAM-VAR STREAM=SLAG SUBSTREAM=MIXED  &
        VARIABLE=MASS-FLOW
    DEFINE SLAG2 STREAM-VAR STREAM=SLAG SUBSTREAM=CISOLID  &
        VARIABLE=MASS-FLOW
    DEFINE SOIL STREAM-VAR STREAM=SOIL SUBSTREAM=MIXED  &
        VARIABLE=MASS-FLOW
    SPEC "30.*SOIL" TO "SLAG1+SLAG2"
    TOL-SPEC "0.01"
    VARY STREAM-VAR STREAM=SOIL SUBSTREAM=MIXED  &
        VARIABLE=MASS-FLOW
    LIMITS "1" "1000"
```

```
DESIGN-SPEC SOILSOL
    DEFINE SLAG1 STREAM-VAR STREAM=SLAG SUBSTREAM=MIXED  &
        VARIABLE=MASS-FLOW
    DEFINE SLAG2 STREAM-VAR STREAM=SLAG SUBSTREAM=CISOLID  &
        VARIABLE=MASS-FLOW
    DEFINE SOIL STREAM-VAR STREAM=SOIL SUBSTREAM=CISOLID  &
        VARIABLE=MASS-FLOW
    SPEC "3.33333*SOIL" TO "SLAG1+SLAG2"
    TOL-SPEC "0.01"
    VARY STREAM-VAR STREAM=SOIL SUBSTREAM=CISOLID  &
        VARIABLE=MASS-FLOW
    LIMITS "1" "1000"

DESIGN-SPEC SCRUBH2O
    DEFINE MASSAL STREAM-VAR STREAM=SCRUBBOT SUBSTREAM=CISOLID  &
        VARIABLE=MASS-FLOW
    DEFINE SCRUB STREAM-VAR STREAM=SCRUBH2O SUBSTREAM=MIXED  &
        VARIABLE=MASS-FLOW
    DEFINE NAOH STREAM-VAR STREAM=NAOH SUBSTREAM=CISOLID  &
        VARIABLE=MASS-FLOW
    SPEC "SCRUB" TO "20*MASSAL"
    TOL-SPEC "0.01"
    VARY STREAM-VAR STREAM=SCRUBH2O SUBSTREAM=MIXED  &
        VARIABLE=MASS-FLOW
    LIMITS "NAOH" "5000"

CONV-OPTIONS
    SECANT MAX-STEP-SIZ=.05 BRACKET=YES

STREAM-REPOR NOSORT MOLEFLOW MASSFLOW PROPERTIES=SET1 ALL-SUBS
```

System A-3

```
TITLE 'ITTS PHASE I - ROTARY KILN W/ WET APC - SYSA3-4 (main)'

IN-UNITS ENG

DEF-STREAMS MIXCISLD ALL

DIAGNOSTICS
    TERMINAL SIM-LEVEL=8 CONV-LEVEL=8

SIM-OPTIONS MW-CALC=YES

RUN-CONTROL MAX-TIME=1800

DESCRIPTION "
        ACCEPTS COMBUSTIBLE AND NON-COMBUSTIBLE WASTE, AND METAL FOR MELTING.
        "

DATABANKS COMBUST  / INORGANIC  / PURECOMP  / SOLIDS  /  &
        NOASPENPCD

PROP-SOURCES COMBUST  / INORGANIC  / PURECOMP  / SOLIDS

COMPONENTS
    H2 H2 H2 /
    O2 O2 O2 /
    N2 N2 N2 /
    CL2 CL2 CL2 /
    F2 F2 F2 /
    NO NO NO /
    SO2 O2S SO2 /
    H2O H2O H2O /
    CO2 CO2 CO2 /
    CO CO CO /
    HCL HCL HCL /
    CH4 CH4 CH4 /
    C-S C C-S /
    S-S S S-S /
    S S S /
    NAOH-S NAOH NAOH-S /
    NACL-S NACL NACL-S /
    NAF-S NAF NAF-S /
    AS AS AS /
    CD CD CD /
    HG HG HG /
    SE SE SE /
    FE FE FE /
    SIO2 SIO2 SIO2 /
    AL2O3 AL2O3 AL2O3 /
    FE-S FE FE-S /
    SIO2-S SIO2 SIO2-S /
    AL2O3-S AL2O3 AL2O3-S /
    AS-S AS AS-S /
    BA-S BA BA-S /
    CD-S CD CD-S /
    CR-S CR CR-S /
    PB-S PB PB-S /
    SE-S SE SE-S /
    AG-S AG AG-S /
    CACO3-S CACO3 CACO3-S /
```

```
    MGO-S MGO MGO-S /
    NA2O-S NA2O NA2O-S /
    K2O-S K2O K2O-S /
    FE3O4 FE3O4 FE3O4 /
    FE3O4-S FE3O4 FE3O4-S /
    CAO-S CAO CAO-S

FLOWSHEET
    BLOCK KILN IN=FDWASTEN SOIL FUELMIX1 FDWASTEC AIR  &
        AIRLEAKS COOLH2O OUT=OUT1
    BLOCK KILNSEP IN=KILNOUT OUT=ASH KILNVAP
    BLOCK SCC IN=KILNVAP FUELMIX2 OUT=OUT2
    BLOCK SOLIDSEP IN=SCRUBOUT OUT=HGPLUS FLYASH VAP-LIQ
    BLOCK L-V-SEP IN=VAP-LIQ OUT=SCRUBVAP SCRUBBOT
    BLOCK DUPL1 IN=OUT1 OUT=KILNOUT DUM1IN
    BLOCK Q1 IN=DUM1IN OUT=DUM1OUT
    BLOCK DUPL2 IN=OUT2 OUT=SCCOUT DUM2IN
    BLOCK Q2 IN=DUM2IN OUT=DUM2OUT
    BLOCK VITRIFY IN=ASH OUT=VITOUT
    BLOCK L-V-SEP2 IN=VITOUT OUT=VITVAP SLAG
    BLOCK SCRUB IN=NAOH SCRUBH2O SCCOUT OUT=SCRUBOUT
    BLOCK MELTER IN=FDMETMLT OUT=METAL

PROPERTIES SOLIDS
    PROPERTIES IDEAL / RKS-BM

PROP-SET ALL-SUBS TEMP PRES VFRAC UNITS='ATM' SUBSTREAM=ALL

PROP-SET SET1 VLSTDMX UNITS='CUFT/HR' SUBSTREAM=MIXED

STREAM AIR
    SUBSTREAM MIXED TEMP=68 PRES=1 <ATM> MASS-FLOW=5000
    MASS-FRAC O2 0.233 / N2 0.767

STREAM AIRLEAKS
    SUBSTREAM MIXED TEMP=68 PRES=1 <ATM>  &
        VOLUME-FLOW=600 <CUFT/MIN>
    MASS-FRAC O2 0.233 / N2 0.767

STREAM COOLH2O
    SUBSTREAM MIXED TEMP=68 PRES=1 <ATM> MASS-FLOW=1
    MASS-FRAC H2O 1

STREAM FDMETMLT
    SUBSTREAM MIXED TEMP=68 PRES=1 <ATM> MASS-FLOW=1.20
    MASS-FLOW H2 2.42
    SUBSTREAM CISOLID TEMP=68 PRES=1 <ATM> MASS-FLOW=147.80
    MASS-FLOW C-S 14.44 / FE-S 282.02 / SIO2-S 0.035 /  &
        AL2O3-S 0.035 / BA-S 0.87 / CD-S 0.18

STREAM FDWASTEC
    SUBSTREAM MIXED TEMP=68 PRES=1 <ATM>
    MASS-FLOW H2 50.95 / O2 92.76 / N2 0.23 / CL2 53.02 /  &
        F2 0.11 / H2O 19.83
    SUBSTREAM CISOLID TEMP=68 PRES=1 <ATM>
    MASS-FLOW C-S 326.28 / S-S 0.49 / FE-S 7.67 / SIO2-S  &
        53.01 / AL2O3-S 53.01 / BA-S 0.77 / CD-S 0.77 /  &
        CR-S 1.53

STREAM FDWASTEN
    SUBSTREAM MIXED TEMP=68 PRES=1 <ATM>
    MASS-FLOW H2 0.54 / O2 1.44 / N2 0.01 / CL2 14.88 /  &
```

```
        NO 0.66 / SO2 0.83 / H2O 354.23 / HG 0.15
    SUBSTREAM CISOLID TEMP=68 PRES=1 <ATM>
    MASS-FLOW C-S 4.77 / S-S 0.62 / SIO2-S 476.77 /  &
        AL2O3-S 476.77 / AS-S 0.06 / BA-S 0.04 / CD-S 2.63  &
        / CR-S 4.95 / PB-S 0.17 / SE-S 0.03 / AG-S 0.03

STREAM FUELMIX1
    SUBSTREAM MIXED TEMP=68 PRES=1 <ATM> MASS-FLOW=1
    MASS-FRAC O2 0.222 / N2 0.732 / CH4 0.046

STREAM FUELMIX2
    SUBSTREAM MIXED TEMP=68 PRES=1 <ATM> MASS-FLOW=1
    MASS-FRAC O2 0.222 / N2 0.732 / CH4 0.046

STREAM NAOH
    SUBSTREAM MIXED TEMP=68 PRES=1 <ATM>
    SUBSTREAM CISOLID TEMP=68 PRES=1 <ATM> MASS-FLOW=80
    MASS-FRAC NAOH-S 1

STREAM OUT1
    SUBSTREAM MIXED TEMP=2500 PRES=1 <ATM>
    MASS-FLOW O2 1293 / N2 14610 / NO 27 / SO2 3 / H2O  &
        1977 / CO2 2598 / HCL 70 / FE3O4 45
    SUBSTREAM CISOLID TEMP=2500 PRES=1 <ATM>
    MASS-FLOW SIO2-S 1069 / AL2O3-S 739 / CR-S 8 / MGO-S  &
        18 / NA2O-S 10 / K2O-S 19 / CAO-S 56

STREAM SCRUBH2O
    SUBSTREAM MIXED TEMP=68 PRES=1 <ATM> MASS-FLOW=1
    MASS-FRAC H2O 1

STREAM SCRUBOUT
    SUBSTREAM MIXED TEMP=120 PRES=1 <ATM>
    MASS-FLOW O2 1452 / N2 17490 / H2O 373000 / CO2 3088
    SUBSTREAM CISOLID TEMP=120 PRES=1 <ATM>
    MASS-FLOW NACL-S 112

STREAM SOIL
    SUBSTREAM MIXED TEMP=68 PRES=1 <ATM> MASS-FLOW=62.5
    MASS-FLOW H2O 0.1
    SUBSTREAM CISOLID TEMP=68 PRES=1 <ATM> MASS-FLOW=562.5
    MASS-FLOW SIO2-S 0.569 / AL2O3-S 0.102 / CACO3-S 0.128 /  &
        MGO-S 0.023 / NA2O-S 0.013 / K2O-S 0.024 / FE3O4-S 0.041

BLOCK KILNSEP SEP
    FRAC STREAM=ASH SUBSTREAM=MIXED COMPS=H2 O2 N2 CL2 F2  &
        NO SO2 H2O CO2 CO HCL CH4 C-S S-S S NAOH-S NACL-S  &
        NAF-S AS CD HG SE FE SIO2 AL2O3 FE-S SIO2-S AL2O3-S  &
        AS-S BA-S CD-S CR-S PB-S SE-S AG-S CACO3-S MGO-S  &
        NA2O-S K2O-S FE3O4 FE3O4-S CAO-S FRACS=0 0 0 0 0 0  &
        0 0 0 0 0 0 .8 .8 0 .8 .8 .8 0 0 0 0 .8 .8  &
        .8 .8 .8 .8 .8 .8 .8 .8 .8 .8 .8 .8 .8 .8 .8  &
        .8 .8 .8
    FRAC STREAM=ASH SUBSTREAM=CISOLID COMPS=C-S S-S NAOH-S  &
        NACL-S NAF-S FE-S SIO2-S AL2O3-S AS-S BA-S CD-S CR-S  &
        PB-S SE-S AG-S CACO3-S MGO-S NA2O-S K2O-S FE3O4-S  &
        CAO-S FRACS=.8 .8 .8 .8 .8 .8 .8 .8 .8 .8 .8 .8  &
        .8 .8 .8 .8 .8 .8 .8 .8 .8
    FLASH-SPECS ASH TEMP=68 PRES=1 <ATM>

BLOCK SOLIDSEP SEP
    FRAC STREAM=HGPLUS SUBSTREAM=MIXED COMPS=H2 O2 N2 CL2  &
```

```
        F2 NO SO2 H2O CO2 CO HCL CH4 C-S S-S S NAOH-S  &
        NACL-S NAF-S AS CD HG SE FE SIO2 AL2O3 FE-S SIO2-S  &
        AL2O3-S AS-S BA-S CD-S CR-S PB-S SE-S AG-S CACO3-S  &
        MGO-S NA2O-S K2O-S FE3O4 FE3O4-S CAO-S FRACS=0 0 0  &
        0 0 0 0 0 0 0 0 0 0 0 0 0 0 0 1 1 1 1 0 0  &
        0 0 0 0 1 0 1 0 0 1 0 0 0 0 0 0 0 0
    FRAC STREAM=HGPLUS SUBSTREAM=CISOLID COMPS=C-S S-S NAOH-S  &
        NACL-S NAF-S FE-S SIO2-S AL2O3-S AS-S BA-S CD-S CR-S  &
        PB-S SE-S AG-S CACO3-S MGO-S NA2O-S K2O-S FE3O4-S  &
        CAO-S FRACS=0 0 0 0 0 0 0 0 1 0 1 0 0 1 0 0 0 0 0 0 0
    FRAC STREAM=FLYASH SUBSTREAM=MIXED COMPS=H2 O2 N2 CL2  &
        F2 NO SO2 H2O CO2 CO HCL CH4 C-S S-S S NAOH-S  &
        NACL-S NAF-S AS CD HG SE FE SIO2 AL2O3 FE-S SIO2-S  &
        AL2O3-S AS-S BA-S CD-S CR-S PB-S SE-S AG-S CACO3-S  &
        MGO-S NA2O-S K2O-S FE3O4 FE3O4-S CAO-S FRACS=0 0 0  &
        0 0 0 0 0 0 0 0 0 1 1 1 0 0 0 0 0 0 0 1 1  &
        1 1 1 1 0 1 0 1 1 0 1 1 1 1 1 1 1 1
    FRAC STREAM=FLYASH SUBSTREAM=CISOLID COMPS=C-S S-S NAOH-S  &
        NACL-S NAF-S FE-S SIO2-S AL2O3-S AS-S BA-S CD-S CR-S  &
        PB-S SE-S AG-S CACO3-S MGO-S NA2O-S K2O-S FE3O4-S  &
        CAO-S FRACS=1 1 0 0 0 1 1 1 0 1 0 1 1 0 1 1 1 1 1 1 1

BLOCK L-V-SEP FLASH2
    PARAM TEMP=120 PRES=1 <ATM>

BLOCK L-V-SEP2 FLASH2
    PARAM TEMP=3000 PRES=1 <ATM>

BLOCK KILN RGIBBS
    PARAM TEMP=1600 PRES=1 <ATM> NPHASE=2
    PROD H2 / O2 / N2 / CL2 / F2 / NO / SO2 / H2O /  &
        CO2 / CO / HCL / AS / CD / HG / SE / FE-S SS  &
        / SIO2-S SS / AL2O3-S SS / AS-S SS / BA-S SS /  &
        CD-S SS / CR-S SS / PB-S SS / SE-S SS / AG-S SS  &
        / MGO-S SS / NA2O-S SS / K2O-S SS / FE3O4-S SS /  &
        CAO-S SS
    PROD-FRAC FE-S 1 / FE3O4-S 1

BLOCK MELTER RGIBBS
    PARAM TEMP=3000 PRES=1 <ATM> NPHASE=2
    PROD H2 / C-S SS / FE / SIO2 / AL2O3 / FE-S SS /  &
        SIO2-S SS / AL2O3-S SS / BA-S SS / CD / CD-S SS

BLOCK Q1 RGIBBS
    PARAM TEMP=68 PRES=1 <ATM> NPHASE=2 TAPP=1532
    PROD H2 / O2 / N2 / CL2 / F2 / NO / SO2 / H2O /  &
        CO2 / CO / HCL / AS / CD / HG / SE / FE-S SS  &
        / SIO2-S SS / AL2O3-S SS / AS-S SS / BA-S SS /  &
        CD-S SS / CR-S SS / PB-S SS / SE-S SS / AG-S SS  &
        / MGO-S SS / NA2O-S SS / K2O-S SS / FE3O4-S SS /  &
        CAO-S SS
    PROD-FRAC FE-S 1 / FE3O4-S 1

BLOCK Q2 RGIBBS
    PARAM TEMP=68 PRES=1 <ATM> NPHASE=2 CHEMEQ=YES TAPP=2132
    PROD H2 / O2 / N2 / CL2 / F2 / NO / SO2 / H2O /  &
        CO2 / CO / HCL / CH4 / S / AS / CD / HG / SE  &
        / FE-S SS / SIO2-S SS / AL2O3-S SS / BA-S SS /  &
        CR-S SS / PB-S SS / AG-S SS / MGO-S SS / NA2O-S  &
        SS / K2O-S SS / FE3O4-S SS / CAO-S SS
    PROD-FRAC FE-S 1 / FE3O4-S 1
```

```
BLOCK SCC RGIBBS
    PARAM TEMP=2200 PRES=1 <ATM> NPHASE=2 MAXIT=100
    PROD H2 / O2 / N2 / CL2 / F2 / NO / SO2 / H2O /  &
        CO2 / CO / HCL / CH4 / S / AS / CD / HG / SE  &
        / FE-S SS / SIO2-S SS / AL2O3-S SS / BA-S SS /  &
        CR-S SS / PB-S SS / AG-S SS / MGO-S SS / NA2O-S  &
        SS / K2O-S SS / FE3O4-S SS / CAO-S SS
    PROD-FRAC FE-S 1 / FE3O4-S 1

BLOCK SCRUB RGIBBS
    PARAM TEMP=120 PRES=1 <ATM> NPHASE=2
    PROD H2 / O2 / N2 / CL2 / F2 / NO / SO2 / H2O /  &
        CO2 / CO / HCL / NAOH-S SS / NACL-S SS / NAF-S  &
        SS / AS / CD / HG / SE / FE-S SS / SIO2-S SS /  &
        AL2O3-S SS / AS-S SS / BA-S SS / CD-S SS / CR-S  &
        SS / PB-S SS / SE-S SS / AG-S SS / MGO-S SS /  &
        NA2O-S SS / K2O-S SS / FE3O4-S SS / CAO-S SS

BLOCK VITRIFY RGIBBS
    PARAM TEMP=3000 PRES=1 <ATM> NPHASE=2
    PROD H2 / O2 / N2 / CL2 / F2 / NO / SO2 / H2O /  &
        CO2 / CO / HCL / C-S / S / AS / CD / HG / SE  &
        / FE-S SS / SIO2 / AL2O3 / AS-S SS / BA-S SS /  &
        CD-S SS / CR-S SS / PB-S SS / SE-S SS / AG-S SS  &
        / MGO-S SS / NA2O-S SS / K2O-S SS / FE3O4-S SS /  &
        CAO-S SS
    PROD-FRAC FE-S 1 / FE3O4-S 1
    BLOCK-OPTION RESTART=NO

BLOCK DUPL1 DUPL

BLOCK DUPL2 DUPL

DESIGN-SPEC NAOH
    DEFINE CAUIN MASS-FLOW STREAM=NAOH SUBSTREAM=CISOLID  &
        COMPONENT=NAOH-S
    DEFINE CAUOUT MASS-FLOW STREAM=SCRUBOUT SUBSTREAM=CISOLID  &
        COMPONENT=NAOH-S
    SPEC "CAUIN-100.*CAUOUT" TO "0"
    TOL-SPEC "0.01"
    VARY STREAM-VAR STREAM=NAOH SUBSTREAM=CISOLID  &
        VARIABLE=MASS-FLOW
    LIMITS "70" "1000"

DESIGN-SPEC OXI
    DEFINE AIR MASS-FLOW STREAM=AIR SUBSTREAM=MIXED  &
        COMPONENT=O2
    DEFINE WC MASS-FLOW STREAM=FDWASTEC SUBSTREAM=MIXED  &
        COMPONENT=O2
    DEFINE WN MASS-FLOW STREAM=FDWASTEN SUBSTREAM=MIXED  &
        COMPONENT=O2
    DEFINE F1 MASS-FLOW STREAM=FUELMIX1 SUBSTREAM=MIXED  &
        COMPONENT=O2
    DEFINE OXOUT MASS-FLOW STREAM=KILNOUT SUBSTREAM=MIXED  &
        COMPONENT=O2
    DEFINE AL MASS-FLOW STREAM=AIRLEAKS SUBSTREAM=MIXED  &
        COMPONENT=O2
    SPEC "AL+AIR+WC+WN+(F1/6.0)" TO "2.0*OXOUT"
    TOL-SPEC "1  "
    VARY STREAM-VAR STREAM=AIR SUBSTREAM=MIXED  &
        VARIABLE=MASS-FLOW
    LIMITS "1" "10000"
```

```
DESIGN-SPEC QKILN
    DEFINE QKILN BLOCK-VAR BLOCK=KILN VARIABLE=QCALC  &
        SENTENCE=PARAM
    DEFINE Q1 BLOCK-VAR BLOCK=Q1 VARIABLE=QCALC SENTENCE=PARAM
    SPEC "QKILN" TO "0.05*Q1"
    TOL-SPEC "1. "
    VARY STREAM-VAR STREAM=COOLH2O SUBSTREAM=MIXED  &
        VARIABLE=MASS-FLOW
    LIMITS "1" "50000"

DESIGN-SPEC QSCC
    DEFINE QSCC BLOCK-VAR BLOCK=SCC VARIABLE=QCALC  &
        SENTENCE=PARAM
    DEFINE Q2 BLOCK-VAR BLOCK=Q2 VARIABLE=QCALC SENTENCE=PARAM
    SPEC "QSCC" TO "0.05*Q2"
    TOL-SPEC "1. "
    VARY STREAM-VAR STREAM=FUELMIX2 SUBSTREAM=MIXED  &
        VARIABLE=MASS-FLOW
    LIMITS "1" "100000"

DESIGN-SPEC SOILH2O
    DEFINE SLAG1 STREAM-VAR STREAM=SLAG SUBSTREAM=MIXED  &
        VARIABLE=MASS-FLOW
    DEFINE SLAG2 STREAM-VAR STREAM=SLAG SUBSTREAM=CISOLID  &
        VARIABLE=MASS-FLOW
    DEFINE SOIL STREAM-VAR STREAM=SOIL SUBSTREAM=MIXED  &
        VARIABLE=MASS-FLOW
    SPEC "30.*SOIL" TO "SLAG1+SLAG2"
    TOL-SPEC "0.01"
    VARY STREAM-VAR STREAM=SOIL SUBSTREAM=MIXED  &
        VARIABLE=MASS-FLOW
    LIMITS "1" "1000"

DESIGN-SPEC SOILSOL
    DEFINE SLAG1 STREAM-VAR STREAM=SLAG SUBSTREAM=MIXED  &
        VARIABLE=MASS-FLOW
    DEFINE SLAG2 STREAM-VAR STREAM=SLAG SUBSTREAM=CISOLID  &
        VARIABLE=MASS-FLOW
    DEFINE SOIL STREAM-VAR STREAM=SOIL SUBSTREAM=CISOLID  &
        VARIABLE=MASS-FLOW
    SPEC "3.33333*SOIL" TO "SLAG1+SLAG2"
    TOL-SPEC "0.01"
    VARY STREAM-VAR STREAM=SOIL SUBSTREAM=CISOLID  &
        VARIABLE=MASS-FLOW
    LIMITS "1" "1000"

DESIGN-SPEC SCRUBH2O
    DEFINE MASSAL STREAM-VAR STREAM=SCRUBBOT SUBSTREAM=CISOLID  &
        VARIABLE=MASS-FLOW
    DEFINE SCRUB STREAM-VAR STREAM=SCRUBH2O SUBSTREAM=MIXED  &
        VARIABLE=MASS-FLOW
    DEFINE NAOH STREAM-VAR STREAM=NAOH SUBSTREAM=CISOLID  &
        VARIABLE=MASS-FLOW
    SPEC "SCRUB" TO "20*MASSAL"
    TOL-SPEC "0.01"
    VARY STREAM-VAR STREAM=SCRUBH2O SUBSTREAM=MIXED  &
        VARIABLE=MASS-FLOW
    LIMITS "NAOH" "5000"
CONV-OPTIONS
    SECANT MAX-STEP-SIZ=.05 BRACKET=YES

STREAM-REPOR NOSORT MOLEFLOW MASSFLOW PROPERTIES=SET1 ALL-SUBS
```

System A-4

```
TITLE 'ITTS PHASE I - ROTARY KILN W/ CO2 RETENTION - MODEL A4-3 '

IN-UNITS ENG

DEF-STREAMS MIXCISLD ALL

DIAGNOSTICS
    TERMINAL SIM-LEVEL=8 CONV-LEVEL=8

RUN-CONTROL MAX-TIME=1800

DATABANKS COMBUST  / INORGANIC  / PURECOMP  / SOLIDS  /  &
        NOASPENPCD

PROP-SOURCES COMBUST  / INORGANIC  / PURECOMP  / SOLIDS

COMPONENTS
    H2 H2 H2 /
    O2 O2 O2 /
    N2 N2 N2 /
    CL2 CL2 CL2 /
    F2 F2 F2 /
    NO NO NO /
    SO2 O2S SO2 /
    H2O H2O H2O /
    CO2 CO2 CO2 /
    CO CO CO /
    HCL HCL HCL /
    CH4 CH4 CH4 /
    C-S C C-S /
    S-S S S-S /
    S S S /
    NAOH-S NAOH NAOH-S /
    NACL-S NACL NACL-S /
    NAF-S NAF NAF-S /
    AS AS AS /
    CD CD CD /
    HG HG HG /
    SE SE SE /
    FE FE FE /
    SIO2 SIO2 SIO2 /
    AL2O3 AL2O3 AL2O3 /
    FE-S FE FE-S /
    SIO2-S SIO2 SIO2-S /
    AL2O3-S AL2O3 AL2O3-S /
    AS-S AS AS-S /
    BA-S BA BA-S /
    CD-S CD CD-S /
    CR-S CR CR-S /
    PB-S PB PB-S /
    SE-S SE SE-S /
    AG-S AG AG-S /
    CACO3-S CACO3 CACO3-S /
    MGO-S MGO MGO-S /
    NA2O-S NA2O NA2O-S /
    K2O-S K2O K2O-S /
    FE3O4 FE3O4 FE3O4 /
    FE3O4-S FE3O4 FE3O4-S /
    CAO-S CAO CAO-S /
```

```
    CACL2-S CACL2 CACL2-S /
    CASO4-S CASO4 CASO4-S

FLOWSHEET
    BLOCK KILN IN=FDWASTEN SOIL FUELMIX1 FDWASTEC OXYGEN  &
        AIRLEAKS COOLH2O EX-RECYC OUT=OUT1
    BLOCK KILNSEP IN=KILNOUT OUT=ASH KILNVAP
    BLOCK SCC IN=KILNVAP FUELMIX2 OUT=OUT2
    BLOCK BAGHOUSE IN=QUENCHED OUT=HGPLUS FLYASH QNCHVAP
    BLOCK QUENCH IN=SCCOUT QNCH2O OUT=QUENCHED
    BLOCK DUPL1 IN=OUT1 OUT=KILNOUT DUM1IN
    BLOCK Q1 IN=DUM1IN OUT=DUM1OUT
    BLOCK DUPL2 IN=OUT2 OUT=SCCOUT DUM2IN
    BLOCK Q2 IN=DUM2IN OUT=DUM2OUT
    BLOCK VITRIFY IN=FLYASH ASH OUT=VITOUT
    BLOCK VIT-SEP IN=VITOUT OUT=VIT-VAP SLAG
    BLOCK SCRUBSEP IN=SCRUBOUT OUT=SCRUBVAP SCRUBBOT
    BLOCK ABSSEP IN=ABSORBED OUT=ABSGAS ABSSOL
    BLOCK CO2-DES IN=ABSSOL OUT=CO2-DES
    BLOCK FLASH IN=ABSGAS OUT=EXHAUST H2OOUT
    BLOCK CO2-SEP IN=CO2-DES OUT=CO2 CAO-OUT
    BLOCK SPLIT IN=CAO-OUT OUT=RECYCLE CAOSCRUB SPENTCAO
    BLOCK CAOMIXER IN=RECYCLE CAO-IN OUT=CAOMIXED
    BLOCK DRYSCRUB IN=CAOSCRUB QNCHVAP OUT=SCRUBOUT
    BLOCK GASQUENC IN=QNCH2O-2 CO2 OUT=CO2OUT
    BLOCK CO2-ABS IN=SCRUBVAP CAOMIXED OUT=ABSORBED
    BLOCK EX-SPLIT IN=EXHAUST OUT=OFFGAS EX-RECYC
    BLOCK MELTER IN=FDMETMLT OUT=METAL

PROPERTIES SOLIDS
    PROPERTIES IDEAL / RKS-BM

PROP-SET ALL-SUBS TEMP PRES VFRAC UNITS='ATM' SUBSTREAM=ALL

PROP-SET SET1 VLSTDMX UNITS='CUFT/HR' SUBSTREAM=MIXED

STREAM AIRLEAKS
    SUBSTREAM MIXED TEMP=68 PRES=1 <ATM>  &
        VOLUME-FLOW=600 <CUFT/MIN>
    MASS-FRAC O2 0.233 / N2 0.767

STREAM CAO-IN
    SUBSTREAM CISOLID TEMP=68 PRES=1 <ATM> MASS-FLOW=373.0501
    MASS-FRAC CAO-S 1

STREAM COOLH2O
    SUBSTREAM MIXED TEMP=68 PRES=1 <ATM> MASS-FLOW=1
    MASS-FRAC H2O 1

STREAM FDMETMLT
    SUBSTREAM MIXED TEMP=68 PRES=1 <ATM> MASS-FLOW=1.20
    MASS-FLOW H2 2.42
    SUBSTREAM CISOLID TEMP=68 PRES=1 <ATM> MASS-FLOW=147.80
    MASS-FLOW C-S 14.44 / FE-S 282.02 / SIO2-S 0.035 /  &
        AL2O3-S 0.035 / BA-S 0.87 / CD-S 0.18

STREAM FDWASTEC
    SUBSTREAM MIXED TEMP=68 PRES=1 <ATM>
    MASS-FLOW H2 50.95 / O2 92.76 / N2 0.23 / CL2 53.02 /  &
        F2 0.11 / H2O 19.83
    SUBSTREAM CISOLID TEMP=68 PRES=1 <ATM>
    MASS-FLOW C-S 326.28 / S-S 0.49 / FE-S 7.67 / SIO2-S  &
```

```
        53.01 / AL2O3-S 53.01 / BA-S 0.77 / CD-S 0.77 /  &
        CR-S 1.53

STREAM FDWASTEN
    SUBSTREAM MIXED TEMP=68 PRES=1 <ATM>
    MASS-FLOW H2 0.54 / O2 1.44 / N2 0.01 / CL2 14.88 /  &
        NO 0.66 / SO2 0.83 / H2O 354.23 / HG 0.15
    SUBSTREAM CISOLID TEMP=68 PRES=1 <ATM>
    MASS-FLOW C-S 4.77 / S-S 0.62 / SIO2-S 476.77 /  &
        AL2O3-S 476.77 / AS-S 0.06 / BA-S 0.04 / CD-S 2.63  &
        / CR-S 4.95 / PB-S 0.17 / SE-S 0.03 / AG-S 0.03

STREAM FUELMIX1
    SUBSTREAM MIXED TEMP=68 PRES=1 <ATM> MASS-FLOW=1481.360
    MASS-FLOW O2 0.222 / CH4 0.046

STREAM FUELMIX2
    SUBSTREAM MIXED TEMP=68 PRES=1 <ATM> MASS-FLOW=2043.100
    MASS-FLOW O2 0.222 / CH4 0.046

STREAM OUT1
    SUBSTREAM MIXED TEMP=2500 PRES=1 <ATM>
    MASS-FLOW O2 1293 / N2 14610 / NO 27 / SO2 3 / H2O  &
        1977 / CO2 2598 / HCL 70 / FE3O4 45
    SUBSTREAM CISOLID TEMP=2500 PRES=1 <ATM>
    MASS-FLOW SIO2-S 1069 / AL2O3-S 739 / CR-S 8 / MGO-S  &
        18 / NA2O-S 10 / K2O-S 19 / CAO-S 56

STREAM OXYGEN
    SUBSTREAM MIXED TEMP=68 PRES=1 <ATM> MASS-FLOW=206.4140
    MASS-FRAC O2 1

STREAM QNCH2O
    SUBSTREAM MIXED TEMP=68 PRES=1 <ATM> MASS-FLOW=13281.81
    MASS-FRAC H2O 1

STREAM QNCH2O-2
    SUBSTREAM MIXED TEMP=68 PRES=1 <ATM> MASS-FLOW=915.7221
    MASS-FRAC H2O 1

STREAM QUENCHED
    SUBSTREAM MIXED TEMP=350 PRES=1 <ATM>
    MASS-FLOW O2 1446 / N2 17490 / CL2 29 / H2O 16320 /  &
        CO2 3088 / HCL 40
    SUBSTREAM CISOLID TEMP=350 PRES=1 <ATM>
    MASS-FLOW SIO2-S 221 / AL2O3-S 148 / CD-S 3.3 / CR-S  &
        1.62 / MGO-S 3.6 / NA2O-S 2 / K2O-S 3.75 /  &
        FE3O4-S 9

STREAM SOIL
    SUBSTREAM MIXED TEMP=68 PRES=1 <ATM> MASS-FLOW=49.84335
    MASS-FLOW H2O 0.1
    SUBSTREAM CISOLID TEMP=68 PRES=1 <ATM> MASS-FLOW=448.59
    MASS-FLOW SIO2-S 0.569 / AL2O3-S 0.102 / CACO3-S 0.128 /  &
        MGO-S 0.023 / NA2O-S 0.013 / K2O-S 0.024 / FE3O4-S 0.041

BLOCK CAOMIXER MIXER
    PARAM PRES=1 <ATM> NPHASE=3

BLOCK EX-SPLIT FSPLIT
    FRAC EX-RECYC 0.90
```

```
BLOCK SPLIT FSPLIT
    FRAC RECYCLE 0.9 / CAOSCRUB 0.0154191

BLOCK ABSSEP SEP
    FRAC STREAM=ABSSOL SUBSTREAM=MIXED COMPS=H2 O2 N2 CL2  &
        F2 NO SO2 H2O CO2 CO HCL CH4 C-S S-S S NAOH-S  &
        NACL-S NAF-S AS CD HG SE FE SIO2 AL2O3 FE-S SIO2-S  &
        AL2O3-S AS-S BA-S CD-S CR-S PB-S SE-S AG-S CACO3-S  &
        MGO-S NA2O-S K2O-S FE3O4 FE3O4-S CAO-S CACL2-S CASO4-S  &
        FRACS=0 0 0 0 0 0 0 0 0 0 0 0 0 1 1 1 1 1 1 1  &
        1 1 1 1 1 1 1 1 1 1 1 1 1 1 1 1 1 1 1 1 1 1 1  &
        1 1 1 1 1
    FRAC STREAM=ABSSOL SUBSTREAM=CISOLID COMPS=C-S S-S NAOH-S  &
        NACL-S NAF-S FE-S SIO2-S AL2O3-S AS-S BA-S CD-S CR-S  &
        PB-S SE-S AG-S CACO3-S MGO-S NA2O-S K2O-S FE3O4-S  &
        CAO-S CACL2-S CASO4-S FRACS=1 1 1 1 1 1 1 1 1 1 1  &
        1 1 1 1 1 1 1 1 1 1 1 1 1 1

BLOCK BAGHOUSE SEP
    FRAC STREAM=HGPLUS SUBSTREAM=MIXED COMPS=H2 O2 N2 CL2  &
        F2 NO SO2 H2O CO2 CO HCL CH4 C-S S-S S NAOH-S  &
        NACL-S NAF-S AS CD HG SE FE SIO2 AL2O3 FE-S SIO2-S  &
        AL2O3-S AS-S BA-S CD-S CR-S PB-S SE-S AG-S CACO3-S  &
        MGO-S NA2O-S K2O-S FE3O4 FE3O4-S CAO-S FRACS=0 0 0  &
        0 0 0 0 0 0 0 0 0 0 0 0 0 0 0 1 1 1 1 0 0  &
        0 0 0 0 1 0 1 0 0 1 0 0 0 0 0 0 0 0
    FRAC STREAM=HGPLUS SUBSTREAM=CISOLID COMPS=C-S S-S NAOH-S  &
        NACL-S NAF-S FE-S SIO2-S AL2O3-S AS-S BA-S CD-S CR-S  &
        PB-S SE-S AG-S CACO3-S MGO-S NA2O-S K2O-S FE3O4-S  &
        CAO-S FRACS=0 0 0 0 0 0 0 0 1 0 1 0 0 1 0 0 0 0 0 0 0
    FRAC STREAM=FLYASH SUBSTREAM=MIXED COMPS=H2 O2 N2 CL2  &
        F2 NO SO2 H2O CO2 CO HCL CH4 C-S S-S S NAOH-S  &
        NACL-S NAF-S AS CD HG SE FE SIO2 AL2O3 FE-S SIO2-S  &
        AL2O3-S AS-S BA-S CD-S CR-S PB-S SE-S AG-S CACO3-S  &
        MGO-S NA2O-S K2O-S FE3O4 FE3O4-S CAO-S FRACS=0 0 0  &
        0 0 0 0 0 0 0 0 0 1 1 1 1 1 1 0 0 0 0 1 1  &
        1 1 1 1 0 1 0 1 1 0 1 1 1 1 1 1 1 1
    FRAC STREAM=FLYASH SUBSTREAM=CISOLID COMPS=C-S S-S NAOH-S  &
        NACL-S NAF-S FE-S SIO2-S AL2O3-S AS-S BA-S CD-S CR-S  &
        PB-S SE-S AG-S CACO3-S MGO-S NA2O-S K2O-S FE3O4-S  &
        CAO-S FRACS=1 1 1 1 1 1 1 1 0 1 0 1 1 0 1 1  &
        1 1 1 1 1
    FLASH-SPECS FLYASH TEMP=68 PRES=1 <ATM>

BLOCK CO2-SEP SEP
    FRAC STREAM=CO2 SUBSTREAM=MIXED COMPS=H2 O2 N2 CL2 F2  &
        NO SO2 H2O CO2 CO HCL CH4 C-S S-S S NAOH-S NACL-S  &
        NAF-S AS CD HG SE FE SIO2 AL2O3 FE-S SIO2-S AL2O3-S  &
        AS-S BA-S CD-S CR-S PB-S SE-S AG-S CACO3-S MGO-S  &
        NA2O-S K2O-S FE3O4 FE3O4-S CAO-S CACL2-S CASO4-S  &
        FRACS=0 0 0 0 0 0 0 0 1 0 0 0 0 0 0 0 0 0  &
        0 0 0 0 0 0 0 0 0 0 0 0 0 0 0 0 0 0 0 0 0 0 0 0 0 0
    FRAC STREAM=CO2 SUBSTREAM=CISOLID COMPS=C-S S-S NAOH-S  &
        NACL-S NAF-S FE-S SIO2-S AL2O3-S AS-S BA-S CD-S CR-S  &
        PB-S SE-S AG-S CACO3-S MGO-S NA2O-S K2O-S FE3O4-S  &
        CAO-S CACL2-S CASO4-S FRACS=0 0 0 0 0 0 0 0 0 0  &
        0 0 0 0 0 0 0 0 0 0 0 0 0
    FLASH-SPECS CAO-OUT TEMP=68 PRES=1 <ATM>

BLOCK KILNSEP SEP
    FRAC STREAM=ASH SUBSTREAM=MIXED COMPS=H2 O2 N2 CL2 F2  &
        NO SO2 H2O CO2 CO HCL CH4 C-S S-S S NAOH-S NACL-S  &
```

```
        NAF-S AS CD HG SE FE SIO2 AL2O3 FE-S SIO2-S AL2O3-S  &
        AS-S BA-S CD-S CR-S PB-S SE-S AG-S CACO3-S MGO-S  &
        NA2O-S K2O-S FE3O4 FE3O4-S CAO-S FRACS=0 0 0 0 0 0  &
        0 0 0 0 0 0 .8 .8 0 .8 .8 .8 0 0 0 0 .8 .8  &
        .8 .8 .8 .8 .8 .8 .8 .8 .8 .8 .8 .8 .8 .8 .8 .8 .8 .8
    FRAC STREAM=ASH SUBSTREAM=CISOLID COMPS=C-S S-S NAOH-S  &
        NACL-S NAF-S FE-S SIO2-S AL2O3-S AS-S BA-S CD-S CR-S  &
        PB-S SE-S AG-S CACO3-S MGO-S NA2O-S K2O-S FE3O4-S  &
        CAO-S FRACS=.8 .8 .8 .8 .8 .8 .8 .8 .8 .8 .8 .8  &
        .8 .8 .8 .8 .8 .8 .8 .8 .8
    FLASH-SPECS ASH TEMP=68 PRES=1 <ATM>

BLOCK SCRUBSEP SEP
    FRAC STREAM=SCRUBBOT SUBSTREAM=MIXED COMPS=H2 O2 N2 CL2  &
        F2 NO SO2 H2O CO2 CO HCL CH4 C-S S-S S NAOH-S  &
        NACL-S NAF-S AS CD HG SE FE SIO2 AL2O3 FE-S SIO2-S  &
        AL2O3-S AS-S BA-S CD-S CR-S PB-S SE-S AG-S CACO3-S  &
        MGO-S NA2O-S K2O-S FE3O4 FE3O4-S CAO-S CACL2-S CASO4-S  &
        FRACS=0 0 0 0 0 0 0 0 0 0 0 0 1 1 0 1 1 1  &
        1 1 1 1 1 1 1 1 1 1 1 1 1 1 1 1 1 1 1 1 1 1 1 1 1 1 1
    FRAC STREAM=SCRUBBOT SUBSTREAM=CISOLID COMPS=C-S S-S  &
        NAOH-S NACL-S NAF-S FE-S SIO2-S AL2O3-S AS-S BA-S  &
        CD-S CR-S PB-S SE-S AG-S CACO3-S MGO-S NA2O-S K2O-S  &
        FE3O4-S CAO-S CACL2-S CASO4-S FRACS=1 1 1 1 1 1 1  &
        1 1 1 1 1 1 1 1 1 1 1 1 1 1 1 1

BLOCK VIT-SEP SEP
    FRAC STREAM=VIT-VAP SUBSTREAM=MIXED COMPS=H2 O2 N2 CL2  &
        F2 NO SO2 H2O CO2 CO HCL CH4 C-S S-S S NAOH-S  &
        NACL-S NAF-S AS CD HG SE FE SIO2 AL2O3 FE-S SIO2-S  &
        AL2O3-S AS-S BA-S CD-S CR-S PB-S SE-S AG-S CACO3-S  &
        MGO-S NA2O-S K2O-S FE3O4 FE3O4-S CAO-S FRACS=1 1 1  &
        1 1 1 1 1 1 1 1 1 0 0 0 0 0 0 0 0 0 0 0 0 0  &
        0 0 0 0 0 0 0 0 0 0 0 0 0 0 0 0 0 0
    FRAC STREAM=VIT-VAP SUBSTREAM=CISOLID COMPS=C-S S-S  &
        NAOH-S NACL-S NAF-S FE-S SIO2-S AL2O3-S AS-S BA-S  &
        CD-S CR-S PB-S SE-S AG-S CACO3-S MGO-S NA2O-S K2O-S  &
        FE3O4-S CAO-S CACL2-S CASO4-S FRACS=0 0 0 0 0 0 0  &
        0 0 0 0 0 0 0 0 0 0 0 0 0 0 0 0 0 0

BLOCK FLASH FLASH2
    PARAM TEMP=90 PRES=1 <ATM> TOL=0.000001
    PROPERTIES IDEAL

BLOCK CO2-ABS RSTOIC
    PARAM TEMP=1200 PRES=1 <ATM> TOL=0.000001
    STOIC 1 MIXED CO2 -1 / CISOLID CAO-S -1 / CACO3-S 1
    CONV 1 MIXED CO2 1

BLOCK CO2-DES RGIBBS
    PARAM TEMP=1700 PRES=1 <ATM> NPHASE=2
    PROD CO2 / CAO-S SS
    PROPERTIES IDEAL

BLOCK DRYSCRUB RGIBBS
    PARAM TEMP=350 PRES=1 <ATM> NPHASE=2 MAXIT=500 TOL=0.0001
    PROD H2 / O2 / N2 / F2 / NO / H2O / CO2 / CO /  &
        HCL / CH4 / CAO-S SS / CACL2-S SS / CASO4-S SS

BLOCK GASQUENC RGIBBS
    PARAM TEMP=350 PRES=1 <ATM> NPHASE=2
    PROD H2 / O2 / H2O / CO2 / CO / C-S SS
```

```
BLOCK KILN RGIBBS
    DESCRIPTION "change tolerance to converge initially"
    PARAM TEMP=1600 PRES=1 <ATM> NPHASE=2 MAXIT=100  &
        TOL=0.000001
    PROD H2 / O2 / N2 / CL2 / F2 / SO2 / H2O / CO2 /  &
        CO / HCL / AS / CD / HG / SE / FE-S SS /  &
        SIO2-S SS / AL2O3-S SS / AS-S SS / BA-S SS /  &
        CD-S SS / CR-S SS / PB-S SS / SE-S SS / AG-S SS  &
        / MGO-S SS / NA2O-S SS / K2O-S SS / FE3O4-S SS /  &
        CAO-S SS
    PROD-FRAC FE-S 1 / FE3O4-S 1

BLOCK MELTER RGIBBS
    PARAM TEMP=3000 PRES=1 <ATM> NPHASE=2 MAXIT=500
    PROD H2 / C-S SS / FE / SIO2 / AL2O3 / FE-S SS /  &
        SIO2-S SS / AL2O3-S SS / BA-S SS / CD / CD-S SS

BLOCK Q1 RGIBBS
    PARAM TEMP=68 PRES=1 <ATM> NPHASE=2 TAPP=1532 TOL=0.000001
    PROD H2 / O2 / N2 / CL2 / F2 / NO / SO2 / H2O /  &
        CO2 / CO / HCL / AS / CD / HG / SE / FE-S SS  &
        / SIO2-S SS / AL2O3-S SS / AS-S SS / BA-S SS /  &
        CD-S SS / CR-S SS / PB-S SS / SE-S SS / AG-S SS  &
        / MGO-S SS / NA2O-S SS / K2O-S SS / FE3O4-S SS /  &
        CAO-S SS
    PROD-FRAC FE-S 1 / FE3O4-S 1

BLOCK Q2 RGIBBS
    PARAM TEMP=68 PRES=1 <ATM> NPHASE=2 TAPP=2132 TOL=0.000001
    PROD H2 / O2 / N2 / CL2 / F2 / NO / SO2 / H2O /  &
        CO2 / CO / HCL / CH4 / S / AS / CD / HG / SE  &
        / FE-S SS / SIO2-S SS / AL2O3-S SS / BA-S SS /  &
        CR-S SS / PB-S SS / AG-S SS / MGO-S SS / NA2O-S  &
        SS / K2O-S SS / FE3O4-S SS / CAO-S SS
    PROD-FRAC FE-S 1 / FE3O4-S 1

BLOCK QUENCH RGIBBS
    PARAM TEMP=350 PRES=1 <ATM> NPHASE=2 MAXIT=500 TOL=0.0001
    PROD H2 / O2 / N2 / F2 / NO / SO2 / H2O / CO2 /  &
        CO / HCL / AS / CD / HG / SE / FE-S SS /  &
        SIO2-S SS / AL2O3-S SS / AS-S SS / BA-S SS /  &
        CD-S SS / CR-S SS / PB-S SS / SE-S SS / AG-S SS  &
        / MGO-S SS / NA2O-S SS / K2O-S SS / FE3O4-S SS /  &
        CAO-S SS
    PROD-FRAC FE-S 1 / FE3O4-S 1

BLOCK SCC RGIBBS
    PARAM TEMP=2200 PRES=1 <ATM> NPHASE=2 TOL=0.000001
    PROD H2 / O2 / N2 / CL2 / F2 / NO / SO2 / H2O /  &
        CO2 / CO / HCL / S / AS / CD / HG / SE /  &
        FE-S SS / SIO2-S SS / AL2O3-S SS / BA-S SS /  &
        CR-S SS / PB-S SS / AG-S SS / MGO-S SS / NA2O-S  &
        SS / K2O-S SS / FE3O4-S SS / CAO-S SS
    PROD-FRAC FE-S 1 / FE3O4-S 1
    BLOCK-OPTION RESTART=NO

BLOCK VITRIFY RGIBBS
    PARAM TEMP=3000 PRES=1 <ATM> NPHASE=2 TOL=0.000001
    PROD H2 / O2 / N2 / CL2 / F2 / NO / SO2 / H2O /  &
        CO2 / CO / HCL / C-S SS / S / AS / CD / HG /  &
        SE / FE-S SS / SIO2 / AL2O3 / AS-S SS / BA-S SS  &
        / CD-S SS / CR-S SS / PB-S SS / SE-S SS / AG-S  &
```

```
        SS / MGO-S SS / NA2O-S SS / K2O-S SS / FE3O4-S  &
        SS / CAO-S SS
    PROD-FRAC FE-S 1 / FE3O4-S 1
    BLOCK-OPTION RESTART=NO

BLOCK DUPL1 DUPL

BLOCK DUPL2 DUPL

DESIGN-SPEC CAO
    DEFINE CO2CON MOLE-FLOW STREAM=SCRUBVAP SUBSTREAM=MIXED  &
        COMPONENT=CO2
    DEFINE CAOMXD MOLE-FLOW STREAM=CAOMIXED SUBSTREAM=CISOLID  &
        COMPONENT=CAO-S
    SPEC "CO2CON" TO "CAOMXD"
    TOL-SPEC "0.1"
    VARY STREAM-VAR STREAM=CAO-IN SUBSTREAM=CISOLID  &
        VARIABLE=MASS-FLOW
    LIMITS "1" "10000"

DESIGN-SPEC OXYGEN
    DEFINE OXIN MASS-FLOW STREAM=OXYGEN SUBSTREAM=MIXED  &
        COMPONENT=O2
    DEFINE WC MASS-FLOW STREAM=FDWASTEC SUBSTREAM=MIXED  &
        COMPONENT=O2
    DEFINE WN MASS-FLOW STREAM=FDWASTEN SUBSTREAM=MIXED  &
        COMPONENT=O2
    DEFINE F1 MASS-FLOW STREAM=FUELMIX1 SUBSTREAM=MIXED  &
        COMPONENT=O2
    DEFINE AL MASS-FLOW STREAM=AIRLEAKS SUBSTREAM=MIXED  &
        COMPONENT=O2
    DEFINE EX MASS-FLOW STREAM=EX-RECYC SUBSTREAM=MIXED  &
        COMPONENT=O2
    DEFINE OXOUT MASS-FLOW STREAM=KILNOUT SUBSTREAM=MIXED  &
        COMPONENT=O2
    SPEC "AL+OXIN+WC+WN+(F1/6.0)+EX" TO "OXOUT*2.0"
    TOL-SPEC "0.1"
    VARY STREAM-VAR STREAM=OXYGEN SUBSTREAM=MIXED  &
        VARIABLE=MASS-FLOW
    LIMITS "1  " "100000"

DESIGN-SPEC QKILN1
    DEFINE QKILN BLOCK-VAR BLOCK=KILN VARIABLE=QCALC  &
        SENTENCE=PARAM
    DEFINE Q1 BLOCK-VAR BLOCK=Q1 VARIABLE=QCALC SENTENCE=PARAM
    SPEC "QKILN" TO "0.05*Q1"
    TOL-SPEC "1."
    VARY STREAM-VAR STREAM=FUELMIX1 SUBSTREAM=MIXED  &
        VARIABLE=MASS-FLOW
    LIMITS "1" "50000"

DESIGN-SPEC QQUENCH
    DEFINE QQNCH BLOCK-VAR BLOCK=QUENCH VARIABLE=QCALC  &
        SENTENCE=PARAM
    SPEC "QQNCH" TO "0"
    TOL-SPEC "1  "
    VARY STREAM-VAR STREAM=QNCH2O SUBSTREAM=MIXED  &
        VARIABLE=MASS-FLOW
    LIMITS "1" "100000"

DESIGN-SPEC QQUENCH2
    DEFINE QGASQU BLOCK-VAR BLOCK=GASQUENC VARIABLE=QCALC  &
```

```
        SENTENCE=PARAM
    SPEC "QGASQU" TO "0"
    TOL-SPEC "1."
    VARY STREAM-VAR STREAM=QNCH2O-2 SUBSTREAM=MIXED  &
        VARIABLE=MASS-FLOW
    LIMITS "1" "5000"

DESIGN-SPEC QSCC
    DEFINE QSCC BLOCK-VAR BLOCK=SCC VARIABLE=QCALC  &
        SENTENCE=PARAM
    DEFINE Q2 BLOCK-VAR BLOCK=Q2 VARIABLE=QCALC SENTENCE=PARAM
    SPEC "QSCC " TO "0.05*Q2"
    TOL-SPEC "1"
    VARY STREAM-VAR STREAM=FUELMIX2 SUBSTREAM=MIXED  &
        VARIABLE=MASS-FLOW
    LIMITS "1" "100000"

DESIGN-SPEC SCRUB
    DEFINE CAOIN MOLE-FLOW STREAM=CAOSCRUB SUBSTREAM=CISOLID  &
        COMPONENT=CAO-S
    DEFINE SO2IN MOLE-FLOW STREAM=QNCHVAP SUBSTREAM=MIXED  &
        COMPONENT=SO2
    DEFINE HCLIN MOLE-FLOW STREAM=QNCHVAP SUBSTREAM=MIXED  &
        COMPONENT=HCL
    DEFINE LIME MASS-FLOW STREAM=SCRUBOUT SUBSTREAM=CISOLID  &
        COMPONENT=CAO-S
    SPEC "CAOIN-SO2IN-HCLIN/2" TO "0.01                      "
    TOL-SPEC "0.01"
    VARY BLOCK-VAR BLOCK=SPLIT SENTENCE=FRAC VARIABLE=FRAC  &
        ID1=CAOSCRUB
    LIMITS "0.00001" "0.1"

DESIGN-SPEC SOILH2O
    DEFINE SLAG1 STREAM-VAR STREAM=SLAG SUBSTREAM=MIXED  &
        VARIABLE=MASS-FLOW
    DEFINE SLAG2 STREAM-VAR STREAM=SLAG SUBSTREAM=CISOLID  &
        VARIABLE=MASS-FLOW
    DEFINE SOIL STREAM-VAR STREAM=SOIL SUBSTREAM=MIXED  &
        VARIABLE=MASS-FLOW
    SPEC "30.*SOIL" TO "SLAG1+SLAG2"
    TOL-SPEC "0.01"
    VARY STREAM-VAR STREAM=SOIL SUBSTREAM=MIXED  &
        VARIABLE=MASS-FLOW
    LIMITS "1" "1000"

DESIGN-SPEC SOILSOL
    DEFINE SLAG1 STREAM-VAR STREAM=SLAG SUBSTREAM=MIXED  &
        VARIABLE=MASS-FLOW
    DEFINE SLAG2 STREAM-VAR STREAM=SLAG SUBSTREAM=CISOLID  &
        VARIABLE=MASS-FLOW
    DEFINE SOIL STREAM-VAR STREAM=SOIL SUBSTREAM=CISOLID  &
        VARIABLE=MASS-FLOW
    SPEC "3.33333*SOIL" TO "SLAG1+SLAG2"
    TOL-SPEC "0.01"
    VARY STREAM-VAR STREAM=SOIL SUBSTREAM=CISOLID  &
        VARIABLE=MASS-FLOW
    LIMITS "1 " "1000"

CONV-OPTIONS
    PARAM TEAR-METHOD=WEGSTEIN TOL=0.001 SPEC-METHOD=SECANT  &
        OPT-METHOD=COMPLEX COMB-METHOD=NEWTON
    WEGSTEIN MAXIT=200 QMAX=0.5
```

```
    SECANT MAX-STEP-SIZ=.05 BRACKET=NO
REPORT NOCOSTBLOCK NOUNITS NOUTILITIES NOECONOMIC
STREAM-REPOR NOSORT MOLEFLOW MASSFLOW PROPERTIES=SET1 ALL-SUBS
```

System A-5

```
TITLE 'ITTS PHASE I - ROTARY KILN W/ POLYMER STAB - SYSA5-4 (main)'

IN-UNITS ENG

DEF-STREAMS MIXCISLD ALL

DIAGNOSTICS
    TERMINAL SIM-LEVEL=8 CONV-LEVEL=8

SIM-OPTIONS MW-CALC=YES

RUN-CONTROL MAX-TIME=1800

DESCRIPTION "
        ACCEPTS COMBUSTIBLE AND NON-COMBUSTIBLE WASTE, AND METAL FOR MELTING.
        "

DATABANKS COMBUST  / INORGANIC  / PURECOMP  / SOLIDS  /  &
        NOASPENPCD

PROP-SOURCES COMBUST  / INORGANIC  / PURECOMP  / SOLIDS

COMPONENTS
    H2 H2 H2 /
    O2 O2 O2 /
    N2 N2 N2 /
    CL2 CL2 CL2 /
    F2 F2 F2 /
    NO NO NO /
    SO2 O2S SO2 /
    H2O H2O H2O /
    CO2 CO2 CO2 /
    CO CO CO /
    HCL HCL HCL /
    CH4 CH4 CH4 /
    C-S C C-S /
    S-S S S-S /
    S S S /
    NAOH-S NAOH NAOH-S /
    NACL-S NACL NACL-S /
    NAF-S NAF NAF-S /
    AS AS AS /
    CD CD CD /
    HG HG HG /
    SE SE SE /
    FE FE FE /
    SIO2 SIO2 SIO2 /
    AL2O3 AL2O3 AL2O3 /
    FE-S FE FE-S /
    SIO2-S SIO2 SIO2-S /
    AL2O3-S AL2O3 AL2O3-S /
    AS-S AS AS-S /
    BA-S BA BA-S /
    CD-S CD CD-S /
    CR-S CR CR-S /
    PB-S PB PB-S /
    SE-S SE SE-S /
    AG-S AG AG-S /
    CACO3-S CACO3 CACO3-S /
```

```
    MGO-S MGO MGO-S /
    NA2O-S NA2O NA2O-S /
    K2O-S K2O K2O-S /
    FE3O4 FE3O4 FE3O4 /
    FE3O4-S FE3O4 FE3O4-S /
    CAO-S CAO CAO-S

FLOWSHEET
    BLOCK KILN IN=AIRLEAKS AIR FDWASTEC FUELMIX1 COOLH2O  &
        FDWASTEN OUT=OUT1
    BLOCK KILNSEP IN=KILNOUT OUT=ASH KILNVAP
    BLOCK SCC IN=KILNVAP FUELMIX2 OUT=OUT2
    BLOCK BAGHOUSE IN=QUENCHED OUT=HGPLUS FLYASH QNCHVAP
    BLOCK QUENCH IN=SCCOUT QNCH2O OUT=QUENCHED
    BLOCK L-V-SEP IN=SCRUBOUT OUT=SCRUBVAP SCRUBBOT
    BLOCK DUPL1 IN=OUT1 OUT=KILNOUT DUM1IN
    BLOCK Q1 IN=DUM1IN OUT=DUM1OUT
    BLOCK DUPL2 IN=OUT2 OUT=SCCOUT DUM2IN
    BLOCK Q2 IN=DUM2IN OUT=DUM2OUT
    BLOCK SCRUB IN=NAOH SCRUBH2O QNCHVAP OUT=SCRUBOUT
    BLOCK MELTER IN=FDMETMLT OUT=METAL

PROPERTIES SOLIDS
    PROPERTIES IDEAL / RKS-BM

PROP-SET ALL-SUBS TEMP PRES VFRAC UNITS='ATM' SUBSTREAM=ALL

PROP-SET SET1 VLSTDMX UNITS='CUFT/HR' SUBSTREAM=MIXED

STREAM AIR
    SUBSTREAM MIXED TEMP=68 PRES=1 <ATM> MASS-FLOW=7877.802
    MASS-FRAC O2 0.233 / N2 0.767

STREAM AIRLEAKS
    SUBSTREAM MIXED TEMP=68 PRES=1 <ATM>  &
        VOLUME-FLOW=600 <CUFT/MIN>
    MASS-FRAC O2 0.233 / N2 0.767

STREAM COOLH2O
    SUBSTREAM MIXED TEMP=68 PRES=1 <ATM> MASS-FLOW=662.536
    MASS-FRAC H2O 1

STREAM FDMETMLT
    SUBSTREAM MIXED TEMP=68 PRES=1 <ATM> MASS-FLOW=1.20
    MASS-FLOW H2 2.42
    SUBSTREAM CISOLID TEMP=68 PRES=1 <ATM> MASS-FLOW=147.80
    MASS-FLOW C-S 14.44 / FE-S 282.02 / SIO2-S 0.035 /  &
        AL2O3-S 0.035 / BA-S 0.87 / CD-S 0.18

STREAM FDWASTEC
    SUBSTREAM MIXED TEMP=68 PRES=1 <ATM>
    MASS-FLOW H2 50.95 / O2 92.76 / N2 0.23 / CL2 53.02 /  &
        F2 0.11 / H2O 19.83
    SUBSTREAM CISOLID TEMP=68 PRES=1 <ATM>
    MASS-FLOW C-S 326.28 / S-S 0.49 / FE-S 7.67 / SIO2-S  &
        53.01 / AL2O3-S 53.01 / BA-S 0.77 / CD-S 0.77 / CR-S 1.53

STREAM FDWASTEN
    SUBSTREAM MIXED TEMP=68 PRES=1 <ATM>
    MASS-FLOW H2 0.54 / O2 1.44 / N2 0.01 / CL2 14.88 /  &
        NO 0.66 / SO2 0.83 / H2O 354.23 / HG 0.15
    SUBSTREAM CISOLID TEMP=68 PRES=1 <ATM>
```

```
    MASS-FLOW C-S 4.77 / S-S 0.62 / SIO2-S 476.77 /  &
        AL2O3-S 476.77 / AS-S 0.06 / BA-S 0.04 / CD-S 2.63  &
        / CR-S 4.95 / PB-S 0.17 / SE-S 0.03 / AG-S 0.03

STREAM FUELMIX1
    SUBSTREAM MIXED TEMP=68 PRES=1 <ATM> MASS-FLOW=1
    MASS-FRAC O2 0.222 / N2 0.732 / CH4 0.046

STREAM FUELMIX2
    SUBSTREAM MIXED TEMP=68 PRES=1 <ATM> MASS-FLOW=9213.910
    MASS-FRAC O2 0.222 / N2 0.732 / CH4 0.046

STREAM NAOH
    SUBSTREAM MIXED TEMP=68 PRES=1 <ATM>
    SUBSTREAM CISOLID TEMP=68 PRES=1 <ATM> MASS-FLOW=77.611
    MASS-FRAC NAOH-S 1

STREAM OUT1
    SUBSTREAM MIXED TEMP=2500 PRES=1 <ATM>
    MASS-FLOW O2 1293 / N2 14610 / NO 27 / SO2 3 / H2O  &
        1977 / CO2 2598 / HCL 70 / FE3O4 45
    SUBSTREAM CISOLID TEMP=2500 PRES=1 <ATM>
    MASS-FLOW SIO2-S 1069 / AL2O3-S 739 / CR-S 8 / MGO-S  &
        18 / NA2O-S 10 / K2O-S 19 / CAO-S 56

STREAM QNCH2O
    SUBSTREAM MIXED TEMP=68 PRES=1 <ATM> MASS-FLOW=10354.180
    MASS-FRAC H2O 1

STREAM QUENCHED
    SUBSTREAM MIXED TEMP=350 PRES=1 <ATM>
    MASS-FLOW O2 1446 / N2 17490 / CL2 29 / H2O 16320 /  &
        CO2 3088 / HCL 40
    SUBSTREAM CISOLID TEMP=350 PRES=1 <ATM>
    MASS-FLOW SIO2-S 221 / AL2O3-S 148 / CD-S 3.3 / CR-S  &
        1.62 / MGO-S 3.6 / NA2O-S 2 / K2O-S 3.75 / FE3O4-S 9

STREAM SCRUBH2O
    SUBSTREAM MIXED TEMP=68 PRES=1 <ATM> MASS-FLOW=1
    MASS-FRAC H2O 1

STREAM SCRUBOUT
    SUBSTREAM MIXED TEMP=120 PRES=1 <ATM>
    MASS-FLOW O2 1452 / N2 17490 / H2O 373000 / CO2 3088
    SUBSTREAM CISOLID TEMP=120 PRES=1 <ATM>
    MASS-FLOW NACL-S 112

BLOCK BAGHOUSE SEP
    FRAC STREAM=HGPLUS SUBSTREAM=MIXED COMPS=H2 O2 N2 CL2  &
        F2 NO SO2 H2O CO2 CO HCL CH4 C-S S-S S NAOH-S  &
        NACL-S NAF-S AS CD HG SE FE SIO2 AL2O3 FE-S SIO2-S  &
        AL2O3-S AS-S BA-S CD-S CR-S PB-S SE-S AG-S CACO3-S  &
        MGO-S NA2O-S K2O-S FE3O4 FE3O4-S CAO-S FRACS=0 0 0  &
        0 0 0 0 0 0 0 0 0 0 0 0 0 0 0 0 1 1 1 1 0 0  &
        0 0 0 0 1 0 1 0 0 1 0 0 0 0 0 0 0 0
    FRAC STREAM=HGPLUS SUBSTREAM=CISOLID COMPS=C-S S-S NAOH-S  &
        NACL-S NAF-S FE-S SIO2-S AL2O3-S AS-S BA-S CD-S CR-S  &
        PB-S SE-S AG-S CACO3-S MGO-S NA2O-S K2O-S FE3O4-S  &
        CAO-S FRACS=0 0 0 0 0 0 0 0 1 0 1 0 0 1 0 0 0 0 0 0 0
    FRAC STREAM=FLYASH SUBSTREAM=MIXED COMPS=H2 O2 N2 CL2  &
        F2 NO SO2 H2O CO2 CO HCL CH4 C-S S-S S NAOH-S  &
        NACL-S NAF-S AS CD HG SE FE SIO2 AL2O3 FE-S SIO2-S  &
```

```
        AL2O3-S AS-S BA-S CD-S CR-S PB-S SE-S AG-S CACO3-S  &
        MGO-S NA2O-S K2O-S FE3O4 FE3O4-S CAO-S FRACS=0 0 0  &
        0 0 0 0 0 0 0 0 0 1 1 1 1 1 1 0 0 0 0 1 1  &
        1 1 1 1 0 1 0 1 1 0 1 1 1 1 1 1 1 1
    FRAC STREAM=FLYASH SUBSTREAM=CISOLID COMPS=C-S S-S NAOH-S  &
        NACL-S NAF-S FE-S SIO2-S AL2O3-S AS-S BA-S CD-S CR-S  &
        PB-S SE-S AG-S CACO3-S MGO-S NA2O-S K2O-S FE3O4-S  &
        CAO-S FRACS=1 1 1 1 1 1 1 1 0 1 0 1 1 0 1 1 1 1 1 1 1

BLOCK KILNSEP SEP
    FRAC STREAM=ASH SUBSTREAM=MIXED COMPS=H2 O2 N2 CL2 F2  &
        NO SO2 H2O CO2 CO HCL CH4 C-S S-S S NAOH-S NACL-S  &
        NAF-S AS CD HG SE FE SIO2 AL2O3 FE-S SIO2-S AL2O3-S  &
        AS-S BA-S CD-S CR-S PB-S SE-S AG-S CACO3-S MGO-S  &
        NA2O-S K2O-S FE3O4 FE3O4-S CAO-S FRACS=0 0 0 0 0 0  &
        0 0 0 0 0 0 .8 .8 0 .8 .8 .8 0 0 0 0 .8 .8  &
        .8 .8 .8 .8 .8 .8 .8 .8 .8 .8 .8 .8 .8 .8 .8 .8 .8 .8
    FRAC STREAM=ASH SUBSTREAM=CISOLID COMPS=C-S S-S NAOH-S  &
        NACL-S NAF-S FE-S SIO2-S AL2O3-S AS-S BA-S CD-S CR-S  &
        PB-S SE-S AG-S CACO3-S MGO-S NA2O-S K2O-S FE3O4-S  &
        CAO-S FRACS=.8 .8 .8 .8 .8 .8 .8 .8 .8 .8 .8 .8  &
        .8 .8 .8 .8 .8 .8 .8 .8 .8

BLOCK L-V-SEP FLASH2
    PARAM TEMP=120 PRES=1 <ATM>

BLOCK KILN RGIBBS
    PARAM TEMP=1600 PRES=1 <ATM> NPHASE=2
    PROD H2 / O2 / N2 / CL2 / F2 / NO / SO2 / H2O /  &
        CO2 / CO / HCL / AS / CD / HG / SE / FE-S SS  &
        / SIO2-S SS / AL2O3-S SS / AS-S SS / BA-S SS /  &
        CD-S SS / CR-S SS / PB-S SS / SE-S SS / AG-S SS  &
        / MGO-S SS / NA2O-S SS / K2O-S SS / FE3O4-S SS / CAO-S SS
    PROD-FRAC FE-S 1

BLOCK MELTER RGIBBS
    PARAM TEMP=3000 PRES=1 <ATM> NPHASE=2
    PROD H2 / C-S SS / FE / SIO2 / AL2O3 / FE-S SS /  &
        SIO2-S SS / AL2O3-S SS / BA-S SS / CD / CD-S SS

BLOCK Q1 RGIBBS
    PARAM TEMP=68 PRES=1 <ATM> NPHASE=2 TAPP=1532
    PROD H2 / O2 / N2 / CL2 / F2 / NO / SO2 / H2O /  &
        CO2 / CO / HCL / AS / CD / HG / SE / FE-S SS  &
        / SIO2-S SS / AL2O3-S SS / AS-S SS / BA-S SS /  &
        CD-S SS / CR-S SS / PB-S SS / SE-S SS / AG-S SS  &
        / MGO-S SS / NA2O-S SS / K2O-S SS / FE3O4-S SS /  &
        CAO-S SS
    PROD-FRAC FE-S 1

BLOCK Q2 RGIBBS
    PARAM TEMP=68 PRES=1 <ATM> NPHASE=2 CHEMEQ=YES TAPP=2132
    PROD H2 / O2 / N2 / CL2 / F2 / NO / SO2 / H2O /  &
        CO2 / CO / HCL / CH4 / S / AS / CD / HG / SE  &
        / FE-S SS / SIO2-S SS / AL2O3-S SS / BA-S SS /  &
        CR-S SS / PB-S SS / AG-S SS / MGO-S SS / NA2O-S  &
        SS / K2O-S SS / FE3O4-S SS / CAO-S SS
    PROD-FRAC FE-S 1 / FE3O4-S 1

BLOCK QUENCH RGIBBS
    PARAM TEMP=350 PRES=1 <ATM> NPHASE=2
    PROD H2 / O2 / N2 / F2 / NO / SO2 / H2O / CO2 /  &
```

```
        CO / HCL / AS / CD / HG / SE / FE-S SS /  &
        SIO2-S SS / AL2O3-S SS / AS-S SS / BA-S SS /  &
        CD-S SS / CR-S SS / PB-S SS / SE-S SS / AG-S SS  &
        / MGO-S SS / NA2O-S SS / K2O-S SS / FE3O4-S SS / CAO-S SS
    PROD-FRAC FE-S 1

BLOCK SCC RGIBBS
    PARAM TEMP=2200 PRES=1 <ATM> NPHASE=2
    PROD H2 / O2 / N2 / CL2 / F2 / NO / SO2 / H2O /  &
        CO2 / CO / HCL / CH4 / S / AS / CD / HG / SE  &
        / FE-S SS / SIO2-S SS / AL2O3-S SS / BA-S SS /  &
        CR-S SS / PB-S SS / AG-S SS / MGO-S SS / NA2O-S  &
        SS / K2O-S SS / FE3O4-S SS / CAO-S SS
    PROD-FRAC FE-S 1

BLOCK SCRUB RGIBBS
    PARAM TEMP=120 PRES=1 <ATM> NPHASE=2
    PROD H2 / O2 / N2 / CL2 / F2 / NO / SO2 / H2O /  &
        CO2 / CO / HCL / NAOH-S SS / NACL-S SS / NAF-S SS

BLOCK DUPL1 DUPL

BLOCK DUPL2 DUPL

DESIGN-SPEC NAOH
    DEFINE CAUIN MASS-FLOW STREAM=NAOH SUBSTREAM=CISOLID  &
        COMPONENT=NAOH-S
    DEFINE CAUOUT MASS-FLOW STREAM=SCRUBOUT SUBSTREAM=CISOLID  &
        COMPONENT=NAOH-S
    SPEC "CAUIN-100.*CAUOUT" TO "0"
    TOL-SPEC "0.01"
    VARY STREAM-VAR STREAM=NAOH SUBSTREAM=CISOLID  &
        VARIABLE=MASS-FLOW
    LIMITS "70" "1000"

DESIGN-SPEC OXI
    DEFINE AIR MASS-FLOW STREAM=AIR SUBSTREAM=MIXED  &
        COMPONENT=O2
    DEFINE WC MASS-FLOW STREAM=FDWASTEC SUBSTREAM=MIXED  &
        COMPONENT=O2
    DEFINE F1 MASS-FLOW STREAM=FUELMIX1 SUBSTREAM=MIXED  &
        COMPONENT=O2
    DEFINE OXOUT MASS-FLOW STREAM=KILNOUT SUBSTREAM=MIXED  &
        COMPONENT=O2
    DEFINE AL MASS-FLOW STREAM=AIRLEAKS SUBSTREAM=MIXED  &
        COMPONENT=O2
    SPEC "AL+AIR+WC+(F1/6.0)" TO "2.0*OXOUT"
    TOL-SPEC "0.1"
    VARY STREAM-VAR STREAM=AIR SUBSTREAM=MIXED  &
        VARIABLE=MASS-FLOW
    LIMITS "1" "10000"

DESIGN-SPEC QKILN
    DEFINE QKILN BLOCK-VAR BLOCK=KILN VARIABLE=QCALC  &
        SENTENCE=PARAM
    DEFINE Q1 BLOCK-VAR BLOCK=Q1 VARIABLE=QCALC SENTENCE=PARAM
    SPEC "QKILN" TO "0.05*Q1"
    TOL-SPEC "10."
    VARY STREAM-VAR STREAM=COOLH2O SUBSTREAM=MIXED  &
        VARIABLE=MASS-FLOW
    LIMITS "1" "50000"
```

```
DESIGN-SPEC QQUENCH
    DEFINE QQNCH BLOCK-VAR BLOCK=QUENCH VARIABLE=QCALC  &
        SENTENCE=PARAM
    SPEC "QQNCH" TO "0"
    TOL-SPEC "1."
    VARY STREAM-VAR STREAM=QNCH2O SUBSTREAM=MIXED  &
        VARIABLE=MASS-FLOW
    LIMITS "1" "20000"

DESIGN-SPEC QSCC
    DEFINE QSCC BLOCK-VAR BLOCK=SCC VARIABLE=QCALC  &
        SENTENCE=PARAM
    DEFINE Q2 BLOCK-VAR BLOCK=Q2 VARIABLE=QCALC SENTENCE=PARAM
    SPEC "QSCC" TO "0.05*Q2"
    TOL-SPEC "10."
    VARY STREAM-VAR STREAM=FUELMIX2 SUBSTREAM=MIXED  &
        VARIABLE=MASS-FLOW
    LIMITS "1" "100000"

DESIGN-SPEC SCRUBH2O
    DEFINE MASSAL STREAM-VAR STREAM=SCRUBBOT SUBSTREAM=CISOLID  &
        VARIABLE=MASS-FLOW
    DEFINE SCRUB STREAM-VAR STREAM=SCRUBH2O SUBSTREAM=MIXED  &
        VARIABLE=MASS-FLOW
    DEFINE NAOH STREAM-VAR STREAM=NAOH SUBSTREAM=CISOLID  &
        VARIABLE=MASS-FLOW
    SPEC "SCRUB" TO "20*MASSAL"
    TOL-SPEC "0.01"
    VARY STREAM-VAR STREAM=SCRUBH2O SUBSTREAM=MIXED  &
        VARIABLE=MASS-FLOW
    LIMITS "NAOH" "5000"

CONV-OPTIONS
    SECANT MAX-STEP-SIZ=.05 BRACKET=YES

STREAM-REPOR NOSORT MOLEFLOW MASSFLOW PROPERTIES=SET1 ALL-SUBS
```

System A-6

```
TITLE  &
        'ITTS PHASE I - ROTARY KILN W/ MAX RECYCLING - SYSA6-4 (main)'

IN-UNITS ENG

DEF-STREAMS MIXCISLD ALL

DIAGNOSTICS
    TERMINAL SIM-LEVEL=8 CONV-LEVEL=8

SIM-OPTIONS MW-CALC=YES

RUN-CONTROL MAX-TIME=1800

DESCRIPTION "
        ACCEPTS COMBUSTIBLE AND NON-COMBUSTIBLE WASTE, AND METAL FOR MELTING.
        ASSUME 140 LBS/HR OF METAL GETS RECYCLED (OUT OF ABOUT 147) INSTEAD
        OF GOING TO KILN. "

DATABANKS COMBUST  / INORGANIC  / PURECOMP  / SOLIDS  /  &
        NOASPENPCD

PROP-SOURCES COMBUST  / INORGANIC  / PURECOMP  / SOLIDS

COMPONENTS
    H2 H2 H2 /
    O2 O2 O2 /
    N2 N2 N2 /
    CL2 CL2 CL2 /
    F2 F2 F2 /
    NO NO NO /
    SO2 O2S SO2 /
    H2O H2O H2O /
    CO2 CO2 CO2 /
    CO CO CO /
    HCL HCL HCL /
    CH4 CH4 CH4 /
    C-S C C-S /
    S-S S S-S /
    S S S /
    NAOH-S NAOH NAOH-S /
    NACL-S NACL NACL-S /
    NAF-S NAF NAF-S /
    AS AS AS /
    CD CD CD /
    HG HG HG /
    SE SE SE /
    FE FE FE /
    SIO2 SIO2 SIO2 /
    AL2O3 AL2O3 AL2O3 /
    FE-S FE FE-S /
    SIO2-S SIO2 SIO2-S /
    AL2O3-S AL2O3 AL2O3-S /
    AS-S AS AS-S /
    BA-S BA BA-S /
    CD-S CD CD-S /
    CR-S CR CR-S /
    PB-S PB PB-S /
    SE-S SE SE-S /
```

```
    AG-S AG AG-S /
    CACO3-S CACO3 CACO3-S /
    MGO-S MGO MGO-S /
    NA2O-S NA2O NA2O-S /
    K2O-S K2O K2O-S /
    FE3O4 FE3O4 FE3O4 /
    FE3O4-S FE3O4 FE3O4-S /
    CAO-S CAO CAO-S

FLOWSHEET
    BLOCK KILN IN=SOIL FUELMIX1 AIR AIRLEAKS COOLH2O FDWASTE  &
        OUT=OUT1
    BLOCK KILNSEP IN=KILNOUT OUT=ASH KILNVAP
    BLOCK SCC IN=KILNVAP FUELMIX2 OUT=OUT2
    BLOCK BAGHOUSE IN=QUENCHED OUT=HGPLUS FLYASH QNCHVAP
    BLOCK QUENCH IN=SCCOUT QNCH2O OUT=QUENCHED
    BLOCK L-V-SEP IN=SCRUBOUT OUT=SCRUBVAP SCRUBBOT
    BLOCK DUPL1 IN=OUT1 OUT=KILNOUT DUM1IN
    BLOCK Q1 IN=DUM1IN OUT=DUM1OUT
    BLOCK DUPL2 IN=OUT2 OUT=SCCOUT DUM2IN
    BLOCK Q2 IN=DUM2IN OUT=DUM2OUT
    BLOCK VITRIFY IN=FLYASH ASH OUT=VITOUT
    BLOCK L-V-SEP2 IN=VITOUT OUT=VITVAP SLAG
    BLOCK SCRUB IN=NAOH QNCHVAP USEDNAOH SCRUBH2O OUT= SCRUBOUT
    BLOCK METALSEP IN=FDWASTEN FDWASTEC OUT=CASTMET FDWASTE
    BLOCK SALT-SEP IN=PRODUCTS OUT=USEDNAOH RECYCLE HCL-SOLN  &
        GAS-SALT
    BLOCK SPLITTER IN=SCRUBBOT OUT=PRODUCTS
    BLOCK MELTER IN=FDMETMLT OUT=METAL

PROPERTIES SOLIDS
    PROPERTIES IDEAL / RKS-BM

PROP-SET ALL-SUBS TEMP PRES VFRAC UNITS='ATM' SUBSTREAM=ALL

PROP-SET SET1 VOLFLMX UNITS='CUFT/HR' SUBSTREAM=ALL

STREAM AIR
    SUBSTREAM MIXED TEMP=68 PRES=1 <ATM> MASS-FLOW=7858.798
    MASS-FRAC O2 0.233 / N2 0.767

STREAM AIRLEAKS
    SUBSTREAM MIXED TEMP=68 PRES=1 <ATM>  &
        VOLUME-FLOW=600 <CUFT/MIN>
    MASS-FRAC O2 0.233 / N2 0.767

STREAM COOLH2O
    SUBSTREAM MIXED TEMP=68 PRES=1 <ATM> MASS-FLOW=1
    MASS-FRAC H2O 1

STREAM FDMETMLT
    SUBSTREAM MIXED TEMP=68 PRES=1 <ATM> MASS-FLOW=1.20
    MASS-FLOW H2 2.42
    SUBSTREAM CISOLID TEMP=68 PRES=1 <ATM> MASS-FLOW=147.80
    MASS-FLOW C-S 14.44 / FE-S 282.02 / SIO2-S 0.035 /  &
        AL2O3-S 0.035 / BA-S 0.87 / CD-S 0.18

STREAM FDWASTEC
    SUBSTREAM MIXED TEMP=68 PRES=1 <ATM>
    MASS-FLOW H2 50.95 / O2 92.76 / N2 0.23 / CL2 53.02 /  &
        F2 0.11 / H2O 19.83
    SUBSTREAM CISOLID TEMP=68 PRES=1 <ATM>
```

```
    MASS-FLOW C-S 326.28 / S-S 0.49 / FE-S 7.67 / SIO2-S  &
        53.01 / AL2O3-S 53.01 / BA-S 0.77 / CD-S 0.77 / CR-S 1.53

STREAM FDWASTEN
    SUBSTREAM MIXED TEMP=68 PRES=1 <ATM>
    MASS-FLOW H2 0.54 / O2 1.44 / N2 0.01 / CL2 14.88 /  &
        NO 0.66 / SO2 0.83 / H2O 354.23 / HG 0.15
    SUBSTREAM CISOLID TEMP=68 PRES=1 <ATM>
    MASS-FLOW C-S 4.77 / S-S 0.62 / SIO2-S 476.77 /  &
        AL2O3-S 476.77 / AS-S 0.06 / BA-S 0.04 / CD-S 2.63  &
        / CR-S 4.95 / PB-S 0.17 / SE-S 0.03 / AG-S 0.03

STREAM FUELMIX1
    SUBSTREAM MIXED TEMP=68 PRES=1 <ATM> MASS-FLOW=1
    MASS-FRAC O2 0.222 / N2 0.732 / CH4 0.046

STREAM FUELMIX2
    SUBSTREAM MIXED TEMP=68 PRES=1 <ATM> MASS-FLOW=1
    MASS-FRAC O2 0.222 / N2 0.732 / CH4 0.046

STREAM NAOH
    SUBSTREAM MIXED TEMP=68 PRES=1 <ATM>
    SUBSTREAM CISOLID TEMP=68 PRES=1 <ATM> MASS-FLOW=0.8
    MASS-FRAC NAOH-S 1

STREAM OUT1
    SUBSTREAM MIXED TEMP=2500 PRES=1 <ATM>
    MASS-FLOW O2 1293 / N2 14610 / NO 27 / SO2 3 / H2O  &
        1977 / CO2 2598 / HCL 70 / FE3O4 45
    SUBSTREAM CISOLID TEMP=2500 PRES=1 <ATM>
    MASS-FLOW SIO2-S 1069 / AL2O3-S 739 / CR-S 8 / MGO-S  &
        18 / NA2O-S 10 / K2O-S 19 / CAO-S 56

STREAM QNCH2O
    SUBSTREAM MIXED TEMP=68 PRES=1 <ATM> MASS-FLOW=10224
    MASS-FRAC H2O 1

STREAM QUENCHED
    SUBSTREAM MIXED TEMP=350 PRES=1 <ATM>
    MASS-FLOW O2 1446 / N2 17490 / CL2 29 / H2O 16320 /  &
        CO2 3088 / HCL 40
    SUBSTREAM CISOLID TEMP=350 PRES=1 <ATM>
    MASS-FLOW SIO2-S 221 / AL2O3-S 148 / CD-S 3.3 / CR-S  &
        1.62 / MGO-S 3.6 / NA2O-S 2 / K2O-S 3.75 / FE3O4-S 9

STREAM SCRUBH2O
    SUBSTREAM MIXED TEMP=68 PRES=1 <ATM> MASS-FLOW=2
    MASS-FRAC H2O 1

STREAM SCRUBOUT
    SUBSTREAM MIXED TEMP=120 PRES=1 <ATM>
    MASS-FLOW O2 1452 / N2 17490 / H2O 373000 / CO2 3088
    SUBSTREAM CISOLID TEMP=120 PRES=1 <ATM>
    MASS-FLOW NACL-S 112

STREAM SOIL
    SUBSTREAM MIXED TEMP=68 PRES=1 <ATM> MASS-FLOW=50
    MASS-FLOW H2O 0.1
    SUBSTREAM CISOLID TEMP=68 PRES=1 <ATM> MASS-FLOW=450
    MASS-FLOW SIO2-S 0.569 / AL2O3-S 0.102 / CACO3-S 0.128 /  &
        MGO-S 0.023 / NA2O-S 0.013 / K2O-S 0.024 / FE3O4-S 0.041
```

```
BLOCK BAGHOUSE SEP
    FRAC STREAM=HGPLUS SUBSTREAM=MIXED COMPS=H2 O2 N2 CL2  &
        F2 NO SO2 H2O CO2 CO HCL CH4 C-S S-S S NAOH-S  &
        NACL-S NAF-S AS CD HG SE FE SIO2 AL2O3 FE-S SIO2-S  &
        AL2O3-S AS-S BA-S CD-S CR-S PB-S SE-S AG-S CACO3-S  &
        MGO-S NA2O-S K2O-S FE3O4 FE3O4-S CAO-S FRACS=0 0 0  &
        0 0 0 0 0 0 0 0 0 0 0 0 0 0 0 1 1 1 1 0 0  &
        0 0 0 0 1 0 1 0 0 1 0 0 0 0 0 0 0 0
    FRAC STREAM=HGPLUS SUBSTREAM=CISOLID COMPS=C-S S-S NAOH-S  &
        NACL-S NAF-S FE-S SIO2-S AL2O3-S AS-S BA-S CD-S CR-S  &
        PB-S SE-S AG-S CACO3-S MGO-S NA2O-S K2O-S FE3O4-S  &
        CAO-S FRACS=0 0 0 0 0 0 0 0 1 0 1 0 0 1 0 0 0 0 0 0 0
    FRAC STREAM=FLYASH SUBSTREAM=MIXED COMPS=H2 O2 N2 CL2  &
        F2 NO SO2 H2O CO2 CO HCL CH4 C-S S-S S NAOH-S  &
        NACL-S NAF-S AS CD HG SE FE SIO2 AL2O3 FE-S SIO2-S  &
        AL2O3-S AS-S BA-S CD-S CR-S PB-S SE-S AG-S CACO3-S  &
        MGO-S NA2O-S K2O-S FE3O4 FE3O4-S CAO-S FRACS=0 0 0  &
        0 0 0 0 0 0 0 0 0 1 1 1 1 1 1 0 0 0 0 1 1  &
        1 1 1 1 0 1 0 1 1 0 1 1 1 1 1 1 1 1
    FRAC STREAM=FLYASH SUBSTREAM=CISOLID COMPS=C-S S-S NAOH-S  &
        NACL-S NAF-S FE-S SIO2-S AL2O3-S AS-S BA-S CD-S CR-S  &
        PB-S SE-S AG-S CACO3-S MGO-S NA2O-S K2O-S FE3O4-S  &
        CAO-S FRACS=1 1 1 1 1 1 1 1 0 1 0 1 1 0 1 1 1 1 1 1 1
    FLASH-SPECS FLYASH TEMP=68 PRES=1 <ATM>

BLOCK KILNSEP SEP
    FRAC STREAM=ASH SUBSTREAM=MIXED COMPS=H2 O2 N2 CL2 F2  &
        NO SO2 H2O CO2 CO HCL CH4 C-S S-S S NAOH-S NACL-S  &
        NAF-S AS CD HG SE FE SIO2 AL2O3 FE-S SIO2-S AL2O3-S  &
        AS-S BA-S CD-S CR-S PB-S SE-S AG-S CACO3-S MGO-S  &
        NA2O-S K2O-S FE3O4 FE3O4-S CAO-S FRACS=0 0 0 0 0 0  &
        0 0 0 0 0 0 .8 .8 0 .8 .8 .8 0 0 0 0 .8 .8  &
        .8 .8 .8 .8 .8 .8 .8 .8 .8 .8 .8 .8 .8 .8 .8 .8 .8 .8
    FRAC STREAM=ASH SUBSTREAM=CISOLID COMPS=C-S S-S NAOH-S  &
        NACL-S NAF-S FE-S SIO2-S AL2O3-S AS-S BA-S CD-S CR-S  &
        PB-S SE-S AG-S CACO3-S MGO-S NA2O-S K2O-S FE3O4-S  &
        CAO-S FRACS=.8 .8 .8 .8 .8 .8 .8 .8 .8 .8 .8 .8 .8  &
        .8 .8 .8 .8 .8 .8 .8 .8 .8
    FLASH-SPECS ASH TEMP=68 PRES=1 <ATM>

BLOCK METALSEP SEP
    FRAC STREAM=CASTMET SUBSTREAM=MIXED COMPS=H2 O2 N2 CL2  &
        F2 NO SO2 H2O CO2 CO HCL CH4 C-S S-S S NAOH-S  &
        NACL-S NAF-S AS CD HG SE FE SIO2 AL2O3 FE-S SIO2-S  &
        AL2O3-S AS-S BA-S CD-S CR-S PB-S SE-S AG-S CACO3-S  &
        MGO-S NA2O-S K2O-S FE3O4 FE3O4-S CAO-S FRACS=0 0 0  &
        0 0 0 0 0 0 0 0 0 0 0 0 0 0 0 0 0 0 0 0 0  &
        0 0 0 0 0 0 0 0 0 0 0 0 0 0 0 0 0 0
    FRAC STREAM=CASTMET SUBSTREAM=CISOLID COMPS=C-S S-S  &
        NAOH-S NACL-S NAF-S FE-S SIO2-S AL2O3-S AS-S BA-S  &
        CD-S CR-S PB-S SE-S AG-S CACO3-S MGO-S NA2O-S K2O-S  &
        FE3O4-S CAO-S FRACS=0 0 0 0 0 1 0 0 0 0 0 0 0  &
        0 0 0 0 0 0 0 0
    FLASH-SPECS CASTMET TEMP=68 PRES=1 <ATM>
    FLASH-SPECS FDWASTE TEMP=68 PRES=1 <ATM>

BLOCK SALT-SEP SEP
    FRAC STREAM=USEDNAOH SUBSTREAM=MIXED COMPS=H2 O2 N2 CL2  &
        F2 NO SO2 H2O CO2 CO HCL CH4 C-S S-S S NAOH-S  &
        NACL-S NAF-S AS CD HG SE FE SIO2 AL2O3 FE-S SIO2-S  &
        AL2O3-S AS-S BA-S CD-S CR-S PB-S SE-S AG-S CACO3-S  &
        MGO-S NA2O-S K2O-S FE3O4 FE3O4-S CAO-S FRACS=0 0 0  &
```

```
        0 0 0 0 0 0 0 0 0 0 0 0 0.98 0 0 0 0 0 0 0  &
        0 0 0 0 0 0 0 0 0 0 0 0 0 0 0 0 0 0 0
    FRAC STREAM=USEDNAOH SUBSTREAM=CISOLID COMPS=C-S S-S  &
        NAOH-S NACL-S NAF-S FE-S SIO2-S AL2O3-S AS-S BA-S  &
        CD-S CR-S PB-S SE-S AG-S CACO3-S MGO-S NA2O-S K2O-S  &
        FE3O4-S CAO-S FRACS=0 0 0.98 0 0 0 0 0 0 0 0 0 0  &
        0 0 0 0 0 0 0 0 0
    FRAC STREAM=HCL-SOLN SUBSTREAM=MIXED COMPS=H2 O2 N2 CL2  &
        F2 NO SO2 H2O CO2 CO HCL CH4 C-S S-S S NAOH-S  &
        NACL-S NAF-S AS CD HG SE FE SIO2 AL2O3 FE-S SIO2-S  &
        AL2O3-S AS-S BA-S CD-S CR-S PB-S SE-S AG-S CACO3-S  &
        MGO-S NA2O-S K2O-S FE3O4 FE3O4-S CAO-S FRACS=0 0 0  &
        0 0 0 0 0 0 0 1 0 0 0 0 0 0 0 0 0 0 0 0 0  &
        0 0 0 0 0 0 0 0 0 0 0 0 0 0 0 0 0 0 0
    FRAC STREAM=HCL-SOLN SUBSTREAM=CISOLID COMPS=C-S S-S  &
        NAOH-S NACL-S NAF-S FE-S SIO2-S AL2O3-S AS-S BA-S  &
        CD-S CR-S PB-S SE-S AG-S CACO3-S MGO-S NA2O-S K2O-S  &
        FE3O4-S CAO-S FRACS=0 0 0 0 0 0 0 0 0 0 0 0 0 0  &
        0 0 0 0 0 0 0 0
    FRAC STREAM=GAS-SALT SUBSTREAM=MIXED COMPS=H2 O2 N2 CL2  &
        F2 NO SO2 H2O CO2 CO HCL CH4 C-S S-S S NAOH-S  &
        NACL-S NAF-S AS CD HG SE FE SIO2 AL2O3 FE-S SIO2-S  &
        AL2O3-S AS-S BA-S CD-S CR-S PB-S SE-S AG-S CACO3-S  &
        MGO-S NA2O-S K2O-S FE3O4 FE3O4-S CAO-S FRACS=1 1 1  &
        1 1 1 1 0 1 1 0 1 1 1 1 0 1 1 1 1 1 1 1 1 1  &
        1 1 1 1 1 1 1 1 1 1 1 1 1 1 1 1 1 1 1
    FRAC STREAM=GAS-SALT SUBSTREAM=CISOLID COMPS=C-S S-S  &
        NAOH-S NACL-S NAF-S FE-S SIO2-S AL2O3-S AS-S BA-S  &
        CD-S CR-S PB-S SE-S AG-S CACO3-S MGO-S NA2O-S K2O-S  &
        FE3O4-S CAO-S FRACS=1 1 0 1 1 1 1 1 1 1 1 1 1  &
        1 1 1 1 1 1 1 1
    FLASH-SPECS USEDNAOH TEMP=68 PRES=1 <ATM>
    FLASH-SPECS HCL-SOLN TEMP=68 PRES=1 <ATM>
    FLASH-SPECS RECYCLE TEMP=68 PRES=1 <ATM>

BLOCK L-V-SEP FLASH2
    PARAM TEMP=120 PRES=1 <ATM>

BLOCK L-V-SEP2 FLASH2
    PARAM TEMP=3000 PRES=1 <ATM>

BLOCK SPLITTER RSTOIC
    PARAM TEMP=221 PRES=1 <ATM>
    STOIC 1 CISOLID NACL-S -1 / MIXED H2O -1 / HCL 1 /  &
        CISOLID NAOH-S 1
    CONV 1 CISOLID NACL-S 1

BLOCK KILN RGIBBS
    PARAM TEMP=1600 PRES=1 <ATM> NPHASE=2 MAXIT=500
    PROD H2 / O2 / N2 / CL2 / F2 / NO / SO2 / H2O /  &
        CO2 / CO / HCL / AS / CD / HG / SE / SIO2-S  &
        SS / AL2O3-S SS / AS-S SS / BA-S SS / CD-S SS /  &
        CR-S SS / PB-S SS / SE-S SS / AG-S SS / MGO-S  &
        SS / NA2O-S SS / K2O-S SS / FE3O4-S SS / CAO-S SS
    BLOCK-OPTION RESTART=NO

BLOCK MELTER RGIBBS
    PARAM TEMP=3000 PRES=1 <ATM> NPHASE=2
    PROD H2 / C-S SS / FE / SIO2 / AL2O3 / FE-S SS /  &
        SIO2-S SS / AL2O3-S SS / BA-S SS / CD / CD-S SS

BLOCK Q1 RGIBBS
```

```
    PARAM TEMP=68 PRES=1 <ATM> NPHASE=2 TAPP=1532
    PROD H2 / O2 / N2 / CL2 / F2 / NO / SO2 / H2O /  &
        CO2 / CO / HCL / AS / CD / HG / SE / SIO2-S  &
        SS / AL2O3-S SS / AS-S SS / BA-S SS / CD-S SS /  &
        CR-S SS / PB-S SS / SE-S SS / AG-S SS / MGO-S  &
        SS / NA2O-S SS / K2O-S SS / FE3O4-S SS / CAO-S SS
    BLOCK-OPTION RESTART=NO

BLOCK Q2 RGIBBS
    PARAM TEMP=68 PRES=1 <ATM> NPHASE=2 CHEMEQ=YES TAPP=2132
    PROD H2 / O2 / N2 / CL2 / F2 / NO / SO2 / H2O /  &
        CO2 / CO / HCL / CH4 / S / AS / CD / HG / SE  &
        / SIO2-S SS / AL2O3-S SS / BA-S SS / CR-S SS /  &
        PB-S SS / AG-S SS / MGO-S SS / NA2O-S SS / K2O-S  &
        SS / FE3O4-S SS / CAO-S SS
    BLOCK-OPTION RESTART=NO

BLOCK QUENCH RGIBBS
    PARAM TEMP=350 PRES=1 <ATM> NPHASE=2 MAXIT=500
    PROD H2 / O2 / N2 / F2 / NO / SO2 / H2O / CO2 /  &
        CO / HCL / AS / CD / HG / SE / SIO2-S SS /  &
        AL2O3-S SS / AS-S SS / BA-S SS / CD-S SS / CR-S  &
        SS / PB-S SS / SE-S SS / AG-S SS / MGO-S SS /  &
        NA2O-S SS / K2O-S SS / FE3O4-S SS / CAO-S SS
    BLOCK-OPTION RESTART=NO

BLOCK SCC RGIBBS
    PARAM TEMP=2200 PRES=1 <ATM> NPHASE=2
    PROD H2 / O2 / N2 / CL2 / F2 / NO / SO2 / H2O /  &
        CO2 / CO / HCL / CH4 / S / AS / CD / HG / SE  &
        / SIO2-S SS / AL2O3-S SS / BA-S SS / CR-S SS /  &
        PB-S SS / AG-S SS / MGO-S SS / NA2O-S SS / K2O-S  &
        SS / FE3O4-S SS / CAO-S SS
    BLOCK-OPTION RESTART=NO

BLOCK SCRUB RGIBBS
    PARAM TEMP=120 PRES=1 <ATM> NPHASE=2 MAXIT=500
    PROD H2 / O2 / N2 / CL2 / SO2 / H2O / CO2 / CO /  &
        HCL / NAOH-S SS / NACL-S SS / NAF-S SS
    BLOCK-OPTION RESTART=NO

BLOCK VITRIFY RGIBBS
    PARAM TEMP=3000 PRES=1 <ATM> NPHASE=2
    PROD H2 / O2 / N2 / CL2 / F2 / NO / SO2 / H2O /  &
        CO2 / CO / HCL / C-S / S / AS / CD / HG / SE  &
        / SIO2 / AL2O3 / AS-S SS / BA-S SS / CD-S SS /  &
        CR-S SS / PB-S SS / SE-S SS / AG-S SS / MGO-S  &
        SS / NA2O-S SS / K2O-S SS / FE3O4-S SS / CAO-S SS
    BLOCK-OPTION RESTART=NO

BLOCK DUPL1 DUPL

BLOCK DUPL2 DUPL

DESIGN-SPEC HCL
    DEFINE HCL MASS-FLOW STREAM=HCL-SOLN SUBSTREAM=MIXED  &
        COMPONENT=HCL
    DEFINE H2O MASS-FLOW STREAM=HCL-SOLN SUBSTREAM=MIXED  &
        COMPONENT=H2O
    SPEC "HCL-H2O" TO "0"
    TOL-SPEC "0.01"
    VARY BLOCK-VAR BLOCK=SALT-SEP SENTENCE=FRAC VARIABLE=FRACS  &
```

```
        ID1=MIXED ID2=HCL-SOLN ELEMENT=8
    LIMITS "0.0001" "1"

DESIGN-SPEC NAOH
    DEFINE CAUIN1 MASS-FLOW STREAM=NAOH SUBSTREAM=CISOLID  &
        COMPONENT=NAOH-S
    DEFINE CAUIN2 MASS-FLOW STREAM=USEDNAOH SUBSTREAM=CISOLID  &
        COMPONENT=NAOH-S
    DEFINE CAUOUT MASS-FLOW STREAM=SCRUBOUT SUBSTREAM=CISOLID  &
        COMPONENT=NAOH-S
    SPEC "CAUIN1+CAUIN2-100.*CAUOUT" TO "0.    "
    TOL-SPEC "0.005"
    VARY STREAM-VAR STREAM=NAOH SUBSTREAM=CISOLID  &
        VARIABLE=MASS-FLOW
    LIMITS "0.001" "100 "

DESIGN-SPEC OXI
    DEFINE AIR MASS-FLOW STREAM=AIR SUBSTREAM=MIXED  &
        COMPONENT=O2
    DEFINE FD MASS-FLOW STREAM=FDWASTE SUBSTREAM=MIXED  &
        COMPONENT=O2
    DEFINE F1 MASS-FLOW STREAM=FUELMIX1 SUBSTREAM=MIXED  &
        COMPONENT=O2
    DEFINE OXOUT MASS-FLOW STREAM=KILNOUT SUBSTREAM=MIXED  &
        COMPONENT=O2
    DEFINE AL MASS-FLOW STREAM=AIRLEAKS SUBSTREAM=MIXED  &
        COMPONENT=O2
    SPEC "AL+AIR+FD+(F1/6.0)" TO "2.0*OXOUT"
    TOL-SPEC "1  "
    VARY STREAM-VAR STREAM=AIR SUBSTREAM=MIXED  &
        VARIABLE=MASS-FLOW
    LIMITS "1" "10000"

DESIGN-SPEC QKILN
    DEFINE QKILN BLOCK-VAR BLOCK=KILN VARIABLE=QCALC  &
        SENTENCE=PARAM
    DEFINE Q1 BLOCK-VAR BLOCK=Q1 VARIABLE=QCALC SENTENCE=PARAM
    SPEC "QKILN" TO "0.05*Q1"
    TOL-SPEC "10."
    VARY STREAM-VAR STREAM=COOLH2O SUBSTREAM=MIXED  &
        VARIABLE=MASS-FLOW
    LIMITS "1" "50000"

DESIGN-SPEC QQUENCH
    DEFINE QQNCH BLOCK-VAR BLOCK=QUENCH VARIABLE=QCALC  &
        SENTENCE=PARAM
    SPEC "QQNCH" TO "0"
    TOL-SPEC "1."
    VARY STREAM-VAR STREAM=QNCH2O SUBSTREAM=MIXED  &
        VARIABLE=MASS-FLOW
    LIMITS "1" "20000"

DESIGN-SPEC QSCC
    DEFINE QSCC BLOCK-VAR BLOCK=SCC VARIABLE=QCALC  &
        SENTENCE=PARAM
    DEFINE Q2 BLOCK-VAR BLOCK=Q2 VARIABLE=QCALC SENTENCE=PARAM
    SPEC "QSCC" TO "0.05*Q2"
    TOL-SPEC "10."
    VARY STREAM-VAR STREAM=FUELMIX2 SUBSTREAM=MIXED  &
        VARIABLE=MASS-FLOW
    LIMITS "1" "100000"
```

```
DESIGN-SPEC SCRUBH2O
    DEFINE MASSAL STREAM-VAR STREAM=SCRUBBOT SUBSTREAM=CISOLID  &
        VARIABLE=MASS-FLOW
    DEFINE SCRUB STREAM-VAR STREAM=SCRUBH2O SUBSTREAM=MIXED  &
        VARIABLE=MASS-FLOW
    DEFINE NAOH STREAM-VAR STREAM=NAOH SUBSTREAM=MIXED  &
        VARIABLE=MASS-FLOW
    SPEC "SCRUB" TO "20*MASSAL"
    TOL-SPEC "0.01"
    VARY STREAM-VAR STREAM=SCRUBH2O SUBSTREAM=MIXED  &
        VARIABLE=MASS-FLOW
    LIMITS "NAOH" "5000"

DESIGN-SPEC SOILH2O
    DEFINE SLAG1 STREAM-VAR STREAM=SLAG SUBSTREAM=MIXED  &
        VARIABLE=MASS-FLOW
    DEFINE SLAG2 STREAM-VAR STREAM=SLAG SUBSTREAM=CISOLID  &
        VARIABLE=MASS-FLOW
    DEFINE SOIL STREAM-VAR STREAM=SOIL SUBSTREAM=MIXED  &
        VARIABLE=MASS-FLOW
    SPEC "30.*SOIL" TO "SLAG1+SLAG2"
    TOL-SPEC "0.01"
    VARY STREAM-VAR STREAM=SOIL SUBSTREAM=MIXED  &
        VARIABLE=MASS-FLOW
    LIMITS "1" "1000"

DESIGN-SPEC SOILSOL
    DEFINE SLAG1 STREAM-VAR STREAM=SLAG SUBSTREAM=MIXED  &
        VARIABLE=MASS-FLOW
    DEFINE SLAG2 STREAM-VAR STREAM=SLAG SUBSTREAM=CISOLID  &
        VARIABLE=MASS-FLOW
    DEFINE SOIL STREAM-VAR STREAM=SOIL SUBSTREAM=CISOLID  &
        VARIABLE=MASS-FLOW
    SPEC "3.33333*SOIL" TO "SLAG1+SLAG2"
    TOL-SPEC "0.01"
    VARY STREAM-VAR STREAM=SOIL SUBSTREAM=CISOLID  &
        VARIABLE=MASS-FLOW
    LIMITS "1" "1000"

CONV-OPTIONS
    PARAM TOL=0.01
    SECANT MAX-STEP-SIZ=.05 BRACKET=YES

STREAM-REPOR NOSORT MOLEFLOW MASSFLOW PROPERTIES=SET1 ALL-SUBS
```

System A-7

```
TITLE 'ITTS PHASE II - SLAGGING ROTARY KILN - MODEL SYSA7-4 (main)'

IN-UNITS ENG

DEF-STREAMS MIXCISLD ALL

DIAGNOSTICS
    TERMINAL SIM-LEVEL=8 CONV-LEVEL=8

SIM-OPTIONS MW-CALC=YES

RUN-CONTROL MAX-TIME=1800

DESCRIPTION "
        ACCEPTS COMBUSTIBLE AND NON-COMBUSTIBLE WASTE, AND METAL FOR MELTING.
        For MOD 2, SCRUBBER MODELED WITH RGIBBS RATHER THAN RADFRAC.
        MOD 3, REL 9, ADD SOIL DESIGN SPEC,  MOVE METAL INTO MAIN TREATMENT.
        "

DATABANKS COMBUST  / INORGANIC  / PURECOMP  / SOLIDS  /  &
        NOASPENPCD

PROP-SOURCES COMBUST  / INORGANIC  / PURECOMP  / SOLIDS

COMPONENTS
    H2 H2 H2 /
    O2 O2 O2 /
    N2 N2 N2 /
    CL2 CL2 CL2 /
    F2 F2 F2 /
    NO NO NO /
    SO2 O2S SO2 /
    H2O H2O H2O /
    CO2 CO2 CO2 /
    CO CO CO /
    HCL HCL HCL /
    CH4 CH4 CH4 /
    C-S C C-S /
    S-S S S-S /
    S S S /
    NAOH-S NAOH NAOH-S /
    NACL-S NACL NACL-S /
    NAF-S NAF NAF-S /
    AS AS AS /
    CD CD CD /
    HG HG HG /
    SE SE SE /
    FE FE FE /
    SIO2 SIO2 SIO2 /
    AL2O3 AL2O3 AL2O3 /
    FE-S FE FE-S /
    SIO2-S SIO2 SIO2-S /
    AL2O3-S AL2O3 AL2O3-S /
    AS-S AS AS-S /
    BA-S BA BA-S /
    CD-S CD CD-S /
    CR-S CR CR-S /
    PB-S PB PB-S /
    SE-S SE SE-S /
```

```
    AG-S AG AG-S /
    CACO3-S CACO3 CACO3-S /
    MGO-S MGO MGO-S /
    NA2O-S NA2O NA2O-S /
    K2O-S K2O K2O-S /
    FE3O4 FE3O4 FE3O4 /
    FE3O4-S FE3O4 FE3O4-S /
    CAO-S CAO CAO-S

FLOWSHEET
    BLOCK KILN IN=FDWASTEN SOIL FUELMIX1 FDWASTEC AIR  &
        AIRLEAKS FLYASH FDMETMLT OUT=OUT1
    BLOCK KILNSEP IN=KILNOUT OUT=SLAG KILNVAP
    BLOCK SCC IN=KILNVAP FUELMIX2 OUT=OUT2
    BLOCK BAGHOUSE IN=QUENCHED OUT=HGPLUS FLYASH QNCHVAP
    BLOCK QUENCH IN=SCCOUT QNCH2O OUT=QUENCHED
    BLOCK SCRUB IN=NAOH QNCHVAP SCRUBH2O OUT=SCRUBOUT
    BLOCK L-V-SEP IN=SCRUBOUT OUT=SCRUBVAP SCRUBBOT
    BLOCK DUPL1 IN=OUT1 OUT=KILNOUT DUM1IN
    BLOCK Q1 IN=DUM1IN OUT=DUM1OUT
    BLOCK DUPL2 IN=OUT2 OUT=SCCOUT DUM2IN
    BLOCK Q2 IN=DUM2IN OUT=DUM2OUT

PROPERTIES SOLIDS
    PROPERTIES IDEAL / RKS-BM

PROP-SET ALL-SUBS TEMP PRES VFRAC UNITS='ATM' SUBSTREAM=ALL

STREAM AIR
    SUBSTREAM MIXED TEMP=68 PRES=1 <ATM> MASS-FLOW=6107.183
    MASS-FLOW O2 0.233 / N2 0.767

STREAM AIRLEAKS
    SUBSTREAM MIXED TEMP=68 PRES=1 <ATM>  &
        VOLUME-FLOW=600 <CUFT/MIN>
    MASS-FLOW O2 0.233 / N2 0.767

STREAM FDMETMLT
    SUBSTREAM MIXED TEMP=68 PRES=1 <ATM> MASS-FLOW=1.20
    MASS-FLOW H2 2.42
    SUBSTREAM CISOLID TEMP=68 PRES=1 <ATM> MASS-FLOW=147.80
    MASS-FLOW C-S 14.44 / FE-S 282.02 / SIO2-S 0.035 /  &
        AL2O3-S 0.035 / BA-S 0.87 / CD-S 0.18

STREAM FDWASTEC
    SUBSTREAM MIXED TEMP=68 PRES=1 <ATM>
    MASS-FLOW H2 50.95 / O2 92.76 / N2 0.23 / CL2 53.02 /  &
        F2 0.11 / H2O 19.83
    SUBSTREAM CISOLID TEMP=68 PRES=1 <ATM>
    MASS-FLOW C-S 326.28 / S-S 0.49 / FE-S 7.67 / SIO2-S  &
        53.01 / AL2O3-S 53.01 / BA-S 0.77 / CD-S 0.77 / CR-S 1.53

STREAM FDWASTEN
    SUBSTREAM MIXED TEMP=68 PRES=1 <ATM>
    MASS-FLOW H2 0.54 / O2 1.44 / N2 0.01 / CL2 14.88 /  &
        NO 0.66 / SO2 0.83 / H2O 354.23 / HG 0.15
    SUBSTREAM CISOLID TEMP=68 PRES=1 <ATM>
    MASS-FLOW C-S 4.77 / S-S 0.62 / SIO2-S 476.77 /  &
        AL2O3-S 476.77 / AS-S 0.06 / BA-S 0.04 / CD-S 2.63  &
        / CR-S 4.95 / PB-S 0.17 / SE-S 0.03 / AG-S 0.03

STREAM FUELMIX1
```

```
    SUBSTREAM MIXED TEMP=68 PRES=1 <ATM> MASS-FLOW=12786.567
    MASS-FLOW O2 0.222 / N2 0.767 / CH4 0.046

STREAM FUELMIX2
    SUBSTREAM MIXED TEMP=68 PRES=1 <ATM> MASS-FLOW=4526.77
    MASS-FLOW O2 0.222 / N2 0.732 / CH4 0.046

STREAM NAOH
    SUBSTREAM MIXED TEMP=68 PRES=1 <ATM>
    SUBSTREAM CISOLID TEMP=68 PRES=1 <ATM> MASS-FLOW=77.611
    MASS-FLOW NAOH-S 1

STREAM OUT1
    SUBSTREAM MIXED TEMP=2500 PRES=1 <ATM>
    MASS-FLOW O2 1293 / N2 14610 / NO 27 / SO2 3 / H2O  &
        1977 / CO2 2598 / HCL 70 / FE3O4 45
    SUBSTREAM CISOLID TEMP=2500 PRES=1 <ATM>
    MASS-FLOW SIO2-S 1069 / AL2O3-S 739 / CR-S 8 / MGO-S  &
        18 / NA2O-S 10 / K2O-S 19 / CAO-S 56

STREAM QNCH2O
    SUBSTREAM MIXED TEMP=68 PRES=1 <ATM> MASS-FLOW=15424.714
    MASS-FLOW H2O 1

STREAM QUENCHED
    SUBSTREAM MIXED TEMP=350 PRES=1 <ATM>
    MASS-FLOW O2 1446 / N2 17490 / CL2 29 / H2O 16320 /  &
        CO2 3088 / HCL 40
    SUBSTREAM CISOLID TEMP=350 PRES=1 <ATM>
    MASS-FLOW SIO2-S 221 / AL2O3-S 148 / CD-S 3.3 / CR-S  &
        1.62 / MGO-S 3.6 / NA2O-S 2 / K2O-S 3.75 / FE3O4-S 9

STREAM SCRUBH2O
    SUBSTREAM MIXED TEMP=68 PRES=1 <ATM> MASS-FLOW=78
    MASS-FLOW H2O 1

STREAM SCRUBOUT
    SUBSTREAM MIXED TEMP=120 PRES=1 <ATM>
    MASS-FLOW O2 1452 / N2 17490 / H2O 373000 / CO2 3088
    SUBSTREAM CISOLID TEMP=120 PRES=1 <ATM>
    MASS-FLOW NACL-S 112

STREAM SOIL
    SUBSTREAM MIXED TEMP=68 PRES=1 <ATM> MASS-FLOW=56.359
    MASS-FLOW H2O 0.1
    SUBSTREAM CISOLID TEMP=68 PRES=1 <ATM> MASS-FLOW=507.231
    MASS-FLOW SIO2-S 0.569 / AL2O3-S 0.102 / CACO3-S 0.128 /  &
        MGO-S 0.023 / NA2O-S 0.013 / K2O-S 0.024 / FE3O4-S 0.041

BLOCK BAGHOUSE SEP
    FRAC STREAM=HGPLUS SUBSTREAM=MIXED COMPS=H2 O2 N2 CL2  &
        F2 NO SO2 H2O CO2 CO HCL CH4 C-S S-S S NAOH-S  &
        NACL-S NAF-S AS CD HG SE FE SIO2 AL2O3 FE-S SIO2-S  &
        AL2O3-S AS-S BA-S CD-S CR-S PB-S SE-S AG-S CACO3-S  &
        MGO-S NA2O-S K2O-S FE3O4 FE3O4-S CAO-S FRACS=0 0 0  &
        0 0 0 0 0 0 0 0 0 0 0 0 0 0 0 1 1 1 1 0 0  &
        0 0 0 0 1 0 1 0 0 1 0 0 0 0 0 0 0 0
    FRAC STREAM=HGPLUS SUBSTREAM=CISOLID COMPS=C-S S-S NAOH-S  &
        NACL-S NAF-S FE-S SIO2-S AL2O3-S AS-S BA-S CD-S CR-S  &
        PB-S SE-S AG-S CACO3-S MGO-S NA2O-S K2O-S FE3O4-S  &
        CAO-S FRACS=0 0 0 0 0 0 0 0 1 0 1 0 0 1 0 0 0 0 0 0 0
    FRAC STREAM=FLYASH SUBSTREAM=MIXED COMPS=H2 O2 N2 CL2  &
```

```
        F2 NO SO2 H2O CO2 CO HCL CH4 C-S S-S S NAOH-S  &
        NACL-S NAF-S AS CD HG SE FE SIO2 AL2O3 FE-S SIO2-S  &
        AL2O3-S AS-S BA-S CD-S CR-S PB-S SE-S AG-S CACO3-S  &
        MGO-S NA2O-S K2O-S FE3O4 FE3O4-S CAO-S FRACS=0 0 0  &
        0 0 0 0 0 0 0 0 0 1 1 1 1 1 1 0 0 0 0 1 1  &
        1 1 1 1 0 1 0 1 1 0 1 1 1 1 1 1 1 1
    FRAC STREAM=FLYASH SUBSTREAM=CISOLID COMPS=C-S S-S NAOH-S  &
        NACL-S NAF-S FE-S SIO2-S AL2O3-S AS-S BA-S CD-S CR-S  &
        PB-S SE-S AG-S CACO3-S MGO-S NA2O-S K2O-S FE3O4-S  &
        CAO-S FRACS=1 1 1 1 1 1 1 1 0 1 0 1 1 0 1 1 1 1 1 1 1

BLOCK KILNSEP SEP
    FRAC STREAM=SLAG SUBSTREAM=MIXED COMPS=H2 O2 N2 CL2 F2  &
        NO SO2 H2O CO2 CO HCL CH4 C-S S-S S NAOH-S NACL-S  &
        NAF-S AS CD HG SE FE SIO2 AL2O3 FE-S SIO2-S AL2O3-S  &
        AS-S BA-S CD-S CR-S PB-S SE-S AG-S CACO3-S MGO-S  &
        NA2O-S K2O-S FE3O4 FE3O4-S CAO-S FRACS=0 0 0 0 0 0  &
        0 0 0 0 0 0 .8 .8 0 .8 .8 .8 0 0 0 0 .8 .8  &
        .8 .8 .8 .8 .8 .8 .8 .8 .8 .8 .8 .8 .8 .8 .8 .8 .8 .8
    FRAC STREAM=SLAG SUBSTREAM=CISOLID COMPS=C-S S-S NAOH-S  &
        NACL-S NAF-S FE-S SIO2-S AL2O3-S AS-S BA-S CD-S CR-S  &
        PB-S SE-S AG-S CACO3-S MGO-S NA2O-S K2O-S FE3O4-S  &
        CAO-S FRACS=.8 .8 .8 .8 .8 .8 .8 .8 .8 .8 .8 .8  &
        .8 .8 .8 .8 .8 .8 .8 .8 .8

BLOCK L-V-SEP FLASH2
    PARAM TEMP=120 PRES=1 <ATM>

BLOCK KILN RGIBBS
    PARAM TEMP=2500 PRES=1 <ATM> NPHASE=2 MAXIT=500
    PROD H2 / O2 / N2 / CL2 / F2 / NO / SO2 / H2O /  &
        CO2 / CO / HCL / AS / CD / HG / SE / SIO2 /  &
        AL2O3 / FE-S SS / AS-S SS / BA-S SS / CD-S SS /  &
        CR-S SS / PB-S SS / SE-S SS / AG-S SS / MGO-S  &
        SS / NA2O-S SS / K2O-S SS / FE3O4-S SS / CAO-S SS
    PROD-FRAC FE-S 1 / FE3O4-S 1
    BLOCK-OPTION RESTART=NO

BLOCK Q1 RGIBBS
    PARAM TEMP=68 PRES=1 <ATM> NPHASE=2 TAPP=2432 MAXIT=500
    PROD H2 / O2 / N2 / CL2 / F2 / NO / SO2 / H2O /  &
        CO2 / CO / HCL / AS / CD / HG / SE / SIO2 /  &
        AL2O3 / FE-S SS / AS-S SS / BA-S SS / CD-S SS /  &
        CR-S SS / PB-S SS / SE-S SS / AG-S SS / MGO-S  &
        SS / NA2O-S SS / K2O-S SS / FE3O4-S SS / CAO-S SS
    PROD-FRAC FE-S 1 / FE3O4-S 1

BLOCK Q2 RGIBBS
    PARAM TEMP=68 PRES=1 <ATM> NPHASE=2 CHEMEQ=YES TAPP=2432  &
        MAXIT=60
    PROD H2 / O2 / N2 / CL2 / F2 / NO / SO2 / H2O /  &
        CO2 / CO / HCL / CH4 / S / AS / CD / HG / SE  &
        / SIO2 / AL2O3 / FE-S SS / BA-S SS / CR-S SS /  &
        PB-S SS / AG-S SS / MGO-S SS / NA2O-S SS / K2O-S  &
        SS / FE3O4-S SS / CAO-S SS
    PROD-FRAC FE-S 1 / FE3O4-S 1

BLOCK QUENCH RGIBBS
    PARAM TEMP=350 PRES=1 <ATM> NPHASE=2
    PROD H2 / O2 / N2 / CL2 / F2 / NO / SO2 / H2O /  &
        CO2 / CO / HCL / AS / CD / HG / SE / FE-S SS  &
        / SIO2-S SS / AL2O3-S SS / AS-S SS / BA-S SS /  &
```

```
        CD-S SS / CR-S SS / PB-S SS / SE-S SS / AG-S SS  &
        / MGO-S SS / NA2O-S SS / K2O-S SS / FE3O4-S SS /  &
        CAO-S SS
    PROD-FRAC FE-S 1 / FE3O4-S 1

BLOCK SCC RGIBBS
    PARAM TEMP=2500 PRES=1 <ATM> NPHASE=2
    PROD H2 / O2 / N2 / CL2 / F2 / NO / SO2 / H2O /  &
        CO2 / CO / HCL / CH4 / S / AS / CD / HG / SE  &
        / SIO2 / AL2O3 / FE-S SS / BA-S SS / CR-S SS /  &
        PB-S SS / AG-S SS / MGO-S SS / NA2O-S SS / K2O-S  &
        SS / FE3O4-S SS / CAO-S SS
    PROD-FRAC FE-S 1 / FE3O4-S 1

BLOCK SCRUB RGIBBS
    PARAM TEMP=120 PRES=1 <ATM> NPHASE=2 MAXIT=300
    PROD H2 / O2 / N2 / CL2 / F2 / NO / SO2 / H2O /  &
        CO2 / CO / HCL / NAOH-S SS / NACL-S SS / NAF-S SS

BLOCK DUPL1 DUPL

BLOCK DUPL2 DUPL

DESIGN-SPEC NAOH
    DEFINE CAUIN MASS-FLOW STREAM=NAOH SUBSTREAM=CISOLID  &
        COMPONENT=NAOH-S
    DEFINE CAUOUT MASS-FLOW STREAM=SCRUBOUT SUBSTREAM=CISOLID  &
        COMPONENT=NAOH-S
    SPEC "CAUIN-100.*CAUOUT" TO "0"
    TOL-SPEC "0.01"
    VARY STREAM-VAR STREAM=NAOH SUBSTREAM=CISOLID  &
        VARIABLE=MASS-FLOW
    LIMITS "1" "500 "

DESIGN-SPEC OXI
    DEFINE AIR MASS-FLOW STREAM=AIR SUBSTREAM=MIXED  &
        COMPONENT=O2
    DEFINE WC MASS-FLOW STREAM=FDWASTEC SUBSTREAM=MIXED  &
        COMPONENT=O2
    DEFINE WN MASS-FLOW STREAM=FDWASTEN SUBSTREAM=MIXED  &
        COMPONENT=O2
    DEFINE F1 MASS-FLOW STREAM=FUELMIX1 SUBSTREAM=MIXED  &
        COMPONENT=O2
    DEFINE OXOUT MASS-FLOW STREAM=KILNOUT SUBSTREAM=MIXED  &
        COMPONENT=O2
    DEFINE AL MASS-FLOW STREAM=AIRLEAKS SUBSTREAM=MIXED  &
        COMPONENT=O2
    SPEC "AL+AIR+WC+WN+(F1/6.0)" TO "2.0*OXOUT"
    TOL-SPEC ".1"
    VARY STREAM-VAR STREAM=AIR SUBSTREAM=MIXED  &
        VARIABLE=MASS-FLOW
    LIMITS "1" "10000"

DESIGN-SPEC QKILN
    DEFINE QKILN BLOCK-VAR BLOCK=KILN VARIABLE=QCALC  &
        SENTENCE=PARAM
    DEFINE Q1 BLOCK-VAR BLOCK=Q1 VARIABLE=QCALC SENTENCE=PARAM
    SPEC "QKILN" TO "0.05*Q1"
    TOL-SPEC "1.  "
    VARY STREAM-VAR STREAM=FUELMIX1 SUBSTREAM=MIXED  &
        VARIABLE=MASS-FLOW
    LIMITS "1" "50000"
```

```
DESIGN-SPEC QQUENCH
    DEFINE QQNCH BLOCK-VAR BLOCK=QUENCH VARIABLE=QCALC  &
        SENTENCE=PARAM
    SPEC "QQNCH" TO "0"
    TOL-SPEC "1."
    VARY STREAM-VAR STREAM=QNCH2O SUBSTREAM=MIXED  &
        VARIABLE=MASS-FLOW
    LIMITS "1" "20000"

DESIGN-SPEC QSCC
    DEFINE QSCC BLOCK-VAR BLOCK=SCC VARIABLE=QCALC  &
        SENTENCE=PARAM
    DEFINE Q2 BLOCK-VAR BLOCK=Q2 VARIABLE=QCALC SENTENCE=PARAM
    SPEC "QSCC" TO "0.05*Q2"
    TOL-SPEC "10."
    VARY STREAM-VAR STREAM=FUELMIX2 SUBSTREAM=MIXED  &
        VARIABLE=MASS-FLOW
    LIMITS "1" "10000"

DESIGN-SPEC SCRUBH2O
    DEFINE MASSAL STREAM-VAR STREAM=SCRUBBOT SUBSTREAM=CISOLID  &
        VARIABLE=MASS-FLOW
    DEFINE SCRUB STREAM-VAR STREAM=SCRUBH2O SUBSTREAM=MIXED  &
        VARIABLE=MASS-FLOW
    DEFINE NAOH STREAM-VAR STREAM=NAOH SUBSTREAM=CISOLID  &
        VARIABLE=MASS-FLOW
    SPEC "SCRUB" TO "20*MASSAL"
    TOL-SPEC "0.01"
    VARY STREAM-VAR STREAM=SCRUBH2O SUBSTREAM=MIXED  &
        VARIABLE=MASS-FLOW
    LIMITS "NAOH" "5000"

DESIGN-SPEC SOILH2O
    DEFINE SLAG1 STREAM-VAR STREAM=SLAG SUBSTREAM=MIXED  &
        VARIABLE=MASS-FLOW
    DEFINE SLAG2 STREAM-VAR STREAM=SLAG SUBSTREAM=CISOLID  &
        VARIABLE=MASS-FLOW
    DEFINE SOIL STREAM-VAR STREAM=SOIL SUBSTREAM=MIXED  &
        VARIABLE=MASS-FLOW
    SPEC "30.*SOIL" TO "SLAG1+SLAG2"
    TOL-SPEC "0.01"
    VARY STREAM-VAR STREAM=SOIL SUBSTREAM=MIXED  &
        VARIABLE=MASS-FLOW
    LIMITS "1" "1000"

DESIGN-SPEC SOILSOL
    DEFINE SLAG1 STREAM-VAR STREAM=SLAG SUBSTREAM=MIXED  &
        VARIABLE=MASS-FLOW
    DEFINE SLAG2 STREAM-VAR STREAM=SLAG SUBSTREAM=CISOLID  &
        VARIABLE=MASS-FLOW
    DEFINE SOIL STREAM-VAR STREAM=SOIL SUBSTREAM=CISOLID  &
        VARIABLE=MASS-FLOW
    SPEC "3.33333*SOIL" TO "SLAG1+SLAG2"
    TOL-SPEC "0.01"
    VARY STREAM-VAR STREAM=SOIL SUBSTREAM=CISOLID  &
        VARIABLE=MASS-FLOW
    LIMITS "1" "1000"

CONV-OPTIONS
    SECANT MAX-STEP-SIZ=.05 BRACKET=YES

CONVERGENCE BROQKILN BROYDEN
```

```
    SPEC QKILN

STREAM-REPOR NOSORT MOLEFLOW MASSFLOW PROPERTIES=SET1 ALL-SUBS
```

System B-1

```
TITLE 'ITTS PHASE I - PYROLYSIS - MODEL SYSB1-4 (main)'

IN-UNITS ENG

DEF-STREAMS MIXCISLD ALL

DIAGNOSTICS
    TERMINAL SIM-LEVEL=8 CONV-LEVEL=8

SIM-OPTIONS MW-CALC=YES

RUN-CONTROL MAX-TIME=1800

DATABANKS COMBUST  / INORGANIC  / PURECOMP  / SOLIDS  /  &
        NOASPENPCD

PROP-SOURCES COMBUST  / INORGANIC  / PURECOMP  / SOLIDS

COMPONENTS
    H2 H2 H2 /
    O2 O2 O2 /
    N2 N2 N2 /
    CL2 CL2 CL2 /
    F2 F2 F2 /
    NO NO NO /
    SO2 O2S SO2 /
    H2O H2O H2O /
    CO2 CO2 CO2 /
    CO CO CO /
    HCL HCL HCL /
    CH4 CH4 CH4 /
    C-S C C-S /
    S-S S S-S /
    S S S /
    NAOH-S NAOH NAOH-S /
    NACL-S NACL NACL-S /
    NAF-S NAF NAF-S /
    AS AS AS /
    CD CD CD /
    HG HG HG /
    SE SE SE /
    FE FE FE /
    SIO2 SIO2 SIO2 /
    AL2O3 AL2O3 AL2O3 /
    FE-S FE FE-S /
    SIO2-S SIO2 SIO2-S /
    AL2O3-S AL2O3 AL2O3-S /
    AS-S AS AS-S /
    BA-S BA BA-S /
    CD-S CD CD-S /
    CR-S CR CR-S /
    PB-S PB PB-S /
    SE-S SE SE-S /
    AG-S AG AG-S /
    CACO3-S CACO3 CACO3-S /
    MGO-S MGO MGO-S /
    NA2O-S NA2O NA2O-S /
    K2O-S K2O K2O-S /
    FE3O4 FE3O4 FE3O4 /
```

```
    FE3O4-S FE3O4 FE3O4-S /
    CAO-S CAO CAO-S

FLOWSHEET
    BLOCK PYRO-SEP IN=PYROOUT OUT=PYROVAP ASH
    BLOCK BAGHOUSE IN=QUENCHED OUT=HGPLUS FLYASH QNCHVAP
    BLOCK QUENCH IN=SCCOUT QNCH2O OUT=QUENCHED
    BLOCK L-V-SEP IN=SCRUBOUT OUT=SCRUBVAP SCRUBBOT
    BLOCK VITRIFY IN=FLYASH ASH FDWASTEN SOIL O2-VIT OUT= &
        VITOUT
    BLOCK VIT-SEP IN=VITOUT OUT=VITVAP SLAG
    BLOCK PYROLYZR IN=AIRLEAKS FDWASTEC OXYGEN OUT=PYROOUT
    BLOCK SCC IN=PYROVAP VITVAP O2-SCC OUT=SCCOUT
    BLOCK SCRUB IN=SCRUBH2O NAOH QNCHVAP OUT=SCRUBOUT
    BLOCK MELTER IN=FDMETMLT OUT=METAL

PROPERTIES SOLIDS
    PROPERTIES IDEAL / RKS-BM

PROP-SET ALL-SUBS TEMP PRES VFRAC UNITS='ATM' SUBSTREAM=ALL

STREAM AIRLEAKS
    SUBSTREAM MIXED TEMP=68 PRES=1 <ATM> MASS-FLOW=224
    MASS-FRAC O2 0.233 / N2 0.767

STREAM FDMETMLT
    SUBSTREAM MIXED TEMP=68 PRES=1 <ATM> MASS-FLOW=1.20
    MASS-FLOW H2 2.42
    SUBSTREAM CISOLID TEMP=68 PRES=1 <ATM> MASS-FLOW=147.80
    MASS-FLOW C-S 14.44 / FE-S 282.02 / SIO2-S 0.035 /  &
        AL2O3-S 0.035 / BA-S 0.87 / CD-S 0.18

STREAM FDWASTEC
    SUBSTREAM MIXED TEMP=68 PRES=1 <ATM>
    MASS-FLOW H2 50.95 / O2 92.76 / N2 0.23 / CL2 53.02 /  &
        F2 0.11 / H2O 19.83
    SUBSTREAM CISOLID TEMP=68 PRES=1 <ATM>
    MASS-FLOW C-S 326.28 / S-S 0.49 / FE-S 7.67 / SIO2-S  &
        53.01 / AL2O3-S 53.01 / BA-S 0.77 / CD-S 0.77 / CR-S 1.53

STREAM FDWASTEN
    SUBSTREAM MIXED TEMP=68 PRES=1 <ATM>
    MASS-FLOW H2 0.54 / O2 1.44 / N2 0.01 / CL2 14.88 /  &
        NO 0.66 / SO2 0.83 / H2O 354.23 / HG 0.15
    SUBSTREAM CISOLID TEMP=68 PRES=1 <ATM>
    MASS-FLOW C-S 4.77 / S-S 0.62 / SIO2-S 476.77 /  &
        AL2O3-S 476.77 / AS-S 0.06 / BA-S 0.04 / CD-S 2.63  &
        / CR-S 4.95 / PB-S 0.17 / SE-S 0.03 / AG-S 0.03

STREAM NAOH
    SUBSTREAM MIXED TEMP=68 PRES=1 <ATM>
    SUBSTREAM CISOLID TEMP=68 PRES=1 <ATM> MASS-FLOW=77.611
    MASS-FRAC NAOH-S 1

STREAM O2-SCC
    SUBSTREAM MIXED TEMP=68 PRES=1 <ATM> MASS-FLOW=833.774
    MASS-FRAC O2 1

STREAM O2-VIT
    SUBSTREAM MIXED TEMP=68 PRES=1 <ATM> MASS-FLOW=22.936
    MASS-FRAC O2 1
```

```
STREAM OXYGEN
    SUBSTREAM MIXED TEMP=68 PRES=1 <ATM> MASS-FLOW=289.513
    MASS-FRAC O2 1

STREAM QNCH2O
    SUBSTREAM MIXED TEMP=68 PRES=1 <ATM> MASS-FLOW=1410.762
    MASS-FRAC H2O 1

STREAM SCRUBH2O
    SUBSTREAM MIXED TEMP=68 PRES=1 <ATM> MASS-FLOW=78
    MASS-FLOW H2O 1

STREAM SCRUBOUT
    SUBSTREAM MIXED TEMP=120 PRES=1 <ATM>
    MASS-FLOW O2 1452 / N2 17490 / H2O 373000 / CO2 3088
    SUBSTREAM CISOLID TEMP=120 PRES=1 <ATM>
    MASS-FLOW NACL-S 112

STREAM SOIL
    SUBSTREAM MIXED TEMP=68 PRES=1 <ATM> MASS-FLOW=49.8413
    MASS-FLOW H2O 0.1
    SUBSTREAM CISOLID TEMP=68 PRES=1 <ATM> MASS-FLOW=448.572
    MASS-FLOW SIO2-S 0.569 / AL2O3-S 0.102 / CACO3-S 0.128 /  &
       MGO-S 0.023 / NA2O-S 0.013 / K2O-S 0.024 / FE3O4-S 0.041

BLOCK BAGHOUSE SEP
    FRAC STREAM=HGPLUS SUBSTREAM=MIXED COMPS=H2 O2 N2 CL2  &
        F2 NO SO2 H2O CO2 CO HCL CH4 C-S S-S S NAOH-S  &
        NACL-S NAF-S AS CD HG SE FE SIO2 AL2O3 FE-S SIO2-S  &
        AL2O3-S AS-S BA-S CD-S CR-S PB-S SE-S AG-S CACO3-S  &
        MGO-S NA2O-S K2O-S FE3O4 FE3O4-S CAO-S FRACS=0 0 0  &
        0 0 0 0 0 0 0 0 0 0 0 0 0 0 0 1 1 1 1 0 0  &
        0 0 0 0 1 0 1 0 0 1 0 0 0 0 0 0 0 0
    FRAC STREAM=HGPLUS SUBSTREAM=CISOLID COMPS=C-S S-S NAOH-S  &
        NACL-S NAF-S FE-S SIO2-S AL2O3-S AS-S BA-S CD-S CR-S  &
        PB-S SE-S AG-S CACO3-S MGO-S NA2O-S K2O-S FE3O4-S  &
        CAO-S FRACS=0 0 0 0 0 0 0 0 1 0 1 0 0 1 0 0 0 0 0 0 0
    FRAC STREAM=FLYASH SUBSTREAM=MIXED COMPS=H2 O2 N2 CL2  &
        F2 NO SO2 H2O CO2 CO HCL CH4 C-S S-S S NAOH-S  &
        NACL-S NAF-S AS CD HG SE FE SIO2 AL2O3 FE-S SIO2-S  &
        AL2O3-S AS-S BA-S CD-S CR-S PB-S SE-S AG-S CACO3-S  &
        MGO-S NA2O-S K2O-S FE3O4 FE3O4-S CAO-S FRACS=0 0 0  &
        0 0 0 0 0 0 0 0 0 1 1 1 1 1 1 0 0 0 0 1 1  &
        1 1 1 1 0 1 0 1 1 0 1 1 1 1 1 1 1 1
    FRAC STREAM=FLYASH SUBSTREAM=CISOLID COMPS=C-S S-S NAOH-S  &
        NACL-S NAF-S FE-S SIO2-S AL2O3-S AS-S BA-S CD-S CR-S  &
        PB-S SE-S AG-S CACO3-S MGO-S NA2O-S K2O-S FE3O4-S  &
        CAO-S FRACS=1 1 1 1 1 1 1 1 0 1 0 1 1 0 1 1 1 1 1 1 1
    FLASH-SPECS FLYASH TEMP=68 PRES=1 <ATM> NPHASE=1

BLOCK PYRO-SEP SEP
    FRAC STREAM=ASH SUBSTREAM=MIXED COMPS=H2 O2 N2 CL2 F2  &
        NO SO2 H2O CO2 CO HCL CH4 C-S S-S S NAOH-S NACL-S  &
        NAF-S AS CD HG SE FE SIO2 AL2O3 FE-S SIO2-S AL2O3-S  &
        AS-S BA-S CD-S CR-S PB-S SE-S AG-S CACO3-S MGO-S  &
        NA2O-S K2O-S FE3O4 FE3O4-S CAO-S FRACS=0 0 0 0 0 0  &
        0 0 0 0 0 0 .8 .8 0 .8 .8 .8 0 0 0 0 .8 .8  &
        .8 .8 .8 .8 .8 .8 .8 .8 .8 .8 .8 .8 .8 .8 .8 .8 .8 .8
    FRAC STREAM=ASH SUBSTREAM=CISOLID COMPS=C-S S-S NAOH-S  &
        NACL-S NAF-S FE-S SIO2-S AL2O3-S AS-S BA-S CD-S CR-S  &
        PB-S SE-S AG-S CACO3-S MGO-S NA2O-S K2O-S FE3O4-S  &
        CAO-S FRACS=.8 .8 .8 .8 .8 .8 .8 .8 .8 .8 .8 .8  &
```

```
        .8 .8 .8 .8 .8 .8 .8 .8 .8
    FLASH-SPECS ASH TEMP=68 PRES=1 <ATM>

BLOCK VIT-SEP SEP
    FRAC STREAM=VITVAP SUBSTREAM=MIXED COMPS=H2 O2 N2 CL2  &
        F2 NO SO2 H2O CO2 CO HCL CH4 C-S S-S S NAOH-S  &
        NACL-S NAF-S AS CD HG SE FE SIO2 AL2O3 FE-S SIO2-S  &
        AL2O3-S AS-S BA-S CD-S CR-S PB-S SE-S AG-S CACO3-S  &
        MGO-S NA2O-S K2O-S FE3O4 FE3O4-S CAO-S FRACS=1 1 1  &
        1 1 1 1 1 1 1 1 1 0 0 0 0 0 0 1 1 1 1 0 0  &
        0 0 0 0 0 0 0 0 0 0 0 0 0 0 0 0 0 0
    FRAC STREAM=VITVAP SUBSTREAM=CISOLID COMPS=C-S S-S NAOH-S  &
        NACL-S NAF-S FE-S SIO2-S AL2O3-S AS-S BA-S CD-S CR-S  &
        PB-S SE-S AG-S CACO3-S MGO-S NA2O-S K2O-S FE3O4-S  &
        CAO-S FRACS=0 0 0 0 0 0 0 0 0 0 0 0 0 0 0 0 0 0 0 0 0

BLOCK L-V-SEP FLASH2
    PARAM TEMP=120 PRES=1 <ATM>

BLOCK PYROLYZR RSTOIC
    PARAM TEMP=1200 PRES=1 <ATM>
    STOIC 1 CISOLID C-S -1 / MIXED O2 -0.5 / CO 1
    CONV 1 CISOLID C-S 0.99

BLOCK MELTER RGIBBS
    PARAM TEMP=3000 PRES=1 <ATM> NPHASE=2
    PROD H2 / C-S SS / FE / SIO2 / AL2O3 / FE-S SS /  &
        SIO2-S SS / AL2O3-S SS / BA-S SS / CD / CD-S SS

BLOCK QUENCH RGIBBS
    PARAM TEMP=350 PRES=1 <ATM> NPHASE=2 MAXIT=100
    PROD H2 / O2 / N2 / F2 / NO / SO2 / H2O / CO2 /  &
        CO / HCL / AS / CD / HG / SE / FE-S SS /  &
        SIO2-S SS / AL2O3-S SS / AS-S SS / BA-S SS /  &
        CD-S SS / CR-S SS / PB-S SS / SE-S SS / AG-S SS  &
        / MGO-S SS / NA2O-S SS / K2O-S SS / CAO-S SS
    BLOCK-OPTION RESTART=NO

BLOCK SCC RGIBBS
    PARAM TEMP=2200 PRES=1 <ATM> NPHASE=2
    PROD H2 / O2 / N2 / CL2 / F2 / NO / SO2 / H2O /  &
        CO2 / CO / HCL / CH4 / S / AS / CD / HG / SE  &
        / FE-S SS / SIO2-S SS / AL2O3-S SS / BA-S SS /  &
        CR-S SS / PB-S SS / AG-S SS / MGO-S SS / NA2O-S  &
        SS / K2O-S SS / CAO-S SS
    BLOCK-OPTION RESTART=NO

BLOCK SCRUB RGIBBS
    PARAM TEMP=120 PRES=1 <ATM> NPHASE=2
    PROD H2 / O2 / N2 / CL2 / F2 / NO / SO2 / H2O /  &
        CO2 / CO / HCL / NAOH-S SS / NACL-S SS / NAF-S SS

BLOCK VITRIFY RGIBBS
    PARAM TEMP=3000 PRES=1 <ATM> NPHASE=2 MAXIT=500 TOL=0.00001
    PROD H2 / O2 / N2 / CL2 / F2 / NO / SO2 / H2O /  &
        CO2 / CO / HCL / C-S SS / S / AS / CD / HG /  &
        SE / FE-S SS / SIO2 / AL2O3 / AS-S SS / BA-S SS  &
        / CD-S SS / CR-S SS / PB-S SS / SE-S SS / AG-S  &
        SS / MGO-S SS / NA2O-S SS / K2O-S SS / FE3O4-S  &
        SS / CAO-S SS
    PROD-FRAC FE-S 1 / FE3O4-S 1
    BLOCK-OPTION RESTART=NO
```

```
DESIGN-SPEC NAOH
    DEFINE CAUIN MASS-FLOW STREAM=NAOH SUBSTREAM=CISOLID  &
        COMPONENT=NAOH-S
    DEFINE CAUOUT MASS-FLOW STREAM=SCRUBOUT SUBSTREAM=CISOLID  &
        COMPONENT=NAOH-S
    SPEC "CAUIN-100.*CAUOUT" TO "0."
    TOL-SPEC "0.01"
    VARY STREAM-VAR STREAM=NAOH SUBSTREAM=CISOLID  &
        VARIABLE=MASS-FLOW
    LIMITS "1 " "1000  "

DESIGN-SPEC O2-SCC
    DEFINE OXIN1 MASS-FLOW STREAM=O2-SCC SUBSTREAM=MIXED  &
        COMPONENT=O2
    DEFINE OXIN2 MASS-FLOW STREAM=VITVAP SUBSTREAM=MIXED  &
        COMPONENT=O2
    DEFINE OXIN3 MASS-FLOW STREAM=PYROVAP SUBSTREAM=MIXED  &
        COMPONENT=O2
    DEFINE OXOUT MASS-FLOW STREAM=SCCOUT SUBSTREAM=MIXED  &
        COMPONENT=O2
    SPEC "OXIN1+OXIN2+OXIN3" TO "51.0*OXOUT"
    TOL-SPEC "0.001"
    VARY STREAM-VAR STREAM=O2-SCC SUBSTREAM=MIXED  &
        VARIABLE=MASS-FLOW
    LIMITS "1" "100000"

DESIGN-SPEC O2-VIT
    DEFINE OXIN1 MASS-FLOW STREAM=O2-VIT SUBSTREAM=MIXED  &
        COMPONENT=O2
    DEFINE OXIN2 MASS-FLOW STREAM=FDWASTEN SUBSTREAM=MIXED  &
        COMPONENT=O2
    DEFINE OXIN3 MASS-FLOW STREAM=SOIL SUBSTREAM=MIXED  &
        COMPONENT=O2
    DEFINE OXOUT MASS-FLOW STREAM=VITOUT SUBSTREAM=MIXED  &
        COMPONENT=O2
    SPEC "OXIN1+OXIN2+OXIN3" TO "6.*OXOUT"
    TOL-SPEC "0.01"
    VARY STREAM-VAR STREAM=O2-VIT SUBSTREAM=MIXED  &
        VARIABLE=MASS-FLOW
    LIMITS "1" "1000"

DESIGN-SPEC OXYGEN
    DEFINE OXOUT MOLE-FLOW STREAM=PYROOUT SUBSTREAM=MIXED  &
        COMPONENT=O2
    DEFINE COUT MOLE-FLOW STREAM=PYROOUT SUBSTREAM=CISOLID  &
        COMPONENT=C-S
    SPEC "COUT-2.0*OXOUT" TO "0.01"
    TOL-SPEC "0.001"
    VARY STREAM-VAR STREAM=OXYGEN SUBSTREAM=MIXED  &
        VARIABLE=MASS-FLOW
    LIMITS "1" "1000"

DESIGN-SPEC QQUENCH
    DEFINE QQNCH BLOCK-VAR BLOCK=QUENCH VARIABLE=QCALC  &
        SENTENCE=PARAM
    SPEC "QQNCH" TO "0"
    TOL-SPEC "0.10"
    VARY STREAM-VAR STREAM=QNCH2O SUBSTREAM=MIXED  &
        VARIABLE=MASS-FLOW
    LIMITS "1" "90000"

DESIGN-SPEC SCRUBH2O
```

```
    DEFINE MASSAL STREAM-VAR STREAM=SCRUBBOT SUBSTREAM=CISOLID  &
        VARIABLE=MASS-FLOW
    DEFINE SCRUB STREAM-VAR STREAM=SCRUBH2O SUBSTREAM=MIXED  &
        VARIABLE=MASS-FLOW
    DEFINE NAOH STREAM-VAR STREAM=NAOH SUBSTREAM=CISOLID  &
        VARIABLE=MASS-FLOW
    SPEC "SCRUB" TO "20*MASSAL"
    TOL-SPEC "0.01"
    VARY STREAM-VAR STREAM=SCRUBH2O SUBSTREAM=MIXED  &
        VARIABLE=MASS-FLOW
    LIMITS "NAOH" "5000"

DESIGN-SPEC SOILH2O
    DEFINE SLAG1 STREAM-VAR STREAM=SLAG SUBSTREAM=MIXED  &
        VARIABLE=MASS-FLOW
    DEFINE SLAG2 STREAM-VAR STREAM=SLAG SUBSTREAM=CISOLID  &
        VARIABLE=MASS-FLOW
    DEFINE SOIL STREAM-VAR STREAM=SOIL SUBSTREAM=MIXED  &
        VARIABLE=MASS-FLOW
    SPEC "30.*SOIL" TO "SLAG1+SLAG2"
    TOL-SPEC "0.01"
    VARY STREAM-VAR STREAM=SOIL SUBSTREAM=MIXED  &
        VARIABLE=MASS-FLOW
    LIMITS "1" "1000"

DESIGN-SPEC SOILSOL
    DEFINE SLAG1 STREAM-VAR STREAM=SLAG SUBSTREAM=MIXED  &
        VARIABLE=MASS-FLOW
    DEFINE SLAG2 STREAM-VAR STREAM=SLAG SUBSTREAM=CISOLID  &
        VARIABLE=MASS-FLOW
    DEFINE SOIL STREAM-VAR STREAM=SOIL SUBSTREAM=CISOLID  &
        VARIABLE=MASS-FLOW
    SPEC "3.33333*SOIL" TO "SLAG1+SLAG2"
    TOL-SPEC "0.01"
    VARY STREAM-VAR STREAM=SOIL SUBSTREAM=CISOLID  &
        VARIABLE=MASS-FLOW
    LIMITS "1" "1000"

CONV-OPTIONS
    PARAM TOL=0.001 SPEC-METHOD=BROYDEN
    WEGSTEIN MAXIT=500
    SECANT MAXIT=300 MAX-STEP-SIZ=.05 BRACKET=YES

CONVERGENCE C-1 SECANT
    SPEC NAOH 0.01

CONVERGENCE BROY2 BROYDEN
    SPEC SOILH2O / SOILSOL

CONVERGENCE NEWTOXI NEWTON
    SPEC O2-VIT

STREAM-REPOR NOSORT MOLEFLOW MASSFLOW PROPERTIES=ALL-SUBS
```

System C-1

```
TITLE 'ITTS PHASE I - PLASMA FURNACE - MODEL SYSC1-4 (main)'

IN-UNITS ENG

DEF-STREAMS MIXCISLD ALL

DIAGNOSTICS
    TERMINAL SIM-LEVEL=8 CONV-LEVEL=8

RUN-CONTROL MAX-TIME=1800

DATABANKS COMBUST  / INORGANIC  / PURECOMP  / SOLIDS  /  &
        NOASPENPCD

PROP-SOURCES COMBUST  / INORGANIC  / PURECOMP  / SOLIDS

COMPONENTS
    H2 H2 H2 /
    O2 O2 O2 /
    N2 N2 N2 /
    CL2 CL2 CL2 /
    F2 F2 F2 /
    NO NO NO /
    SO2 O2S SO2 /
    H2O H2O H2O /
    CO2 CO2 CO2 /
    CO CO CO /
    HCL HCL HCL /
    CH4 CH4 CH4 /
    C-S C C-S /
    S-S S S-S /
    S S S /
    NAOH-S NAOH NAOH-S /
    NACL-S NACL NACL-S /
    NAF-S NAF NAF-S /
    AS AS AS /
    CD CD CD /
    HG HG HG /
    SE SE SE /
    FE FE FE /
    SIO2 SIO2 SIO2 /
    AL2O3 AL2O3 AL2O3 /
    FE-S FE FE-S /
    SIO2-S SIO2 SIO2-S /
    AL2O3-S AL2O3 AL2O3-S /
    AS-S AS AS-S /
    BA-S BA BA-S /
    CD-S CD CD-S /
    CR-S CR CR-S /
    PB-S PB PB-S /
    SE-S SE SE-S /
    AG-S AG AG-S /
    CACO3-S CACO3 CACO3-S /
    MGO-S MGO MGO-S /
    NA2O-S NA2O NA2O-S /
    K2O-S K2O K2O-S /
    FE3O4 FE3O4 FE3O4 /
    FE3O4-S FE3O4 FE3O4-S /
    CAO-S CAO CAO-S
```

```
FLOWSHEET
    BLOCK PLASMA IN=SOLIDS OUT=PLASOUT
    BLOCK PLAS-SEP IN=PLASOUT OUT=METAL PLASVAP SLAG
    BLOCK SCC IN=AIR2 EFFLUENT OUT=SCCOUT
    BLOCK BAGHOUSE IN=QUENCHED OUT=QNCHVAP HGPLUS FLYASH
    BLOCK L-V-SEP IN=SCRUBOUT OUT=SCRUBVAP SCRUBBOT
    BLOCK SCRUB IN=QNCHVAP SCRUBH2O NAOH OUT=SCRUBOUT
    BLOCK QUENCH IN=SCCOUT QNCH2O OUT=QUENCHED
    BLOCK FEED-SEP IN=SOIL FDWASTEC FDWASTEN FDMETMLT FLYASH  &
        OUT=SOLIDS ORGANICS
    BLOCK PLENUM IN=ORGANICS AIR PLASVAP OUT=EFFLUENT

PROPERTIES SOLIDS
    PROPERTIES IDEAL / RKS-BM

PROP-SET ALL-SUBS TEMP PRES VFRAC UNITS='ATM' SUBSTREAM=ALL

STREAM AIR
    SUBSTREAM MIXED TEMP=68 PRES=1 <ATM> MASS-FLOW=6238.97
    MASS-FRAC O2 0.233 / N2 0.767

STREAM AIR2
    SUBSTREAM MIXED TEMP=68 PRES=1 <ATM> MASS-FLOW=1.001
    MASS-FRAC O2 0.233 / N2 0.767

STREAM FDMETMLT
    SUBSTREAM MIXED TEMP=68 PRES=1 <ATM> MASS-FLOW=1.20
    MASS-FLOW H2 2.42
    SUBSTREAM CISOLID TEMP=68 PRES=1 <ATM> MASS-FLOW=147.80
    MASS-FLOW C-S 14.44 / FE-S 282.02 / SIO2-S 0.035 /  &
        AL2O3-S 0.035 / BA-S 0.87 / CD-S 0.18

STREAM FDWASTEC
    SUBSTREAM MIXED TEMP=68 PRES=1 <ATM>
    MASS-FLOW H2 50.95 / O2 92.76 / N2 0.23 / CL2 53.02 /  &
        F2 0.11 / H2O 19.83
    SUBSTREAM CISOLID TEMP=68 PRES=1 <ATM>
    MASS-FLOW C-S 326.28 / S-S 0.49 / FE-S 7.67 / SIO2-S  &
        53.01 / AL2O3-S 53.01 / BA-S 0.77 / CD-S 0.77 / CR-S 1.53

STREAM FDWASTEN
    SUBSTREAM MIXED TEMP=68 PRES=1 <ATM>
    MASS-FLOW H2 0.54 / O2 1.44 / N2 0.01 / CL2 14.88 /  &
        NO 0.66 / SO2 0.83 / H2O 354.23 / HG 0.15
    SUBSTREAM CISOLID TEMP=68 PRES=1 <ATM>
    MASS-FLOW C-S 4.77 / S-S 0.62 / SIO2-S 476.77 /  &
        AL2O3-S 476.77 / AS-S 0.06 / BA-S 0.04 / CD-S 2.63  &
        / CR-S 4.95 / PB-S 0.17 / SE-S 0.03 / AG-S 0.03

STREAM NAOH
    SUBSTREAM CISOLID TEMP=68 PRES=1 <ATM> MASS-FLOW=77.611
    MASS-FRAC NAOH-S 1

STREAM PLASOUT
    SUBSTREAM MIXED TEMP=3000 PRES=1 <ATM>
    MASS-FLOW H2 51 / N2 4 / CL2 53 / H2O 375 / CO 784  &
        / FE 148 / SIO2 1012 / AL2O3 725
    SUBSTREAM CISOLID TEMP=3000 PRES=1 <ATM>
    MASS-FLOW C-S 0 / S-S 0 / SIO2-S 1

STREAM QNCH2O
    SUBSTREAM MIXED TEMP=68 PRES=1 <ATM> MASS-FLOW=3548.898
```

```
    MASS-FLOW H2O 1

STREAM SCRUBH2O
    SUBSTREAM MIXED TEMP=68 PRES=1 <ATM> MASS-FLOW=1
    MASS-FRAC H2O 1

STREAM SOIL
    SUBSTREAM MIXED TEMP=68 PRES=1 <ATM> MASS-FLOW=48.1832
    MASS-FLOW H2O .100
    SUBSTREAM CISOLID TEMP=68 PRES=1 <ATM> MASS-FLOW=433.65
    MASS-FLOW SIO2-S 0.569 / AL2O3-S 0.102 / CACO3-S 0.128 /  &
        MGO-S 0.023 / NA2O-S 0.013 / K2O-S 0.024 / FE3O4-S  &
        0.041

BLOCK BAGHOUSE SEP
    FRAC STREAM=HGPLUS SUBSTREAM=MIXED COMPS=H2 O2 N2 CL2  &
        F2 NO SO2 H2O CO2 CO HCL CH4 C-S S-S S NAOH-S  &
        NACL-S NAF-S AS CD HG SE FE SIO2 AL2O3 FE-S SIO2-S  &
        AL2O3-S AS-S BA-S CD-S CR-S PB-S SE-S AG-S CACO3-S  &
        MGO-S NA2O-S K2O-S FE3O4 FE3O4-S CAO-S FRACS=0 0 0  &
        0 0 0 0 0 0 0 0 0 0 0 0 0 0 0 1 1 1 1 0 0  &
        0 0 0 0 1 0 1 0 0 1 0 0 0 0 0 0 0 0
    FRAC STREAM=HGPLUS SUBSTREAM=CISOLID COMPS=C-S S-S NAOH-S  &
        NACL-S NAF-S FE-S SIO2-S AL2O3-S AS-S BA-S CD-S CR-S  &
        PB-S SE-S AG-S CACO3-S MGO-S NA2O-S K2O-S FE3O4-S  &
        CAO-S FRACS=0 0 0 0 0 0 0 0 1 0 1 0 0 1 0 0 0 0 0 0 0
    FRAC STREAM=FLYASH SUBSTREAM=MIXED COMPS=H2 O2 N2 CL2  &
        F2 NO SO2 H2O CO2 CO HCL CH4 C-S S-S S NAOH-S  &
        NACL-S NAF-S AS CD HG SE FE SIO2 AL2O3 FE-S SIO2-S  &
        AL2O3-S AS-S BA-S CD-S CR-S PB-S SE-S AG-S CACO3-S  &
        MGO-S NA2O-S K2O-S FE3O4 FE3O4-S CAO-S FRACS=0 0 0  &
        0 0 0 0 0 0 0 0 0 1 1 1 1 1 1 0 0 0 0 1 1  &
        1 1 1 1 0 1 0 1 1 0 1 1 1 1 1 1 1 1
    FRAC STREAM=FLYASH SUBSTREAM=CISOLID COMPS=C-S S-S NAOH-S  &
        NACL-S NAF-S FE-S SIO2-S AL2O3-S AS-S BA-S CD-S CR-S  &
        PB-S SE-S AG-S CACO3-S MGO-S NA2O-S K2O-S FE3O4-S  &
        CAO-S FRACS=1 1 1 1 1 1 1 1 0 1 0 1 1 0 1 1 1 1 1 1 1
    FLASH-SPECS FLYASH TEMP=68 PRES=1 <ATM>

BLOCK FEED-SEP SEP
    FRAC STREAM=SOLIDS SUBSTREAM=MIXED COMPS=H2 O2 N2 CL2  &
        F2 NO SO2 H2O CO2 CO HCL CH4 C-S S-S S NAOH-S  &
        NACL-S NAF-S AS CD HG SE FE SIO2 AL2O3 FE-S SIO2-S  &
        AL2O3-S AS-S BA-S CD-S CR-S PB-S SE-S AG-S CACO3-S  &
        MGO-S NA2O-S K2O-S FE3O4 FE3O4-S CAO-S FRACS=0 0 0  &
        0 0 0 0 0 0 0 0 0 .05 .05 .05 .95 .95 .95 .95  &
        .95 .95 .95 .95 .95 .95 .95 .95 .95 .95 .95 .95  &
        .95 .95 .95 .95 .95 .95 .95 .95 .95 .95 .95
    FRAC STREAM=SOLIDS SUBSTREAM=CISOLID COMPS=C-S S-S NAOH-S  &
        NACL-S NAF-S FE-S SIO2-S AL2O3-S AS-S BA-S CD-S CR-S  &
        PB-S SE-S AG-S CACO3-S MGO-S NA2O-S K2O-S FE3O4-S  &
        CAO-S FRACS=.05 .05 .95 .95 .95 .95 .95 .95 .95  &
        .95 .95 .95 .95 .95 .95 .95 .95 .95 .95 .95 .95
    FLASH-SPECS SOLIDS TEMP=68 PRES=1 <ATM>
    FLASH-SPECS ORGANICS TEMP=68 PRES=1 <ATM>

BLOCK PLAS-SEP SEP
    FRAC STREAM=METAL SUBSTREAM=MIXED COMPS=H2 O2 N2 CL2 F2  &
        NO SO2 H2O CO2 CO HCL CH4 C-S S-S S NAOH-S NACL-S  &
        NAF-S AS CD HG SE FE SIO2 AL2O3 FE-S SIO2-S AL2O3-S  &
        AS-S BA-S CD-S CR-S PB-S SE-S AG-S CACO3-S MGO-S  &
        NA2O-S K2O-S FE3O4 FE3O4-S CAO-S FRACS=0 0 0 0 0 0  &
```

```
        0 0 0 0 0 0 0 0 0 0 0 0 0 0 0 0 1 0 0 1 0  &
        0 0 1 0 1 1 0 1 0 0 0 0 0 0 0
    FRAC STREAM=METAL SUBSTREAM=CISOLID COMPS=C-S S-S NAOH-S  &
        NACL-S NAF-S FE-S SIO2-S AL2O3-S AS-S BA-S CD-S CR-S  &
        PB-S SE-S AG-S CACO3-S MGO-S NA2O-S K2O-S FE3O4-S  &
        CAO-S FRACS=0 0 0 0 0 1 0 0 0 1 0 1 1 0 1 0 0 0 0 0 0
    FRAC STREAM=SLAG SUBSTREAM=MIXED COMPS=H2 O2 N2 CL2 F2  &
        NO SO2 H2O CO2 CO HCL CH4 C-S S-S S NAOH-S NACL-S  &
        NAF-S AS CD HG SE FE SIO2 AL2O3 FE-S SIO2-S AL2O3-S  &
        AS-S BA-S CD-S CR-S PB-S SE-S AG-S CACO3-S MGO-S  &
        NA2O-S K2O-S FE3O4 FE3O4-S CAO-S FRACS=0 0 0 0 0 0  &
        0 0 0 0 0 0 1 1 1 1 1 1 0 0 0 0 0 1 1 0 1  &
        1 0 0 0 0 0 0 0 1 1 1 1 1 1 1
    FRAC STREAM=SLAG SUBSTREAM=CISOLID COMPS=C-S S-S NAOH-S  &
        NACL-S NAF-S FE-S SIO2-S AL2O3-S AS-S BA-S CD-S CR-S  &
        PB-S SE-S AG-S CACO3-S MGO-S NA2O-S K2O-S FE3O4-S  &
        CAO-S FRACS=1 1 1 1 1 0 1 1 0 0 0 0 0 0 0 1 1 1 1 1 1

BLOCK L-V-SEP FLASH2
    PARAM TEMP=120 PRES=1 <ATM>

BLOCK PLASMA RGIBBS
    PARAM TEMP=3000 PRES=1 <ATM> NPHASE=2 CHEMEQ=YES
    PROD H2 / O2 / N2 / CL2 / F2 / NO / SO2 / H2O /  &
        CO2 / CO / HCL / CH4 / C-S SS / S / AS / CD /  &
        HG / SE / FE / SIO2 / AL2O3 / BA-S SS / CR-S  &
        SS / PB-S SS / AG-S SS / MGO-S SS / NA2O-S SS /  &
        K2O-S SS / FE3O4 / CAO-S SS

BLOCK PLENUM RGIBBS
    PARAM TEMP=1800 PRES=1 <ATM> NPHASE=2
    PROD H2 / O2 / N2 / CL2 / F2 / NO / SO2 / H2O /  &
        CO2 / CO / HCL / C-S SS / S-S SS / S / AS /  &
        CD / HG / SE / FE-S SS / SIO2-S SS / AL2O3-S SS  &
        / BA-S SS / CR-S SS / PB-S SS / AG-S SS / MGO-S  &
        SS / NA2O-S SS / K2O-S SS / FE3O4-S SS / CAO-S SS

BLOCK QUENCH RGIBBS
    PARAM TEMP=350 PRES=1 <ATM> NPHASE=2
    PROD H2 / O2 / N2 / F2 / NO / SO2 / H2O / CO2 /  &
        CO / HCL / AS / CD / HG / SE / FE-S SS /  &
        SIO2-S SS / AL2O3-S SS / AS-S SS / BA-S SS /  &
        CD-S SS / CR-S SS / PB-S SS / SE-S SS / AG-S SS  &
        / MGO-S SS / NA2O-S SS / K2O-S SS / FE3O4-S SS / CAO-S SS

BLOCK SCC RGIBBS
    PARAM TEMP=2200 PRES=1 <ATM> NPHASE=2 MAXIT=100 TOL=0.00001
    PROD H2 / O2 / N2 / CL2 / F2 / NO / SO2 / H2O /  &
        CO2 / CO / HCL / AS / CD / HG / SE / FE-S SS  &
        / SIO2-S SS / AL2O3-S SS / BA-S SS / CR-S SS /  &
        PB-S SS / AG-S SS / MGO-S SS / NA2O-S SS / K2O-S  &
        SS / FE3O4-S SS / CAO-S SS

BLOCK SCRUB RGIBBS
    PARAM TEMP=120 PRES=1 <ATM> NPHASE=2 MAXIT=500
    PROD H2 / O2 / N2 / CL2 / F2 / NO / SO2 / H2O /  &
        CO2 / CO / HCL / NAOH-S SS / NACL-S SS / NAF-S SS

DESIGN-SPEC AIR
    DEFINE OXIN1 MASS-FLOW STREAM=AIR SUBSTREAM=MIXED  &
        COMPONENT=O2
    DEFINE OXIN2 MASS-FLOW STREAM=ORGANICS SUBSTREAM=MIXED  &
```

```
        COMPONENT=O2
    DEFINE OXOUT MASS-FLOW STREAM=EFFLUENT SUBSTREAM=MIXED  &
        COMPONENT=O2
    SPEC "OXIN1+OXIN2" TO "6.0*OXOUT"
    TOL-SPEC "0.1"
    VARY STREAM-VAR STREAM=AIR SUBSTREAM=MIXED  &
        VARIABLE=MASS-FLOW
    LIMITS "1" "10000"

DESIGN-SPEC AIR2
    DEFINE OXIN1 MASS-FLOW STREAM=AIR2 SUBSTREAM=MIXED  &
        COMPONENT=O2
    DEFINE OXIN2 MASS-FLOW STREAM=EFFLUENT SUBSTREAM=MIXED  &
        COMPONENT=O2
    DEFINE OXOUT MASS-FLOW STREAM=SCCOUT SUBSTREAM=MIXED  &
        COMPONENT=O2
    SPEC "OXIN1+OXIN2" TO "6.0*OXOUT"
    TOL-SPEC "0.1"
    VARY STREAM-VAR STREAM=AIR2 SUBSTREAM=MIXED  &
        VARIABLE=MASS-FLOW
    LIMITS "1" "100000 "

DESIGN-SPEC NAOH
    DEFINE CAUIN MASS-FLOW STREAM=NAOH SUBSTREAM=CISOLID  &
        COMPONENT=NAOH-S
    DEFINE CAUOUT MASS-FLOW STREAM=SCRUBOUT SUBSTREAM=CISOLID  &
        COMPONENT=NAOH-S
    SPEC "CAUIN" TO "100.*CAUOUT"
    TOL-SPEC "0.01"
    VARY STREAM-VAR STREAM=NAOH SUBSTREAM=CISOLID  &
        VARIABLE=MASS-FLOW
    LIMITS "1" "1000"

DESIGN-SPEC QQUENCH
    DEFINE QQUENC BLOCK-VAR BLOCK=QUENCH VARIABLE=QCALC  &
        SENTENCE=PARAM
    SPEC "QQUENC" TO "0"
    TOL-SPEC "1  "
    VARY STREAM-VAR STREAM=QNCH2O SUBSTREAM=MIXED  &
        VARIABLE=MASS-FLOW
    LIMITS "1" "100000"

DESIGN-SPEC SCRUBH2O
    DEFINE MASSAL STREAM-VAR STREAM=SCRUBBOT SUBSTREAM=CISOLID  &
        VARIABLE=MASS-FLOW
    DEFINE SCRUB STREAM-VAR STREAM=SCRUBH2O SUBSTREAM=MIXED  &
        VARIABLE=MASS-FLOW
    DEFINE NAOH STREAM-VAR STREAM=NAOH SUBSTREAM=CISOLID  &
        VARIABLE=MASS-FLOW
    SPEC "SCRUB" TO "20*MASSAL"
    TOL-SPEC "0.01"
    VARY STREAM-VAR STREAM=SCRUBH2O SUBSTREAM=MIXED  &
        VARIABLE=MASS-FLOW
    LIMITS "NAOH" "5000"

DESIGN-SPEC SOILH2O
    DEFINE SLAG1 STREAM-VAR STREAM=SLAG SUBSTREAM=MIXED  &
        VARIABLE=MASS-FLOW
    DEFINE SLAG2 STREAM-VAR STREAM=SLAG SUBSTREAM=CISOLID  &
        VARIABLE=MASS-FLOW
    DEFINE SOIL STREAM-VAR STREAM=SOIL SUBSTREAM=MIXED  &
        VARIABLE=MASS-FLOW
```

```
    SPEC "30.*SOIL" TO "SLAG1+SLAG2"
    TOL-SPEC "10"
    VARY STREAM-VAR STREAM=SOIL SUBSTREAM=MIXED  &
        VARIABLE=MASS-FLOW
    LIMITS "1" "1000"

DESIGN-SPEC SOILSOL
    DEFINE SLAG1 STREAM-VAR STREAM=SLAG SUBSTREAM=MIXED  &
        VARIABLE=MASS-FLOW
    DEFINE SLAG2 STREAM-VAR STREAM=SLAG SUBSTREAM=CISOLID  &
        VARIABLE=MASS-FLOW
    DEFINE SOIL STREAM-VAR STREAM=SOIL SUBSTREAM=CISOLID  &
        VARIABLE=MASS-FLOW
    SPEC "3.33333*SOIL" TO "SLAG1+SLAG2"
    TOL-SPEC "10"
    VARY STREAM-VAR STREAM=SOIL SUBSTREAM=CISOLID  &
        VARIABLE=MASS-FLOW
    LIMITS "1 " "1000"

CONV-OPTIONS
    PARAM SPEC-METHOD=BROYDEN
    WEGSTEIN MAXIT=100
    SECANT MAX-STEP-SIZ=.05 BRACKET=YES

STREAM-REPOR NOSORT MOLEFLOW MASSFLOW PROPERTIES=ALL-SUBS
```

System C-2

```
TITLE  &
        'ITTS PHASE II - PLASMA, CO2 RETENTION - MODEL SYSC2-3 (main)'

IN-UNITS ENG

DEF-STREAMS MIXCISLD ALL

DIAGNOSTICS
    TERMINAL SIM-LEVEL=8 CONV-LEVEL=8

RUN-CONTROL MAX-TIME=1800

DESCRIPTION "ACCEPTS COMBUSTIBLE AND NON-COMBUSTIBLE WASTES, AND
        METALS WITH FIXED CONTAMINATION.
        MOD 3, REL 9, ADD SOIL DESIGN SPEC. "

DATABANKS COMBUST  / INORGANIC  / PURECOMP  / SOLIDS  /  &
        NOASPENPCD

PROP-SOURCES COMBUST  / INORGANIC  / PURECOMP  / SOLIDS

COMPONENTS
    H2 H2 H2 /
    O2 O2 O2 /
    N2 N2 N2 /
    CL2 CL2 CL2 /
    F2 F2 F2 /
    NO NO NO /
    SO2 O2S SO2 /
    H2O H2O H2O /
    CO2 CO2 CO2 /
    CO CO CO /
    HCL HCL HCL /
    CH4 CH4 CH4 /
    C-S C C-S /
    S-S S S-S /
    S S S /
    NAOH-S NAOH NAOH-S /
    NACL-S NACL NACL-S /
    NAF-S NAF NAF-S /
    AS AS AS /
    CD CD CD /
    HG HG HG /
    SE SE SE /
    FE FE FE /
    SIO2 SIO2 SIO2 /
    AL2O3 AL2O3 AL2O3 /
    FE-S FE FE-S /
    SIO2-S SIO2 SIO2-S /
    AL2O3-S AL2O3 AL2O3-S /
    AS-S AS AS-S /
    BA-S BA BA-S /
    CD-S CD CD-S /
    CR-S CR CR-S /
    PB-S PB PB-S /
    SE-S SE SE-S /
    AG-S AG AG-S /
    CACO3-S CACO3 CACO3-S /
    MGO-S MGO MGO-S /
```

```
    NA2O-S NA2O NA2O-S /
    K2O-S K2O K2O-S /
    FE3O4 FE3O4 FE3O4 /
    FE3O4-S FE3O4 FE3O4-S /
    CAO-S CAO CAO-S /
    CACL2-S CACL2 CACL2-S /
    CASO4-S CASO4 CASO4-S

FLOWSHEET
    BLOCK PLASMA IN=SOLIDS OUT=PLASOUT
    BLOCK PLAS-SEP IN=PLASOUT OUT=METAL PLASVAP SLAG
    BLOCK SCC IN=FUELMIX2 EFFLUENT OUT=OUT2
    BLOCK BAGHOUSE IN=QUENCHED OUT=QNCHVAP HGPLUS FLYASH
    BLOCK SCRUBSEP IN=SCRUBOUT OUT=SCRUBVAP SCRUBBOT
    BLOCK ABSSEP IN=ABSORBED OUT=ABSGAS ABSSOL
    BLOCK CO2-DES IN=ABSSOL OUT=CO2-DES
    BLOCK FLASH IN=ABSGAS OUT=EXHAUST H2OOUT
    BLOCK CO2-SEP IN=CO2-DES OUT=CO2 CAO-OUT
    BLOCK SPLIT IN=CAO-OUT OUT=RECYCLE CAOSCRUB SPENTCAO
    BLOCK CAOMIXER IN=RECYCLE CAO-IN OUT=CAOMIXED
    BLOCK DRYSCRUB IN=CAOSCRUB QNCHVAP OUT=SCRUBOUT
    BLOCK QUENCH IN=SCCOUT QNCH2O OUT=QUENCHED
    BLOCK DUPL2 IN=OUT2 OUT=SCCOUT DUM2IN
    BLOCK Q2 IN=DUM2IN OUT=DUM2OUT
    BLOCK GASQUENC IN=QNCH2O-2 CO2 OUT=CO2OUT
    BLOCK CO2-ABS IN=SCRUBVAP CAOMIXED OUT=ABSORBED
    BLOCK EX-SPLIT IN=EXHAUST OUT=EX-RECYC OFFGAS
    BLOCK FEED-SEP IN=SOIL FDWASTEC FDWASTEN FDMETMLT FLYASH  &
        OUT=SOLIDS ORGANICS
    BLOCK PLENUM IN=ORGANICS OXYGEN EX-RECYC PLASVAP OUT= &
        EFFLUENT

PROPERTIES SOLIDS
    PROPERTIES IDEAL / RKS-BM

PROP-SET SET1 VLSTDMX UNITS='CUFT/HR' SUBSTREAM=MIXED

STREAM CAO-IN
    SUBSTREAM CISOLID TEMP=68 PRES=1 <ATM> MASS-FLOW=172
    MASS-FLOW CAO-S 1

STREAM FDMETMLT
    SUBSTREAM MIXED TEMP=68 PRES=1 <ATM> MASS-FLOW=1.20
    MASS-FLOW H2 2.42
    SUBSTREAM CISOLID TEMP=68 PRES=1 <ATM> MASS-FLOW=147.80
    MASS-FLOW C-S 14.44 / FE-S 282.02 / SIO2-S 0.035 /  &
        AL2O3-S 0.035 / BA-S 0.87 / CD-S 0.18

STREAM FDWASTEC
    SUBSTREAM MIXED TEMP=68 PRES=1 <ATM>
    MASS-FLOW H2 50.95 / O2 92.76 / N2 0.23 / CL2 53.02 /  &
        F2 0.11 / H2O 19.83
    SUBSTREAM CISOLID TEMP=68 PRES=1 <ATM>
    MASS-FLOW C-S 326.28 / S-S 0.49 / FE-S 7.67 / SIO2-S  &
        53.01 / AL2O3-S 53.01 / BA-S 0.77 / CD-S 0.77 /  &
        CR-S 1.53

STREAM FDWASTEN
    SUBSTREAM MIXED TEMP=68 PRES=1 <ATM>
    MASS-FLOW H2 0.54 / O2 1.44 / N2 0.01 / CL2 14.88 /  &
        NO 0.66 / SO2 0.83 / H2O 354.23 / HG 0.15
    SUBSTREAM CISOLID TEMP=68 PRES=1 <ATM>
```

```
    MASS-FLOW C-S 4.77 / S-S 0.62 / SIO2-S 476.77 /  &
        AL2O3-S 476.77 / AS-S 0.06 / BA-S 0.04 / CD-S 2.63  &
        / CR-S 4.95 / PB-S 0.17 / SE-S 0.03 / AG-S 0.03

STREAM FUELMIX2
    SUBSTREAM MIXED TEMP=68 PRES=1 <ATM> MASS-FLOW=10
    MASS-FLOW O2 0.222 / CH4 0.046

STREAM OXYGEN
    SUBSTREAM MIXED TEMP=68 PRES=1 <ATM> MASS-FLOW=100
    MASS-FLOW O2 1

STREAM PLASOUT
    SUBSTREAM MIXED TEMP=3000 PRES=1 <ATM>
    MASS-FLOW H2 51 / N2 4 / CL2 53 / H2O 375 / CO 784  &
        / FE 148 / SIO2 1012 / AL2O3 725
    SUBSTREAM CISOLID TEMP=3000 PRES=1 <ATM>
    MASS-FLOW C-S 0 / S-S 0 / SIO2-S 1

STREAM QNCH2O
    SUBSTREAM MIXED TEMP=68 PRES=1 <ATM> MASS-FLOW=5675
    MASS-FLOW H2O 1

STREAM QNCH2O-2
    SUBSTREAM MIXED TEMP=68 PRES=1 <ATM> MASS-FLOW=100
    MASS-FLOW H2O 1

STREAM SOIL
    SUBSTREAM MIXED TEMP=68 PRES=1 <ATM> MASS-FLOW=62.5
    MASS-FLOW H2O .100
    SUBSTREAM CISOLID TEMP=68 PRES=1 <ATM> MASS-FLOW=562.5
    MASS-FLOW SIO2-S 0.569 / AL2O3-S 0.102 / CACO3-S 0.128 /  &
        MGO-S 0.023 / NA2O-S 0.013 / K2O-S 0.024 / FE3O4-S 0.041

BLOCK CAOMIXER MIXER
    PARAM PRES=1 <ATM> NPHASE=3

BLOCK EX-SPLIT FSPLIT
    FRAC EX-RECYC 0.90

BLOCK SPLIT FSPLIT
    FRAC RECYCLE 0.90 / CAOSCRUB 0.09

BLOCK ABSSEP SEP
    FRAC STREAM=ABSSOL SUBSTREAM=MIXED COMPS=H2 O2 N2 CL2  &
        F2 NO SO2 H2O CO2 CO HCL CH4 C-S S-S S NAOH-S  &
        NACL-S NAF-S AS CD HG SE FE SIO2 AL2O3 FE-S SIO2-S  &
        AL2O3-S AS-S BA-S CD-S CR-S PB-S SE-S AG-S CACO3-S  &
        MGO-S NA2O-S K2O-S FE3O4 FE3O4-S CAO-S CACL2-S CASO4-S  &
        FRACS=0 0 0 0 0 0 0 0 0 0 0 0 1 1 1 1 1 1  &
        1 1 1 1 1 1 1 1 1 1 1 1 1 1 1 1 1 1 1 1 1 1 1 1 1 1 1
    FRAC STREAM=ABSSOL SUBSTREAM=CISOLID COMPS=C-S S-S NAOH-S  &
        NACL-S NAF-S FE-S SIO2-S AL2O3-S AS-S BA-S CD-S CR-S  &
        PB-S SE-S AG-S CACO3-S MGO-S NA2O-S K2O-S FE3O4-S  &
        CAO-S CACL2-S CASO4-S FRACS=1 1 1 1 1 1 1 1 1 1  &
        1 1 1 1 1 1 1 1 1 1 1 1 1

BLOCK BAGHOUSE SEP
    FRAC STREAM=HGPLUS SUBSTREAM=MIXED COMPS=H2 O2 N2 CL2  &
        F2 NO SO2 H2O CO2 CO HCL CH4 C-S S-S S NAOH-S  &
        NACL-S NAF-S AS CD HG SE FE SIO2 AL2O3 FE-S SIO2-S  &
        AL2O3-S AS-S BA-S CD-S CR-S PB-S SE-S AG-S CACO3-S  &
```

```
        MGO-S NA2O-S K2O-S FE3O4 FE3O4-S CAO-S CACL2-S CASO4-S  &
        FRACS=0 0 0 0 0 0 0 0 0 0 0 0 0 0 0 0 0 0 0  &
        1 1 1 1 0 0 0 0 0 0 1 0 1 0 0 1 0 0 0 0 0 0 0 0 0 0 0
    FRAC STREAM=HGPLUS SUBSTREAM=CISOLID COMPS=C-S S-S NAOH-S  &
        NACL-S NAF-S FE-S SIO2-S AL2O3-S AS-S BA-S CD-S CR-S  &
        PB-S SE-S AG-S CACO3-S MGO-S NA2O-S K2O-S FE3O4-S  &
        CAO-S CACL2-S CASO4-S FRACS=0 0 0 0 0 0 0 0 1 0  &
        1 0 0 1 0 0 0 0 0 0 0 0 0
    FRAC STREAM=FLYASH SUBSTREAM=MIXED COMPS=H2 O2 N2 CL2  &
        F2 NO SO2 H2O CO2 CO HCL CH4 C-S S-S S NAOH-S  &
        NACL-S NAF-S AS CD HG SE FE SIO2 AL2O3 FE-S SIO2-S  &
        AL2O3-S AS-S BA-S CD-S CR-S PB-S SE-S AG-S CACO3-S  &
        MGO-S NA2O-S K2O-S FE3O4 FE3O4-S CAO-S CACL2-S CASO4-S  &
        FRACS=0 0 0 0 0 0 0 0 0 0 0 0 0 1 1 1 1 1 1  &
        0 0 0 0 1 1 1 1 1 1 0 1 0 1 1 0 1 1 1 1 1 1 1 1 1 1
    FRAC STREAM=FLYASH SUBSTREAM=CISOLID COMPS=C-S S-S NAOH-S  &
        NACL-S NAF-S FE-S SIO2-S AL2O3-S AS-S BA-S CD-S CR-S  &
        PB-S SE-S AG-S CACO3-S MGO-S NA2O-S K2O-S FE3O4-S  &
        CAO-S CACL2-S CASO4-S FRACS=1 1 1 1 1 1 1 1 0 1  &
        0 1 1 0 1 1 1 1 1 1 1 1 1

BLOCK CO2-SEP SEP
    FRAC STREAM=CO2 SUBSTREAM=MIXED COMPS=H2 O2 N2 CL2 F2  &
        NO SO2 H2O CO2 CO HCL CH4 C-S S-S S NAOH-S NACL-S  &
        NAF-S AS CD HG SE FE SIO2 AL2O3 FE-S SIO2-S AL2O3-S  &
        AS-S BA-S CD-S CR-S PB-S SE-S AG-S CACO3-S MGO-S  &
        NA2O-S K2O-S FE3O4 FE3O4-S CAO-S CACL2-S CASO4-S  &
        FRACS=0 0 0 0 0 0 0 0 1 0 0 0 0 0 0 0 0 0  &
        0 0 0 0 0 0 0 0 0 0 0 0 0 0 0 0 0 0 0 0 0 0 0 0 0
    FRAC STREAM=CO2 SUBSTREAM=CISOLID COMPS=C-S S-S NAOH-S  &
        NACL-S NAF-S FE-S SIO2-S AL2O3-S AS-S BA-S CD-S CR-S  &
        PB-S SE-S AG-S CACO3-S MGO-S NA2O-S K2O-S FE3O4-S  &
        CAO-S CACL2-S CASO4-S FRACS=0 0 0 0 0 0 0 0 0 0  &
        0 0 0 0 0 0 0 0 0 0 0 0 0
    FLASH-SPECS CAO-OUT TEMP=68 PRES=1 <ATM>

BLOCK FEED-SEP SEP
    FRAC STREAM=SOLIDS SUBSTREAM=MIXED COMPS=H2 O2 N2 CL2  &
        F2 NO SO2 H2O CO2 CO HCL CH4 C-S S-S S NAOH-S  &
        NACL-S NAF-S AS CD HG SE FE SIO2 AL2O3 FE-S SIO2-S  &
        AL2O3-S AS-S BA-S CD-S CR-S PB-S SE-S AG-S CACO3-S  &
        MGO-S NA2O-S K2O-S FE3O4 FE3O4-S CAO-S CACL2-S CASO4-S  &
        FRACS=0 0 0 0 0 0 0 0 0 0 0 0 .05 .05 .05 .95  &
        .95 .95 .95 .95 .95 .95 .95 .95 .95 .95 .95 .95  &
        .95 .95 .95 .95 .95 .95 .95 .95 .95 .95 .95 .95 .95 .95 .95
    FRAC STREAM=SOLIDS SUBSTREAM=CISOLID COMPS=C-S S-S NAOH-S  &
        NACL-S NAF-S FE-S SIO2-S AL2O3-S AS-S BA-S CD-S CR-S  &
        PB-S SE-S AG-S CACO3-S MGO-S NA2O-S K2O-S FE3O4-S  &
        CAO-S CACL2-S CASO4-S FRACS=.05 .05 .95 .95 .95 .95  &
        .95 .95 .95 .95 .95 .95 .95 .95 .95 .95 .95 .95 .95 .95 .95 .95 .95

BLOCK PLAS-SEP SEP
    FRAC STREAM=METAL SUBSTREAM=MIXED COMPS=H2 O2 N2 CL2 F2  &
        NO SO2 H2O CO2 CO HCL CH4 C-S S-S S NAOH-S NACL-S  &
        NAF-S AS CD HG SE FE SIO2 AL2O3 FE-S SIO2-S AL2O3-S  &
        AS-S BA-S CD-S CR-S PB-S SE-S AG-S CACO3-S MGO-S  &
        NA2O-S K2O-S FE3O4 FE3O4-S CAO-S CACL2-S CASO4-S  &
        FRACS=0 0 0 0 0 0 0 0 0 0 0 0 0 0 0 0 0 0  &
        0 0 0 0 1 0 0 1 0 0 0 1 0 1 1 0 1 0 0 0 0 0 0 0 0 0
    FRAC STREAM=METAL SUBSTREAM=CISOLID COMPS=C-S S-S NAOH-S  &
        NACL-S NAF-S FE-S SIO2-S AL2O3-S AS-S BA-S CD-S CR-S  &
        PB-S SE-S AG-S CACO3-S MGO-S NA2O-S K2O-S FE3O4-S  &
```

```
        CAO-S CACL2-S CASO4-S FRACS=0 0 0 0 0 1 0 0 0 1  &
        0 1 1 0 1 0 0 0 0 0 0 0 0
    FRAC STREAM=SLAG SUBSTREAM=MIXED COMPS=H2 O2 N2 CL2 F2  &
        NO SO2 H2O CO2 CO HCL CH4 C-S S-S S NAOH-S NACL-S  &
        NAF-S AS CD HG SE FE SIO2 AL2O3 FE-S SIO2-S AL2O3-S  &
        AS-S BA-S CD-S CR-S PB-S SE-S AG-S CACO3-S MGO-S  &
        NA2O-S K2O-S FE3O4 FE3O4-S CAO-S CACL2-S CASO4-S  &
        FRACS=0 0 0 0 0 0 0 0 0 0 0 0 0 1 1 1 1 1 1  &
        0 0 0 0 0 1 1 0 1 1 0 0 0 0 0 0 0 1 1 1 1 1 1 1 1 1 1
    FRAC STREAM=SLAG SUBSTREAM=CISOLID COMPS=C-S S-S NAOH-S  &
        NACL-S NAF-S FE-S SIO2-S AL2O3-S AS-S BA-S CD-S CR-S  &
        PB-S SE-S AG-S CACO3-S MGO-S NA2O-S K2O-S FE3O4-S  &
        CAO-S CACL2-S CASO4-S FRACS=1 1 1 1 1 0 1 1 0 0  &
        0 0 0 0 0 1 1 1 1 1 1 1 1

BLOCK SCRUBSEP SEP
    FRAC STREAM=SCRUBBOT SUBSTREAM=MIXED COMPS=H2 O2 N2 CL2  &
        F2 NO SO2 H2O CO2 CO HCL CH4 C-S S-S S NAOH-S  &
        NACL-S NAF-S AS CD HG SE FE SIO2 AL2O3 FE-S SIO2-S  &
        AL2O3-S AS-S BA-S CD-S CR-S PB-S SE-S AG-S CACO3-S  &
        MGO-S NA2O-S K2O-S FE3O4 FE3O4-S CAO-S CACL2-S CASO4-S  &
        FRACS=0 0 0 0 0 0 0 0 0 0 0 0 0 1 1 0 1 1 1  &
        1 1 1 1 1 1 1 1 1 1 1 1 1 1 1 1 1 1 1 1 1 1 1 1 1 1 1
    FRAC STREAM=SCRUBBOT SUBSTREAM=CISOLID COMPS=C-S S-S  &
        NAOH-S NACL-S NAF-S FE-S SIO2-S AL2O3-S AS-S BA-S  &
        CD-S CR-S PB-S SE-S AG-S CACO3-S MGO-S NA2O-S K2O-S  &
        FE3O4-S CAO-S CACL2-S CASO4-S FRACS=1 1 1 1 1 1 1  &
        1 1 1 1 1 1 1 1 1 1 1 1 1 1 1 1 1

BLOCK FLASH FLASH2
    PARAM TEMP=90 PRES=1 <ATM>
    PROPERTIES IDEAL

BLOCK CO2-ABS RSTOIC
    PARAM TEMP=1200 PRES=1 <ATM> MAXIT=200
    STOIC 1 MIXED CO2 -1 / CISOLID CAO-S -1 / CACO3-S 1
    CONV 1 MIXED CO2 1

BLOCK CO2-DES RGIBBS
    PARAM TEMP=1700 PRES=1 <ATM> NPHASE=2
    PROD CO2 / CAO-S SS
    PROPERTIES IDEAL

BLOCK DRYSCRUB RGIBBS
    PARAM TEMP=350 PRES=1 <ATM> NPHASE=2 MAXIT=500
    PROD H2 / O2 / N2 / CL2 / F2 / NO / SO2 / H2O /  &
        CO2 / CO / HCL / CH4 / CASO4-S SS / CACL2-S SS / CAO-S SS

BLOCK GASQUENC RGIBBS
    PARAM TEMP=350 PRES=1 <ATM> NPHASE=2 MAXIT=500
    PROD H2 / O2 / H2O / CO2 / CO / C-S SS
    PROD-FRAC H2 1 / O2 1 / H2O 1 / CO2 1

BLOCK PLASMA RGIBBS
    PARAM TEMP=3000 PRES=1 <ATM> NPHASE=2 CHEMEQ=YES
    PROD H2 / O2 / N2 / CL2 / F2 / NO / SO2 / H2O /  &
        CO2 / CO / HCL / CH4 / C-S SS / S / AS / CD /  &
        HG / SE / FE / SIO2 / AL2O3 / BA-S SS / CR-S  &
        SS / PB-S SS / AG-S SS / MGO-S SS / NA2O-S SS /  &
        K2O-S SS / FE3O4 / CAO-S SS

BLOCK PLENUM RGIBBS
```

```
    PARAM TEMP=1800 PRES=1 <ATM> NPHASE=2
    PROD H2 / O2 / N2 / CL2 / F2 / NO / SO2 / H2O /  &
        CO2 / CO / HCL / C-S SS / S-S SS / S / AS /  &
        CD / HG / SE / FE-S SS / SIO2-S SS / AL2O3-S SS  &
        / BA-S SS / CR-S SS / PB-S SS / AG-S SS / MGO-S  &
        SS / NA2O-S SS / K2O-S SS / FE3O4-S SS / CAO-S SS

BLOCK Q2 RGIBBS
    PARAM TEMP=68 PRES=1 <ATM> NPHASE=2 TAPP=2132
    PROD H2 / O2 / N2 / CL2 / F2 / NO / SO2 / H2O /  &
        CO2 / CO / HCL / AS / CD / HG / SE / FE-S SS  &
        / SIO2-S SS / AL2O3-S SS / BA-S SS / CR-S SS /  &
        PB-S SS / AG-S SS / MGO-S SS / NA2O-S SS / K2O-S  &
        SS / FE3O4-S SS / CAO-S SS

BLOCK QUENCH RGIBBS
    PARAM TEMP=350 PRES=1 <ATM> NPHASE=2
    PROD H2 / O2 / N2 / CL2 / F2 / NO / SO2 / H2O /  &
        CO2 / CO / HCL / AS / CD / HG / SE / FE-S SS  &
        / SIO2-S SS / AL2O3-S SS / AS-S SS / BA-S SS /  &
        CD-S SS / CR-S SS / PB-S SS / SE-S SS / AG-S SS  &
        / MGO-S SS / NA2O-S SS / K2O-S SS / FE3O4-S SS / CAO-S SS

BLOCK SCC RGIBBS
    PARAM TEMP=2200 PRES=1 <ATM> NPHASE=2 MAXIT=100
    PROD H2 / O2 / N2 / CL2 / F2 / NO / SO2 / H2O /  &
        CO2 / CO / HCL / AS / CD / HG / SE / FE-S SS  &
        / SIO2-S SS / AL2O3-S SS / BA-S SS / CR-S SS /  &
        PB-S SS / AG-S SS / MGO-S SS / NA2O-S SS / K2O-S  &
        SS / FE3O4-S SS / CAO-S SS

BLOCK DUPL2 DUPL

DESIGN-SPEC CAO
    DEFINE CO2CON MOLE-FLOW STREAM=SCRUBVAP SUBSTREAM=MIXED  &
        COMPONENT=CO2
    DEFINE CAOMXD MOLE-FLOW STREAM=CAOMIXED SUBSTREAM=CISOLID  &
        COMPONENT=CAO-S
    SPEC "CO2CON" TO "CAOMXD"
    TOL-SPEC "0.1"
    VARY STREAM-VAR STREAM=CAO-IN SUBSTREAM=CISOLID  &
        VARIABLE=MASS-FLOW
    LIMITS "1" "10000"

DESIGN-SPEC OXYGEN
    DEFINE OXIN1 MASS-FLOW STREAM=OXYGEN SUBSTREAM=MIXED  &
        COMPONENT=O2
    DEFINE OXIN2 MASS-FLOW STREAM=EX-RECYC SUBSTREAM=MIXED  &
        COMPONENT=O2
    DEFINE OXIN3 MASS-FLOW STREAM=ORGANICS SUBSTREAM=MIXED  &
        COMPONENT=O2
    DEFINE OXOUT MASS-FLOW STREAM=EFFLUENT SUBSTREAM=MIXED  &
        COMPONENT=O2
    SPEC "OXIN1+OXIN2+OXIN3" TO "3.5*OXOUT"
    TOL-SPEC "0.1"
    VARY STREAM-VAR STREAM=OXYGEN SUBSTREAM=MIXED  &
        VARIABLE=MASS-FLOW
    LIMITS "1" "100000"

DESIGN-SPEC QQUENCH
    DEFINE QQUENC BLOCK-VAR BLOCK=QUENCH VARIABLE=QCALC  &
        SENTENCE=PARAM
```

```
    SPEC "QQUENC" TO "0"
    TOL-SPEC "1  "
    VARY STREAM-VAR STREAM=QNCH2O SUBSTREAM=MIXED  &
        VARIABLE=MASS-FLOW
    LIMITS "1" "100000"

DESIGN-SPEC QQUENCH2
    DEFINE QGASQU BLOCK-VAR BLOCK=GASQUENC VARIABLE=QCALC  &
        SENTENCE=PARAM
    SPEC "QGASQU" TO "0"
    TOL-SPEC "1."
    VARY STREAM-VAR STREAM=QNCH2O-2 SUBSTREAM=MIXED  &
        VARIABLE=MASS-FLOW
    LIMITS "1" "5000"

DESIGN-SPEC QSCC
    DEFINE QSCC BLOCK-VAR BLOCK=SCC VARIABLE=QCALC  &
        SENTENCE=PARAM
    DEFINE Q2 BLOCK-VAR BLOCK=Q2 VARIABLE=QCALC SENTENCE=PARAM
    SPEC "QSCC " TO "0.05*Q2"
    TOL-SPEC "1."
    VARY STREAM-VAR STREAM=FUELMIX2 SUBSTREAM=MIXED  &
        VARIABLE=MASS-FLOW
    LIMITS "1" "1000 "

DESIGN-SPEC SCRUB
    DEFINE CAOIN MASS-FLOW STREAM=CAOSCRUB SUBSTREAM=CISOLID  &
        COMPONENT=CAO-S
    DEFINE CAOOUT MASS-FLOW STREAM=SCRUBOUT SUBSTREAM=CISOLID  &
        COMPONENT=CAO-S
    SPEC "CAOIN" TO "100.*CAOOUT"
    TOL-SPEC "0.001"
    VARY BLOCK-VAR BLOCK=SPLIT SENTENCE=FRAC VARIABLE=FRAC  &
        ID1=CAOSCRUB
    LIMITS "0" "0.10"

DESIGN-SPEC SOILH2O
    DEFINE SLAG1 STREAM-VAR STREAM=SLAG SUBSTREAM=MIXED  &
        VARIABLE=MASS-FLOW
    DEFINE SLAG2 STREAM-VAR STREAM=SLAG SUBSTREAM=CISOLID  &
        VARIABLE=MASS-FLOW
    DEFINE SOIL STREAM-VAR STREAM=SOIL SUBSTREAM=MIXED  &
        VARIABLE=MASS-FLOW
    SPEC "30.*SOIL" TO "SLAG1+SLAG2"
    TOL-SPEC "10"
    VARY STREAM-VAR STREAM=SOIL SUBSTREAM=MIXED  &
        VARIABLE=MASS-FLOW
    LIMITS "1" "1000"

DESIGN-SPEC SOILSOL
    DEFINE SLAG1 STREAM-VAR STREAM=SLAG SUBSTREAM=MIXED  &
        VARIABLE=MASS-FLOW
    DEFINE SLAG2 STREAM-VAR STREAM=SLAG SUBSTREAM=CISOLID  &
        VARIABLE=MASS-FLOW
    DEFINE SOIL STREAM-VAR STREAM=SOIL SUBSTREAM=CISOLID  &
        VARIABLE=MASS-FLOW
    SPEC "3.33333*SOIL" TO "SLAG1+SLAG2"
    TOL-SPEC "10"
    VARY STREAM-VAR STREAM=SOIL SUBSTREAM=CISOLID  &
        VARIABLE=MASS-FLOW
    LIMITS "1 " "1000"
```

```
CONV-OPTIONS
    WEGSTEIN MAXIT=100
    SECANT MAX-STEP-SIZ=.05 BRACKET=YES

STREAM-REPOR NOSORT MOLEFLOW MASSFLOW PROPERTIES=SET1
```

System C-3

```
TITLE 'ITTS PHASE II - PLASMA GASIFICATION - MODEL SYSC3-4 (main)'

IN-UNITS ENG

DEF-STREAMS MIXCISLD ALL

DIAGNOSTICS
    TERMINAL SIM-LEVEL=8 CONV-LEVEL=8

RUN-CONTROL MAX-TIME=1800

DESCRIPTION "ACCEPTS COMBUSTIBLE AND NON-COMBUSTIBLE WASTES, AND
        METAL WITH FIXED CONTAMINATION.
        MOD 3, RELEASE 9, ADD SOIL DESIGN SPEC "

DATABANKS COMBUST  / INORGANIC  / PURECOMP  / SOLIDS  /  &
        NOASPENPCD

PROP-SOURCES COMBUST  / INORGANIC  / PURECOMP  / SOLIDS

COMPONENTS
    H2 H2 H2 /
    O2 O2 O2 /
    N2 N2 N2 /
    CL2 CL2 CL2 /
    F2 F2 F2 /
    NO NO NO /
    SO2 O2S SO2 /
    H2O H2O H2O /
    CO2 CO2 CO2 /
    CO CO CO /
    HCL HCL HCL /
    CH4 CH4 CH4 /
    C-S C C-S /
    S-S S S-S /
    S S S /
    NAOH-S NAOH NAOH-S /
    NACL-S NACL NACL-S /
    NAF-S NAF NAF-S /
    AS AS AS /
    CD CD CD /
    HG HG HG /
    SE SE SE /
    FE FE FE /
    SIO2 SIO2 SIO2 /
    AL2O3 AL2O3 AL2O3 /
    FE-S FE FE-S /
    SIO2-S SIO2 SIO2-S /
    AL2O3-S AL2O3 AL2O3-S /
    AS-S AS AS-S /
    BA-S BA BA-S /
    CD-S CD CD-S /
    CR-S CR CR-S /
    PB-S PB PB-S /
    SE-S SE SE-S /
    AG-S AG AG-S /
    CACO3-S CACO3 CACO3-S /
    MGO-S MGO MGO-S /
    NA2O-S NA2O NA2O-S /
```

```
    K2O-S K2O K2O-S /
    FE3O4 FE3O4 FE3O4 /
    FE3O4-S FE3O4 FE3O4-S /
    CAO-S CAO CAO-S

FLOWSHEET
    BLOCK BAGHOUSE IN=QUENCHED OUT=VAPOR FLYASH HGPLUS
    BLOCK SLAG-SEP IN=EFFLUENT OUT=METAL GASVAP SLAG
    BLOCK CATALYST IN=AIR SCRUBVAP OUT=EXHAUST
    BLOCK QUENCH IN=QNCH2O SYNGAS OUT=QUENCHED
    BLOCK SCRUB IN=SCRUBH2O NAOH VAPOR OUT=SCRUBOUT
    BLOCK L-V-SEP IN=SCRUBOUT OUT=SCRUBVAP SCRUBBOT
    BLOCK STEAMGEN IN=WATER OUT=STEAM
    BLOCK PLENUM IN=STEAM GASVAP ORGANICS OUT=SYNGAS
    BLOCK FEED-SEP IN=FLYASH FDWASTEC FDWASTEN FDMETMLT SOIL  &
        OUT=SOLIDS ORGANICS
    BLOCK GASIFIER IN=SOLIDS OUT=EFFLUENT

PROPERTIES SOLIDS
    PROPERTIES IDEAL / RKS-BM

PROP-SET ALL-SUBS TEMP PRES VFRAC VOLFLMX UNITS='ATM'  &
        SUBSTREAM=ALL

STREAM AIR
    SUBSTREAM MIXED TEMP=68 PRES=1 <ATM> MASS-FLOW=10250
    MASS-FRAC O2 0.233 / N2 0.767

STREAM FDMETMLT
    SUBSTREAM MIXED TEMP=68 PRES=1 <ATM> MASS-FLOW=1.20
    MASS-FLOW H2 2.42
    SUBSTREAM CISOLID TEMP=68 PRES=1 <ATM> MASS-FLOW=147.8
    MASS-FLOW C-S 14.44 / FE-S 282.02 / SIO2-S 0.035 /  &
        AL2O3-S 0.035 / BA-S 0.87 / CD-S 0.18

STREAM FDWASTEC
    SUBSTREAM MIXED TEMP=68 PRES=1 <ATM>
    MASS-FLOW H2 50.95 / O2 92.76 / N2 0.23 / CL2 53.02 /  &
        F2 0.11 / H2O 19.83
    SUBSTREAM CISOLID TEMP=68 PRES=1 <ATM>
    MASS-FLOW C-S 326.28 / S-S 0.49 / FE-S 7.67 / SIO2-S  &
        53.01 / AL2O3-S 53.01 / BA-S 0.77 / CD-S 0.77 / CR-S 1.53

STREAM FDWASTEN
    SUBSTREAM MIXED TEMP=68 PRES=1 <ATM>
    MASS-FLOW H2 0.54 / O2 1.44 / N2 0.01 / CL2 14.88 /  &
        NO 0.66 / SO2 0.83 / H2O 354.23 / HG 0.15
    SUBSTREAM CISOLID TEMP=68 PRES=1 <ATM>
    MASS-FLOW C-S 4.77 / S-S 0.62 / SIO2-S 476.77 /  &
        AL2O3-S 476.77 / AS-S 0.06 / BA-S 0.04 / CD-S 2.63  &
        / CR-S 4.95 / PB-S 0.17 / SE-S 0.03 / AG-S 0.03

STREAM NAOH
    SUBSTREAM CISOLID TEMP=68 PRES=1 <ATM> MASS-FLOW=77.611
    MASS-FLOW NAOH-S 1

STREAM QNCH2O
    SUBSTREAM MIXED TEMP=68 PRES=1 <ATM> MASS-FLOW=1189
    MASS-FLOW H2O 1

STREAM SCRUBH2O
    SUBSTREAM MIXED TEMP=68 PRES=1 <ATM> MASS-FLOW=100
```

```
    MASS-FLOW H2O 1

STREAM SOIL
    SUBSTREAM MIXED TEMP=68 PRES=1 <ATM> MASS-FLOW=48.39
    MASS-FLOW H2O 62.5
    SUBSTREAM CISOLID TEMP=68 PRES=1 <ATM> MASS-FLOW=435.5
    MASS-FLOW SIO2-S 355.6 / AL2O3-S 63.75 / CACO3-S 80 /  &
        MGO-S 14.38 / NA2O-S 8.125 / K2O-S 15 / FE3O4-S  &
        25.63

STREAM WATER
    SUBSTREAM MIXED TEMP=68 PRES=1 <ATM> MASS-FLOW=59.57
    MASS-FLOW H2O 1

BLOCK BAGHOUSE SEP
    FRAC STREAM=FLYASH SUBSTREAM=MIXED COMPS=H2 O2 N2 CL2  &
        F2 NO SO2 H2O CO2 CO HCL CH4 C-S S-S S NAOH-S  &
        NACL-S NAF-S AS CD HG SE FE SIO2 AL2O3 FE-S SIO2-S  &
        AL2O3-S AS-S BA-S CD-S CR-S PB-S SE-S AG-S CACO3-S  &
        MGO-S NA2O-S K2O-S FE3O4 FE3O4-S CAO-S FRACS=0 0 0  &
        0 0 0 0 0 0 0 0 0 1 1 1 1 1 1 0 0 0 0 1 1  &
        1 1 1 1 0 1 0 1 1 0 1 1 1 1 1 1 1 1
    FRAC STREAM=FLYASH SUBSTREAM=CISOLID COMPS=C-S S-S NAOH-S  &
        NACL-S NAF-S FE-S SIO2-S AL2O3-S AS-S BA-S CD-S CR-S  &
        PB-S SE-S AG-S CACO3-S MGO-S NA2O-S K2O-S FE3O4-S  &
        CAO-S FRACS=1 1 1 1 1 1 1 1 0 1 0 1 1 0 1 1 1 1 1 1 1
    FRAC STREAM=HGPLUS SUBSTREAM=MIXED COMPS=H2 O2 N2 CL2  &
        F2 NO SO2 H2O CO2 CO HCL CH4 C-S S-S S NAOH-S  &
        NACL-S NAF-S AS CD HG SE FE SIO2 AL2O3 FE-S SIO2-S  &
        AL2O3-S AS-S BA-S CD-S CR-S PB-S SE-S AG-S CACO3-S  &
        MGO-S NA2O-S K2O-S FE3O4 FE3O4-S CAO-S FRACS=0 0 0  &
        0 0 0 0 0 0 0 0 0 0 0 0 0 0 0 1 1 1 1 0 0  &
        0 0 0 0 1 0 1 0 0 1 0 0 0 0 0 0 0 0
    FRAC STREAM=HGPLUS SUBSTREAM=CISOLID COMPS=C-S S-S NAOH-S  &
        NACL-S NAF-S FE-S SIO2-S AL2O3-S AS-S BA-S CD-S CR-S  &
        PB-S SE-S AG-S CACO3-S MGO-S NA2O-S K2O-S FE3O4-S  &
        CAO-S FRACS=0 0 0 0 0 0 0 0 1 0 1 0 0 1 0 0 0 0 0 0 0

BLOCK FEED-SEP SEP
    FRAC STREAM=SOLIDS SUBSTREAM=MIXED COMPS=H2 O2 N2 CL2  &
        F2 NO SO2 H2O CO2 CO HCL CH4 C-S S-S S NAOH-S  &
        NACL-S NAF-S AS CD HG SE FE SIO2 AL2O3 FE-S SIO2-S  &
        AL2O3-S AS-S BA-S CD-S CR-S PB-S SE-S AG-S CACO3-S  &
        MGO-S NA2O-S K2O-S FE3O4 FE3O4-S CAO-S FRACS=0 0 0  &
        0 0 0 0 0 0 0 0 0 .05 .05 .05 .95 .95 .95 .95  &
        .95 .95 .95 .95 .95 .95 .95 .95 .95 .95 .95 .95  &
        .95 .95 .95 .95 .95 .95 .95 .95 .95 .95 .95
    FRAC STREAM=SOLIDS SUBSTREAM=CISOLID COMPS=C-S S-S NAOH-S  &
        NACL-S NAF-S FE-S SIO2-S AL2O3-S AS-S BA-S CD-S CR-S  &
        PB-S SE-S AG-S CACO3-S MGO-S NA2O-S K2O-S FE3O4-S  &
        CAO-S FRACS=.05 .05 .95 .95 .95 .95 .95 .95 .95  &
        .95 .95 .95 .95 .95 .95 .95 .95 .95 .95 .95 .95

BLOCK SLAG-SEP SEP
    FRAC STREAM=METAL SUBSTREAM=MIXED COMPS=H2 O2 N2 CL2 F2  &
        NO SO2 H2O CO2 CO HCL CH4 C-S S-S S NAOH-S NACL-S  &
        NAF-S AS CD HG SE FE SIO2 AL2O3 FE-S SIO2-S AL2O3-S  &
        AS-S BA-S CD-S CR-S PB-S SE-S AG-S CACO3-S MGO-S  &
        NA2O-S K2O-S FE3O4 FE3O4-S CAO-S FRACS=0 0 0 0 0 0  &
        0 0 0 0 0 0 0 0 0 0 0 0 0 0 0 0 1 0 0 1 0  &
        0 0 1 0 1 1 0 1 0 0 0 0 0 0 0
    FRAC STREAM=METAL SUBSTREAM=CISOLID COMPS=C-S S-S NAOH-S  &
```

```
        NACL-S NAF-S FE-S SIO2-S AL2O3-S AS-S BA-S CD-S CR-S  &
        PB-S SE-S AG-S CACO3-S MGO-S NA2O-S K2O-S FE3O4-S  &
        CAO-S FRACS=0 0 0 0 0 1 0 0 0 1 0 1 1 0 1 0 0 0 0 0 0
    FRAC STREAM=SLAG SUBSTREAM=MIXED COMPS=H2 O2 N2 CL2 F2  &
        NO SO2 H2O CO2 CO HCL CH4 C-S S-S S NAOH-S NACL-S  &
        NAF-S AS CD HG SE FE SIO2 AL2O3 FE-S SIO2-S AL2O3-S  &
        AS-S BA-S CD-S CR-S PB-S SE-S AG-S CACO3-S MGO-S  &
        NA2O-S K2O-S FE3O4 FE3O4-S CAO-S FRACS=0 0 0 0 0 0  &
        0 0 0 0 0 0 1 1 1 1 1 1 0 0 0 0 0 1 1 0 1  &
        1 0 0 0 0 0 0 0 1 1 1 1 1 1 1
    FRAC STREAM=SLAG SUBSTREAM=CISOLID COMPS=C-S S-S NAOH-S  &
        NACL-S NAF-S FE-S SIO2-S AL2O3-S AS-S BA-S CD-S CR-S  &
        PB-S SE-S AG-S CACO3-S MGO-S NA2O-S K2O-S FE3O4-S  &
        CAO-S FRACS=1 1 1 1 1 0 1 1 0 0 0 0 0 0 0 1 1 1 1 1 1

BLOCK STEAMGEN HEATER
    PARAM TEMP=300 PRES=1 <ATM>

BLOCK L-V-SEP FLASH2
    PARAM TEMP=120 PRES=1 <ATM>

BLOCK CATALYST RSTOIC
    PARAM TEMP=1500 PRES=1 <ATM>
    STOIC 1 MIXED CO -1 / O2 -0.5 / CO2 1
    STOIC 2 MIXED H2 -1 / O2 -0.5 / H2O 1
    STOIC 3 MIXED O2 -2 / CH4 -1 / H2O 2 / CO2 1
    CONV 1 MIXED CO 1
    CONV 2 MIXED H2 1
    CONV 3 MIXED CH4 1

BLOCK GASIFIER RGIBBS
    PARAM TEMP=3000 PRES=1 <ATM> NPHASE=2
    PROD H2 / O2 / N2 / CL2 / F2 / NO / SO2 / H2O /  &
        CO2 / CO / HCL / CH4 / C-S SS / S-S SS / S /  &
        AS / CD / HG / SE / FE / SIO2 / AL2O3 / BA-S  &
        SS / CR-S SS / PB-S SS / AG-S SS / MGO-S SS /  &
        NA2O-S SS / K2O-S SS / FE3O4 / CAO-S SS

BLOCK PLENUM RGIBBS
    PARAM TEMP=1800 PRES=1 <ATM> NPHASE=2
    PROD H2 / O2 / N2 / CL2 / F2 / NO / SO2 / H2O /  &
        CO2 / CO / HCL / C-S SS / S-S SS / S / AS /  &
        CD / HG / SE / FE-S SS / SIO2-S SS / AL2O3-S SS  &
        / BA-S SS / CR-S SS / PB-S SS / AG-S SS / MGO-S  &
        SS / NA2O-S SS / K2O-S SS / FE3O4-S SS / CAO-S SS

BLOCK QUENCH RGIBBS
    PARAM TEMP=350 PRES=1 <ATM> NPHASE=2
    PROD H2 / O2 / N2 / CL2 / F2 / NO / SO2 / H2O /  &
        CO2 / CO / HCL / AS / CD / HG / SE / FE-S SS  &
        / SIO2-S SS / AL2O3-S SS / AS-S SS / BA-S SS /  &
        CD-S SS / CR-S SS / PB-S SS / SE-S SS / AG-S SS  &
        / MGO-S SS / NA2O-S SS / K2O-S SS / FE3O4-S SS /  &
        CAO-S SS

BLOCK SCRUB RGIBBS
    PARAM TEMP=120 PRES=1 <ATM> NPHASE=2
    PROD H2 / O2 / N2 / CL2 / F2 / NO / SO2 / H2O /  &
        CO2 / CO / HCL / NAOH-S SS / NACL-S SS / NAF-S SS

DESIGN-SPEC AIR
    DEFINE OXIN1 MASS-FLOW STREAM=AIR SUBSTREAM=MIXED  &
```

```
        COMPONENT=O2
    DEFINE OXIN2 MASS-FLOW STREAM=SCRUBVAP SUBSTREAM=MIXED  &
        COMPONENT=O2
    DEFINE OXOUT MASS-FLOW STREAM=EXHAUST SUBSTREAM=MIXED  &
        COMPONENT=O2
    SPEC "OXIN1+OXIN2" TO "OXOUT*2"
    TOL-SPEC ".01"
    VARY STREAM-VAR STREAM=AIR SUBSTREAM=MIXED  &
        VARIABLE=MASS-FLOW
    LIMITS "1" "20000"

DESIGN-SPEC NAOH
    DEFINE CAUIN MASS-FLOW STREAM=NAOH SUBSTREAM=CISOLID  &
        COMPONENT=NAOH-S
    DEFINE CAUOUT MASS-FLOW STREAM=SCRUBOUT SUBSTREAM=CISOLID  &
        COMPONENT=NAOH-S
    SPEC "CAUIN" TO "CAUOUT*100"
    TOL-SPEC "0.1"
    VARY STREAM-VAR STREAM=NAOH SUBSTREAM=CISOLID  &
        VARIABLE=MASS-FLOW
    LIMITS "1" "100"

DESIGN-SPEC QQUENCH
    DEFINE QQUENC BLOCK-VAR BLOCK=QUENCH VARIABLE=QCALC  &
        SENTENCE=PARAM
    SPEC "QQUENC" TO "0"
    TOL-SPEC "1."
    VARY STREAM-VAR STREAM=QNCH2O SUBSTREAM=MIXED  &
        VARIABLE=MASS-FLOW
    LIMITS "1" "10000"

DESIGN-SPEC SCRUBH2O
    DEFINE MASSAL STREAM-VAR STREAM=SCRUBBOT SUBSTREAM=CISOLID  &
        VARIABLE=MASS-FLOW
    DEFINE SCRUB STREAM-VAR STREAM=SCRUBH2O SUBSTREAM=MIXED  &
        VARIABLE=MASS-FLOW
    DEFINE NAOH STREAM-VAR STREAM=NAOH SUBSTREAM=CISOLID  &
        VARIABLE=MASS-FLOW
    SPEC "SCRUB" TO "20*MASSAL"
    TOL-SPEC "0.01"
    VARY STREAM-VAR STREAM=SCRUBH2O SUBSTREAM=MIXED  &
        VARIABLE=MASS-FLOW
    LIMITS "NAOH" "5000"

DESIGN-SPEC SOILH2O
    DEFINE SLAG1 STREAM-VAR STREAM=SLAG SUBSTREAM=MIXED  &
        VARIABLE=MASS-FLOW
    DEFINE SLAG2 STREAM-VAR STREAM=SLAG SUBSTREAM=CISOLID  &
        VARIABLE=MASS-FLOW
    DEFINE SOIL STREAM-VAR STREAM=SOIL SUBSTREAM=MIXED  &
        VARIABLE=MASS-FLOW
    SPEC "30.*SOIL" TO "SLAG1+SLAG2"
    TOL-SPEC "0.01"
    VARY STREAM-VAR STREAM=SOIL SUBSTREAM=MIXED  &
        VARIABLE=MASS-FLOW
    LIMITS "1" "1000"

DESIGN-SPEC SOILSOL
    DEFINE SLAG1 STREAM-VAR STREAM=SLAG SUBSTREAM=MIXED  &
        VARIABLE=MASS-FLOW
    DEFINE SLAG2 STREAM-VAR STREAM=SLAG SUBSTREAM=CISOLID  &
        VARIABLE=MASS-FLOW
```

```
    DEFINE SOIL STREAM-VAR STREAM=SOIL SUBSTREAM=CISOLID  &
        VARIABLE=MASS-FLOW
    SPEC "3.33333*SOIL" TO "SLAG1+SLAG2"
    TOL-SPEC "0.01"
    VARY STREAM-VAR STREAM=SOIL SUBSTREAM=CISOLID  &
        VARIABLE=MASS-FLOW
    LIMITS "1" "1000"

DESIGN-SPEC STEAM
    DEFINE H2OIN1 MASS-FLOW STREAM=STEAM SUBSTREAM=MIXED  &
        COMPONENT=H2O
    DEFINE H2OIN2 MASS-FLOW STREAM=ORGANICS SUBSTREAM=MIXED  &
        COMPONENT=H2O
    DEFINE H2OOUT MASS-FLOW STREAM=SYNGAS SUBSTREAM=MIXED  &
        COMPONENT=H2O
    SPEC "H2OIN1+H2OIN2" TO "H2OOUT*6.0"
    TOL-SPEC "0.1"
    VARY STREAM-VAR STREAM=WATER SUBSTREAM=MIXED  &
        VARIABLE=MASS-FLOW
    LIMITS "1" "100000"

CONV-OPTIONS
    SECANT MAX-STEP-SIZ=.05 BRACKET=YES

STREAM-REPOR NOSORT MOLEFLOW MASSFLOW PROPERTIES=ALL-SUBS
```

System D-1

```
TITLE  &
        'ITTS PHASE I - FIXED HEARTH W/ CO2 RETENTION - SYSD1-3(main)'

IN-UNITS ENG

DEF-STREAMS MIXCISLD ALL

DIAGNOSTICS
    TERMINAL SIM-LEVEL=8 CONV-LEVEL=8

RUN-CONTROL MAX-TIME=1800

DATABANKS COMBUST  / INORGANIC  / PURECOMP  / SOLIDS  /  &
        NOASPENPCD

PROP-SOURCES COMBUST  / INORGANIC  / PURECOMP  / SOLIDS

COMPONENTS
    H2 H2 H2 /
    O2 O2 O2 /
    N2 N2 N2 /
    CL2 CL2 CL2 /
    F2 F2 F2 /
    NO NO NO /
    SO2 O2S SO2 /
    H2O H2O H2O /
    CO2 CO2 CO2 /
    CO CO CO /
    HCL HCL HCL /
    CH4 CH4 CH4 /
    C-S C C-S /
    S-S S S-S /
    S S S /
    NAOH-S NAOH NAOH-S /
    NACL-S NACL NACL-S /
    NAF-S NAF NAF-S /
    AS AS AS /
    CD CD CD /
    HG HG HG /
    SE SE SE /
    FE FE FE /
    SIO2 SIO2 SIO2 /
    AL2O3 AL2O3 AL2O3 /
    FE-S FE FE-S /
    SIO2-S SIO2 SIO2-S /
    AL2O3-S AL2O3 AL2O3-S /
    AS-S AS AS-S /
    BA-S BA BA-S /
    CD-S CD CD-S /
    CR-S CR CR-S /
    PB-S PB PB-S /
    SE-S SE SE-S /
    AG-S AG AG-S /
    CACO3-S CACO3 CACO3-S /
    MGO-S MGO MGO-S /
    NA2O-S NA2O NA2O-S /
    K2O-S K2O K2O-S /
    FE3O4 FE3O4 FE3O4 /
    FE3O4-S FE3O4 FE3O4-S /
```

```
    CAO-S CAO CAO-S /
    CACL2-S CACL2 CACL2-S /
    CASO4-S CASO4 CASO4-S

FLOWSHEET
    BLOCK VITRIFY IN=FLYASH FDWASTEN SOIL ASH O2-VIT OUT= &
        VITOUT
    BLOCK SCC IN=FUEL-CH4 PYROVAP O2-SCC VITVAP COOLH2O OUT= &
        OUT2
    BLOCK BAGHOUSE IN=QUENCHED OUT=QNCHVAP HGPLUS FLYASH
    BLOCK SCRUBSEP IN=SCRUBOUT OUT=SCRUBVAP SCRUBBOT
    BLOCK ABSSEP IN=ABSORBED OUT=ABSSOL ABSGAS
    BLOCK CO2-DES IN=ABSSOL OUT=CO2-DES
    BLOCK FLASH IN=ABSGAS OUT=EXHAUST H2OOUT
    BLOCK CO2-SEP IN=CO2-DES OUT=CO2 CAO-OUT
    BLOCK SPLIT IN=CAO-OUT OUT=RECYCLE CAOSCRUB SPENTCAO
    BLOCK CAOMIXER IN=RECYCLE CAO-IN OUT=CAOMIXED
    BLOCK DRYSCRUB IN=CAOSCRUB QNCHVAP OUT=SCRUBOUT
    BLOCK QUENCH IN=SCCOUT QNCH2O OUT=QUENCHED
    BLOCK DUPL2 IN=OUT2 OUT=SCCOUT DUM2IN
    BLOCK Q2 IN=DUM2IN OUT=DUM2OUT
    BLOCK GASQUENC IN=QNCH2O-2 CO2 OUT=CO2OUT
    BLOCK CO2-ABS IN=SCRUBVAP CAOMIXED OUT=ABSORBED
    BLOCK EX-SPLIT IN=EXHAUST OUT=OFFGAS EX-RECYC
    BLOCK MELTER IN=FDMETMLT OUT=METAL
    BLOCK PYROLYZR IN=AIRLEAKS OXYGEN FDWASTEC EX-RECYC  &
        PYROH2O OUT=OUT1
    BLOCK PYRO-SEP IN=PYROOUT OUT=ASH PYROVAP
    BLOCK DUPL1 IN=OUT1 OUT=PYROOUT DUM1IN
    BLOCK Q1 IN=DUM1IN OUT=DUM1OUT
    BLOCK VIT-SEP IN=VITOUT OUT=VITVAP SLAG

PROPERTIES SOLIDS
    PROPERTIES IDEAL / RKS-BM

PROP-SET ALL-SUBS TEMP PRES VFRAC UNITS='ATM' SUBSTREAM=ALL

PROP-SET SET1 VLSTDMX UNITS='CUFT/HR' SUBSTREAM=MIXED

STREAM AIRLEAKS
    SUBSTREAM MIXED TEMP=68 PRES=1 <ATM> MASS-FLOW=224
    MASS-FRAC O2 0.233 / N2 0.767

STREAM CAO-IN
    SUBSTREAM CISOLID TEMP=68 PRES=1 <ATM> MASS-FLOW=172
    MASS-FRAC CAO-S 1

STREAM COOLH2O
    SUBSTREAM MIXED TEMP=68 PRES=1 <ATM> MASS-FLOW=1
    MASS-FLOW H2O 1

STREAM FDMETMLT
    SUBSTREAM MIXED TEMP=68 PRES=1 <ATM> MASS-FLOW=1.20
    MASS-FLOW H2 2.42
    SUBSTREAM CISOLID TEMP=68 PRES=1 <ATM> MASS-FLOW=147.80
    MASS-FLOW C-S 14.44 / FE-S 282.02 / SIO2-S 0.035 /  &
        AL2O3-S 0.035 / BA-S 0.87 / CD-S 0.18

STREAM FDWASTEC
    SUBSTREAM MIXED TEMP=68 PRES=1 <ATM>
    MASS-FLOW H2 50.95 / O2 92.76 / N2 0.23 / CL2 53.02 /  &
        F2 0.11 / H2O 19.83
```

```
    SUBSTREAM CISOLID TEMP=68 PRES=1 <ATM>
    MASS-FLOW C-S 326.28 / S-S 0.49 / FE-S 7.67 / SIO2-S  &
        53.01 / AL2O3-S 53.01 / BA-S 0.77 / CD-S 0.77 /  &
        CR-S 1.53

STREAM FDWASTEN
    SUBSTREAM MIXED TEMP=68 PRES=1 <ATM>
    MASS-FLOW H2 0.54 / O2 1.44 / N2 0.01 / CL2 14.88 /  &
        NO 0.66 / SO2 0.83 / H2O 354.23 / HG 0.15
    SUBSTREAM CISOLID TEMP=68 PRES=1 <ATM>
    MASS-FLOW C-S 4.77 / S-S 0.62 / SIO2-S 476.77 /  &
        AL2O3-S 476.77 / AS-S 0.06 / BA-S 0.04 / CD-S 2.63  &
        / CR-S 4.95 / PB-S 0.17 / SE-S 0.03 / AG-S 0.03

STREAM FUEL-CH4
    SUBSTREAM MIXED TEMP=68 PRES=1 <ATM> MASS-FLOW=1
    MASS-FRAC CH4 1

STREAM O2-SCC
    SUBSTREAM MIXED TEMP=68 PRES=1 <ATM> MASS-FLOW=2000
    MASS-FRAC O2 1

STREAM O2-VIT
    SUBSTREAM MIXED TEMP=68 PRES=1 <ATM> MASS-FLOW=1
    MASS-FRAC O2 1

STREAM OXYGEN
    SUBSTREAM MIXED TEMP=68 PRES=1 <ATM> MASS-FLOW=1
    MASS-FRAC O2 1

STREAM PYROH2O
    SUBSTREAM MIXED TEMP=68 PRES=1 <ATM> MASS-FLOW=10000
    MASS-FLOW H2O 1

STREAM QNCH2O
    SUBSTREAM MIXED TEMP=68 PRES=1 <ATM> MASS-FLOW=4430
    MASS-FRAC H2O 1

STREAM QNCH2O-2
    SUBSTREAM MIXED TEMP=68 PRES=1 <ATM> MASS-FLOW=100
    MASS-FRAC H2O 1

STREAM SOIL
    SUBSTREAM MIXED TEMP=68 PRES=1 <ATM> MASS-FLOW=62.5
    MASS-FLOW H2O .100
    SUBSTREAM CISOLID TEMP=68 PRES=1 <ATM> MASS-FLOW=562.5
    MASS-FLOW SIO2-S 0.569 / AL2O3-S 0.102 / CACO3-S 0.128 /  &
        MGO-S 0.023 / NA2O-S 0.013 / K2O-S 0.024 / FE3O4-S 0.041

BLOCK CAOMIXER MIXER
    PARAM PRES=1 <ATM> NPHASE=2

BLOCK EX-SPLIT FSPLIT
    FRAC EX-RECYC 0.90

BLOCK SPLIT FSPLIT
    FRAC RECYCLE 0.90 / CAOSCRUB 0.015

BLOCK ABSSEP SEP
    FRAC STREAM=ABSSOL SUBSTREAM=MIXED COMPS=H2 O2 N2 CL2  &
        F2 NO SO2 H2O CO2 CO HCL CH4 C-S S-S S NAOH-S  &
        NACL-S NAF-S AS CD HG SE FE SIO2 AL2O3 FE-S SIO2-S  &
```

```
        AL2O3-S AS-S BA-S CD-S CR-S PB-S SE-S AG-S CACO3-S  &
        MGO-S NA2O-S K2O-S FE3O4 FE3O4-S CAO-S CACL2-S CASO4-S  &
        FRACS=0 0 0 0 0 0 0 0 0 0 0 0 1 1 1 1 1 1  &
        1 1 1 1 1 1 1 1 1 1 1 1 1 1 1 1 1 1 1 1 1 1 1 1 1 1 1 1
    FRAC STREAM=ABSSOL SUBSTREAM=CISOLID COMPS=C-S S-S NAOH-S  &
        NACL-S NAF-S FE-S SIO2-S AL2O3-S AS-S BA-S CD-S CR-S  &
        PB-S SE-S AG-S CACO3-S MGO-S NA2O-S K2O-S FE3O4-S  &
        CAO-S CACL2-S CASO4-S FRACS=1 1 1 1 1 1 1 1 1 1  &
        1 1 1 1 1 1 1 1 1 1 1 1 1

BLOCK BAGHOUSE SEP
    FRAC STREAM=HGPLUS SUBSTREAM=MIXED COMPS=H2 O2 N2 CL2  &
        F2 NO SO2 H2O CO2 CO HCL CH4 C-S S-S S NAOH-S  &
        NACL-S NAF-S AS CD HG SE FE SIO2 AL2O3 FE-S SIO2-S  &
        AL2O3-S AS-S BA-S CD-S CR-S PB-S SE-S AG-S CACO3-S  &
        MGO-S NA2O-S K2O-S FE3O4 FE3O4-S CAO-S CACL2-S CASO4-S  &
        FRACS=0 0 0 0 0 0 0 0 0 0 0 0 0 0 0 0 0 0  &
        1 1 1 1 0 0 0 0 0 0 1 0 1 0 0 1 0 0 0 0 0 0 0 0 0 0
    FRAC STREAM=HGPLUS SUBSTREAM=CISOLID COMPS=C-S S-S NAOH-S  &
        NACL-S NAF-S FE-S SIO2-S AL2O3-S AS-S BA-S CD-S CR-S  &
        PB-S SE-S AG-S CACO3-S MGO-S NA2O-S K2O-S FE3O4-S  &
        CAO-S CACL2-S CASO4-S FRACS=0 0 0 0 0 0 0 0 1 0  &
        1 0 0 1 0 0 0 0 0 0 0 0 0
    FRAC STREAM=FLYASH SUBSTREAM=MIXED COMPS=H2 O2 N2 CL2  &
        F2 NO SO2 H2O CO2 CO HCL CH4 C-S S-S S NAOH-S  &
        NACL-S NAF-S AS CD HG SE FE SIO2 AL2O3 FE-S SIO2-S  &
        AL2O3-S AS-S BA-S CD-S CR-S PB-S SE-S AG-S CACO3-S  &
        MGO-S NA2O-S K2O-S FE3O4 FE3O4-S CAO-S CACL2-S CASO4-S  &
        FRACS=0 0 0 0 0 0 0 0 0 0 0 0 1 1 1 1 1 1  &
        0 0 0 0 1 1 1 1 1 1 0 1 0 1 1 0 1 1 1 1 1 1 1 1 1 1
    FRAC STREAM=FLYASH SUBSTREAM=CISOLID COMPS=C-S S-S NAOH-S  &
        NACL-S NAF-S FE-S SIO2-S AL2O3-S AS-S BA-S CD-S CR-S  &
        PB-S SE-S AG-S CACO3-S MGO-S NA2O-S K2O-S FE3O4-S  &
        CAO-S CACL2-S CASO4-S FRACS=1 1 1 1 1 1 1 1 0 1  &
        0 1 1 0 1 1 1 1 1 1 1 1 1
    FLASH-SPECS FLYASH TEMP=68 PRES=1 <ATM>

BLOCK CO2-SEP SEP
    FRAC STREAM=CO2 SUBSTREAM=MIXED COMPS=H2 O2 N2 CL2 F2  &
        NO SO2 H2O CO2 CO HCL CH4 C-S S-S S NAOH-S NACL-S  &
        NAF-S AS CD HG SE FE SIO2 AL2O3 FE-S SIO2-S AL2O3-S  &
        AS-S BA-S CD-S CR-S PB-S SE-S AG-S CACO3-S MGO-S  &
        NA2O-S K2O-S FE3O4 FE3O4-S CAO-S CACL2-S CASO4-S  &
        FRACS=0 0 0 0 0 0 0 0 1 0 0 0 0 0 0 0 0 0  &
        0 0 0 0 0 0 0 0 0 0 0 0 0 0 0 0 0 0 0 0 0 0 0 0 0 0
    FRAC STREAM=CO2 SUBSTREAM=CISOLID COMPS=C-S S-S NAOH-S  &
        NACL-S NAF-S FE-S SIO2-S AL2O3-S AS-S BA-S CD-S CR-S  &
        PB-S SE-S AG-S CACO3-S MGO-S NA2O-S K2O-S FE3O4-S  &
        CAO-S CACL2-S CASO4-S FRACS=0 0 0 0 0 0 0 0 0 0  &
        0 0 0 0 0 0 0 0 0 0 0 0 0
    FLASH-SPECS CAO-OUT TEMP=68 PRES=1 <ATM>

BLOCK PYRO-SEP SEP
    FRAC STREAM=ASH SUBSTREAM=MIXED COMPS=H2 O2 N2 CL2 F2  &
        NO SO2 H2O CO2 CO HCL CH4 C-S S-S S NAOH-S NACL-S  &
        NAF-S AS CD HG SE FE SIO2 AL2O3 FE-S SIO2-S AL2O3-S  &
        AS-S BA-S CD-S CR-S PB-S SE-S AG-S CACO3-S MGO-S  &
        NA2O-S K2O-S FE3O4 FE3O4-S CAO-S CACL2-S CASO4-S  &
        FRACS=0 0 0 0 0 0 0 0 0 0 0 0 .8 .8 0 .8 .8  &
        .8 0 0 0 0 .8 .8 .8 .8 .8 .8 .8 .8 .8 .8 .8 .8  &
        .8 .8 .8 .8 .8 .8 .8 .8 .8 .8 .8
    FRAC STREAM=ASH SUBSTREAM=CISOLID COMPS=C-S S-S NAOH-S  &
```

```
        NACL-S NAF-S FE-S SIO2-S AL2O3-S AS-S BA-S CD-S CR-S  &
        PB-S SE-S AG-S CACO3-S MGO-S NA2O-S K2O-S FE3O4-S  &
        CAO-S CACL2-S CASO4-S FRACS=.8 .8 .8 .8 .8 .8 .8  &
        .8 .8 .8 .8 .8 .8 .8 .8 .8 .8 .8 .8 .8 .8 .8 .8
    FLASH-SPECS ASH TEMP=68 PRES=1 <ATM>

BLOCK SCRUBSEP SEP
    FRAC STREAM=SCRUBBOT SUBSTREAM=MIXED COMPS=H2 O2 N2 CL2  &
        F2 NO SO2 H2O CO2 CO HCL CH4 C-S S-S S NAOH-S  &
        NACL-S NAF-S AS CD HG SE FE SIO2 AL2O3 FE-S SIO2-S  &
        AL2O3-S AS-S BA-S CD-S CR-S PB-S SE-S AG-S CACO3-S  &
        MGO-S NA2O-S K2O-S FE3O4 FE3O4-S CAO-S CACL2-S CASO4-S  &
        FRACS=0 0 0 0 0 0 0 0 0 0 0 0 1 1 0 1 1 1  &
        1 1 1 1 1 1 1 1 1 1 1 1 1 1 1 1 1 1 1 1 1 1 1 1 1 1 1
    FRAC STREAM=SCRUBBOT SUBSTREAM=CISOLID COMPS=C-S S-S  &
        NAOH-S NACL-S NAF-S FE-S SIO2-S AL2O3-S AS-S BA-S  &
        CD-S CR-S PB-S SE-S AG-S CACO3-S MGO-S NA2O-S K2O-S  &
        FE3O4-S CAO-S CACL2-S CASO4-S FRACS=1 1 1 1 1 1 1  &
        1 1 1 1 1 1 1 1 1 1 1 1 1 1 1 1 1

BLOCK VIT-SEP SEP
    FRAC STREAM=VITVAP SUBSTREAM=MIXED COMPS=H2 O2 N2 CL2  &
        F2 NO SO2 H2O CO2 CO HCL CH4 C-S S-S S NAOH-S  &
        NACL-S NAF-S AS CD HG SE FE SIO2 AL2O3 FE-S SIO2-S  &
        AL2O3-S AS-S BA-S CD-S CR-S PB-S SE-S AG-S CACO3-S  &
        MGO-S NA2O-S K2O-S FE3O4 FE3O4-S CAO-S CACL2-S CASO4-S  &
        FRACS=1 1 1 1 1 1 1 1 1 1 1 1 1 0 0 0 0 0 0  &
        1 1 1 1 0 0 0 0 0 0 0 0 0 0 0 0 0 0 0 0 0 0 0 0 0 0 0
    FRAC STREAM=VITVAP SUBSTREAM=CISOLID COMPS=C-S S-S NAOH-S  &
        NACL-S NAF-S FE-S SIO2-S AL2O3-S AS-S BA-S CD-S CR-S  &
        PB-S SE-S AG-S CACO3-S MGO-S NA2O-S K2O-S FE3O4-S  &
        CAO-S CACL2-S CASO4-S FRACS=0 0 0 0 0 0 0 0 0 0 0  &
        0 0 0 0 0 0 0 0 0 0 0 0 0 0

BLOCK Q1 HEATER
    PARAM TEMP=68 PRES=1 <ATM>

BLOCK FLASH FLASH2
    PARAM TEMP=90 PRES=1 <ATM> TOL=0.000001
    PROPERTIES IDEAL

BLOCK CO2-ABS RSTOIC
    PARAM TEMP=1200 PRES=1 <ATM> NPHASE=1 MAXIT=200  &
        TOL=0.000001
    STOIC 1 MIXED CO2 -1 / CISOLID CAO-S -1 / CACO3-S 1
    CONV 1 MIXED CO2 1
    BLOCK-OPTION RESTART=NO

BLOCK PYROLYZR RSTOIC
    PARAM TEMP=1200 PRES=1 <ATM>
    STOIC 1 CISOLID C-S -1 / MIXED O2 -0.5 / CO 1
    STOIC 2 MIXED O2 -2 / CH4 -1 / H2O 2 / CO2 1
    CONV 1 CISOLID C-S 0.99
    CONV 2 MIXED CH4 1

BLOCK CO2-DES RGIBBS
    PARAM TEMP=1700 PRES=1 <ATM> NPHASE=2
    PROD CO2 / CAO-S SS
    PROPERTIES IDEAL

BLOCK DRYSCRUB RGIBBS
    PARAM TEMP=350 PRES=1 <ATM> NPHASE=2 MAXIT=500
```

```
    PROD H2 / O2 / N2 / CL2 / F2 / NO / H2O / CO2 /  &
        CASO4-S SS / CACL2-S SS / CAO-S SS

BLOCK GASQUENC RGIBBS
    PARAM TEMP=350 PRES=1 <ATM> NPHASE=2 MAXIT=500
    PROD H2 / O2 / H2O / CO2 / CO / C-S SS
    PROD-FRAC H2 1 / O2 1 / H2O 1 / CO2 1

BLOCK MELTER RGIBBS
    PARAM TEMP=3000 PRES=1 <ATM> NPHASE=2
    PROD H2 / C-S SS / FE / SIO2 / AL2O3 / FE-S SS /  &
        SIO2-S SS / AL2O3-S SS / BA-S SS / CD / CD-S SS

BLOCK Q2 RGIBBS
    PARAM TEMP=68 PRES=1 <ATM> NPHASE=2 TAPP=2132
    PROD H2 / O2 / N2 / CL2 / F2 / NO / SO2 / H2O /  &
        CO2 / CO / HCL / CH4 / S / AS / CD / HG / SE  &
        / FE-S SS / SIO2-S SS / AL2O3-S SS / AS-S SS /  &
        BA-S SS / CD-S SS / CR-S SS / PB-S SS / SE-S SS  &
        / AG-S SS / MGO-S SS / NA2O-S SS / K2O-S SS / CAO-S SS

BLOCK QUENCH RGIBBS
    PARAM TEMP=350 PRES=1 <ATM> NPHASE=2
    PROD H2 / O2 / N2 / F2 / NO / SO2 / H2O / CO2 /  &
        CO / HCL / AS / CD / HG / SE / FE-S SS /  &
        SIO2-S SS / AL2O3-S SS / AS-S SS / BA-S SS /  &
        CD-S SS / CR-S SS / PB-S SS / SE-S SS / AG-S SS  &
        / MGO-S SS / NA2O-S SS / K2O-S SS / FE3O4-S SS / CAO-S SS

BLOCK SCC RGIBBS
    PARAM TEMP=2200 PRES=1 <ATM> NPHASE=2 MAXIT=150
    PROD H2 / O2 / N2 / CL2 / F2 / NO / SO2 / H2O /  &
        CO2 / CO / HCL / CH4 / S / AS / CD / HG / SE  &
        / FE-S SS / SIO2-S SS / AL2O3-S SS / AS-S SS /  &
        BA-S SS / CD-S SS / CR-S SS / PB-S SS / SE-S SS  &
        / AG-S SS / MGO-S SS / NA2O-S SS / K2O-S SS / CAO-S SS

BLOCK VITRIFY RGIBBS
    PARAM TEMP=3000 PRES=1 <ATM> NPHASE=2 CHEMEQ=YES MAXIT=500  &
        TOL=0.00001
    PROD H2 / O2 / N2 / CL2 / F2 / NO / SO2 / H2O /  &
        CO2 / CO / HCL / C-S SS / S / AS / CD / HG /  &
        SE / FE-S SS / SIO2 / AL2O3 / AS-S SS / BA-S SS  &
        / CD-S SS / CR-S SS / PB-S SS / SE-S SS / AG-S  &
        SS / MGO-S SS / NA2O-S SS / K2O-S SS / FE3O4-S  &
        SS / CAO-S SS
    PROD-FRAC FE-S 1 / FE3O4-S 1
    BLOCK-OPTION RESTART=YES

BLOCK DUPL1 DUPL

BLOCK DUPL2 DUPL

DESIGN-SPEC CAO
    DEFINE CO2CON MOLE-FLOW STREAM=SCRUBVAP SUBSTREAM=MIXED  &
        COMPONENT=CO2
    DEFINE CAOMXD MOLE-FLOW STREAM=CAOMIXED SUBSTREAM=CISOLID  &
        COMPONENT=CAO-S
    SPEC "CO2CON" TO "CAOMXD"
    TOL-SPEC "0.01"
    VARY STREAM-VAR STREAM=CAO-IN SUBSTREAM=CISOLID  &
        VARIABLE=MASS-FLOW
```

```
    LIMITS "1" "10000"

DESIGN-SPEC O2SCC
    DEFINE OXIN1 MASS-FLOW STREAM=O2-SCC SUBSTREAM=MIXED  &
        COMPONENT=O2
    DEFINE OXIN2 MASS-FLOW STREAM=PYROVAP SUBSTREAM=MIXED  &
        COMPONENT=O2
    DEFINE OXIN3 MASS-FLOW STREAM=VITVAP SUBSTREAM=MIXED  &
        COMPONENT=O2
    DEFINE OXOUT MASS-FLOW STREAM=SCCOUT SUBSTREAM=MIXED  &
        COMPONENT=O2
    SPEC "OXIN1+OXIN2+OXIN3" TO "6.0*OXOUT"
    TOL-SPEC "0.01"
    VARY STREAM-VAR STREAM=O2-SCC SUBSTREAM=MIXED  &
        VARIABLE=MASS-FLOW
    LIMITS "1" "100000"

DESIGN-SPEC O2VIT
    DEFINE OX1 MASS-FLOW STREAM=FDWASTEN SUBSTREAM=MIXED  &
        COMPONENT=O2
    DEFINE OX2 MASS-FLOW STREAM=O2-VIT SUBSTREAM=MIXED  &
        COMPONENT=O2
    DEFINE OX3 MASS-FLOW STREAM=SOIL SUBSTREAM=MIXED  &
        COMPONENT=O2
    DEFINE OXOUT MASS-FLOW STREAM=VITOUT SUBSTREAM=MIXED  &
        COMPONENT=O2
    SPEC "OX1+OX2+OX3" TO "6.0*OXOUT"
    TOL-SPEC "0.05"
    VARY STREAM-VAR STREAM=O2-VIT SUBSTREAM=MIXED  &
        VARIABLE=MASS-FLOW
    LIMITS "1" "10000"

DESIGN-SPEC OXYGEN
    DEFINE OX1 MASS-FLOW STREAM=OXYGEN SUBSTREAM=MIXED  &
        COMPONENT=O2
    DEFINE OX2 MASS-FLOW STREAM=EX-RECYC SUBSTREAM=MIXED  &
        COMPONENT=O2
    DEFINE OX3 MASS-FLOW STREAM=FDWASTEC SUBSTREAM=MIXED  &
        COMPONENT=O2
    DEFINE OX4 MASS-FLOW STREAM=AIRLEAKS SUBSTREAM=MIXED  &
        COMPONENT=O2
    DEFINE OX5 MASS-FLOW STREAM=PYROH20 SUBSTREAM=MIXED  &
        COMPONENT=O2
    DEFINE OXOUT MASS-FLOW STREAM=PYROOUT SUBSTREAM=MIXED  &
        COMPONENT=O2
    SPEC "OX1+OX2+OX3+OX4+(OX5/6)" TO "100.*OXOUT"
    TOL-SPEC "0.05"
    VARY STREAM-VAR STREAM=OXYGEN SUBSTREAM=MIXED  &
        VARIABLE=MASS-FLOW
    LIMITS "1" "100000"

DESIGN-SPEC QPYRO
    DEFINE QPYRO BLOCK-VAR BLOCK=PYROLYZR VARIABLE=QCALC  &
        SENTENCE=PARAM
    DEFINE Q1 BLOCK-VAR BLOCK=Q1 VARIABLE=QCALC SENTENCE=PARAM
    SPEC "QPYRO" TO "0.05*Q1"
    TOL-SPEC "1."
    VARY STREAM-VAR STREAM=PYROH20 SUBSTREAM=MIXED  &
        VARIABLE=MASS-FLOW
    LIMITS "1" "10000"

DESIGN-SPEC QQUENCH
```

```
    DEFINE QQUENC BLOCK-VAR BLOCK=QUENCH VARIABLE=QCALC  &
        SENTENCE=PARAM
    SPEC "QQUENC" TO "0"
    TOL-SPEC "1  "
    VARY STREAM-VAR STREAM=QNCH2O SUBSTREAM=MIXED  &
        VARIABLE=MASS-FLOW
    LIMITS "1" "100000"

DESIGN-SPEC QQUENCH2
    DEFINE QGASQU BLOCK-VAR BLOCK=GASQUENC VARIABLE=QCALC  &
        SENTENCE=PARAM
    SPEC "QGASQU" TO "0"
    TOL-SPEC "1."
    VARY STREAM-VAR STREAM=QNCH2O-2 SUBSTREAM=MIXED  &
        VARIABLE=MASS-FLOW
    LIMITS "1" "5000"

DESIGN-SPEC QSCC
    DEFINE QSCC BLOCK-VAR BLOCK=SCC VARIABLE=QCALC  &
        SENTENCE=PARAM
    DEFINE Q2 BLOCK-VAR BLOCK=Q2 VARIABLE=QCALC SENTENCE=PARAM
    SPEC "QSCC " TO "0.05*Q2"
    TOL-SPEC "1."
    VARY STREAM-VAR STREAM=COOLH2O SUBSTREAM=MIXED  &
        VARIABLE=MASS-FLOW
    LIMITS "1" "100000"

DESIGN-SPEC SCRUB
    DEFINE CAOIN MOLE-FLOW STREAM=CAOSCRUB SUBSTREAM=CISOLID  &
        COMPONENT=CAO-S
    DEFINE SO2IN MOLE-FLOW STREAM=QNCHVAP SUBSTREAM=MIXED  &
        COMPONENT=SO2
    DEFINE HCLIN MOLE-FLOW STREAM=QNCHVAP SUBSTREAM=MIXED  &
        COMPONENT=HCL
    SPEC "CAOIN-SO2IN-HCLIN/2" TO "0.01"
    TOL-SPEC "0.002"
    VARY BLOCK-VAR BLOCK=SPLIT SENTENCE=FRAC VARIABLE=FRAC  &
        ID1=CAOSCRUB
    LIMITS "0.00001" "0.10"

DESIGN-SPEC SOILH2O
    DEFINE SLAG1 STREAM-VAR STREAM=SLAG SUBSTREAM=MIXED  &
        VARIABLE=MASS-FLOW
    DEFINE SLAG2 STREAM-VAR STREAM=SLAG SUBSTREAM=CISOLID  &
        VARIABLE=MASS-FLOW
    DEFINE SOIL STREAM-VAR STREAM=SOIL SUBSTREAM=MIXED  &
        VARIABLE=MASS-FLOW
    SPEC "30.*SOIL" TO "SLAG1+SLAG2"
    TOL-SPEC "10"
    VARY STREAM-VAR STREAM=SOIL SUBSTREAM=MIXED  &
        VARIABLE=MASS-FLOW
    LIMITS "1" "1000"

DESIGN-SPEC SOILSOL
    DEFINE SLAG1 STREAM-VAR STREAM=SLAG SUBSTREAM=MIXED  &
        VARIABLE=MASS-FLOW
    DEFINE SLAG2 STREAM-VAR STREAM=SLAG SUBSTREAM=CISOLID  &
        VARIABLE=MASS-FLOW
    DEFINE SOIL STREAM-VAR STREAM=SOIL SUBSTREAM=CISOLID  &
        VARIABLE=MASS-FLOW
    SPEC "3.33333*SOIL" TO "SLAG1+SLAG2"
    TOL-SPEC "10"
```

```
    VARY STREAM-VAR STREAM=SOIL SUBSTREAM=CISOLID  &
        VARIABLE=MASS-FLOW
    LIMITS "1 " "1000"

CONV-OPTIONS
    PARAM TOL=0.001 OPT-METHOD=COMPLEX MSPEC-METHOD=NEWTON
    WEGSTEIN MAXIT=200 QMAX=0.5
    SECANT MAX-STEP-SIZ=.05 BRACKET=NO

CONVERGENCE C-1 NEWTON
    SPEC O2SCC

CONVERGENCE C-2 NEWTON
    SPEC QPYRO

STREAM-REPOR NOSORT MOLEFLOW MASSFLOW PROPERTIES=SET1 ALL-SUBS
```

System E-1

```
TITLE 'ITTS PHASE I - THERMAL DESORPTION - MODEL SYSE1-4 (main)'

IN-UNITS ENG

DEF-STREAMS MIXCISLD ALL

DIAGNOSTICS
    TERMINAL SIM-LEVEL=8 CONV-LEVEL=8

SIM-OPTIONS MW-CALC=YES

RUN-CONTROL MAX-TIME=1800

DATABANKS COMBUST  / INORGANIC  / PURECOMP  / SOLIDS  /  &
        NOASPENPCD

PROP-SOURCES COMBUST  / INORGANIC  / PURECOMP  / SOLIDS

COMPONENTS
    H2 H2 H2 /
    O2 O2 O2 /
    N2 N2 N2 /
    CL2 CL2 CL2 /
    F2 F2 F2 /
    NO NO NO /
    SO2 O2S SO2 /
    H2O H2O H2O /
    CO2 CO2 CO2 /
    CO CO CO /
    HCL HCL HCL /
    CH4 CH4 CH4 /
    C-S C C-S /
    S-S S S-S /
    S S S /
    NAOH-S NAOH NAOH-S /
    NACL-S NACL NACL-S /
    NAF-S NAF NAF-S /
    AS AS AS /
    CD CD CD /
    HG HG HG /
    SE SE SE /
    FE FE FE /
    SIO2 SIO2 SIO2 /
    AL2O3 AL2O3 AL2O3 /
    FE-S FE FE-S /
    SIO2-S SIO2 SIO2-S /
    AL2O3-S AL2O3 AL2O3-S /
    AS-S AS AS-S /
    BA-S BA BA-S /
    CD-S CD CD-S /
    CR-S CR CR-S /
    PB-S PB PB-S /
    SE-S SE SE-S /
    AG-S AG AG-S /
    CACO3-S CACO3 CACO3-S /
    MGO-S MGO MGO-S /
    NA2O-S NA2O NA2O-S /
    K2O-S K2O K2O-S /
    FE3O4 FE3O4 FE3O4 /
```

```
    FE3O4-S FE3O4 FE3O4-S /
    CAO-S CAO CAO-S

FLOWSHEET
    BLOCK KILN IN=SOIL FUELMIX1 FDWASTEC AIR AIRLEAKS COOLH2O  &
        CONDENSD OUT=OUT1
    BLOCK KILNSEP IN=KILNOUT OUT=ASH KILNVAP
    BLOCK SCC IN=KILNVAP FUELMIX2 OUT=OUT2
    BLOCK BAGHOUSE IN=QUENCHED OUT=HGPLUS FLYASH QNCHVAP
    BLOCK QUENCH IN=SCCOUT QNCH2O OUT=QUENCHED
    BLOCK L-V-SEP IN=SCRUBOUT OUT=SCRUBVAP SCRUBBOT
    BLOCK DUPL1 IN=OUT1 OUT=KILNOUT DUM1IN
    BLOCK Q1 IN=DUM1IN OUT=DUM1OUT
    BLOCK DUPL2 IN=OUT2 OUT=SCCOUT DUM2IN
    BLOCK Q2 IN=DUM2IN OUT=DUM2OUT
    BLOCK VITRIFY IN=FLYASH ASH OUT=VITOUT
    BLOCK SCRUB IN=QNCHVAP NAOH SCRUBH2O OUT=SCRUBOUT
    BLOCK DESORBER IN=FDWASTEN OUT=DESORBED
    BLOCK CONDENSR IN=DESRBVAP OUT=CONDENSD
    BLOCK SEPARATR IN=DESORBED OUT=DESRBVAP SOLIDS
    BLOCK MELTER IN=FDMETMLT OUT=METAL
    BLOCK L-V-SEP2 IN=VITOUT OUT=VIT-VAP SLAG
    BLOCK HEATER IN=FUELMIX3 OUT=EXHAUST3

PROPERTIES SOLIDS
    PROPERTIES IDEAL / RKS-BM

PROP-SET ALL-SUBS TEMP PRES VFRAC UNITS='ATM' SUBSTREAM=ALL

PROP-SET PSLIQ CPMX HMX UNITS='BTU/LB-R' 'J/KG-K' 'BTU/LB'  &
        'J/KG' SUBSTREAM=MIXED PHASE=L

PROP-SET PSSOL CPMX HMX UNITS='BTU/LB-R' 'J/KG-K' 'BTU/LB'  &
        'J/KG' SUBSTREAM=CISOLID PHASE=S

PROP-SET PSVAP CPMX HMX UNITS='BTU/LB-R' 'J/KG-K' 'BTU/LB'  &
        'J/KG' SUBSTREAM=MIXED PHASE=V

STREAM AIR
    SUBSTREAM MIXED TEMP=68 PRES=1 <ATM> MASS-FLOW=7766.243
    MASS-FRAC O2 0.233 / N2 0.767

STREAM AIRLEAKS
    SUBSTREAM MIXED TEMP=68 PRES=1 <ATM>  &
        VOLUME-FLOW=600 <CUFT/MIN>
    MASS-FRAC O2 0.233 / N2 0.767

STREAM COOLH2O
    SUBSTREAM MIXED TEMP=68 PRES=1 <ATM> MASS-FLOW=909.895
    MASS-FRAC H2O 1

STREAM FDMETMLT
    SUBSTREAM MIXED TEMP=68 PRES=1 <ATM> MASS-FLOW=1.20
    MASS-FLOW H2 2.42
    SUBSTREAM CISOLID TEMP=68 PRES=1 <ATM> MASS-FLOW=147.80
    MASS-FLOW C-S 14.44 / FE-S 282.02 / SIO2-S 0.035 /  &
        AL2O3-S 0.035 / BA-S 0.87 / CD-S 0.18

STREAM FDWASTEC
    SUBSTREAM MIXED TEMP=68 PRES=1 <ATM>
    MASS-FLOW H2 50.95 / O2 92.76 / N2 0.23 / CL2 53.02 /  &
        F2 0.11 / H2O 19.83
```

```
    SUBSTREAM CISOLID TEMP=68 PRES=1 <ATM>
    MASS-FLOW C-S 326.28 / S-S 0.49 / FE-S 7.67 / SIO2-S  &
        53.01 / AL2O3-S 53.01 / BA-S 0.77 / CD-S 0.77 / CR-S 1.53

STREAM FDWASTEN
    SUBSTREAM MIXED TEMP=68 PRES=1 <ATM>
    MASS-FLOW H2 0.54 / O2 1.44 / N2 0.01 / CL2 14.88 /  &
        NO 0.66 / SO2 0.83 / H2O 354.23 / HG 0.15
    SUBSTREAM CISOLID TEMP=68 PRES=1 <ATM>
    MASS-FLOW C-S 4.77 / S-S 0.62 / SIO2-S 476.77 /  &
        AL2O3-S 476.77 / AS-S 0.06 / BA-S 0.04 / CD-S 2.63  &
        / CR-S 4.95 / PB-S 0.17 / SE-S 0.03 / AG-S 0.03

STREAM FUELMIX1
    SUBSTREAM MIXED TEMP=68 PRES=1 <ATM> MASS-FLOW=1
    MASS-FRAC O2 0.222 / N2 0.732 / CH4 0.046

STREAM FUELMIX2
    SUBSTREAM MIXED TEMP=68 PRES=1 <ATM> MASS-FLOW=9285.13
    MASS-FRAC O2 0.222 / N2 0.732 / CH4 0.046

STREAM FUELMIX3
    SUBSTREAM MIXED TEMP=68 PRES=1 <ATM> MASS-FLOW=994.065
    MASS-FLOW O2 0.222 / N2 0.732 / CH4 0.046

STREAM NAOH
    SUBSTREAM MIXED TEMP=68 PRES=1 <ATM>
    SUBSTREAM CISOLID TEMP=68 PRES=1 <ATM> MASS-FLOW=64.046
    MASS-FLOW NAOH-S 1

STREAM QNCH2O
    SUBSTREAM MIXED TEMP=68 PRES=1 <ATM> MASS-FLOW=10407.226
    MASS-FRAC H2O 1

STREAM SCRUBH2O
    SUBSTREAM MIXED TEMP=68 PRES=1 <ATM> MASS-FLOW=1
    MASS-FRAC H2O 1

STREAM SOIL
    SUBSTREAM MIXED TEMP=68 PRES=1 <ATM> MASS-FLOW=5.37917
    MASS-FLOW H2O 0.1
    SUBSTREAM CISOLID TEMP=68 PRES=1 <ATM> MASS-FLOW=48.4125
    MASS-FLOW SIO2-S 0.569 / AL2O3-S 0.102 / CACO3-S 0.128 /  &
        MGO-S 0.023 / NA2O-S 0.013 / K2O-S 0.024 / FE3O4-S 0.041

BLOCK BAGHOUSE SEP
    FRAC STREAM=HGPLUS SUBSTREAM=MIXED COMPS=H2 O2 N2 CL2  &
        F2 NO SO2 H2O CO2 CO HCL CH4 C-S S-S S NAOH-S  &
        NACL-S NAF-S AS CD HG SE FE SIO2 AL2O3 FE-S SIO2-S  &
        AL2O3-S AS-S BA-S CD-S CR-S PB-S SE-S AG-S CACO3-S  &
        MGO-S NA2O-S K2O-S FE3O4 FE3O4-S CAO-S FRACS=0 0 0  &
        0 0 0 0 0 0 0 0 0 0 0 0 0 0 0 1 1 1 1 0 0  &
        0 0 0 0 1 0 1 0 0 1 0 0 0 0 0 0 0 0
    FRAC STREAM=HGPLUS SUBSTREAM=CISOLID COMPS=C-S S-S NAOH-S  &
        NACL-S NAF-S FE-S SIO2-S AL2O3-S AS-S BA-S CD-S CR-S  &
        PB-S SE-S AG-S CACO3-S MGO-S NA2O-S K2O-S FE3O4-S  &
        CAO-S FRACS=0 0 0 0 0 0 0 0 1 0 1 0 0 1 0 0 0 0 0 0 0
    FRAC STREAM=FLYASH SUBSTREAM=MIXED COMPS=H2 O2 N2 CL2  &
        F2 NO SO2 H2O CO2 CO HCL CH4 C-S S-S S NAOH-S  &
        NACL-S NAF-S AS CD HG SE FE SIO2 AL2O3 FE-S SIO2-S  &
        AL2O3-S AS-S BA-S CD-S CR-S PB-S SE-S AG-S CACO3-S  &
        MGO-S NA2O-S K2O-S FE3O4 FE3O4-S CAO-S FRACS=0 0 0  &
```

```
        0 0 0 0 0 0 0 0 0 1 1 1 1 1 1 0 0 0 0 1 1  &
        1 1 1 1 0 1 0 1 1 0 1 1 1 1 1 1 1 1
    FRAC STREAM=FLYASH SUBSTREAM=CISOLID COMPS=C-S S-S NAOH-S  &
        NACL-S NAF-S FE-S SIO2-S AL2O3-S AS-S BA-S CD-S CR-S  &
        PB-S SE-S AG-S CACO3-S MGO-S NA2O-S K2O-S FE3O4-S  &
        CAO-S FRACS=1 1 1 1 1 1 1 1 0 1 0 1 1 0 1 1 1 1 1 1 1
    FLASH-SPECS FLYASH TEMP=68 PRES=1 <ATM>

BLOCK KILNSEP SEP
    FRAC STREAM=ASH SUBSTREAM=MIXED COMPS=H2 O2 N2 CL2 F2  &
        NO SO2 H2O CO2 CO HCL CH4 C-S S-S S NAOH-S NACL-S  &
        NAF-S AS CD HG SE FE SIO2 AL2O3 FE-S SIO2-S AL2O3-S  &
        AS-S BA-S CD-S CR-S PB-S SE-S AG-S CACO3-S MGO-S  &
        NA2O-S K2O-S FE3O4 FE3O4-S CAO-S FRACS=0 0 0 0 0 0  &
        0 0 0 0 0 0 .8 .8 0 .8 .8 .8 0 0 0 0 .8 .8  &
        .8 .8 .8 .8 .8 .8 .8 .8 .8 .8 .8 .8 .8 .8 .8 .8 .8 .8
    FRAC STREAM=ASH SUBSTREAM=CISOLID COMPS=C-S S-S NAOH-S  &
        NACL-S NAF-S FE-S SIO2-S AL2O3-S AS-S BA-S CD-S CR-S  &
        PB-S SE-S AG-S CACO3-S MGO-S NA2O-S K2O-S FE3O4-S  &
        CAO-S FRACS=.8 .8 .8 .8 .8 .8 .8 .8 .8 .8 .8 .8  &
        .8 .8 .8 .8 .8 .8 .8 .8 .8
    FLASH-SPECS ASH TEMP=68 PRES=1 <ATM>

BLOCK SEPARATR SEP
    FRAC STREAM=SOLIDS SUBSTREAM=MIXED COMPS=H2 O2 N2 CL2  &
        F2 NO SO2 H2O CO2 CO HCL CH4 C-S S-S S NAOH-S  &
        NACL-S NAF-S AS CD HG SE FE SIO2 AL2O3 FE-S SIO2-S  &
        AL2O3-S AS-S BA-S CD-S CR-S PB-S SE-S AG-S CACO3-S  &
        MGO-S NA2O-S K2O-S FE3O4 FE3O4-S CAO-S FRACS=.8 .8  &
        .8 .8 .8 .8 .8 .2 .8 .8 .8 .8 .8 1 1 1 1 1 0  &
        0 0 0 1 1 1 1 1 1 1 1 1 1 1 1 1 1 1 1 1 1 1 1 1
    FRAC STREAM=SOLIDS SUBSTREAM=CISOLID COMPS=C-S S-S NAOH-S  &
        NACL-S NAF-S FE-S SIO2-S AL2O3-S AS-S BA-S CD-S CR-S  &
        PB-S SE-S AG-S CACO3-S MGO-S NA2O-S K2O-S FE3O4-S  &
        CAO-S FRACS=.8 1 1 1 1 1 1 1 1 1 1 1 1 1 1 1 1 1 1 1 1

BLOCK L-V-SEP FLASH2
    PARAM TEMP=120 PRES=1 <ATM>

BLOCK L-V-SEP2 FLASH2
    PARAM TEMP=3000 PRES=1 <ATM>

BLOCK CONDENSR RGIBBS
    PARAM TEMP=80 PRES=1 <ATM> NPHASE=2
    PROD H2 / O2 / N2 / CL2 / F2 / NO / SO2 / H2O /  &
        C-S SS / S-S SS / S / AS / CD / HG / SE /  &
        FE-S SS / SIO2-S SS / AL2O3-S SS / AS-S SS /  &
        BA-S SS / CD-S SS / CR-S SS / PB-S SS / SE-S SS / AG-S SS
    PROD-FRAC H2 1 / O2 1 / H2O 1

BLOCK DESORBER RGIBBS
    PARAM TEMP=600 PRES=1 <ATM> NPHASE=2
    PROD H2 / O2 / N2 / CL2 / F2 / NO / SO2 / H2O /  &
        C-S SS / S-S SS / S / AS / CD / HG / SE /  &
        FE-S SS / SIO2-S SS / AL2O3-S SS / AS-S SS /  &
        BA-S SS / CD-S SS / CR-S SS / PB-S SS / SE-S SS / AG-S SS
    PROD-FRAC H2 1 / O2 1 / H2O 1

BLOCK HEATER RGIBBS
    PARAM TEMP=1400 PRES=1 <ATM> NPHASE=2

BLOCK KILN RGIBBS
```

```
    PARAM TEMP=1600 PRES=1 <ATM> NPHASE=2 MAXIT=500
    PROD H2 / O2 / N2 / CL2 / F2 / NO / SO2 / H2O /  &
        CO2 / CO / HCL / AS / CD / HG / SE / FE-S SS  &
        / SIO2-S SS / AL2O3-S SS / AS-S SS / BA-S SS /  &
        CD-S SS / CR-S SS / PB-S SS / SE-S SS / AG-S SS  &
        / MGO-S SS / NA2O-S SS / K2O-S SS / FE3O4-S SS / CAO-S SS
    PROD-FRAC FE-S 1 / FE3O4-S 1
    BLOCK-OPTION RESTART=NO

BLOCK MELTER RGIBBS
    PARAM TEMP=3000 PRES=1 <ATM> NPHASE=2
    PROD H2 / C-S SS / FE / SIO2 / AL2O3 / FE-S SS /  &
        SIO2-S SS / AL2O3-S SS / BA-S SS / CD / CD-S SS

BLOCK Q1 RGIBBS
    PARAM TEMP=68 PRES=1 <ATM> NPHASE=2 TAPP=1532 MAXIT=500
    PROD H2 / O2 / N2 / CL2 / F2 / NO / SO2 / H2O /  &
        CO2 / CO / HCL / AS / CD / HG / SE / FE-S SS  &
        / SIO2-S SS / AL2O3-S SS / AS-S SS / BA-S SS /  &
        CD-S SS / CR-S SS / PB-S SS / SE-S SS / AG-S SS  &
        / MGO-S SS / NA2O-S SS / K2O-S SS / FE3O4-S SS / CAO-S SS
    PROD-FRAC FE-S 1 / FE3O4-S 1
    BLOCK-OPTION RESTART=NO

BLOCK Q2 RGIBBS
    PARAM TEMP=68 PRES=1 <ATM> NPHASE=2 CHEMEQ=YES TAPP=2132  &
        MAXIT=60
    PROD O2 / N2 / CL2 / F2 / NO / SO2 / H2O / CO2 /  &
        CO / HCL / CH4 / S / AS / CD / HG / SE /  &
        FE-S SS / SIO2-S SS / AL2O3-S SS / BA-S SS /  &
        CR-S SS / PB-S SS / AG-S SS / MGO-S SS / NA2O-S  &
        SS / K2O-S SS / FE3O4-S SS / CAO-S SS
    PROD-FRAC FE-S 1 / FE3O4-S 1
    BLOCK-OPTION RESTART=NO

BLOCK QUENCH RGIBBS
    PARAM TEMP=350 PRES=1 <ATM> NPHASE=2
    PROD H2 / O2 / N2 / F2 / NO / SO2 / H2O / CO2 /  &
        CO / HCL / AS / CD / HG / SE / FE-S SS /  &
        SIO2-S SS / AL2O3-S SS / AS-S SS / BA-S SS /  &
        CD-S SS / CR-S SS / PB-S SS / SE-S SS / AG-S SS  &
        / MGO-S SS / NA2O-S SS / K2O-S SS / FE3O4-S SS / CAO-S SS
    PROD-FRAC FE-S 1 / FE3O4-S 1
    BLOCK-OPTION RESTART=NO

BLOCK SCC RGIBBS
    PARAM TEMP=2200 PRES=1 <ATM> NPHASE=2
    PROD H2 / O2 / N2 / CL2 / F2 / NO / SO2 / H2O /  &
        CO2 / CO / HCL / CH4 / S / AS / CD / HG / SE  &
        / FE-S SS / SIO2-S SS / AL2O3-S SS / BA-S SS /  &
        CR-S SS / PB-S SS / AG-S SS / MGO-S SS / NA2O-S  &
        SS / K2O-S SS / FE3O4-S SS / CAO-S SS
    PROD-FRAC FE-S 1 / FE3O4-S 1
    BLOCK-OPTION RESTART=NO

BLOCK SCRUB RGIBBS
    PARAM TEMP=120 PRES=1 <ATM> NPHASE=2
    PROD H2 / O2 / N2 / CL2 / F2 / NO / SO2 / H2O /  &
        CO2 / CO / HCL / NAOH-S SS / NACL-S SS / NAF-S SS

BLOCK VITRIFY RGIBBS
    PARAM TEMP=3000 PRES=1 <ATM> NPHASE=2
```

```
    PROD H2 / O2 / N2 / CL2 / F2 / NO / SO2 / H2O /  &
        CO2 / CO / HCL / C-S SS / S / AS / CD / HG /  &
        SE / FE-S SS / SIO2 / AL2O3 / AS-S SS / BA-S SS  &
        / CD-S SS / CR-S SS / PB-S SS / SE-S SS / AG-S  &
        SS / MGO-S SS / NA2O-S SS / K2O-S SS / FE3O4-S  &
        SS / CAO-S SS
    PROD-FRAC FE-S 1 / FE3O4-S 1
    BLOCK-OPTION RESTART=NO

BLOCK DUPL1 DUPL

BLOCK DUPL2 DUPL

DESIGN-SPEC NAOH
    DEFINE CAUIN MASS-FLOW STREAM=NAOH SUBSTREAM=CISOLID  &
        COMPONENT=NAOH-S
    DEFINE CAUOUT MASS-FLOW STREAM=SCRUBOUT SUBSTREAM=CISOLID  &
        COMPONENT=NAOH-S
    SPEC "CAUIN-100.*CAUOUT" TO "0"
    TOL-SPEC "0.01"
    VARY STREAM-VAR STREAM=NAOH SUBSTREAM=CISOLID  &
        VARIABLE=MASS-FLOW
    LIMITS "1 " "5000"

DESIGN-SPEC OXI
    DEFINE AIR MASS-FLOW STREAM=AIR SUBSTREAM=MIXED  &
        COMPONENT=O2
    DEFINE WC MASS-FLOW STREAM=FDWASTEC SUBSTREAM=MIXED  &
        COMPONENT=O2
    DEFINE F1 MASS-FLOW STREAM=FUELMIX1 SUBSTREAM=MIXED  &
        COMPONENT=O2
    DEFINE OXOUT MASS-FLOW STREAM=KILNOUT SUBSTREAM=MIXED  &
        COMPONENT=O2
    DEFINE AL MASS-FLOW STREAM=AIRLEAKS SUBSTREAM=MIXED  &
        COMPONENT=O2
    SPEC "AL+AIR+WC+(F1/6.0)" TO "2.0*OXOUT"
    TOL-SPEC "0.1"
    VARY STREAM-VAR STREAM=AIR SUBSTREAM=MIXED  &
        VARIABLE=MASS-FLOW
    LIMITS "1" "10000"

DESIGN-SPEC QHEATER
    DEFINE QIN BLOCK-VAR BLOCK=DESORBER VARIABLE=QCALC  &
        SENTENCE=PARAM
    DEFINE QOUT BLOCK-VAR BLOCK=HEATER VARIABLE=QCALC  &
        SENTENCE=PARAM
    SPEC "1.05*QIN+QOUT" TO "0"
    TOL-SPEC "1."
    VARY STREAM-VAR STREAM=FUELMIX3 SUBSTREAM=MIXED  &
        VARIABLE=MASS-FLOW
    LIMITS "1" "10000"

DESIGN-SPEC QKILN
    DEFINE QKILN BLOCK-VAR BLOCK=KILN VARIABLE=QCALC  &
        SENTENCE=PARAM
    DEFINE Q1 BLOCK-VAR BLOCK=Q1 VARIABLE=QCALC SENTENCE=PARAM
    SPEC "QKILN" TO "0.05*Q1"
    TOL-SPEC "1."
    VARY STREAM-VAR STREAM=COOLH2O SUBSTREAM=MIXED  &
        VARIABLE=MASS-FLOW
    LIMITS "1" "50000"
```

```
DESIGN-SPEC QQUENCH
    DEFINE QQNCH BLOCK-VAR BLOCK=QUENCH VARIABLE=QCALC  &
        SENTENCE=PARAM
    SPEC "QQNCH" TO "0"
    TOL-SPEC "1."
    VARY STREAM-VAR STREAM=QNCH2O SUBSTREAM=MIXED  &
        VARIABLE=MASS-FLOW
    LIMITS "1" "1000000"

DESIGN-SPEC QSCC
    DEFINE QSCC BLOCK-VAR BLOCK=SCC VARIABLE=QCALC  &
        SENTENCE=PARAM
    DEFINE Q2 BLOCK-VAR BLOCK=Q2 VARIABLE=QCALC SENTENCE=PARAM
    SPEC "QSCC" TO "0.05*Q2"
    TOL-SPEC "1."
    VARY STREAM-VAR STREAM=FUELMIX2 SUBSTREAM=MIXED  &
        VARIABLE=MASS-FLOW
    LIMITS "1" "100000"

DESIGN-SPEC SCRUBH2O
    DEFINE MASSAL STREAM-VAR STREAM=SCRUBBOT SUBSTREAM=CISOLID  &
        VARIABLE=MASS-FLOW
    DEFINE SCRUB STREAM-VAR STREAM=SCRUBH2O SUBSTREAM=MIXED  &
        VARIABLE=MASS-FLOW
    DEFINE NAOH STREAM-VAR STREAM=NAOH SUBSTREAM=CISOLID  &
        VARIABLE=MASS-FLOW
    SPEC "SCRUB" TO "20*MASSAL"
    TOL-SPEC "0.01"
    VARY STREAM-VAR STREAM=SCRUBH2O SUBSTREAM=MIXED  &
        VARIABLE=MASS-FLOW
    LIMITS "NAOH" "5000"

DESIGN-SPEC SOILH2O
    DEFINE SLAG1 STREAM-VAR STREAM=SLAG SUBSTREAM=MIXED  &
        VARIABLE=MASS-FLOW
    DEFINE SLAG2 STREAM-VAR STREAM=SLAG SUBSTREAM=CISOLID  &
        VARIABLE=MASS-FLOW
    DEFINE SOIL STREAM-VAR STREAM=SOIL SUBSTREAM=MIXED  &
        VARIABLE=MASS-FLOW
    SPEC "30.*SOIL" TO "SLAG1+SLAG2"
    TOL-SPEC "0.01"
    VARY STREAM-VAR STREAM=SOIL SUBSTREAM=MIXED  &
        VARIABLE=MASS-FLOW
    LIMITS "1" "1000"

DESIGN-SPEC SOILSOL
    DEFINE SLAG1 STREAM-VAR STREAM=SLAG SUBSTREAM=MIXED  &
        VARIABLE=MASS-FLOW
    DEFINE SLAG2 STREAM-VAR STREAM=SLAG SUBSTREAM=CISOLID  &
        VARIABLE=MASS-FLOW
    DEFINE SOIL STREAM-VAR STREAM=SOIL SUBSTREAM=CISOLID  &
        VARIABLE=MASS-FLOW
    SPEC "3.33333*SOIL" TO "SLAG1+SLAG2"
    TOL-SPEC "0.01"
    VARY STREAM-VAR STREAM=SOIL SUBSTREAM=CISOLID  &
        VARIABLE=MASS-FLOW
    LIMITS "1" "1000"

CONV-OPTIONS
    SECANT MAX-STEP-SIZ=.05 BRACKET=YES

STREAM-REPOR NOSORT MOLEFLOW MASSFLOW PROPERTIES=ALL-SUBS
```

System F-1

```
TITLE  &
        'ITTS PHASE II - MOLTEN SALT OXIDATION - MODEL SYSF1-4 (main)'

IN-UNITS ENG

DEF-STREAMS MIXCISLD ALL

RUN-CONTROL MAX-TIME=1800

DESCRIPTION "MSO ACCEPTS COMBUSTIBLE WASTE ONLY.
        NON-COMBUSTIBLES GO TO VITRIFICATION.
        For MOD 2, SCRUBBER CHANGED TO RGIBBS RATHER THAN RADFRAC.
        MOD 3: AIR INTO MSO, ADD SOIL DESIGN SPEC. "

DATABANKS COMBUST  / INORGANIC  / PURECOMP  / SOLIDS  /  &
        NOASPENPCD

PROP-SOURCES COMBUST  / INORGANIC  / PURECOMP  / SOLIDS

COMPONENTS
    H2 H2 H2 /
    O2 O2 O2 /
    N2 N2 N2 /
    CL2 CL2 CL2 /
    F2 F2 F2 /
    NO NO NO /
    SO2 O2S SO2 /
    H2O H2O H2O /
    CO2 CO2 CO2 /
    CO CO CO /
    HCL HCL HCL /
    CH4 CH4 CH4 /
    C-S C C-S /
    S-S S S-S /
    S S S /
    NAOH-S NAOH NAOH-S /
    NACL-S NACL NACL-S /
    NAF-S NAF NAF-S /
    AS AS AS /
    CD CD CD /
    HG HG HG /
    SE SE SE /
    FE FE FE /
    SIO2 SIO2 SIO2 /
    AL2O3 AL2O3 AL2O3 /
    FE-S FE FE-S /
    SIO2-S SIO2 SIO2-S /
    AL2O3-S AL2O3 AL2O3-S /
    AS-S AS AS-S /
    BA-S BA BA-S /
    CD-S CD CD-S /
    CR-S CR CR-S /
    PB-S PB PB-S /
    SE-S SE SE-S /
    AG-S AG AG-S /
    CACO3-S CACO3 CACO3-S /
    MGO-S MGO MGO-S /
    NA2O-S NA2O NA2O-S /
    K2O-S K2O K2O-S /
```

```
    FE3O4 FE3O4 FE3O4 /
    FE3O4-S FE3O4 FE3O4-S /
    CAO-S CAO CAO-S /
    NA2CO3 NA2CO3 NA2CO3 /
    NA2SO4 NA2SO4 NA2SO4 /
    H2SO4 H2SO4 H2SO4 /
    NA2CO3-S NA2CO3 NA2CO3-S /
    NA2SO4-S NA2SO4 NA2SO4-S

FLOWSHEET
    BLOCK VITRIFY IN=SOLIDS OUT=VITOUT
    BLOCK VIT-SEP IN=VITOUT OUT=VITVAP SLAG
    BLOCK SCC2 IN=FUELMIX2 EFFLUENT OUT=OUT2
    BLOCK QUENCH IN=QNCH2O OFFGAS OUT=QUENCHED
    BLOCK BAGHOUSE IN=QUENCHED OUT=FLYASH HGPLUS VAPOR
    BLOCK Q2 IN=DUM2IN OUT=DUM2OUT
    BLOCK DUPL2 IN=OUT2 OUT=SCCOUT2 DUM2IN
    BLOCK MELTER IN=FDMETMLT OUT=METAL
    BLOCK MSO IN=AIR FDWASTEC SALT-IN SALT-90 OUT=MSO-OUT
    BLOCK MSO-SEP IN=MSO-OUT OUT=MSO-BOT OFFGAS
    BLOCK SALT-SEP IN=MSO-BOT OUT=SALTS ASH SALT-90
    BLOCK SCRUB IN=NAOH SCRUBH2O VAPOR OUT=SCRUBOUT
    BLOCK L-V-SEP IN=SCRUBOUT OUT=SCRUBVAP SCRUBBOT
    BLOCK QUENCH2 IN=SCCOUT2 QNCH2O-2 OUT=QUENCHD2
    BLOCK BAGHSE2 IN=QUENCHD2 OUT=FILTGAS2 HGPLUS2 FLYASH2
    BLOCK FEED-SEP IN=ASH FLYASH SOIL FDWASTEN FLYASH2 OUT= &
        SOLIDS ORGANICS
    BLOCK PLENUM IN=ORGANICS VITVAP OXYGEN OUT=EFFLUENT
    BLOCK L-V-SEP2 IN=SCRBOUT2 OUT=SCRBVAP2 SCRBBOT2
    BLOCK SCRUB-2 IN=SCRBH2O2 NAOH-2 FILTGAS2 OUT=SCRBOUT2

PROPERTIES SOLIDS
    PROPERTIES IDEAL / RKS-BM

PROP-SET ALL-SUBS TEMP PRES VFRAC UNITS='ATM' SUBSTREAM=ALL

STREAM AIR
    SUBSTREAM MIXED TEMP=68.0 PRES=1 <ATM> MASS-FLOW=6120
    MASS-FRAC O2 0.233 / N2 0.767

STREAM FDMETMLT
    SUBSTREAM MIXED TEMP=68 PRES=1 <ATM> MASS-FLOW=1.20
    MASS-FLOW H2 1.20
    SUBSTREAM CISOLID TEMP=67 PRES=1 <ATM> MASS-FLOW=147.8
    MASS-FLOW C-S 14.44 / FE-S 282.02 / SIO2-S 0.035 /  &
        AL2O3-S 0.035 / BA-S 0.87 / CD-S 0.18

STREAM FDWASTEC
    SUBSTREAM MIXED TEMP=68 PRES=1 <ATM>
    MASS-FLOW H2 50.95 / O2 92.76 / N2 0.23 / CL2 53.02 /  &
        F2 0.11 / H2O 19.83
    SUBSTREAM CISOLID TEMP=68 PRES=1 <ATM>
    MASS-FLOW C-S 326.28 / S-S 0.49 / FE-S 7.67 / SIO2-S  &
        53.01 / AL2O3-S 53.01 / BA-S 0.77 / CD-S 0.77 / CR-S 1.53

STREAM FDWASTEN
    SUBSTREAM MIXED TEMP=68 PRES=1 <ATM>
    MASS-FLOW H2 0.54 / O2 1.44 / N2 0.01 / CL2 14.88 /  &
        NO 0.66 / SO2 0.83 / H2O 354.23 / HG 0.15
    SUBSTREAM CISOLID TEMP=68 PRES=1 <ATM>
    MASS-FLOW C-S 4.77 / S-S 0.62 / SIO2-S 476.77 /  &
        AL2O3-S 476.77 / AS-S 0.06 / BA-S 0.04 / CD-S 2.63  &
```

```
        / CR-S 4.95 / PB-S 0.17 / SE-S 0.03 / AG-S 0.03

STREAM FUELMIX2
    SUBSTREAM MIXED TEMP=68 PRES=1 <ATM> MASS-FLOW=519.6
    MASS-FRAC O2 0.222 / N2 0.732 / CH4 0.046

STREAM NAOH
    SUBSTREAM CISOLID TEMP=68.0 PRES=1 <ATM> MASS-FLOW=0.1453
    MASS-FRAC NAOH-S 1

STREAM NAOH-2
    SUBSTREAM CISOLID TEMP=68 PRES=1 <ATM> MASS-FLOW=16.96
    MASS-FRAC NAOH-S 1

STREAM OXYGEN
    SUBSTREAM MIXED TEMP=68 PRES=1 <ATM> MASS-FLOW=14.71
    MASS-FRAC O2 1

STREAM QNCH2O
    SUBSTREAM MIXED TEMP=68.0 PRES=14.695949 MASS-FLOW=2114
    MASS-FRAC H2O 1.0

STREAM QNCH2O-2
    SUBSTREAM MIXED TEMP=68 PRES=1 <ATM> MASS-FLOW=658.9
    MASS-FRAC H2O 1

STREAM SALT-IN
    SUBSTREAM CISOLID TEMP=68.0 PRES=1 <ATM> MASS-FLOW=120.8
    MASS-FRAC NA2CO3-S 1

STREAM SCRBH2O2
    SUBSTREAM MIXED TEMP=68 PRES=1 <ATM> MASS-FLOW=5000
    MASS-FRAC H2O 1

STREAM SCRUBH2O
    SUBSTREAM MIXED TEMP=68 PRES=1 <ATM> MASS-FLOW=71000
    MASS-FRAC H2O 1

STREAM SOIL
    SUBSTREAM MIXED TEMP=68 PRES=1 <ATM> MASS-FLOW=50.01
    MASS-FLOW H2O .100
    SUBSTREAM CISOLID TEMP=68 PRES=1 <ATM> MASS-FLOW=450.09
    MASS-FLOW SIO2-S 0.569 / AL2O3-S 0.102 / CACO3-S 0.128 /  &
        MGO-S 0.023 / NA2O-S 0.013 / K2O-S 0.024 / FE3O4-S 0.041

BLOCK BAGHOUSE SEP
    FRAC STREAM=FLYASH SUBSTREAM=MIXED COMPS=H2 O2 N2 CL2  &
        F2 NO SO2 H2O CO2 CO HCL CH4 C-S S-S S NAOH-S  &
        NACL-S NAF-S AS CD HG SE FE SIO2 AL2O3 FE-S SIO2-S  &
        AL2O3-S AS-S BA-S CD-S CR-S PB-S SE-S AG-S CACO3-S  &
        MGO-S NA2O-S K2O-S FE3O4 FE3O4-S CAO-S NA2CO3 NA2SO4  &
        H2SO4 NA2CO3-S NA2SO4-S FRACS=0 0 0 0 0 0 0 0 0 0  &
        0 0 0 1 1 1 1 1 1 0 0 0 0 1 1 1 1 1 1 0 1  &
        0 1 1 0 1 1 1 1 1 1 1 1 1 1 0 1 1
    FRAC STREAM=FLYASH SUBSTREAM=CISOLID COMPS=C-S S-S NAOH-S  &
        NACL-S NAF-S FE-S SIO2-S AL2O3-S AS-S BA-S CD-S CR-S  &
        PB-S SE-S AG-S CACO3-S MGO-S NA2O-S K2O-S FE3O4-S  &
        CAO-S NA2CO3-S NA2SO4-S FRACS=1 1 1 1 1 1 1 1 0  &
        1 0 1 1 0 1 1 1 1 1 1 1 1 1
    FRAC STREAM=HGPLUS SUBSTREAM=MIXED COMPS=H2 O2 N2 CL2  &
        F2 NO SO2 H2O CO2 CO HCL CH4 C-S S-S S NAOH-S  &
        NACL-S NAF-S AS CD HG SE FE SIO2 AL2O3 FE-S SIO2-S  &
```

```
        AL2O3-S AS-S BA-S CD-S CR-S PB-S SE-S AG-S CACO3-S  &
        MGO-S NA2O-S K2O-S FE3O4 FE3O4-S CAO-S NA2CO3 NA2SO4  &
        H2SO4 NA2CO3-S NA2SO4-S FRACS=0 0 0 0 0 0 0 0 0 0  &
        0 0 0 0 0 0 0 0 0 1 1 1 1 0 0 0 0 0 0 1 0  &
        1 0 0 1 0 0 0 0 0 0 0 0 0 0 0 0 0
    FRAC STREAM=HGPLUS SUBSTREAM=CISOLID COMPS=C-S S-S NAOH-S  &
        NACL-S NAF-S FE-S SIO2-S AL2O3-S AS-S BA-S CD-S CR-S  &
        PB-S SE-S AG-S CACO3-S MGO-S NA2O-S K2O-S FE3O4-S  &
        CAO-S NA2CO3-S NA2SO4-S FRACS=0 0 0 0 0 0 0 0 1  &
        0 1 0 0 1 0 0 0 0 0 0 0 0 0

BLOCK BAGHSE2 SEP
    FRAC STREAM=FILTGAS2 SUBSTREAM=MIXED COMPS=H2 O2 N2 CL2  &
        F2 NO SO2 H2O CO2 CO HCL CH4 C-S S-S S NAOH-S  &
        NACL-S NAF-S AS CD HG SE FE SIO2 AL2O3 FE-S SIO2-S  &
        AL2O3-S AS-S BA-S CD-S CR-S PB-S SE-S AG-S CACO3-S  &
        MGO-S NA2O-S K2O-S FE3O4 FE3O4-S CAO-S NA2CO3 NA2SO4  &
        H2SO4 NA2CO3-S NA2SO4-S FRACS=1 1 1 1 1 1 1 1 1  &
        1 1 1 0 0 0 0 0 0 0 0 0 0 0 0 0 0 0 0 0 0  &
        0 0 0 0 0 0 0 0 0 0 0 0 0 0 1 0 0
    FRAC STREAM=FILTGAS2 SUBSTREAM=CISOLID COMPS=C-S S-S  &
        NAOH-S NACL-S NAF-S FE-S SIO2-S AL2O3-S AS-S BA-S  &
        CD-S CR-S PB-S SE-S AG-S CACO3-S MGO-S NA2O-S K2O-S  &
        FE3O4-S CAO-S NA2CO3-S NA2SO4-S FRACS=0 0 0 0 0 0  &
        0 0 0 0 0 0 0 0 0 0 0 0 0 0 0 0 0
    FRAC STREAM=HGPLUS2 SUBSTREAM=MIXED COMPS=H2 O2 N2 CL2  &
        F2 NO SO2 H2O CO2 CO HCL CH4 C-S S-S S NAOH-S  &
        NACL-S NAF-S AS CD HG SE FE SIO2 AL2O3 FE-S SIO2-S  &
        AL2O3-S AS-S BA-S CD-S CR-S PB-S SE-S AG-S CACO3-S  &
        MGO-S NA2O-S K2O-S FE3O4 FE3O4-S CAO-S NA2CO3 NA2SO4  &
        H2SO4 NA2CO3-S NA2SO4-S FRACS=0 0 0 0 0 0 0 0 0  &
        0 0 0 0 0 0 0 0 0 1 1 1 1 0 0 0 0 0 0 1 0  &
        1 0 0 1 0 0 0 0 0 0 0 0 0 0 0 0 0
    FRAC STREAM=HGPLUS2 SUBSTREAM=CISOLID COMPS=C-S S-S  &
        NAOH-S NACL-S NAF-S FE-S SIO2-S AL2O3-S AS-S BA-S  &
        CD-S CR-S PB-S SE-S AG-S CACO3-S MGO-S NA2O-S K2O-S  &
        FE3O4-S CAO-S NA2CO3-S NA2SO4-S FRACS=0 0 0 0 0 0  &
        0 0 1 0 1 0 0 1 0 0 0 0 0 0 0 0 0

BLOCK FEED-SEP SEP
    FRAC STREAM=SOLIDS SUBSTREAM=MIXED COMPS=H2 O2 N2 CL2  &
        F2 NO SO2 H2O CO2 CO HCL CH4 C-S S-S S NAOH-S  &
        NACL-S NAF-S AS CD HG SE FE SIO2 AL2O3 FE-S SIO2-S  &
        AL2O3-S AS-S BA-S CD-S CR-S PB-S SE-S AG-S CACO3-S  &
        MGO-S NA2O-S K2O-S FE3O4 FE3O4-S CAO-S NA2CO3 NA2SO4  &
        H2SO4 NA2CO3-S NA2SO4-S FRACS=0 0 0 0 0 0 0 0 0  &
        0 0 0 .05 .05 .05 .95 .95 .95 .95 .95 .95 .95  &
        .95 .95 .95 .95 .95 .95 .95 .95 .95 .95 .95 .95  &
        .95 .95 .95 .95 .95 .95 .95 .95 .95 .95 .95 .95
    FRAC STREAM=SOLIDS SUBSTREAM=CISOLID COMPS=C-S S-S NAOH-S  &
        NACL-S NAF-S FE-S SIO2-S AL2O3-S AS-S BA-S CD-S CR-S  &
        PB-S SE-S AG-S CACO3-S MGO-S NA2O-S K2O-S FE3O4-S  &
        CAO-S NA2CO3-S NA2SO4-S FRACS=.05 .05 .95 .95 .95  &
        .95 .95 .95 .95 .95 .95 .95 .95 .95 .95 .95 .95  &
        .95 .95 .95 .95 .95 .95

BLOCK MSO-SEP SEP
    FRAC STREAM=OFFGAS SUBSTREAM=MIXED COMPS=H2 O2 N2 CL2  &
        F2 NO SO2 H2O CO2 CO HCL CH4 C-S S-S S NAOH-S  &
        NACL-S NAF-S AS CD HG SE FE SIO2 AL2O3 FE-S SIO2-S  &
        AL2O3-S AS-S BA-S CD-S CR-S PB-S SE-S AG-S CACO3-S  &
        MGO-S NA2O-S K2O-S FE3O4 FE3O4-S CAO-S NA2CO3 NA2SO4  &
```

```
        H2SO4 NA2CO3-S NA2SO4-S FRACS=1 1 1 1 1 1 1 1 1  &
        1 1 1 0 0 1 0 0 0 1 1 1 1 0 0 0 0 0 0 1 0  &
        1 0 0 1 0 0 0 0 0 0 0 0 0 0 0 1 0 0
    FRAC STREAM=OFFGAS SUBSTREAM=CISOLID COMPS=C-S S-S NAOH-S  &
        NACL-S NAF-S FE-S SIO2-S AL2O3-S AS-S BA-S CD-S CR-S  &
        PB-S SE-S AG-S CACO3-S MGO-S NA2O-S K2O-S FE3O4-S  &
        CAO-S NA2CO3-S NA2SO4-S FRACS=0 0 0 0 0 0 0 0 1  &
        0 1 0 0 1 0 0 0 0 0 0 0 0 0
    FLASH-SPECS MSO-BOT TEMP=68 PRES=1 <ATM>

BLOCK SALT-SEP SEP
    FRAC STREAM=ASH SUBSTREAM=MIXED COMPS=H2 O2 N2 CL2 F2  &
        NO SO2 H2O CO2 CO HCL CH4 C-S S-S S NAOH-S NACL-S  &
        NAF-S AS CD HG SE FE SIO2 AL2O3 FE-S SIO2-S AL2O3-S  &
        AS-S BA-S CD-S CR-S PB-S SE-S AG-S CACO3-S MGO-S  &
        NA2O-S K2O-S FE3O4 FE3O4-S CAO-S NA2CO3 NA2SO4 H2SO4  &
        NA2CO3-S NA2SO4-S FRACS=1 1 1 1 1 1 1 1 1 1 1 1  &
        1 1 1 1 0 0 1 1 1 1 1 1 1 1 1 1 1 1 1 1 1 1  &
        1 1 1 1 1 1 1 1 1 1 0 1 1 0 1
    FRAC STREAM=ASH SUBSTREAM=CISOLID COMPS=C-S S-S NAOH-S  &
        NACL-S NAF-S FE-S SIO2-S AL2O3-S AS-S BA-S CD-S CR-S  &
        PB-S SE-S AG-S CACO3-S MGO-S NA2O-S K2O-S FE3O4-S  &
        CAO-S NA2CO3-S NA2SO4-S FRACS=1 1 1 0 0 1 1 1 1  &
        1 1 1 1 1 1 1 1 1 1 1 1 0 1
    FRAC STREAM=SALT-90 SUBSTREAM=MIXED COMPS=H2 O2 N2 CL2  &
        F2 NO SO2 H2O CO2 CO HCL CH4 C-S S-S S NAOH-S  &
        NACL-S NAF-S AS CD HG SE FE SIO2 AL2O3 FE-S SIO2-S  &
        AL2O3-S AS-S BA-S CD-S CR-S PB-S SE-S AG-S CACO3-S  &
        MGO-S NA2O-S K2O-S FE3O4 FE3O4-S CAO-S NA2CO3 NA2SO4  &
        H2SO4 NA2CO3-S NA2SO4-S FRACS=0 0 0 0 0 0 0 0 0 0  &
        0 0 0 0 0 0 0 0 0 0 0 0 0 0 0 0 0 0 0 0 0 0  &
        0 0 0 0 0 0 0 0 0 0 0 0 0.90 0 0 0.90 0
    FRAC STREAM=SALT-90 SUBSTREAM=CISOLID COMPS=C-S S-S  &
        NAOH-S NACL-S NAF-S FE-S SIO2-S AL2O3-S AS-S BA-S  &
        CD-S CR-S PB-S SE-S AG-S CACO3-S MGO-S NA2O-S K2O-S  &
        FE3O4-S CAO-S NA2CO3-S NA2SO4-S FRACS=0 0 0 0 0 0  &
        0 0 0 0 0 0 0 0 0 0 0 0 0 0 0 0 0.90 0

BLOCK VIT-SEP SEP
    FRAC STREAM=SLAG SUBSTREAM=MIXED COMPS=H2 O2 N2 CL2 F2  &
        NO SO2 H2O CO2 CO HCL CH4 C-S S-S S NAOH-S NACL-S  &
        NAF-S AS CD HG SE FE SIO2 AL2O3 FE-S SIO2-S AL2O3-S  &
        AS-S BA-S CD-S CR-S PB-S SE-S AG-S CACO3-S MGO-S  &
        NA2O-S K2O-S FE3O4 FE3O4-S CAO-S NA2CO3 NA2SO4 H2SO4  &
        NA2CO3-S NA2SO4-S FRACS=0 0 0 0 0 0 0 0 0 0 0 0  &
        1 1 1 1 1 1 0 0 0 0 1 1 1 1 1 1 1 1 1 1 1  &
        1 1 1 1 1 1 1 1 1 1 1 1 1 1 1
    FRAC STREAM=SLAG SUBSTREAM=CISOLID COMPS=C-S S-S NAOH-S  &
        NACL-S NAF-S FE-S SIO2-S AL2O3-S AS-S BA-S CD-S CR-S  &
        PB-S SE-S AG-S CACO3-S MGO-S NA2O-S K2O-S FE3O4-S  &
        CAO-S NA2CO3-S NA2SO4-S FRACS=1 1 1 1 1 1 1 1 1  &
        1 1 1 1 1 1 1 1 1 1 1 1 1 1 1

BLOCK L-V-SEP FLASH2
    PARAM TEMP=120 PRES=1 <ATM>

BLOCK L-V-SEP2 FLASH2
    PARAM TEMP=120 PRES=1 <ATM>

BLOCK MELTER RGIBBS
    PARAM TEMP=3000 PRES=1 <ATM> NPHASE=2 VAPOR=YES MAXIT=500
    PROD H2 / C-S SS / FE / SIO2 / AL2O3 / FE-S SS /  &
```

```
        SIO2-S SS / AL2O3-S SS / BA-S SS / CD / CD-S SS

BLOCK MSO RGIBBS
    PARAM TEMP=1652.0 PRES=1 <ATM> NPHASE=2 MAXIT=100
    PROD H2 / O2 / N2 / CL2 / F2 / NO / SO2 / H2O /  &
        CO2 / CO / HCL / CH4 / S / NAOH-S SS / NACL-S  &
        SS / NAF-S SS / AS / CD / HG / SE / FE / SIO2  &
        / AL2O3 / FE-S SS / SIO2-S SS / AL2O3-S SS /  &
        AS-S SS / BA-S SS / CD-S SS / CR-S SS / PB-S SS  &
        / SE-S SS / AG-S SS / NA2O-S SS / FE3O4 /  &
        FE3O4-S SS / NA2CO3 / NA2SO4 / H2SO4 / NA2CO3-S SS  &
        / NA2SO4-S SS

BLOCK PLENUM RGIBBS
    PARAM TEMP=1800 PRES=1 <ATM> NPHASE=2
    PROD H2 / O2 / N2 / CL2 / F2 / NO / SO2 / H2O /  &
        CO2 / CO / HCL / C-S SS / S-S SS / S / AS /  &
        CD / HG / SE / FE-S SS / SIO2-S SS / AL2O3-S SS  &
        / BA-S SS / CR-S SS / PB-S SS / AG-S SS / MGO-S  &
        SS / NA2O-S SS / K2O-S SS / FE3O4-S SS / CAO-S SS

BLOCK Q2 RGIBBS
    PARAM TEMP=68 PRES=1 <ATM> NPHASE=2 TAPP=2132
    PROD H2 / O2 / N2 / CL2 / F2 / NO / SO2 / H2O /  &
        CO2 / CO / HCL / AS / CD / HG / SE / FE-S SS  &
        / SIO2-S SS / AL2O3-S SS / BA-S SS / CR-S SS /  &
        PB-S SS / SE-S SS / AG-S SS / MGO-S SS / NA2O-S  &
        SS / K2O-S SS / FE3O4-S SS / CAO-S SS

BLOCK QUENCH RGIBBS
    PARAM TEMP=350 PRES=1 <ATM> NPHASE=2 MAXIT=500
    PROD H2 / O2 / N2 / CL2 / SO2 / H2O / CO2 / CO / HCL / CD

BLOCK QUENCH2 RGIBBS
    PARAM TEMP=350 PRES=1 <ATM> NPHASE=2
    PROD H2 / O2 / N2 / CL2 / F2 / NO / SO2 / H2O /  &
        CO2 / CO / HCL / AS / CD / HG / SE / FE-S SS  &
        / SIO2-S SS / AL2O3-S SS / AS-S SS / BA-S SS /  &
        CD-S SS / CR-S SS / PB-S SS / SE-S SS / AG-S SS  &
        / MGO-S SS / NA2O-S SS / K2O-S SS / FE3O4-S SS / CAO-S SS

BLOCK SCC2 RGIBBS
    PARAM TEMP=2200 PRES=1 <ATM> NPHASE=2
    PROD H2 M / O2 M / N2 M / CL2 M / F2 M / NO M /  &
        SO2 M / H2O M / CO2 M / CO M / HCL / AS / CD  &
        / HG / SE / FE-S SS / SIO2-S SS / AL2O3-S SS /  &
        BA-S SS / CR-S SS / PB-S SS / AG-S SS / MGO-S  &
        SS / NA2O-S SS / K2O-S SS / FE3O4-S SS / CAO-S SS

BLOCK SCRUB RGIBBS
    PARAM TEMP=120 PRES=1 <ATM> NPHASE=2 MAXIT=500
    PROD H2 / O2 / N2 / CL2 / F2 / NO / SO2 / H2O /  &
        CO2 / CO / HCL / C-S SS / S-S SS / NAOH-S SS / NACL-S SS

BLOCK SCRUB-2 RGIBBS
    PARAM TEMP=120 PRES=1 <ATM> NPHASE=2 MAXIT=500
    PROD H2 / O2 / N2 / CL2 / F2 / NO / SO2 / H2O /  &
        CO2 / CO / HCL / C-S SS / S-S SS / NAOH-S SS / NACL-S SS

BLOCK VITRIFY RGIBBS
    PARAM TEMP=3000 PRES=1 <ATM> NPHASE=2 MAXIT=50
    PROD H2 / O2 / N2 / CL2 / F2 / NO / SO2 / H2O /  &
```

```
        CO2 / CO / HCL / C-S SS / S / AS / CD / HG /  &
        SE / FE / SIO2 / AL2O3 / BA-S SS / CR-S SS /  &
        PB-S SS / AG-S SS / MGO-S SS / NA2O-S SS / K2O-S  &
        SS / FE3O4 / CAO-S SS

BLOCK DUPL2 DUPL

DESIGN-SPEC SCRBH2O2
    DEFINE MASSAL STREAM-VAR STREAM=SCRBBOT2 SUBSTREAM=CISOLID  &
        VARIABLE=MASS-FLOW
    DEFINE SCRUB STREAM-VAR STREAM=SCRBH2O2 SUBSTREAM=MIXED  &
        VARIABLE=MASS-FLOW
    DEFINE NAOH STREAM-VAR STREAM=NAOH-2 SUBSTREAM=CISOLID  &
        VARIABLE=MASS-FLOW
    SPEC "SCRUB" TO "20*MASSAL"
    TOL-SPEC "0.01"
    VARY STREAM-VAR STREAM=SCRBH2O2 SUBSTREAM=MIXED  &
        VARIABLE=MASS-FLOW
    LIMITS "NAOH" "5000"

DESIGN-SPEC SCRUBH2O
    DEFINE MASSAL STREAM-VAR STREAM=SCRUBBOT SUBSTREAM=CISOLID  &
        VARIABLE=MASS-FLOW
    DEFINE SCRUB STREAM-VAR STREAM=SCRUBH2O SUBSTREAM=MIXED  &
        VARIABLE=MASS-FLOW
    DEFINE NAOH STREAM-VAR STREAM=NAOH SUBSTREAM=CISOLID  &
        VARIABLE=MASS-FLOW
    SPEC "SCRUB" TO "20*MASSAL"
    TOL-SPEC "0.01"
    VARY STREAM-VAR STREAM=SCRUBH2O SUBSTREAM=MIXED  &
        VARIABLE=MASS-FLOW
    LIMITS "NAOH" "5000"

CONV-OPTIONS
    SECANT MAX-STEP-SIZ=.05 BRACKET=YES

STREAM-REPOR NOSORT MOLEFLOW MASSFLOW PROPERTIES=ALL-SUBS
```

System G-1

```
TITLE 'ITTS PHASE II - MOLTEN METAL DESTRUCTION - SYSG1-4 (main)'

IN-UNITS ENG

DEF-STREAMS MIXCISLD ALL

DIAGNOSTICS
    TERMINAL SIM-LEVEL=8 CONV-LEVEL=8

RUN-CONTROL MAX-TIME=1800

DESCRIPTION "ACCEPTS COMBUSTIBLE, NON-COMBUSTIBLE, SOIL,
        AND METAL WITH FIXED CONTAMINATION.
        For MOD 2, CHANGED SCRUBBER TO RGIBBS RATHER THAN RADFRAC. "

DATABANKS COMBUST  / INORGANIC  / PURECOMP  / SOLIDS  /  &
        NOASPENPCD

PROP-SOURCES COMBUST  / INORGANIC  / PURECOMP  / SOLIDS

COMPONENTS
    H2 H2 H2 /
    O2 O2 O2 /
    N2 N2 N2 /
    CL2 CL2 CL2 /
    F2 F2 F2 /
    NO NO NO /
    SO2 O2S SO2 /
    H2O H2O H2O /
    CO2 CO2 CO2 /
    CO CO CO /
    HCL HCL HCL /
    CH4 CH4 CH4 /
    C-S C C-S /
    S-S S S-S /
    S S S /
    NAOH-S NAOH NAOH-S /
    NACL-S NACL NACL-S /
    NAF-S NAF NAF-S /
    AS AS AS /
    CD CD CD /
    HG HG HG /
    SE SE SE /
    FE FE FE /
    SIO2 SIO2 SIO2 /
    AL2O3 AL2O3 AL2O3 /
    FE-S FE FE-S /
    SIO2-S SIO2 SIO2-S /
    AL2O3-S AL2O3 AL2O3-S /
    AS-S AS AS-S /
    BA-S BA BA-S /
    CD-S CD CD-S /
    CR-S CR CR-S /
    PB-S PB PB-S /
    SE-S SE SE-S /
    AG-S AG AG-S /
    CACO3-S CACO3 CACO3-S /
    MGO-S MGO MGO-S /
    NA2O-S NA2O NA2O-S /
```

```
    K2O-S K2O K2O-S /
    FE3O4 FE3O4 FE3O4 /
    FE3O4-S FE3O4 FE3O4-S /
    CAO-S CAO CAO-S /
    CACL2-S CACL2 CACL2-S /
    CASO4-S CASO4 CASO4-S /
    CAO CAO CAO /
    CACL2 CACL2 CACL2

FLOWSHEET
    BLOCK MM-CEP IN=OXYGEN SOIL FDWASTEN FDWASTEC FDMETMLT  &
        SOLIDS LIME LIQUIDS OUT=EFFLUENT
    BLOCK MM-SEP IN=EFFLUENT OUT=METAL SLAG OFFGAS
    BLOCK SEPARATR IN=QUENCHED OUT=SOLIDS HGPLUS FLUIDS
    BLOCK CATALYST IN=SCRUBVAP AIR OUT=EXHAUST
    BLOCK QUENCH IN=OFFGAS OUT=QUENCHED
    BLOCK SCRUB IN=NAOH VAPOR SCRUBH2O OUT=SCRUBOUT
    BLOCK L-V-SEP IN=SCRUBOUT OUT=SCRUBVAP SCRUBBOT
    BLOCK FLUIDSEP IN=FLUIDS OUT=VAPOR LIQUIDS

PROPERTIES SOLIDS
    PROPERTIES IDEAL / RKS-BM

PROP-SET ALL-SUBS TEMP PRES VFRAC VOLFLMX UNITS='ATM'  &
        SUBSTREAM=ALL

STREAM AIR
    SUBSTREAM MIXED TEMP=68 PRES=1 <ATM> MASS-FLOW=1
    MASS-FRAC O2 0.233 / N2 0.767

;This mass flow rate is 149 + 468 according to Daryoush of MK.
;Thus mixed substream = 4.97;  cisolids = 612.03 lb/hr.

STREAM FDMETMLT
    SUBSTREAM MIXED TEMP=68 PRES=1 <ATM> MASS-FLOW=4.97
    MASS-FLOW H2 2.42
    SUBSTREAM CISOLID TEMP=68 PRES=1 <ATM> MASS-FLOW=612.03
    MASS-FLOW C-S 14.44 / FE-S 282.02 / SIO2-S 0.035 /  &
        AL2O3-S 0.035 / BA-S 0.87 / CD-S 0.18

STREAM FDWASTEC
    SUBSTREAM MIXED TEMP=68 PRES=1 <ATM>
    MASS-FLOW H2 50.95 / O2 92.76 / N2 0.23 / CL2 53.02 /  &
        F2 0.11 / H2O 19.83
    SUBSTREAM CISOLID TEMP=68 PRES=1 <ATM>
    MASS-FLOW C-S 326.28 / S-S 0.49 / FE-S 7.67 / SIO2-S  &
        53.01 / AL2O3-S 53.01 / BA-S 0.77 / CD-S 0.77 / CR-S 1.53

STREAM FDWASTEN
    SUBSTREAM MIXED TEMP=68 PRES=1 <ATM>
    MASS-FLOW H2 0.54 / O2 1.44 / N2 0.01 / CL2 14.88 /  &
        NO 0.66 / SO2 0.83 / H2O 354.23 / HG 0.15
    SUBSTREAM CISOLID TEMP=68 PRES=1 <ATM>
    MASS-FLOW C-S 4.77 / S-S 0.62 / SIO2-S 476.77 /  &
        AL2O3-S 476.77 / AS-S 0.06 / BA-S 0.04 / CD-S 2.63  &
        / CR-S 4.95 / PB-S 0.17 / SE-S 0.03 / AG-S 0.03

STREAM LIME
    SUBSTREAM CISOLID TEMP=68 PRES=1 <ATM> MASS-FLOW=1
    MASS-FRAC CAO-S 1
```

```
STREAM NAOH
    SUBSTREAM CISOLID TEMP=68 PRES=1 <ATM> MASS-FLOW=77
    MASS-FRAC NAOH-S 1

STREAM OXYGEN
    SUBSTREAM MIXED TEMP=68 PRES=1 <ATM> MASS-FLOW=79.25  &
        MAXIT=300
    MASS-FRAC O2 1

STREAM SCRUBH2O
    SUBSTREAM MIXED TEMP=68 PRES=1 <ATM> MASS-FLOW=100
    MASS-FRAC H2O 1

STREAM SOIL
    SUBSTREAM MIXED TEMP=68 PRES=1 <ATM> MASS-FLOW=62.5
    MASS-FLOW H2O .100
    SUBSTREAM CISOLID TEMP=68 PRES=1 <ATM> MASS-FLOW=562.5
    MASS-FLOW SIO2-S 0.569 / AL2O3-S 0.102 / CACO3-S 0.128 /  &
        MGO-S 0.023 / NA2O-S 0.013 / K2O-S 0.024 / FE3O4-S 0.041

BLOCK MM-SEP SEP
    PARAM MAXIT=100 TOL=0.001
    FRAC STREAM=METAL SUBSTREAM=MIXED COMPS=H2 O2 N2 CL2 F2  &
        NO SO2 H2O CO2 CO HCL CH4 C-S S-S S NAOH-S NACL-S  &
        NAF-S AS CD HG SE FE SIO2 AL2O3 FE-S SIO2-S AL2O3-S  &
        AS-S BA-S CD-S CR-S PB-S SE-S AG-S CACO3-S MGO-S  &
        NA2O-S K2O-S FE3O4 FE3O4-S CAO-S CACL2-S CASO4-S  &
        FRACS=0 0 0 0 0 0 0 0 0 0 0 0 0 0 0 0 0 0 0  &
        0 0 0 0 1 0 0 1 0 0 1 1 1 1 1 1 1 0 0 0 0 0 0 0 0 0
    FRAC STREAM=METAL SUBSTREAM=CISOLID COMPS=C-S S-S NAOH-S  &
        NACL-S NAF-S FE-S SIO2-S AL2O3-S AS-S BA-S CD-S CR-S  &
        PB-S SE-S AG-S CACO3-S MGO-S NA2O-S K2O-S FE3O4-S  &
        CAO-S CACL2-S CASO4-S FRACS=0 0 0 0 0 1 0 0 1 1  &
        1 1 1 1 1 0 0 0 0 0 0 0 0
    FRAC STREAM=SLAG SUBSTREAM=MIXED COMPS=H2 O2 N2 CL2 F2  &
        NO SO2 H2O CO2 CO HCL CH4 C-S S-S S NAOH-S NACL-S  &
        NAF-S AS CD HG SE FE SIO2 AL2O3 FE-S SIO2-S AL2O3-S  &
        AS-S BA-S CD-S CR-S PB-S SE-S AG-S CACO3-S MGO-S  &
        NA2O-S K2O-S FE3O4 FE3O4-S CAO-S CACL2-S CASO4-S CACL2  &
        FRACS=0 0 0 0 0 0 0 0 0 0 0 0 .8 .8 0 .8 .8  &
        .8 0 0 0 0 0 .8 .8 0 .8 .8 0 0 0 0 0 0 0 .8  &
        .8 .8 .8 .8 .8 .8 .8 .8 1
    FRAC STREAM=SLAG SUBSTREAM=CISOLID COMPS=C-S S-S NAOH-S  &
        NACL-S NAF-S FE-S SIO2-S AL2O3-S AS-S BA-S CD-S CR-S  &
        PB-S SE-S AG-S CACO3-S MGO-S NA2O-S K2O-S FE3O4-S  &
        CAO-S CACL2-S CASO4-S FRACS=.8 .8 .8 .8 .8 0 .8 .8  &
        0 0 0 0 0 0 0 .8 .8 .8 .8 .8 .8 .8 .8
    PROPERTIES SOLIDS

BLOCK SEPARATR SEP
    FRAC STREAM=SOLIDS SUBSTREAM=MIXED COMPS=H2 O2 N2 CL2  &
        F2 NO SO2 H2O CO2 CO HCL CH4 C-S S-S S NAOH-S  &
        NACL-S NAF-S AS CD HG SE FE SIO2 AL2O3 FE-S SIO2-S  &
        AL2O3-S AS-S BA-S CD-S CR-S PB-S SE-S AG-S CACO3-S  &
        MGO-S NA2O-S K2O-S FE3O4 FE3O4-S CAO-S CACL2-S CASO4-S  &
        CAO CACL2 FRACS=0 0 0 0 0 0 0 0 0 0 0 0 0 1 1  &
        1 0 0 0 0 0 0 0 1 1 1 1 1 1 0 1 0 1 1 0 1  &
        1 1 1 1 1 1 1 1 1 1 1
    FRAC STREAM=SOLIDS SUBSTREAM=CISOLID COMPS=C-S S-S NAOH-S  &
        NACL-S NAF-S FE-S SIO2-S AL2O3-S AS-S BA-S CD-S CR-S  &
        PB-S SE-S AG-S CACO3-S MGO-S NA2O-S K2O-S FE3O4-S  &
        CAO-S CACL2-S CASO4-S FRACS=1 1 0 0 0 1 1 1 0 1  &
```

```
        0 1 1 0 1 1 1 1 1 1 1 1 1
    FRAC STREAM=HGPLUS SUBSTREAM=MIXED COMPS=H2 O2 N2 CL2  &
        F2 NO SO2 H2O CO2 CO HCL CH4 C-S S-S S NAOH-S  &
        NACL-S NAF-S AS CD HG SE FE SIO2 AL2O3 FE-S SIO2-S  &
        AL2O3-S AS-S BA-S CD-S CR-S PB-S SE-S AG-S CACO3-S  &
        MGO-S NA2O-S K2O-S FE3O4 FE3O4-S CAO-S CACL2-S CASO4-S  &
        FRACS=0 0 0 0 0 0 0 0 0 0 0 0 0 0 0 0 0 0 0  &
        1 1 1 1 0 0 0 0 0 0 1 0 1 0 0 1 0 0 0 0 0 0 0 0 0 0
    FRAC STREAM=HGPLUS SUBSTREAM=CISOLID COMPS=C-S S-S NAOH-S  &
        NACL-S NAF-S FE-S SIO2-S AL2O3-S AS-S BA-S CD-S CR-S  &
        PB-S SE-S AG-S CACO3-S MGO-S NA2O-S K2O-S FE3O4-S  &
        CAO-S CACL2-S CASO4-S FRACS=0 0 0 0 0 0 0 0 1 0  &
        1 0 0 1 0 0 0 0 0 0 0 0 0

BLOCK FLUIDSEP FLASH2
    PARAM TEMP=200 PRES=1 <ATM>

BLOCK L-V-SEP FLASH2
    PARAM TEMP=80 PRES=1 <ATM>

BLOCK CATALYST RSTOIC
    PARAM TEMP=1500 PRES=1 <ATM>
    STOIC 1 MIXED CO -1 / O2 -.5 / CO2 1
    STOIC 2 MIXED H2 -1 / O2 -.5 / H2O 1
    CONV 1 MIXED CO 1
    CONV 2 MIXED H2 1

BLOCK MM-CEP RGIBBS
    PARAM TEMP=2732 PRES=1 <ATM> NPHASE=2 MAXIT=300
    PROD H2 / O2 / N2 / CL2 / F2 / NO / SO2 / H2O /  &
        CO2 / CO / HCL / C-S SS / S-S SS / S / NAOH-S  &
        SS / NACL-S SS / NAF-S SS / AS / CD / HG / SE  &
        / SIO2 / AL2O3 / FE-S SS / BA-S SS / CR-S SS /  &
        PB-S SS / AG-S SS / MGO-S SS / NA2O-S SS / K2O-S  &
        SS / FE3O4-S SS / CASO4-S SS / CAO-S SS / CACL2-S  &
        SS / CACL2

BLOCK QUENCH RGIBBS
    PARAM TEMP=200 PRES=1 <ATM> NPHASE=2 MAXIT=500
    PROD H2 / O2 / N2 / F2 / NO / SO2 / H2O / CO2 /  &
        CO / HCL / NAOH-S SS / NACL-S SS / NAF-S SS /  &
        AS / CD / HG / SE / FE-S SS / SIO2-S SS /  &
        AL2O3-S SS / AS-S SS / BA-S SS / CD-S SS / CR-S  &
        SS / PB-S SS / SE-S SS / AG-S SS / MGO-S SS /  &
        NA2O-S SS / K2O-S SS / FE3O4-S SS / CAO-S SS /  &
        CACL2-S SS / CASO4-S SS
    PROD-FRAC H2O 0.9999
    BLOCK-OPTION RESTART=NO

BLOCK SCRUB RGIBBS
    PARAM TEMP=80 PRES=1 <ATM> NPHASE=2 MAXIT=500
    PROD H2 / O2 / N2 / F2 / NO / SO2 / H2O / CO2 /  &
        CO / HCL / NACL-S SS / NAF-S SS / NAOH-S SS
    PROD-FRAC CO 1 / CO2 1

DESIGN-SPEC AIR
    DEFINE OXIN1 MASS-FLOW STREAM=AIR SUBSTREAM=MIXED  &
        COMPONENT=O2
    DEFINE OXIN2 MASS-FLOW STREAM=SCRUBVAP SUBSTREAM=MIXED  &
        COMPONENT=O2
    DEFINE OXOUT MASS-FLOW STREAM=EXHAUST SUBSTREAM=MIXED  &
        COMPONENT=O2
```

```
    SPEC "OXIN1+OXIN2-2.0*OXOUT" TO "0"
    TOL-SPEC "0.1"
    VARY STREAM-VAR STREAM=AIR SUBSTREAM=MIXED  &
        VARIABLE=MASS-FLOW
    LIMITS "1" "1000000"

DESIGN-SPEC LIME
    DEFINE CAOIN MOLE-FLOW STREAM=LIME SUBSTREAM=CISOLID  &
        COMPONENT=CAO-S
    DEFINE CL2INC MOLE-FLOW STREAM=FDWASTEC SUBSTREAM=MIXED  &
        COMPONENT=CL2
    DEFINE CL2INN MOLE-FLOW STREAM=FDWASTEN SUBSTREAM=MIXED  &
        COMPONENT=CL2
    SPEC "CAOIN" TO "0.9*(CL2INC+CL2INN)"
    TOL-SPEC "0.01"
    VARY STREAM-VAR STREAM=LIME SUBSTREAM=CISOLID  &
        VARIABLE=MASS-FLOW
    LIMITS "1" "1000"

DESIGN-SPEC NAOH
    DEFINE CAUIN MASS-FLOW STREAM=NAOH SUBSTREAM=CISOLID  &
        COMPONENT=NAOH-S
    DEFINE CAUOUT MASS-FLOW STREAM=SCRUBOUT SUBSTREAM=CISOLID  &
        COMPONENT=NAOH-S
    SPEC "CAUIN" TO "CAUOUT*100"
    TOL-SPEC "0.1"
    VARY STREAM-VAR STREAM=NAOH SUBSTREAM=CISOLID  &
        VARIABLE=MASS-FLOW
    LIMITS "13" "100"

DESIGN-SPEC SCRUBH2O
    DEFINE MASSAL STREAM-VAR STREAM=SCRUBBOT SUBSTREAM=CISOLID  &
        VARIABLE=MASS-FLOW
    DEFINE SCRUB STREAM-VAR STREAM=SCRUBH2O SUBSTREAM=MIXED  &
        VARIABLE=MASS-FLOW
    DEFINE NAOH STREAM-VAR STREAM=NAOH SUBSTREAM=CISOLID  &
        VARIABLE=MASS-FLOW
    SPEC "SCRUB" TO "20*MASSAL"
    TOL-SPEC "0.01"
    VARY STREAM-VAR STREAM=SCRUBH2O SUBSTREAM=MIXED  &
        VARIABLE=MASS-FLOW
    LIMITS "NAOH" "5000"

DESIGN-SPEC SOILH2O
    DEFINE SLAG1 STREAM-VAR STREAM=SLAG SUBSTREAM=MIXED  &
        VARIABLE=MASS-FLOW
    DEFINE SLAG2 STREAM-VAR STREAM=SLAG SUBSTREAM=CISOLID  &
        VARIABLE=MASS-FLOW
    DEFINE SOIL STREAM-VAR STREAM=SOIL SUBSTREAM=MIXED  &
        VARIABLE=MASS-FLOW
    SPEC "30.*SOIL" TO "SLAG1+SLAG2"
    TOL-SPEC "0.10"
    VARY STREAM-VAR STREAM=SOIL SUBSTREAM=MIXED  &
        VARIABLE=MASS-FLOW
    LIMITS "1" "1000"

DESIGN-SPEC SOILSOL
    DEFINE SLAG1 STREAM-VAR STREAM=SLAG SUBSTREAM=MIXED  &
        VARIABLE=MASS-FLOW
    DEFINE SLAG2 STREAM-VAR STREAM=SLAG SUBSTREAM=CISOLID  &
        VARIABLE=MASS-FLOW
    DEFINE SOIL STREAM-VAR STREAM=SOIL SUBSTREAM=CISOLID  &
```

```
        VARIABLE=MASS-FLOW
    SPEC "3.33333*SOIL" TO "SLAG1+SLAG2"
    TOL-SPEC "0.10"
    VARY STREAM-VAR STREAM=SOIL SUBSTREAM=CISOLID  &
        VARIABLE=MASS-FLOW
    LIMITS "1" "1000"

CONV-OPTIONS
    PARAM TEAR-METHOD=BROYDEN
    SECANT MAXIT=75 MAX-STEP-SIZ=.06 BRACKET=YES

STREAM-REPOR NOSORT MOLEFLOW MASSFLOW PROPERTIES=ALL-SUBS
```

System H-1

```
TITLE  &
        'ITTS PHASE II - MOLTEN SALT OXIDATION - MODEL SYSF1-4 (main)'

IN-UNITS ENG

DEF-STREAMS MIXCISLD ALL

RUN-CONTROL MAX-TIME=1800

DESCRIPTION "MSO ACCEPTS COMBUSTIBLE WASTE ONLY.
        NON-COMBUSTIBLES GO TO VITRIFICATION.
        For MOD 2, SCRUBBER CHANGED TO RGIBBS RATHER THAN RADFRAC.
        MOD 3: AIR INTO MSO, ADD SOIL DESIGN SPEC. "

DATABANKS COMBUST  / INORGANIC  / PURECOMP  / SOLIDS  /  &
        NOASPENPCD

PROP-SOURCES COMBUST  / INORGANIC  / PURECOMP  / SOLIDS

COMPONENTS
    H2 H2 H2 /
    O2 O2 O2 /
    N2 N2 N2 /
    CL2 CL2 CL2 /
    F2 F2 F2 /
    NO NO NO /
    SO2 O2S SO2 /
    H2O H2O H2O /
    CO2 CO2 CO2 /
    CO CO CO /
    HCL HCL HCL /
    CH4 CH4 CH4 /
    C-S C C-S /
    S-S S S-S /
    S S S /
    NAOH-S NAOH NAOH-S /
    NACL-S NACL NACL-S /
    NAF-S NAF NAF-S /
    AS AS AS /
    CD CD CD /
    HG HG HG /
    SE SE SE /
    FE FE FE /
    SIO2 SIO2 SIO2 /
    AL2O3 AL2O3 AL2O3 /
    FE-S FE FE-S /
    SIO2-S SIO2 SIO2-S /
    AL2O3-S AL2O3 AL2O3-S /
    AS-S AS AS-S /
    BA-S BA BA-S /
    CD-S CD CD-S /
    CR-S CR CR-S /
    PB-S PB PB-S /
    SE-S SE SE-S /
    AG-S AG AG-S /
    CACO3-S CACO3 CACO3-S /
    MGO-S MGO MGO-S /
    NA2O-S NA2O NA2O-S /
    K2O-S K2O K2O-S /
```

```
    FE3O4 FE3O4 FE3O4 /
    FE3O4-S FE3O4 FE3O4-S /
    CAO-S CAO CAO-S

FLOWSHEET
    BLOCK VITRIFY IN=SOLIDS OUT=VITOUT
    BLOCK VIT-SEP IN=VITOUT OUT=VITVAP SLAG
    BLOCK SCC2 IN=FUELMIX2 EFFLUENT OUT=OUT2
    BLOCK Q2 IN=DUM2IN OUT=DUM2OUT
    BLOCK DUPL2 IN=OUT2 OUT=SCCOUT2 DUM2IN
    BLOCK MELTER IN=FDMETMLT OUT=METAL
    BLOCK FILTERS IN=GASOUT OUT=SYNGAS ASH
    BLOCK SCRUB IN=NAOH SCRUBH2O SYNGAS OUT=SCRUBOUT
    BLOCK L-V-SEP IN=SCRUBOUT OUT=SCRUBVAP SCRUBBOT
    BLOCK QUENCH2 IN=SCCOUT2 QNCH2O-2 OUT=QUENCHD2
    BLOCK BAGHSE2 IN=QUENCHD2 OUT=FILTGAS2 HGPLUS2 FLYASH2
    BLOCK FEED-SEP IN=SOIL FDWASTEN FLYASH2 ASH OUT=SOLIDS  &
        ORGANICS
    BLOCK PLENUM IN=ORGANICS VITVAP OXYGEN OUT=EFFLUENT
    BLOCK L-V-SEP2 IN=SCRBOUT2 OUT=SCRBVAP2 SCRBBOT2
    BLOCK SCRUB-2 IN=SCRBH2O2 NAOH-2 FILTGAS2 OUT=SCRBOUT2
    BLOCK HEATER IN=FUELMIX1 OUT=EXHAUST1
    BLOCK STEAMGEN IN=WATER OUT=STEAM
    BLOCK CATALYST IN=HOTVAP AIR OUT=EXHAUST2
    BLOCK REHEAT IN=SCRUBVAP OUT=HOTVAP
    BLOCK GASIFIER IN=FDWASTEC STEAM OUT=GASOUT

PROPERTIES SOLIDS
    PROPERTIES IDEAL / RKS-BM

PROP-SET ALL-SUBS TEMP PRES VFRAC UNITS='ATM' SUBSTREAM=ALL

STREAM AIR
    SUBSTREAM MIXED TEMP=68.0 PRES=1 <ATM> MASS-FLOW=6000
    MASS-FRAC O2 0.233 / N2 0.767

STREAM FDMETMLT
    SUBSTREAM MIXED TEMP=68 PRES=1 <ATM> MASS-FLOW=1.20
    MASS-FLOW H2 1.20
    SUBSTREAM CISOLID TEMP=67 PRES=1 <ATM> MASS-FLOW=147.8
    MASS-FLOW C-S 14.44 / FE-S 282.02 / SIO2-S 0.035 /  &
        AL2O3-S 0.035 / BA-S 0.87 / CD-S 0.18

STREAM FDWASTEC
    SUBSTREAM MIXED TEMP=68 PRES=1 <ATM>
    MASS-FLOW H2 50.95 / O2 92.76 / N2 0.23 / CL2 53.02 /  &
        F2 0.11 / H2O 19.83
    SUBSTREAM CISOLID TEMP=68 PRES=1 <ATM>
    MASS-FLOW C-S 326.28 / S-S 0.49 / FE-S 7.67 / SIO2-S  &
        53.01 / AL2O3-S 53.01 / BA-S 0.77 / CD-S 0.77 / CR-S 1.53

STREAM FDWASTEN
    SUBSTREAM MIXED TEMP=68 PRES=1 <ATM>
    MASS-FLOW H2 0.54 / O2 1.44 / N2 0.01 / CL2 14.88 /  &
        NO 0.66 / SO2 0.83 / H2O 354.23 / HG 0.15
    SUBSTREAM CISOLID TEMP=68 PRES=1 <ATM>
    MASS-FLOW C-S 4.77 / S-S 0.62 / SIO2-S 476.77 /  &
        AL2O3-S 476.77 / AS-S 0.06 / BA-S 0.04 / CD-S 2.63  &
        / CR-S 4.95 / PB-S 0.17 / SE-S 0.03 / AG-S 0.03
```

```
STREAM FUELMIX1
    SUBSTREAM MIXED TEMP=68 PRES=1 <ATM> MASS-FLOW=3370
    MASS-FRAC O2 0.222 / N2 0.732 / CH4 0.046

STREAM FUELMIX2
    SUBSTREAM MIXED TEMP=68 PRES=1 <ATM> MASS-FLOW=585.6
    MASS-FRAC O2 0.222 / N2 0.732 / CH4 0.046

STREAM NAOH
    SUBSTREAM CISOLID TEMP=68.0 PRES=1 <ATM> MASS-FLOW=60.65
    MASS-FRAC NAOH-S 1

STREAM NAOH-2
    SUBSTREAM CISOLID TEMP=68 PRES=1 <ATM> MASS-FLOW=16.96
    MASS-FRAC NAOH-S 1

STREAM OXYGEN
    SUBSTREAM MIXED TEMP=68 PRES=1 <ATM> MASS-FLOW=117.9
    MASS-FRAC O2 1

STREAM QNCH2O-2
    SUBSTREAM MIXED TEMP=68 PRES=1 <ATM> MASS-FLOW=751.1
    MASS-FRAC H2O 1

STREAM SCRBH2O2
    SUBSTREAM MIXED TEMP=68 PRES=1 <ATM> MASS-FLOW=5000
    MASS-FRAC H2O 1

STREAM SCRUBH2O
    SUBSTREAM MIXED TEMP=68 PRES=1 <ATM> MASS-FLOW=500
    MASS-FRAC H2O 1

STREAM SOIL
    SUBSTREAM MIXED TEMP=68 PRES=1 <ATM> MASS-FLOW=49.76
    MASS-FLOW H2O .100
    SUBSTREAM CISOLID TEMP=68 PRES=1 <ATM> MASS-FLOW=447.84
    MASS-FLOW SIO2-S 0.569 / AL2O3-S 0.102 / CACO3-S 0.128 /  &
        MGO-S 0.023 / NA2O-S 0.013 / K2O-S 0.024 / FE3O4-S 0.041

STREAM WATER
    SUBSTREAM MIXED TEMP=68.0 PRES=14.695949 MASS-FLOW=446
    MASS-FRAC H2O 1.0

BLOCK BAGHSE2 SEP
    FRAC STREAM=FILTGAS2 SUBSTREAM=MIXED COMPS=H2 O2 N2 CL2  &
        F2 NO SO2 H2O CO2 CO HCL CH4 C-S S-S S NAOH-S  &
        NACL-S NAF-S AS CD HG SE FE SIO2 AL2O3 FE-S SIO2-S  &
        AL2O3-S AS-S BA-S CD-S CR-S PB-S SE-S AG-S CACO3-S  &
        MGO-S NA2O-S K2O-S FE3O4 FE3O4-S CAO-S FRACS=1 1 1  &
        1 1 1 1 1 1 1 1 1 0 0 0 0 0 0 0 0 0 0 0 0 0  &
        0 0 0 0 0 0 0 0 0 0 0 0 0 0 0 0 0 0 0
    FRAC STREAM=FILTGAS2 SUBSTREAM=CISOLID COMPS=C-S S-S  &
        NAOH-S NACL-S NAF-S FE-S SIO2-S AL2O3-S AS-S BA-S  &
        CD-S CR-S PB-S SE-S AG-S CACO3-S MGO-S NA2O-S K2O-S  &
        FE3O4-S CAO-S FRACS=0 0 0 0 0 0 0 0 0 0 0 0 0 0  &
        0 0 0 0 0 0 0 0
    FRAC STREAM=HGPLUS2 SUBSTREAM=MIXED COMPS=H2 O2 N2 CL2  &
        F2 NO SO2 H2O CO2 CO HCL CH4 C-S S-S S NAOH-S  &
        NACL-S NAF-S AS CD HG SE FE SIO2 AL2O3 FE-S SIO2-S  &
        AL2O3-S AS-S BA-S CD-S CR-S PB-S SE-S AG-S CACO3-S  &
        MGO-S NA2O-S K2O-S FE3O4 FE3O4-S CAO-S FRACS=0 0 0  &
```

```
        0 0 0 0 0 0 0 0 0 0 0 0 0 0 0 0 1 1 1 1 0 0  &
        0 0 0 0 1 0 1 0 0 1 0 0 0 0 0 0 0 0
    FRAC STREAM=HGPLUS2 SUBSTREAM=CISOLID COMPS=C-S S-S  &
        NAOH-S NACL-S NAF-S FE-S SIO2-S AL2O3-S AS-S BA-S  &
        CD-S CR-S PB-S SE-S AG-S CACO3-S MGO-S NA2O-S K2O-S  &
        FE3O4-S CAO-S FRACS=0 0 0 0 0 0 0 0 1 0 1 0 0  &
        1 0 0 0 0 0 0 0

BLOCK FEED-SEP SEP
    FRAC STREAM=SOLIDS SUBSTREAM=MIXED COMPS=H2 O2 N2 CL2  &
        F2 NO SO2 H2O CO2 CO HCL CH4 C-S S-S S NAOH-S  &
        NACL-S NAF-S AS CD HG SE FE SIO2 AL2O3 FE-S SIO2-S  &
        AL2O3-S AS-S BA-S CD-S CR-S PB-S SE-S AG-S CACO3-S  &
        MGO-S NA2O-S K2O-S FE3O4 FE3O4-S CAO-S FRACS=0 0 0  &
        0 0 0 0 0 0 0 0 0 .05 .05 .05 .95 .95 .95 .95  &
        .95 .95 .95 .95 .95 .95 .95 .95 .95 .95 .95 .95  &
        .95 .95 .95 .95 .95 .95 .95 .95 .95 .95 .95
    FRAC STREAM=SOLIDS SUBSTREAM=CISOLID COMPS=C-S S-S NAOH-S  &
        NACL-S NAF-S FE-S SIO2-S AL2O3-S AS-S BA-S CD-S CR-S  &
        PB-S SE-S AG-S CACO3-S MGO-S NA2O-S K2O-S FE3O4-S  &
        CAO-S FRACS=.05 .05 .95 .95 .95 .95 .95 .95 .95  &
        .95 .95 .95 .95 .95 .95 .95 .95 .95 .95 .95 .95

BLOCK FILTERS SEP
    FRAC STREAM=SYNGAS SUBSTREAM=MIXED COMPS=H2 O2 N2 CL2  &
        F2 NO SO2 H2O CO2 CO HCL CH4 C-S S-S S NAOH-S  &
        NACL-S NAF-S AS CD HG SE FE SIO2 AL2O3 FE-S SIO2-S  &
        AL2O3-S AS-S BA-S CD-S CR-S PB-S SE-S AG-S CACO3-S  &
        MGO-S NA2O-S K2O-S FE3O4 FE3O4-S CAO-S FRACS=1 1 1  &
        1 1 1 1 1 1 1 1 1 0 0 0 0 0 0 0 0 0 0 0 0 0  &
        0 0 0 0 0 0 0 0 0 0 0 0 0 0 0 0 0 0
    FRAC STREAM=SYNGAS SUBSTREAM=CISOLID COMPS=C-S S-S NAOH-S  &
        NACL-S NAF-S FE-S SIO2-S AL2O3-S AS-S BA-S CD-S CR-S  &
        PB-S SE-S AG-S CACO3-S MGO-S NA2O-S K2O-S FE3O4-S  &
        CAO-S FRACS=0 0 0 0 0 0 0 0 0 0 0 0 0 0 0 0 0 0 0 0 0 0
    FLASH-SPECS ASH TEMP=68 PRES=1 <ATM>

BLOCK VIT-SEP SEP
    FRAC STREAM=SLAG SUBSTREAM=MIXED COMPS=H2 O2 N2 CL2 F2  &
        NO SO2 H2O CO2 CO HCL CH4 C-S S-S S NAOH-S NACL-S  &
        NAF-S AS CD HG SE FE SIO2 AL2O3 FE-S SIO2-S AL2O3-S  &
        AS-S BA-S CD-S CR-S PB-S SE-S AG-S CACO3-S MGO-S  &
        NA2O-S K2O-S FE3O4 FE3O4-S CAO-S FRACS=0 0 0 0 0 0  &
        0 0 0 0 0 0 1 1 1 1 1 1 0 0 0 0 1 1 1 1 1  &
        1 1 1 1 1 1 1 1 1 1 1 1 1 1 1 1
    FRAC STREAM=SLAG SUBSTREAM=CISOLID COMPS=C-S S-S NAOH-S  &
        NACL-S NAF-S FE-S SIO2-S AL2O3-S AS-S BA-S CD-S CR-S  &
        PB-S SE-S AG-S CACO3-S MGO-S NA2O-S K2O-S FE3O4-S  &
        CAO-S FRACS=1 1 1 1 1 1 1 1 1 1 1 1 1 1 1 1 1 1 1 1 1

BLOCK STEAMGEN HEATER
    PARAM TEMP=900 PRES=1 <ATM>

BLOCK L-V-SEP FLASH2
    PARAM TEMP=160 PRES=1 <ATM>

BLOCK L-V-SEP2 FLASH2
    PARAM TEMP=120 PRES=1 <ATM>

BLOCK CATALYST RSTOIC
    PARAM TEMP=1500 PRES=1 <ATM>
    STOIC 1 MIXED CO -1 / O2 -0.5 / CO2 1
```

```
    STOIC 2 MIXED H2 -1 / O2 -0.5 / H2O 1
    STOIC 3 MIXED CH4 -1 / O2 -2 / H2O 2 / CO2 1
    CONV 1 MIXED CO 1
    CONV 2 MIXED H2 1
    CONV 3 MIXED CH4 1

BLOCK GASIFIER RSTOIC
    PARAM TEMP=1400 PRES=1 <ATM>
    STOIC 1 CISOLID C-S -1 / MIXED H2O -1 / H2 1 / CO 1
    STOIC 2 MIXED H2 -1 / CL2 -1 / HCL 2
    STOIC 3 MIXED O2 -1 / CO -2 / CO2 2
    STOIC 4 MIXED O2 -1 / H2 -2 / H2O 2
    CONV 1 CISOLID C-S .90
    CONV 2 MIXED CL2 1
    CONV 3 MIXED O2 0.5
    CONV 4 MIXED O2 0.5

BLOCK HEATER RGIBBS
    PARAM TEMP=1400 PRES=1 <ATM> NPHASE=2
    PROD H2 / O2 / N2 / NO / H2O / CO2 / CO / CH4 / C-S SS

BLOCK MELTER RGIBBS
    PARAM TEMP=3000 PRES=1 <ATM> NPHASE=2 VAPOR=YES MAXIT=500
    PROD H2 / C-S SS / FE / SIO2 / AL2O3 / FE-S SS /  &
        SIO2-S SS / AL2O3-S SS / BA-S SS / CD / CD-S SS

BLOCK PLENUM RGIBBS
    PARAM TEMP=1800 PRES=1 <ATM> NPHASE=2
    PROD H2 / O2 / N2 / CL2 / F2 / NO / SO2 / H2O /  &
        CO2 / CO / HCL / C-S SS / S-S SS / S / AS /  &
        CD / HG / SE / FE-S SS / SIO2-S SS / AL2O3-S SS  &
        / BA-S SS / CR-S SS / PB-S SS / AG-S SS / MGO-S  &
        SS / NA2O-S SS / K2O-S SS / FE3O4-S SS / CAO-S SS

BLOCK Q2 RGIBBS
    PARAM TEMP=68 PRES=1 <ATM> NPHASE=2 TAPP=2132
    PROD H2 / O2 / N2 / CL2 / F2 / NO / SO2 / H2O /  &
        CO2 / CO / HCL / AS / CD / HG / SE / FE-S SS  &
        / SIO2-S SS / AL2O3-S SS / BA-S SS / CR-S SS /  &
        PB-S SS / AG-S SS / MGO-S SS / NA2O-S SS / K2O-S  &
        SS / FE3O4-S SS / CAO-S SS
    PROD-FRAC SE 1

BLOCK QUENCH2 RGIBBS
    PARAM TEMP=350 PRES=1 <ATM> NPHASE=2 MAXIT=500
    PROD H2 / O2 / N2 / CL2 / F2 / NO / SO2 / H2O /  &
        CO2 / CO / HCL / AS / CD / HG / SE / FE-S SS  &
        / SIO2-S SS / AL2O3-S SS / AS-S SS / BA-S SS /  &
        CD-S SS / CR-S SS / PB-S SS / SE-S SS / AG-S SS  &
        / MGO-S SS / NA2O-S SS / K2O-S SS / FE3O4-S SS /  &
        CAO-S SS

BLOCK REHEAT RGIBBS
    PARAM TEMP=220 PRES=1 <ATM> NPHASE=2 CHEMEQ=YES
    PROD H2 / O2 / N2 / SO2 / H2O / CO2 / CO
    PROD-FRAC O2 1 / H2O 1 / CO 1

BLOCK SCC2 RGIBBS
    PARAM TEMP=2200 PRES=1 <ATM> NPHASE=2
    PROD H2 M / O2 M / N2 M / CL2 M / F2 M / NO M /  &
        SO2 M / H2O M / CO2 M / CO M / HCL / AS / CD  &
        / HG / SE / FE-S SS / SIO2-S SS / AL2O3-S SS /  &
```

```
        BA-S SS / CR-S SS / PB-S SS / AG-S SS / MGO-S  &
        SS / NA2O-S SS / K2O-S SS / FE3O4-S SS / CAO-S SS

BLOCK SCRUB RGIBBS
    PARAM TEMP=160 PRES=1 <ATM> NPHASE=2 MAXIT=500
    PROD H2 / O2 / N2 / CL2 / F2 / NO / SO2 / H2O /  &
        CO2 / CO / HCL / NAOH-S SS / NACL-S SS / NAF-S  &
        SS
    PROD-FRAC CO2 1 / CO 1 / SO2 1

BLOCK SCRUB-2 RGIBBS
    PARAM TEMP=120 PRES=1 <ATM> NPHASE=2 MAXIT=500
    PROD H2 / O2 / N2 / CL2 / F2 / NO / SO2 / H2O /  &
        CO2 / CO / HCL / C-S SS / S-S SS / NAOH-S SS /  &
        NACL-S SS

BLOCK VITRIFY RGIBBS
    PARAM TEMP=3000 PRES=1 <ATM> NPHASE=2 MAXIT=50
    PROD H2 / O2 / N2 / CL2 / F2 / NO / SO2 / H2O /  &
        CO2 / CO / HCL / C-S SS / S / AS / CD / HG /  &
        SE / FE / SIO2 / AL2O3 / BA-S SS / CR-S SS /  &
        PB-S SS / AG-S SS / MGO-S SS / NA2O-S SS / K2O-S  &
        SS / FE3O4 / CAO-S SS

BLOCK DUPL2 DUPL

DESIGN-SPEC SCRBH2O2
    DEFINE MASSAL STREAM-VAR STREAM=SCRBBOT2 SUBSTREAM=CISOLID  &
        VARIABLE=MASS-FLOW
    DEFINE SCRUB STREAM-VAR STREAM=SCRBH2O2 SUBSTREAM=MIXED  &
        VARIABLE=MASS-FLOW
    DEFINE NAOH STREAM-VAR STREAM=NAOH-2 SUBSTREAM=CISOLID  &
        VARIABLE=MASS-FLOW
    SPEC "SCRUB" TO "20*MASSAL"
    TOL-SPEC "0.01"
    VARY STREAM-VAR STREAM=SCRBH2O2 SUBSTREAM=MIXED  &
        VARIABLE=MASS-FLOW
    LIMITS "NAOH" "5000"

DESIGN-SPEC SCRUBH2O
    DEFINE MASSAL STREAM-VAR STREAM=SCRUBBOT SUBSTREAM=CISOLID  &
        VARIABLE=MASS-FLOW
    DEFINE SCRUB STREAM-VAR STREAM=SCRUBH2O SUBSTREAM=MIXED  &
        VARIABLE=MASS-FLOW
    DEFINE NAOH STREAM-VAR STREAM=NAOH SUBSTREAM=CISOLID  &
        VARIABLE=MASS-FLOW
    SPEC "SCRUB" TO "20*MASSAL"
    TOL-SPEC "0.01"
    VARY STREAM-VAR STREAM=SCRUBH2O SUBSTREAM=MIXED  &
        VARIABLE=MASS-FLOW
    LIMITS "NAOH" "5000"

CONV-OPTIONS
    SECANT MAX-STEP-SIZ=.05 BRACKET=YES

STREAM-REPOR NOSORT MOLEFLOW MASSFLOW PROPERTIES=ALL-SUBS
```

System J-1

```
TITLE  &
        'ITTS PHASE II - MOLTEN SALT OXIDATION - MODEL SYSF1-4 (main)'

IN-UNITS ENG

DEF-STREAMS MIXCISLD ALL

RUN-CONTROL MAX-TIME=1800

DESCRIPTION "MSO ACCEPTS COMBUSTIBLE WASTE ONLY.
        NON-COMBUSTIBLES GO TO VITRIFICATION.
        For MOD 2, SCRUBBER CHANGED TO RGIBBS RATHER THAN RADFRAC.
        MOD 3: AIR INTO MSO, ADD SOIL DESIGN SPEC. "

DATABANKS COMBUST  / INORGANIC  / PURECOMP  / SOLIDS  /  &
        NOASPENPCD

PROP-SOURCES COMBUST  / INORGANIC  / PURECOMP  / SOLIDS

COMPONENTS
    H2 H2 H2 /
    O2 O2 O2 /
    N2 N2 N2 /
    CL2 CL2 CL2 /
    F2 F2 F2 /
    NO NO NO /
    SO2 O2S SO2 /
    H2O H2O H2O /
    CO2 CO2 CO2 /
    CO CO CO /
    HCL HCL HCL /
    CH4 CH4 CH4 /
    C-S C C-S /
    S-S S S-S /
    S S S /
    NAOH-S NAOH NAOH-S /
    NACL-S NACL NACL-S /
    NAF-S NAF NAF-S /
    AS AS AS /
    CD CD CD /
    HG HG HG /
    SE SE SE /
    FE FE FE /
    SIO2 SIO2 SIO2 /
    AL2O3 AL2O3 AL2O3 /
    FE-S FE FE-S /
    SIO2-S SIO2 SIO2-S /
    AL2O3-S AL2O3 AL2O3-S /
    AS-S AS AS-S /
    BA-S BA BA-S /
    CD-S CD CD-S /
    CR-S CR CR-S /
    PB-S PB PB-S /
    SE-S SE SE-S /
    AG-S AG AG-S /
    CACO3-S CACO3 CACO3-S /
    MGO-S MGO MGO-S /
    NA2O-S NA2O NA2O-S /
    K2O-S K2O K2O-S /
```

```
    FE3O4 FE3O4 FE3O4 /
    FE3O4-S FE3O4 FE3O4-S /
    CAO-S CAO CAO-S /
    NA2CO3 NA2CO3 NA2CO3 /
    NA2SO4 NA2SO4 NA2SO4 /
    H2SO4 H2SO4 H2SO4 /
    NA2CO3-S NA2CO3 NA2CO3-S /
    NA2SO4-S NA2SO4 NA2SO4-S

FLOWSHEET
    BLOCK VITRIFY IN=SOLIDS OUT=VITOUT
    BLOCK VIT-SEP IN=VITOUT OUT=VITVAP SLAG
    BLOCK SCC IN=FUELMIX1 EFFLUENT OUT=OUT1
    BLOCK Q1 IN=DUM1IN OUT=DUM1OUT
    BLOCK DUPL1 IN=OUT1 OUT=SCCOUT DUM1IN
    BLOCK MELTER IN=FDMETMLT OUT=METAL
    BLOCK QUENCH IN=SCCOUT QNCH2O OUT=QUENCHED
    BLOCK BAGHOUSE IN=QUENCHED OUT=FILTGAS HGPLUS FLYASH
    BLOCK FEED-SEP IN=SOIL FDWASTEN FLYASH FDWASTEC OUT= &
        SOLIDS ORGANICS
    BLOCK PLENUM IN=ORGANICS VITVAP OXYGEN OUT=EFFLUENT
    BLOCK L-V-SEP IN=SCRUBOUT OUT=SCRUBVAP SCRUBBOT
    BLOCK SCRUB IN=SCRUBH2O NAOH FILTGAS OUT=SCRUBOUT

PROPERTIES SOLIDS
    PROPERTIES IDEAL / RKS-BM

PROP-SET ALL-SUBS TEMP PRES VFRAC UNITS='ATM' SUBSTREAM=ALL

STREAM FDMETMLT
    SUBSTREAM MIXED TEMP=68 PRES=1 <ATM> MASS-FLOW=1.20
    MASS-FLOW H2 1.20
    SUBSTREAM CISOLID TEMP=67 PRES=1 <ATM> MASS-FLOW=147.8
    MASS-FLOW C-S 14.44 / FE-S 282.02 / SIO2-S 0.035 /  &
        AL2O3-S 0.035 / BA-S 0.87 / CD-S 0.18

STREAM FDWASTEC
    SUBSTREAM MIXED TEMP=68 PRES=1 <ATM>
    MASS-FLOW H2 50.95 / O2 92.76 / N2 0.23 / CL2 53.02 /  &
        F2 0.11 / H2O 19.83
    SUBSTREAM CISOLID TEMP=68 PRES=1 <ATM>
    MASS-FLOW C-S 326.28 / S-S 0.49 / FE-S 7.67 / SIO2-S  &
        53.01 / AL2O3-S 53.01 / BA-S 0.77 / CD-S 0.77 / CR-S 1.53

STREAM FDWASTEN
    SUBSTREAM MIXED TEMP=68 PRES=1 <ATM>
    MASS-FLOW H2 0.54 / O2 1.44 / N2 0.01 / CL2 14.88 /  &
        NO 0.66 / SO2 0.83 / H2O 354.23 / HG 0.15
    SUBSTREAM CISOLID TEMP=68 PRES=1 <ATM>
    MASS-FLOW C-S 4.77 / S-S 0.62 / SIO2-S 476.77 /  &
        AL2O3-S 476.77 / AS-S 0.06 / BA-S 0.04 / CD-S 2.63  &
        / CR-S 4.95 / PB-S 0.17 / SE-S 0.03 / AG-S 0.03

STREAM FLYASH
    SUBSTREAM MIXED TEMP=350 PRES=1 <ATM>
    SUBSTREAM CISOLID TEMP=350 PRES=1 <ATM>
    MASS-FLOW SIO2-S 43 / AL2O3-S 31 / NA2O-S 1 / FE3O4-S  &
        2 / CAO-S 2

STREAM FUELMIX1
    SUBSTREAM MIXED TEMP=68 PRES=1 <ATM> MASS-FLOW=1742
    MASS-FRAC O2 0.222 / N2 0.732 / CH4 0.046
```

```
STREAM NAOH
    SUBSTREAM CISOLID TEMP=68 PRES=1 <ATM> MASS-FLOW=77.38
    MASS-FRAC NAOH-S 1

STREAM OXYGEN
    SUBSTREAM MIXED TEMP=68 PRES=1 <ATM> MASS-FLOW=1414
    MASS-FRAC O2 1

STREAM QNCH2O
    SUBSTREAM MIXED TEMP=68 PRES=1 <ATM> MASS-FLOW=2293
    MASS-FRAC H2O 1

STREAM SCRUBH2O
    SUBSTREAM MIXED TEMP=68 PRES=1 <ATM> MASS-FLOW=5000
    MASS-FRAC H2O 1

STREAM SOIL
    SUBSTREAM MIXED TEMP=68 PRES=1 <ATM> MASS-FLOW=49.81
    MASS-FLOW H2O .100
    SUBSTREAM CISOLID TEMP=68 PRES=1 <ATM> MASS-FLOW=448.3
    MASS-FLOW SIO2-S 0.569 / AL2O3-S 0.102 / CACO3-S 0.128 /  &
        MGO-S 0.023 / NA2O-S 0.013 / K2O-S 0.024 / FE3O4-S 0.041

BLOCK BAGHOUSE SEP
    FRAC STREAM=FILTGAS SUBSTREAM=MIXED COMPS=H2 O2 N2 CL2  &
        F2 NO SO2 H2O CO2 CO HCL CH4 C-S S-S S NAOH-S  &
        NACL-S NAF-S AS CD HG SE FE SIO2 AL2O3 FE-S SIO2-S  &
        AL2O3-S AS-S BA-S CD-S CR-S PB-S SE-S AG-S CACO3-S  &
        MGO-S NA2O-S K2O-S FE3O4 FE3O4-S CAO-S NA2CO3 NA2SO4  &
        H2SO4 NA2CO3-S NA2SO4-S FRACS=1 1 1 1 1 1 1 1 1  &
        1 1 1 0 0 0 0 0 0 0 0 0 0 0 0 0 0 0 0 0 0 0  &
        0 0 0 0 0 0 0 0 0 0 0 0 0 0 1 0 0
    FRAC STREAM=FILTGAS SUBSTREAM=CISOLID COMPS=C-S S-S  &
        NAOH-S NACL-S NAF-S FE-S SIO2-S AL2O3-S AS-S BA-S  &
        CD-S CR-S PB-S SE-S AG-S CACO3-S MGO-S NA2O-S K2O-S  &
        FE3O4-S CAO-S NA2CO3-S NA2SO4-S FRACS=0 0 0 0 0 0  &
        0 0 0 0 0 0 0 0 0 0 0 0 0 0 0 0 0
    FRAC STREAM=HGPLUS SUBSTREAM=MIXED COMPS=H2 O2 N2 CL2  &
        F2 NO SO2 H2O CO2 CO HCL CH4 C-S S-S S NAOH-S  &
        NACL-S NAF-S AS CD HG SE FE SIO2 AL2O3 FE-S SIO2-S  &
        AL2O3-S AS-S BA-S CD-S CR-S PB-S SE-S AG-S CACO3-S  &
        MGO-S NA2O-S K2O-S FE3O4 FE3O4-S CAO-S NA2CO3 NA2SO4  &
        H2SO4 NA2CO3-S NA2SO4-S FRACS=0 0 0 0 0 0 0 0 0  &
        0 0 0 0 0 0 0 0 0 1 1 1 1 0 0 0 0 0 0 1 0  &
        1 0 0 1 0 0 0 0 0 0 0 0 0 0 0 0 0
    FRAC STREAM=HGPLUS SUBSTREAM=CISOLID COMPS=C-S S-S NAOH-S  &
        NACL-S NAF-S FE-S SIO2-S AL2O3-S AS-S BA-S CD-S CR-S  &
        PB-S SE-S AG-S CACO3-S MGO-S NA2O-S K2O-S FE3O4-S  &
        CAO-S NA2CO3-S NA2SO4-S FRACS=0 0 0 0 0 0 0 0 1  &
        0 1 0 0 1 0 0 0 0 0 0 0 0 0

BLOCK FEED-SEP SEP
    FRAC STREAM=SOLIDS SUBSTREAM=MIXED COMPS=H2 O2 N2 CL2  &
        F2 NO SO2 H2O CO2 CO HCL CH4 C-S S-S S NAOH-S  &
        NACL-S NAF-S AS CD HG SE FE SIO2 AL2O3 FE-S SIO2-S  &
        AL2O3-S AS-S BA-S CD-S CR-S PB-S SE-S AG-S CACO3-S  &
        MGO-S NA2O-S K2O-S FE3O4 FE3O4-S CAO-S NA2CO3 NA2SO4  &
        H2SO4 NA2CO3-S NA2SO4-S FRACS=0 0 0 0 0 0 0 0 0  &
        0 0 0 .05 .05 .05 .95 .95 .95 .95 .95 .95 .95  &
        .95 .95 .95 .95 .95 .95 .95 .95 .95 .95 .95 .95  &
        .95 .95 .95 .95 .95 .95 .95 .95 .95 .95 .95 .95
    FRAC STREAM=SOLIDS SUBSTREAM=CISOLID COMPS=C-S S-S NAOH-S  &
```

```
        NACL-S NAF-S FE-S SIO2-S AL2O3-S AS-S BA-S CD-S CR-S  &
        PB-S SE-S AG-S CACO3-S MGO-S NA2O-S K2O-S FE3O4-S  &
        CAO-S NA2CO3-S NA2SO4-S FRACS=.05 .05 .95 .95 .95  &
        .95 .95 .95 .95 .95 .95 .95 .95 .95 .95 .95 .95  &
        .95 .95 .95 .95 .95 .95

BLOCK VIT-SEP SEP
    FRAC STREAM=SLAG SUBSTREAM=MIXED COMPS=H2 O2 N2 CL2 F2  &
        NO SO2 H2O CO2 CO HCL CH4 C-S S-S S NAOH-S NACL-S  &
        NAF-S AS CD HG SE FE SIO2 AL2O3 FE-S SIO2-S AL2O3-S  &
        AS-S BA-S CD-S CR-S PB-S SE-S AG-S CACO3-S MGO-S  &
        NA2O-S K2O-S FE3O4 FE3O4-S CAO-S NA2CO3 NA2SO4 H2SO4  &
        NA2CO3-S NA2SO4-S FRACS=0 0 0 0 0 0 0 0 0 0 0 0  &
        1 1 1 1 1 1 0 0 0 0 1 1 1 1 1 1 1 1 1 1 1  &
        1 1 1 1 1 1 1 1 1 1 1 1 1 1
    FRAC STREAM=SLAG SUBSTREAM=CISOLID COMPS=C-S S-S NAOH-S  &
        NACL-S NAF-S FE-S SIO2-S AL2O3-S AS-S BA-S CD-S CR-S  &
        PB-S SE-S AG-S CACO3-S MGO-S NA2O-S K2O-S FE3O4-S  &
        CAO-S NA2CO3-S NA2SO4-S FRACS=1 1 1 1 1 1 1 1 1  &
        1 1 1 1 1 1 1 1 1 1 1 1 1 1

BLOCK L-V-SEP FLASH2
    PARAM TEMP=120 PRES=1 <ATM>

BLOCK MELTER RGIBBS
    PARAM TEMP=3000 PRES=1 <ATM> NPHASE=2 VAPOR=YES MAXIT=500
    PROD H2 / C-S SS / FE / SIO2 / AL2O3 / FE-S SS /  &
        SIO2-S SS / AL2O3-S SS / BA-S SS / CD / CD-S SS

BLOCK PLENUM RGIBBS
    PARAM TEMP=1800 PRES=1 <ATM> NPHASE=2
    PROD H2 / O2 / N2 / CL2 / F2 / NO / SO2 / H2O /  &
        CO2 / CO / HCL / C-S SS / S-S SS / S / AS /  &
        CD / HG / SE / FE-S SS / SIO2-S SS / AL2O3-S SS  &
        / BA-S SS / CR-S SS / PB-S SS / AG-S SS / MGO-S  &
        SS / NA2O-S SS / K2O-S SS / FE3O4-S SS / CAO-S SS

BLOCK Q1 RGIBBS
    PARAM TEMP=68 PRES=1 <ATM> NPHASE=2 TAPP=2132
    PROD H2 / O2 / N2 / CL2 / F2 / NO / SO2 / H2O /  &
        CO2 / CO / HCL / AS / CD / HG / SE / FE-S SS  &
        / SIO2-S SS / AL2O3-S SS / BA-S SS / CR-S SS /  &
        PB-S SS / AG-S SS / MGO-S SS / NA2O-S SS / K2O-S  &
        SS / FE3O4-S SS / CAO-S SS

BLOCK QUENCH RGIBBS
    PARAM TEMP=350 PRES=1 <ATM> NPHASE=2
    PROD H2 / O2 / N2 / CL2 / F2 / NO / SO2 / H2O /  &
        CO2 / CO / HCL / AS / CD / HG / SE / FE-S SS  &
        / SIO2-S SS / AL2O3-S SS / AS-S SS / BA-S SS /  &
        CD-S SS / CR-S SS / PB-S SS / SE-S SS / AG-S SS  &
        / MGO-S SS / NA2O-S SS / K2O-S SS / FE3O4-S SS / CAO-S SS

BLOCK SCC RGIBBS
    PARAM TEMP=2200 PRES=1 <ATM> NPHASE=2
    PROD H2 M / O2 M / N2 M / CL2 M / F2 M / NO M /  &
        SO2 M / H2O M / CO2 M / CO M / HCL / AS / CD  &
        / HG / SE / FE-S SS / SIO2-S SS / AL2O3-S SS /  &
        BA-S SS / CR-S SS / PB-S SS / AG-S SS / MGO-S  &
        SS / NA2O-S SS / K2O-S SS / FE3O4-S SS / CAO-S  &
        SS
```

```
BLOCK SCRUB RGIBBS
    PARAM TEMP=120 PRES=1 <ATM> NPHASE=2 MAXIT=500
    PROD H2 / O2 / N2 / CL2 / F2 / NO / SO2 / H2O /  &
        CO2 / CO / HCL / C-S SS / S-S SS / NAOH-S SS /  &
        NACL-S SS

BLOCK VITRIFY RGIBBS
    PARAM TEMP=3000 PRES=1 <ATM> NPHASE=2 MAXIT=50
    PROD H2 / O2 / N2 / CL2 / F2 / NO / SO2 / H2O /  &
        CO2 / CO / HCL / C-S SS / S / AS / CD / HG /  &
        SE / FE / SIO2 / AL2O3 / BA-S SS / CR-S SS /  &
        PB-S SS / AG-S SS / MGO-S SS / NA2O-S SS / K2O-S  &
        SS / FE3O4 / CAO-S SS

BLOCK DUPL1 DUPL

DESIGN-SPEC NAOH
    DEFINE CAUIN MASS-FLOW STREAM=NAOH SUBSTREAM=CISOLID  &
        COMPONENT=NAOH-S
    DEFINE CAUOUT MASS-FLOW STREAM=SCRUBOUT SUBSTREAM=CISOLID  &
        COMPONENT=NAOH-S
    SPEC "CAUIN-100.*CAUOUT" TO "0"
    TOL-SPEC "0.01"
    VARY STREAM-VAR STREAM=NAOH SUBSTREAM=CISOLID  &
        VARIABLE=MASS-FLOW
    LIMITS "1" "1000"

DESIGN-SPEC OXYGEN
    DEFINE OXIN1 MASS-FLOW STREAM=OXYGEN SUBSTREAM=MIXED  &
        COMPONENT=O2
    DEFINE OXIN2 MASS-FLOW STREAM=ORGANICS SUBSTREAM=MIXED  &
        COMPONENT=O2
    DEFINE OXOUT MASS-FLOW STREAM=EFFLUENT SUBSTREAM=MIXED  &
        COMPONENT=O2
    SPEC "OXIN1+OXIN2" TO "6.0*OXOUT"
    TOL-SPEC "0.1"
    VARY STREAM-VAR STREAM=OXYGEN SUBSTREAM=MIXED  &
        VARIABLE=MASS-FLOW
    LIMITS "1" "100000"

DESIGN-SPEC QQUENCH
    DEFINE QQNCH2 BLOCK-VAR BLOCK=QUENCH VARIABLE=QCALC  &
        SENTENCE=PARAM
    SPEC "QQNCH2" TO "0"
    TOL-SPEC "1."
    VARY STREAM-VAR STREAM=QNCH2O SUBSTREAM=MIXED  &
        VARIABLE=MASS-FLOW
    LIMITS "1" "50000"

DESIGN-SPEC QSCC
    DEFINE QSCC2 BLOCK-VAR BLOCK=SCC VARIABLE=QCALC  &
        SENTENCE=PARAM
    DEFINE Q2 BLOCK-VAR BLOCK=Q1 VARIABLE=QCALC SENTENCE=PARAM
    SPEC "QSCC2" TO "0.05*Q2"
    TOL-SPEC "1."
    VARY STREAM-VAR STREAM=FUELMIX1 SUBSTREAM=MIXED  &
        VARIABLE=MASS-FLOW
    LIMITS "1" "10000"

DESIGN-SPEC SCRUBH2O
    DEFINE MASSAL STREAM-VAR STREAM=SCRUBBOT SUBSTREAM=CISOLID  &
        VARIABLE=MASS-FLOW
```

```
    DEFINE SCRUB STREAM-VAR STREAM=SCRUBH2O SUBSTREAM=MIXED  &
        VARIABLE=MASS-FLOW
    DEFINE NAOH STREAM-VAR STREAM=NAOH SUBSTREAM=CISOLID  &
        VARIABLE=MASS-FLOW
    SPEC "SCRUB" TO "20*MASSAL"
    TOL-SPEC "0.01"
    VARY STREAM-VAR STREAM=SCRUBH2O SUBSTREAM=MIXED  &
        VARIABLE=MASS-FLOW
    LIMITS "NAOH" "5000"

DESIGN-SPEC SOILH2O
    DEFINE SLAG1 STREAM-VAR STREAM=SLAG SUBSTREAM=MIXED  &
        VARIABLE=MASS-FLOW
    DEFINE SLAG2 STREAM-VAR STREAM=SLAG SUBSTREAM=CISOLID  &
        VARIABLE=MASS-FLOW
    DEFINE SOIL STREAM-VAR STREAM=SOIL SUBSTREAM=MIXED  &
        VARIABLE=MASS-FLOW
    SPEC "30.*SOIL" TO "SLAG1+SLAG2"
    TOL-SPEC "0.01"
    VARY STREAM-VAR STREAM=SOIL SUBSTREAM=MIXED  &
        VARIABLE=MASS-FLOW
    LIMITS "1" "1000"

DESIGN-SPEC SOILSOL
    DEFINE SLAG1 STREAM-VAR STREAM=SLAG SUBSTREAM=MIXED  &
        VARIABLE=MASS-FLOW
    DEFINE SLAG2 STREAM-VAR STREAM=SLAG SUBSTREAM=CISOLID  &
        VARIABLE=MASS-FLOW
    DEFINE SOIL STREAM-VAR STREAM=SOIL SUBSTREAM=CISOLID  &
        VARIABLE=MASS-FLOW
    SPEC "3.33333*SOIL" TO "SLAG1+SLAG2"
    TOL-SPEC "0.01"
    VARY STREAM-VAR STREAM=SOIL SUBSTREAM=CISOLID  &
        VARIABLE=MASS-FLOW
    LIMITS "1" "1000"

CONV-OPTIONS
    SECANT MAX-STEP-SIZ=.05 BRACKET=YES

STREAM-REPOR NOSORT MOLEFLOW MASSFLOW PROPERTIES=ALL-SUBS
```

System K-1

```
TITLE 'ITTS PHASE II - THERMAL DESORBER W/ MEO - SYSK1-4 (main)'

IN-UNITS ENG

DEF-STREAMS MIXCISLD ALL

DIAGNOSTICS
    TERMINAL SIM-LEVEL=8 CONV-LEVEL=8

RUN-CONTROL MAX-TIME=1800

DESCRIPTION "
        SOIL INCLUDES H2O AND CACO3.  CACO3 CAN ONLY BE USED AS A
        SOLID IN RGIBBS (LACKS VAPOR DATA).
        For MOD 2, SCRUBBER MODELED WITH RGIBBS RATHER THAN RADFRAC.
        MOD 3, REL 9, SEPARATE ORGANIC LIQUIDS AND OIL FROM COMBUSTIBLES,
          AND ADD AQUEOUS LIQUIDS. "

DATABANKS COMBUST  / INORGANIC  / PURECOMP  / SOLIDS  /  &
        NOASPENPCD

PROP-SOURCES COMBUST  / INORGANIC  / PURECOMP  / SOLIDS

COMPONENTS
    H2 H2 H2 /
    O2 O2 O2 /
    N2 N2 N2 /
    CL2 CL2 CL2 /
    F2 F2 F2 /
    NO NO NO /
    SO2 O2S SO2 /
    H2O H2O H2O /
    CO2 CO2 CO2 /
    CO CO CO /
    HCL HCL HCL /
    CH4 CH4 CH4 /
    C-S C C-S /
    S-S S S-S /
    S S S /
    NAOH-S NAOH NAOH-S /
    NACL-S NACL NACL-S /
    NAF-S NAF NAF-S /
    AS AS AS /
    CD CD CD /
    HG HG HG /
    SE SE SE /
    FE FE FE /
    SIO2 SIO2 SIO2 /
    AL2O3 AL2O3 AL2O3 /
    FE-S FE FE-S /
    SIO2-S SIO2 SIO2-S /
    AL2O3-S AL2O3 AL2O3-S /
    AS-S AS AS-S /
    BA-S BA BA-S /
    CD-S CD CD-S /
    CR-S CR CR-S /
    PB-S PB PB-S /
    SE-S SE SE-S /
    AG-S AG AG-S /
```

```
    CACO3-S CACO3 CACO3-S /
    MGO-S MGO MGO-S /
    NA2O-S NA2O NA2O-S /
    K2O-S K2O K2O-S /
    FE3O4 FE3O4 FE3O4 /
    FE3O4-S FE3O4 FE3O4-S /
    CAO-S CAO CAO-S /
    COSO4-S COSO4:A COSO4-S /
    H2SO4 H2SO4 H2SO4 /
    H2O-2 H2O H2O-2

FLOWSHEET
    BLOCK SEPRATR IN=DESORBED OUT=SOLIDS KILNVAP
    BLOCK L-V-SEP IN=SCRUBOUT OUT=SCRUBVAP SCRUBBOT
    BLOCK COND-SEP IN=COOLED OUT=CONDENS8 VAPORS HGPLUS
    BLOCK SCRUB IN=NAOH SCRUBH2O GASES OUT=SCRUBOUT
    BLOCK MELTER IN=FDMETMLT OUT=METAL
    BLOCK MEO-UNIT IN=WATER FDWOLIQS CONDENS8 FDAQORGS  &
        ELECTROL H2SO4 OUT=MEOGAS
    BLOCK CATALYST IN=VAPORS AIR HYDROGEN SCRUBVAP OUT= &
        EXHAUST2
    BLOCK MEO-SEP IN=MEOGAS OUT=GASES HYDROGEN H2SO4 COSO4  &
        H2O-2
    BLOCK HEATER IN=FUELMIX1 OUT=EXHAUST1
    BLOCK DESORBER IN=FDWASTEN FDWC-ORG OUT=DESORBED
    BLOCK CONDENSR IN=KILNVAP OUT=COOLED

PROPERTIES SOLIDS
    PROPERTIES IDEAL / RKS-BM

PROP-SET ALL-SUBS TEMP PRES VFRAC UNITS='ATM' SUBSTREAM=ALL

STREAM AIR
    SUBSTREAM MIXED TEMP=68 PRES=1 <ATM> MASS-FLOW=2960.2
    MASS-FLOW O2 0.233 / N2 0.767

STREAM ELECTROL
    SUBSTREAM MIXED TEMP=68 PRES=1 <ATM>
    MASS-FLOW H2SO4 1.05903 / H2O-2 953.13
    SUBSTREAM CISOLID TEMP=68 PRES=1 <ATM>
    MASS-FLOW COSO4-S 82.0751

STREAM FDAQORGS
    SUBSTREAM MIXED TEMP=68 PRES=1 <ATM>
    MASS-FLOW H2 0.02 / CL2 0.13 / H2O 15.44
    SUBSTREAM CISOLID TEMP=68 PRES=1 <ATM>
    MASS-FLOW C-S 0.17

STREAM FDMETMLT
    SUBSTREAM MIXED TEMP=68 PRES=1 <ATM> MASS-FLOW=1.2
    MASS-FLOW H2 2.42
    SUBSTREAM CISOLID TEMP=68 PRES=1 <ATM> MASS-FLOW=147.8
    MASS-FLOW C-S 14.44 / FE-S 282.02 / SIO2-S 0.035 /  &
        AL2O3-S 0.035 / BA-S 0.87 / CD-S 0.18

STREAM FDWASTEN
    SUBSTREAM MIXED TEMP=68 PRES=1 <ATM>
    MASS-FLOW H2 0.54 / O2 1.44 / N2 0.01 / CL2 14.88 /  &
        NO 0.66 / SO2 0.83 / H2O 354.23 / HG 0.15
    SUBSTREAM CISOLID TEMP=68 PRES=1 <ATM>
    MASS-FLOW C-S 4.77 / S-S 0.62 / SIO2-S 476.77 /  &
        AL2O3-S 476.77 / AS-S 0.06 / BA-S 0.04 / CD-S 2.63  &
```

```
        / CR-S 4.95 / PB-S 0.17 / SE-S 0.03 / AG-S 0.03

STREAM FDWC-ORG
    SUBSTREAM MIXED TEMP=68 PRES=1 <ATM>
    MASS-FLOW H2 47.21 / O2 91.70 / N2 0.23 / CL2 35.12 /  &
        F2 0.11 / H2O 19.24
    SUBSTREAM CISOLID TEMP=68 PRES=1 <ATM>
    MASS-FLOW C-S 299.15 / S-S 0.39 / FE-S 7.67 / SIO2-S  &
        52.91 / AL2O3-S 52.91 / BA-S 0.77 / CD-S 0.77 / CR-S 1.53

STREAM FDWOLIQS
    SUBSTREAM MIXED TEMP=68 PRES=1 <ATM>
    MASS-FLOW H2 3.74 / O2 1.06 / CL2 17.90 / H2O 0.59
    SUBSTREAM CISOLID TEMP=68 PRES=1 <ATM>
    MASS-FLOW C-S 27.13 / S-S 0.10 / SIO2-S 0.10 / AL2O3-S 0.10

STREAM FUELMIX1
    SUBSTREAM MIXED TEMP=68 PRES=1 <ATM> MASS-FLOW=1282.9
    MASS-FLOW O2 0.222 / N2 0.732 / CH4 0.046

STREAM H2SO4
    SUBSTREAM MIXED TEMP=140 PRES=1 <ATM>
    MASS-FLOW H2SO4 103.863

STREAM NAOH
    SUBSTREAM MIXED TEMP=68 PRES=1 <ATM>
    SUBSTREAM CISOLID TEMP=68 PRES=1 <ATM> MASS-FLOW=30.8449
    MASS-FLOW NAOH-S 1

STREAM SCRUBH2O
    SUBSTREAM MIXED TEMP=68 PRES=1 <ATM>
    MASS-FLOW H2O 1

STREAM WATER
    SUBSTREAM MIXED TEMP=68 PRES=1 <ATM> MASS-FLOW=.1
    MASS-FLOW H2O 1

BLOCK COND-SEP SEP
    FRAC STREAM=VAPORS SUBSTREAM=MIXED COMPS=H2 O2 N2 CL2  &
        F2 NO SO2 H2O CO2 CO HCL CH4 C-S S-S S NAOH-S  &
        NACL-S NAF-S AS CD HG SE FE SIO2 AL2O3 FE-S SIO2-S  &
        AL2O3-S AS-S BA-S CD-S CR-S PB-S SE-S AG-S CACO3-S  &
        MGO-S NA2O-S K2O-S FE3O4 FE3O4-S CAO-S FRACS=.1 .1  &
        .1 .1 .1 .1 .1 .1 .1 .1 .1 .1 .1 .1 .1 .1 .1  &
        .1 0 0 0 0 0 0 0 0 0 0 0 0 0 0 0 0 0 0 0 0 0 0 0 0
    FRAC STREAM=VAPORS SUBSTREAM=CISOLID COMPS=C-S S-S NAOH-S  &
        NACL-S NAF-S FE-S SIO2-S AL2O3-S AS-S BA-S CD-S CR-S  &
        PB-S SE-S AG-S CACO3-S MGO-S NA2O-S K2O-S FE3O4-S  &
        CAO-S FRACS=.1 .1 .1 .1 .1 0 0 0 0 0 0 0 0 0  &
        0 0 0 0 0 0 0
    FRAC STREAM=HGPLUS SUBSTREAM=MIXED COMPS=H2 O2 N2 CL2  &
        F2 NO SO2 H2O CO2 CO HCL CH4 C-S S-S S NAOH-S  &
        NACL-S NAF-S AS CD HG SE FE SIO2 AL2O3 FE-S SIO2-S  &
        AL2O3-S AS-S BA-S CD-S CR-S PB-S SE-S AG-S CACO3-S  &
        MGO-S NA2O-S K2O-S FE3O4 FE3O4-S CAO-S FRACS=0 0 0  &
        0 0 0 0 0 0 0 0 0 0 0 0 0 0 0 0 1 1 1 1 0 0  &
        0 0 0 0 1 0 1 0 0 1 0 0 0 0 0 0 0 0
    FRAC STREAM=HGPLUS SUBSTREAM=CISOLID COMPS=C-S S-S NAOH-S  &
        NACL-S NAF-S FE-S SIO2-S AL2O3-S AS-S BA-S CD-S CR-S  &
        PB-S SE-S AG-S CACO3-S MGO-S NA2O-S K2O-S FE3O4-S  &
        CAO-S FRACS=0 0 0 0 0 0 0 0 1 0 1 0 0 1 0 0 0 0 0 0 0
```

```
BLOCK MEO-SEP SEP
    FRAC STREAM=GASES SUBSTREAM=MIXED COMPS=H2 O2 N2 CL2 F2  &
        NO SO2 H2O CO2 CO HCL CH4 C-S S-S S NAOH-S NACL-S  &
        NAF-S AS CD HG SE FE SIO2 AL2O3 FE-S SIO2-S AL2O3-S  &
        AS-S BA-S CD-S CR-S PB-S SE-S AG-S CACO3-S MGO-S  &
        NA2O-S K2O-S FE3O4 FE3O4-S CAO-S COSO4-S H2SO4 H2O-2  &
        FRACS=0 1 1 1 1 1 1 1 1 1 1 1 1 1 1 1 1 1 1  &
        1 1 1 1 1 1 1 1 1 1 1 1 1 1 1 1 1 1 1 1 1 1 1 1 1 0 0 0
    FRAC STREAM=GASES SUBSTREAM=CISOLID COMPS=C-S S-S NAOH-S  &
        NACL-S NAF-S FE-S SIO2-S AL2O3-S AS-S BA-S CD-S CR-S  &
        PB-S SE-S AG-S CACO3-S MGO-S NA2O-S K2O-S FE3O4-S  &
        CAO-S COSO4-S FRACS=1 1 1 1 1 1 1 1 1 1 1 1 1  &
        1 1 1 1 1 1 1 1 0
    FRAC STREAM=HYDROGEN SUBSTREAM=MIXED COMPS=H2 O2 N2 CL2  &
        F2 NO SO2 H2O CO2 CO HCL CH4 C-S S-S S NAOH-S  &
        NACL-S NAF-S AS CD HG SE FE SIO2 AL2O3 FE-S SIO2-S  &
        AL2O3-S AS-S BA-S CD-S CR-S PB-S SE-S AG-S CACO3-S  &
        MGO-S NA2O-S K2O-S FE3O4 FE3O4-S CAO-S COSO4-S H2SO4  &
        H2O-2 FRACS=1 0 0 0 0 0 0 0 0 0 0 0 0 0 0 0  &
        0 0 0 0 0 0 0 0 0 0 0 0 0 0 0 0 0 0 0 0 0  &
        0 0 0 0 0 0 0 0
    FRAC STREAM=HYDROGEN SUBSTREAM=CISOLID COMPS=C-S S-S  &
        NAOH-S NACL-S NAF-S FE-S SIO2-S AL2O3-S AS-S BA-S  &
        CD-S CR-S PB-S SE-S AG-S CACO3-S MGO-S NA2O-S K2O-S  &
        FE3O4-S CAO-S COSO4-S FRACS=0 0 0 0 0 0 0 0 0 0  &
        0 0 0 0 0 0 0 0 0 0 0 0
    FRAC STREAM=H2SO4 SUBSTREAM=MIXED COMPS=H2 O2 N2 CL2 F2  &
        NO SO2 H2O CO2 CO HCL CH4 C-S S-S S NAOH-S NACL-S  &
        NAF-S AS CD HG SE FE SIO2 AL2O3 FE-S SIO2-S AL2O3-S  &
        AS-S BA-S CD-S CR-S PB-S SE-S AG-S CACO3-S MGO-S  &
        NA2O-S K2O-S FE3O4 FE3O4-S CAO-S COSO4-S H2SO4 H2O-2  &
        FRACS=0 0 0 0 0 0 0 0 0 0 0 0 0 0 0 0 0 0  &
        0 0 0 0 0 0 0 0 0 0 0 0 0 0 0 0 0 0 0 0 0  &
        0 0 0 0 0.99 0
    FRAC STREAM=H2SO4 SUBSTREAM=CISOLID COMPS=C-S S-S NAOH-S  &
        NACL-S NAF-S FE-S SIO2-S AL2O3-S AS-S BA-S CD-S CR-S  &
        PB-S SE-S AG-S CACO3-S MGO-S NA2O-S K2O-S FE3O4-S  &
        CAO-S COSO4-S FRACS=0 0 0 0 0 0 0 0 0 0 0 0 0  &
        0 0 0 0 0 0 0 0 0
    FRAC STREAM=COSO4 SUBSTREAM=MIXED COMPS=H2 O2 N2 CL2 F2  &
        NO SO2 H2O CO2 CO HCL CH4 C-S S-S S NAOH-S NACL-S  &
        NAF-S AS CD HG SE FE SIO2 AL2O3 FE-S SIO2-S AL2O3-S  &
        AS-S BA-S CD-S CR-S PB-S SE-S AG-S CACO3-S MGO-S  &
        NA2O-S K2O-S FE3O4 FE3O4-S CAO-S COSO4-S H2SO4 H2O-2  &
        FRACS=0 0 0 0 0 0 0 0 0 0 0 0 0 0 0 0 0 0  &
        0 0 0 0 0 0 0 0 0 0 0 0 0 0 0 0 0 0 0 0 0 0 0 0 1 0 0
    FRAC STREAM=COSO4 SUBSTREAM=CISOLID COMPS=C-S S-S NAOH-S  &
        NACL-S NAF-S FE-S SIO2-S AL2O3-S AS-S BA-S CD-S CR-S  &
        PB-S SE-S AG-S CACO3-S MGO-S NA2O-S K2O-S FE3O4-S  &
        CAO-S COSO4-S FRACS=0 0 0 0 0 0 0 0 0 0 0 0 0  &
        0 0 0 0 0 0 0 0 1
    FLASH-SPECS COSO4 KODE=0

BLOCK SEPRATR SEP
    FRAC STREAM=SOLIDS SUBSTREAM=MIXED COMPS=H2 O2 N2 CL2  &
        F2 NO SO2 H2O CO2 CO HCL CH4 C-S S-S S NAOH-S  &
        NACL-S NAF-S AS CD HG SE FE SIO2 AL2O3 FE-S SIO2-S  &
        AL2O3-S AS-S BA-S CD-S CR-S PB-S SE-S AG-S CACO3-S  &
        MGO-S NA2O-S K2O-S FE3O4 FE3O4-S CAO-S H2O-2 FRACS=.8  &
        .8 .8 .8 .8 .8 .8 .2 .8 .8 .8 .8 .8 1 1 1 1 1  &
        0 0 0 0 1 1 1 1 1 1 1 1 1 1 1 1 1 1 1 1 1 1 1 1 1 1 0
    FRAC STREAM=SOLIDS SUBSTREAM=CISOLID COMPS=C-S S-S NAOH-S  &
```

```
        NACL-S NAF-S FE-S SIO2-S AL2O3-S AS-S BA-S CD-S CR-S  &
        PB-S SE-S AG-S CACO3-S MGO-S NA2O-S K2O-S FE3O4-S  &
        CAO-S FRACS=.8 1 1 1 1 1 1 1 1 1 1 1 1 1 1 1 1 1 1 1 1 1

BLOCK L-V-SEP FLASH2
    PARAM TEMP=120 PRES=1 <ATM>

BLOCK CATALYST RSTOIC
    PARAM TEMP=1500 PRES=1 <ATM>
    STOIC 1 MIXED CO -1 / O2 -0.5 / CO2 1
    STOIC 2 MIXED CH4 -1 / O2 -2 / H2O 2 / CO2 1
    STOIC 3 MIXED H2 -1 / O2 -0.5 / H2O 1
    STOIC 4 MIXED O2 -1 / CISOLID C-S -1 / MIXED CO2 1
    CONV 1 MIXED CO 1
    CONV 2 MIXED CH4 1
    CONV 3 MIXED H2 1
    CONV 4 CISOLID C-S 1

BLOCK MEO-UNIT RSTOIC
    PARAM TEMP=140 PRES=1 <ATM>
    STOIC 1 MIXED CO -1 / O2 -0.5 / CO2 1
    STOIC 2 MIXED H2O -1 / H2 1 / O2 0.5
    STOIC 3 MIXED CH4 -1 / O2 -1 / CO2 1 / H2 2
    STOIC 4 MIXED HCL -2 / H2 1 / CL2 1
    STOIC 5 MIXED O2 -1 / CISOLID C-S -1 / MIXED CO2 1
    CONV 1 MIXED CO 1
    CONV 2 MIXED H2O 1
    CONV 3 MIXED CH4 1
    CONV 4 MIXED HCL 1
    CONV 5 CISOLID C-S 1

BLOCK CONDENSR RGIBBS
    PARAM TEMP=80 PRES=1 <ATM> NPHASE=2
    PROD H2 / O2 / N2 / CL2 / F2 / NO / SO2 / H2O /  &
        C-S SS / S-S SS / S / AS / CD / HG / SE /  &
        FE-S SS / SIO2-S SS / AL2O3-S SS / AS-S SS /  &
        BA-S SS / CD-S SS / CR-S SS / PB-S SS / SE-S SS / AG-S SS
    PROD-FRAC H2 1 / O2 1 / H2O 1

BLOCK DESORBER RGIBBS
    PARAM TEMP=600 PRES=1 <ATM> NPHASE=2 CHEMEQ=YES
    PROD H2 / O2 / N2 / CL2 / F2 / NO / SO2 / H2O /  &
        C-S SS / S-S SS / S / AS / CD / HG / SE /  &
        FE-S SS / SIO2-S SS / AL2O3-S SS / AS-S SS /  &
        BA-S SS / CD-S SS / CR-S SS / PB-S SS / SE-S SS / AG-S SS
    PROD-FRAC H2O 1 / O2 1 / H2 1

BLOCK HEATER RGIBBS
    PARAM TEMP=1400 PRES=1 <ATM>
    PROD H2 / O2 / N2 / NO / H2O / CO2 / CO

BLOCK MELTER RGIBBS
    PARAM TEMP=3000 PRES=1 <ATM> NPHASE=2 VAPOR=YES
    PROD H2 M / C-S SS / FE / SIO2 / AL2O3 / FE-S SS /  &
        SIO2-S SS / AL2O3-S SS / BA-S SS / CD / CD-S SS

BLOCK SCRUB RGIBBS
    PARAM TEMP=120 PRES=1 <ATM> NPHASE=2 CHEMEQ=YES MAXIT=500  &
        NPSOL=0
    PROD O2 / N2 / NO / SO2 / H2O / CO2 / HCL / S-S  &
        SS / NAOH-S SS / NACL-S SS / NAF-S SS / SIO2-S  &
        SS / AL2O3-S SS
```

```
DESIGN-SPEC AIR
    DEFINE OXIN1 MASS-FLOW STREAM=AIR SUBSTREAM=MIXED  &
        COMPONENT=O2
    DEFINE OXIN2 MASS-FLOW STREAM=VAPORS SUBSTREAM=MIXED  &
        COMPONENT=O2
    DEFINE OXIN3 MASS-FLOW STREAM=SCRUBVAP SUBSTREAM=MIXED  &
        COMPONENT=O2
    DEFINE OXOUT MASS-FLOW STREAM=EXHAUST2 SUBSTREAM=MIXED  &
        COMPONENT=O2
    SPEC "OXIN1+OXIN2+OXIN3" TO "2.0*OXOUT"
    TOL-SPEC "0.01"
    VARY STREAM-VAR STREAM=AIR SUBSTREAM=MIXED  &
        VARIABLE=MASS-FLOW
    LIMITS "1" "10000"

DESIGN-SPEC ELECTMIX
    DEFINE A1 STREAM-VAR STREAM=FDAQORGS SUBSTREAM=MIXED  &
        VARIABLE=MASS-FLOW
    DEFINE A2 STREAM-VAR STREAM=FDAQORGS SUBSTREAM=CISOLID  &
        VARIABLE=MASS-FLOW
    DEFINE A MASS-FLOW STREAM=FDAQORGS SUBSTREAM=MIXED  &
        COMPONENT=H2O
    DEFINE L1 STREAM-VAR STREAM=FDWOLIQS SUBSTREAM=MIXED  &
        VARIABLE=MASS-FLOW
    DEFINE L2 STREAM-VAR STREAM=FDWOLIQS SUBSTREAM=CISOLID  &
        VARIABLE=MASS-FLOW
    DEFINE L MASS-FLOW STREAM=FDWOLIQS SUBSTREAM=MIXED  &
        COMPONENT=H2O
    DEFINE C1 STREAM-VAR STREAM=CONDENS8 SUBSTREAM=MIXED  &
        VARIABLE=MASS-FLOW
    DEFINE C2 STREAM-VAR STREAM=CONDENS8 SUBSTREAM=CISOLID  &
        VARIABLE=MASS-FLOW
    DEFINE C MASS-FLOW STREAM=CONDENS8 SUBSTREAM=MIXED  &
        COMPONENT=H2O
    DEFINE ELECT STREAM-VAR STREAM=ELECTROL SUBSTREAM=MIXED  &
        VARIABLE=MASS-FLOW
    SPEC "A1+A2+L1+L2+C1+C2-A-L-C " TO "ELECT/6.82"
    TOL-SPEC "0.01"
    VARY STREAM-VAR STREAM=ELECTROL SUBSTREAM=MIXED  &
        VARIABLE=MASS-FLOW
    LIMITS "0.1" "10000"

DESIGN-SPEC ELECTSOL
    DEFINE MIX STREAM-VAR STREAM=ELECTROL SUBSTREAM=MIXED  &
        VARIABLE=MASS-FLOW
    DEFINE SOL STREAM-VAR STREAM=ELECTROL SUBSTREAM=CISOLID  &
        VARIABLE=MASS-FLOW
    SPEC "SOL" TO "MIX*77.5/901."
    TOL-SPEC "0.01"
    VARY STREAM-VAR STREAM=ELECTROL SUBSTREAM=CISOLID  &
        VARIABLE=MASS-FLOW
    LIMITS "1" "1000"

DESIGN-SPEC NAOH
    DEFINE CAUIN MASS-FLOW STREAM=NAOH SUBSTREAM=CISOLID  &
        COMPONENT=NAOH-S
    DEFINE CAUOUT MASS-FLOW STREAM=SCRUBOUT SUBSTREAM=CISOLID  &
        COMPONENT=NAOH-S
    SPEC "CAUIN" TO "CAUOUT*100."
    TOL-SPEC "0.01"
    VARY STREAM-VAR STREAM=NAOH SUBSTREAM=CISOLID  &
        VARIABLE=MASS-FLOW
```

```
    LIMITS "1." "100"

DESIGN-SPEC QHEATER
    DEFINE QIN BLOCK-VAR BLOCK=DESORBER VARIABLE=QCALC  &
        SENTENCE=PARAM
    DEFINE QOUT BLOCK-VAR BLOCK=HEATER VARIABLE=QCALC  &
        SENTENCE=PARAM
    SPEC "1.05*QIN+QOUT" TO "0"
    TOL-SPEC "1."
    VARY STREAM-VAR STREAM=FUELMIX1 SUBSTREAM=MIXED  &
        VARIABLE=MASS-FLOW
    LIMITS "1" "10000"

DESIGN-SPEC SCRUBH2O
    DEFINE MASSAL STREAM-VAR STREAM=SCRUBBOT SUBSTREAM=CISOLID  &
        VARIABLE=MASS-FLOW
    DEFINE SCRUB STREAM-VAR STREAM=SCRUBH2O SUBSTREAM=MIXED  &
        VARIABLE=MASS-FLOW
    DEFINE NAOH STREAM-VAR STREAM=NAOH SUBSTREAM=CISOLID  &
        VARIABLE=MASS-FLOW
    SPEC "SCRUB" TO "20*MASSAL"
    TOL-SPEC "0.01"
    VARY STREAM-VAR STREAM=SCRUBH2O SUBSTREAM=MIXED  &
        VARIABLE=MASS-FLOW
    LIMITS "NAOH" "5000"

DESIGN-SPEC WATER
    DEFINE OX1 MASS-FLOW STREAM=WATER SUBSTREAM=MIXED  &
        COMPONENT=H2O
    DEFINE OX2 MASS-FLOW STREAM=CONDENS8 SUBSTREAM=MIXED  &
        COMPONENT=H2O
    DEFINE OX3 MASS-FLOW STREAM=FDWOLIQS SUBSTREAM=MIXED  &
        COMPONENT=O2
    DEFINE OX4 MASS-FLOW STREAM=FDAQORGS SUBSTREAM=MIXED  &
        COMPONENT=H2O
    DEFINE OXOUT MASS-FLOW STREAM=MEOGAS SUBSTREAM=MIXED  &
        COMPONENT=O2
    SPEC "(16/18)*(OX1+OX2+OX4)+OX3" TO "6.*OXOUT"
    TOL-SPEC "0.1"
    VARY STREAM-VAR STREAM=WATER SUBSTREAM=MIXED  &
        VARIABLE=MASS-FLOW
    LIMITS "0.1" "10000"

CONV-OPTIONS
    SECANT MAX-STEP-SIZ=.05 BRACKET=YES

STREAM-REPOR NOSORT MOLEFLOW MASSFLOW PROPERTIES=ALL-SUBS
```

System L-1

```
TITLE 'ITTS PHASE II - THERMAL DESORBER W/ SCWO - SYSL1-3 (main)'

IN-UNITS ENG

DEF-STREAMS MIXCISLD ALL

RUN-CONTROL MAX-TIME=1800

DESCRIPTION "ACCEPTS COMBUSTIBLE AND NON-COMBUSTIBLE WASTES.
        For MOD 2, SCRUBBER MODELED AS RGIBBS RATHER THAN RADFRAC.
        MOD 3, BREAK OUT ORGANIC LIQUIDS & OIL FROM COMBUSTIBLE WASTE,
               ADD AQUEOUS LIQUIDS STREAM.       "

DATABANKS COMBUST  / INORGANIC  / PURECOMP  / SOLIDS  /  &
        NOASPENPCD

PROP-SOURCES COMBUST  / INORGANIC  / PURECOMP  / SOLIDS

COMPONENTS
    H2 H2 H2 /
    O2 O2 O2 /
    N2 N2 N2 /
    CL2 CL2 CL2 /
    F2 F2 F2 /
    NO NO NO /
    SO2 O2S SO2 /
    H2O H2O H2O /
    CO2 CO2 CO2 /
    CO CO CO /
    HCL HCL HCL /
    CH4 CH4 CH4 /
    C-S C C-S /
    S-S S S-S /
    S S S /
    NAOH-S NAOH NAOH-S /
    NACL-S NACL NACL-S /
    NAF-S NAF NAF-S /
    AS AS AS /
    CD CD CD /
    HG HG HG /
    SE SE SE /
    FE FE FE /
    SIO2 SIO2 SIO2 /
    AL2O3 AL2O3 AL2O3 /
    FE-S FE FE-S /
    SIO2-S SIO2 SIO2-S /
    AL2O3-S AL2O3 AL2O3-S /
    AS-S AS AS-S /
    BA-S BA BA-S /
    CD-S CD CD-S /
    CR-S CR CR-S /
    PB-S PB PB-S /
    SE-S SE SE-S /
    AG-S AG AG-S /
    CACO3-S CACO3 CACO3-S /
    MGO-S MGO MGO-S /
    NA2O-S NA2O NA2O-S /
    K2O-S K2O K2O-S /
    FE3O4 FE3O4 FE3O4 /
```

```
    FE3O4-S FE3O4 FE3O4-S /
    CAO-S CAO CAO-S

HENRY-COMPS GLOBAL CO2 CL2 SO2 HCL

FLOWSHEET
    BLOCK SEPRATR IN=DESORBED OUT=SOLIDS KILNVAP
    BLOCK SCWO-SEP IN=SCWOPROD OUT=SALTSOLN RECYCLE OTHER
    BLOCK FLASH IN=OTHER NON-COND OUT=OFFGAS BOTTOMS
    BLOCK SCWO IN=COMPRESS LIQUID RECYCLE OUT=SCWOPROD
    BLOCK DESORBER IN=FDWC-ORG FDWASTEN OUT=DESORBED
    BLOCK MELTER IN=FDMETMLT OUT=METAL
    BLOCK 5-STAGEC IN=OXYGEN OUT=COMPRESS
    BLOCK PUMP IN=CONDENS8 FDAQORGS FDWOLIQS WATER NAOH OUT= &
        LIQUID
    BLOCK CONDENSR IN=KILNVAP OUT=COOLED
    BLOCK COND-SEP IN=COOLED OUT=VAPORS CONDENS8 HGPLUS
    BLOCK CATALYST IN=VAPORS AIR OUT=EXHAUST2
    BLOCK EVAPOR8R IN=SALTSOLN BOTTOMS OUT=VAPOR2 CONCSOLN
    BLOCK CONDENS2 IN=VAPOR2 OUT=NON-COND CONDENSD
    BLOCK HEATER IN=FUELMIX1 OUT=EXHAUST1

PROPERTIES SOLIDS
    PROPERTIES IDEAL / PENG-ROB / RKS-BM

PROP-DATA PRKIJ-1
    IN-UNITS ENG
    PROP-LIST PRKIJ
    BPVAL H2 N2 .1030000
    BPVAL H2 CO2 -.1622000
    BPVAL H2 CO .0919000
    BPVAL H2 CH4 .0156000
    BPVAL O2 N2 -.0119000
    BPVAL N2 CO2 -.0170000
    BPVAL N2 CO .0307000
    BPVAL N2 CH4 .0311000
    BPVAL N2 H2 .1030000
    BPVAL N2 O2 -.0119000
    BPVAL N2 SO2 .0800000
    BPVAL SO2 N2 .0800000
    BPVAL SO2 CH4 .1356000
    BPVAL H2O CO2 .1200000
    BPVAL CO2 N2 -.0170000
    BPVAL CO2 CH4 .0919000
    BPVAL CO2 H2 -.1622000
    BPVAL CO2 H2O .1200000
    BPVAL CO N2 .0307000
    BPVAL CO CH4 .0300000
    BPVAL CO H2 .0919000
    BPVAL CH4 N2 .0311000
    BPVAL CH4 CO2 .0919000
    BPVAL CH4 CO .0300000
    BPVAL CH4 H2 .0156000
    BPVAL CH4 SO2 .1356000

PROP-DATA HENRY-1
    IN-UNITS ENG
    PROP-LIST HENRY
    BPVAL CL2 H2O -116.9781 4371.516 19.18540 -4.9559E-3  &
        49.73000 103.7300
    BPVAL SO2 H2O 17.90421 -5171.328 -.3028800 0.0 49.73000  &
        235.1300
```

```
    BPVAL CO2 H2O 175.2762 -15734.79 -21.66900 6.12550E-4  &
        31.73000 175.7300
    BPVAL HCL H2O -49.78140 2187.000 8.370700 -5.3294E-3  &
        -4.000000 68.00000

PROP-SET ALL-SUBS TEMP PRES VFRAC UNITS='ATM' SUBSTREAM=ALL

STREAM AIR
    SUBSTREAM MIXED TEMP=68 PRES=1 <ATM> MASS-FLOW=10000
    MASS-FLOW O2 0.233 / N2 0.767

STREAM FDAQORGS
    SUBSTREAM MIXED TEMP=68 PRES=1 <ATM>
    MASS-FLOW H2 0.02 / CL2 0.13 / H2O 15.44
    SUBSTREAM CISOLID TEMP=68 PRES=1 <ATM>
    MASS-FLOW C-S 0.17

STREAM FDMETMLT
    SUBSTREAM MIXED TEMP=68 PRES=1 <ATM> MASS-FLOW=1.20
    MASS-FLOW H2 2.42
    SUBSTREAM CISOLID TEMP=68 PRES=1 <ATM> MASS-FLOW=147.80
    MASS-FLOW C-S 14.44 / FE-S 282.02 / SIO2-S 0.035 /  &
        AL2O3-S 0.035 / BA-S 0.87 / CD-S 0.18

STREAM FDWASTEN
    SUBSTREAM MIXED TEMP=68 PRES=1 <ATM>
    MASS-FLOW H2 0.54 / O2 1.44 / N2 0.01 / CL2 14.88 /  &
        NO 0.66 / SO2 0.83 / H2O 354.23 / HG 0.15
    SUBSTREAM CISOLID TEMP=68 PRES=1 <ATM>
    MASS-FLOW C-S 4.77 / S-S 0.62 / SIO2-S 476.77 /  &
        AL2O3-S 476.77 / AS-S 0.06 / BA-S 0.04 / CD-S 2.63  &
        / CR-S 4.95 / PB-S 0.17 / SE-S 0.03 / AG-S 0.03

STREAM FDWC-ORG
    SUBSTREAM MIXED TEMP=68 PRES=1 <ATM>
    MASS-FLOW H2 47.21 / O2 91.70 / N2 0.23 / CL2 35.12 /  &
        F2 0.11 / H2O 19.24
    SUBSTREAM CISOLID TEMP=68 PRES=1 <ATM>
    MASS-FLOW C-S 299.15 / S-S 0.39 / FE-S 7.67 / SIO2-S  &
        52.91 / AL2O3-S 52.91 / BA-S 0.77 / CD-S 0.77 / CR-S 1.53

STREAM FDWOLIQS
    SUBSTREAM MIXED TEMP=68 PRES=1 <ATM>
    MASS-FLOW H2 3.74 / O2 1.06 / CL2 17.90 / H2O 0.59
    SUBSTREAM CISOLID TEMP=68 PRES=1 <ATM>
    MASS-FLOW C-S 27.13 / S-S 0.10 / SIO2-S 0.10 / AL2O3-S 0.10

STREAM FUELMIX1
    SUBSTREAM MIXED TEMP=68 PRES=1 <ATM>
    MASS-FLOW O2 .222 / N2 .732 / CH4 .046

STREAM NAOH
    SUBSTREAM CISOLID TEMP=68 PRES=1 <ATM> MASS-FLOW=31
    MASS-FLOW NAOH-S 1

STREAM OXYGEN
    SUBSTREAM MIXED TEMP=68 PRES=1 <ATM> MASS-FLOW=352
    MASS-FLOW O2 1

STREAM WATER
    SUBSTREAM MIXED TEMP=68 PRES=1 <ATM> MASS-FLOW=2842
    MASS-FLOW H2O 1
```

```
BLOCK COND-SEP SEP
    FRAC STREAM=VAPORS SUBSTREAM=MIXED COMPS=H2 O2 N2 CL2  &
        F2 NO SO2 H2O CO2 CO HCL CH4 C-S S-S S NAOH-S  &
        NACL-S NAF-S AS CD HG SE FE SIO2 AL2O3 FE-S SIO2-S  &
        AL2O3-S AS-S BA-S CD-S CR-S PB-S SE-S AG-S CACO3-S  &
        MGO-S NA2O-S K2O-S FE3O4 FE3O4-S CAO-S FRACS=.1 .1  &
        .1 .1 .1 .1 .1 .1 .1 .1 .1 .1 .1 .1 .1 .1 .1  &
        .1 0 0 0 0 0 0 0 0 0 0 0 0 0 0 0 0 0 0 0 0 0 0 0
    FRAC STREAM=VAPORS SUBSTREAM=CISOLID COMPS=C-S S-S NAOH-S  &
        NACL-S NAF-S FE-S SIO2-S AL2O3-S AS-S BA-S CD-S CR-S  &
        PB-S SE-S AG-S CACO3-S MGO-S NA2O-S K2O-S FE3O4-S  &
        CAO-S FRACS=.1 .1 .1 .1 .1 0 0 0 0 0 0 0 0 0  &
        0 0 0 0 0 0 0
    FRAC STREAM=HGPLUS SUBSTREAM=MIXED COMPS=H2 O2 N2 CL2  &
        F2 NO SO2 H2O CO2 CO HCL CH4 C-S S-S S NAOH-S  &
        NACL-S NAF-S AS CD HG SE FE SIO2 AL2O3 FE-S SIO2-S  &
        AL2O3-S AS-S BA-S CD-S CR-S PB-S SE-S AG-S CACO3-S  &
        MGO-S NA2O-S K2O-S FE3O4 FE3O4-S CAO-S FRACS=0 0 0  &
        0 0 0 0 0 0 0 0 0 0 0 0 0 0 0 1 1 1 1 0 0  &
        0 0 0 0 1 0 1 0 0 1 0 0 0 0 0 0 0 0
    FRAC STREAM=HGPLUS SUBSTREAM=CISOLID COMPS=C-S S-S NAOH-S  &
        NACL-S NAF-S FE-S SIO2-S AL2O3-S AS-S BA-S CD-S CR-S  &
        PB-S SE-S AG-S CACO3-S MGO-S NA2O-S K2O-S FE3O4-S  &
        CAO-S FRACS=0 0 0 0 0 0 0 0 1 0 1 0 0 1 0 0  &
        0 0 0 0 0

BLOCK SCWO-SEP SEP
    FRAC STREAM=SALTSOLN SUBSTREAM=MIXED COMPS=H2 O2 N2 CL2  &
        F2 NO SO2 H2O CO2 CO HCL CH4 C-S S-S S NAOH-S  &
        NACL-S NAF-S AS CD HG SE FE SIO2 AL2O3 FE-S SIO2-S  &
        AL2O3-S AS-S BA-S CD-S CR-S PB-S SE-S AG-S CACO3-S  &
        MGO-S NA2O-S K2O-S FE3O4 FE3O4-S CAO-S FRACS=0 0 0  &
        0 0 0 0 0.999 0 0 0 0 0 0 0 1 1 1 0 0 0 0  &
        0 0 0 0 0 0 0 0 0 0 0 0 0 0 0 0 0 0 0 0
    FRAC STREAM=SALTSOLN SUBSTREAM=CISOLID COMPS=C-S S-S  &
        NAOH-S NACL-S NAF-S FE-S SIO2-S AL2O3-S AS-S BA-S  &
        CD-S CR-S PB-S SE-S AG-S CACO3-S MGO-S NA2O-S K2O-S  &
        FE3O4-S CAO-S FRACS=0 0 1 1 1 0 0 0 0 0 0 0 0  &
        0 0 0 0 0 0 0 0
    FRAC STREAM=RECYCLE SUBSTREAM=MIXED COMPS=H2 O2 N2 CL2  &
        F2 NO SO2 H2O CO2 CO HCL CH4 C-S S-S S NAOH-S  &
        NACL-S NAF-S AS CD HG SE FE SIO2 AL2O3 FE-S SIO2-S  &
        AL2O3-S AS-S BA-S CD-S CR-S PB-S SE-S AG-S CACO3-S  &
        MGO-S NA2O-S K2O-S FE3O4 FE3O4-S CAO-S FRACS=0 0 0  &
        0 0 0 0 0.001 0 0 0 0 0 0 0 0 0 0 0 0 0 0  &
        0 0 0 0 0 0 0 0 0 0 0 0 0 0 0 0 0 0 0 0
    FRAC STREAM=RECYCLE SUBSTREAM=CISOLID COMPS=C-S S-S  &
        NAOH-S NACL-S NAF-S FE-S SIO2-S AL2O3-S AS-S BA-S  &
        CD-S CR-S PB-S SE-S AG-S CACO3-S MGO-S NA2O-S K2O-S  &
        FE3O4-S CAO-S FRACS=0 0 0 0 0 0 0 0 0 0 0 0 0  &
        0 0 0 0 0 0 0 0

BLOCK SEPRATR SEP
    FRAC STREAM=SOLIDS SUBSTREAM=MIXED COMPS=H2 O2 N2 CL2  &
        F2 NO SO2 H2O CO2 CO HCL CH4 C-S S-S S NAOH-S  &
        NACL-S NAF-S AS CD HG SE FE SIO2 AL2O3 FE-S SIO2-S  &
        AL2O3-S AS-S BA-S CD-S CR-S PB-S SE-S AG-S CACO3-S  &
        MGO-S NA2O-S K2O-S FE3O4 FE3O4-S CAO-S FRACS=.8 .8  &
        .8 .8 .8 .8 .8 0.2 .8 .8 .8 .8 .8 1 1 1 1 1 0  &
        0 0 0 1 1 1 1 1 1 1 1 1 1 1 1 1 1 1 1 1 1 1  &
        1 1
```

```
    FRAC STREAM=SOLIDS SUBSTREAM=CISOLID COMPS=C-S S-S NAOH-S  &
        NACL-S NAF-S FE-S SIO2-S AL2O3-S AS-S BA-S CD-S CR-S  &
        PB-S SE-S AG-S CACO3-S MGO-S NA2O-S K2O-S FE3O4-S  &
        CAO-S FRACS=.8 1 1 1 1 1 1 1 1 1 1 1 1 1 1 1 1 1 1 1 1

BLOCK CONDENS2 FLASH2
    PARAM TEMP=100 PRES=1 <ATM>

BLOCK EVAPOR8R FLASH2
    PARAM PRES=1 <ATM> VFRAC=0.5 MAXIT=500
    PROPERTIES SOLIDS

BLOCK FLASH FLASH2
    PARAM TEMP=150 PRES=1 <ATM>
    PROPERTIES SOLIDS

BLOCK CATALYST RSTOIC
    PARAM TEMP=1500 PRES=1 <ATM>
    STOIC 1 MIXED CO -1 / O2 -0.5 / CO2 1
    STOIC 2 MIXED CH4 -1 / O2 -2 / H2O 2 / CO2 1
    STOIC 3 MIXED H2 -1 / O2 -0.5 / H2O 1
    STOIC 4 MIXED O2 -1 / CISOLID C-S -1 / MIXED CO2 1
    CONV 1 MIXED CO 1
    CONV 2 MIXED CH4 1
    CONV 3 MIXED H2 1
    CONV 4 CISOLID C-S 1

BLOCK CONDENSR RGIBBS
    PARAM TEMP=80 PRES=1 <ATM> NPHASE=2 CHEMEQ=YES MAXIT=100
    PROD H2 / O2 / N2 / CL2 / F2 / NO / SO2 / H2O /  &
        C-S SS / S-S SS / S / AS / CD / HG / FE-S SS  &
        / SIO2-S SS / AL2O3-S SS / AS-S SS / BA-S SS /  &
        CD-S SS / CR-S SS / PB-S SS / SE-S SS / AG-S SS
    PROD-FRAC H2 1 / O2 1 / H2O 1

BLOCK DESORBER RGIBBS
    PARAM TEMP=600 PRES=1 <ATM> NPHASE=2 CHEMEQ=YES MAXIT=200
    PROD H2 / O2 / N2 / CL2 / F2 / NO / SO2 / H2O /  &
        C-S SS / S-S SS / S / AS / CD / HG / SE /  &
        FE-S SS / SIO2-S SS / AL2O3-S SS / AS-S SS /  &
        BA-S SS / CD-S SS / CR-S SS / PB-S SS / SE-S SS / AG-S SS
    PROD-FRAC H2 1 / O2 1 / H2O 1

BLOCK HEATER RGIBBS
    PARAM TEMP=1400 PRES=1 <ATM> NPHASE=2

BLOCK MELTER RGIBBS
    PARAM TEMP=3000 PRES=1 <ATM> NPHASE=3 VAPOR=YES
    PROD H2 / C-S SS / FE / SIO2 / AL2O3 / FE-S SS /  &
        SIO2-S SS / AL2O3-S SS / BA-S SS / CD / CD-S SS

BLOCK SCWO RGIBBS
    PARAM TEMP=800 PRES=3200 NPHASE=2 MAXIT=100
    PROD H2 M / O2 M / N2 M / CL2 / F2 / NO / SO2 /  &
        H2O / CO2 / CO / HCL / NAOH-S SS / NACL-S SS /  &
        NAF-S SS / SIO2-S SS / AL2O3-S SS
    PROPERTIES PENG-ROB

BLOCK PUMP PUMP
    PARAM PRES=3200 NPHASE=2 MAXIT=200
    PROPERTIES PENG-ROB
```

```
BLOCK 5-STAGEC MCOMPR
    PARAM NSTAGE=5 TYPE=ISENTROPIC PRES=3200 COMPR-NPHASE=2  &
        MAXIT=200
    FEEDS OXYGEN 1
    PRODUCTS COMPRESS 5
    COOLER-SPECS 1 TEMP=80
    PROPERTIES PENG-ROB

DESIGN-SPEC AIR
    DEFINE OXIN1 MASS-FLOW STREAM=AIR SUBSTREAM=MIXED  &
        COMPONENT=O2
    DEFINE OXIN2 MASS-FLOW STREAM=VAPORS SUBSTREAM=MIXED  &
        COMPONENT=O2
    DEFINE OXOUT MASS-FLOW STREAM=EXHAUST2 SUBSTREAM=MIXED  &
        COMPONENT=O2
    SPEC "OXIN1+OXIN2-2.*OXOUT" TO "0"
    TOL-SPEC "0.01"
    VARY STREAM-VAR STREAM=AIR SUBSTREAM=MIXED  &
        VARIABLE=MASS-FLOW
    LIMITS "1" "10000"

DESIGN-SPEC LIQUOR
    DEFINE H2O MASS-FLOW STREAM=CONCSOLN SUBSTREAM=MIXED  &
        COMPONENT=H2O
    DEFINE SALTS STREAM-VAR STREAM=CONCSOLN SUBSTREAM=CISOLID  &
        VARIABLE=MASS-FLOW
    SPEC "H2O-SALTS" TO "0"
    TOL-SPEC "0.01"
    VARY BLOCK-VAR BLOCK=EVAPOR8R VARIABLE=VFRAC SENTENCE=PARAM
    LIMITS "0 " "1  "

DESIGN-SPEC NAOH
    DEFINE CAUIN MASS-FLOW STREAM=NAOH SUBSTREAM=CISOLID  &
        COMPONENT=NAOH-S
    DEFINE CAUOUT MASS-FLOW STREAM=SCWOPROD SUBSTREAM=CISOLID  &
        COMPONENT=NAOH-S
    SPEC "CAUIN" TO "CAUOUT*50."
    TOL-SPEC "0.01"
    VARY STREAM-VAR STREAM=NAOH SUBSTREAM=CISOLID  &
        VARIABLE=MASS-FLOW
    LIMITS "29" "100"

DESIGN-SPEC OXYGEN
    DEFINE OXIN1 MASS-FLOW STREAM=COMPRESS SUBSTREAM=MIXED  &
        COMPONENT=O2
    DEFINE OXIN2 MASS-FLOW STREAM=LIQUID SUBSTREAM=MIXED  &
        COMPONENT=O2
    DEFINE OXOUT MASS-FLOW STREAM=SCWOPROD SUBSTREAM=MIXED  &
        COMPONENT=O2
    SPEC "OXIN1+OXIN2" TO "6.0*OXOUT"
    TOL-SPEC "0.01"
    VARY STREAM-VAR STREAM=OXYGEN SUBSTREAM=MIXED  &
        VARIABLE=MASS-FLOW
    LIMITS "1" "1000"

DESIGN-SPEC QHEATER
    DEFINE QIN BLOCK-VAR BLOCK=DESORBER VARIABLE=QCALC  &
        SENTENCE=PARAM
    DEFINE QOUT BLOCK-VAR BLOCK=HEATER VARIABLE=QCALC  &
        SENTENCE=PARAM
    SPEC "1.05*QIN+QOUT" TO "0"
    TOL-SPEC "1."
```

```
    VARY STREAM-VAR STREAM=FUELMIX1 SUBSTREAM=MIXED  &
        VARIABLE=MASS-FLOW
    LIMITS "1" "10000"

DESIGN-SPEC QSCWO
    DEFINE QSCWO BLOCK-VAR BLOCK=SCWO VARIABLE=QCALC  &
        SENTENCE=PARAM
    SPEC "QSCWO" TO "0"
    TOL-SPEC "1."
    VARY STREAM-VAR STREAM=WATER SUBSTREAM=MIXED  &
        VARIABLE=MASS-FLOW
    LIMITS "1000" "10000"

DESIGN-SPEC SALT
    DEFINE NACL MASS-FLOW STREAM=SALTSOLN SUBSTREAM=CISOLID  &
        COMPONENT=NACL-S
    DEFINE NAF MASS-FLOW STREAM=SALTSOLN SUBSTREAM=CISOLID  &
        COMPONENT=NAF-S
    DEFINE WATER MASS-FLOW STREAM=SALTSOLN SUBSTREAM=MIXED  &
        COMPONENT=H2O
    SPEC "5.67*(NACL+NAF)" TO "WATER"
    TOL-SPEC "0.05"
    VARY BLOCK-VAR BLOCK=SCWO-SEP SENTENCE=FRAC VARIABLE=FRACS  &
        ID1=MIXED ID2=SALTSOLN ELEMENT=8
    LIMITS "0.01" "1."

CONV-OPTIONS
    PARAM CHECKSEQ=NO
    SECANT MAXIT=500 MAX-STEP-SIZ=.05 BRACKET=YES

CONVERGENCE CV1 WEGSTEIN
    TEAR RECYCLE

CONVERGENCE CV2 SECANT
    SPEC AIR

CONVERGENCE CV7 SECANT
    SPEC SALT

STREAM-REPOR NOSORT MOLEFLOW MASSFLOW PROPERTIES=ALL-SUBS
```

Appendix C

ASPEN PLUS Stream Summaries

System A-1