This document was too large to scan as a whole document, therefore it required breaking into smaller sections.

Document number: SD-SNF-DR-003

Section 1 **of** 3

Title: Multi-Canister Overpack Design Report

Date: 6/9/97 **Revision:** A000

Originator: Smith KE
Co: WESH

Recipient:
Co:

References: EDT-620106

for 4. (2)

JUN 09 1997 **ENGINEERING DATA TRANSMITTAL**

Page 1 of 1

1. EDT 620106

2. To: (Receiving Organization)	3. From: (Originating Organization)	4. Related EDT No.:
Distribution	SNF Storage Projects	N/A
5. Proj./Prog./Dept./Div.:	6. Design Authority/ Design Agent/Cog. Engr.:	7. Purchase Order No.:
SNF Project/W-442	L. H. Goldmann	E56158
8. Originator Remarks: The attached document is being submitted for release. Strikeouts to dually numbered pages made in order to facilitate release process. KES 5/25/97		9. Equip./Component No.: N/A
		10. System/Bldg./Facility: K Basins/212H
11. Receiver Remarks: 11A. Design Baseline Document? [X] Yes [ ] No		12. Major Assm. Dwg. No.: N/A
		13. Permit/Permit Application No.: N/A
		14. Required Response Date: N/A

15. DATA TRANSMITTED

(A) Item No.	(B) Document/Drawing No.	(C) Sheet No.	(D) Rev. No.	(E) Title or Description of Data Transmitted	(F) Approval Designator	(G) Reason for Transmittal	(H) Originator Disposition	(I) Receiver Disposition
1	HNF-SD-SNF-DR-003	All	0	Multi-Canister Overpack Design Report	N/A	1,2	1	

16. KEY

Approval Designator (F)	Reason for Transmittal (G)	Disposition (H) & (I)
E, S, Q, D or N/A (see WHC-CM-3-5, Sec.12.7)	1. Approval 2. Release 3. Information 4. Review 5. Post-Review 6. Dist. (Receipt Acknow. Required)	1. Approved 2. Approved w/comment 3. Disapproved w/comment 4. Reviewed no/comment 5. Reviewed w/comment 6. Receipt acknowledged

17. SIGNATURE/DISTRIBUTION
(See Approval Designator for required signatures)

(G) Reason	(H) Disp.	(J) Name	(K) Signature	(L) Date	(M) MSIN	(G) Reason	(H) Disp.	(J) Name	(K) Signature	(L) Date	(M) MSIN
1	1	Design Authority L. H. Goldmann	LHGoldmann	4/25/97	R3-86						
		Design Agent									
		Cog.Eng.									
1	1	Cog. Mgr. K. E. Smith	KE Smith	4/25/97	R3-86						
1	1	SNF Storage Projects Mgr. R. W. Rasmussen	[illegible]	4/25/97	R3-86						
		Safety									
		Env.									

18.	19.	20.	21. DOE APPROVAL (if required) Ctrl. No.
LHGoldmann L. H. Goldmann 4/25/97		KE Smith K. E. Smith 4/25/97	[ ] Approved [ ] Approved w/comments [ ] Disapproved w/comments
Signature of EDT Originator / Date	Authorized Representative for Receiving Organization / Date	Design Authority/ Cognizant Manager / Date	

BD-7400-172-2 (05/96) GEF097

BD-7400-172-1

Multi-Canister Overpack Design Report

K.E. Smith
DESH, Richland, WA 99352
U.S. Department of Energy Contract DE-AC06-96RL13200

EDT/ECN: EDT-620106 UC: 600
Org Code: 2T340 Charge Code: LE008
B&R Code: EW7040000 Total Pages: 960

Key Words: Spent Fuel, Canister, Packaging, Container

Abstract: This design report documents the final design for the Multi-Canister Overpack.

TRADEMARK DISCLAIMER. Reference herein to any specific commercial product, process, or service by trade name, trademark, manufacturer, or otherwise, does not necessarily constitute or imply its endorsement, recommendation, or favoring by the United States Government or any agency thereof or its contractors or subcontractors.

Printed in the United States of America. To obtain copies of this document, contact: Document Control Services, P.O. Box 950, Mailstop H6-08, Richland WA 99352, Phone (509) 372-2420; Fax (509) 376-4989.

Release Approval 6/9/97 Date

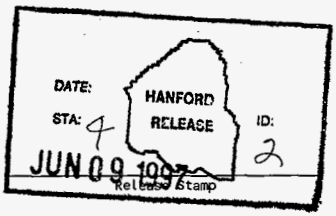

Approved for Public Release

Industrial Screen Products, Inc.
P.O. Box 10673 • Zephyr Cove, NV 89448
Phone: (800) 663-2702 • Fax: (800) 663-8060

Date: Wednesday, April 23, 1997

To: Duke Engineering & Services Hanford, Inc.

Attn: Lars Meyer

Fax: 509-376-3252

Sub: Authorization

Duke Engineering is authorized to publish ISP drawing # 5873 in the MCO Final Design Report.

Best regards,

Thomas A Anderson

2770 THE BOULEVARD
P.O. BOX 9889
COLUMBIA, SC 29209 USA
TELEPHONE: (803) 783-1880
TELEFAX: (803) 783-4279

TELEFAX

From: Michel LEFRANÇOIS
Sales & Marketing Manager

To: Lars MEYER
Company: DUKE ENGINEERING
Address: HANDFORD
Country/State: WA

Copy :

Telefax #: 509 376 3252

Columbia, April 24, 1997

Subject: DRAWING DUPLICATION
Ref.: MCO Cask Seal / Holding device for Helicoflex Seal H-305236 Rev NC / Re ML-2/14/97

Dear Sir,

Re our telephone conversation of 4/22/97, we hereby allow you to duplicate the sketch referenced above.

Yours Sincerely,

Michel Lefrançois

EG+G PRESSURE SCIENCE GRANTS DUKE ENGINEERING SERVICES HANFORD AND PARSONS PERMISSION TO USE PART DRAWING NUMBERS 13503, 13632 AND 13634 IN ANY REPORTS OR PUBLICATIONS NECESSARY.

JEFF LAYER
ENGINEERING MGR. SEALS
EG+G PRESSURE SCIENCE
11642 OLD BALTIMORE PIKE
BELTSVILLE MD. 21797

SIGNED: JEFF LAYER

MULTI-CANISTER OVERPACK DESIGN REPORT

Prepared for Duke Engineering & Services, Hanford, Inc.

Contract No. KH-8009-8

Document No. HNF-SD-SNF-DR-003, Revision 0

April 1997

Prepared by: Parsons Infrastructure & Technology Group, Inc.

1.0 INTRODUCTION 1
2.0 DESCRIPTION OF SYSTEM 2
2.1 General 2
2.2 Interfaces 2
2.3 MCO Shell 3
2.4 Cover Cap 3
2.5 Shield Plug 3
2.6 Shield Plug Ports 4
2.7 Seal 6
2.8 Locking Ring 7
2.9 Mark 1A Storage Basket 7
2.10 Mark 1A Scrap Basket 8
2.11 Mark IV Storage Basket 8
2.12 Mark IV Scrap Basket 9
2.13 Basket Supports 9
3.0 REQUIREMENTS 10
3.1 Design Life 10
3.2 SNF Confinement 10
3.3 SNF Containment 11
3.4 Maintainability 11
3.5 Human Factors 12
3.6 Interchangeability 12
3.7 Environmental Conditions 12
3.8 Transportability 13
3.9 MCO Design Overview 15
3.9.1 Code Requirements 15
3.9.2 MCO Design Criteria 18
3.9.3 Maximum MCO Assembly Weight 19
3.9.4 Height of the MCO 19
3.9.5 Diameter of the MCO 20
3.10 MCO Shell Design 22
3.11 MCO Closure Design 22
3.12 Fuel Basket Design 23
3.12.1 Mark IV Baskets 24
3.12.2 Mark IA and Mark IV Baskets 24
3.12.3 Summary of MCO Fuel Basket Types 25
3.12.4 Summary of MCO Fuel Basket Functions 26
3.13 MCO Shield Plug Design 28
3.14 Internal Process Filter 34
3.15 Materials, Processes, and Parts 36
3.16 MCO Corrosion Control 36

3.17 Welded Joints 37
3.18 Decontamination Provisions 37
3.19 Safety Requirements 37
3.19.1 Safety Classification 37
3.19.2 Design Basis Accidents 38
3.19.3 Nuclear Criticality Safety 42
3.19.4 Over Pressure Relief 42
3.20 Quality Assurance Requirements 44
4.0 COMPLIANCE MATRIX 46
5.0 SUMMARY OF COMPLIANCE WITH REQUIREMENTS 53
6.0 REFERENCES 54
APPENDICES 55

1.0 INTRODUCTION

The Multi-Canister Overpack (MCO) is a storage/process vessel which will be used to stabilize and store the spent fuel currently stored in the Hanford K Basins. The spent fuel will be placed in one of four fuel basket designs which will be stacked inside the MCO. The fuel stabilization process will include 1) fuel basket stacking within the MCO, 2) transporting of the fuel inside the MCO to an initial processing facility, 3) cold vacuum drying of the fuel within the MCO, 4) transporting of the MCO/fuel to the Canister Storage Building (CSB) where the MCOs will be placed inside storage tubes while awaiting final processing, 5) transporting of the MCO/fuel to a hot vacuum drying facility for final processing, 6) transporting of the MCO/fuel back to the CSB for storage for a period of up to 75 years.

This design report is limited to the features and functions of the MCO and fuel handling/storage baskets relative to the requirements set forth in the Performance Specification for the Spent Nuclear Fuel Multi-Canister Overpack (HNF-S-0426) Rev 3. The design is a modified version of the preliminary design supplied with the Performance Specification. Per the Statement of Work, no changes were made to the preliminary design developed by Duke Engineering Services Hanford, Inc., that were not required to either meet the specification requirements or changes requested by the buyer in the form of a revised Performance Specification.

The Performance Specification limits the evaluation to shielding, structural, and some functional considerations. Criticality, thermal/fluid and interface considerations were not part of the evaluation; however, features were included in the design to accommodate evaluations performed by the buyer and indicated in the Performance Specification. Components such as the relief valve, the filters, as well as lifting interfaces, are the responsibility of the buyer.

As specified in the Performance Specification, the MCO is designed to the "intent" of Section III of the ASME Boiler and Pressure Vessel Code. The welded pressure boundary is designed to Subsection NB of the ASME code with a few exceptions. The outer vessel is not required to meet the code for all accident cases, specifically when it is in the transfer cask. The final closure weld attaching the cover cap is not a full Code weld since it cannot be subjected to a full volumetric inspection. Likewise, a number of other features including the Mark IV baskets are exempt from the code per specification. The exceptions are applied to components that are not required for criticality or containment safety. Where geometry control is required for criticality safety per the Performance Specification, Section III, subsection NG design requirements of the code are applied. In actuality, the need to maintain geometry control requires more restrictive criteria that is met, than that imposed by subsection NG.

2.0 DESCRIPTION OF SYSTEM

2.1 General

The MCO is designed to facilitate the removal, processing and storage of the spent nuclear fuel currently stored in the K-Basins, East and West. The stainless steel canister is approximately 24 inches in diameter and 160-inches long. The shell is fabricated from ½ inch 304L material. The bottom closure is a forging which is welded to the shell. The top closure consists of a shield plug with four processing ports and a locking ring with jacking bolts to preload the metal seal under the shield plug.

The fuel is placed in one of four types of baskets in the fuel pool . Each basket is then loaded into the MCO which is inside the transfer cask. Once all of the baskets are loaded in the MCO, a shield plug with process tube is placed in the end of the MCO. This shield plug provides shielding for the workers when the transfer cask containing the MCO is lifted from the pool and dewatered. After being removed from the pool, the locking ring is installed and the jacking bolts are tightened to preload the metal main closure seal. The MCO is dewatered and vacuumed dried through the process ports. Covers for the process ports may be installed or removed as needed per operating procedures. The MCO is to be transferred to the Canister Storage Building (CSB), in the closed cask. The MCO is then transferred to a storage tube where it is stacked two per storage tube.

At a later time, the MCOs are taken out of the storage tube. Using the process ports on the shield plug, the MCO undergoes Hot Conditioning as a final stabilization of the fuel. At the completion of the fuel stabilization, the cover cap may be placed on the MCO. A temporary lifting device consisting of a threaded pipe or bar with a lifting eye is threaded in to the center opening above the rupture disk for handling purposes. The cover cap is welded to the shell providing a complete welded closure. The MCO is then placed back into the storage tubes for storage.

Details of all the MCO components including baskets can be found on the drawings in Appendix 1.

2.2 Interfaces

The MCO as described above must interface with many exterior components and environments. These include:

A. Transfer Cask
B. Mark 1A Storage Basket
C. Mark 1A Scrap Basket
D. Mark IV Storage Basket
E. Mark IV Scrap Basket

F. Fuel Basket Lifting Grapple
G. Cold Vacuum Drying System
H. Remote operators for Process Ports/valves
I. Remote operators for Process Port covers
J. Jacking bolts tightening equipment
K. Transfer equipment at CSB
L. CSB storage tubes
M. Hot processing equipment
N. Closure Cap installation equipment

The design insures proper interface with the above components by compliance with the Performance Specification and the interface drawing provided by the Buyer (SK-1-80096).

2.3 MCO Shell

The MCO shell provides both confinement and containment of the fuel both during handling and storage. It also provides support for the shield plug and the baskets for stacking, lifting and handling including the expected drops. The shell is constructed out of 304L stainless steel. The main section of the shell is fabricated from SA-312 304L 80s pipe. The bottom of the shell is a SA-182 304L machined forging. The top of the shell is another SA-182 304L or 304LN forging that is machined with a double lead buttress thread and a seal surface for the shield plug to rest on to complete the containment boundary. The nominal wall thickness of the shell is 0.5 in.

2.4 Cover Cap

The cover cap is a SA-182 304L forging in the shape of a dome that is placed on top of the MCO after the completion of hot conditioning. The purpose of the cover cap is to provide for a welded closure that can meet the leaktightness criteria for containment. The closure weld is a full penetration weld just below the top of the locking ring on the collar of the MCO shell. This weld is a field weld that cannot be volumetrically inspected due to the configuration and contents of the MCO. The exterior of the closure cap is forged and machined to have the same lifting ring configuration as the locking ring so that the containers can be handled after installation of the cover cap.

2.5 Shield Plug

The shield plug is a multi functional component of the MCO. It provides a mechanical confinement and containment boundary until the cover cap is welded in place. It also provides for axial shielding to allow personnel access to the top of the MCO for closing the package as well as performing the drying and processing functions. The shield plug also retains the main seal which seals between the

MCO collar and the shield plug. The shield plug has four ports which connect to four penetrations. The first penetration connects to an internal HEPA filter bank that allows for filtered release of gases from the MCO, either through a pressure relief device, or through one of the process ports during vacuum drying or hot processing. The filter bank is protected by a guard plate which will insure that the filters are not crushed during the postulated accident events. The guard plate assembly also protects a short process tube that serves as backup process port as well as a pressure relief port. The guard plate assembly traps air when the shield plug is lowered into the pool and keeps the filter bank dry. The other penetration connects to the long process tube which reaches to the bottom of the MCO aiding in the removal of water during the dewatering and drying process.

The shield plug and guard plate assembly also mates with the fuel baskets to provide top stability. The coupling of the fuel baskets to the shield plug assembly prevents potential migration of fuel rubble inside the center exclusion cavity, which is required for criticality safety. The machined ports in the shield plug act as valve bodies for the process ports and the relief devices. Each of these ports can also be covered with cover plates that have either orifices in them to control the pressure relief flow rate or are blank to allow sealing of the MCO as needed. All of the shield plug port covers are the same, except for the one that connects to the center long process tube. The process tube cover plate has five bolts versus the four bolt pattern for the other ports. This insures proper connections during processing.

2.6 Shield Plug Ports

The four shield plug ports, as described above, serve different and unique functions for the handling, processing and safety in the storing of the fuel. One port has the capability of receiving several different types of pressure relief devices. The other three ports have a unique process plug in them. This process plug is a hollow cross-drilled threaded plug that seals when fully engaged and allows flow when the plug is turned out, until the cross drilled holes are exposed and the seal is disengaged. The seal is a special metal seal that has the capability of resealing over five times when the plug is torqued into place. One of the plugs connects to a short process tube which has a rupture disk built into it. This allows the one port to serve as a backup process port as well as the primary over pressure protection port. The rupture disk is designed to fail at the design pressure of the MCO which is 150 psig at 200°C and withstand a minimum of 75 psig at 375°C.

Port number 1 uses a passageway one quarter of an inch in diameter or larger leading to the internal HEPA filter bank. This port is a multi-purpose port and serves the following needs:

1. This port serves as the process pressure relief of the MCO during the period of time when the MCO is producing gases internally. This relief path allows the excess gasses to leave the MCO at a pressure which is above surrounding atmospheric pressure but is still well below the safety class pressure relief rupture disk setting for the MCO. This port has a Process

Pressure Relief Valve (PPRV) installed at the port. This valve will reseat once the MCO internal pressure has bled down to the reset pressure for the PPRV. This mode of operation for the MCO would be likely during staging at the Canister Storage Building (CSB). This mode of operation allows the MCO to transfer internal pressure to the surrounding atmosphere effectively in one direction only, i.e. out of the MCO.

2. This port may also serve as a receptacle for a process rupture disk to relieve pressure from the inside of the MCO. After HCS, a rupture disk is installed in this port to relieve the pressure. Once actuated this rupture disk allows the MCO to transfer in both directions with its surrounding atmosphere. The relief setting for this process rupture disk would be at a pressure well below the actuation setting for the safety class rupture disk.

3. As a possible option, this port also serves as a receptacle for an external HEPA filter holder. This port, when configured with a external HEPA, allows the MCO to be staged or stored at roughly Canister Storage Building (CSB) storage tube pressure. Using this option allows the MCO to communicate both ways with the surrounding atmosphere in the tube.

The application of a restrictive orifice cover over the process pressure relief, to limit the flow out of the MCO, to the equivalent of a 1/4 inch orifice, is possible, if needed, with the implementation of this scenario. The orifice plate, if needed, is planned to be used during staging and after HCS is complete. Prevention of disk pieces and debris from getting into the orifice is considered in the design. It is also possible for the installed appliance to also serve as the restrictive orifice. Thus a cover, installed for orifice reasons, may not be needed in this case.

Path configuration of Port Number 1

The PPRV may be installed in the shield plug port at the factory or poolside at the basins before the shield plug is inserted into the fueled MCO in the load out pool water. The PPRV stays installed through staging phase at the CSB. If the PPRV adequately limits the flow for the needs of the processes, CVD, and CSB, then the PPRV will need a cover only for the physical protection of the shield plug installed PPRV appliance when the MCO is in the cask and when there is a danger of a heavy fixtures such as the cask lifting fixture being dropped on the appliance in the shield plug port. This cover would likely have a large hole to allow venting that would not limit gas flow release rates but still physically protect the appliance. This cover is the same as the orifice cover, but with a larger hole in the plate so there is no appreciable gas flow restriction.

The MCO may have a rupture disk, plug, or external HEPA filter installed in this port at any time as directed by operating procedures. The multi-functions of Port 1 is accomplished by making a threaded connection that will receive either a ¾ NPS threaded HEPA filter, plug, rupture disk or a bushing that will allow adaptation to a ⅛ inch relief valve. The seals used are the similar to those

on the process ports. This seal is readily adaptable to straight pipe thread, captured for remote installation and replaceable without damage to the seal surface. The seal to the relief valve may not need as high a quality seal since using standard tapered pipe threads probably will give the same leakage rate as the relief valve. In accordance with the specification, Port 1 connects up to a one-inch in penetration leading to the internal HEPA filter bank.

Port 2 is a process plug, as described above, that connects with a one-inch penetration to the filter bank.

Port 3 connects with a 0.54-inch (minimum diameter) to the center long process tube. It has a process plug. The flange cover, as indicated earlier, has a five bolt cover flange and sealing surface that can mate to the operator tool.

Port 4 connects to the short process tube through a one-inch diameter connection. The process plug it contains differs from the others by having a one-inch ASME certified rupture disk built into the upper portion instead of being solid. The rupture disk is replaceable by replacing the process plug. The cover flange has a four hole pattern that can contain either a solid flange for sealing or a flange with a ¼ inch orifice in it. All the cover plates have capture bolts which allow for remote removal and installation of the covers. The cover plates use a metal C-seal that requires a relatively low sealing pressure and has the capability to "snap" on to the cover plates by being slightly eccentric to facilitate remote handling. The rupture disk is sandwiched between the top of the plug (the actuator and discharge vents)and the bottom of the plug. These two parts are welded together in such a manner that the rupture disk is also welded to the bottom of the plug (see Appendix 1). This pressure boundary weld can not be fully volumetrically inspected and hence is an exception to Subsection NB, requirements Reference [2]. The weld has a large margin of safety as shown in Appendix 10.

The metal seal that is used for the process plugs is an Inconel C-seal plated with gold, produced by EG&G pressure seals. This seal has been demonstrated to reseal over five times. The seal plating allows it to seal at the high temperatures specified (375°C) and still meet the reseal requirements.

2.7 Seal

The primary seal for the MCO seals the MCO shell to the shield plug. It is a Helicoflex seal comprised of a high strength alloy spring covered with a 300 series stainless steel jacket covered by a silver outer jacket. The seal is held in place with five stainless steel clips that are screwed to the shield plug. This seal, when properly preloaded (recommended minimum value of 1700 pounds per inch of seal), will maintain a leak tight condition. The analysis in Appendix 4 uses a preload value of 1850 pounds/inch which was specified originally for the seal and consistent with the published literature (Appendix 13). Recent data from the vendor shows seating loads as low as 1700 pounds

per inch are acceptable, providing for a larger margin of safety. The seal is similar to the standard mechanical seals approved by the NRC for dry fuel storage applications.

2.8 Locking Ring

The preload on the seal is maintained by the use of a locking ring and jacking bolt arrangement. The locking ring is a stainless steel forging that is threaded into the buttress threads on the MCO collar after the MCO is removed from the pool. This ring serves two functions. It provides a grapple interface for handling the MCO and it provides support for the jacking bolts that preload the shield plug and the seal. Eighteen SA-193 B8M 1-½ inch set screws are threaded into the locking ring. The screws serve as jacking bolts to preload the seal and were sized to maintain the appropriate preload throughout the operating temperature range while not allowing any of the joint components to yield. Component yielding, during a thermal transient, could result in unacceptable preload losses. The set screws are to be torqued to 189 ft-lbs with an accuracy of plus or minus 3%. See Appendix 4 for details.

2.9 Mark 1A Storage Basket

The Mark 1A storage basket is designed to hold 48 Mark 1A fuel assemblies, which are basically intact. The fuel assemblies, when fabricated, had the dimensions shown in Table 1. The Mark 1A fuel differs from the Mark IV fuel in that it is shorter and smaller in diameter. The fuel is more reactive which imposes certain criticality control requirements on the Mark 1A basket. The controlling item is the need to maintain the center six-inch pipe within two inches of center for criticality control and to ensure that no fuel particles greater than 2mm can get inside the pipe during all imposed load conditions.

The basket consists of a center six-inch pipe welded to a bottom support plate that also has six support rods at its periphery. The center pipe and six support rods, which are parallel to the center pipe, make up the main structural members of the basket. The basket also has a sheet metal shroud enveloping the six rods and an aluminum spacing plate in the bottom to help position the fuel during handling. The spacer plate has 48 holes to receive the fuel. Between the bottom plate and the spacer plate is a layer of expanded metal to keep the fuel from resting directly on the plate. The expanded metal layer prevents gas flow blockage through the ¼-inch diameter holes in the bottom support plate. Neither the expanded metal nor the spacer plate are connected to the support plate. This is done to minimize the inertia loading to the bottom plate during the side drop accident condition. The six support rods on the periphery of the plate are trapezoidal in shape and the lengths are toleranced so that they share the load with the center tube during axial loading. This is done to ensure that the bottom plate is not deformed significantly and can still support the center pipe in position during a horizontal drop following a vertical drop. All of the structural members of the Mark 1A basket are designed to meet ASME Section III Subsection NG requirements, supplemented by criticality

control deformation limits from the Performance Specification. See Appendix 7 for more details. As can be seen in the Appendix 1 drawings, the top of the center pipe has an end piece that extends up into the next basket above, or into the centering device on the guardplate on the shield plug assembly. This allows the center pipe to be supported at both ends during the side drop loading. Also the end fits snugly into the basket above so that in the worst orientation a 2 mm particle can not enter the center of the pipe. The top of the center pipe interfaces with a lifting grapple. The load path down through the center pipe, through the bottom plate, complies with ANSI N14.6 Reference [5]. The basket is lifted by an internal grove in the end piece of the center pipe. The lifting device is the responsibility of the buyer.

All welded portions of the Mark 1A storage basket is fabricated from 304L austenitic stainless steel. The spring pins used in assembly are made from 302 or 304 stainless steel, and conform to ASME B 18.8.2-1994.

Table 1. Fuel Dimensions

	Mark IV	Mark 1A
Length cm (in) Max	66.3 (26.1)	53.1 (20.91)
Diameter cm (in)	6.15 (2.42)	6.10 (2.40)

2.10 Mark 1A Scrap Basket

The Mark 1A scrap basket is similar in design to the Mark 1A storage basket. All of the structural components are identical. The same requirements for criticality control and ASME Code apply. The major difference is that the shroud extends the full length of the support rods and there is no aluminum positioning plate or expanded metal on the support plate. There are also six dividers that create compartments in the basket cavity. These sheetmetal dividers aid in the loading of the damaged fuel. To ensure adequate gas flow through the basket there are flow deflectors on the exterior of the shroud to force the gas flow through the holes in the bottom plate. The lifting of the basket is by the same means as the storage basket and complies with ANSI N 14.6 Reference [5].

2.11 Mark IV Storage Basket

The Mark IV storage basket is designed to hold up to 54 intact Mark IV fuel assemblies. Unlike the Mark 1A basket the Mark IV basket has no deformation limits for criticality control and hence has no requirements except for self support and meeting the lifting requirements of ANSI N14.6. To meet these requirements only minor modifications of the design supplied by the buyer was required.

The design has a 2.75-inch diameter center tube that is connected to a spacer plate consisting of a plate with 54 holes for the fuel with ⅜ x¼ inch bars to support the fuel at the bottom of the plate. The basket above is supported by the center tube and six 1-¼ inch diameter round bars. The basket also has a 11 inch high non structural shroud to help in handling the fuel. The entire basket is made from 304L stainless steel.

Like the Mark 1A baskets, the Mark IV basket is lifted from a groove on the interior of the center tube. The center tube extends above the support rods and up into the basket above. This coupling aids in the basket stability and facilitates the insertion of the process tube down the center of the basket.

2.12 Mark IV Scrap Basket

The Mark IV scrap basket is designed to handle damaged Mark IV fuel. The scrap basket design includes a 2.75-inch diameter center tube that connects to a ¼ inch thick plate perforated with ¼-inch diameter holes. The basket has a full height shroud connected to six divider plates. The shroud and divider plates provide structural support to the baskets above as well as to the bottom plate. All components are welded together and are fabricated from 304L material. The scrap basket is required to meet the same criteria as that of the storage basket. Like the Mark 1A scrap basket the Mark IV scrap basket has flow deflectors on the exterior of the shroud to direct the processing gas flow through the bottom plate.

2.13 Basket Supports

The baskets are supported by a spider at the bottom of the MCO that keeps the baskets approximately 1.5 inches away from the bottom plate. This plenum, combined with a low point machined in the bottom forging aids in the removal of water by the long process tube and the distribution of process gases during drying and processing. The baskets are centered by a process tube guide cone which is in the center of the spider. The one-inch NPS process tube is inserted down the center of the baskets to remove the water and circulate process gases. The process tube, especially for the Mark IV baskets, provide some centering support for the baskets during non-axial load conditions.

At the top, as part of the shield plug/guardplate assembly, a MCO basket Stabilizer Extension mates with the center tube extensions for both basket designs to provide a locking mechanism to stabilize the baskets during non axial loadings. As with the bottom components the stabilizer is constructed of 304L stainless. The stabilizer is designed to accommodate six Mark 1A baskets or five Mark IV baskets while maintaining a minimum space of one inch nominal and will maintain coupling in the worst tolerance undersize condition.

3.0 REQUIREMENTS

This section establishes the essential requirements needed to define MCO performance, physical and quality characteristics, environmental conditions, and transportability. The italicized text below each requirement describes how the design complies.

3.1 Design Life

The MCO shall maintain fuel elements and fuel fragments in a critically safe array throughout its design life of 40 years both before and after being subjected to the design basis accidents described in Section 1 of Reference 1. The MCO shall not knowingly have design features that would prevent it's design life from being extended to a total of 75 years. Design life of the pressure relief valve shall be six years.
Refer to Section 4, Item 1.

The MCO is constructed from austenitic stainless steel with high resistance to corrosion from all aspects of the environment the system is expected to see over the expected lifetime. There are no components making up the system that have any known mechanism that will cause the system not to sustain the require design lifetime. None of the design basis accidents described is known to prevent the MCO from completing the expected lifetime or extending it to 75 years. The relief valve is specified by DESH to having an expected design life greater than the required 6 years based on the expected usage.

3.2 SNF Confinement

The MCO shall confine its contents during all normal operations and after being subjected to the design basis accidents described in Section 4.19.2 of Reference 6.1. The MCO shall be designed to facilitate confinement while process connections are being made and in conjunction with process piping during process operations. This confinement requirement does not apply to a pressure relief discharge path during actuation of any MCO, CVD or HCS pressure relief device.
Refer to Section 4, Item 2.

The MCO is designed to confine its contents during all normal operation and during the design basis accidents described in Reference [6.1]. The confinement is met by a 304L stainless steel shell that is closed with a mechanical seal between the shield plug and the shell. The vessel is designed to and fabricated in accordance with the intent of the ASME Code Section III Division 1 Subsection NB. Reference [6.2]. Exceptions to the code are listed in Appendix 18. The process plugs are designed to couple with an operator tool that will allow them to be operated within a sealed environment providing the confinement requested. See Appendix 1.

3.3 SNF Containment

The MCO shall maintain its containment capabilities during and after being subjected to the design basis accidents described in Section 4.19.2 of Performance Specification Rev. 3, except for the cask drops as noted in Section 4.19.2 of the Performance Specification Rev. 3. During Hanford on-site transportation, process operations, and staging at CSB prior to hot conditioning, the total gaseous leakage across the MCO pressure boundary, including process connection seals but excluding controlled flow through any port, shall not exceed 1×10^{-4} SCC/sec. This gaseous leakage rate is based on a clean seal and a clean sealing surface at the final mechanical closure boundary. The MCO, when sealed by welding after hot conditioning, shall be capable of not exceeding a maximum total leak rate of 1×10^{-7} SCC/sec.
Refer to Section 4, Item 3.

The containment is provided by the same shell and seal system provided above. The port operators valves and pressure relief devices are designed to meet the 1 x10^{-4} scc/sec requirements. To provide additional containment all ports are designed to have covers with metal seals. These seals are capable, as is the main seal, of meeting the 1x10^{-4} scc/sec criteria. The shell is designed and analyzed for the design basis to comply with Reference [6.2]. The shell is not required to meet Reference [6.2] when it is in the cask for the horizontal and corner loadings. This due to the cask being designed with a collar that provides a ring/point load to the shell. The shell being fabricated from material with high elongation has the potential of deforming with out breaching over this feature but would have localized stresses above the allowables.

During fabrication the shell is leak tested to 1x 10^{-7} SCC/sec to verify its containment capability. The closure cap can not be leak tested after installation due to the configuration. The closure weld can not be volumetrically inspected, hence it can not fully comply with a Reference [6.2]. This is an exception to the code compliance and is fairly standard with commercial sealed dry fuel storage canisters. The design here differs, since the NRC typically requires redundant closure welds. The MCO could provide redundant seals if the port covers were in place prior to the installation of the cover cap.

3.4 Maintainability

The MCO shall be designed to minimize the need for preventative maintenance throughout its design life. The MCO shall be designed to allow replacement of the externally mounted pressure relief devices/HEPA filter.
Refer to Section 4, Item 4.

As can be seen in the detailed drawing in Appendix 1 and discussed in Appendix 2 the MCO is designed entirely out of austenitic stainless steel which provides for basically a maintenance free package during its expected lifetime for the expected environment. The process plugs, covers and relief devices are designed for remote operation to facilitate maintenance on those components.

package during its expected lifetime for the expected environment. The process plugs, covers and relief devices are designed for remote operation to facilitate maintenance on those components.

3.5 Human Factors

The MCO components shall be designed to facilitate handling and assembly with the use of appropriate handling equipment. The MCO design shall also enable handling while wearing protective clothing used in radiation zones (e.g. coveralls, gloves, booties, mask, breathing apparatus, etc.).
Refer to Section 4, Item 5.

The MCO components can all be handled with remote equipment and personnel in protective clothing. Small components such as seals and bolts are captured or fastened to the larger components that can be handled with the aid of hoists, cranes, etc. The MCO shell can be handled by threading in the locking ring and hoisting from the locking ring. The shield plug can be handled by attaching a lifting device to the bolts holes provided in the top section. The baskets can be handled by their lifting device provided by others. The cover plate seals are snapped into place by the used of elliptical seals. The main seal is held into place by small clips.

3.6 Interchangeability

To the maximum extent possible (design goal), MCO components with like functions shall be interchangeable (i.e., any set of like baskets can be loaded into any MCO shell, any MCO shield plug and locking ring can be used to close and seal any MCO shell, etc.).

The MCO shell, shield plug, lifting ring, cover cap, and the baskets shall have unique identification numbers for tracking and accountability purposes.
Refer to Section 4, Item 6.

All components are dimensioned as shown in Appendix 1 so that after welding and final machining they are all interchangeable. The drawings and the fabrication specification provide for the Buyer supplied numbering and marking system that provides for the required tracking and accountability.

3.7 Environmental Conditions

The MCO shall be capable of performing its mission while subjected to the environmental conditions listed in Table 3.1.
Refer to Section 4, Item 7.

The selection of materials in Appendix 2 and the applicable stress values used for the materials in the analysis performed in Appendices 4-12 insure that the MCO and the fuel baskets are fully functional for the environmental conditions stated above. All containment seals are also selected for these environments, as are the process plug seals.

3.8 Transportability

After fabrication, MCO components shall be transportable by highway from the fabricator facility to the location within the Hanford site where they will be warehoused until requested for the packaging and removal of SNF.
Refer to Section 4, Item 8.

The dimensions of the MCO parts, as shown in Appendix 1 permit transport from the fabricator facility to the warehouse site within Hanford. Suggested packaging of the components for highway transport is provided in the fabrication specification.

Table 3.1. External Environmental Conditions (as seen by MCO)

Parameter	Condition
Hanford Site:	
Temperature (Air)	Range: -33 to 46°C (-27 to 115°F) Rate of Increase: 14°C (26°F) in 20 minutes Rate of decrease: 13°C (24°F) in 1 hour
Relative Humidity	Range: 5 to 100% Rate of Change: Negligible
K Basin Storage Pool:	
Temperature (Water)	Current Range: 6°C to 38°C (43°F to 100°F) Maximum Allowable: 38°C (100°F) [see 3.3.1.3]
pH	Current Range: KE: 5.5 to 7.5 KW: 5.5 to 7.5 Allowable Range: KE and KW: 5.0 to 9.5
Electrical Conductivity	Range: KE: Up to 5 μS/cm KW: Up to 2 μS/cm Note: μS/cm= micro Siemen per centimeter
Chloride Content	less than 1 ppm
Nitrate Content	less than 1 ppm
Sulfate Content	less than 1 ppm
Phosphate Content	less than 1 ppm
Fluoride Content	.25 ppm
Sodium Content	1 ppm
Calcium Content	2 ppm
Iron Content	1 ppm
Cold Vacuum Drying Facility:	
Temperature	10°C to 75°C
Transportation:	

Parameter	Condition
Transportation:	
Temperature	0°C to 75°C
CBS (Staging):	
Temperature (Tube gas)	10°C to 132°C
Temperature Cycling	Refer to Chapter 4 of HNF-SD-TP-RTP-004, Rev. 0
Relative Humidity	Refer to Chapter 8 of HNF-SD-TP-RTP-004, Rev. 0
Hot Conditioning System:	
Temperature	25°C to 375°C
CBS (Storage):	
Temperature (Tube)	10° to 132°C
Temperature Cycling	Refer to Chapter 4 of HNF-SD-TP-RTP-004, Rev. 0
Relative Humidity	Refer to Chapter 8 of HNF-SD-TP-RTP-004, Rev. 0

3.9 MCO Design Overview

3.9.1 Code Requirements

The MCO shall be designed in accordance with DOE Order 6430.1A, General Design Criteria (DOE 1989). Safety Class (SC) and Safety Significant Components (SS), providing fuel containment, confinement, and criticality control, shall be constructed to meet the intent of ASME Boiler and Pressure Vessel Code, Section III, to the extent specified in this Performance Specification, *Rules for Construction of Nuclear Power Plant Components*, Subsection NB (ASME 1995) under the component safety group as guided by the NUREG/CR 3854, UCRL-53544, *Fabrication Criteria for Shipping Containers*, 1984. The Nuclear Regulatory Commission (NRC) positions in Regulatory Guides 1.84 and 1.85 on ASME Section III code cases shall be reviewed prior to using such code cases for safety class applications for the MCO. All deviation from Subsection NB shall be documented and justified. (Appendix C, ASME Code Notes and Exceptions, is provided as a guide to the relevant ASME code. Appendix C contains a list of potential exceptions to the ASME Boiler and Pressure Vessel Code (Subsection NB) that may be applied for MCO construction; others may need to be added as the design evolves.).
Refer to Section 4, Item 9.

The applicable sections of the ASME code are applied to the various components of the MCO in accordance with the Safety Analysis Manual HNF-CM-4-46 as shown below.

System/Component	Function	SSC Designation	Failure Consequences
MCO Components			
Shell	Contain/Protect SNF	SC	Release of radioactive contents which could exceed offsite exposure limits; loss of contingency protection against nuclear criticality accident
Shield Plug	Contain SNF, protect personnel	SC	Release of radioactive contents which could exceed offsite exposure limits
L&L Ring + Bolts	Maintain pressure on main seal, allows for lift of loaded MCO	SC	Release of radioactive contents which could exceed offsite exposure limits
Cover Cap	Seal MCO after hot conditioning	SC	Release of radioactive contents which could exceed offsite exposure limits
IA Baskets	Maintain MK IA SNF elements and scrap in a Critically Safe Configuration	SC	Loss of double-contingency protection against nuclear criticality accident
IV Baskets	Hold MK IV SNF elements and scrap	GS	No release consequences
Primary Rupture Disk	Protect MCO pressure boundary	SC	Overpressurization of MCO resulting in an uncontrolled release which could exceed offsite exposure limits
Plug Valves	Process ports to accommodate gas flows in support of MCO processing	SS	Inability to process the MCO, release of radioactive materials into the environment which exceed exposure limits
Process Internal Filter	Maintain most radioactive solid materials within the MCO	SS	Release of radioactive materials from the MCO, pressure buildup within the MCO, loss of defense in depth protection for release of radioactive materials

System/Component	Function	SSC Designation	Failure Consequences
External HEPA	Allows MCO to be stored in a vented configuration at the surrounding atmospheric pressure	SS	Release of radioactive contaminants into the storage tube, pressure buildup within the MCO, loss of defense-in-depth protection for release of radioactive materials
Long Process Tube	Bulk water removal, introduction of gases during processing, and reflooding, if necessary	SS	Inability to remove water from MCO, inability to introduce gases to process MCO, prevents processing which puts the MCO into a safe configuration
Short Process Tube	Possible water removal prior to shipping to CVD, connects to rupture disk as vent path, backup process exit	SC	Rupture disk failure to relieve internal MCO pressure, inability to remove water prior to shipping to CVD
2 mm Process Tube Screens	Keep particles < 2 mm in diameter in the MCO	SS	Particles larger than 2 mm may leave the MCO
Seal	Seals MCO shield plug to shell	SS	Release of radioactive materials from the MCO, pressure buildup within the MCO, loss of defense - depth protection for release of radioactive materials
Orifice Plates	Regulate gas flow from the MCO	SS	Unregulated gas release rate from the MCO
Process Relief Valve	Allows gases to leave MCO at a pressure below safety class pressure relief device setting	SS	Pressure buildup within the MCO resulting in venting through rupture disk
Guard Plate on Shield Plug	Protects internal MCO process filter, short process tube and 2 mm screen	SS	Potential damage to filter, short process tube, and screen
Basket Grapple Receptacle	Provides an interface between the baskets and the MCO Loading System	SS	Fuel basket drop resulting in spilled fuel within the basin

The Sections of the ASME Code Section III Division 1, Subsection NB, Reference [6.2] and Subsection NG, Reference [6.3] are applied to the containment boundary and Mark 1A baskets, respectively. The containment boundary is an SC item, since its failure would result in a potential release. The Mark 1A baskets require SC consideration since the geometric control is required for criticality control. The MCO and its fuel baskets are designed to the intent of the Code where applicable and are not Code stamped components. The significant exceptions to the Code for the containment vessel is the lack of any volumetric NDE of the final closure weld where the cover cap is welded to the MCO collar. The Mark 1A baskets are assembled with spring pins that are unobtainable with all the Code material requirements. SS items are designed and fabricated to applicable sections of the ASME Code as set by the Performance Specification. GS items (Mark IV baskets) are evaluated to the applicable code specified by the Performance Specification (ANSI N14.6).

3.9.2 MCO Design Criteria

The MCO design shall implement the following criteria:

- No ASME Code stamp required
- Design pressure: 150 psig
- Design temperature: 375 °C
- Processing operating pressure: full vacuum internal with 25 psig external pressure, at 75°C
- Processing operating pressure: full vacuum internal with 0 psig external pressure, up to 375°C
- Processing operating pressure: 75 psig internal with 0 psig external pressure up to 375°C
- Post processing maximum steady state pressure and temperature: 150 psig internal, up to 132°C
- Design thermal transient under normal HCS conditions (excluding cover cap weld) of 100°C/h applicable from 20 to 350°C over a maximum of five (5) full thermal cycles
- The MCO assembly must be designed to accommodate 1.0 inch differential thermal expansion, in axial direction, between the basket stack and the MCO shell and maintain basket nesting and engagement of the top basket with the shield plug
- Maximum allowed radial temperature gradient between the outside of the MCO shell and the center of the MCO shield plug of 100°C, and a design radial temperature difference within the MCO shell wall of 5°C

  The axial temperature distribution is as follows and as shown in the temperature distribution profile (Figure 1). Figure 1 illustrates the estimated wall temperatures along the MCO length during the heat up and cool down cycles of the hot conditioning process.

The curves presented on the figure are defined as follows:

TPLUG -	average temperature of MCO closure plug
T3 -	inlet air temperature
TA270 -	temperature of MCO sidewall at bottom
TB70 -	temperature of MCO sidewall approximately 17 inches above the bottom
TC70 -	temperature of MCO sidewall approximately 45 inches above the bottom
TD70 -	temperature of MCO sidewall approximately 73 inches above the bottom
TE70 -	temperature of MCO sidewall approximately 101 inches above the bottom
TF70 -	temperature of MCO sidewall approximately 129 inches above the bottom
TG70 -	temperature of MCO sidewall approximately 132 inches above the bottom
TG74 -	temperature of MCO sidewall approximately 145 inches above the bottom

Refer to Section 4, Item 10-22.

The design pressure of 150 psig and a design temperature of 375°C is used for evaluation of the MCO for all normal conditions and design basis conditions inn Appendices 4-12. Appendix 12 demonstrates the MCO's compliance with the applicable code requirements for the conditions stated above.

3.9.3 Maximum MCO Assembly Weight

The gross weight of MCO (including baskets) containing 288 Mark IA fuel assemblies should not exceed ***16,175*** lbs or ***17,487*** lbs flooded. These weights are based on a 288 Mark IA SNF assembly fuel load with a SNF weight of ***11,436*** lbs. The gross weight of a MCO containing 270 Mark IV fuel assemblies shall not exceed ***19,142*** lbs dry or ***20,357*** lbs flooded. This is based on a 270 Mark IV SNF assembly fuel load with a SNF weight of ***14,950*** lbs. Weights as quoted are design goals and subject to changes as the design evolves.
Refer to Section 4, Item 23.

Detailed weight calculations for each component of the MCO are provided in Appendix 3. The summary of the expected weights is shown that the nominal MCO, without cover, with Mark 1A fuel dry weighs approximately 17,248 lbs and flooded weighs approximately 18,552 lbs. The MCO with the Mark IV fuel weighs approximately 19,378 lbs dry and approximately 20,657 lbs flooded.

3.9.4 Height of the MCO

The maximum height of the MCO shall not exceed 160 inches (without final cover cap) at a temperature of 25° C. This includes any connections or devices integral to the MCO in facilitating connections to external process equipment and in providing pressure relief. When the final cover cap is welded in place, the maximum height shall not exceed 165.60 inches.

Refer to Section 4, Item 24.

The maximum height of the MCO with the cover cap off is 160 inches. The maximum height of the MCO with the cover cap in place is 165.4 inches, as shown in Appendix 1.

3.9.5 Diameter of the MCO

The nominal outside diameter of the MCO is 24 inches. In no case, including post-accident conditions, is the MCO inside circumference below the bottom of the shield plug allowed to exceed 73.04 inches (23.25 inches * π). The MCO shell is allowed to have a 25.31 inch maximum as-built OD above the 148 inch elevation measured from the MCO bottom. These dimensional limits are applicable during normal operations and post accident conditions.
Refer to Section 4, Item 25.

The inside circumference below the bottom of the shield plug is maintained to be less than 73.04 inches as shown in Appendix 5 and Appendix 11. These evaluations include the post-level D events as defined in the Performance Specification. The only event that has the potential of any significant distortion of the circumference of the shell is the side drop in the cask and is localized in the area of the collar in the cask. The distortion would be inward (localized denting) and hence the circumference requirement would not be violated.

Figure 1. MCO Axial Temperature Distribution for Hot Conditioning

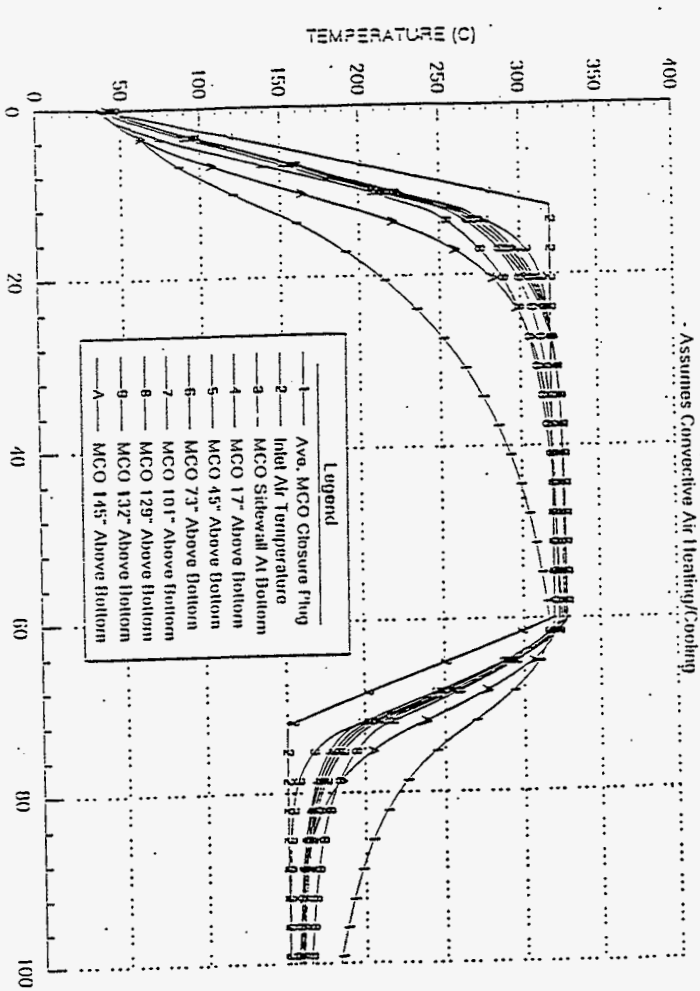

3.10 MCO Shell Design

The MCO shell is a cylindrical vessel that provides access to its cavity through its top end and receives a shield plug at its top end for closing. The MCO shell has a bottom assembly that provides a permanent sealed closure on the shell bottom end. The MCO bottom assembly is nominally flat and must include an internal liquid collection sump at the MCO centerline. The MCO must be designed with a 1.49 inch nominal distance between the inside of the MCO bottom assembly and the bottom of the lowest basket. The MCO must permit or allow loading and stacking of the fuel baskets within its cavity. The empty shell must be designed to load into and out of the transport cask.
Refer to Section 4, Item 18.

As shown in Appendix 1 the MCO shell assembly consists of a forged bottom closure with a low point in the center for facilitating the removal of water, a cylindrical 0.5 inch thick wall shell and a forging collar at the top that mates with the shield plug and locking ring. The top closure permits full access to the inside cavity for stacking of the fuel baskets. All materials are 304L stainless steel. At the bottom of the cavity, there are 6 basket support plates in the form of a spider supporting the bottom basket and maintain a 1.49 in nominal distance between the basket and the bottom head. The empty shell can be loaded into the cask by assembling the locking ring in place and grappling the lift ring on the locking ring similar to what is done in handling the loaded MCOs. The MCO may be uprighted with standard rigging (slings etc.) although a turning fixture may facilitate the operation. The MCO should not be handled or lifted without the lifting ring in place. The use of other fixtures to lift the MCO increases the potential of damaging and misshaping the collar area so that insertion of the locking ring would be very difficult.

3.11 MCO Closure Design

The MCO shall be designed with a mechanical closure configuration. The closure shall rely on a mechanical crushable seal to maintain the containment and confinement requirement at the final closure interface. The closure system shall utilize the shield plug/shell interface as the closure boundary where the crushable seal shall be located. The shield plug shall be held in place via a locking ring threaded into the MCO shell. The locking ring shall contain screws that will be tightened to force the shield plug down against the crushable seal while pushing up on the locking ring.

The MCO shall be designed to incorporate a final welded closure cap over the shield plug. The cap shall be welded to the MCO shell. The cap shall be capable/configured for lifting the MCO with the same equipment described in Section 4.13 of the Performance Specification (Reference 6.1). The cap shall be capable of withstanding the pressure rating of 150 psi at 132°C and shall meet the drop

criteria for the drop into the CSB tubes per Table 3 of the Performance Specification. The closure cap shall be capable of being fitted with a replaceable rupture disk set at 150 psig.
Refer to Section 4, Item 19.

The MCO closure consists of a shield plug, locking ring and main seal as shown in Appendix 1. The shield plug assembly rests on a seal ledge on the inside of the MCO collar. The shield plug has a groove in the mating surface to this ledge which holds the main seal and prevents over crushing of the seal. The shield plug is held in place by the locking ring assembly which threads into the collar with a double lead buttress thread. Once the locking ring is installed, the eighteen 1-½ inch diameter set screws are torqued, generating a force between the shield plug and the locking ring. The force seats the metal main seal and maintains a minimum sealing load on the seal during all loading conditions. The evaluation of the set screws and their required torquing is shown in Appendix 4. The locking ring is designed so that, with an 1/8" gap between its bottom surface and the shield plug, the top surface of the locking ring is 1/8" below the top surface of the shield plug. The main seal is a Helicoflex seal. The details of the seal can be found in Appendix 13.

The closure cap consists of a 304L stainless steel forging that mates with the MCO collar. That closure weld is a full thickness weld that is not 100% volumetric examined. Analysis of the weld and the lifting ring which is attached to the cover cap is found in Appendix 6. The lifting ring on the cover cap is the same diameter and thickness as the lift ring on the locking ring. Analysis is performed combining the lifting loads with the 150 psig internal pressure at 132°C.

3.12 Fuel Basket Design

The Mark IA fuel storage and scrap baskets shall meet the intent of ASME Boiler and Pressure Vessel Code, Section III, Subsection NG (ASME 1995) under the component safety group as guided by the NUREG/CR 3854, UCRL-53544, Fabrication Criteria for Shipping Containers, 1984. (Explanation: Mark IA fuel has a higher U_{235} enrichment than Mark IV fuel. The Mark IA basket structural integrity is required for criticality control whereas basket structural integrity is not required for Mark IV fuel. Therefore, ASME Section III, Subsection NG requirements shall be applied to the construction of the Mark IA fuel storage and scrap baskets.)

The design shall meet Service Level A requirements for normal operating loads and Service Level D for accident conditions under ASME Boiler and Pressure Vessel Code, Section III, Subsection NG. During accident conditions the baskets designed for Mark IA fuel and Mark IA fuel fragments/scrap shall maintain the criticality control features defined in Section 4.19.3 of Reference 6.1.
Refer to Section 4, Item 20.

The Mark 1A baskets are designed to the intent of the ASME Boiler and Pressure Vessel Code, Section III, Subsection NG (ASME 1995), Reference [6.3]. The evaluation of the baskets for the Service Level A and load conditions defined in the Performance Specification Reference [6.1] are found in Appendix 7. The combined requirement of sequential loading from the vertical and horizontal drop events is addressed by conforming to both the ASME Code, Service Level D requirements and the Performance Specification criticality requirements. This was necessary to ensure that the center tubes do not move more than two inches radially and that the basket axial deformations are small enough to prevent the baskets from becoming disconnected from one another permitting fuel particles to enter the center tube.

3.12.1 Mark IV Baskets

For clarification, the Mark IV fuel storage and scrap baskets do not have to be designed to meet the intent of the ASME Code. (Explanation: Mark IV fuel has a lower U_{235} enrichment than Mark IA fuel. Analyses indicate that the Mark IV fuel cannot achieve criticality in an MCO under normal operating conditions or accident scenarios. It follows that basket structural integrity for Mark IV criticality control is not required as is the case for Mark IA fuel and scrap. Therefore, ASME Code, Section III, Subsection NG requirements are not required for the design or construction of the Mark IV fuel storage and scrap baskets.)
Refer to Section 4, Item 20.

For consistency with the Mark 1A structural evaluations, the Mark IV baskets were evaluated to ASME Code, Section III, Subsection NG, allowables for the Level A service Loadings. No Level D loadings were considered for the Mark IV baskets.

3.12.2 Mark IA and Mark IV Baskets

For the handling of both loaded and unloaded Mark IA and Mark IV baskets, the design shall meet the safety factors required by the American National Standards Institute (ANSI) N14.6-1986 for non-critical lifts. (Design and qualification of the basket grapple interface will be performed by the Cask/Transportation subproject and will not be the responsibility of the MCO Design Agent). The ANSI safety factors apply from 5°C through 100°C. Currently anticipated SNF basket code deviations are listed in Appendix C, ASME Code Notes and Exceptions. This list is subject to revision.

Materials of construction for the Mark IV and Mark IA storage and scrap baskets shall be 304L stainless steel or a material having equal or greater corrosion resistance properties. Other materials may be used if shown suitable. All baskets will be annular open-top containers with a maximum OD of 22.625 inches at 25°C. All baskets will be able to support the fuel at 1.0 g while at 375°C. The basket grapple interface for all baskets shall be a ⅛-inch deep by one-inch long radial groove

beginning 1 ⅞-inch from the top end of the basket center tube. Basket sizing shall accommodate a ½" clearance between the top of the fuel elements and the bottom plate of the basket above. **Refer to Section 4, Item 20.**

Both the Mark 1A and the Mark IV baskets were evaluated for lifting in accordance with ANSI N-14.6 for non critical lifts. The baskets were also evaluated for the ability to support the fuel and the baskets above at 375°C. The evaluations can be found in Appendix 7 for the Mark 1A baskets and Appendix 8 for the Mark IV Storage basket and Appendix 9 for the Mark IV Scrap basket. The adequacy of the lifting groove per the Performance Specification is evaluated by the Buyer. The lifting configuration to interface with lifting equipment supplied by others, although not per the Performance Specification as stated above is per the technical direction given by the Buyer.

3.12.3 Summary of MCO Fuel Basket Types

The MCO fuel baskets are categorized into two major configurations: 1) intact fuel element baskets, and, 2) scrap fuel (fragment) baskets. Fuel baskets must also maintain criticality control for the higher enriched (Mark IA) fuel. These basic requirements lead to four different basket types as follows:

- Type (1) must have the ability to hold 48 Mark IA (higher enriched) intact-fuel elements and must have a criticality control exclusion void per Section 4.19.3 of Reference 1 built into the basket.

- Type (2) must have the ability to hold 54 Mark IV intact-fuel elements, and does not need the exclusion void.

- Type (3) will hold Mark IA (higher enriched) scrap fuel (fragments), and must have a criticality control exclusion void per Section 4.19.3 of Reference 1 built into the basket.

- Type (4) will hold Mark IV scrap fuel (fragments), and does not need the exclusion void.

Note: SPR fuel will be loaded into Mark IA scrap baskets.

Refer to Section 4, Item 20.

Appendix 1 shows that the Mark 1A storage basket can hold 48 Mark 1A intact-fuel elements and has the criticality exclusion void required. The Mark IV storage basket has the ability to hold 54 Mark IV intact-fuel elements. The Mark 1A scrap basket has the same criticality exclusion void as the Mark 1A storage basket. The Mark IV scrap basket can hold fuel fragments as required.

3.12.4 Summary of MCO Fuel Basket Functions Summary of MCO Fuel Basket Functions

All basket designs shall incorporate a center support tube for axial support during lifting and for protection for the long process tube.

All baskets have a center support tube for axial support during lifting and for process tube protection.

Each basket shall be capable of being loaded, in the upright position, by the Fuel Retrieval System equipment in the K Basin pool.

All baskets have the same open spacing and access defined in the preliminary design provided by Buyer.

The baskets must be stackable inside the MCO with the basket centerline coincident with the MCO centerline. While stacked inside the MCO, the baskets must provide for insertion of a long process tube down the MCO centerline for water draining and gas transport, as needed.

All baskets have the same stackable features that allow them to be stacked with the centering coincident and have internal guides to provide for insertion of the long process tube. As described in Appendix 1, the interfaces between baskets are such that the tube, once started, will not hang up during the insertion operation.

The loaded baskets shall be capable of being easily and safely handled in the basin water, reliably loaded and nested into the MCO/cask assembly in the K Basins load out pits, and engaged with the shield plug shield/guard plate (to be designed) and axial stabilizer. Basket design shall account for differential thermal expansion when subjected to processing temperatures inside the MCO.

The loaded baskets can be easily and safely handled in the basin water. Lead-ins and alignment mechanisms allow the baskets to be loaded and nested in the MCO in the K Basins. The shield plug assembly has an axial stabilizer that engages with the top basket and allows for a differential thermal expansion of a 100°C.

The baskets shall drain free and not capture or retain excessive water to accomplish the bulk water removal step by the CVD System.

The baskets are designed to drain freely and there are no cavities that will retain excessive water.

The baskets shall support heat transfer into and out of the fuel while in gaseous and vacuum environments inside the MCO. The primary heat transfer mode is radiation and conduction during

the static (storage/staging) state. Forced flow (convective) cooling of the fuel in the MCO baskets (particularly the scrap baskets) is a very large and essential component of heat transfer during the HCS process, and must be facilitated by the basket design. The baskets shall support gas flows needed to properly dry and condition intact fuel and scrap fuel during the vacuum drying and hot conditioning processes.

The baskets are designed with similar air flow capability as the Buyer supplied preliminary design. Review by the Buyer indicates acceptability to criteria not presented in the Performance Specification.

The baskets shall be compatible with the fuel and MCO containment materials during the expected temperatures, pressures, and atmospheres inside the MCO during handling, shipping, storage and processing.

The baskets are fabricated from austenitic stainless steel which is fully compatible with the MCO containment which is fabricated from austenetic stainless steel. All major parts of both components are fabricated from 304L stainless steel.

The baskets shall maintain their structural integrity (with specified exceptions) during expected internal MCO environmental conditions, normal MCO handling situations, and after accidents (Mark IA storage and scrap baskets only). This structural integrity is required to maintain criticality safety of the MCO when loaded with Mark IA baskets.

As shown in Appendices 7-9 the baskets will maintain their structural integrity environmental and normal handling conditions. Appendix 9 shows that the Mark 1A baskets will maintain the required structural integrity after the Design Basis Accident loadings specified in the Performance Specification. Reference [6.1].

The baskets shall be sufficiently strong to preserve the processing ability of the MCO for the bulk water removal, vacuum drying, and hot conditioning processes during normal MCO handling, various internal MCO environments, and after MCO DBA accidents of Section 4.19.2 of Reference 6.1.

Appendix 7 shows that the Mark 1A baskets will retain their geometric configuration so that processing capabilities are not compromised during normal handling and after the Design Basis Accident Loadings specified. The Mark IV baskets which have no structural integrity code criteria per the Performance Specification Reference [6.1] maintains its processing capability by the use of a one-inch XXS pipe for the long processing tube. The XXS processing tube design provides considerable resistance to crushing or shear which would reduce the processing capability.

The baskets shall not introduce any additional gas producing materials into the MCO which significantly increases the pressure of the MCO during storage.

The baskets are made entirely out of austenitic stainless steel and have no known gas producing mechanisms in the environments specified.

The baskets shall not introduce any materials that will appreciably accelerate corrosion of or significantly alter the properties of the MCO containment boundary.

Both the baskets and the MCO containment boundary are made from austenitic stainless steel, therefore the baskets will not accelerate the corrosion of or significantly alter the properties of the MCO containment.

The baskets' bottom structural plate shall have a minimum weight not less than 50 lbs. (Note: Scrap baskets may include the weight of the gussets with the bottom plate to meet this requirement.)

As can be seen in Appendix 3 the bottom plates of the Mark 1A baskets and the Mark IV storage basket weigh more than 50 pounds. The Mark IV scrap basket combined with the gussets or dividers in the baskets weighs more than 50 pounds.

3.13 MCO Shield Plug Design

The MCO shield plug will be a solid cylinder designed to mate with the open end of the MCO shell. The MCO shield plug also mates with the end effector on the top SNF fuel basket. The MCO assembly must have a one-inch minimum free space between the bottom of the guard plate and the top of the SNF elements or fragments at 72°F. The shield plug will only provide worker shielding on the top of the MCO. The shield plug shall feature an integrally machined axisymmetric lifting ring with a 12 ton lifting capacity when gripped with six equally spaced 1.97" tangential length by 0.66" radial contact length grippers. The ring will facilitate handling of the MCO package when unloading from the transport cask, CSB storage tubes, and process cells with the MHM.
Refer to Section 4, Item 21.

The shield plug assembly which consists of the shield plug , guard plate, internal filters, process valves and pressure relief devices has a basket stabilizer extension which centers the top basket. The assembly has a minimum of one inch clearance at 72°F above the fuel or fragments. The shield plug is held in place with a locking ring that has a lifting ring with a 12 ton capacity when gripped with six equally spaced grippers as specified. The demonstration of this capacity is shown in Appendix 11.

The MCO lifting ring design and cover cap lifting rim area must exhibit the safety factors (for non-critical lifts) required by the American National Standards Institute (ANSI) N14.6-1986: "Special Lifting Devices for Shipping Containers Weighing 10,000 Pounds (4500 kg) or more." This standard requires that any handling or lift features required to perform non-critical lifts shall be capable of demonstrating a safety factor of three (3) on material yield and five (5) on material ultimate strength. ANSI N14.6 does not apply to the MCO shell.

The lifting ring area of both cover cap and the lifting ring complies with the factors of safety for non-critical lifts as specified in ANSI N14.6 as shown in Appendices 6 and 11, respectively.

The MCO shielding design shall meet as low as reasonably achievable requirements in accordance with 10 CFR 835, Occupational Radiation Protection (CFR 1993), Subpart K, DOE Order 5480.11, Radiation Protection for Occupational Workers (DOE 1988), Paragraph 9a, HSRCM-1, Hanford Site Radiological Control Manual (RL 1994), Sections 111 and 311, HNF-IP-1043, HNF Occupational ALARA Program (HNF 1995), Section 8.0, and NRC Regulatory Guide 8.8, Information Relative to Ensuring that Occupational Radiation Exposures at Nuclear Power Stations will be As Low As Reasonably Achievable, Revision 3, Section C.2.b, "Radiation Shields and Geometry", and Section C.2.f, "Isolation and Decontamination."

The MCO shield plug will shield workers against photons and neutrons emanating from the inside of the MCO. This shielding shall maintain an average dose across the top of the shield plug of 30 mrem/hr on contact (two inches) for the average MCO fuel inventory shown in Table 1 of Reference 6.1. The 30 mrem/hr limit includes radiation streaming between the MCO shield plug and MCO shell and streaming around penetrations. Streaming emanating from between the MCO and cask is not included. Streaming shall be minimized. For the worst case MCO specified in Reference 6.1, Section 3.1.3.1, Radioactive Source Term, the average dose across the top of the shield plug on contact (two inches) shall not exceed 100 mrem/hr.

The MCO provides more than the specified shielding as demonstrated in Appendix 16. A summary of the shielding analysis is provide below.

Source Term	*Cleaned and reloaded Mark IV fuel elements: 5.43 MTU; 11 energy bins; 8.29 x 10^{15} photons/sec*
Model Geometry	*27 cmss lid; 4 penetrations; 1"central and lateral holes thru lid; 4 cm SS plate under filters; collar in place.*
Detector Geometry	*Tissue equivalent plastic in 3 thicknesses and 8 rings*
Requirement --<100 mrem/h contact, areal average (Peak Load)	*<7mrem/h photons and neutrons.*
Requirement—30 mrem/h contact, areal average (Nominal Load)	*<2mrem/h photons and neutrons.*

The shield plug will provide access to the interior of the MCO via a minimum of three penetrations. The penetrations will connect to four ports counterbored into the top of the shield plug. A description of the ports, penetrations and associated equipment interface follows.

The shield plug has four penetrations with four ports as shown in Appendix 1.

Port #1. Connects to a penetration that leads to the internal HEPA filter bank.

- Up to 1" diameter drilled penetration
- Contains resetting pressure relief device with built in ¼" or less, restrictive orifice
- Capable of replacing relief valve with a non-safety class rupture disk, and
- Capable of replacing relief device with an external HEPA filter

One penetration is one inch in diameter that connects to the internal HEPA filter bank. The port consists of a ¾ NPSM female thread that can receive either a standard HEPA filter with similar thread (Appendix 15) or a rupture disk with mating threads (Appendix 12) or a bushing that adapts to a ⅛-inch relief valve that is specified by specified by the buyer. The recommended seals for this port is metal C-seals that are retained on the components so that the parts can be replaced. The port as required can have a cover flange that is either

a blind flange or a flange with a ¼-inch diameter hole in it. This cover has metal C-seals that provide a seal. The covers and attachment bolts are evaluated in Appendix 10. These pressure relief devices are non ASME Code devices per the Performance Specification.

Port #2. Connects to a penetration that leads to the internal HEPA filter bank.

- 1" diameter drilled penetration, and
- Port contains a process valve

Another port connects to a one-inch diameter penetration to the HEPA filter bank. The port is accessed by a process valve that may be covered with blind flange, as stated above. The process plug consists of a 1-⅞ inch threaded plug that is drilled in the center and then cross drilled below the top of the threads. As the plug is unthreaded, it rises exposing the cross drilled holes and allowing flow. The top has a hex head that can mate with a valve operator. The seal is maintained with a C-seal at the top of the threads that has been proven to reseal in the excess of five times. The torque required to seat the seal is evaluated in Appendix 10 3and the seal data is provided in Appendix 14. The valve operator can use the same sealing surface as the blind flanges to seal to the shield plug before operating the valve.

Port #3. Connects to the long process tube which has a 2 mm screen at the end.

- Approximately .54" ID (½" sch. 80 pipe) minimum diameter drilled penetration
- Port contains a process valve
- Requires differentiation in connection for valve operator

The center long process tube connects to a process valve on the exterior of the shield plug via 0.609" diameter penetration. The process valve is the same as discussed above however the cover flanges are different. The cover flange is a five bolt flange compared to the four bolt flanges used to cover the other ports.

Port #4. Connects to the short process tube which has a 2 mm screen at the end.

- 1" diameter drilled penetration
- Port contains a safety class rupture disk that will be incorporated into a process valve head
- Provides backup port to Port #2

The port that connects to the short process tube which is covered by a 2 mm screen does so through a one inch diameter penetration. The process valve is similar to the ones described

above. The plug is drilled all the way through the center and has a rupture disk between the center bore and the exterior. Details can be found in Appendix 1. The rupture disk is the primary pressure relief device and is set at the design pressure. This is an exception to the ASME Code, Section III Division 1 Subsection NB, since the rupture disk cannot be used as the sole only Code relief device. The cover flanges have a four bolt pattern.

The connections leading to the long or short process tubes shall be designed to be easily differentiated by a worker looking at either the top or bottom of the shield plug. The design of the penetrations, ports, and valve mechanism shall implement the following criteria:

The seal connections for the valve operator have different bolt patterns.

- Process valves shall be capable of normal operation and achieve sealing criteria in Section 4.3 in Reference 1 for five complete cycles.

  The process valves can reseal in the excess of 5 times as documented in Appendix 14.

- Provisions for pressurizing the MCO interior with an inert gas

  The MCO can be pressurized by the gas of choice through any of the process valves.

- Provisions for purging gas from the MCO interior

  Gas may be purged through the use of any two of the process valves. The use of the long process tube would be more efficient.

- Penetrations, connections, and seals shall be leakage rate testable in accordance with ANSI N14.5, Leakage Tests on Packages for Shipment of Radioactive Materials (ANSI 1987).

  The entire MCO when assembled can be leak tested in accordance with ANSI N14.5 by filling it through one of the process ports with a detectable gas and then placing it in a chamber where a vacuum could be pulled and the gas could be detected. Similarly a pressure drop or pressure rise could be used, provided that sensitive enough instrumentation were used to detect the 1 x10^{-4} SCC/sec required leak rate.

- Provisions to make or break all connections while continuing to maintain SNF containment, with minimal spread of contamination.

By the use of the cover flange sealing surface a valve operator tool designed by others could be used to make and break all connections while maintaining containment.

- All penetrations to be sealable to the containment leak rate criteria after the process connection is terminated.

  As documented in Appendix 14, the process valve seals are resealable to the containment leak rate criteria.

- Connections shall be such as to facilitate their decontamination as per Section 4.18 of Reference 6.1.

  The connections are angled to prevent the trapping of debris and are of a smooth finish to facilitate decontamination.

- Ports, penetrations, and connections shall be accessible to the operator from the top face of the MCO.

  All ports, penetrations and connections are accessible to the operator from the top per Appendix 1.

- Penetrations and connection connections shall not appreciably reduce or impair MCO shielding.

  The shielding requirements are met with consideration of the process valves and penetrations as shown in Appendix 16.

- Provisions for removal or reinstallation of sealing mechanisms as required to cover process connections, pressure relief devices, and a low flow HEPA filter; these sealing mechanisms cannot extend above the top of the shield plug, including fasteners.

  The pressure relief and external HEPA filters are designed to be replaced and the same quality seal can be regained. The sealing mechanisms are compatible with remote operating equipment.

- Provision to bleed down, in a controlled way into the process piping, internal MCO pressure after process connections are made.

The process valve can be used to bleed down the into the process piping, MCO internal pressure with a correctly designed valve operator and pressure control device.

- Penetrations and connections shall be designed to facilitate remote operation via long handled tools, via a manipulator; and via manual means.

  The penetrations and connections are designed to facilitate remote operating as well as manual means. Features such as captured bolts on the cover flanges, standard hex head operators, seals with ability to be retained insure this.

- Ports for pressure relief devices shall contain orifice plates as required (1/4 inch or less) to limit relief flow.

  Where required cover plates with ¼ inch orifices can be installed.

- Seal material used in the resetting pressure relief valve shall maintain its properties for up to six years at up to 132°C and in a radiation environment of 40 R/hr (Total integrated dose of 2.1×10^6 R).

  The pressure relief valve is specified by the Buyer.

- Process connections shall be designed with a hex cap on the process valve for the operator to engage.

  As shown in Appendix 1, the process valves have a hex cap for the operator to engage.

- The bottom side of the shield plug shall incorporate a feature (guardplate) that will keep the internal filter elements dry during insertion of the shield plug into the MCO at the K-Basin pool.

  As part of the shield plug, there is guard plate that protects the filters as shown in see Appendix 1 and Appendix 5. This provides for an air pocket that keeps the filters dry when the shield plug is inserted into the MCO under water.

3.14 Internal Process Filter

The MCO shall have internal process filters to support the vacuum drying and hot conditioning outflows from the MCO. These filters shall meet the requirements of HNF-S-0556, MCO Internal

HEPA Filter Specification, and be installed between the shield plug bottom and the guardplate. The internal process filters and short process tube shall be protected by a guardplate capable of withstanding the drop accelerations in Table 3. The filter assembly installed with the shield plug shall be capable of withstanding the drop accelerations in Table 3 and still maintain flow capability. (Note: MCO Design Agent is responsible only for the structural attachment of the filter assembly to the shield plug). The filter assembly weight shall not exceed 50 lbs.
Refer to Section 4, Item 22.

The Internal HEPA Filter Specification is HNF-S-0556 is provided in Appendix 15. Appendix 10 provides verification that the structural attachment will support a filter assembly weighing up to 50 pounds for the maximum loading of 101 g's.

3.15 Materials, Processes, and Parts

The MCO shell shall be fabricated from type 304L stainless steel. All components welded to the MCO shell must be made of type 304L stainless steel (the same material as the MCO shell). A mechanically attached shield plug and any components thereof must be made from any combination of the following: carbon steel, plated carbon steel, and/or austenitic stainless steel. All materials shall be ASME/ASTM certified materials. Ferritic steel materials used for the MCO pressure boundary shall meet the criteria of NUREG/CR-3826. See Appendix B, Mechanical Properties of Materials. Provision shall be made to preclude metal-to-metal galling in threaded MCO components. Nickel or other suitable plating may be used to reduce potential for corrosion. Thermal and chemical compatibility of materials must be shown suitable.
Refer to Section 4, Item 26.

The MCO shell, shield plug assembly and locking ring are fabricated from 304L stainless steel to insure compatibility. The process plugs are fabricated from 300 series stainless steel. No Ferritic materials are used in the design. All materials are specified as either ASME (SA) or ASTM (A) materials, as shown in Appendix 1. Metal to metal galling is minimized by requiring the use of lubricants on all threaded surfaces and allowing them to be used on other closely fitting surfaces where operationally they would be permitted, such as between the radial surfaces of the locking ring and the shield plug. Harder materials such as XM-19 and 316 is used for the threaded fasteners. Also the use of 304LN and 304N materials are permitted for the components to minimize the opportunity for galling.

3.16 MCO Corrosion Control

Specifications generated for the MCO and MCO components shall require cleanliness during fabrication, handling, and storage - before and during use. Standards such as ASTM A 380-94, "Standard Practice for Cleaning and Descaling Stainless Steel Parts, Equipment, and Systems" (ASTM 1996a), and ASME NQA-1, Quality Assurance Requirements for Nuclear Facility Applications (ASME 1994), shall be invoked for cleanliness control. Appendix D, MCO Corrosion Conditions, describes the corrosion environment encountered by the MCO during various phases of its operation. The MCO shall be designed and constructed to provide full service life under these corrosion conditions. The mechanical seal required for final closure shall be of a material best suited for this application.
Refer to Section 4, Item 27.

Appendix D of the Performance Specification demonstrates the acceptability of austenitic stainless steel specifically 304L for the environment that he MCO will experience. All components of the MCO are fabricated from austenitic stainless steel and hence there is no significant corrosion

impact on the design life of the MCO. Cleanliness requirements as noted are included in the fabrication specification.

3.17 Welded Joints

All MCO fabricator pressure boundary welds shall be made in accordance with ASME Code, Section III, Division 1, NB-3350. All welds shall be sufficiently smooth to enable easy decontamination. Butt welds to be ground flush to within .03 inches of base metal. Weld joint designs shall avoid potential contamination traps to the greatest extent practicable. All MCO pressure boundary welds and welds bearing the weight of the fully loaded MCO must be designed for and pass 100% volumetric examination (x-rays or ultrasonic) per ASME requirements. Exceptions for field welds only shall be documented and justified using the guidelines listed in Appendix C: ASME Code Notes and Exceptions.
Refer to Section 4, Item 28.

All MCO pressure boundary welds are designed and produced to ASME Section III Division 1, Subsection NB except the field closure weld which is a full thickness weld that can not be 100% volumetrically examined. The acceptance of this weld is that it provides closure to a stabilized system and the quality is insured by welding qualification and the use of liquid penetrant inspection. The margins of safety for the weld is provided in Appendices 5 and 11.

3.18 Decontamination Provisions

MCO exposed surfaces shall facilitate their decontamination. All exposed surfaces shall be smooth without cracks or crevices. Blind or hidden corners or joints in areas potentially exposed to contamination that can not be readily accessed by hand held spray devices shall be minimized.
Refer to Section 4, Item 29.

All exposed surfaces are smooth with out cracks or crevices to facilitate decontamination. Access to all surfaces is available as can be seen in Appendix 1.

3.19 Safety Requirements

Refer to Section 4, Item 30.

3.19.1 Safety Classification

MCO components shall be classified by safety class in accordance with the requirements of HNF-CM-4-46, *Safety Analysis Manual* (HNF 1995), Section 9.0. MCO components providing fuel containment and criticality control shall be Safety Class items and comply with the requirements

of HNF-CM-4-46. All other MCO components except the external HEPA filter shall be Safety Significant items. The external HEPA filter shall be a General Service (undesignated) item. Safety Class items are:

- The MCO Shell
- Mark IA SNF storage and scrap baskets
- Mark IA Scrap baskets
- Rupture Disk used in Port #4
- MCO Shield Plug Assembly (excluding all port components, except the rupture disk)

The various components of the MCO are classified into safety classes in agreement to the above in section 3.9.1. The applicable code requirements are then applied. The containment boundary components are designed and fabricated to ASME Code, Section III, Division 1, Subsection NB and the Mark 1A baskets for criticality control purposes are designed and fabricated to Subsection NG.

3.19.2 Design Basis Accidents

All Safety Class items shall maintain containment, confinement, and subcriticality during and after the Design Basis Accidents (DBAs) listed below. All Safety Significant items, whose failure could result in the failure of the Safety Class items above, shall also be designed to withstand the DBAs listed below.

NOTE: The following design basis accident loadings are required to meet the Service Level D requirements of the ASME B & PV Code, Section III, Subsection NB for Safety Class items which provide fuel containment, confinement, and criticality control. Items required to prevent failure of the Safety Class items are also required to meet the same Service Level D requirements. (Service Level D allowable stresses may be exceeded for horizontal and corner drops while the MCO is in the cask. However, the criticality control measures in 4.19.3 of Reference 6.1 shall be maintained.)

- Design Basis Fire -- Temperatures resulting from exposure to a design basis accidental fire on the outside of the transportation cask. [From 10 CFR 71.73 (3)] This basis fire shall result in exposure of the outside of the cask for not less than 30 minutes to a heat flux not less than that of a radiation environment of 800 °C with an emissivity coefficient of at least 0.9. For purposes of calculation the surface

absorptivity must be either that value which the shipping cask may be expected to possess if exposed to a fire or 0.8, whichever is greater. (This fire shall raise the MCO shell temperature to 122°C for 180 minutes after the fire. The 375°C design temperature to accommodate the hot conditioning process bounds the temperature associated with this fire.) (Note: No analyses required by the MCO Design Agent.)

- Design Basis Earthquake -- The design ground acceleration at the CSB is .35 g. Although this will be amplified due to the position of the MCOs within the facility, the design basis accident drop accelerations bound any imposed earthquake accelerations from the K Basins, CSB, CVD, and HCS. (Note: No analyses required by the MCO Design Agent.)

- Design Basis Tornado -- The CSB, CVD, and HCS incorporate preventive and mitigative features regarding radionuclide releases from MCOs due to tornadoes (as determined necessary by Probabalistic Risk Assessments). (Note: No analyses required by the MCO Design Agent.)

- Design Basis Hydrogen Deflagration -- The MCO shall maintain confinement during a design basis hydrogen deflagration event (Service Level D event) beginning at atmospheric pressure inside the MCO at 75°C. (Note: No analyses required by the MCO Design Agent.)

- Design Basis Drops -- The following design basis accident drops have been determined to create accelerations listed in Table 3 that must be survived while maintaining confinement, containment (except for cask drops) and subcriticality. Accelerations to be used for the design basis are listed in Table 3. Temperature range for these drops is 25 to 132°C and pressure range is 0 to 150 psig.

  - A two foot vertical drop of a sealed MCO package onto flat reinforced concrete. The MCO lands on the bottom end and there is no credible possibility of a side slap down secondary impact of the MCO.

Table 3. MCO and Component Accelerations (g's) Resulting From Design Basis Accident Drops

COMPONENT		g's "PISTON DROP" INTO CASK*	g's TWO (2) FOOT DROP	g's DROP INTO CSB TUBE	g's DROPPED WITH CASK [1]
Loaded MCO	Horizontal	N/A	N/A	N/A	101
	Vertical	25	54	35 (Spec) Lower MCO 28 (Calculation) Upper MCO	27
	Corner	N/A	N/A	N/A	Lid Up 33.5 Lid down 27.4
Mark IA Basket Within MCO	Horizontal	N/A	N/A	N/A	101
	Vertical	25 Bottom Basket 25 Other Baskets	54	35 (SPEC)	27 Bottom Basket 27 Other Baskets
	Corner	N/A	N/A	N/A	Lid down: top bskt 27.4; other 27.4 Lid up: bottom bskt 33.5; others 33.5
Mark IV Basket Within MCO	Horizontal	N/A	N/A	N/A	101
	Vertical	25 Bottom Basket 25 Other Baskets	54	35 (Spec)	27 Bottom Basket 27 Other Baskets
	Corner	N/A	N/A	N/A	Lid down: top bskt 27.4; others 27.4 Lid up:bottom bskt 33.35; others 33.5

* g's computed assuming the MCO is slowed by piston-like cushioning effect from air being squeezed through the 0.25 inch diametral clearance between the cask and the MCO and by the cushioning effect of adding water to the bottom of the cask. (Alternate means of limiting the acceleration to <35g are being investigated.)

[1] Reference SARP Tables B7.21 and B7.24

Angle of impact for C/G drop in cask is 10.5 degrees off vertical.

- A drop (worst case orientation) of the MCO package inside the sealed transportation cask. For an end drop scenario, a secondary side slap down shall be considered. The MCO is physically constrained by the cask walls and remains in the cask. Note: For all drops when the MCO is in the cask, the MCO does not need to maintain a leak tight seal. The MCO shall be able to retain all particulate greater than 2 mm in size or greater after the deformation occurs.

- A vertical drop of the MCO package into the transport cask. Drop heights not to exceed 21.5 feet. "Piston effect" shall be included.

- Vertical drops of MCO package into a CSB storage tube with and without another MCO already within the tube. The tubes will contain impact limiters as required to reduce impact acceleration on the MCO and internals. Each MCO acceleration is limited to 35 g within the CSB tubes.

For all accelerations the fuel shall be modeled with the properties of stainless steel except for the scrap baskets which shall have hydrostatic properties when externally loaded. In cases where one component is dropped onto another (e.g. MCO onto an MCO in the storage tube, and MCO impacting the inside top or bottom of the cask), the eccentricity of the drop is negligible and does not require consideration.
Refer to Section 4, Item 31.

In accordance with the requirements above, the loads provided in Table 3 are evaluated in two ways. The loads that are applied to the MCO shell are evaluated in Appendix 5. These are all the loads that are applied to the containment boundary and have acceptance criteria coming from subsection NB. As stated above, the horizontal loading and corner drop loads when the MCO is in the cask are not evaluated. The cask provides the containment in these load conditions. Additionally there is a high probability of localized denting of the MCO shell where it interacts with the ring inside the cask. The localized denting in the side wall will give stresses beyond those acceptable for Service Level D. However, due to the high elongation of the material and the limited amount of distortion (thickness of the ring), no expected breach of containment by the MCO is expected. Since this is an inward denting the circumference criteria for criticality is also not expected to be violated. For all other load conditions the criteria of Subsection NB Reference [6.2] was met. The shell is also evaluated to demonstrate that the circumference restriction for criticality control purposes is not violated for any of the load conditions.

The second set of evaluations for the loadings in Table 3 was performed for the Mark 1A baskets. In addition to meeting the criteria of Subsection NG [6.3] the criteria of maintaining geometry for criticality control in sequential loadings of first the vertical loading and then the horizontal and/or corner loadings was imposed. This evaluation is performed in Appendix 7. Both the criteria for Subsection NG and the criticality control geometry was met for all load conditions.

The evaluations demonstrates that the center tube does not move radially more than two inches. It is also demonstrated that the baskets do not deflect sufficiently to be come uncoupled allowing the fuel particles bigger than 2 mm to enter into the center void. The Mark IV baskets were not evaluated since there was no criteria.

3.19.3 Nuclear Criticality Safety

The MCO design shall achieve and maintain a critically safe array throughout the MCO design life. A criticality safety value of 0.95 for Keff shall be used for the MCO design, functions, and related activities. Per criticality analyses performed by the Buyer, this will be satisfied for MCOs containing MKIA fuel by a nominal 6.625 inch diameter void space at the longitudinal centerline of the MCO. This void space shall be maintained clear of fuel and fuel fragments larger than 2 mm spheres. The void space centerline shall not deviate more than two inches from the MCO centerline. The MCO shall maintain these conditions during and after being subjected to the design basis accidents described in Section 1.19.2 of Reference 6.1. MCOs containing MKIV fuel do not require this void space. Additionally, the MCO (for all fuel types) shall be capable of withstanding the effects of the DBAs outlined in Section 1.19.2 of Reference 6.1 with the maximum inside circumference not exceeding the limits allowed in Section 1.9.5 of Reference 6.1.
Refer to Section 4, Item 32.

As stated above the MCO shell is evaluated for all loadings specified in Table 3. The evaluation shows that none of the criticality criteria stated above is violated. Details can be found in Appendix 5. The Mark 1A baskets are evaluated for all applicable loads in Table 3 and are demonstrated not to violate any of the criticality control criteria stated above. The details of the Mark 1A baskets can be found in Appendix 7.

3.19.4 Over Pressure Summary of MCO Fuel Basket Functions Relief

The MCO shall relieve internal pressure in excess of its design pressure specified in Section 4.9.2, of Reference 6.1, MCO Design Criteria, both during and after being subjected to the events described in Section 4.19.2, of Reference 6.1, Design Basis Accidents. The MCO shall provide pressure relief devices imbedded in the shield plug to facilitate the configurations listed in Table 4. The pressure relief devices shall be capable of reset or replacement after performing their function. The pressure relief devices shall be selected to minimize service requirements during normal conditions. The rupture disk shall be covered with removable ¼-inch orifice plates to limit relief flow to levels acceptable to the CSB design as required. The process pressure relief valve shall be sized to accommodate a flow equal to or less than a ¼-inch diameter equivalent or the valve flow can be clamped to a ¼-inch diameter equivalent or less through an orifice or other type of device/physical feature. Selection of the process pressure relief valve shall be performed by the Buyer.

Refer to Section 4, Item 33.

Table 4. MCO Pressure Relief Configurations
(See Note 1 for Definition of Configuration Codes)

Activity	MCO Process Relief Configuration	MCO Safety Relief Configuration
Basin MCO/Cask loadout	D	D
Transport from Basin to Cold Vacuum Drying Station	D	D
Cold Vacuum Drying Station Configuration	(Note 2)	C(150)
Transport from Cold Vacuum Drying to the Canister Storage Building	B(<150)	C(150)
Canister Storage Building - MCO/Cask Receipt and transfer to service pit	B(<150)	C(150)
Canister Storage Building - MHM transfer from service pit to staging tube	B(<150)	C(150)
Canister Storage Building - Staging	B(<150)	C(150)
Canister Storage Building - MHM transfer from staging to Hot Conditioning station	B(<150)	C(150)
Hot Conditioning	(Note 3)	C(150)
Canister Storage Building - MHM transfer from Hot Conditioning to a storage tube	C(<150)	C(150)
Canister Storage Building - Interim Storage	C(<150)	C(150)

Notes: 1. MCO Relief Configurations:

A - Sealed, no relief
B - Active Pressure Relief Valve, with ¼-inch or less orifice plate (Relief Setting, psig)
C - Active Rupture Disk, with ¼-inch or less orifice plate (Relief Setting, psig)
D - Active Vent

Process relief path includes filtration to reduce economic consequences of potential relief (the internal filter described in Section 4.14 of Reference 6.1, may be used for this function). Safety relief path is unfiltered to preclude potential for relief path flow restrictions.

2. Filtered process relief path provided by the Cold Vacuum Drying offgas system via a process relief valve set to relieve at 25 psig (provided by CVD).

3. Filtered process relief path provided by the Hot Conditioning offgas system via process relief valve set to relieve at approximately 10 psig (provided by HCS).

Over pressure protection is provided for the MCO primarily by the use of a ASME Code rupture disk set at the design pressure of 150 psig. This device is located in the process valve that accesses the short process tube. It can be covered with a flange with a¼-inch diameter hole in it to provide the required flow restriction. The rupture disk can be replaced by replacing the process valve plug. The plug could then be refurbished with a new rupture disk if desired and decontamination levels permitting.

The other over pressure device is a pressure relief valve to be selected by the Buyer that will connected directly to the HEPA filter bank. This relief valve can be replaced by either an external HEPA filter or a rupture disk. Per the Specification non of these devices need to meet ASME Code criteria. In accordance with the ASME Code if they do not meet Code criteria they can not be counted on. Their presence however partially offsets the Code requirement that prevents a rupture disk from being the only pressure relief device for Subsection NB vessel. Appendix 12 provides details on the rupture disk.

3.20 Quality Assurance Requirements

All quality assurance activities shall be in accordance with 10 CFR 71, *Packaging and Transportation of Radioactive Materials* (CFR 1995), Subpart H.

A graded approach to quality assurance requirements shall be implemented in accordance with the following criteria:

- For Safety Class structures, systems and components, a comprehensive 10 CFR 71, Subpart H, program shall be applied in addition to the quality requirements from applicable industry codes and standards.

- For Safety Significant structures, systems and components, select quality requirements that would enhance the reliability of the structures, systems and components performing their safety function (if any) shall be applied in addition to the quality requirements from applicable industry codes and standards.

- For other structures, systems and components, the quality requirements from applicable industry codes and standards shall be applied.

The HNF Occurrence Reporting System shall be implemented as outlined in HNF-CM-1-5, Standard Operating Practices (HNF 1996), Section 7.1 for the design and fabrication of the MCO. The MCO fabrication specification shall require suppliers to report defects and noncompliances in items or services.

Refer to Section 4, Item 33.

A graded quality assurance approach has been implemented in the design and fabrication requirements for the MCO and its fuel baskets. Per DESH direction, a QA program viewed by DESH as equivalent to a comprehensive 10 CFR 71, Subpart H program is required for the fabrication of the safety class items that being the containment boundary items plus the Mark 1A baskets. These components, except as noted in Appendix 18, shall be in full compliance with the applicable codes which are ASME Code, Section III, Division 1, Subsection NB for the containment boundary and ASME Code, Section III, Division 1, Subsection NG for the Mark 1A baskets. Mark IV baskets can be fabricated to a lesser quality assurance program where materials are still validated to the specification and the welding is qualified to a procedures and inspected. This combined with the acceptance dimensional checks verify that the baskets will function as required and have the necessary strength to comply with ANSI N14.6 as specified. For all items documentation is required to demonstrate compliance with the requirements.

4.0 COMPLIANCE MATRIX

Design/Interface Parameter	Requirement	Source(s)	How Design Complies with P.S. Requirement
1. Design Life	Maintain fuel elements and fuel fragments for 40 years.	P.S. 4.1, Rev. 3	Material and design have no known aspects that will prevent compliance. Materials of construction were selected to resist corrosion.
2. SNF Confinement	Confine contents during all normal operations and DBAs.	P.S. 4.2, Rev. 3	Confinement is demonstrated Appendices 4, 5 and 11.
3. SNF Containment	Total gaseous leaks shall not exceed 1 x 10^{-4} SCC/sec. When sealed by welding after hot conditioning, shall be capable of not exceeding a maximum total leak rate of 1 x 10^{-7} SCC/sec.	P.S. 4.3, Rev. 3	All seals and closure are designed with capabilities of leaktightness better than 1 x10^{-4} SCC/sec. The welded portion of the containment boundary is tested to demonstrated leaktightness better than 1 x10^{-7} SCC/sec. The field closure weld is liquid penetrant inspected providing a redundant seal to the mechanical seal.
4. Maintainability	Designed to minimize the need for preventive maintenance, and allow replacement of the externally mounted pressure relief devices/HEPA filter.	P.S. 4.4, Rev. 3	No preventive maintenance is expected. The relief devices are designed to be replaced as needed.

5. Human Factors	Components shall be designed to facilitate handling and assembly with the use of appropriate handling equipment and also enable handling while wearing protective clothing used in radiation zones.	P.S. 4.5, Rev. 3	The components can be easily handled and assembled with the appropriate handling equipment.
6. Interchangability	To the maximum extent possible. (i.e., any set of like baskets can be loaded into any MCO shell, any MCO shield plug and locking ring can be used to close and seal any MCO shell, etc.).	P.S. 4.6, Rev. 3	All major components , MCO shell assembly, Shield Plug Assembly, Process valve plugs, cover caps, locking rings and all baskets are designed to be fully interchangeable.
7. Environmental Conditions	Capable of performing its mission while subjected to the environmental conditions listed in Table 3.1.	P.S. 4.7, Rev. 3	The MCO materials are fully compatible with the environmental conditions specified.
8. Transportability	Transportable by highway from the fabricator facility to the location within the Hanford site.	P.S. 4.8, Rev. 3	The dimensions of the components shown in Appendix 1 makes them all transport compatible.

9. Code Requirements	DOE Order 6430.1A; intent of ASME Boiler and Pressure Vessel Code, Section III, Subsection NB; NUREG/CR 3854, UCRL-53544.	P.S. 4.9.1, Rev. 3	The components meet the intent of the ASME Code requirements as specified. Subsection NB for Containment and Subsection NG for criticality sensitive baskets (Mark 1A)
10. Design Pressure	150 psig	P.S. 4.9.2, Rev. 3	The MCO containment is designed for a 150 psig design pressure.
11. Design Temperature	375°C	P.S. 4.9.2, Rev. 3	The MCO containment and components are designed for processing temperatures up to 375°C. See Appendix 11
12. Processing Operating Pressure	Full internal 25 psig external @ 75°C	P.S. 4.9.2, Rev. 3	The load conditions evaluated bound this condition. See Appendix 11.
13. Processing Operating Pressure	Full vacuum internal 0 psig external @ 375°C	P.S. 4.9.2, Rev. 3	The load conditions evaluated bound this condition. See Appendix 11.
14. Processing Operating Pressure	75 psig internal, 0 psig external, @ 375°C	P.S. 4.9.2, Rev. 3	The design pressure and pressure bound this condition. See Appendix 11.
15. Post Processing Operating Pressure and Temperature	150 psig internal, @ 132°C	P.S. 4.9.2, Rev. 3	The design pressure and temperature bound this condition. See Appendix 11.
16. Design Thermal Transient Under Normal Conditions	100°c/h from 20°C to 350°C, 5 thermal cycles.	P.S. 4.9.2., Rev. 3	This load condition is evaluated in Appendix 11.
17. Maximum temp gradient between MCO shell and center of shield plug.	100°C, thermal expansion 1 inch in axial direction	P.S. 4.9.2, Rev. 3	This load condition is evaluated in Appendix 11.

18. MCO Shell Design	1.49 inch Minimum between inside of MCO bottom and bottom of lowest basket.	P.S. 4.10, Rev. 3	See Appendix 1 for compliance.
19. MCO Closure Design	Final welded closure cap. Mechanical closure prior to welding cover cap in place.	P.S. 4.11, Rev. 3	See Appendix 1 for compliance
20. Fuel Basket Design	MKIA 304L or a material of equal or greater corrosion resistance properties. Service Level A requirements and Service Level D. ASME Boiler and Pressure Vessel Code, Section III, Subsection NG; NUREG/CR 3854, UCRL-53544; ANSI N14.6-1986. Capacity = 48 elements. MKIV - N14.6 for lifting capacity 54 elements. MKIA Scrap - Same as MKIA except capacity is N/A. MKIV Scrap - Same as MKIV except capacity is N/A.	P.S. 4.12, Rev. 3	See Appendix 1 for compliance with design requirements. Appendix 7 demonstrates the Mark 1A baskets capabilities to comply with the load requirements and applicable Code requirements. Appendices 8 and 9 demonstrate the capabilities of the Mark IV basket to meet the required load conditions including lifting. The capacity of the Mark IV fuel basket is 54 elements and the capacity of the Mark 1A basket is 48 elements.

21. MCO Shield Plug Design	Designed to mate with open end of the MCO shell and also mates with the end effector on the top SNF fuel basket. One inch minimum free space between the bottom of the shield plug assembly and the top of the SNF elements or fragments. Feature an integrally machined axisymmetric lifting ring with a 12 ton lifting capacity. ANSI N14.6-1986; 10 CFR 835, Subpart K; DOE Order 5480.11, Paragraph 9a; HSRCM-1, Sections 111 and 311; HNF-IP-1043, Section 8.0; and NRC Regulatory Guide 8.8, Section C.2.b, and C.2.f.	P.S. 4.13, Rev. 3	The MCO Shield Plug assembly closes the fully open MCO, provides shielding, protects the HEPA filter bank, stabilizes the top fuel basket, allows for penetrations to the filter bank the process tube and the process tubes. The features of the shield plug assembly and the clearances between the fuel and the assembly can be seen in Appendix 1. The shield plug is held in place with jacking bolts (set screws) between it and the locking ring. The locking ring has a intregal lifting ring that has in excess of a twelve ton capacity complying with ANSI N14.6 for non-critical lifts.
22. Internal Process Filter	4 internal process filters with up to 20 ft^2 of filter media for the assembly. Less than 3 micro meters in pore size. Capable of withstanding a 100 G drop without damage.	P.S. 4.14, Rev. 3	The internal process filters are specified by the buyer. Details can be found in Appendix 15. The attachment capability of the manifold to withstand a 100 g loading. (Actually the maximum loading is the 101g horizontal loading is shown in Appendix 10.
23. Design Goal MCO Weight	MCO with MKIA fuel (dry) 16175 lbs., with MKIV fuel (dry) 19142 lbs.	P.S. 4.9.3, Rev. 3	The nominal weight with shield plug and no cover, MK 1A fuel (dry is 17,248 lbs and with MKIV fuel (dry) is 19,378 lbs.

24. MCO Height	160 inches with out cap. 165.60 inches with cap.	P.S. 4.9.4, Rev. 2	As seen in Appendix 1. Maximum height without cap is 160 inches. Maximum Height with cap is 165.4 inches.
25. MCO Diameter	Nominal OD is 24". Above bottom shield plug is 25.31".	P.S. 4.9.5, Rev. 3	The nominal OD is 24 inches. Above the 148 inch elevation the maximum OD is 25.31 inches. Below 148 inches, the maximum circumference is less than 73.04.
26. Materials, Processes, and Parts	MCO shell shall be fabricated from type 304L stainless steel. All materials shall be ASME/ASTM certified materials. Ferritic steel materials shall meet the criteria of NUREG/CR-3826.	P.S. 4.15, Rev. 3	All welded components of the MCO including the shell are fabricated from 304L stainless steel. No Ferritic materials are used. All materials are designated ASME (SA) or ASTM (A) as shown in Appendix 1.
27. MCO Corrosion Control	Cleanliness during fabrication, handling, and storage. ASTM A 380-94 and ASME NQA-1. A mechanical seal is required for final closure.	P.S. 4.16, Rev. 3	Cleanliness is specified during fabrication handling , transportation and storage. This is covered in the fabrication specification and the warehouse plan Appendix 17. A mechanical closure is used for final closure.

28. Welded Joints	ASME Section III, Division 1, NB-3350. Butt welds to be ground flush to within .03 inches of base metal. All MCO pressure boundary welds and welds bearing the weight of the fully loaded MCO must be designed for and pass 100% volumetric examination per ASME requirements.	P.S. 4.17, Rev. 3	All pressure boundary welds are designed as ASME Section III Division 1, NB-3350 welds. The final closure weld produced in the field does not fully comply since it can not be volumetrically inspected. All welds are flush within 0.03 inches.
29. Decontamination Provisions	All exposed surfaces shall be smooth without cracks or crevices.	P.S. 4.18, Rev. 3	As shown in Appendix 1 all exposed surfaces are smooth and without cracks or crevices.
30. Safety Requirements	HNF-CM-4-46, Section 9.0; 10 CFR 71.73 (3); Service Level D requirements of the ASME B & PV Code, Section III, Subsection NB.	P.S. 4.19.1, Rev. 3	The components are classified in accordance with HNF-CM-4-46 and the applicable sections of the ASME Code and Service Level conditions are complied with.
31. DBA's: Fire Earthquake Drops	Temperature increase of 122°C for 180 minutes after the flow. Acceleration of CSB of .35g. See Table 3 in Section 3.19.2.	P.S. 4.19.2, Rev. 3	The conditions resulting from the fire are bounded by other cases analyzed for. The loadings for the drop conditions bound the earthquake conditions. The MCO is shown to meet the drop load conditions in Appendix 5. The Mark A baskets are shown to with stand the loadings from Table 3 of the Performance Specification in Appendix 7. Mark IV baskets are not evaluated since there is no criteria for them.

32. Criticality Safety	6.625" void space in center of MCO for MKIA baskets.		Appendix 7 demonstrates that the void space is maintained even after sequential drops of vertical and then horizontal. Appendix 5 demonstrates that the circumferential requirements are met.
33. Overpressure Relief	MCO shall relieve internal pressure.	P.S. 4.19.4, Rev. 3	Relief device features have been incorporated in the design. See Appendix 1.
34. Q.A.	10 CFR 71 Subpart H.	P.S. 5.0, Rev. 3	The fabrication specification requires a full 10 CFR 71 Subpart H program for the fabrication of the safety class items the pressure boundary components and the criticality control sensitive components, (Mark 1A baskets)

5.0 SUMMARY OF COMPLIANCE WITH REQUIREMENTS

The design of the MCO and fuel baskets is in full compliance with the requirements of the Performance Specification, Reference 6.1. The compliance is demonstrated in the design drawings shown in Appendix 1 and in the evaluation of the design to the specified requirements in Appendices 2-17.

6.0 REFERENCES

6.1 HNF-S-0426, Rev 3, Performance Specification for the Spent Nuclear Fuel Multi-Canister Overpack February 7, 1997

6.2 ASME Code, Section III, Division 1, Subsection NB, 1995 Edition, with 1995 Addenda

6.3 ASME Code, Section III, Division 1, Subsection NG, 1995 Edition with 1995 Addenda

6.4 HNF-SD-SNF—TI-015 Rev. 0, Spent Nuclear Fuel Project Technical Data book August 11, 1995

6.5 ANSI N 14.6, "Special Lifting Devices for Shipping Containers Weighing 10,000 Pounds (4500 kg) or More", 1986.

APPENDICES

Appendix 1	MCO Drawings	
Appendix 2	Material Evaluation	
Appendix 3	Weight Summary	Calculation - 01
Appendix 4	MCO Closure Bolt Preload Modeling and Response	Calculation - 02
Appendix 5	MCO Structural Drop Analysis	Calculation - 03
Appendix 6	Stress Analysis of the Lifting Cap and Canister Collar	Calculation - 04
Appendix 7	Stress Analysis of the Mark 1A Storage and Scrap Baskets	Calculation - 05
Appendix 8	Stress Analysis of the Mark IV Storage Baskets	Calculation - 06
Appendix 9	Stress Analysis of the Mark IV Scrap Basket	Calculation - 07
Appendix 10	Stress Analysis of Shield Plug Interface Components	Calculation - 08
Appendix 11	MCO Thermal Stress Evaluation	Calculation - 09
Appendix 12	Rupture Disk Data	
Appendix 13	Main Seal Data	
Appendix 14	Seal Data for Process Valve, Covers, and Filters	
Appendix 15	HEPA Filter Data	
Appendix 16	K-Basin MCO Shield Plug Thickness Technical Evaluation	
Appendix 17	Warehouse Plan	
Appendix 18	Exception Report	
Appendix 19	Fabrication Specification for Multi-Canister Overpack	

MULTI-CANISTER OVERPACK
DRAWING LIST

DRAWING	SHEET	DESCRIPTION
H-2-828041	SH. 1,2,3	MULTI-CANISTER OVERPACK ASSEMBLY
H-2-828042	SH. 1,2,3	MCO MECHANICAL CLOSURE
H-2-828043	SH. 1	MCO SHELL
H-2-828044	SH. 1	MCO SHELL BOTTOM
H-2-828045	SH. 1,2,3	MCO MECHANICAL CLOSURE SHIELD PLUG
H-2-828046	SH. 1	MCO INTERNAL FILTER GUARD
H-2-828047	SH. 1	MCO PROCESS VALVES
H-2-828048	SH. 1	MCO PROCESS PORT COVER PLATES
H-2-828049	SH. 1	MCO INTERNAL FILTER ASSEMBLY
H-2-828050	SH. 1	MCO BASKET STABILIZER EXTENSION
H-2-828051	SH. 1	MCO PROCESS TUBE
H-2-828052	SH. 1	MCO PROCESS TUBE GUIDE CONE
H-2-828053	SH. 1	MCO BASKET SUPPORT PLATE
H-2-828060	SH. 1,2,3,4,5	K BASIN SNF STORAGE BASKET MARK 1A
H-2-828065	SH. 1,2,3,4,5	K BASIN SNF SCRAP BASKET MARK 1A
H-2-828070	SH. 1,2,3	MCO MARK IV SNF STORAGE BASKET
H-2-828075	SH. 1,2	MCO MARK IV SNF SCRAP BASKET

U.S. DEPARTMENT OF ENERGY
Richland Operations Office
Duke Engineering & Services Hanford, Inc.

DRAWING INDEX

F 620108 H-2-828040 0

PARSONS I & I, INC. SCALE SHOWN

2 PLOT SCALE: 1=1

GTITLE.DWG (10/96)

DWG NO	TITLE	REF NUMBER	TITLE
		HNF-S-0453	MULTI-CANISTER OVERPACK SPECIFICATION
		H-2-828041	MULTI-CANISTER OVERPACK ASSEMBLY

DRAWING TRACEABILITY LIST — NEXT USED ON — REFERENCES — END ITEM — REVISIONS — CADFILE B828040A — CADCODE WIN95:ACD2:13.0:SS

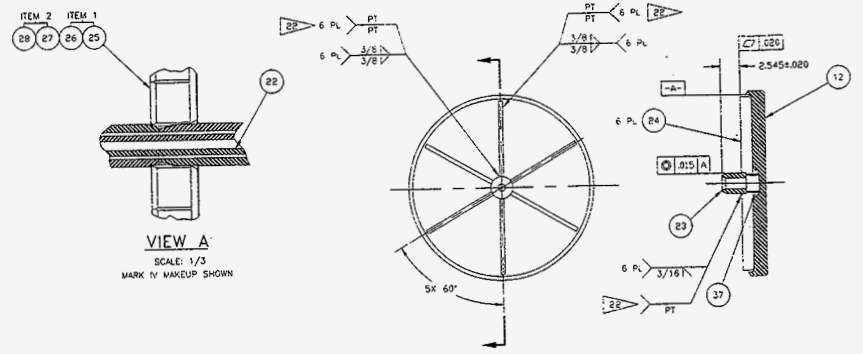

3 BOTTOM PLATE SUBASSEMBLY

SCALE: 1/6

GENERAL NOTES: (UNLESS OTHERWISE SPECIFIED)

1. ALL DIMENSIONING AND TOLERANCING ARE IN ACCORDANCE WITH ANSI Y14.5M-1982. DIMENSIONS ARE IN INCHES AND APPLY AT 72°F UNLESS OTHERWISE SPECIFIED.
2. UNSPECIFIED TOLERANCES SHALL BE:
   DECIMAL: X= ±.060, .XX= ±.030, .XXX= ±.015
   FRACTIONAL: ±1/16
   ANGULAR: ±1/2°
   ALL COAXIAL FEATURES SHALL BE CONCENTRIC WITHIN 0.003.
3. ALL UNSPECIFIED TOOL RADII SHALL BE .03 MAX.
4. SURFACE TEXTURES SYMBOLS ARE IN ACCORDANCE WITH ANSI Y14.36-78. SURFACE TEXTURE VALUES ARE IN MICROINCHES PER ANSI B46.1-85. ALL UNSPECIFIED MACHINED SURFACES SHALL BE 125 OR BETTER.
5. BREAK ALL SHARP EDGES & REMOVE ALL BURRS.
6. WELDING SYMBOLS ARE IN ACCORDANCE WITH AWS A2.4.
7. WELDING AND NDE SHALL BE IN ACCORDANCE WITH ASME B & PV CODE 1995 EDITION, SECTION III, DIVISION 1, SUBSECTION NB FOR CLASS 1 COMPONENTS. EQUIVALENT ASME CODE SECTION III, DIVISION 1, SUBSECTION NB. FULL PENETRATION WELDS AND WELD DETAILS MAY BE SUBMITTED FOR APPROVAL AND USED PENDING WRITTEN CONSENT OF THE BUYER.
8. MATERIALS, FABRICATION, WELDING AND INSPECTION SHALL BE IN ACCORDANCE WITH ASME SECTION III, DIVISION 1, SUBSECTION NB.
9. WHEN ASSEMBLED, THE TOP OF THE LOCKING & LIFTING RING (ITEM 8) SHALL BE A MINIMUM OF 1/8" BELOW THE TOP OF THE SHIELD PLUG (ITEM 13).

GENERAL NOTES CONTINUED ON SHEET 2, ZONE F4.

PARTS/MATERIAL LIST

-040	-030	-020	-010	QTY REQD	PART/DASH NUMBER	NOMENCLATURE/DESCRIPTION	MATERIAL/REFERENCE	SHEET	REV NO.
			X		-010	MULTI-CANISTER OVERPACK ASSY (MARK 1A)		1	1
		X			-020	MULTI-CANISTER OVERPACK ASSY (MARK IV)		1	2
	X			1	-030	SUBASSEMBLY, BOTTOM PLATE		1	3
X				1	-040	SUBASSEMBLY, SHIELD PLUG		2	4
									5
									6
1					H-2-828042-001	CANISTER COLLAR			7
1					H-2-828042-002	LOCKING & LIFTING RING			8
18					H-2-828042-003	SET SCREW			9
			1		H-2-828042-010	CANISTER COVER ASSEMBLY			10
			1		H-2-828043-001	SHELL			11
		1			H-2-828044-001	SHELL BOTTOM			12
1					H-2-828045-010	SHIELD PLUG ASSEMBLY			13
1					H-2-828046-001	GUARD PLATE			14
1					H-2-828046-002	GUARD PLATE RING			15
2					H-2-828047-001	PROCESS VALVE			16
1					H-2-828047-010	PROCESS VALVE/RUPTURE DISK ASSEMBLY			17
3					H-2-828048-010	4 HOLE COVER PLATE ASSEMBLY			18
1					H-2-828048-020	5 HOLE COVER PLATE ASSEMBLY			19
1					H-2-828049-001	INTERNAL HEPA FILTER ASSEMBLY			20

FOR CONTINUATION SEE SHEET 2 ZONE F2

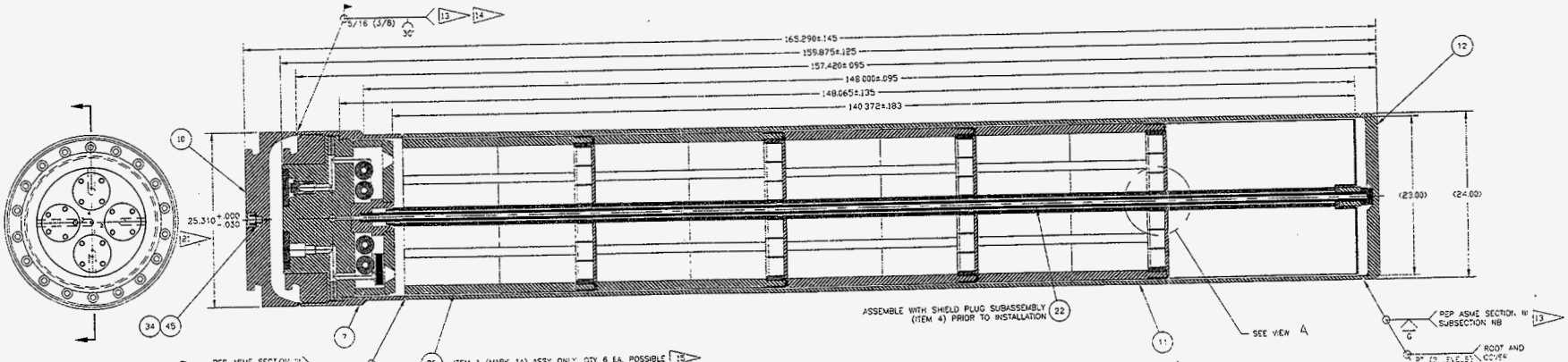

1 MULTI-CANISTER OVERPACK ASSEMBLY (MARK 1A)

SCALE: 1/6
MARK IV BASKETS SHOWN, MARK 1A BASKETS SIMILAR

2 MULTI-CANISTER OVERPACK ASSEMBLY (MARK IV)

SCALE: 1/6
MARK IV BASKETS SHOWN

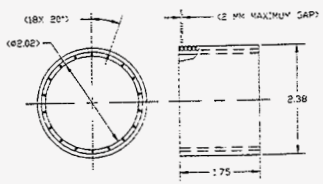

37 FILTER SCREEN

SCALE: FULL

HNF-SD-SNF-DR-003, REV. 0
APPENDIX 1
MCO DRAWINGS 1-2

U.S. DEPARTMENT OF ENERGY
Richland Operations Office
Duke Engineering & Services Hanford, Inc.

MULTI-CANISTER OVERPACK ASSEMBLY

H-2-828041 0

DRAWING TRACEABILITY LIST: DWG NO | TITLE | NEXT USED ON

H-2-828040 DRAWING INDEX: REF NUMBER | TITLE | REFERENCES | END ITEM

REVISIONS: DESCRIPTION | CADFILE B828041-2 | CADCODE WIN95-ACD2-3.0.SS

PARSONS 1 & I, N.W. | SHOWN for | SCALE: 2 PLOT SCALE. 1=1

STYLE.DWG (10/96)

(CONTINUED FROM SHEET 1 ZONE D4)

10. PROCESS PORTS ARE AS FOLLOWS:
    1. PRESSURE RELIEF VALVE/RUPTURE DISK/EXTERNAL HEPA.
    2. PROCESS PRESSURE RELIEF.
    3. LONG PROCESS TUBE.
    4. PROCESS VALVE/RUPTURE DISK.

11. ADDITIONAL FABRICATION REQUIREMENTS ARE IN HNF-S-0453, FABRICATION SPECIFICATION FOR MULTI-CANISTER OVERPACK.

12. PIECE/PART TOLERANCES ON THESE DRAWINGS SHOULD LEND TO ACCEPTABLE ASSEMBLY GEOMETRIES. ALTERNATE PIECE/PART TOLERANCES MAY BE UTILIZED WITH THE BUYER'S APPROVAL. ACCEPTABLE FINAL ASSEMBLY GEOMETRIES ARE IN THE FABRICATION SPECIFICATION'S CRITICAL DIMENSION TABLES/SKETCHES. IN THE EVENT THAT THERE IS A CONFLICT BETWEEN THE CRITICAL DIMENSION TABLES/SKETCHES AND THE DESIGN DRAWINGS, THE BUYER SHALL BE NOTIFIED FOR RESOLUTION.

13. AVOID EXCESS FILLER METAL DEPOSITION TO LIMIT DISTORTION OF THE SHELL. THE CROWN OF THE WELD SHALL BE MINIMIZED TO NOT INTERFERE WITH THE TRANSFER CASK. GRINDING IS TO BE AVOIDED WHERE POSSIBLE AND MINIMIZED WHERE REQUIRED.

14. THIS WELD IS SHOWN FOR ILLUSTRATION ONLY. CANISTER COVER (ITEM 9) WILL NOT BE WELDED TO THE MCO UNTIL AFTER HOT CONDITIONING.

PARTS/MATERIAL LIST

QTY REQD -040	-030	-020	-010	PART/DASH NUMBER	NOMENCLATURE/DESCRIPTION	MATERIAL/REFERENCE	SHEET	ITEM NO.
1				H-2-828050-001	BASKET STABILIZER EXTENSION			21
		1	1	H-2-828051-010	PROCESS TUBE			23
	1			H-2-828052-001	PROCESS TUBE GUIDE CONE			24
	6			H-2-828053-001	BASKET SUPPORT PLATE			25
		AR		H-2-828060-010	MK 1A FUEL BASKET			26
		AR		H-2-828065-010	MK 1A SCRAP BASKET			27
		AR		H-2-828070-010	MK IV FUEL BASKET			38
		AR		H-2-828075-010	MK IV SCRAP BASKET			29
								28
								30
1				-002	BUSHING	SA-479 304L SST	3	31
AR				-004	ANGLE, 2 X 2 X 1/4	SA-240 304L SST	3	32
2				-005	PLATE, 2 X 3 X 1/4	SA-240 304L SST	3	33
1				-006	RUPTURE DISK BODY	SA-479 304LN SST	3	34
								35
								36
	1				FILTER SCREEN	JOHNSON SCREENS	1	37
17 1				H-305236, REV. NC	SEAL	HELICOFLEX	2	38
1				DRG 5573	SHORT DRAIN TUBE	INDUSTRIAL SCREEN PRODUCTS	2	39
3				13632	SEAL	EG&G PRESSURE SCIENCE	2	40
1					RELIEF VALVE	SPECIFIED BY BUYER		41
1					RUPTURE DISK		3	42
22 1				013-1	HEPA FILTER, DRUM VENT (PROVIDED BY BUYER)	NUCLEAR FILTER TECHNOLOGY, INC.	2	43
1				801A91-0004-A	SEAL	EG&G PRESSURE SCIENCE	2	44
1				801A91-0012-A	SEAL	EG&G PRESSURE SCIENCE	2	45

15. MARK 1A ASSY -010 (ITEM 1), CAN HAVE 6 MARK 1A FUEL BASKET ASSEMBLIES (ITEM 25) OR 5 MARK 1A FUEL BASKET ASSEMBLIES (ITEM 25) WITH 1 MARK 1A SCRAP BASKET ASSEMBLY (ITEM 26). THE SCRAP BASKET ASSEMBLY CAN BE PLACED ON THE TOP OR BOTTOM OF THE BASKET STACK.

16. MARK IV ASSY -020 (ITEM 2), CAN HAVE 5 MARK IV FUEL BASKET ASSEMBLIES (ITEM 27) OR 4 MARK IV FUEL BASKET ASSEMBLIES (ITEM 27) WITH 1 MARK IV SCRAP BASKET ASSEMBLY (ITEM 28). THE SCRAP BASKET ASSEMBLY CAN BE PLACED ON THE TOP OR BOTTOM OF THE BASKET STACK.

17. SEAL RETAINING SCREWS AND CLIPS ARE SUPPLIED WITH SEAL (ITEM 38).

18. TAKE SPECIAL CARE TO ENSURE THAT THREADS ARE SCRUPULOUSLY CLEAN AND FREE OF BURRS. COAT INTERNAL AND EXTERNAL THREADS WITH A NUCLEAR GRADE THREAD LUBRICANT. LUBRICANTS SHALL HAVE A SERVICE TEMPERATURE ABOVE 700°F AND MUST NOT HAVE ANY GAS PRODUCING AGENTS WHEN HEATED ABOVE 450°F. ALL LUBRICANTS SHALL BE APPROVED BY BUYER.

19. WHEN THREADING LOCKING RING INTO COLLAR, USE A LOAD CELL ON A HOISTING DEVICE OR COUNTERWEIGHTS TO ASSIST IN LOAD CELL ON A HOISTING DEVICE OR COUNTERWEIGHTS TO ASSIST IN KEEPING WEIGHT OFF OF THREADS. UPON ASSEMBLY, THE LOCKING RING (ITEM 8) SHALL BE A MINIMUM OF 1/8" BELOW THE TOP OF THE SHIELD PLUG (ITEM 13).

20. RUPTURE DISK MUST MEET ASME B & PV CODE, SECTION III, DIVISION 1, SUBSECTION NB. DISK MUST BE CERTIFIED TO 150 PSIG BURST PRESSURE AT 300°C, AND CAPABLE OF WITHSTANDING 75 PSIG AT 375°C Ø1.00 NOMINAL, Ø1.365 OD OF LIP.

21. OUTSIDE DIAMETER AND STRAIGHTNESS ACROSS CANISTER COLLAR AND CANISTER COVER SHALL BE WITHIN A Ø25.310 ENVELOPE.

22. USE WATER WASHABLE DYE PENETRANT FOR WELD INSPECTIONS.

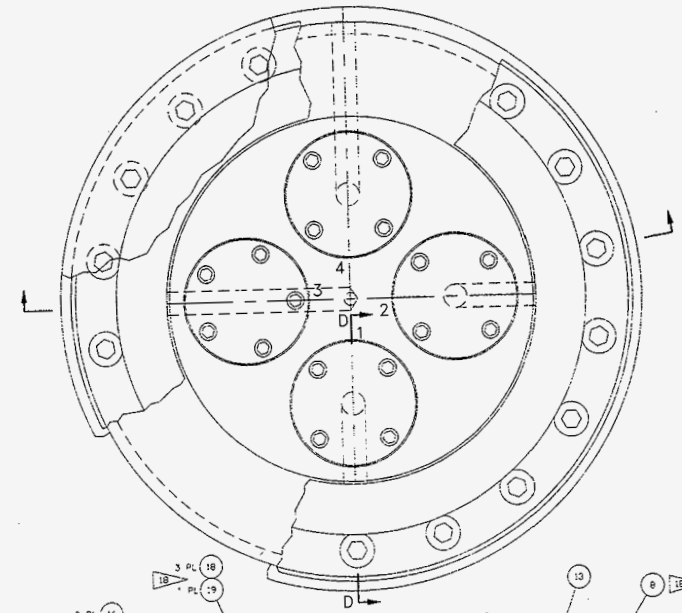

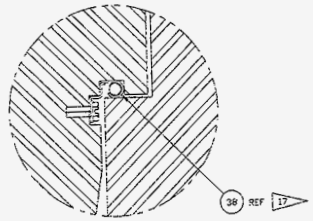

VIEW F
SCALE: 2/1

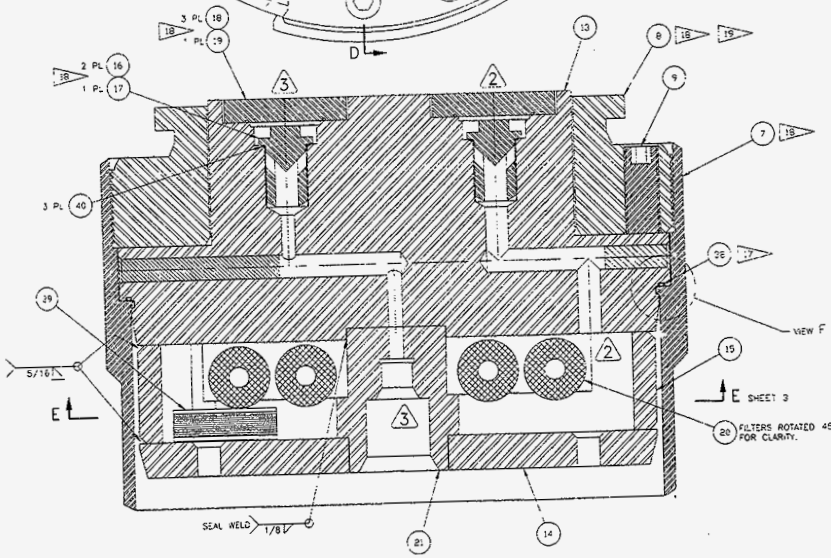

4 SHIELD PLUG SUBASSEMBLY
SCALE: 1/2

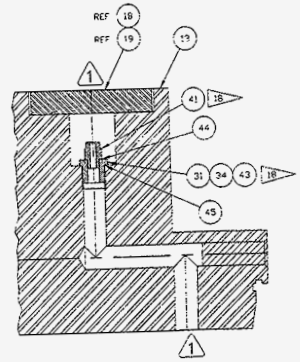

SECTION D-D
SCALE: 1/2

DWG NO	TITLE	REF NUMBER	TITLE	REFERENCES	END ITEM	CADFILE	9828041B
DRAWING TRACEABILITY LIST		NEXT USED ON					

H-2-828040 DRAWING INDEX

REVISIONS

LTR	DESCRIPTION	DWN	DATE

CADCODE WIN95:ACD2:13.0:SS

DESIGN AGENT PARSONS I & T, INC. NONE SHOWN

DRAWN BT BECKER 5-11-97

CHECKED

ENGR APPR

MFG APPR

QA APPR

COMMENTS

COMMENTS

2 PLOT SCALE: 1=1

3 SCNTLE.DWG (10/96)

HNF-SD-SNF-DR-003, REV. 0
APPENDIX 1
MCO DRAWINGS 1-3

U.S. DEPARTMENT OF ENERGY
Richland Operations Office
Duke Engineering & Services Hanford, Inc.

MULTI-CANISTER OVERPACK ASSEMBLY

F 620108 H-2-828041 0

SHEET 2

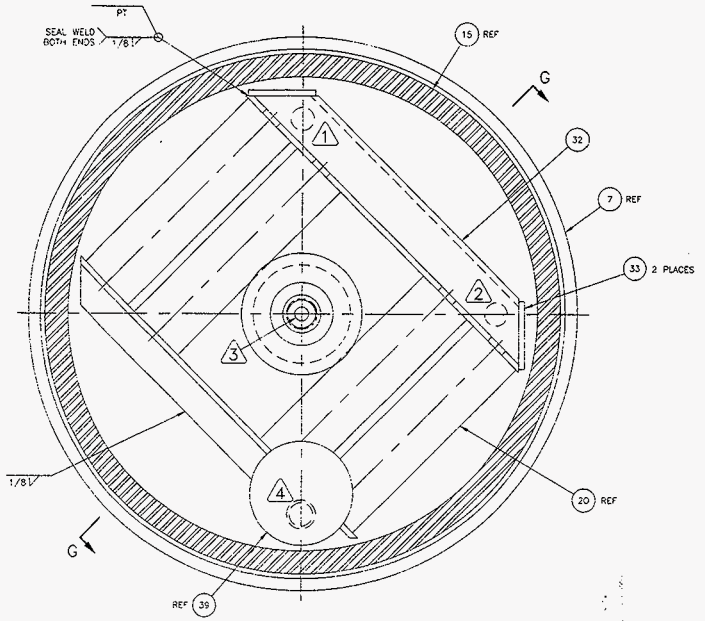

SECTION E-E SHEET 2
SCALE: 1/2

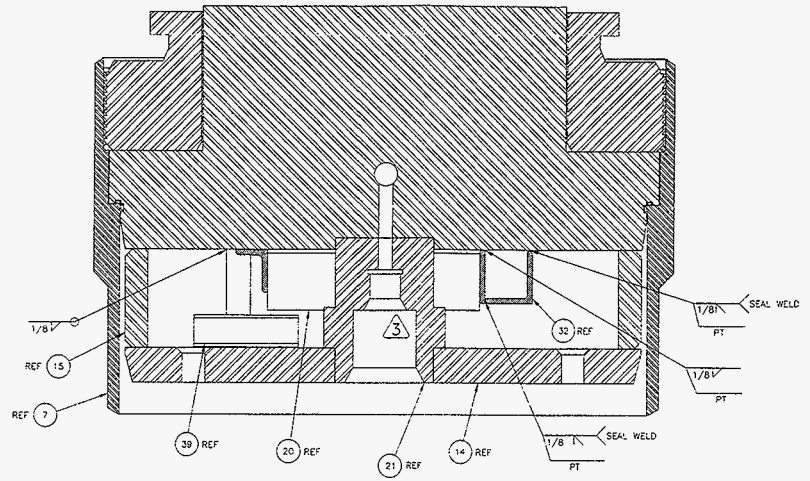

SECTION G-G
SCALE: 1/2
ROTATED 45° CW

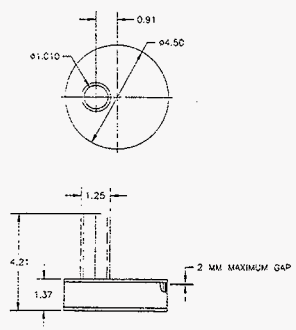

39 SHORT DRAW TUBE
SCALE: 1/2

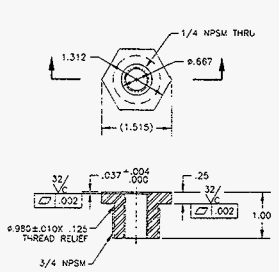

1 BUSHING
SCALE: 1/1

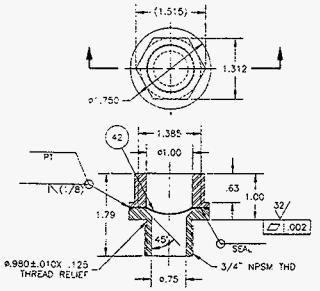

34 RUPTURE DISK
SCALE: 1/1

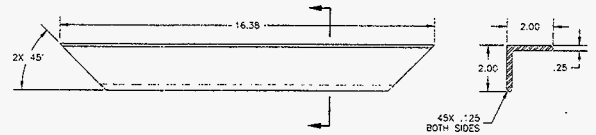

32 ANGLE

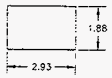

33 END PLATE

FOR GENERAL NOTES AND PARTS LIST SEE SH.1

HNF-SD-SNF-DR-003, REV. 0
APPENDIX 1
MCO DRAWINGS 1-4

U.S. DEPARTMENT OF ENERGY
Richland Operations Office
Duke Engineering & Services Hanford, Inc.

MULTI-CANISTER OVERPACK ASSEMBLY

DWG NO	TITLE	REF NUMBER	TITLE
		H-2-828040	DRAWING INDEX

DRAWING TRACEABILITY LIST — NEXT USED ON — END ITEM — REFERENCES — REVISIONS

CADFILE B828041C — CADCODE WIN95 ACD2:13.0:SS

PARSONS I & T INC. — SHOWN — 620108 — H-2-828041 — 0

2 PLOT SCALE: 1=1 — GTITLE.DWG (10/96)

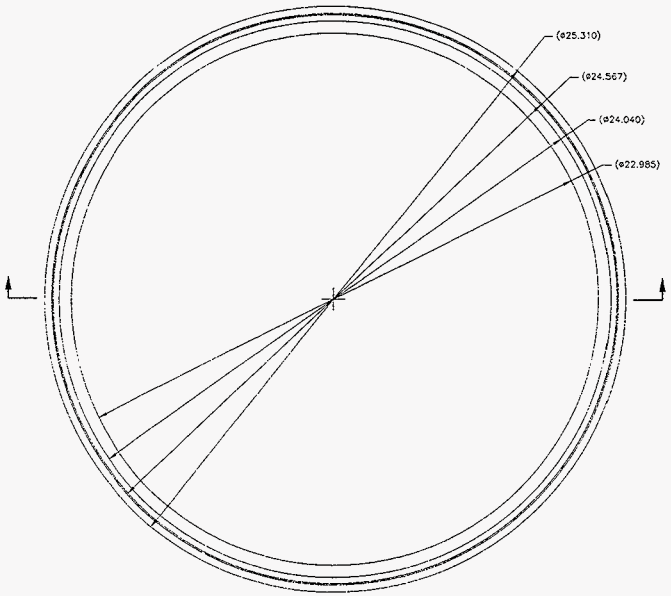

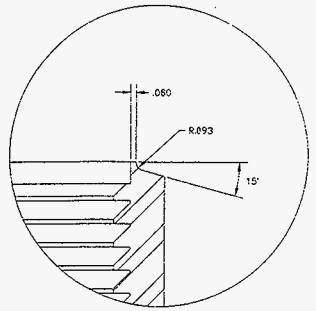

VIEW A
SCALE: 2/1 9

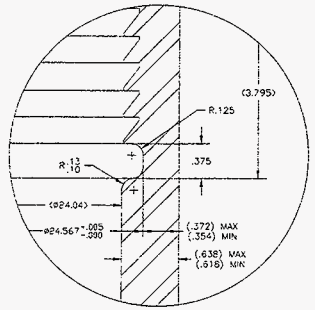

VIEW B
SCALE: 2/1

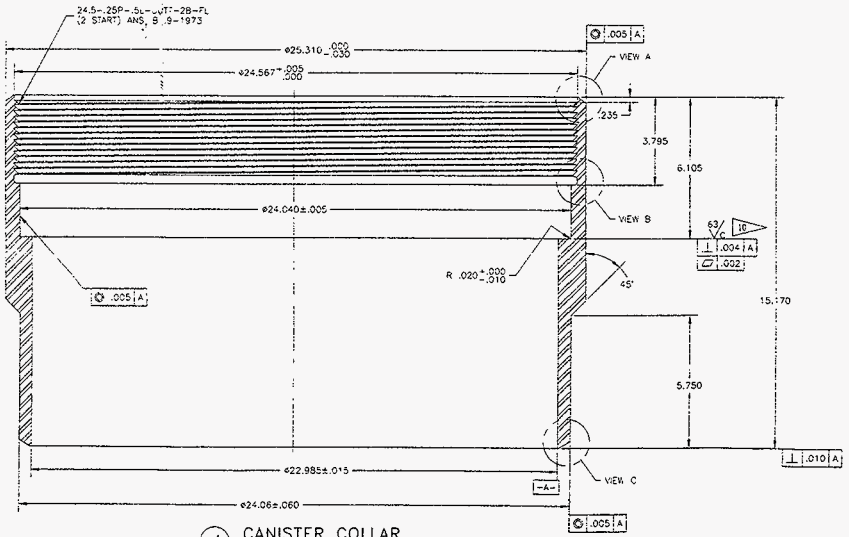

4 CANISTER COLLAR
SCALE: 1/2

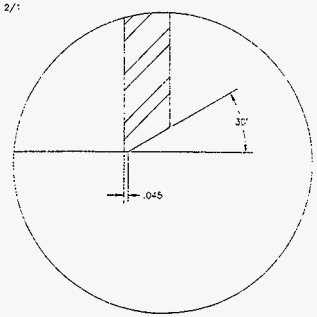

VIEW C
SCALE: 2/1 9

PARTS/MATERIAL LIST

QTY REQD -020	QTY REQD -010	PART/DASH NUMBER	NOMENCLATURE/DESCRIPTION	MATERIAL/REFERENCE	SHEET	ITEM NO
	X	-010	CANISTER COVER ASSEMBLY			1
						2
						3
		-001	CANISTER COLLAR	SA-182 F304L	2	4
		-002	LOCKING & LIFTING RING	SA-182 F304N	1	5
		-003	SET SCREW, 1 1/2- 8 UN- 2A	SA-193 GR B8M	2	6
	1	-004	CANISTER COVER	SA-182 F304L	3	7
	1	-005	COVER PLATE, BLIND	SA-182 F304L	3	8

GENERAL NOTES: (UNLESS OTHERWISE SPECIFIED)

1. ALL DIMENSIONS ARE IN INCHES. DIMENSIONING AND TOLERANCING PER ANSI Y14.5M 1982. TOLERANCES: DECIMAL: .X= ±.060
   .XX= ±.030
   .XXX= ±.015
   FRACTIONAL: ±1/16
   ANGULAR: ±1/2°
   ALL COAXIAL FEATURES SHALL BE CONCENTRIC WITHIN ø.003.
2. MACHINED FILLET RADII SHALL BE .03 MAX.
3. ALL MACHINED SURFACES SHALL BE 125√ PER ANSI B46.1
4. BREAK ALL SHARP EDGES & REMOVE ALL BURRS.
5. MATERIALS FABRICATION, WELDING AND INSPECTION SHALL BE IN ACCORDANCE WITH ASME SECTION III, DIVISION 1, SUBSECTION NB.
6. ADDITIONAL FABRICATION REQUIREMENTS ARE IN HNF-S-0453, FABRICATION SPECIFICATION FOR MULTI-CANISTER OVERPACK.
7. PIECE / PART TOLERANCES ON THESE DRAWINGS SHOULD LEND TO ACCEPTABLE ASSEMBLY GEOMETRIES. ALTERNATE PIECE / PART TOLERANCES MAY BE UTILIZED WITH THE BUYER'S APPROVAL. ACCEPTABLE FINAL ASSEMBLY GEOMETRIES ARE SHOWN IN THE FABRICATION SPECIFICATION'S CRITICAL DIMENSION TABLES / SKETCHES. IN THE EVENT THAT THERE IS A CONFLICT BETWEEN THE CRITICAL DIMENSION TABLES / SKETCHES AND THE DESIGN DRAWINGS, THE BUYER SHALL BE NOTIFIED FOR RESOLUTION.

6 DRILL AND TAP FROM UNDERSIDE OF LOCKING & LIFTING RING.

9 EQUIVALENT ASME CODE SECTION III, DIVISION 1, SUBSECTION NB WELD DETAILS MAY BE SUBMITTED FOR APPROVAL.

10 THE SEALING FACE MUST BE LATHE TURNED. THE USE OF EMERY CLOTH IS LIMITED TO TOUCHING UP MINOR ACCIDENTAL DEFECTS AND MUST BE PERFORMED BY RUBBING IN LINE WITH THE LAY OF THE TOOL MARKS.

HNF-SD-SNF-DR-003, REV. 0
APPENDIX 1
MCO DRAWINGS 1-5

DWG NO	TITLE	REF NUMBER	TITLE
		H-2-828045	MCO SHIELD PLUG
		H-2-828043	MCO SHELL

DRAWING TRACEABILITY LIST — NEXT USED ON H-2-828041 — REFERENCES — REVISIONS — CADFILE 8828042A — CADCODE WIN95:ACD2:13.0:SS

BT BECKER — U.S. DEPARTMENT OF ENERGY
Richland Operations Office
Duke Engineering & Services Hanford, Inc.

MCO MECHANICAL CLOSURE

620108 H-2-828042 0

PARSONS & T INC — SCALE SHOWN — SHEET 1 OF 3

2 PLOT SCALE: 1=1 — GTITLE.DWG (10/96)

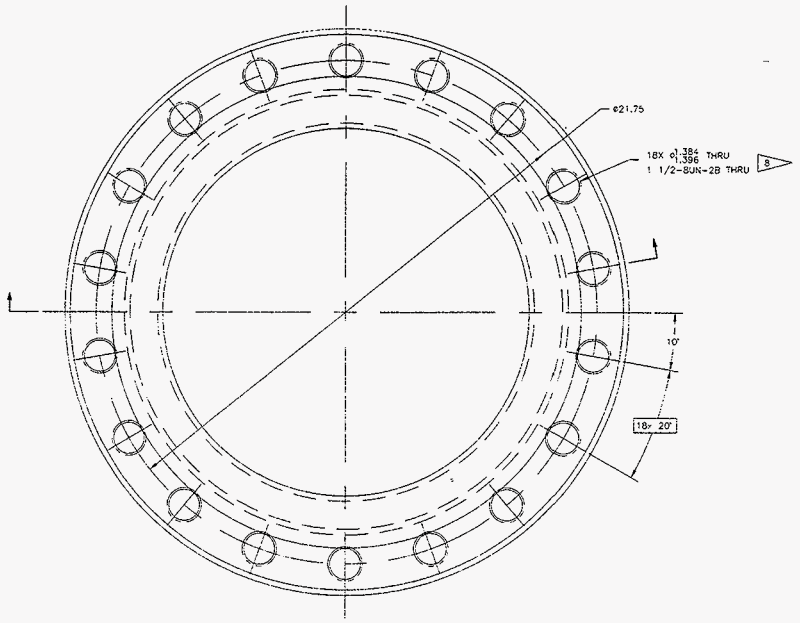

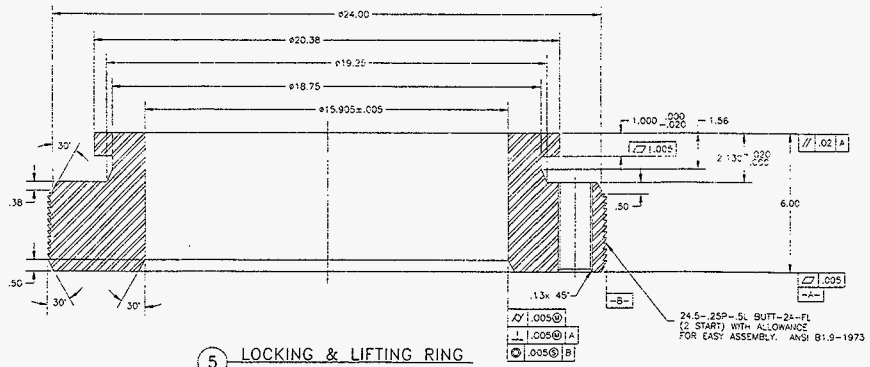

5 LOCKING & LIFTING RING

PARTIALLY ROTATED 10° CW
SCALE: 1/2

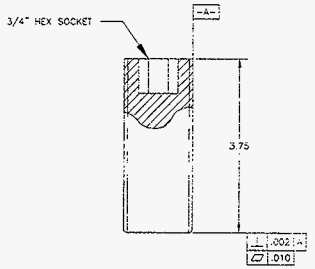

6 SET SCREW

FOR GENERAL NOTES AND PARTS LIST SEE SHEET 1.

HNF-SD-SNF-DR-003, REV. 0
APPENDIX 1
MCO DRAWINGS 1-6

DWG NO	TITLE	REF NUMBER	TITLE
		H-2-828045	MCO SHIELD PLUG

DRAWING TRACEABILITY LIST — REFERENCES — NEXT USED ON H-2-828041 — REVISIONS — CADFILE B828042B — CADCODE WIN95:ACD2:13.0:SS

BT BECKER

U.S. DEPARTMENT OF ENERGY
Richland Operations Office
Duke Engineering & Services Hanford, Inc.

MCO MECHANICAL CLOSURE

F620108 H-2-828042 0

PARSONS I & T, INC. SHOWN SHEET 2 OF

2 PLOT SCALE: 1=1

GTITLE.DWG (10/96)

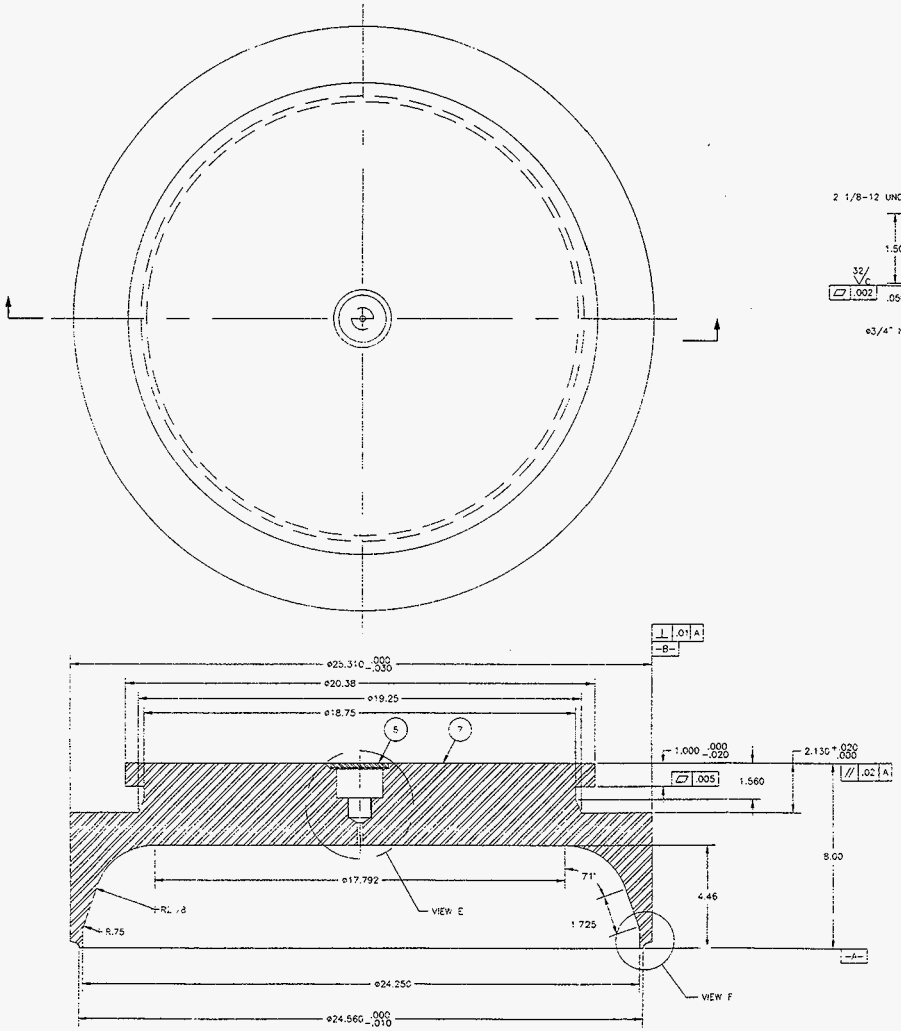

1 CANISTER COVER ASSEMBLY
SCALE: 1/2

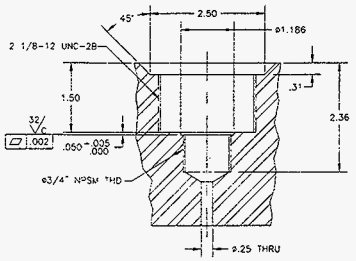

VIEW E
SCALE: 1/1
COVER PLATE REMOVED FOR CLARITY

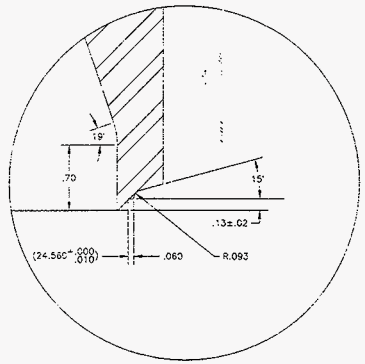

VIEW F
SCALE: 2/1

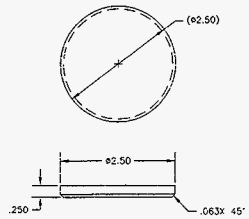

8 COVER PLATE
SCALE: 1/1

FOR GENERAL NOTES AND PARTS LIST SEE SHEET 1.

HNF-SD-SNF-DR-003, REV. 0
APPENDIX 1
MCO DRAWINGS 1-7

U.S. DEPARTMENT OF ENERGY
Richland Operations Office
Duke Engineering & Services Hanford, Inc

MCO MECHANICAL CLOSURE

BT BECKER

F 620108 H-2-828042 0

DWG NO	TITLE	REF NUMBER	TITLE
DRAWING TRACEABILITY LIST		NEXT USED ON	REFERENCES H-2-828041

REVISIONS
CADFILE B828042C CADCODE WIN95:4CD2:13.0:SS

PARSONS : & T, INC. SHOWN
2 PLOT SCALE: 1=1
GTITLE.DWG (10/96)

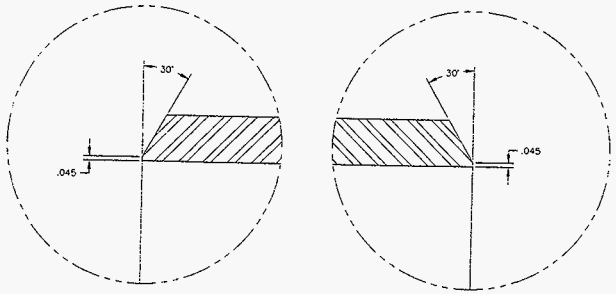

VIEW B
SCALE: 2/1

VIEW C
SCALE: 2/1

GENERAL NOTES: (UNLESS OTHERWISE SPECIFIED)

1. ALL DIMENSIONS ARE IN INCHES. DIMENSIONING AND TOLERANCING PER ANSI Y14.5M 1982. TOLERANCES: DECIMAL: .X= ±.060
   .XX= ±.030
   .XXX= ±.015
   FRACTIONAL: ±1/16
   ANGULAR: ±1/2°
2. MACHINED FILLET RADII SHALL BE .03 MAX.
3. ALL MACHINED SURFACES SHALL BE 125/ PER ANSI B46.1.
4. BREAK ALL SHARP EDGES & REMOVE ALL BURRS.
5. MATERIAL FABRICATION, WELDING AND INSPECTION SHALL BE IN ACCORDANCE WITH ASME SECTION III, DIVISION 1, SUBSECTION NB. ALL EXTERIOR SURFACES SHALL BE GROUND FLUSH WITH FINISH AS NOTED. WELD MAY NOT PROTRUDE INSIDE SHELL.
6. ADDITIONAL FABRICATION REQUIREMENTS ARE IN HNF-S-0453, FABRICATION SPECIFICATION FOR MULTI-CANISTER OVERPACK.
7. PIECE / PART TOLERANCES ON THESE DRAWINGS SHOULD LEND TO ACCEPTABLE ASSEMBLY GEOMETRIES. ALTERNATE PIECE / PART TOLERANCES MAY BE UTILIZED WITH THE BUYER'S APPROVAL. ACCEPTABLE FINAL ASSEMBLY GEOMETRIES ARE SHOWN IN THE FABRICATION SPECIFICATION'S CRITICAL DIMENSION TABLES / SKETCHES. IN THE EVENT THAT THERE IS A CONFLICT BETWEEN THE CRITICAL DIMENSION TABLES / SKETCHES AND THE DESIGN DRAWINGS, THE BUYER SHALL BE NOTIFIED FOR RESOLUTION.
8. ALL DIMENSIONS ARE APPLICABLE AT 72° F AND ALL TOLERANCING APPLIES AFTER WELDING AND FINAL MACHINING.

9 SHELL SHALL BE MANUFACTURED FROM 304L SST WITH PROPERTIES OF 304 SST:
- MINIMUM YIELD STRENGTH OF 30 KSI @ 70°F.
- MINIMUM TENSILE STRENGTH OF 75 KSI @ 70°F.

SHELL MAY BE EITHER WELDED OR SEAMLESS SA-312 PIPE AS INDICATED IN PARTS LIST OR FABRICATED FROM PLATE, ASME SA-240, TYPE 304L WITH ONE LONGITUDINAL WELD. LONGITUDINAL WELD FOR FABRICATED SHELL IS SHOWN IN SECTION A-A.

10 EQUIVALENT FULL PENETRATION ASME SECTION III, DIVISION 1, SUBSECTION NB WELD DETAILS MAY BE SUBMITTED FOR APPROVAL.

11 EXTERNAL OVALITY SHALL NOT EXCEED 24.120" AS MEASURED WITH A RING GUAGE MINIMUM LENGTH 4.030".

12 OUTSIDE DIAMETER AND STRAIGHTNESS TO COLLAR'S 45° SHOULDER SHALL ALLOW INSERTION INTO A GAGE ø24.940 INSIDE DIAMETER AND 149" LONG.

13 INSIDE DIAMETER AND INTERNAL STRAIGHTNESS SHALL BE VERIFIED BY PASSING A GAGE WITH MINIMUM O.D. 22.750" AND MINIMUM LENGTH 28" THROUGH THE INSIDE OF THE SHELL.

PARTS/MATERIAL LIST					
QTY REQD -1020 -1015	PART/DASH NUMBER	NOMENCLATURE / DESCRIPTION	MATERIAL / REFERENCE	SHEET	REV NO
9	-001	SHELL, PIPE, 24" NPS, SCH 80S	304L SST		1

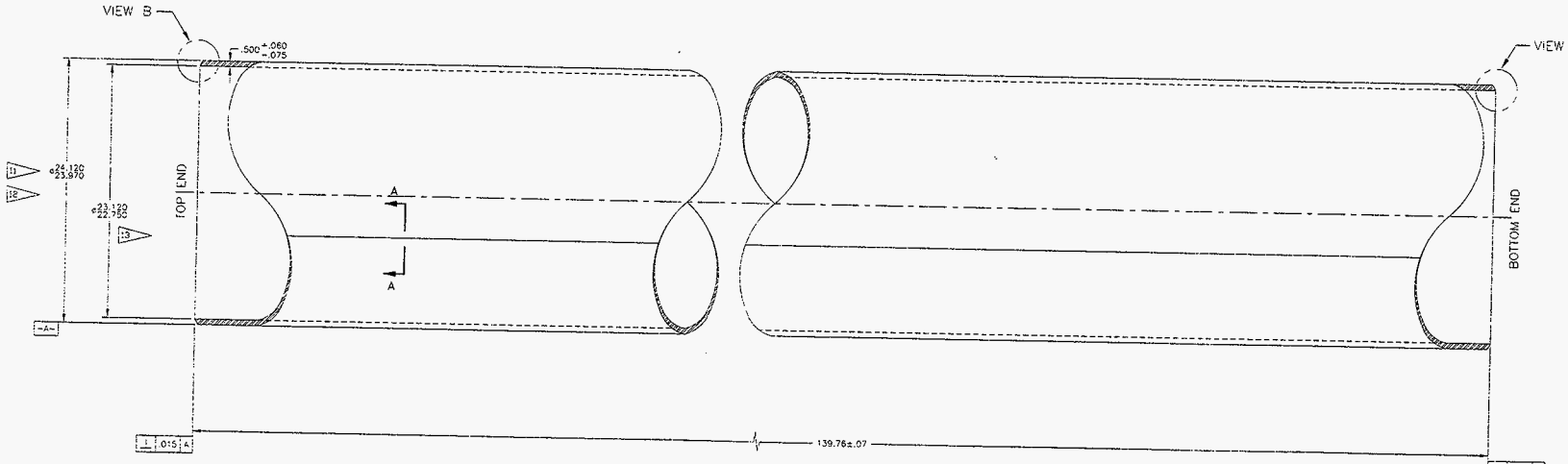

1 SHELL
SCALE: 1/4

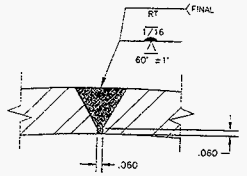

SECTION A-A LONGITUDINAL SEAM WELD
(ROTATED 90° CW)
SCALE: 2/1

9
10

HNF-SD-SNF-DR-003, REV. 0
APPENDIX 1
MCO DRAWINGS 1-8

DWG NO	TITLE	REF NUMBER	TITLE
		H-2-828044	MCO SHELL BOTTOM
		H-2-828042	MCO MECHANICAL CLOSURE

DRAWING TRACEABILITY LIST — REFERENCES — NEXT USED ON H-2-828041

REVISIONS — CADFILE B828043A — CADCODE WIN95-4CD2:13.0:SS

BT BECKER

U.S. DEPARTMENT OF ENERGY
Richland Operations Office
Duke Engineering & Services Hanford, Inc

MCO SHELL

F 620108 H-2-828043 0

PARSONS I & T, INC. SCALE SHOWN SHEET 1 OF 1

2 PLOT SCALE: 1=1

STITLE.DWG (10/96)

PARTS/MATERIAL LIST						
QTY REQD -020	-010	PART/DASH NUMBER	NOMENCLATURE/DESCRIPTION	MATERIAL/REFERENCE	SHEET	ITEM NO.
		-001	SHELL BOTTOM	SA 182 F304L SST	1	1

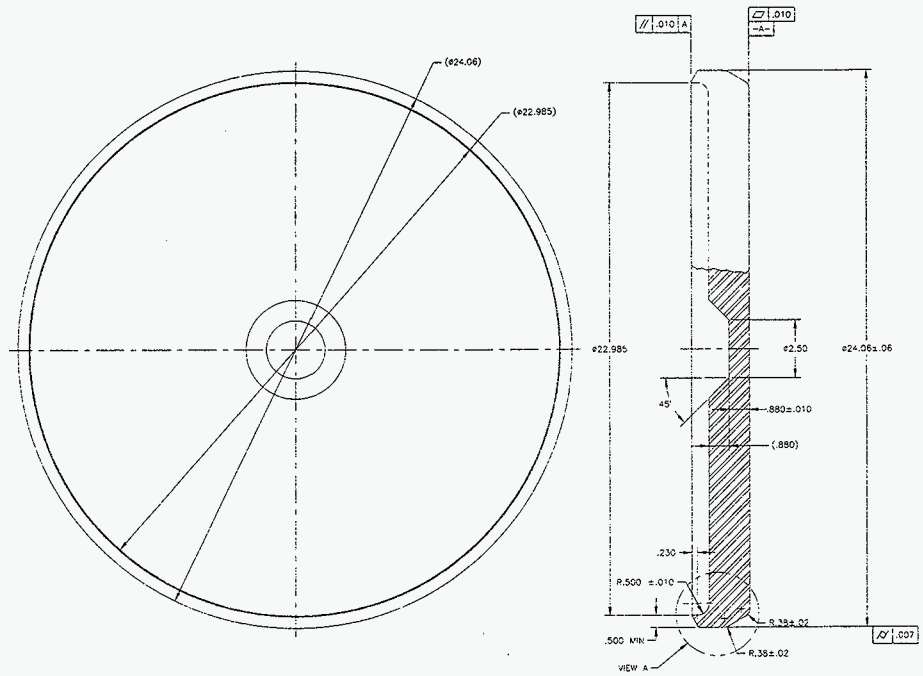

1 SHELL BOTTOM
SCALE: 1/2

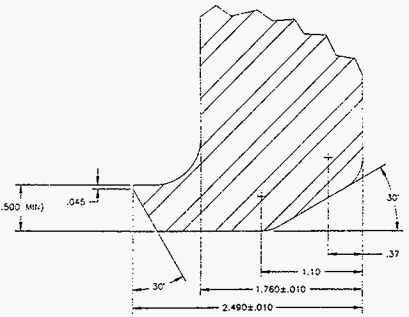

VIEW A
SCALE: 2/1

GENERAL NOTES: (UNLESS OTHERWISE SPECIFIED)

1. ALL DIMENSIONS ARE IN INCHES. DIMENSIONG AND TOLERANCING PER ANSI Y14.5M 1982. TOLERANCES: DECIMAL: .X= ±.060
   .XX= ±.030
   .XXX= ±.015
   FRACTIONAL: ±1/16
   ANGULAR: ±1/2°
2. MACHINED FILLET RADII SHALL BE .03 MAX.
3. ALL MACHINED SURFACES SHALL BE 125√ PER ANSI B46.1.
4. BREAK ALL SHARP EDGES & REMOVE ALL BURRS.
5. MATERIAL, FABRICATION, WELDING AND INSPECTION SHALL BE IN ACCORDANCE WITH ASME SECTION II, DIVISION 1, SUBSECTION NB.
6. ADDITIONAL FABRICATION REQUIREMENTS ARE IN HNF-S-0453, FABRICATION SPECIFICATION FOR MULTI-CANISTER OVERPACK.
7. PIECE / PART TOLERANCES ON THESE DRAWINGS SHOULD LEND TO ACCEPTABLE ASSEMBLY GEOMETRIES. ALTERNATE PIECE / PART TOLERANCES MAY BE UTILIZED WITH THE BUYER'S APPROVAL. ACCEPTABLE FINAL ASSEMBLY GEOMETRIES ARE SHOWN IN THE FABRICATION SPECIFICATION'S CRITICAL DIMENSION TABLES / SKETCHES. IN THE EVENT THAT THERE IS A CONFLICT BETWEEN THE CRITICAL DIMENSION TABLES / SKETCHES AND THE DESIGN DRAWINGS, THE BUYER SHALL BE NOTIFIED FOR RESOLUTION.

HNF-SD-SNF-DR-003, REV. 0
APPENDIX 1
MCO DRAWINGS 1-9

DWG NO	TITLE	REF NUMBER	TITLE
		H-2-828052	MCO DIP TUBE GUIDE CONE
		H-2-828043	MCO SHELL FOR MECHANICAL CLOSURE
		H-2-828053	MCO BASKET SUPPORT PLATE

DRAWING TRACEABILITY LIST — REFERENCES — NEXT USED ON H-2-828041 — REVISIONS — CADFILE B828044A — CADCODE WIN95:ACD2:13.0:SS

BT BECKER — U.S. DEPARTMENT OF ENERGY
Richland Operations Office
Duke Engineering & Services Hanford, Inc.

MCO SHELL BOTTOM

F 620108 H-2-828044 0

PARSONS T & T, INC. SHOWN 1 of 1

2 PLOT SCALE: 1=1 — CTITLE.DWG (10/96)

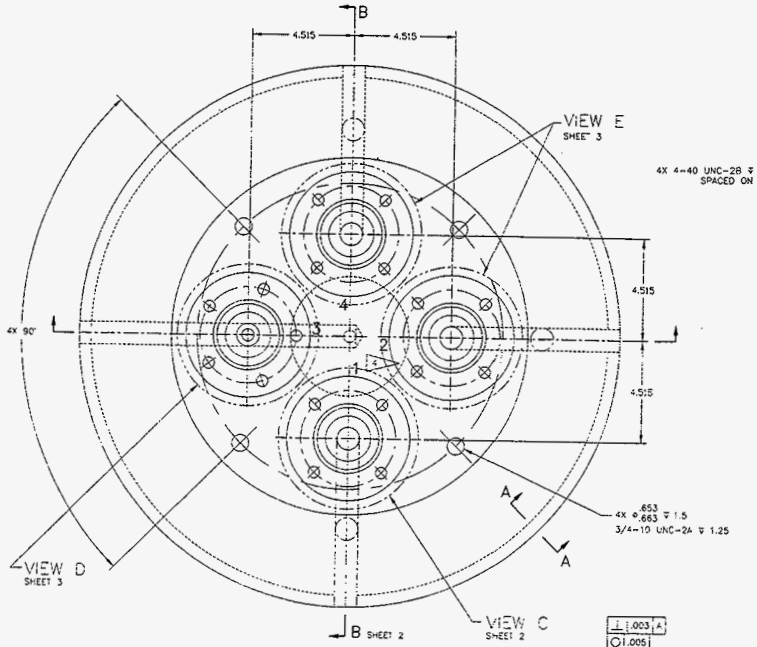

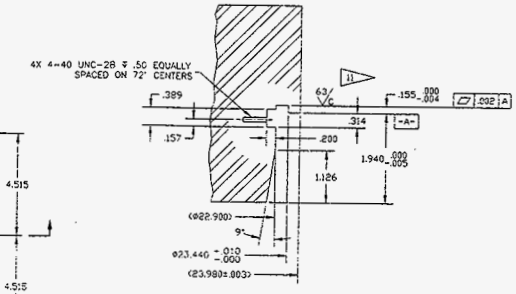

SECTION A-A
ROTATED 45° CCW
SCALE: FULL

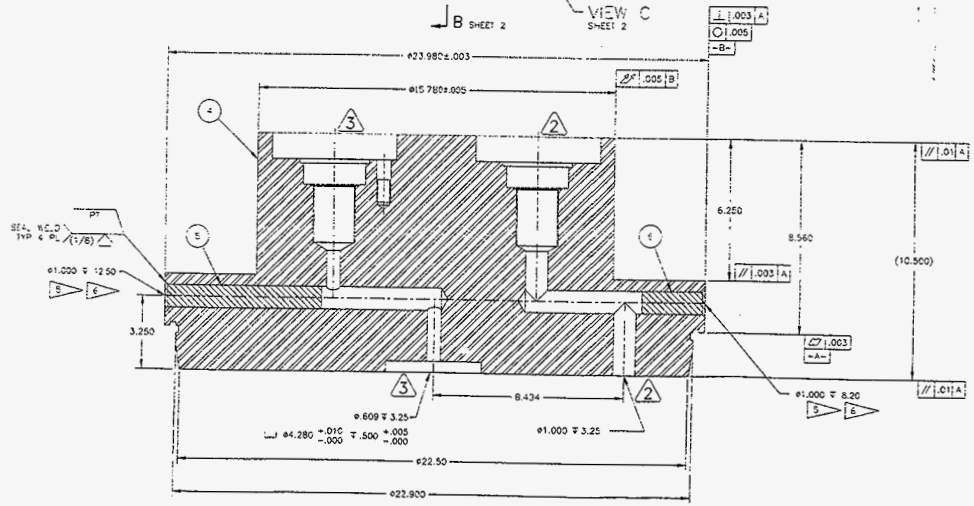

1 SHIELD PLUG ASSEMBLY
SCALE: 1/2

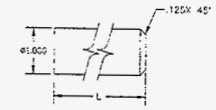

5 6 7 PLUG
SCALE: FULL

PARTS/MATERIAL LIST

.07 BEND -020	.07 BEND -010	PART/DASH NUMBER	NOMENCLATURE / DESCRIPTION	MATERIAL/REFERENCE	SHEET	ITEM NO.
	X	-010	SHIELD PLUG ASSEMBLY			1
						2
						3
	1	-001	SHIELD PLUG	SA 182 F304L SST	1	4
	1	-002	PLUG, Ø1.00X 6.9 L		1	5
	2	-003	PLUG, Ø1.00X 2.7 L		1	6
	1	-004	PLUG, Ø1.00X 2.0 L		1	7

GENERAL NOTES: (UNLESS OTHERWISE SPECIFIED)

1. ALL DIMENSIONS ARE IN INCHES. DIMENSIONING AND TOLERANCING PER ANSI Y14.5M 1982. TOLERANCES: DECIMAL .X± ±.060
   .XX± ±.030
   .XXX± ±.015
   ANGLES: ±1/2°
   ALL COAXIAL FEATURES SHALL BE CONCENTRIC WITHIN Ø.003.
2. REMOVE ALL BURRS. BREAK SHARP EDGES.
3. ALL MACHINED SURFACES SHALL BE 125√ OR BETTER PER ANSI B46.1.
4. IDENTIFY PER FABRICATION SPECIFICATION HNF-S-0453 IN APPROXIMATE LOCATION SHOWN.
5. FABRICATOR MAY USE DOWEL OR THREADED PLUG PER SA-240 OR SA-479 304L STAINLESS STEEL TO FACILITATE WELD. IF DOWEL IS USED, MATE PARTS IN ACCORDANCE WITH A LC4 CLEARANCE LOCATIONAL FIT, ANSI B4.1-1967, R1987.
6. COUNTERSINK AS REQUIRED FOR .125 MIN WELD PREP.
7. MATERIALS, FABRICATION, WELDING AND INSPECTION SHALL BE IN ACCORDANCE WITH ASME SECTION III, DIVISION 1, SUBSECTION NB.
8. ADDITIONAL FABRICATION REQUIREMENTS ARE IN HNF-S-0453, FABRICATION SPECIFICATION FOR MULTI-CANISTER OVERPACK.
9. PIECE / PART TOLERANCES ON THESE DRAWINGS SHOULD LEND TO ACCEPTABLE ASSEMBLY GEOMETRIES. ALTERNATE PIECE / PART TOLERANCES MAY BE UTILIZED WITH THE BUYER'S APPROVAL. ACCEPTABLE FINAL ASSEMBLY GEOMETRIES ARE SHOWN IN THE FABRICATION SPECIFICATION'S CRITICAL DIMENSION TABLES / SKETCHES. IN THE EVENT THAT THERE IS A CONFLICT BETWEEN THE CRITICAL DIMENSION TABLES / SKETCHES AND THE DESIGN DRAWINGS, THE BUYER SHALL BE NOTIFIED FOR RESOLUTION.
10. PROCESS PORTS ARE AS FOLLOWS:
    1. PRESSURE RELIEF VALVE/RUPTURE DISK/EXTERNAL HEPA FILTER.
    2. PROCESS PRESSURE RELIEF
    3. LONG PROCESS TUBE.
    4. PROCESS VALVE/RUPTURE DISK.
11. THE SEALING FACE MUST BE LATHE TURNED. THE USE OF EMERY CLOTH IS LIMITED TO TOUCHING UP MINOR ACCIDENTAL DEFECTS AND MUST BE PERFORMED BY RUBBING IN LINE WITH THE LAY OF THE TOOL MARKS.
12. DRILL, TAP AND COUNTER BORE DEPTHS AS WELL AS PROJECTED TOLERENCING ARE REFERENCED FROM DATUM PLANE "C".

DRAWING TRACEABILITY LIST			
DWG NO	TITLE	REFERENCES	
		REF. NUMBER	TITLE
		NEXT USED ON	H-2-828041
H-2-828042	MECHANICAL CLOSURE ASSY		
H-2-828046	GUARD PLATE AND RING		
H-2-828047	PROCESS VALVES		
H-2-828048	PROCESS PORT FLANGES		
H-2-828049	INTERNAL FILTER ASSY		
H-2-828050	BASKET STABILIZER EXTENSION		

REVISIONS					
	DESCRIPTION	ECN	DATE	CHECKED	APPROVED
CADFILE	8828045A	CADCODE	WIN95:AC02-13.0-SS		

HNF-SD-SNF-DR-003, REV. 0
APPENDIX 1
MCO DRAWINGS 1-10

U.S. DEPARTMENT OF ENERGY
Richland Operations Office
Duke Engineering & Services Hanford, Inc.

MCO MECHANICAL CLOSURE SHIELD PLUG

DRAWN BY R.T. BECKER 5/23/97
DESIGN AGENT PARSONS
SHOWN 1 OF 3
SHEET 1 OF 3
DRAWING NO. H-2-828045 0
PLOT SCALE: 1=1
GTITLE.DWG (10/96)

F620108

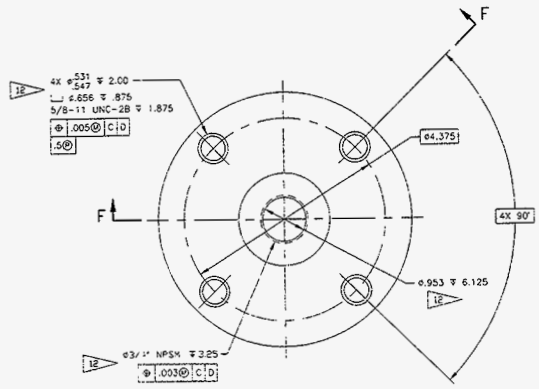

VIEW C SHEET 1
PARTIALLY ROTATED 45° CW
SCALE: FULL
1 PRESSURE RELIEF/RUPTURE DISK

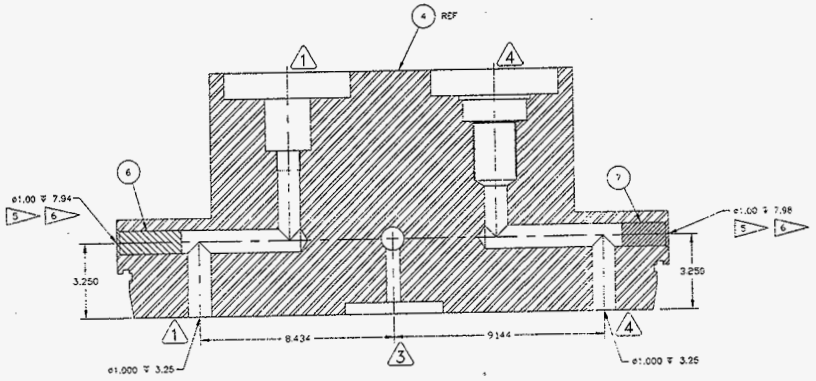

SECTION B-B SHEET 1
ROTATED 90° CCW
SCALE: HALF

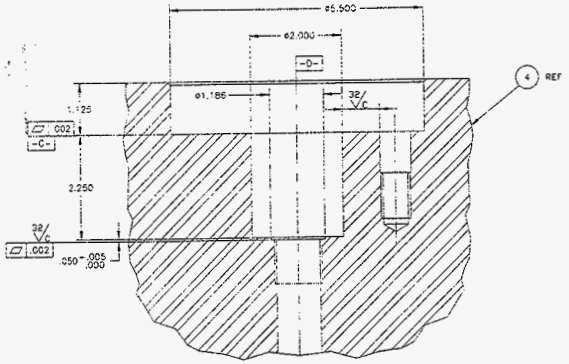

SECTION F-F
PARTIALLY ROTATED 45° CW

FOR GENERAL NOTES AND PARTS LIST SEE SHEET 1.

HNF-SD-SNF-DR-003, REV. 0
APPENDIX 1
MCO DRAWINGS 1-11

U.S. DEPARTMENT OF ENERGY
Richland Operations Office
Duke Engineering & Services Hanford, Inc.

MCO MECHANICAL CLOSURE SHIELD PLUG

620108 H-2-828045 0

DWG NO | TITLE | REF NUMBER | TITLE
DRAWING TRACEABILITY LIST | NEXT USED ON | REFERENCES

REVISIONS
CADFILE B828045B | CADCODE WIN95:AC02:13.0:SS

PARSONS I & T, INC. | SHOWN | SHEET 2 OF

2 PLOT SCALE: 1=1

1 GTITLE.DWG (10/96)

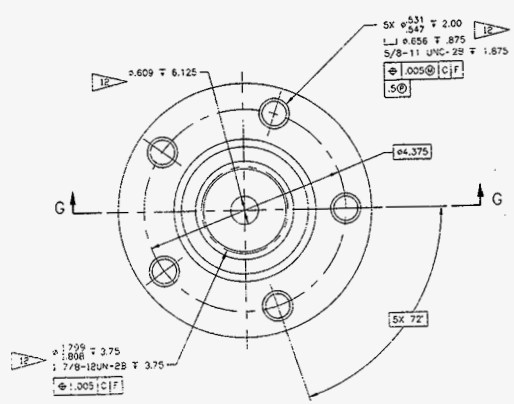

VIEW D SHEET 1
SCALE: FULL

3 LONG PROCESS TUBE

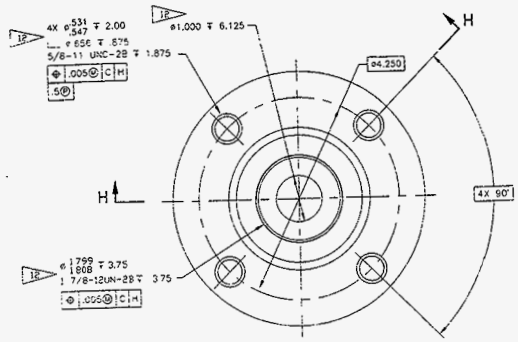

VIEW E SHEET 1
SCALE: FULL

2 PROCESS PRESSURE RELIEF

4 PROCESS VALVE/RUPTURE DISK

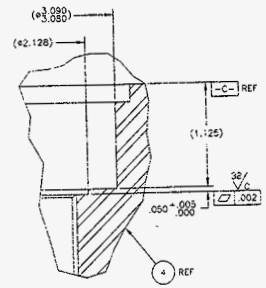

DETAIL J
SCALE: 2/1

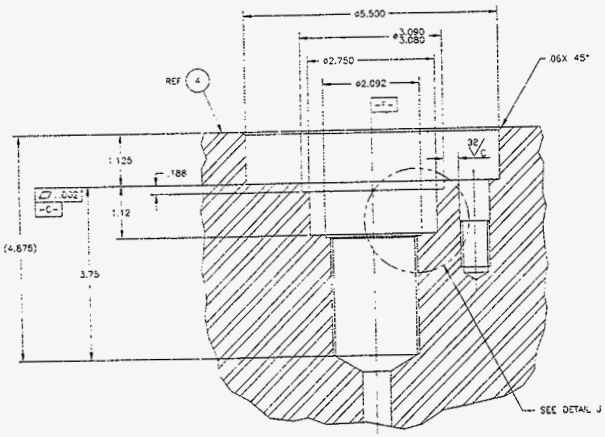

SECTION G-G
SCALE: FULL

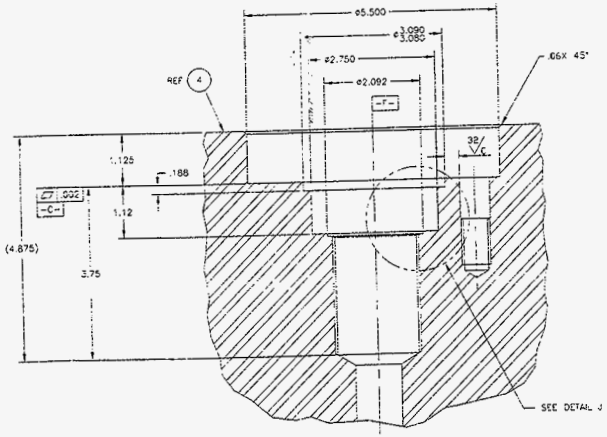

SECTION H-H
PARTIALLY ROTATED 45° CW
SCALE: FULL

FOR GENERAL NOTES AND PARTS LIST SEE SHEET 1.

HNF-SD-SNF-DR-003, REV. 0
APPENDIX 1
MCO DRAWINGS 1-12

U.S. DEPARTMENT OF ENERGY
Richland Operations Office
Duke Engineering & Services Hanford, Inc.

MCO MECHANICAL CLOSURE SHIELD PLUG

F 620108 H-2-828045 0

DWG NO	TITLE	REF NUMBER	TITLE
DRAWING TRACEABILITY LIST		NEXT USED ON	REFERENCES
		CADFILE B32804SC	CADCODE WIN95:ACD2-13.0:SS

REVISIONS

PARSONS 1 & 1, INC. SCALE SHOWN 1=1

2 PLOT SCALE: 1=1

1 GTSTD DWG (10/96)

PARTS/MATERIAL LIST

QTY REQD -0201-010	PART/DASH NUMBER	NOMENCLATURE/DESCRIPTION	MATERIAL/REFERENCE	SHEET	ITEM NO.
	-001	GUARD PLATE	SA 182 F304L SST	1	1
	-002	GUARD PLATE RING	SA 182 F304L SST	1	2
					3
					4
					5

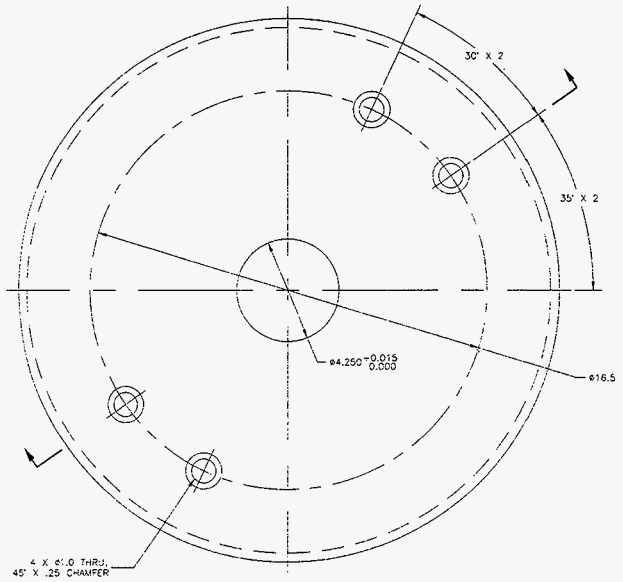

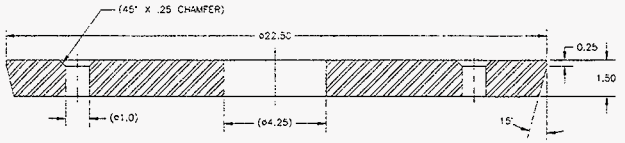

1 GUARD PLATE 6
ROTATED 35° CW
SCALE 1/2

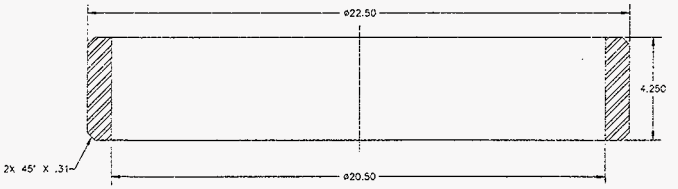

2 GUARD PLATE RING 6
SCALE: 1/2

GENERAL NOTES: (UNLESS OTHERWISE SPECIFIED)

1. ALL DIMENSIONS ARE IN INCHES. DIMENSIONING AND TOLERANCING PER ANSI Y14.5M 1982. TOLERANCES: DECIMAL: .X= ±.060
   .XX= ±.030
   .XXX= ±.015
   FRACTIONAL: ±1/16
   ANGULAR: ±1/2°
   ALL COAXIAL FEATURES SHALL BE CONCENTRIC WITHIN ø.003.
2. MACHINED FILLET RADII SHALL BE .03 MAX.
3. ALL MACHINED SURFACES SHALL BE 125/ OR BETTER PER ANSI B46.1
4. BREAK ALL SHARP EDGES & REMOVE ALL BURRS.
5. WELD CALLOUTS ARE IDENTIFIED ON H-2-828041. FABRICATION, WELDING AND INSPECTION SHALL BE IN ACCORDANCE WITH ASME SECTION III, DIVISION 1, SUBSECTION NB.
6. ADDITIONAL FABRICATION REQUIREMENTS ARE IN HNF-S-0453, FABRICATION SPECIFICATION FOR MULTI-CANISTER OVERPACK.
7. PIECE/PART TOLERANCES ON THESE DRAWINGS SHOULD LEND TO ACCEPTABLE ASSEMBLY GEOMETRIES. ALTERNATE PIECE/PART TOLERANCES MAY BE UTILIZED WITH THE BUYER'S APPROVAL. ACCEPTABLE FINAL ASSEMBLY GEOMETRIES ARE SHOWN IN THE FABRICATION SPECIFICATION'S CRITICAL DIMENSION TABLES/SKETCHES. IN THE EVENT THAT THERE IS A CONFLICT BETWEEN THE CRITICAL DIMENSION TABLES/SKETCHES AND THE DESIGN DRAWINGS, THE BUYER SHALL BE NOTIFIED FOR RESOLUTION.

HNF-SD-SNF-DR-003, REV. 0
APPENDIX 1
MCO DRAWINGS 1-13

DWG NO	TITLE	REF NUMBER	TITLE
		H-2-828045	MCO SHIELD PLUG
		H-2-828050	BASKET STABILIZER

DRAWING TRACEABILITY LIST — REFERENCES — NEXT USED ON H-2-828041 — REVISIONS — CADFILE B828046A — CADCODE WIN95:ACD2:13.0:SS

B. BECKER

U.S. DEPARTMENT OF ENERGY
Richland Operations Office
Duke Engineering & Services Hanford, Inc.

MCO INTERNAL FILTER GUARD

F 620108 H-2-828046 0

PARSONS I & T, INC. SCALE SHOWN

2 PLOT SCALE: 1=1

STITLE.DWG (10/98)

PARTS/MATERIAL LIST

QTY REQD -001	QTY REQD -010	PART/DASH NUMBER	NOMENCLATURE/DESCRIPTION	MATERIAL/REFERENCE	SHEET	ITEM NO
	X	-010	PROCESS VALVE/RUPTURE DISK ASSEMBLY			1
						2
						3
1		-001	PROCESS VALVE	SA-479 304LN		4
1		-002	VALVE NUT	SA-479 304LN		5
1		-003	VALVE BODY	SA-479 304LN		6
						7
						8
1			RUPTURE DISK	316 SST		9

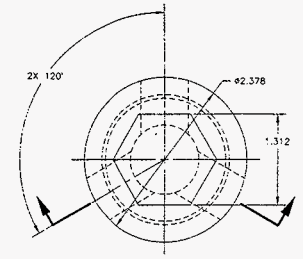

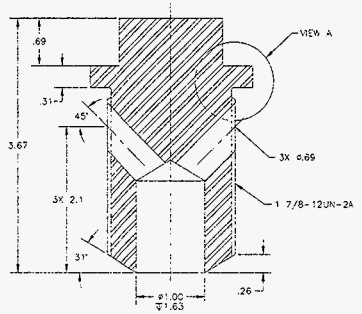

4 PROCESS VALVE
SCALE: 3/2

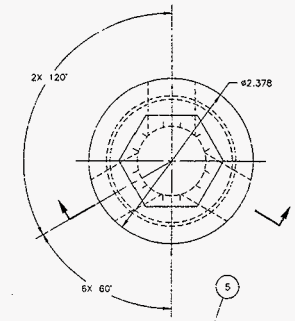

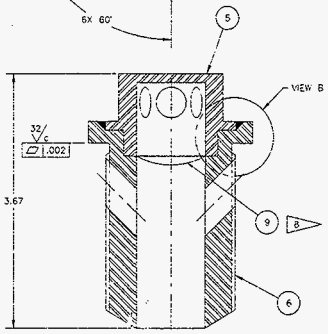

1 PROCESS VALVE/RUPTURE DISK ASSEMBLY
SCALE: 3/2

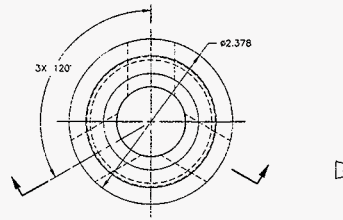

8

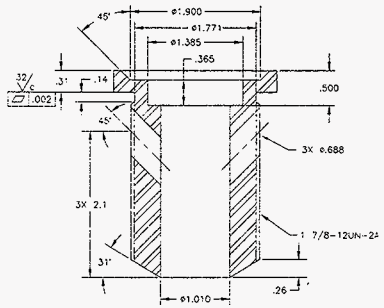

6 VALVE BODY
SCALE: 3/2

GENERAL NOTES: (UNLESS OTHERWISE SPECIFIED)

1. ALL DIMENSIONS ARE IN INCHES. DIMENSIONING AND TOLERANCING PER ANSI Y14.5M 1982. TOLERANCES: DECIMAL: .X= ±.060
   .XX= ±.030
   .XXX= ±.015
   FRACTIONAL: ±1/16
   ANGULAR: ±1/2°
   ALL COAXIAL FEATURES SHALL BE CONCENTRIC WITHIN ø.003.
2. MACHINED FILLET RADII SHALL BE .03 MAX.
3. ALL MACHINED SURFACES SHALL BE 125 OF BETTER PER ANSI B46.1.
4. BREAK ALL SHARP EDGES & REMOVE ALL BURRS.
5. FABRICATION, WELDING AND INSPECTION SHALL BE IN ACCORDANCE WITH ASME SECTION III DIVISIONAL SUBSECTION NG AND SECTION IX.
6. ADDITIONAL FABRICATION REQUIREMENTS ARE IN HNF-S-0453, FABRICATION SPECIFICATION FOR MULTI-CANISTER OVERPACK.
7. PIECE / PART TOLERANCES ON THESE DRAWINGS SHOULD LEND TO ACCEPTABLE ASSEMBLY GEOMETRIES. ALTERNATE PIECE / PART TOLERANCES MAY BE UTILIZED WITH THE BUYER'S APPROVAL. ACCEPTABLE FINAL ASSEMBLY GEOMETRIES ARE SHOWN IN THE FABRICATION SPECIFICATION'S CRITICAL DIMENSION TABLES / SKETCHES. IN THE EVENT THAT THERE IS A CONFLICT BETWEEN THE CRITICAL DIMENSION TABLES / SKETCHES AND THE DESIGN DRAWINGS, THE BUYER SHALL BE NOTIFIED FOR RESOLUTION.

8 RUPTURE DISK MUST MEET ASME B & PV CODE SECTION III, DIVISION 1, SUBSECTION NB. DISK MUST BE CERTIFIED AT 150 PSIG BURST PRESSURE AT 200C AND CAPABLE OF WITHSTANDING 75 PSIG AT 375C. ø1.000 NOMINAL, ø1.365 OD OF LIP.

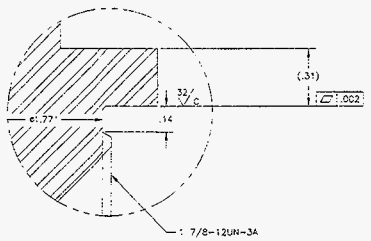

VIEW A
SCALE: 4/1

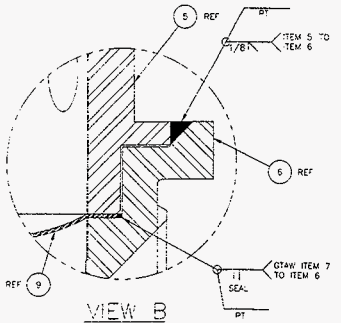

VIEW B
SCALE: 4/1

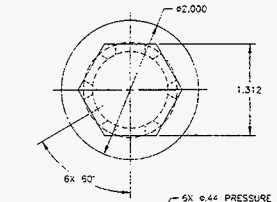

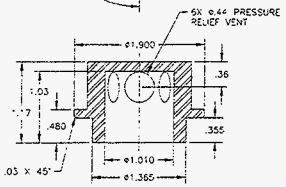

5 VALVE NUT
SCALE: 3/2

DWG NO	TITLE	REFERENCES	REVISIONS
DRAWING TRACEABILITY LIST		NEXT USED ON H-2-828041	CADFILE 9828047A CADCODE WIN95/ACD2 13.0/SS

H-2-828045 MCO SHIELD PLUG — REF NUMBER — TITLE

HNF-SD-SNF-DR-003, REV. 0
APPENDIX 1
MCO DRAWINGS 1-14

U.S. DEPARTMENT OF ENERGY
Richland Operations Office
Duke Engineering & Services Hanford, Inc.

MCO PROCESS VALVES

B. BECKER 5/11/97
PARSONS

F620108 H-2-828047 0

2 PLOT SCALE: 1=1 SHOWN

STITLE.DWG (10/96)

PARTS/MATERIAL LIST

QTY REQD -020	QTY REQD -010	PART/DASH NUMBER	NOMENCLATURE/DESCRIPTION	MATERIAL/REFERENCE	SHEET	ITEM NO
X		-010	4 HOLE COVER PLATE ASSEMBLY			1
X		-020	5 HOLE COVER PLATE ASSEMBLY			2
						3
						4
	1	-001	4 HOLE COVER PLATE	SA 182 F304L SST	1	5
1		-002	5 HOLE COVER PLATE	SA 182 F304L SST	1	6
5	4	-003	COVER BOLT, 5/8-11 UNC-2A	SA 193 GR B8	1	7
						8
						9
1	1	13503	SEAL	EG&G PRESSURE SCIENCE	1	10

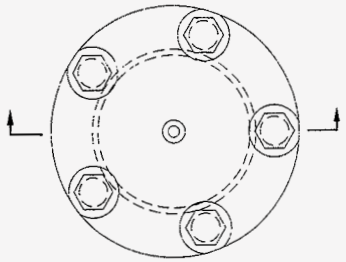

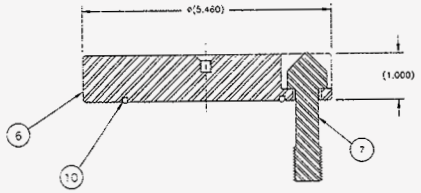

4 HOLE COVER PLATE ASSEMBLY SIMILAR
SCALE: 1/1

5 HOLE COVER PLATE ASSEMBLY SHOWN
SCALE: 1/1

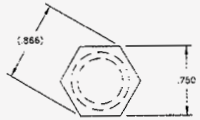

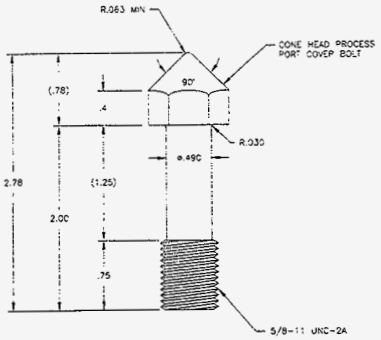

7 COVER BOLT
SCALE: 2/1

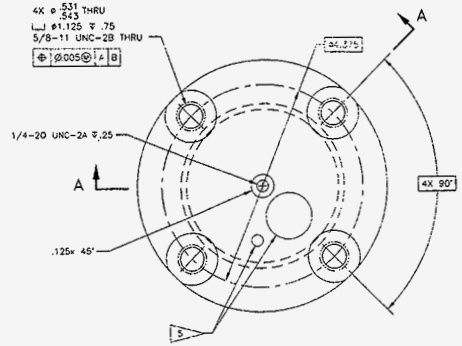

5 4 HOLE COVER PLATE
SCALE: 1/1

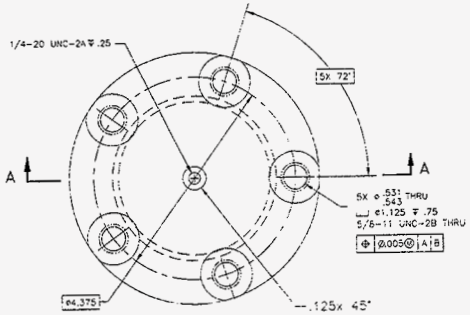

6 5 HOLE COVER PLATE
SCALE: 1/1

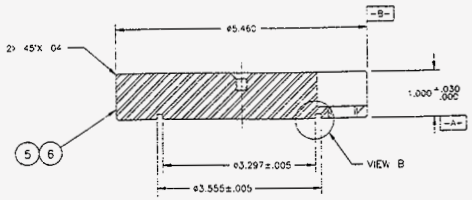

SECTION A-A
TYP OF 4 HOLE AND 5 HOLE COVER PLATES

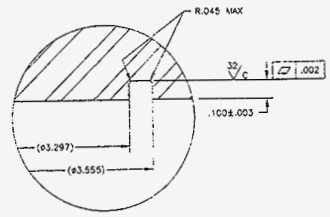

VIEW B
SCALE: 2/1

GENERAL NOTES: (UNLESS OTHERWISE SPECIFIED)

1. ALL DIMENSIONS ARE IN INCHES. DIMENSIONING AND TOLERANCING PER ANSI Y14.5M 1982. TOLERANCES: DECIMAL: .XX= ±.030
   .XXX= ±.015
   ANGLES: ±1/2°
   ALL COAXIAL FEATURES SHALL BE CONCENTRIC WITHIN ø.003.
2. REMOVE ALL BURRS. BREAK SHARP EDGES.
3. ALL MACHINED SURFACES SHALL BE 125/ OR BETTER PER ANSI B46.1.

4 ASSEMBLIES -010 AND -020 ARE IDENTICAL EXCEPT FOR BOLT PATTERN.

5 OPTIONAL: ø.25 AND ø1.00 HOLES TO BEINCORPORATED AT THE REQUEST OF THE BUYER. ITEM 10 IS NOT NECESSARY WITH THE ø1.00 OPTION ONLY.

6. MATERIALS, FABRICATION, WELDING AND INSPECTION SHALL BE IN ACCORDANCE WITH ASME SECTION III, DIVISION 1, SUBSECTION NB.
7. ADDITIONAL FABRICATION REQUIREMENTS ARE IN HNF-S-0453, FABRICATION SPECIFICATION FOR MULTI-CANISTER OVERPACK.
8. PIECE / PART TOLERANCES ON THESE DRAWINGS SHOULD LEND TO ACCEPTABLE ASSEMBLY GEOMETRIES. ALTERNATE PIECE / PART TOLERANCES MAY BE UTILIZED WITH THE BUYER'S APPROVAL. ACCEPTABLE FINAL ASSEMBLY GEOMETRIES ARE SHOWN IN THE FABRICATION SPECIFICATION'S CRITICAL DIMENSION TABLES / SKETCHES. IN THE EVENT THAT THERE IS A CONFLICT BETWEEN THE CRITICAL DIMENSION TABLES / SKETCHES AND THE DESIGN DRAWINGS, THE BUYER SHALL BE NOTIFIED FOR RESOLUTION.

HNF-SD-SNF-DR-003, REV. 0
APPENDIX 1
MCO DRAWINGS 1-15

DWG NO	TITLE	REF NUMBER	TITLE	REFERENCES
		H-2-828045	MCO SHIELD PLUG	
DRAWING TRACEABILITY LIST		NEXT USED ON	H-2-828041	CADFILE 88280484 CADCODE WIN95:ACD2.13:0:SS

REVISIONS					
LTR	DESCRIPTION	ECN NO.	ORIG	CHK	APPD / DATE

BECHTEL HANFORD, INC. — PARSONS + R T INC. — SHOWN

U.S. DEPARTMENT OF ENERGY
Richland Operations Office
Duke Engineering & Services Hanford, Inc.

MCO PROCESS PORT COVER PLATES

620108 H-2-828048 0

SCALE: 1=1 — SHEET 1 OF 1

2 PLOT SCALE: 1=1

1 TITLE.DWG (10/96)

QTY REQD	PART/DASH NUMBER	NOMENCLATURE/DESCRIPTION	MATERIAL/REFERENCE	SHEET	ITEM NO
-010	-001	FILTER MANIFOLD ASSEMBLY	HNF-S-0556	1	1

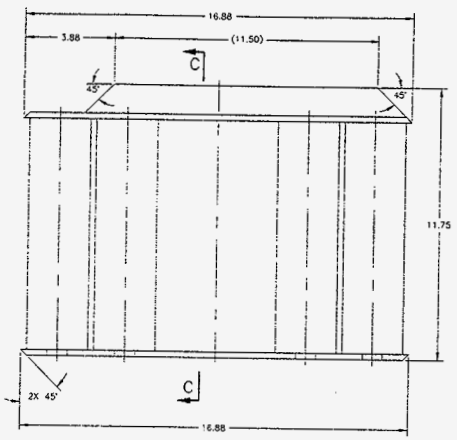

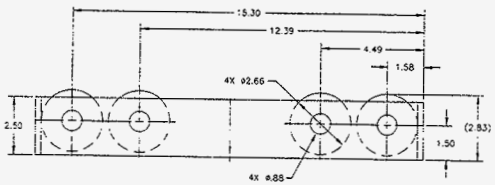

1 FILTER ASSEMBLY

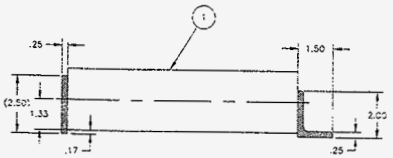

SECTION C-C

ROTATED 90° CW

GENERAL NOTES: (UNLESS OTHERWISE SPECIFIED)

1. ALL DIMENSIONS ARE IN INCHES. DIMENSIONING AND TOLERANCING PER ANSI Y14.5M 1982. TOLERANCES: DECIMAL: .X= ±.060
   .XX= ±.030
   .XXX= ±.015
   FRACTIONAL: ±1/16
   ANGULAR: ±1/2°
   ALL COAXIAL FEATURES SHALL BE CONCENTRIC WITHIN ø.003.
2. MACHINED FILLET RADII SHALL BE .03 MAX.
3. ALL MACHINED SURFACES SHALL BE 125/ OR BETTER PER ANSI B46.1.
4. BREAK ALL SHARP EDGES & REMOVE ALL BURRS.
5. MATERIAL, FABRICATION, WELDING AND INSPECTION SHALL BE IN ACCORDANCE WITH ASME SECTION III, DIVISION 1, SUBSECTION NB.
6. ADDITIONAL FABRICATION REQUIREMENTS ARE IN HNF-S-0453, FABRICATION SPECIFICATION FOR MULTI-CANISTER OVERPACK.
7. PIECE / PART TOLERANCES ON THESE DRAWINGS SHOULD LEND TO ACCEPTABLE ASSEMBLY GEOMETRIES. ALTERNATE PIECE / PART TOLERANCES MAY BE UTILIZED WITH THE BUYER'S APPROVAL. ACCEPTABLE FINAL ASSEMBLY GEOMETRIES ARE SHOWN IN THE FABRICATION SPECIFICATION'S CRITICAL DIMENSION TABLES / SKETCHES. IN THE EVENT THAT THERE IS A CONFLICT BETWEEN THE CRITICAL DIMENSION TABLES / SKETCHES AND THE DESIGN DRAWINGS, THE BUYER SHALL BE NOTIFIED FOR RESOLUTION.

HNF-SD-SNF-DR-003, REV. 0
APPENDIX 1
MCO DRAWINGS 1-16

DWG NO	TITLE	REF NUMBER	TITLE
		H-2-828045	MCO SHIELD PLUG
DRAWING TRACEABILITY LIST		NEXT USED ON	H-2-828041

REFERENCES

REVISIONS

CADFILE B828049A CADCODE WIN95:ACD2:13.0:SS

BT BECKER

U.S. DEPARTMENT OF ENERGY
Richland Operations Office
Duke Engineering & Services Hanford, Inc

MCO INTERNAL
FILTER ASSEMBLY

F 620108 H-2-828049 0

PARSONS I & C, INC. SCALE 1=2 SHEET 1 OF 1

2 PLOT SCALE: 1=1

DWG NO H-2-828049 DK 1 OF 1 REV 0

PARTS/MATERIAL LIST				
PART/DASH NUMBER	NOMENCLATURE/DESCRIPTION	MATERIAL/REFERENCE	SHEET	ITEM NO.
-001	BASKET STABILIZER EXTENSION	SA-276 304L	1	1

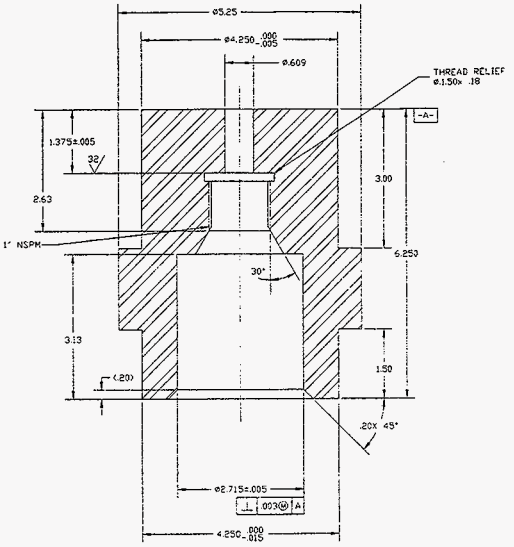

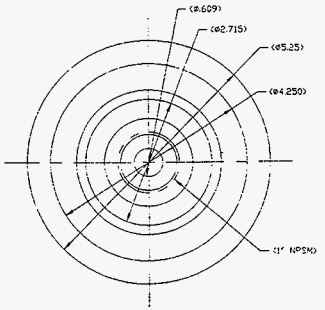

1 BASKET STABILIZER EXTENSION

GENERAL NOTES: (UNLESS OTHERWISE SPECIFIED)

1. ALL DIMENSIONS ARE IN INCHES. DIMENSIONING AND TOLERANCING PER ANSI Y14.5M 1982. TOLERANCES: DECIMAL: .X= ±.060
   .XX= ±.030
   .XXX= ±.015
   FRACTIONAL: ±1/16
   ANGULAR: ±1/2°
   ALL COAXIAL FEATURES SHALL BE CONCENTRIC WITHIN ø.003.
2. MACHINED FILLET RADII SHALL BE .03 MAX.
3. ALL MACHINED SURFACES SHALL BE 125/ PER ANSI B46.1.
4. BREAK ALL SHARP EDGES & REMOVE ALL BURRS.
5. MATERIALS, FABRICATION, WELDING AND INSPECTION SHALL BE IN ACCORDANCE WITH ASME CODE SECTION III, DIVISION 1, SUBSECTION NB AND SECTION IX.
6. ADDITIONAL FABRICATION REQUIREMENTS ARE IN HNF-S-0453, FABRICATION SPECIFICATION FOR MULTI-CANISTER OVERPACK.
7. PIECE / PART TOLERANCES ON THESE DRAWINGS SHOULD LEND TO ACCEPTABLE ASSEMBLY GEOMETRIES. ALTERNATE PIECE / PART TOLERANCES MAY BE UTILIZED WITH THE BUYER'S APPROVAL. ACCEPTABLE FINAL ASSEMBLY GEOMETRIES ARE SHOWN IN THE FABRICATION SPECIFICATION'S CRITICAL DIMENSION TABLES / SKETCHES. IN THE EVENT THAT THERE IS A CONFLICT BETWEEN THE CRITICAL DIMENSION TABLES / SKETCHES AND THE DESIGN DRAWINGS, THE BUYER SHALL BE NOTIFIED FOR RESOLUTION.

HNF-SD-SNF-DR-003, REV. 0
APPENDIX 1
MCO DRAWINGS 1-17

DWG NO	TITLE	REF NUMBER	TITLE
		H-2-828051	MCO PROCESS TUBE
		H-2-828046	INTERNAL FILTER SHIELD
		H-2-828045	MCO SHIELD PLUG

DRAWING TRACEABILITY LIST — REFERENCES — NEXT USED ON H-2-828041

REVISIONS — CADFILE B828050A — CADCODE WIN95:ACD2:13.0:SS

BT BECKER 5/23/97

U.S. DEPARTMENT OF ENERGY
Richland Operations Office
Duke Engineering & Services Hanford, Inc

MCO BASKET STABILIZER EXTENSION

F 620108 H-2-828050 0

PARSONS 1 & 1, INC — SCALE 1=1 — SHEET 1 OF 1

2 PLOT SCALE: 1=1 — 1 CTITLE.DWG (10/96)

PARTS/MATERIAL LIST

QTY REQD 020-010		PART/DASH NUMBER	NOMENCLATURE/DESCRIPTION	MATERIAL/REFERENCE	SHEET	ITEM NO.
	X	-010	PROCESS TUBE ASSEMBLY			1
						2
						3
	1	-001	PROCESS TUBE, PIPE, 1"X 147" L SCHED XXS	SA-312, GR TP 304L SST	1	4
						5
						6
	1	613A50-0014-1	SEAL	EG&G		7

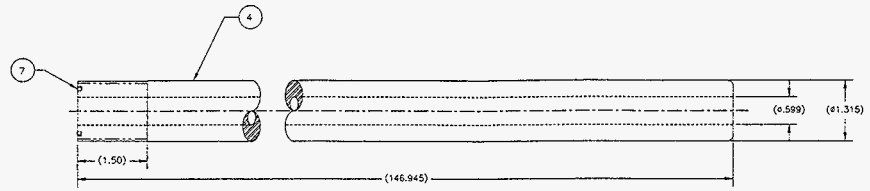

1 PROCESS TUBE ASSEMBLY

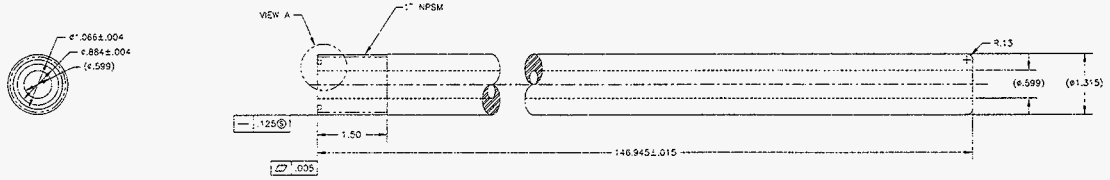

4 PROCESS TUBE

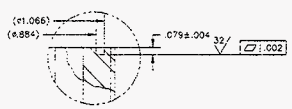

VIEW A
SCALE: 2/1
ROTATED 90° CW

GENERAL NOTES: (UNLESS OTHERWISE SPECIFIED)

1. ALL DIMENSIONS ARE IN INCHES. DIMENSIONING AND TOLERANCING PER ANSI Y14.5M 1982. TOLERANCES: DECIMAL: .X= ±.060
   .XX= ±.030
   .XXX= ±.015
   FRACTIONAL: ±1/16
   ANGULAR: ±1/2°
   ALL COAXIAL FEATURES SHALL BE CONCENTRIC WTHIN ø.003.
2. MACHINED FILLET RADII SHALL BE .03 MAX.
3. ALL MACHINED SURFACES SHALL BE 125/ OF BETTER PER ANSI B46.1.
4. BREAK ALL SHARP EDGES & REMOVE ALL BURRS.
5. MATERIALS, FABRICATION, WELDING AND INSPECTION SHALL BE IN ACCORDANCE WITH ASME SECTION III DIVISIONAL SUBSECTION NB AND SECTION IX.
6. ADDITIONAL FABRICATION REQUIREMENTS ARE IN HNF-S-0453, FABRICATION SPECIFICATION FOR MULTI-CANISTER OVERPACK.
7. PIECE / PART TOLERANCES ON THESE DRAWINGS SHOULD LEND TO ACCEPTABLE ASSEMBLY GEOMETRIES. ALTERNATE PIECE / PART TOLERANCES MAY BE UTILIZED WITH THE BUYER'S APPROVAL. ACCEPTABLE FINAL ASSEMBLY GEOMETRIES ARE SHOWN IN THE FABRICATION SPECIFICATION'S CRITICAL DIMENSION TABLES / SKETCHES. IN THE EVENT THAT THERE IS A CONFLICT BETWEEN THE CRITICAL DIMENSION TABLES / SKETCHES AND THE DESIGN DRAWINGS, THE BUYER SHALL BE NOTIFIED FOR RESOLUTION.

HNF-SD-SNF-DR-003, REV. 0
APPENDIX 1
MCO DRAWINGS 1-18

DWG NO	TITLE	REF NUMBER	TITLE
		H-2-828044	MCO SHELL BOTTOM
		H-2-828050	BASKET STABILIZER
			REFERENCES

DRAWING TRACEABILITY LIST — NEXT USED ON H-2-828041

REVISIONS

CADFILE 9828051A — CADCODE WIN95:ACD2:13.0:SS

BT BECKER

U.S. DEPARTMENT OF ENERGY
Richland Operations Office
Duke Engineering & Services Hanford, Inc

MCO PROCESS TUBE

F 620108 H-2-828051 0

PARSONS - & T INC. — SCALE 1=1 — SHEET 1 OF 1

2 PLOT SCALE: 1=1 — GTITLE.DWG (10/96)

PARTS/MATERIAL LIST						
QTY REQD -020	-010	PART/DASH NUMBER	NOMENCLATURE/DESCRIPTION	MATERIAL/REFERENCE	SHEET	ITEM NO
		-001	PROCESS TUBE GUIDE CONE	ASTM A479 TYPE 304L	1	1

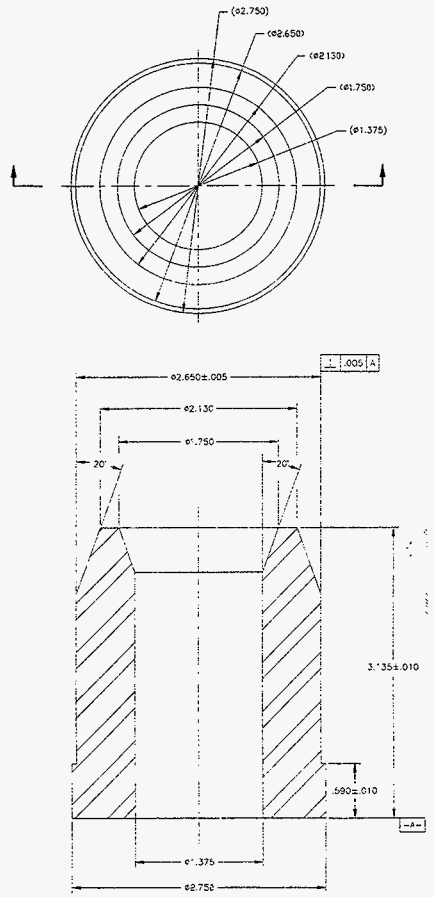

1 PROCESS TUBE GUIDE CONE

GENERAL NOTES: (UNLESS OTHERWISE SPECIFIED)

1. ALL DIMENSIONS ARE IN INCHES. DIMENSIONING AND TOLERANCING PER ANSI Y14.5M 1982. TOLERANCES: DECIMAL: .X= ±.060
   .XX= ±.030
   .XXX= ±.015
   FRACTIONAL: ±1/16
   ANGULAR: ±1/2°
   ALL COAXIAL FEATURES SHALL BE CONCENTRIC WITHIN ø.003.
2. MACHINED FILLET RADII SHALL BE .03 MAX.
3. ALL MACHINED SURFACES SHALL BE 125/ OF BETTER PER ANSI B46.1.
4. BREAK ALL SHARP EDGES & REMOVE ALL BURRS.
5. FABRICATION, WELDING AND INSPECTION SHALL BE IN ACCORDANCE WITH ASME SECTION III, DIVISION 1, SUBSECTION NB.
6. ADDITIONAL FABRICATION REQUIREMENTS ARE IN HNF-S-0453, FABRICATION SPECIFICATION FOR MULTI-CANISTER OVERPACK
7. PIECE/PART TOLERANCES ON THESE DRAWINGS SHOULD LEND TO ACCEPTABLE ASSEMBLY GEOMETRIES. ALTERNATE PIECE/PART TOLERANCES MAY BE UTILIZED WITH THE BUYER'S APPROVAL. ACCEPTABLE FINAL ASSEMBLY GEOMETRIES ARE SPECIFIED IN CRITICAL DIMENSION TABLES/SKETCHES OF THE FABRICATION SPECIFICATION (HNF-S-0453) AND ARE BINDING REGARDLESS OF PIECE PART TOLERANCES.

HNF-SD-SNF-DR-003, REV. 0
APPENDIX 1
MCO DRAWINGS 1-19

DWG NO	TITLE
H-2-828053	MCO BSKT SUPPORT PLATE
H-2-828051	MCO DIP TUBE
H-2-828050	SHELL BOTTOM

DRAWING TRACEABILITY LIST — REFERENCES: REF NUMBER, TITLE; NEXT USED ON H-2-828041

REVISIONS: DESCRIPTION, CHECK

CADFILE B828052A — CADCODE WIN95:ACD2 1.3.0 SS

BT BECKER 5-9-97

U.S. DEPARTMENT OF ENERGY
Richland Operations Office
Duke Engineering & Services Hanford, Inc.

MCO PROCESS TUBE GUIDE CONE

F 620108 H-2-828052 0

PARSONS + & T, INC. SCALE SHOWN

2 PLOT SCALE: 1=1

GTITLE.DWG (10/96)

PARTS/MATERIAL LIST

QTY REQD -020	-010	PART/DASH NUMBER	NOMENCLATURE/DESCRIPTION	MATERIAL/REFERENCE	SHEET	ITEM NO.
		-001	BASKET SUPPORT PLATE, FLAT BAR 1/2 THK	SA-240 304L	1	1

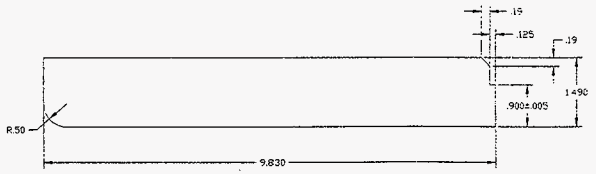

1 BASKET SUPPORT PLATE

GENERAL NOTES: (UNLESS OTHERWISE SPECIFIED)

1. DIMENSIONING AND TOLERANCING PER ANSI Y14.5M-1982. DIMENSIONS ARE IN INCHES.
2. TOLERANCES: DECIMALS; .XX = ±.03, .XXX = ±.015 ANGULAR; ± 1°.
3. ALL MACHINED SURFACES 125 OR BETTER IN ACCORDANCE WITH ANSI B46.1.
4. BREAK ALL SHARP EDGES & REMOVE ALL BURRS.
5. ADDITIONAL FABRICATION REQUIREMENTS ARE IN HNF-S-0453, FABRICATION SPECIFICATION FOR MULTI-CANISTER OVERPACK.
6. ALL UNSPECIFIED MACHINE TOOL RADII SHALL BE .03 MAXIMUM
7. MATERIALS, FABRICATION, WELDING AND INSPECTION SHALL BE IN ACCORDANCE WITH ASME SECTION III, DIVISION 1, SUBSECTION NB.
8. PIECE / PART TOLERANCES ON THESE DRAWINGS SHOULD LEND TO ACCEPTABLE ASSEMBLY GEOMETRIES. ALTERNATE PIECE / PART TOLERANCES MAY BE UTILIZED WITH THE BUYER'S APPROVAL. ACCEPTABLE FINAL ASSEMBLY GEOMETRIES ARE SHOWN IN THE FABRICATION SPECIFICATION'S CRITICAL DIMENSION TABLES / SKETCHES. IN THE EVENT THAT THERE IS A CONFLICT BETWEEN THE CRITICAL DIMENSION TABLES / SKETCHES AND THE DESIGN DRAWINGS, THE BUYER SHALL BE NOTIFIED FOR RESOLUTION.

HNF-SD-SNF-DR-003, REV. 0
APPENDIX 1
MCO DRAWINGS 1-20

DWG NO	TITLE	REF NUMBER	TITLE
		H-2-828052	PROCESS TUBE GUIDE CONE
		H-2-828044	SHELL BOTTOM

DRAWING TRACEABILITY LIST — REFERENCES — NEXT USED ON H-2-828041

REVISIONS — CADFILE B828053A — CADCODE WIN95:ACD2:13.0:SS

BT BECKER

U.S. DEPARTMENT OF ENERGY
Richland Operations Office
Duke Engineering & Services Hanford, Inc.

MCO BASKET SUPPORT PLATE

620108 H-2-828053 0

PARSONS I & T, INC. 1=1 SHEET 1 OF 1

2 PLOT SCALE: 1=1 — 1 TITLE.DWG (10/96)

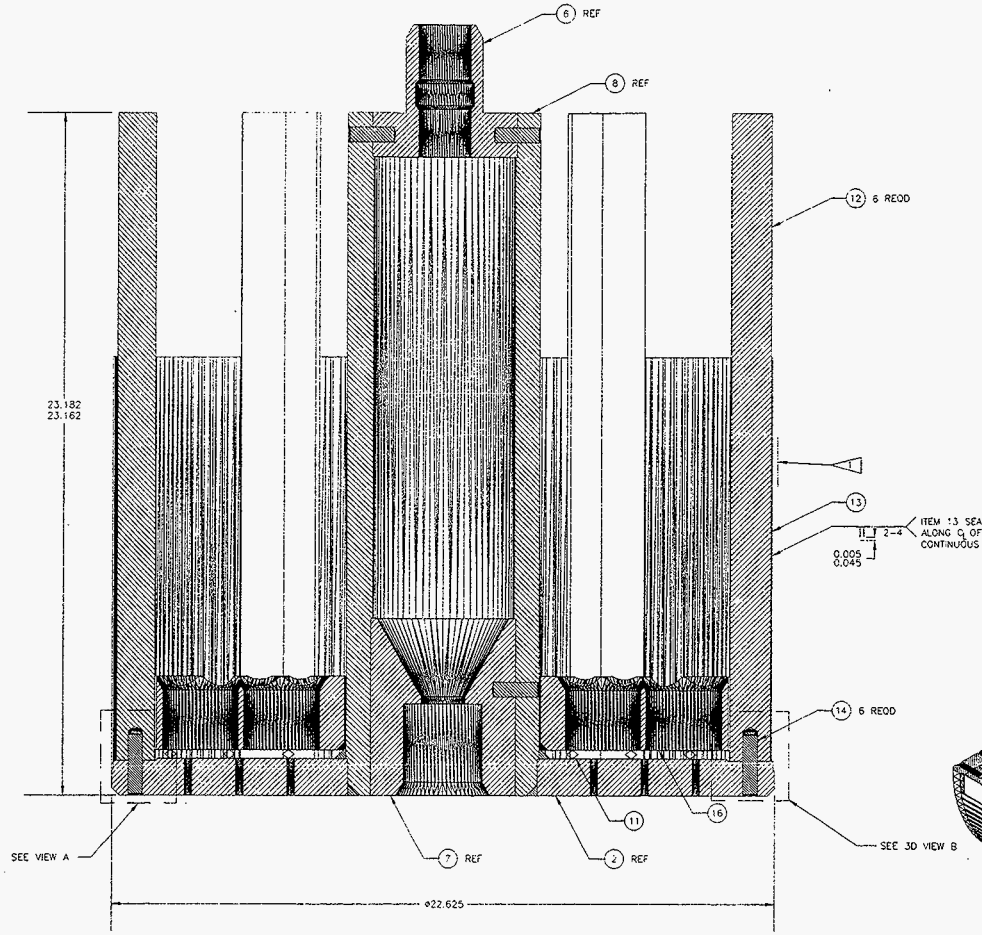

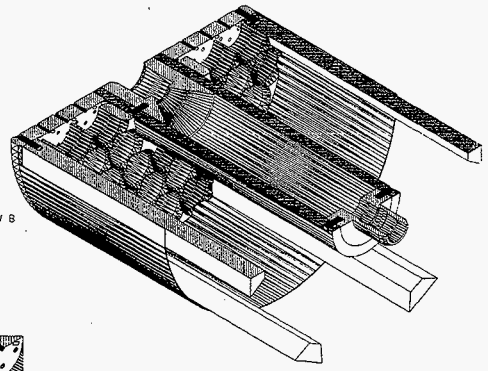

1 ASSEMBLY
SCALE: 1/2

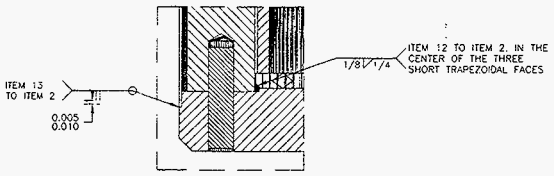

VIEW A
SCALE: 1/1

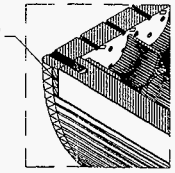

3D VIEW B
SCALE: NONE

PART/MATERIAL LIST

QUANTITY REQUIRED -040	-030	-020	-010	PART/DASH NUMBER	NOMENCLATURE/DESCRIPTION	MATERIAL/REFERENCE	SHEET	ITEM NO.
		X		-010	ASSEMBLY		1	1
		X	1	-020	SUBASSEMBLY, CENTER POST & BASEPLATE		2	2
	X	1		-030	SUBASSEMBLY, CENTER POST		2	3
								4
								5
1				-006	CENTER COUPLING, BAR ROUND ø 5" X 4.5"L	SA-479 TP 304L SST	3	6
1				-007	CENTER BUSHING, BAR ROUND ø 5" X 8"L	SA-479 TP 304L SST	3	7
1				-008	CENTER POST, PIPE ø 6" SCHD XXS (0.864 WALL) SMLS	SA-312 TP 304L SST	3	8
	1			-009	BOTTOM PLATE 1.250" THK ø 24"	SA-240 TP 304L SST	4	9
								10
		1		-011	SPACER, AL 5005H-34 EXPANDED METAL 0.330" THK	RYERSON STYLE 3/4 NO. 081 HVY	5	11
		6		-012	OUTSIDE POST, CUSTOM TRAPEZOID	A51M-240 TP 304N SST	5	12
		AR		-013	SHROUD, SHEET METAL 18 GA (.048" THK) X 14" X 71"L	ASTM A-240 TP 304L SST	1	13
		6		-014	.500 COILED TYPE SPRING PIN X 2.0" LONG	SAE 30302 OR 30304 ASME B18.8.2, 1994	-	14
5				-015	.500 COILED TYPE SPRING PIN X 1.5" LONG	SAE 30302 OR 30304 ASME B18.8.2, 1994	-	15
		1		-016	FUEL RACK, CAST OR WROUGHT ALUMINUM	ASTM B26 356.0-T6 ALUMINUM	4	16

GENERAL NOTES:

1. ALL PARTS AND MATERIAL AS SPECIFIED OR ENGINEERING APPROVED EQUAL.
2. ABBREVIATIONS ARE IN ACCORDANCE WITH ANSI Y1.1-72.
3. WELDING SYMBOLS ARE IN ACCORDANCE WITH AWS A2.4-79.
4. SURFACE TEXTURE SYMBOLS ARE IN ACCORDANCE WITH ANSI Y14.36-78 SURFACE TEXTURE VALUES ARE IN MICROINCHES AND ARE IN ACCORDANCE WITH ANSI B46.1-85
5. ALL UNSPECIFIED MACHINED SURFACES SHALL BE $\sqrt{}^{125}$ OR BETTER.
6. REMOVE ALL BURRS AND BREAK ALL SHARP EDGES
7. ALL UNSPECIFIED MACHINE TOOL RADII SHALL BE .03 MAXIMUM.
8. WELDED SURFACES SHALL BE SMOOTH AND UNIFORM IN APPEARANCE WITHOUT ABRUPT CHANGES IN CONTOUR.
9. DIMENSIONING AND TOLERANCING SHALL BE PER ANSI Y14.5M-1982. DIMENSIONS ARE IN INCHES AND APPLY AT 72°F UNLESS OTHERWISE SPECIFIED. UNSPECIFIED TOLERANCES SHALL BE:
   - DECIMAL .X ± .1, .XX ± .03, .XXX ± .010
   - ANGULAR: ± 1°
   - ALL IMPLIED 90° ANGLES SHALL BE PERPENDICULAR WITHIN THE GREATEST TOLERANCE OF THE LINEAR DIMENSION.
   - ALL COAXIAL FEATURES SHALL BE CONCENTRIC WITHIN ø.003 UNLESS OTHERWISE SPECIFIED.
10. APPROXIMATE WEIGHT = 397 LB.
11. FABRICATION, WELDING AND INSPECTION SHALL BE IN ACCORDANCE WITH ASME SECTION III DIVISION 1, SUBSECTION NG AND SECTION IX.
12. MATE PARTS IN ACCORDANCE WITH, INTERFERENCE LOCATIONAL FITS PER ANSI B4.1-1967, R1979.
13. ADDITIONAL FABRICATION REQUIREMENTS ARE IN HNF-S-0453, FABRICATION SPECIFICATION FOR MULTI-CANISTER OVERPACK.
14. PIECE / PART TOLERANCES ON THESE DRAWINGS SHOULD LEND TO ACCEPTABLE ASSEMBLY GEOMETRIES. ALTERNATE PIECE / PART TOLERANCES MAY BE UTILIZED WITH THE BUYER'S APPROVAL. ACCEPTABLE FINAL ASSEMBLY GEOMETRIES ARE SHOWN IN THE FABRICATION SPECIFICATION'S CRITICAL DIMENSION TABLES / SKETCHES. IN THE EVENT THAT THERE IS A CONFLICT BETWEEN THE CRITICAL DIMENSION TABLES / SKETCHES AND THE DESIGN DRAWINGS, THE BUYER SHALL BE NOTIFIED FOR RESOLUTION.

NOTES:

1. IDENTIFY PER SECTION 6.4.3 OF HNF-S-0453, FABRICATION SPECIFICATION FOR MULTI-CANISTER OVERPACK, WITH SERIAL NUMBER IN APPROX. LOCATION SHOWN.
2. MACHINE BOTTOM SURFACE OF ITEMS ⑧ AND ⑨ FLUSH WITH BOTTOM SURFACE OF PREASSEMBLED ITEM ⑦ AFTER WELDING.
3. ø$^{.493}_{.510}$ T 0.70 INTO ⑥ AND ⑦ RESPECTIVELY. LOCATE FROM ⑧ AT ASSEMBLY.
4. COAT CONTACT SURFACES OF MATING PARTS WITH NEOLUBE (GRAPHITE/ALCOHOL) BEFORE ASSEMBLY.
5. SUGGESTED PIECE TOLERANCE MAY BE ADJUSTED BY NO MORE THAN ±0.005 AS LONG AS AN ANSI B4.1-1967 INTERFERANCE LOCATIONAL FIT CLASS LN-2 IS OBTAINED.
6. WELDING AND NDE SHALL BE IN ACCORDANCE WITH ASME B&PV CODE, 1995 EDITION, SECTION III, DIVISION 1, SUBSECTION NG.
7. BASEPLATE HOLES FOR THE ATTACHMENT OF THE SIDEPOSTS MAY BE DRILLED BEFORE OR AFTER ASSEMBLY OF THE BASEPLATE AND THE CENTER POST, AS LONG AS THE SPECIFIED LOCATIONAL TOLERANCE OF THESE HOLES IS MET ON THE SUBASSEMBLY.

1-21

HNF-SD-SNF-DR-003, Rev. 0
Appendix 1
MCO Drawings

DRAWING TRACEABILITY LIST			REVISIONS					
DWG NO	TITLE	REF NUMBER / REFERENCES	REV NO	DESCRIPTION	REV BY / DATE	CHK / COMPTN
NEXT USED ON H-2-828041			CADFILE B828060A	CADCODE WIN95:ACD3.13.0:SS		

DRAWN	J. D. OSTERLOH	5-5-97
CHECKED		
ENG APPR		
QAE APPR		
COG APPR		
PE APPR		
PROJ APPR		
DOE APPR		

U.S. DEPARTMENT OF ENERGY
Richland Operations Office
Duke Engineering & Services Hanford, Inc.

K-BASIN SNF
STORAGE BASKET
MARK 1A

SIZE F	FSC 6210	DWG NO H-2-828060	REV 0
SCALE NONE	PARSONS I & T, INC.	SHEET 1 OF 5	

MK 60 H-2-828060

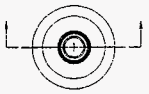

3 SUBASSEMBLY, CENTER POST
SCALE: 1/4

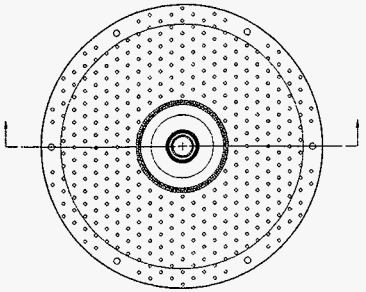

2 SUBASSEMBLY, CENTER POST & BASEPLATE
SCALE: 1/4

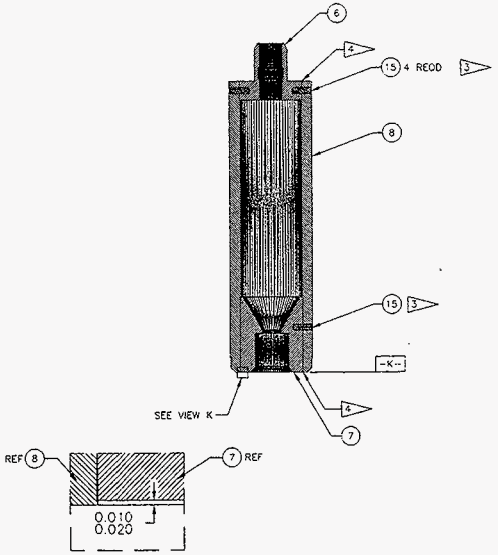

VIEW K
SCALE: NONE

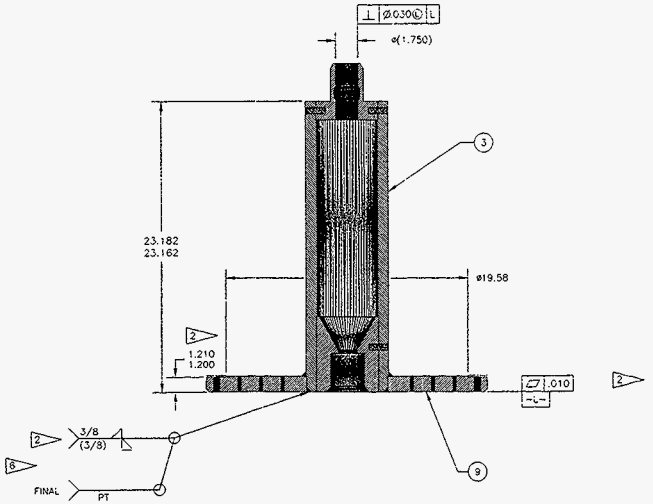

SEE SHEET 1 FOR GENERAL NOTES

HNF-SD-SNF-DR-003, Rev. 0
Appendix 1
MCO Drawings

1-22

DWG NO	TITLE	REF NUMBER	TITLE
DRAWING TRACEABILITY LIST		NEXT USED ON SHEET 1	REFERENCES

REVISIONS

CADFILE B828060B CADCODE WIN95:ACD3:13.0:SS

J D OSTERLOH 5-7-97

U.S. DEPARTMENT OF ENERGY
Richland Operations Office
Duke Engineering & Services Hanford, Inc.

K-BASIN SNF
STORAGE BASKET
MARK 1A

F 620108 H-2-828060 0

PARSONS I & T, INC. SCALE SHOWN SHEET 2 OF

DWG NO H-2-828060

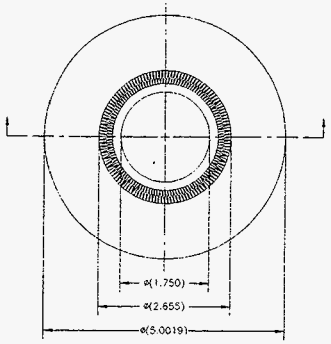

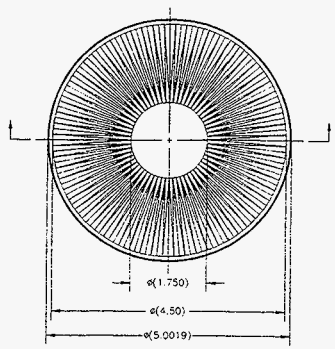

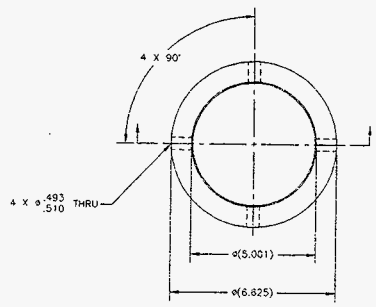

8 CENTER POST
SCALE: 1/2

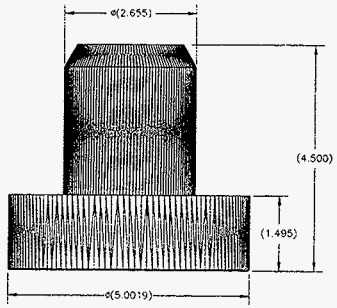

6 CENTER COUPLING
SCALE: 1/1

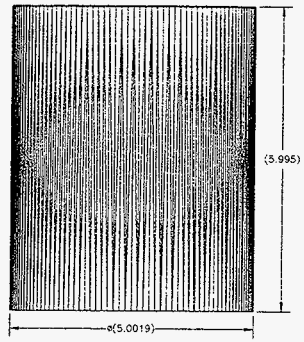

7 CENTER BUSHING
SCALE: 1/1

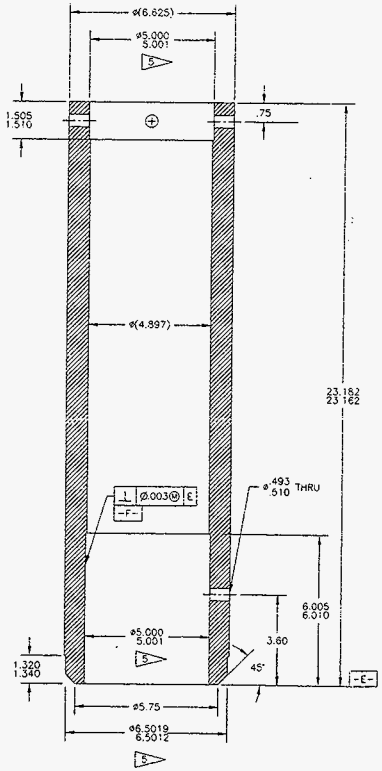

SEE SHEET 1 FOR GENERAL NOTES

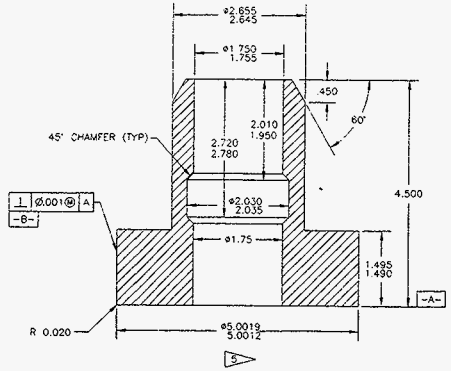

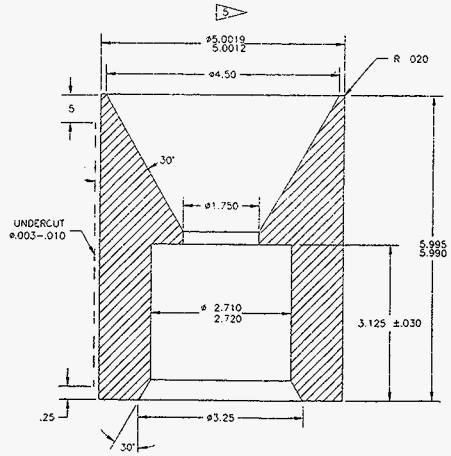

HNF-SD-SNF-DR-003, Rev. 0
Appendix 1
MCO Drawings

1-23

DRAWING TRACEABILITY LIST											
DWG NO	TITLE	REF NUMBER	TITLE	REV	REV DATE	DESCRIPTION	ECN	CHK	APP	DATE
						REVISIONS				
NEXT USED ON SHEET 2			REFERENCES	CADFILE	B828060C	CADCODE	WIN95-ACD3-13.0-SS			

DRAWN J. D. OSTERLOH 5-1-97
DESIGN ENGR
PROJ ENGR
QUAL ENGR
PROJ MGR
DESIGN AGENT PARSONS T & T, INC

U.S. DEPARTMENT OF ENERGY
Richland Operations Office
Duke Engineering & Services Hanford, Inc.

K-BASIN SNF
STORAGE BASKET
MARK 1A

DRAWING NO F 620108 H-2-828060 REV 0
SCALE SHOWN
SHEET 3 OF

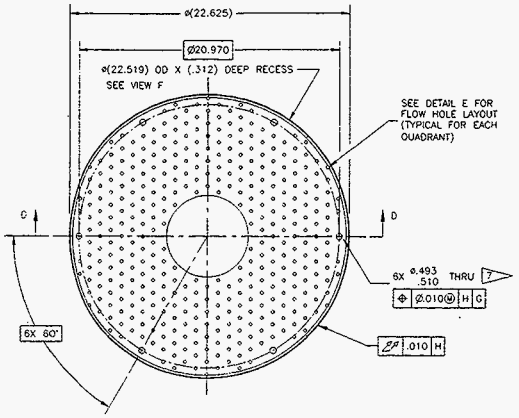

9 BOTTOM PLATE
SCALE: 1/4

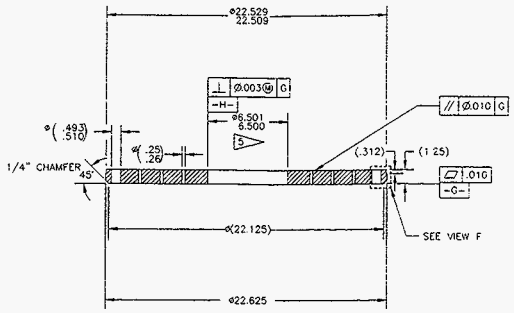

SECTION D-D
SCALE: 1/4

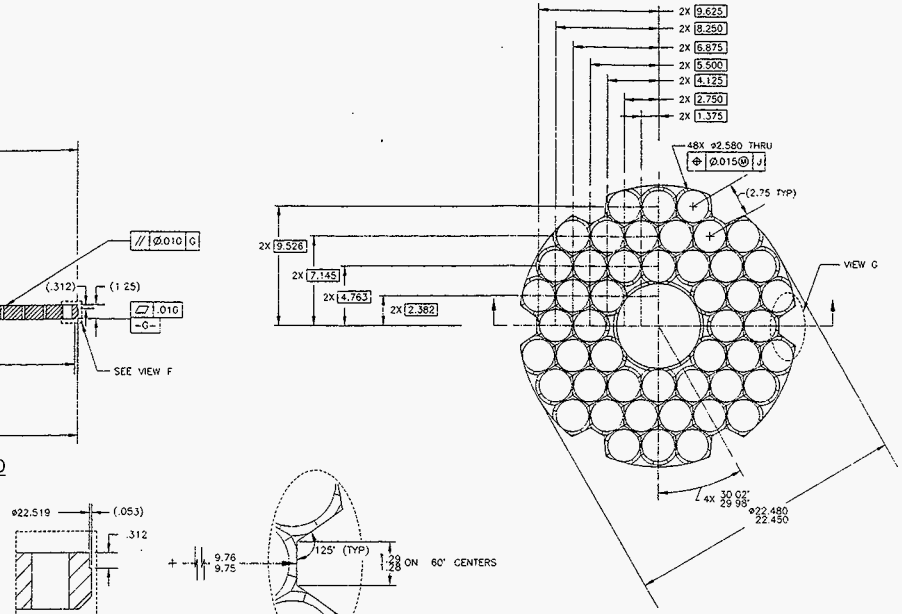

16 FUEL RACK
SCALE: 1/4

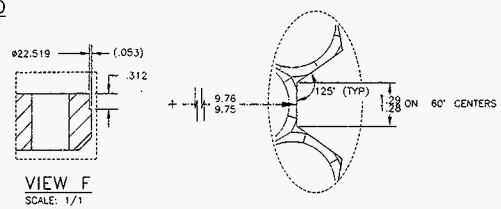

VIEW F
SCALE: 1/1

VIEW G
SCALE: NONE

FLOW HOLE LAYOUT

ROWS		COLUMNS													
		#	AA	A	B	C	D	E	F	G	H	I	J	K	L
#	Y=	X=	0.00	0.87	1.73	2.60	3.46	4.33	5.20	6.06	6.93	7.79	8.66	9.53	10.39
22	11.00		X												
21	10.50			X		X									
20	10.00		X		X		X								
19	9.50			X		X									
18	9.00		X		X		X								
17	8.50			X		X		X							
16	8.00		X		X		X		X		X				
15	7.50			X		X		X		X		X			
14	7.00		X		X		X		X		X				
13	6.50			X		X		X		X		X			
12	6.00		X		X		X		X		X		X		
11	5.50			X		X		X		X		X		X	
10	5.00		X		X		X		X		X		X		
9	4.50			X		X		X		X		X		X	
8	4.00		X		X		X		X		X		X		
7	3.50			X		X		X		X		X		X	
6	3.00						X		X		X		X		X
5	2.50					X		X		X		X		X	
4	2.00						X		X		X		X		X
3	1.50							X		X		X		X	
2	1.00						X		X		X		X		
1	0.50							X		X		X		X	
0	0.00								X		X		X		

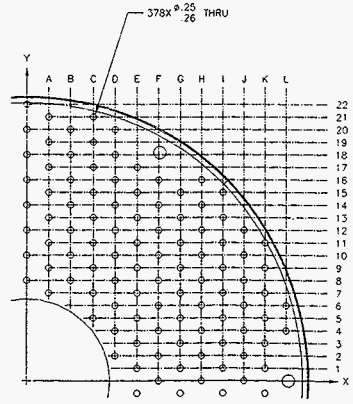

E FLOW HOLE LAYOUT
SCALE: NONE

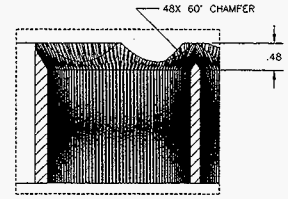

VIEW H
SCALE: NONE

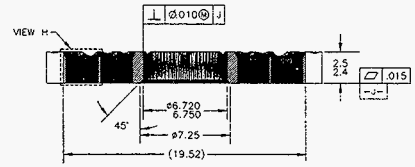

SEE SHEET 1 FOR GENERAL NOTES

HNF-SD-SNF-DR-003, Rev. 0
Appendix 1
MCO Drawings

1-24

DWG NO	TITLE	REF NUMBER	TITLE
	DRAWING TRACEABILITY MAT	NEXT USED ON SHEET 2	REFERENCES

REV	DESCRIPTION	REV DATE	ENGR COMPLETE
	REVISIONS		

J D OSTERLOH 6-7-99

U.S. DEPARTMENT OF ENERGY
Richland Operations Office
Duke Engineering & Services Hanford, Inc.

K-BASIN SNF
STORAGE BASKET
MARK 1A

CADFILE 8620108 CADDRGDC W0037A001 13.0.35

F 620108 | DWG NO H-2-828060 | REV 0

PARSONS J & T DRAWING SHEET 1 OF 6

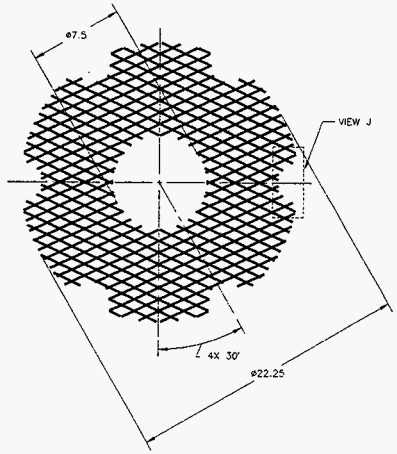

11 SPACER
SCALE: 1/4

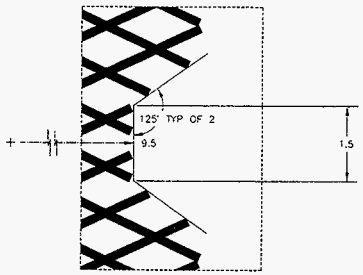

VIEW J
SCALE: 1/1

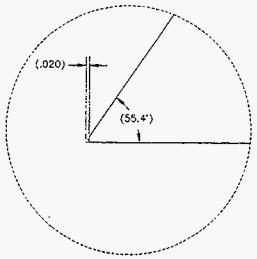

VIEW K
SCALE: 4/1

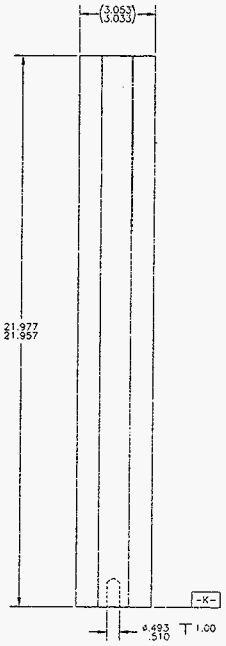

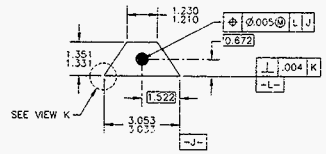

12 OUTSIDE POST
SCALE: 1/2

SEE SHEET 1 FOR GENERAL NOTES

HNF-SD-SNF-DR-003, Rev. 0
Appendix 1
MCO Drawings

DWG NO	TITLE	REF NUMBER	TITLE
	DRAWING TRACEABILITY LIST	NEXT USED ON	SHEET 1

NO	DESCRIPTION	ENGR	DATE
	REVISIONS		

J D OSTERLOH 5-1-97

U.S. DEPARTMENT OF ENERGY
Richland Operations Office
Duke Engineering & Services Hanford, Inc.

K-BASIN SNF
STORAGE BASKET
MARK 1A

F 620108 | H-2-828060 | 0

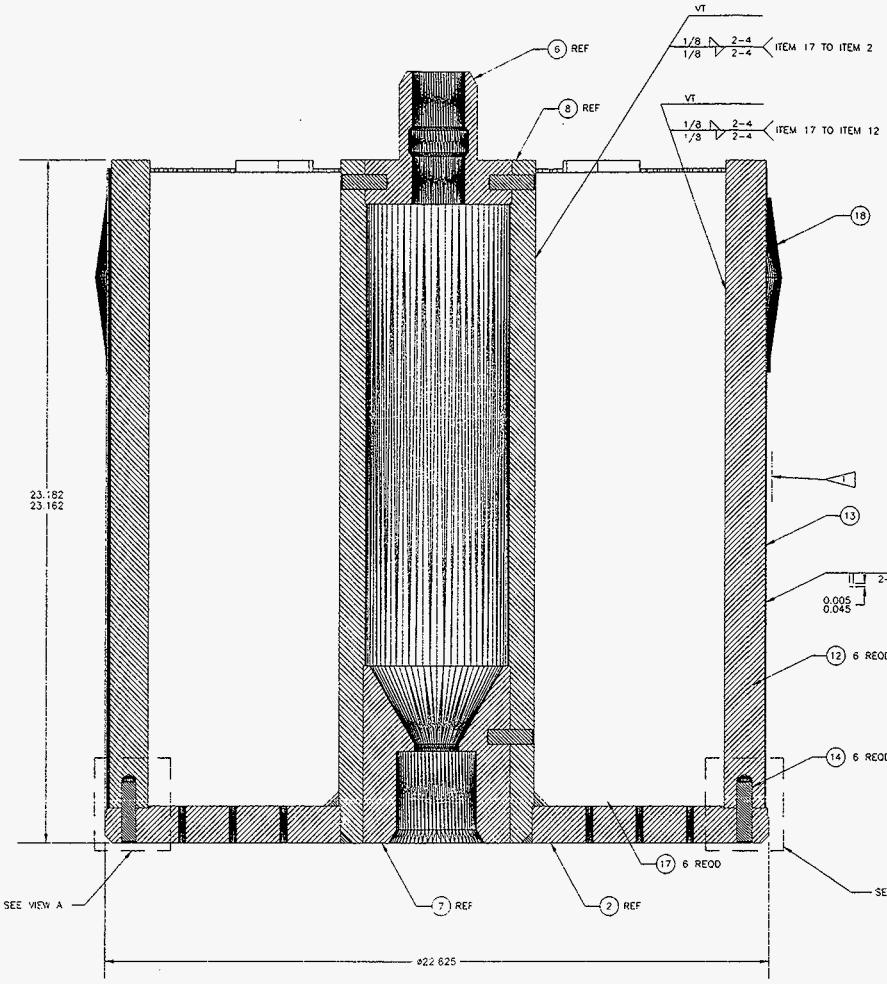

1 ASSEMBLY
SCALE: 1/2

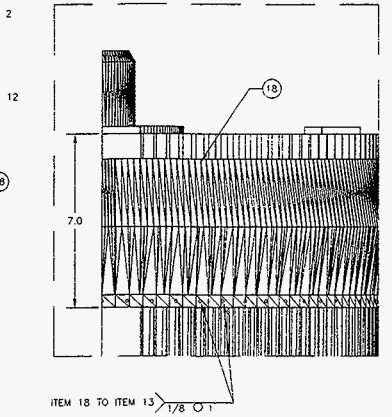

VIEW C, SIDE VIEW OF ASSEMBLY SECTION
SCALE: 1/2

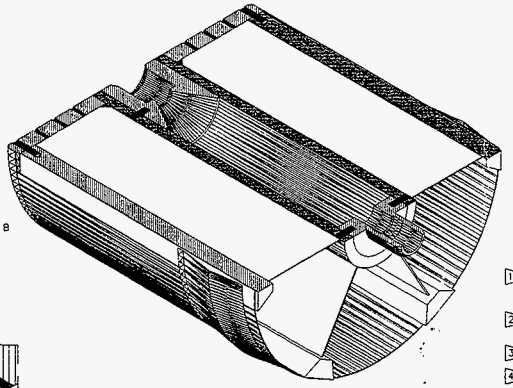

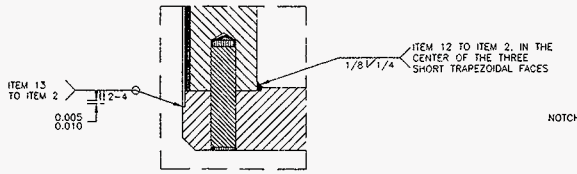

VIEW A
SCALE: 1/1

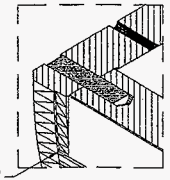

3D VIEW B
SCALE: NONE

PART/MATERIAL LIST

QUANTITY REQUIRED -040	-030	-020	-010	PART/DASH NUMBER	NOMENCLATURE/DESCRIPTION	MATERIAL/REFERENCE	SHEET	ITEM NO.
			X	-010	ASSEMBLY		1	1
		X	1	-020	SUBASSEMBLY, CENTER POST & BASEPLATE		2	2
	X	1		-030	SUBASSEMBLY, CENTER POST		2	3
								4
								5
	1			-006	CENTER COUPLING, BAR ROUND ø 5" X 4.5"L	SA-479 TP 304L SST	3	6
	1			-007	CENTER BUSHING, BAR ROUND ø 5" X 6"L	SA-479 TP 304L SST	3	7
	1			-008	CENTER POST, PIPE ø 6" SCHD XXS (0.864 WALL) SMLS	SA-312 TP 304L SST	3	8
		1		-009	BOTTOM PLATE 1.125" THK ø 24"	SA-240 TP 304L SST	4	9
								10
								11
			6	-012	OUTSIDE POST, CUSTOM TRAPEZOID	ASTM-240 TP 304N SST	5	12
			AR	-013	SHROUD, SHEET METAL 18 GA (.048" THK) X 22" X 71"L	ASTM A-240 304L SST	1	13
			6	-014	.500 COILED TYPE SPRING PIN X 2.0" LONG	SAE J0302 OR J0304 ASME B18.8.2, 1994	–	14
	5			-015	.500 COILED TYPE SPRING PIN X 1.5" LONG	SAE J0302 OR J0304 ASME B18.8.2, 1994	–	15
								16
			6	-017	DIVIDER, SHEET METAL 12GA(.105" THK) X 6.45" X 21.5"	ASTM A-240 TP 304L SST	5	17
			AR	-018	SEAL, SHEET METAL 30GA(.0125" THK) X 6" X 71"	ASTM A-240 TP 304L SST	5	18

GENERAL NOTES:

1. ALL PARTS AND MATERIAL AS SPECIFIED OR ENGINEERING APPROVED EQUAL.
2. ABBREVIATIONS ARE IN ACCORDANCE WITH ANSI Y1.1-72.
3. WELDING SYMBOLS ARE IN ACCORDANCE WITH AWS A2.4-79.
4. SURFACE TEXTURE SYMBOLS ARE IN ACCORDANCE WITH ANSI Y14.36-78 SURFACE TEXTURE VALUES ARE IN MICROINCHES AND ARE IN ACCORDANCE WITH ANSI B46.1-85.
5. ALL UNSPECIFIED MACHINED SURFACES SHALL BE $\sqrt{}^{125}$ OR BETTER
6. REMOVE ALL BURRS AND BREAK ALL SHARP EDGES.
7. ALL UNSPECIFIED MACHINE TOOL RADII SHALL BE .03 MAXIMUM.
8. WELDED SURFACES SHALL BE SMOOTH AND UNIFORM IN APPEARANCE WITHOUT ABRUPT CHANGES IN CONTOUR.
9. DIMENSIONING AND TOLERANCING SHALL BE PER ANSI Y14.5M-1982. DIMENSIONS ARE IN INCHES AND APPLY AT 72°F UNLESS OTHERWISE SPECIFIED. UNSPECIFIED TOLERANCES SHALL BE:
   - DECIMAL: .X ± .1, .XX ± .03, .XXX ± .010
   - ANGULAR: ± 1°
   - ALL IMPLIED 90° ANGLES SHALL BE PERPENDICULAR WITHIN THE GREATEST TOLERANCE OF THE LINEAR DIMENSION.
   - ALL COAXIAL FEATURES SHALL BE CONCENTRIC WITHIN ø.003 UNLESS OTHERWISE SPECIFIED.
10. APPROXIMATE WEIGHT = 412 LB.
11. FABRICATION, WELDING AND INSPECTION SHALL BE IN ACCORDANCE WITH ASME SECTION III DIVISIONAL SUBSECTION NG AND SECTION IX.
12. MATE PARTS IN ACCORDANCE WITH, INTERFERENCE LOCATIONAL FITS PER ANSI B4.1-1967, R1979.
13. ADDITIONAL FABRICATION REQUIREMENTS ARE IN HNF-S-0453, FABRICATION SPECIFICATION FOR MULTI-CANISTER OVERPACK.
14. PIECE / PART TOLERANCES ON THESE DRAWINGS SHOULD LEND TO ACCEPTABLE ASSEMBLY GEOMETRIES. ALTERNATE PIECE / PART TOLERANCES MAY BE UTILIZED WITH THE BUYER'S APPROVAL. ACCEPTABLE FINAL ASSEMBLY GEOMETRIES ARE SHOWN IN THE FABRICATION SPECIFICATION'S CRITICAL DIMENSION TABLES / SKETCHES. IN THE EVENT THAT THERE IS A CONFLICT BETWEEN THE CRITICAL DIMENSION TABLES / SKETCHES AND THE DESIGN DRAWINGS, THE BUYER SHALL BE NOTIFIED FOR RESOLUTION.

NOTES:

1. IDENTIFY PER SECTION 6.4.3 OF HNF-S-0453, FABRICATION SPECIFICATION FOR MULTI-CANISTER OVERPACK, WITH SERIAL NUMBER IN APPROX. LOCATION SHOWN
2. MACHINE BOTTOM SURFACE OF ITEMS (8) AND (9) FLUSH WITH BOTTOM SURFACE OF PREASSEMBLED ITEM (7) AFTER WELDING.
3. ø $^{.493}_{.510}$ ⊤0.70 INTO (6) AND (7) RESPECTIVELY. LOCATE FROM (8) AT ASSEMBLY.
4. COAT CONTACT SURFACES OF MATING PARTS WITH NEOLUBE (GRAPHITE/ALCOHOL) BEFORE ASSEMBLY.
5. SUGGESTED PIECE TOLERANCE MAY BE ADJUSTED BY NO MORE THAN ±0.005 AS LONG AS AN ANSI B4.1-1967 INTERFERANCE LOCATIONAL FIT CLASS LN-2 IS OBTAINED.
6. WELDING AND NDE SHALL BE IN ACCORDANCE WITH ASME B&PV CODE, 1995 EDITION, SECTION III, DIVISION 1, SUBSECTION NG.
7. BASEPLATE HOLES FOR THE ATTACHMENT OF THE SIDEPOSTS MAY BE DRILLED BEFORE OR AFTER ASSEMBLY OF THE BASEPLATE AND THE CENTER POST, AS LONG AS THE SPECIFIED LOCATIONAL TOLERANCE OF THESE HOLES IS MET ON THE SUBASSEMBLY.

1-26

HNF-SD-SNF-DR-003, Rev. 0
Appendix 1
MCO Drawings

DWG NO	TITLE	REF NUMBER	TITLE
	DRAWING TRACEABILITY LIST	HNF-SD-SNF-DL-2-828041	CANISTER DRAWING LIST
			RECEIVING INSPECTION PLAN

NO	REV	DESCRIPTION	DATE	ENGR
		REVISIONS		

J. O. OSTERLOH 5-13-97

U.S. DEPARTMENT OF ENERGY
Richland Operations Office
Duke Engineering & Services Hanford, Inc.

K-BASIN SNF
SCRAP BASKET
MARK 1A

F 620108 | SIZE D | DWG NO H-2-828065 | REV 0

SHEET 1 OF 5

3 SUBASSEMBLY, CENTER POST
SCALE: 1/4

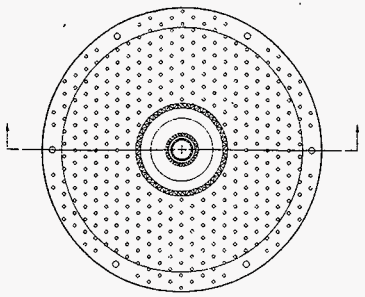

2 SUBASSEMBLY, CENTER POST & BASEPLATE
SCALE: 1/4

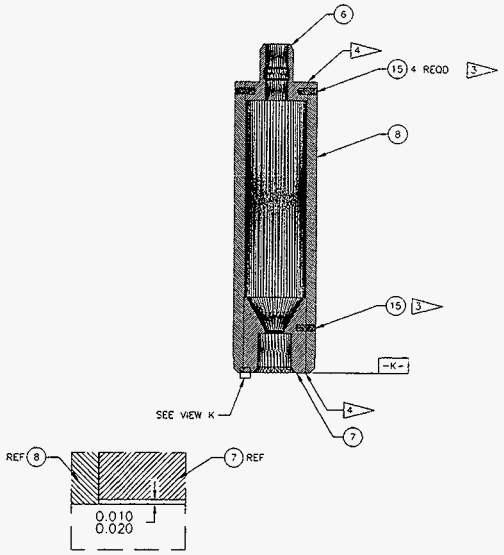

VIEW K
SCALE: NONE

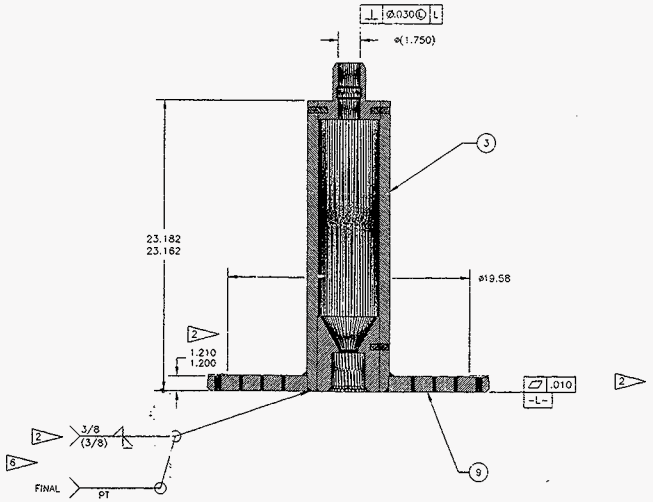

SEE SHEET 1 FOR GENERAL NOTES

HNF-SD-SNF-DR-003, Rev. 0
Appendix 1
MCO Drawings

1-27

DWG NO	TITLE	REF NUMBER	TITLE
DRAWING TRACEABILITY LIST		NEXT USED ON SHEET 1	REFERENCES

REVISIONS

CADFILE B8280658 CADCODE W:N95:ACD3:13.0:SS

DRAWN J. D. OSTERLOH 5-7-97
CHECKED
DESIGN ENGR
DESIGN ADVT PARSONS I & T, INC.

U.S. DEPARTMENT OF ENERGY
Richland Operations Office
Duke Engineering & Services Hanford, Inc.

K-BASIN SNF
SCRAP BASKET
MARK 1A

F 620108 H-2-828065 0

SCALE SHOWN SHEET 2 OF

DWG NO H-2-828065 SH 2 OF REV 0

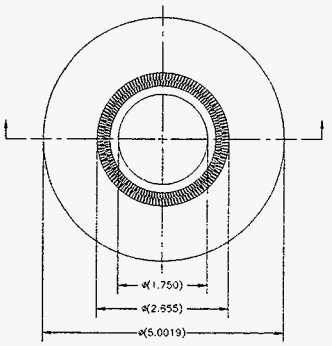

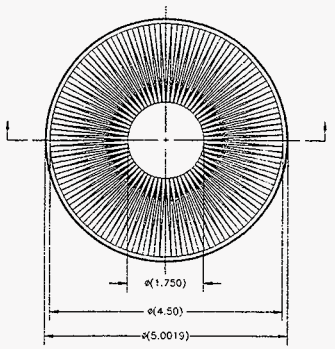

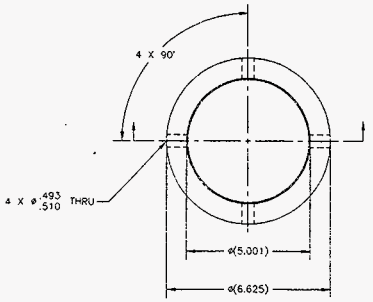

8 CENTER POST
SCALE: 1/2

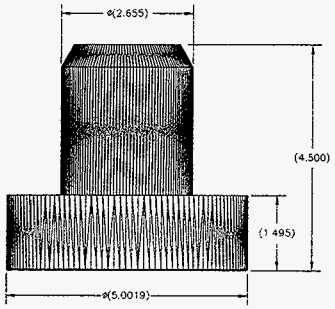

6 CENTER COUPLING
SCALE: 1/1

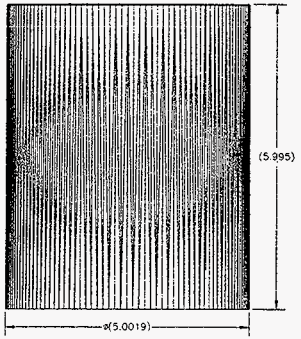

7 CENTER BUSHING
SCALE: 1/1

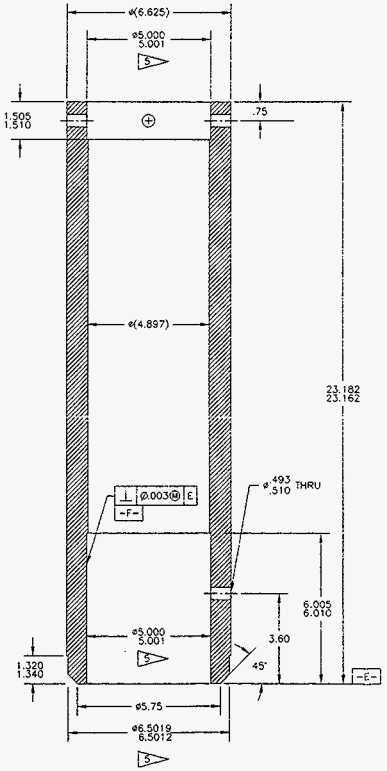

SEE SHEET 1 FOR GENERAL NOTES

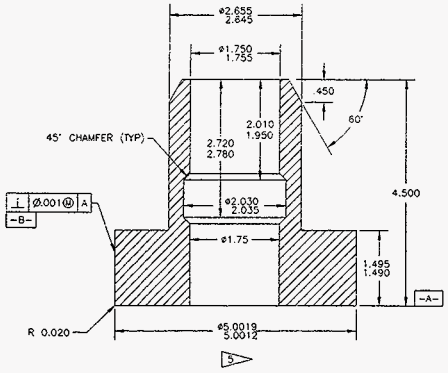

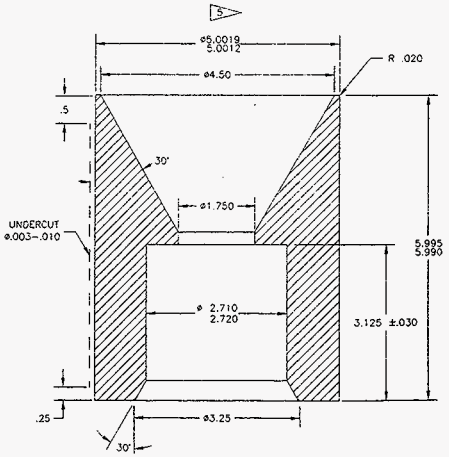

HNF-SD-SNF-DR-003, Rev. 0
Appendix 1
MCO Drawings

1-28

DWG NO	TITLE	REF NUMBER	TITLE
	DRAWING TRACEABILITY LIST	NEXT USED ON SHEET 2	REFERENCES

REVISIONS					
NO	BY	DESCRIPTION	DATE	CHK	COMPAN
		CADFILE B828065C CADCODE WINDFACO1\13.0.SE			

DRAWN	J. D. OSTERLOH	5-7-97
CHECKED		
ENG APP		
DES APP		
QUALITY		
SAFETY		
ENVIRO		
PROJ		
DESIGN AGENT	BARTORE L & I, INC	

U.S. DEPARTMENT OF ENERGY
Richland Operations Office
Duke Engineering & Services Hanford, Inc.

K-BASIN SNF
SCRAP BASKET
MARK 1A

FSK NO	DWG NO	REV
F 620108	H-2-828065	0

SIZE 3 SHEET 2

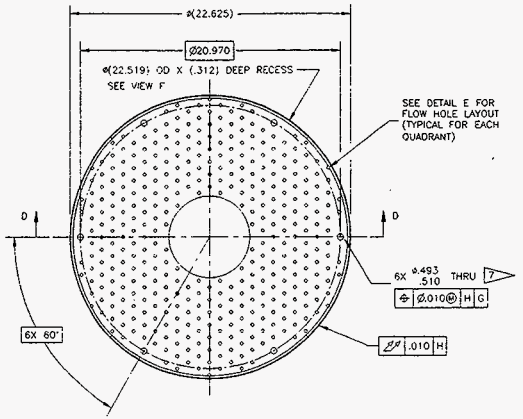

9 BOTTOM PLATE
SCALE: 1/4

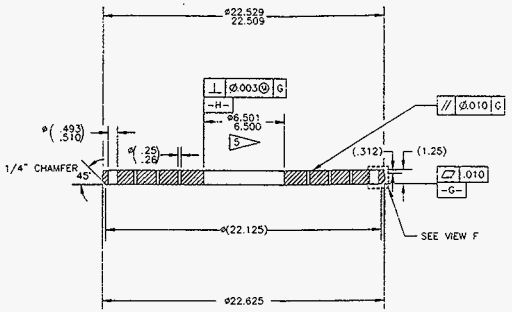

SECTION D-D
SCALE: 1/4

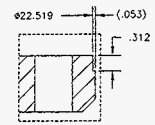

VIEW F
SCALE: 1/1

FLOW HOLE LAYOUT

ROWS		COLUMNS													
		#	AA	A	B	C	D	E	F	G	H	I	J	K	L
#	Y=	X=	0.00	0.87	1.73	2.60	3.46	4.33	5.20	6.06	6.93	7.79	8.66	9.53	10.39
22	11.00		X												
21	10.50			X		X									
20	10.00		X		X		X								
19	9.50			X		X									
18	9.00		X		X		X								
17	8.50			X		X		X							
16	8.00		X		X		X		X		X				
15	7.50			X		X		X		X		X			
14	7.00		X		X		X		X		X				
13	6.50			X		X		X		X		X			
12	6.00		X		X		X		X		X		X		
11	5.50			X		X		X		X		X		X	
10	5.00		X		X		X		X		X		X		
9	4.50			X		X		X		X				X	
8	4.00		X		X		X		X		X		X		
7	3.50			X		X		X		X		X		X	
6	3.00						X		X		X		X		X
5	2.50					X		X		X		X		X	
4	2.00						X		X		X		X		X
3	1.50							X		X		X		X	
2	1.00						X		X		X		X		
1	0.50							X		X		X		X	
0	0.00								X		X		X		

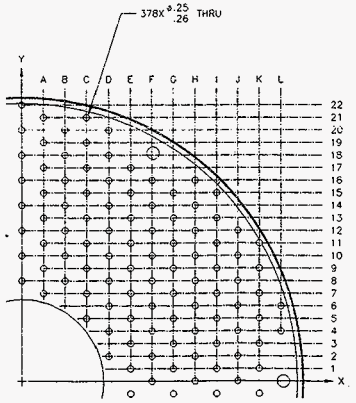

E FLOW HOLE LAYOUT
SCALE: NONE

SEE SHEET 1 FOR GENERAL NOTES

HNF-SD-SNF-DR-003, Rev. 0
Appendix 1
MCO Drawings

1-29

DWG NO	TITLE	REF NUMBER	TITLE
DRAWING TRACEABILITY LIST		NEXT USED ON	REFERENCES
			SHEET 2

REVISIONS

CADFILE B828065D CADCODE WIN95:ACD3:13.0:SS

J D OSTERLOH 5-7-97

U.S. DEPARTMENT OF ENERGY
Richland Operations Office
Duke Engineering & Services Hanford, Inc.

K-BASIN SNF
SCRAP BASKET
MARK 1A

F 620108 H-2-828065 0

PARSONS I & T, INC. SCALE SHOWN SHEET 4

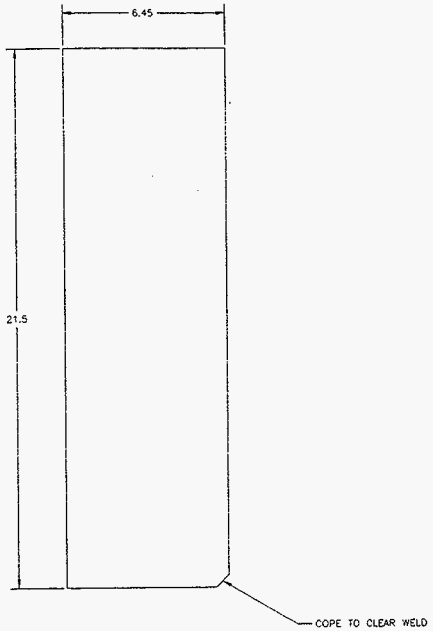

17 DIVIDER
SCALE: 1/2

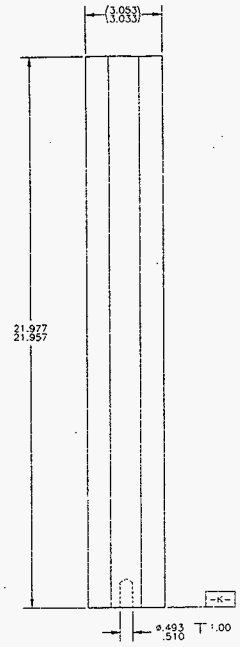

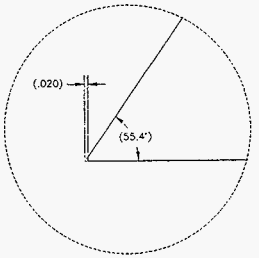

VIEW L
SCALE: 4/1

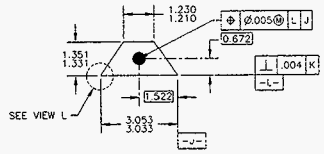

12 OUTSIDE POST
SCALE: 1/2

SEE SHEET 1 FOR GENERAL NOTES

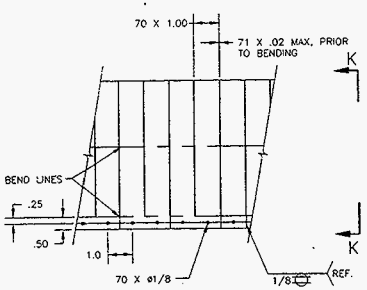

18 SEAL
SCALE: 1/2

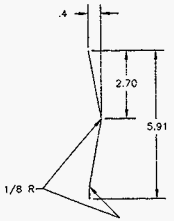

VIEW K-K
SCALE: 1/2

HNF-SD-SNF-DR-003, Rev. 0
Appendix 1
MCO Drawings

1-30

DWG NO	TITLE	REF NUMBER	TITLE
DRAWING TRACEABILITY LIST		NEXT USED ON SHEET 1	REFERENCES

REVISIONS

CADFILE B828065E CADCODE WIN95-AC03:13.0:SS

J O OSTERLOH

U.S. DEPARTMENT OF ENERGY
Richland Operations Office
Duke Engineering & Services Hanford, Inc.

K-BASIN SNF
SCRAP BASKET
MARK 1A

F 620108 H-2-828065 0

PARSONS I & T, INC. SCALE SHOWN SHEET 5

2 PLOT SCALE: 1=1

GTITLE.DWG (10/96)

PARTS/MATERIAL LIST

QTY REQD -020	QTY REQD -010	PART/DASH NUMBER	NOMENCLATURE/DESCRIPTION	MATERIAL/REFERENCE	SHEET	ITEM NO.
		-010	ASSEMBLY		1	1
	1	-020	BASE PLATE ASSEMBLY		2	2
						3
						4
	1	-001	CENTER POST, TUBING, ø2.75 O.D. X .500 WALL	ASTM A-269 GR TP 304 OR 304L SST	3	5
	6	-002	BAR, ROUND ø1 1/4	ASTM A-276 GR TP 304 OR 304L SST	3	6
						7
						8
	1		SHEET METAL, 18 GA (.05 THK), 11X 71"L	ASTM A-240 GR TP 304 OR 304L SST		9
1			PLATE, 3" THK	ASTM A-240 GR TP 304 OR 304L SST		10
1			RING, .375 X 22.375 OD X 19.875 ID	ASTM A-240 GR TP 304 OR 304L SST		11
AR			BAR, FLAT 1/4" X 3/8"	ASTM A-240 GR TP 304 OR 304L SST		12

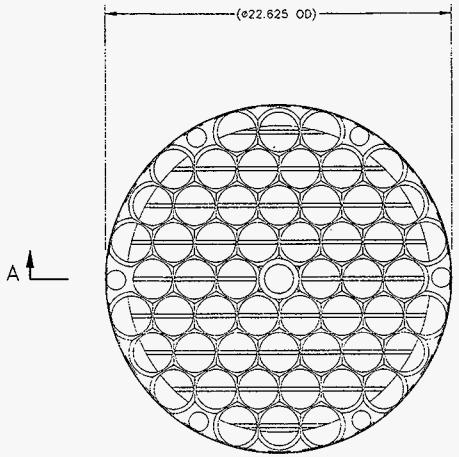

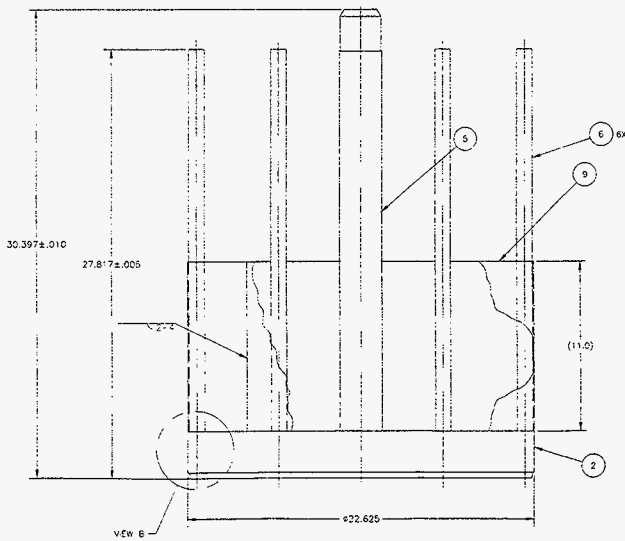

1 ASSEMBLY
SCALE: 1/3

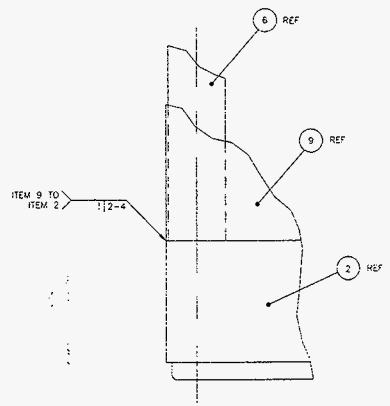

VIEW B
SCALE: FULL

GENERAL NOTES: (UNLESS OTHERWISE SPECIFIED)

1. ABBREVIATIONS ARE IN ACCORDANCE WITH ASME Y1.1-72.
2. WELDING SYMBOLS ARE IN ACCORDANCE WITH AWS A2.4-79.
3. SURFACE TEXTURE SYMBOLS ARE IN ACCORDANCE WITH ANSI/ASME Y14.36-78. SURFACE TEXTURE VALUES ARE IN MICROINCHES AND ARE IN ACCORDANCE WITH ANSI/ASME B46.1-85.
4. TOLERANCES: DECIMAL: .X= ±.06, .XX= ±.03, .XXX = ±.010
   FRACTIONS: ± 1/16
   ANGULAR: ± 1°
   ALL COAXIAL FEATURES SHALL BE CONCENTRIC WITHIN ø.010
5. ALL MACHINED SURFACES SHALL BE 125 OR BETTER IN ACCORDANCE WITH ANSI B46.1-85.
6. REMOVE ALL BURRS AND BREAK ALL SHARP EDGES TO .03 MAXIMUM.
7. ALL UNSPECIFIED MACHINE TOOL RADII SHALL BE .03 MAXIMUM.
8. WELDED SURFACES SHALL BE SMOOTH AND UNIFORM IN APPEARANCE WITHOUT ABRUPT CHANGES IN CONTOUR.
9. CALCULATED WEIGHT = 199 LB.
10. MATERIAL, FABRICATION, WELDING AND INSPECTION SHALL BE IN ACCORDANCE WITH ASME SECTION III, DIVISION 1, SUBSECTION NG.

11 MATE PARTS IN ACCORDANCE WITH A LN2 INTERFERENCE LOCATIONAL FIT PER ANSI B4.1-1967, R1979.

12 MATE PARTS IN ACCORDANCE WITH A LC8 CLEARANCE LOCATIONAL FIT PER ANSI B4.1-1967, R1979. BREAK SHARP EDGE OF ID RIM .02-.06 ON ONE SIDE TO EASE IN ASSEMBLY.

13. ADDITIONAL FABRICATION REQUIREMENTS ARE IN HNF-S-0453, FABRICATION SPECIFICATION FOR MULTI-CANISTER OVERPACK.
14. PIECE / PART TOLERANCES ON THESE DRAWINGS SHOULD LEND TO ACCEPTABLE ASSEMBLY GEOMETRIES. ALTERNATE PIECE / PART TOLERANCES MAY BE UTILIZED WITH THE BUYER'S APPROVAL. ACCEPTABLE FINAL ASSEMBLY GEOMETRIES ARE SHOWN IN THE FABRICATION SPECIFICATION'S CRITICAL DIMENSION TABLES / SKETCHES. IN THE EVENT THAT THERE IS A CONFLICT BETWEEN THE CRITICAL DIMENSION TABLES / SKETCHES AND THE DETAIL DRAWINGS, THE BUYER SHALL BE NOTIFIED FOR RESOLUTION.

DWG NO	TITLE
H-2-828053	MCO BASKET SUPPORT PLATE
H-2-828052	MCO PROCESS TUBE GUIDE CONE
H-2-828051	MCO PROCESS TUBE
H-2-828050	MCO BASKET STABILIZER EXTENSION
H-2-828045	MCO SHIELD PLUG
REF NUMBER	TITLE

DRAWING TRACEABILITY LIST — REFERENCES — NEXT USED ON H-2-828041

NO	DESCRIPTION	DATE	CHKD

REVISIONS

CADFILE 38280704 CADCODE WIN95-ACD2-13.0-SS

HNF-SD-SNF-DR-003, REV. 0
APPENDIX 1
MCO DRAWINGS **1-31**

BECHTEL — U.S. DEPARTMENT OF ENERGY
Richland Operations Office
Duke Engineering & Services Hanford, Inc.

MCO MARK IV SNF STORAGE BASKET

F620108 H-2-828070 0

PARSONS 1 & 2 INC 1 MAY SHOWN TOP

2 PLOT SCALE: 1=1 — 1 GTITLE.DWG (10/96)

4 OF 4 H-2-828070 REV 0 SH 1 OF 3

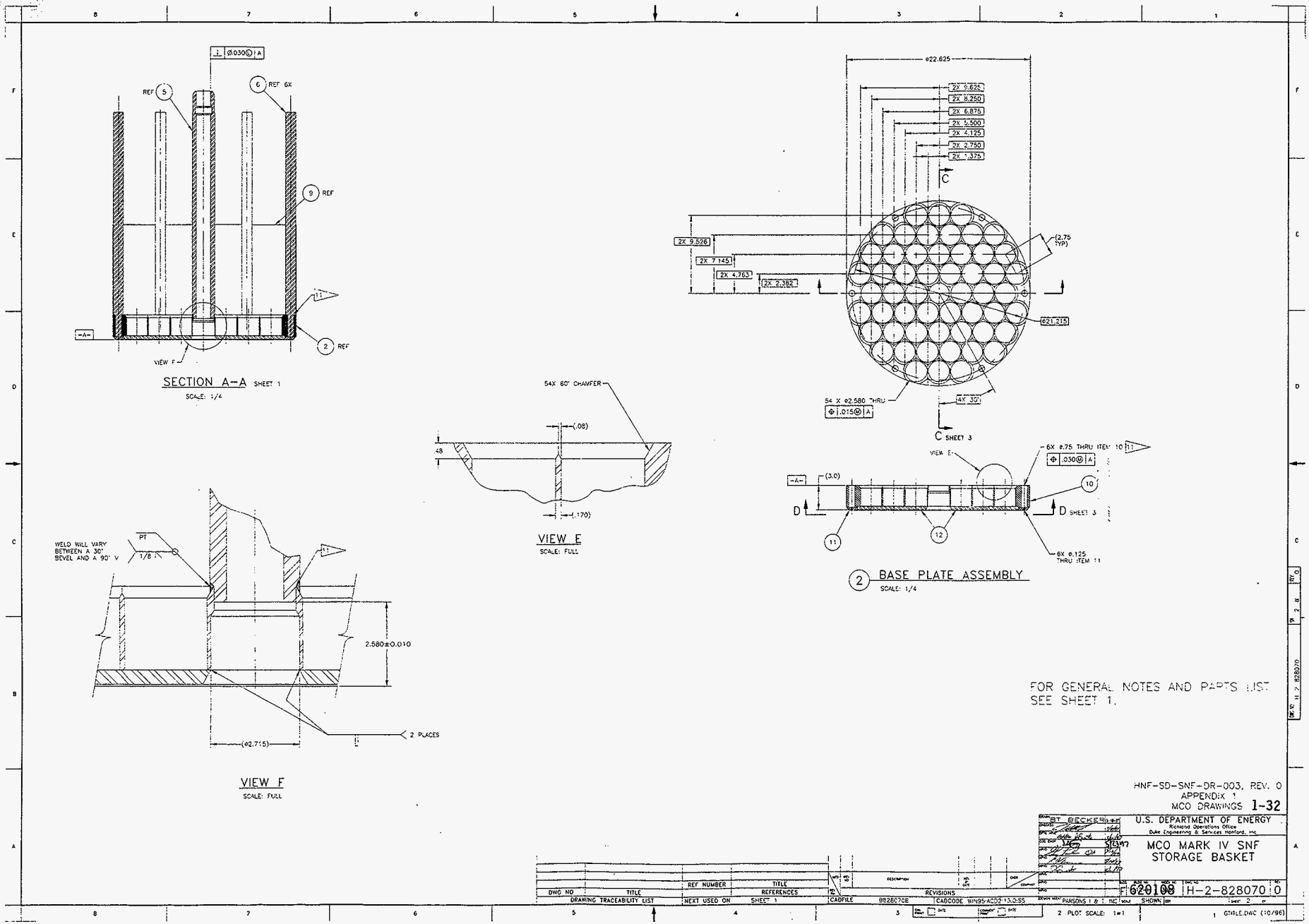

SECTION A-A SHEET 1
SCALE: 1/4
REF 5
6 REF 6X
9 REF
2 REF
VIEW F
Ø.030Ⓢ A
-A-
VIEW E
SCALE: FULL
54X 60° CHAMFER
(.08)
.48
(.170)
VIEW F
SCALE: FULL
WELD WILL VARY BETWEEN A 30° BEVEL AND A 90° V
PT
1/8
2.580±0.010
2 PLACES
(ø2.715)
ø22.625
2X 9.625
2X 8.250
2X 6.875
2X 5.500
2X 4.125
2X 2.750
2X 1.375
C
2X 9.526
2X 7.145
2X 4.763
2X 2.382
(2.75 TYP)
ø21.215
54 X ø2.580 THRU
.015Ⓜ A
4X 30°
C SHEET 3
VIEW E
6X ø.75 THRU ITEM 10
.030Ⓜ A
(3.0)
D
D SHEET 3
6X ø.125 THRU ITEM 11
2 BASE PLATE ASSEMBLY
SCALE: 1/4
FOR GENERAL NOTES AND PARTS LIST SEE SHEET 1.
HNF-SD-SNF-DR-003, REV. 0
APPENDIX 1
MCO DRAWINGS 1-32
U.S. DEPARTMENT OF ENERGY
Richland Operations Office
Duke Engineering & Services Hanford, Inc.
MCO MARK IV SNF STORAGE BASKET
BT BECKER
F 620108 H-2-828070 0
DWG NO
TITLE
REF NUMBER
TITLE
REFERENCES
DRAWING TRACEABILITY LIST
NEXT USED ON
SHEET 1
REVISIONS
CADFILE
B828070B
CADCODE
PARSONS I & T INC
SCALE
SHOWN
2 PLOT SCALE: 1=1
GTITLE.DWG (10/96)

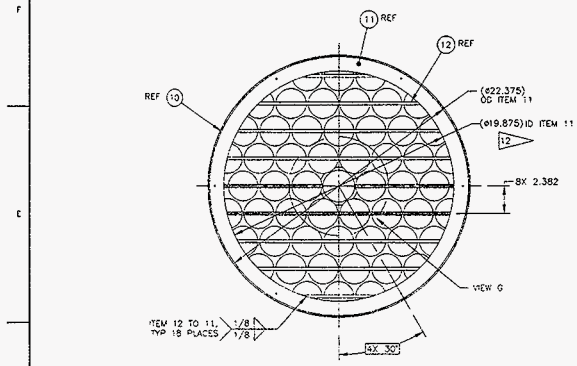

VIEW D-D SHEET 2
SCALE: 1/4

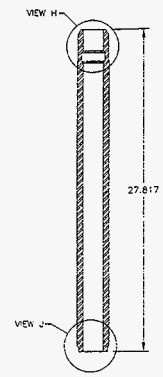

5 CENTER POST
SCALE: 1/4

6 ROUND BAR
SCALE: 1/4

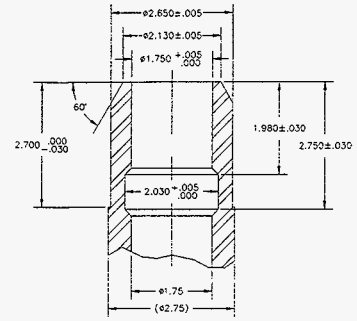

VIEW H
SCALE: FULL

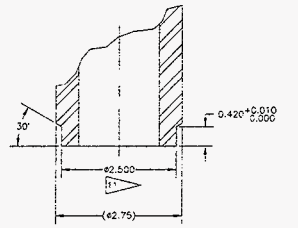

VIEW J
SCALE: FULL

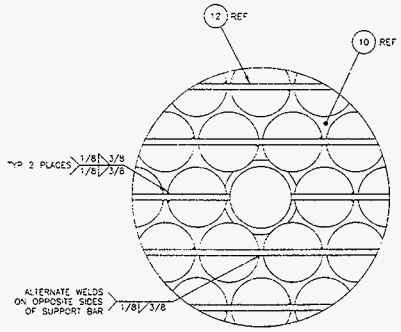

VIEW G
SCALE: 1/2

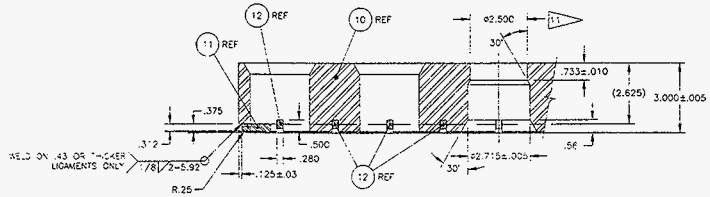

SECTION C-C SHEET 2
ROTATED 90° CCW
SCALE: 1/2

FOR GENERAL NOTES AND PARTS LIST SEE SHEET 1.

HNF-SD-SNF-DR-003, REV. 0
APPENDIX 1
MCO DRAWINGS 1-33

DWG NO	TITLE	REF NUMBER	TITLE
DRAWING TRACEABILITY LIST		NEXT USED ON	REFERENCES SHEET 2

REVISIONS

CADFILE B828070C CADCODE WN95/ACD2 13.0:SS

BT BECKER

U.S. DEPARTMENT OF ENERGY
Richland Operations Office
Duke Engineering & Services Hanford, Inc.

MCO MARK IV SNF STORAGE BASKET

F 620108 H-2-828070 0

PARSONS 1 & T, INC. SCALE SHOWN SHEET 3

2 PLOT SCALE: 1=1 GTITLE.DWG (10/96)

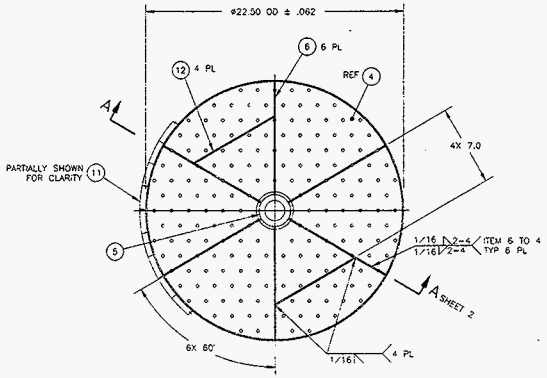

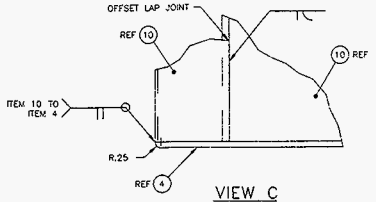

VIEW C
SCALE: 1/2

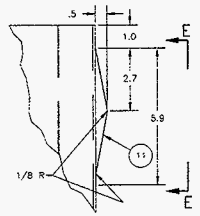

VIEW D
SCALE: 1/2

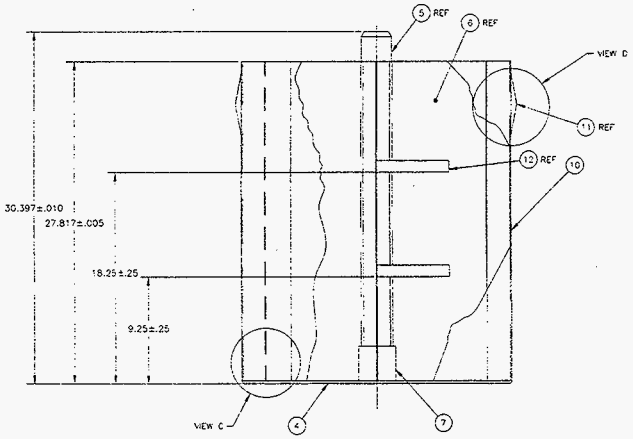

1 ASSEMBLY
SCALE: 1/4

ITEM 10 PARTIALLY SHOWN FOR CLARITY

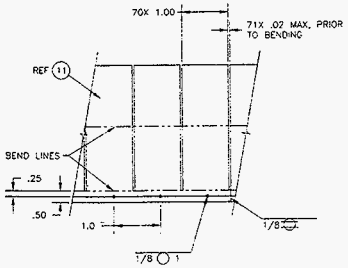

VIEW E-E
SCALE: 1/2

PARTS/MATERIAL LIST

QTY PER ITEM -020	-010	PART/DASH NUMBER	NOMENCLATURE/DESCRIPTION	MATERIAL/REFERENCE	SHEET	ITEM NO
	X	-010	ASSEMBLY		1	1
						2
						3
	1	-001	BASE PLATE, ø22.5 OD	SEE NOTE 11	2	4
	1	-002	CENTER TUBING, ø2.75 OD X .500 WALL	ASTM A-269 GR TP 304 OR 304L SST	2	5
	6	-003	BASKET DIVIDER, 12 GA (.109)	ASTM A-240 GR TP 304 OR 304L SST	2	6
	1	-004	LOWER COLLAR, ø3.50 OD	ASTM A-269 GR TP 304 OR 304L SST	2	7
						8
						9
	1		SHEET METAL, 12 GA (.109), 27.57X 71 L	ASTM A-240 GR TP 304 OR 304L SST		10
	1		SHEET METAL, 30 GA (.0125), 6X 71 L	ASTM A-240 GR TP 304 OR 304L SST		11
	4		SHEET METAL, 12 GA (.109), 1X (9) L	ASTM A-240 GR TP 304 OR 304L SST		12

GENERAL NOTES: (UNLESS OTHERWISE SPECIFIED)

1. ABBREVIATIONS ARE IN ACCORDANCE WITH ASME Y1.1-72.
2. WELDING SYMBOLS ARE IN ACCORDANCE WITH AWS A2.4-79.
3. SURFACE TEXTURE SYMBOLS ARE IN ACCORDANCE WITH ANSI/ASME Y14.36-78. SURFACE TEXTURE VALUES ARE IN MICROINCHES AND ARE IN ACCORDANCE WITH ANSI/ASME B46.1-85.
4. TOLERANCES: DECIMAL: .X= ±.06, .XX= ±.03, .XXX = ±.010
   FRACTIONS: ± 1/16
   ANGULAR: ± 1°
5. ALL MACHINED SURFACES SHALL BE 125 V OR BETTER IN ACCORDANCE WITH ANSI B46.1-85.
6. REMOVE ALL BURRS AND BREAK ALL SHARP EDGES TO .03 MAXIMUM.
7. ALL UNSPECIFIED MACHINE TOOL RADII SHALL BE .03 MAXIMUM.
8. MATERIALS, FABRICATION, WELDING AND INSPECTION SHALL BE IN ACCORDANCE WITH ASME SECTION III, DIVISION 1, SUBSECTION NG.
9. APPROXIMATE WEIGHT = 165 LB.
10. WELD AND INSPECT PER HS-V-S-0013 PT FINAL PASS.
11. PERFORATED PLATE 1/4" THK, W/ø1/4" X 1 1/2" CENTER STAGGERED PATTERN SST 304 (McNICHOLS CO.).
12. PLUG WELDS UTILIZING EQUIVALENT WELD AREAS MAY REPLACE FILLET WELDS
13. ADDITIONAL FABRICATION REQUIREMENTS ARE IN WHC-S-0453, FABRICATION SPECIFICATION FOR MULTI-CANISTER OVERPACK.
14. PIECE / PART TOLERANCES ON THESE DRAWINGS SHOULD LEND TO ACCEPTABLE ASSEMBLY GEOMETRIES. ALTERNATE PIECE / PART TOLERANCES MAY BE UTILIZED WITH THE BUYER'S APPROVAL. ACCEPTABLE FINAL ASSEMBLY GEOMETRIES ARE SHOWN IN THE FABRICATION SPECIFICATION'S CRITICAL DIMENSION TABLES / SKETCHES. IN THE EVENT THAT THERE IS A CONFLICT BETWEEN THE CRITICAL DIMENSION TABLES / SKETCHES AND THE DESIGN DRAWINGS, THE BUYER SHALL BE NOTIFIED FOR RESOLUTION.

HNF-SD-SNF-DR-003, REV. 0
APPENDIX 1
MCO DRAWINGS **1-34**

DRAWING TRACEABILITY LIST			
DWG NO	TITLE	REFERENCES	
		NEXT USED ON	H-2-82804
	REF NUMBER	TITLE	
	H-2-828045	MCO SHIELD PLUG	
	H-2-82805C	MCO BASKET STABILIZER EXTENSION	
	H-2-82805	MCO PROCESS TUBE	
	H-2-828052	MCO PROCESS TUBE GUIDE CONE	
	H-2-828053	MCO BASKET SUPPORT PLATE	

REVISIONS					
LTR	DESCRIPTION	DATE	ENGR	DRAFT	CHK
0					

CADFILE B828075A CADCODE WIN95:ACD2:13.0:SS

PARSONS I & T, INC. SHOWN 1:1

2 PLOT SCALE: 1=1

1 GTITLE.DWG (10/96)

BT BECKER 5/2/97

U.S. DEPARTMENT OF ENERGY
Richland Operations Office
Duke Engineering & Services Hanford, Inc

MCO MARK IV SNF SCRAP BASKET

620108 H-2-828075 0

SHEET 1 OF 2

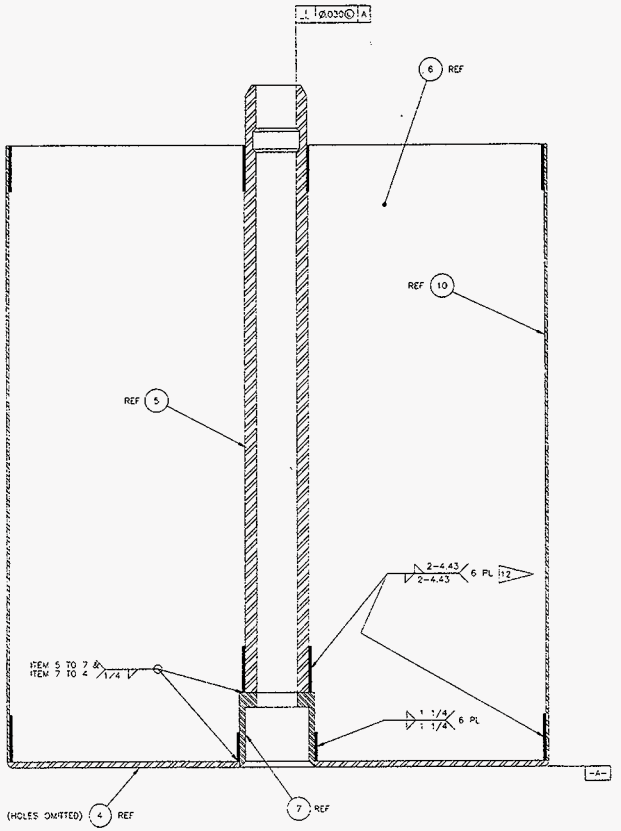

SECTION A-A SHEET 1
SCALE: 1/2
ROTATED 30° CCW

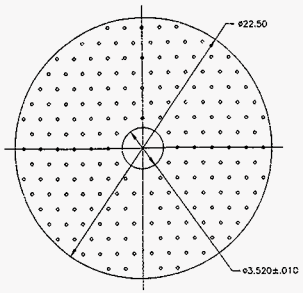

4 BASE PLATE
SCALE: 1/4

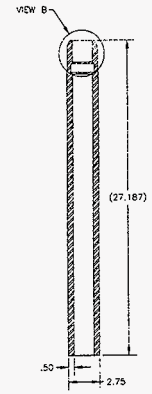

5 CENTER TUBE
SCALE: 1/4

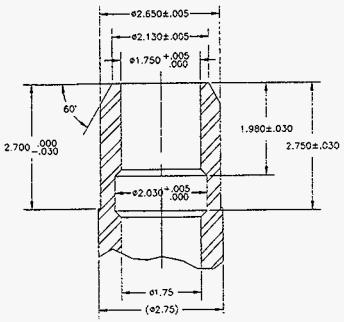

VIEW B
SCALE: FULL

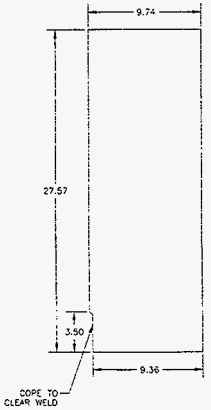

6 BASKET DIVIDER
SCALE: 1/4

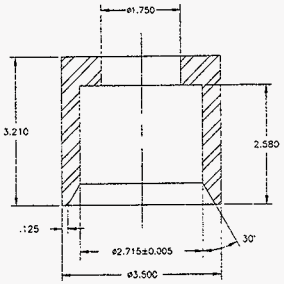

7 LOWER COLLAR
SCALE: FULL

FOR GENERAL NOTES AND PARTS LIST
SEE SHEET 1.

HNF-SD-SNF-DR-003, REV. 0
APPENDIX 1
MCO DRAWINGS 1-35

U.S. DEPARTMENT OF ENERGY
Richland Operations Office
Duke Engineering & Services Hanford, Inc

MCO MARK IV SNF
SCRAP BASKET

BT BECKER
5/27/97

620108 H-2-828075 0

DWG NO	TITLE	REF NUMBER	TITLE
DRAWING TRACEABILITY LIST		NEXT USED ON	REFERENCES
		SHEET 1	

REVISIONS

CADFILE B828075B CADCODE WIN95:ACD2-13.0:SS

PARSONS I & T, INC SCALE SHOWN SHEET 2 OF

2 PLOT SCALE: 1=1

STITLE.DWG (10/96)

MULTI-CANISTER OVERPACK DESIGN REPORT

MATERIAL EVALUATION

MCO MECHANICAL CLOSURE SHIELD PLUG AND LOCKING RING MATERIAL EVALUATION

The MCO Mechanical Closure Shield Plug and locking ring were proposed to be fabricated from ferritic steel. Only SA-508 Grade 4N, Class 3 (formerly Class 4b) is suitable for use under the requirements of the ASME BPVC, Section III, Subsection NB. The Applicable Design Specification, "HNF-S-0426", originally required the application of Regulatory Guide 7.12 and NUREG/CR-3826 to ferritic steel components when greater than 4" thick. The NUREG/CR-3826 requirements are augmented by Regulatory Guide 7.12 such that testing for Nil Ductility Transition (NDT) temperature in accordance with ASTM E208 must be done and a very low NDT temperature of -140 degrees Fahrenheit (for 12-inch thick sections) must be demonstrated. Additionally, the Lowest Service Metal Temperature (LSMT) must be taken as -20 degrees Fahrenheit, regardless of the design parameters. Industry experience indicates that these material requirements are not readily obtained. One large forging manufacturer was contacted to obtain a rough order of magnitude cost estimate and lead time. They stated that they would not bid on such a forging based on recent experience in trying to meet these specific requirements for the U.S. Navy. After extensive efforts to meet the requirements, the manufacturer gave up and subcontracted a foreign manufacturer to supply the material. The cost was high and the experience was such that they would not consider attempting manufacture themselves or supplying the material via their previous overseas supplier. The Regulatory Guide effectively excludes the use of ferritic steels for heavy sections from a practical standpoint of current domestic steel making practices.

The approach in the revised specification is to shed the additional requirements of the Regulatory Guide and use NUREG/CR-3826 as a free standing material requirement. The LSMT for the MCO has been changed to 32 degrees Fahrenheit in Revision 3 of the Performance Specification. Recognizing that the thick sections of the MCO would be subjected to low design stresses, the NUREG approach was reviewed for applicability. The fracture arrest criterion based upon extrapolation of the Pellini fracture toughness reference curve at 0.2 of the yield strength would permit the use of some of the ferritic steels discussed in the NUREG with a reasonable level of assurance that the failure criterion of the material is not exceeded. However, the basis for using such a comparatively liberal criterion must be addressed in light of the Regulatory Guide position. Several potential concerns may be raised. The use of the Pellini curve has several inherent assumptions which may not be suitable for thicker materials or at least difficult to apply with certainty. Other methodologies in the NUREG could be attempted, however, the cost of each is clearly heavily influenced by material examination requirements such as volumetric examination. Such examination could provide additional margin to the methodology based on the extrapolation of the Pellini curve or used for the methodology based on ASME Section XI. Such examination on thick sections is difficult and would not likely produce meaningful results, particularly in a forged component. If possible, such examination would be very expensive.

The NUREG/CR-3826 approach for protecting against brittle fracture is dependent on the users level of acceptable risk and clearly is subject to critical review by the package reviewer.

Another possible approach could be to use the ASME Section III, Subsection NB requirements for material testing. This may also be subject to critical review since the ASME Code was developed for reactor components. As such, it does not address the service conditions which an onsite storage package might be subjected such as impact loading at low temperatures. Regulatory Guide 7.12 and NUREG/CR-3826 form the most justified and accepted set of criteria for heavy sections of ferritic steel for a storage or shipping container for spent nuclear fuel.

The latest revisions of the Performance Specification increased the operating temperatures to be considered and eliminated the requirement of Regulatory Guide 7.12. The raising of the temperature to 0 °C has little influence on the selection of ferritic materials.

Based on the lack of readily available material which meets the Regulatory Guide 7.12 and NUREG/CR-3826 requirements for ferritic steels, a comparison to austenitic stainless steels is warranted. The appropriate base cost components for comparison include forged material cost, rough machining cost, and finish machining cost. NDT temperature testing is only required for the ferritic steel. The additional costs associated with the ferritic steel components when compared to austenitic stainless steels are Post Weld Heat Treatment (PWHT) after plug welding and/or inlay for the seal surfaces and thermal spray or other coating to protect the shield plug from rapid oxidation and hydrogen generation when wet.

Considering the additional material testing and fabrication costs as well as uncertainty in obtaining material with suitable properties, austenitic stainless steel will be used.

The advantages of going with the austenitic stainless is not only in the area of brittle fracture but in the area of corrosion and material compatibility. The austenitic stainless is compatible with the MCO shell which is already required to be type 304L as well as the fuel baskets. The stainless steel has less fewer service related corrosion problems as discussed in Appendix D of the Performance Specification. Another significant advantage of austenitic stainless steel for this application is the reduced maintenance requirements throughout the operations during the life of the package. This also is important during storage prior to handling. Fewer requirements for the protection of threaded and seal surfaces will be required than if a ferritic material was used.

Selection of materials with the same coefficient of thermal expansion eliminates differential thermal expansion and subsequent thermal stresses. This design feature is particularly important during the thermal cycles associated with the Hot Processing operations.

Some of the disadvantages of the material is the reduced strength. The lower allowable strength of the material results is less margin beyond that inherent in the code allowable stresses. However, austenitic stainless steels are inherently tough and plastically deform, absorbing a great deal of energy, before catastrophic failure. Another potential disadvantage of the use of threaded austenitic materials in combination is there tendency to gall when moved under pressure. Proper handling and lubrication practices can prevent galling.

The MCO is constructed mainly out of austenitic stainless steels for the purpose of high corrosion resistance, good cold temperature behavior and high assurance of complying with the required design life in an economical manner. Also due to the large temperature cycles that the package is expected to see, all of the materials should be of the same basic type to preclude differential thermal expansion, which would challenge maintenance of the sealing system. This results in the design of austenitic materials being mated in threaded connections. Historically some difficulties have resulted in this situation due to galling of the materials together. This can result in excessive high torque values and/or insufficient preload.

This condition can be prevented by using smoother surface texture, use of coarse threads, slower wrenching speeds and most importantly good thread lubrication. (*Fastener Standards,* sixth edition) (*An Introduction to the Design and Behavior of Bolted Joints,* John H. Bickford, second edition) There are few restrictions on the use of lubricants on any of the threaded fasteners used on the MCO since none of the fasteners goes into the pool at any time. Also all of the fasteners except the process port valves are outside the pressure boundary. The lubricants must still be functional after being heated to 375°C and not having the capability to offgas after being heated to a minimum of 250°C (hot conditioning). With this in mind high quality lubricants will be used on all threaded surfaces. The lubricant should be a high grade nuclear grade lubricant such as Nickel Never Seize or Fel-Pro Nickel 5000 Never Seize. If concerns exist about some components being placed in the pool, lubricants such as NeoLube (graphite based) may be used. However the surfaces in all cases should be relubricated after being removed from the water if possible. Even some non threaded surfaces such as the vertical radial interfaces between the shield plug and the locking ring may be lubricated to facilitate assembly. Experience has shown that properly lubricated and properly assembled threads will not have a galling problem. Design of bolted connections where austenitic materials are used typically include a minimum differential hardness. This may be achieved by varying the cold work that the parts are subjected to during fabrication or by specifying different materials which inherently have differing hardness. Many of the components of the mechanical closures may be fabricated from harder materials such as the N grades of type 304 and 304L to provide harder surfaces to further reduce the potential of galling. The bolts are designated to be fabricated from type 316 and XM-19 to also provide harder surfaces to minimize the potential for galling.

Besides the various grades of stainless steel used in the design of the MCO and the fuel baskets aluminum is the only other major material used. The aluminum is used for the fuel rack insert on the Mark 1A fuel basket. Its only purpose is to provide for a positioning grid during the fuel loading. The major requirement is for material not to interfere with the processing of the fuel. The aluminum selected will not lose sufficient strength that it will block any of the gas flow passages in the baskets. A detailed evaluation of the specific alloy chosen in HNF-SD-SNF-ER-018 titled "Evaluation of Cast Carbon Steel and Aluminum for Rack Insert in MCO Mark 1A Fuel Basket". The alloy selected is ASTM B26 356.0-T6. Thermal expansion is taken into consideration in the tolerancing of the components. Review of the fuel rack indicates that it is composed of relatively thin ligaments of a weak material when compared to the stainless steel shroud welded to the base plate. Hence the rack would deform before any significant deformation of the shroud would occur. Also it should be noted that after the loading of the fuel that neither the shroud nor the fuel rack have any significant role in the safety of the storage of the fuel.

Other metals that are used in the design in small amounts are the soft metals used on the Inconel and stainless steel seals. There coatings are inert metals such as silver that will have no adverse reactions with the stainless steel during the life of the MCO.

PARSONS	CALCULATION PACKAGE	FILE NO:	KH-8009-8-01
		DOC NO:	HNF-SD-SNF-DR-003, Rev. 0, Appendix 3
		PAGE	1of 27

PROJECT NAME:	CLIENT:
MCO Final Design	Duke Engineering & Services Hanford, Inc.

CALCULATION TITLE:

Weight Summary

PROBLEM STATEMENT OR OBJECTIVE OF CALCULATION:

Calculate the nominal and maximum weight of the Multi-Canister Overpack.

Parsons 4/15/97

DOCUMENT REVISION	AFFECTED PAGES	REVISION DESCRIPTION	PREPARED BY INITIALS/DATE	CHECKED BY INITIALS/DATE	APPROVED BY INITIALS/DATE
0	1-27	Initial Issue	Diane Simpson 4/8/97	Marty Pitts 4/17/97	Charles Temus 4/16/97

TABLE OF CONTENTS

1. INTRODUCTION 4
2. REFERENCES 4
3. TECHNICAL APPROACH 4

List of Figures

TABLE 1 - MCO WEIGHT SUMMARY 5

TABLE 2 - MCO ASSEMBLED WITH CANISTER COVER 6

1. INTRODUCTION

This calculation package provides the calculated weights of fully assembled and loaded MCO's (with and without water), and the calculated weight of individual MCO componenets.

2. REFERENCES

1. DE&S, 1997, *Performance Specification for the Spent Nuclear Fuel Multi-Canister Overpack*, HNF-S-0426, Rev. 3, Duke Engineering and Services Hanford, Richland, Washington.

2. Oberg, E., Jones, F. D., Horton, H. L., and Ryffel, H.H., 1996, Machinery's Handbook, 25th Edition, Industrial Press, Inc., New York, New York.

3. Spent Nuclear Fuels, *Spent Nuclear Fuel Project Technical Databook*, WHC-SD-SNF-TI-015, Rev. 0, Westinghouse Hanford Company, Richland, Washington.

4. Department of Defense, United States of America, MIL-HDK-5G, 1 November 1994, Military Handbook, Metallic Materials and Elements for Aerospace Vehicle Structures Volume 1 of 2 Volumes.

5. Beer, F. P., Johnston, E. R. Jr., 1984, Vector Mechanics for Engineers Statics and Dynamics, Fourth Edition, McGraw-Hill Book Company, New York, New York.

6. MCO Drawing Package.

3. TECHNICAL APPROACH

The weight for the Multi-Canister Overpack (MCO) was determined by multiplying the volume of a component by the density of Stainless Steel (0.286 lb/in^3 , Reference 3). Table 1 represents a summary of the weight calculation for the MCO under different load conditions. Table 2 represents the weight of an fully loaded MCO, dry, with the canister cover. Attached as an Appendix are weight tables for each individual MCO Component.

Table 1 - MCO Weight Summary

Item	Condition	Nominal Weight (lbs.)	Maximum Weight (lbs)
MK1A Storage Basket	Empty	397.17	397.17
MK1A Scrap Basket	Empty	412.33	412.33
MK1A Storage Basket	Loaded 48 Fuel Assemblies	2303.25	2303.25
MKIV Storage Basket	Empty	199.44	199.44
MKIV Scrap Basket	Empty	164.73	164.73
MKIV Storage Basket	Loaded 54 Fuel Assemblies	3189.96	3189.96
MCO	Empty, without upper shield plug, dry	1921.76	2114.12
MCO	Empty, with upper shield plug, dry	3428.37	3691.92
MCO	Loaded - Six Loaded MK1A Storage Baskets, without upper shield plug, filled with water	17110.25	17302.61
MCO	Loaded - Six loaded MK1A Storage Baskets, with upper shield plug, filled with water	18551.86	18880.41
MCO	Loaded - Six loaded MK1A Storage Baskets, with upper shield plug, dry	17247.86	17511.41
MCO	Loaded - Five loaded MKIV Storage Baskets, without upper shield plug, filled with water	19216.56	19408.92
MCO	Loaded - Five loaded MKIV Storage Baskets, with upper shield plug, filled with water	20657.17	20986.72
MCO	Loaded - Five loaded MKIV Storage Baskets, with upper shield plug, dry	19378.17	19641.72

Table 2 - MCO Assembled with Canister Cover

Item	Condition	Nominal Weight (lbs.)	Maximum Weight (lbs)
Canister Cover	N/A	488.40	573.87
MCO	Loaded - Six loaded MK1A Storage Baskets, with upper shield plug, dry	17736.26	18025.28
MCO	Loaded - Five loaded MKIV Storage Baskets, with upper shield plug, dry	19866.57	20155.59

Appendix

MCO Components Weight Summaries

Mechanical Closure Detail - Canister Collar											
	O.D. nom. (in.)	O.D. max. (in.)	I.D. nom. (in.)	I.D. min. (in.)	Height nom. (in.)	Height max. (in.)	Volume nom. (in^3)	Volume max. (in^3)	Density, 304L (lb/in^3)	Weight nom. (lbs.)	Weight max. (lbs.)
Part 1	25.310	25.310	24.567	24.567	3.420	3.450	99.542	100.415	0.286	28.47	28.72
Part 2	25.310	25.310	24.567	24.567	0.375	0.390	10.915	11.351	0.286	3.12	3.25
Part 3	25.310	25.310	24.040	24.035	2.310	2.340	113.708	115.627	0.286	32.52	33.07
Part 4	25.310	25.310	24.045	24.030	3.315	3.360	162.553	166.663	0.286	46.49	47.67
Part 5	25.310	25.310	24.045	24.030	0.633	0.663	15.520	16.443	0.286	4.44	4.70
Part 6	24.045	24.060	22.985	22.970	9.065	9.095	354.927	366.180	0.286	101.51	104.73
Part 7	24.045	24.060	23.075	23.030	0.280	0.309	5.026	5.886	0.286	1.44	1.68
Part 8	23.075	23.090	22.985	22.970	0.280	0.309	0.912	1.341	0.286	0.26	0.38
	O.D. nom. (in.)	O.D. min. (in.)	I.D. nom. (in.)	I.D. max. (in.)	Height nom. (in.)	Height min. (in.)	Volume nom. (in^3)	Volume min. (in^3)			
Top bevel	25.310	25.280	24.567	24.567	0.100	0.088	1.455	1.228	0.286	-0.42	-0.35
Threads	24.5000	24.500	24.040	24.070	3.310	3.235	29.023	26.532	0.286	-8.30	-7.59
									Total Weight	209.53	216.26
	O.D. nom. (in.)	O.D. max. (in.)	I.D. nom. (in.)	I.D. min. (in.)	Height nom. (in.)	Height max. (in.)	Volume nom. (in^3)	Volume max. (in^3)			
Bottom Weld	24.045	24.06	23.075	23.03	0.280	0.309	5.026	5.886	0.286	1.44	1.68
										210.97	217.94
Revision			0								
Prepared by/Date			4/16/97								
Checked by/Date			4/17/97								

Locking and Lifting Ring												
	# of Bolt Holes	O.D. Nominal (in.)	O.D. max. (in.)	I.D. nom. (in.)	I.D. min (in.)	Height nom. (in.)	Height max. (in.)	Volume nom. (in^3)	Volume max (in^3)	Density, 304L (lb/in^3)	Weight nom. (lbs.)	Weight max. (lbs)
Lip		20.380	20.410			1.000	1.000	326.211	327.172	0.286	93.30	93.57
Mid Section		18.750	18.780			1.130	1.170	312.012	324.091	0.286	89.24	92.69
Mid Section Bevel		19.250	19.280	18.750	18.720	0.570	0.620	4.253	5.181	0.286	1.22	1.48
Bottom		24.000	24.030			3.870	3.900	1750.747	1768.732	0.286	500.71	505.86
Take-outs (all at minimums for max. weight)												
		O.D. Nominal (in.)	O.D. min. (in.)	I.D. nom. (in.)	I.D. max (in.)	Height nom. (in.)	Height min. (in.)	Volume nom. (in^3)	Volume min. (in^3)			
Top bevel		24.000	23.970	23.560	23.650	0.380	0.350	3.123	2.094	0.286	-0.89	-0.60
Center Hole		15.905	15.900			6.000	5.970	1192.088	1185.382	0.286	-340.84	-339.02
Center bevel- bottom		18.485	18.480	15.905	15.910	0.500	0.470	3.689	3.408	0.286	-1.05	-0.97
Bottom Bevel		24.440	24.350	24.000	24.030	0.500	0.470	4.185	2.857	0.286	-1.20	-0.82
Bolt Holes	18	1.500				3.870	3.820	6.839	6.750	0.286	-35.21	-34.75
Threads		24.440	24.350	24.000	24.030	3.370	3.310	28.206	20.124	0.286	-8.07	-5.76
										Total Weight	297.11	311.68
	# of Set Screws	O.D. Nominal (in.)	O.D. max. (in.)	I.D. nom. (in.)	I.D. min (in.)	Height nom. (in.)	Height max. (in.)	Volume nom. (in^3)	Volume max (in^3)	Density, 304L (lb/in^3)	Weight nom. (lbs.)	Weight max. (lbs)
Set Screw	18	1.500				3.750	3.780	6.627	6.680	0.286	34.11	34.39
										Weight w/screws	331.22	346.07
Revision		0										
Prepared by/Date		4/16/97										
Checked by/Date		4/17/97										

Canister Cover											
	O.D. nom. (in.)	O.D. max. (in.)	I.D. nom. (in.)	I.D. min. (in.)	Height nom. (in.)	Height max. (in.)	Volume nom. (in^3)	Volume max. (in^3)	Density, 304L (lbf/in^3)	Weight nom. (lbs.)	Weight max. (lbs.)
Lip	20.380	20.395			1.000	1.015	326.211	331.591	0.286	93.30	94.84
Center Top Section	18.750	18.765			1.130	1.175	312.012	324.956	0.286	89.24	92.94
Center Angle	19.250	19.265	18.750	18.735	0.570	0.590	4.253	4.666	0.286	1.22	1.33
Bottom	25.310	25.310			5.620	5.680	2827.551	2857.739	0.286	808.68	817.31
Take-outs											
	Radius nom. (in.)	Radius min. (in.)	Rrev nom. (in.)	Rrev min. (in.)	Area nom. (in^2)	Area min. (in^2)	Volume nom. (in^3)	Volume min. (in^3)			
"1/4 Toroid" where V=2π(Rrev)(Area)	2.760	2.7500	10.0800	10.0500	6.0699	5.9398	384.4323	375.0804	0.286	-109.95	-107.27
Hole	O.D. nom. (in.)	O.D. min. (in.)	I.D. nom. (in.)	I.D. max. (in.)	Height nom. (in.)	Height min. (in.)	Volume nom. (in^3)	Volume min. (in^3)			
Top Middle	2.500	2.4700			0.2500	0.2200	1.227	1.054	0.286	-0.35	-0.30
Mid Section	2.000	1.9700			1.2500	1.1900	3.927	3.927	0.286	-1.12	-1.04
"Thread" Area	1.034	1.0340			0.8600	0.8000	0.722	0.672	0.286	-0.21	-0.19
Bottom Tube	0.250	0.2200			1.1360	1.0610	0.056	0.040	0.286	-0.02	-0.01
	O.D. nom. (in.)	O.D. min. (in.)	I.D. nom. (in.)	I.D. max. (in.)	Height nom. (in.)	Height min. (in.)	Volume nom. (in^3)	Volume min. (in^3)			
Upper Center Section	17.792	17.777			2.780	2.750	691.189	682.558	0.286	-197.67	-195.21
Lower Center Section	24.250	24.235			1.474	1.428	680.786	659.186	0.286	-194.70	-188.53
Bottom "leg" angular section	25.310	25.280	24.550	24.550	0.130	0.120	1.935	1.714	0.286	-0.55	-0.49
Bottom "leg" section	25.310	25.280	24.550	24.550	0.130	0.110	3.869	3.143	0.286	-1.11	-0.90
									Total Weight (lbs)	486.74	512.48
							Total Weight welded to the MCO Shell			488.40	513.87
Revision			0								
Prepared by/Date			4/16/97								
Checked by/Date		4/17/97									

MCO Shell											
	O.D. nom. (in.)	O.D. max. (in.)	I.D. nom. (in.)	I.D. min. (in.)	Height nom. (in.)	Height max. (in.)	Volume nom. (in^3)	Volume max. (in^3)	Density, 304L (lb/in^3)	Weight nom. (lbs.)	Weight max. (lbs.)
MCO Shell (welded	24.045	24.120	23.045	23.000	139.760	139.830	5168.940	5795.802	0.286	1478.32	1657.60
									Total Weight	1478.32	1657.60
									Total Weight welded	1478.32	1657.60
Revision			0								
Prepared by/Date			4/16/97								
Checked by/Date			4/17/97								

MCO Shell Bottom											
	O.D. nom. (in.)	O.D. max. (in.)	I.D. nom. (in.)	I.D. min. (in.)	Height nom. (in.)	Height max. (in.)	Volume nom. (in^3)	Volume max. (in^3)	Density, 304L (lb/in^3)	Weight nom. (lbs.)	Weight max. (lbs.)
Shell Bottom	24.045	24.060			2.490	2.500	1130.678	1136.635	0.288	323.37	325.08
Center Take-Outs											
	Radius nom. (in.)	Radius min. (in.)	Rrev nom. (in.)	Rrev min. (in.)	Area nom. (in^2)	Area min. (in^2)	Volume nom. (in^3)	Volume min. (in^3)			
"1/4 Toroid" where V=2π(Rrev)(Area)	0.500	0.4900	11.7120	11.6690	0.1963	0.1886	14.4491	13.8260	0.288	-4.13	-3.95
	O.D. nom. (in.)	O.D. min. (in.)	I.D. nom. (in.)	I.D. max. (in.)	Height nom. (in.)	Height min. (in.)	Volume nom. (in^3)	Volume min. (in^3)			
Center Section	22.985	22.970			0.730	0.720	302.902	298.363	0.288	-86.63	-85.33
Center Hole	2.500	2.470			0.880	0.860	4.320	4.121	0.288	-1.24	-1.18
Center Angles (both sides of hole)	0.880	0.860			0.880	0.860	0.535	0.500	0.288	-0.15	-0.14
Side Take-Outs											
	O.D. nom. (in.)	O.D. min. (in.)	I.D. nom. (in.)	I.D. max. (in.)	Height nom. (in.)	Height min. (in.)	Volume nom. (in^3)	Volume min. (in^3)			
Side Bottom Angles	24.045	24.030	22.775	22.858	1.100	1.085	51.371	48.828	0.288	-14.69	-13.39
								Total Weight welded (lbs)		216.53	221.06
Revision			0								
Prepared by/Date			4/16/97								
Checked by/Date		4/17/97									

Shield Plug												
	Quantity	O.D. Nominal (in.)	O.D. max. (in.)	I.D. nom. (in.)	I.D. min (in.)	Height nom. (in.)	Height max. (in.)	Volume nom. (in^3)	Volume max (in^3)	Density, 304L (lb/in^3)	Weight nom. (lbs.)	Weight max. (lbs)
Top		15.780	15.785			6.250	6.265	1222.317	1226.027	0.288	349.58	350.64
Center		23.950	23.953			2.310	2.340	1040.670	1054.449	0.288	297.63	301.57
Bottom		22.900	22.915			1.940	1.955	799.029	806.262	0.288	226.52	230.59
		O.D. Nominal (in.)	O.D. min. (in.)	I.D. nom. (in.)	I.D. max (in.)	Height nom. (in.)	Height min. (in.)	Volume nom. (in^3)	Volume min. (in^3)			
Lifting Holes	4	0.656	0.653			1.500	1.500	0.510	0.502	0.288	-0.58	-0.57
Bottom Hole		4.280	4.280			0.500	0.470	7.194	6.762	0.288	-2.06	-1.93
Bottom Vertical Pipe off Bottom Hole		0.609	0.607			3.250	3.220	0.947	0.932	0.288	-0.27	-0.27
Bottom Vertical Pipe to Horizontal to Port #2		1.000	0.997			3.250	3.220	2.553	2.514	0.288	-0.73	-0.72
Horizontal Pipe to Port #3		1.000	0.985			12.500	12.470	9.817	9.502	0.288	-2.81	-2.72
Horizontal Pipe to Port #2		1.000	0.985			8.200	8.170	6.440	6.228	0.288	-1.84	-1.78
Port #4												
Top Section		5.500	5.485			1.125	1.110	26.728	26.228	0.288	-7.84	-7.50
Upper Middle Section		3.081	3.060			0.188	0.173	1.402	1.289	0.288	-0.40	-0.37
Middle Section		2.128	2.113			0.937	0.907	3.333	3.181	0.288	-0.95	-0.91
Middle Section Angle		2.750	2.735	2.128	2.143	0.311	0.296	0.371	0.358	0.288	-0.11	-0.10
Shoulder		2.128	2.113			0.056	0.056	0.199	0.196	0.288	-0.06	-0.06
Thread Area		1.825	1.8254			2.561	2.531	6.702	6.624	0.288	-1.92	-1.89
Pipe to Center Horizontal Pipe		1.000	0.997			1.314	1.284	1.032	1.002	0.288	-0.30	-0.29
Bolt Hole	4	0.656	0.641			0.875	0.860	0.296	0.278	0.288	-0.34	-0.32
	4	0.542	0.538			1.125	1.095	0.260	0.247	0.288	-0.30	-0.28
Port #3												
Top Section		5.500	5.485			1.125	1.110	26.728	26.228	0.288	-7.84	-7.50
Upper Middle Section		3.081	3.060			0.188	0.173	1.402	1.289	0.288	-0.40	-0.37
Middle Section		2.128	2.113			0.937	0.907	3.333	3.181	0.288	-0.95	-0.91
Middle Section Angle		2.750	2.735	2.128	2.143	0.311	0.296	0.371	0.358	0.288	-0.11	-0.10
Shoulder		2.128	2.113			0.056	0.056	0.199	0.196	0.288	-0.06	-0.06
Thread Area		1.825	1.8254			2.561	2.531	6.702	6.624	0.288	-1.92	-1.89
Pipe to Center Horizontal Pipe		0.609	0.609			1.314	1.284	0.383	0.374	0.288	-0.11	-0.11
Bolt Hole	4	0.656	0.641			0.875	0.860	0.296	0.278	0.288	-0.34	-0.32
	4	0.542	0.538			1.125	1.095	0.260	0.247	0.288	-0.30	-0.28
SECTION C-C												
Port #1		O.D. Nominal (in.)	O.D. min. (in.)	I.D. nom. (in.)	I.D. max (in.)	Height nom. (in.)	Height min. (in.)	Volume nom. (in^3)	Volume min. (in^3)			
Top		5.500	5.485			1.125	1.110	26.728	26.228	0.288	-7.84	-7.50
Mid Section		2.000	1.985			1.500	1.485	4.712	4.596	0.288	-1.35	-1.31
Bottom Section to Center Horizontal Pipe		0.953	0.938			3.375	3.330	2.407	2.301	0.288	-0.69	-0.66
Bolt Hole	4	0.656	0.641			0.875	0.860	0.296	0.278	0.288	-0.34	-0.32
	4	0.542	0.538			1.125	1.095	0.260	0.247	0.288	-0.30	-0.28
Revision		0										
Prepared by/Date		4/16/97										
Checked by/Date		4/17/97										
Port #2												
Top Section		5.500	5.485			1.125	1.110	26.728	26.228	0.288	-7.84	-7.50
Upper Middle Section		3.081	3.060			0.188	0.173	1.402	1.289	0.288	-0.40	-0.37

Middle Section		2.128	2.113			0.937	0.907	3.333	3.161	0.286	-0.95	-0.91
Middle Section Angle		2.750	2.735	2.128	2.143	0.311	0.296	0.371	0.336	0.286	-0.11	-0.10
Shoulder		2.128	2.113			0.058	0.056	0.199	0.196	0.286	-0.06	-0.06
Thread Area		1.825	1.8254			2.561	2.531	6.702	6.624	0.286	-1.92	-1.89
Pipe to Center Horizontal Pipe		1.000	0.997			1.314	1.284	1.032	1.002	0.286	-0.30	-0.29
Bolt Hole	4	0.656	0.641			0.875	0.860	0.296	0.278	0.286	-0.34	-0.32
	4	0.542	0.536			1.125	1.095	0.260	0.247	0.286	-0.30	-0.28
Pipes												
Horizontal off of Port #1		1.000	0.97			7.940	7.910	6.236	5.845	0.286	-1.78	-1.67
Vertical bottom to Horizontal to Port #1		1.000	0.985			3.250	3.220	2.553	2.454	0.286	-0.73	-0.70
Horizontal off of Port #4		1.000	0.97			7.980	7.950	6.267	5.875	0.286	-1.79	-1.68
Vertical to Horizontal to Port #4		1.000	0.985			3.250	3.220	2.553	2.454	0.286	-0.73	-0.70
										Total Weight	816.25	825.03
Plugs												
	Quantity	O.D. Nominal (in.)	O.D. max. (in.)	I.D. nom. (in.)	I.D. min (in.)	Height nom. (in.)	Height max. (in.)	Volume nom. (in^3)	Volume max (in^3)	Density, 304L (lbf/in^3)	Weight nom. (lbs.)	Weight max. (lbs)
6.9L	1	1.000	1.015			6.900	6.900	5.419	5.583	0.286	1.55	1.60
2.7L	2	1.000	1.015			2.700	2.700	2.121	2.185	0.286	1.21	1.25
2.0L	1	1.000	1.015			2.000	2.000	1.571	1.618	0.286	0.45	0.46
Angle Take-Outs												
		O.D. Nominal (in.)	O.D. min. (in.)	I.D. nom. (in.)	I.D. max (in.)	Height nom. (in.)	Height min. (in.)	Volume nom. (in^3)	Volume min. (in^3)			
6.9L	1	1.000	0.985	0.750	0.799	7	7	1.203	0.912	0.286	-0.34	-0.26
2.7L	2	1.000	0.985	0.750	0.799	2.800	2.700	0.481	0.352	0.286	-0.14	-0.10
2.0L	1	1.000	0.985	0.750	0.799	2.800	2.700	0.481	0.352	0.286	-0.14	-0.10
										Weight of the plugs	2.59	2.85
										Weight w/plugs	818.85	827.87
Revision		0										
Prepared by/Date		4/16/97										
Checked by/Date		4/17/97										

Internal Filter Guard Plate												
Guard Plate												
	# of Holes	O.D. Nominal (in.)	O.D. max. (in.)	I.D. nom. (in.)	I.D. min (in.)	Height nom. (in.)	Height max. (in.)	Volume nom. (in^3)	Volume max (in^3)	Density, 304L (lb/in^3)	Weight nom. (lbs.)	Weight max. (lbs)
Plate		22.500	22.530			1.500	1.530	596.412	609.963	0.286	170.57	174.45
Take-outs (all at minimums for max. weight)												
		O.D. Nominal (in.)	O.D. min. (in.)	I.D. nom. (in.)	I.D. max (in.)	Height nom. (in.)	Height min. (in.)	Volume nom. (in^3)	Volume min. (in^3)			
Center Hole		4.250	4.250			1.500	1.470	21.279	20.854	0.286	-6.09	-5.96
Side Angle		22.500	22.470	21.830	21.936	1.250	1.190	14.579	11.081	0.286	-4.17	-3.17
		O.D. Nominal (in.)	O.D. min. (in.)	I.D. nom. (in.)	I.D. max (in.)	Height nom. (in.)	Height min. (in.)	Volume nom. (in^3)	Volume min. (in^3)			
Holes	4	1.000	1.000			1.500	1.470	1.178	1.155	0.286	-1.35	-1.32
Chamfers	4	1.500	1.440	1.000	1.000	0.250	0.220	0.123	0.093	0.286	-0.14	-0.11
										Weight of the Plate	158.83	163.89
Guard Plate Ring												
		O.D. Nominal (in.)	O.D. max. (in.)	I.D. nom. (in.)	I.D. min (in.)	Height nom. (in.)	Height max. (in.)	Volume nom. (in^3)	Volume max (in^3)			
Ring		22.500	22.530			4.250	4.280	1689.833	1701.761	0.286	483.29	486.70
Take-outs (all at minimums for max. weight)												
		O.D. Nominal (in.)	O.D. min. (in.)	I.D. nom. (in.)	I.D. max (in.)	Height nom. (in.)	Height min. (in.)	Volume nom. (in^3)	Volume min. (in^3)			
Center Hole		20.500	20.470			4.250	4.220	1402.770	1388.795	0.286	-401.19	-397.20
Top and Bottom Side Angles		22.500	22.470	21.880	21.970	0.310	0.280	6.699	4.886	0.286	-1.92	-1.40
										Weight of the Ring	80.18	88.11
										Total Weight	238.01	252.00
Revision		0										
Prepared by/Date		4/16/97										
Checked by/Date		4/17/97										

Process Valves												
Process Valve												
	Quantity	O.D. Nominal (in.)	O.D. max. (in.)	I.D. nom. (in.)	I.D. min (in.)	Height nom. (in.)	Height max. (in.)	Volume nom. (in^3)	Volume max (in^3)	Density, 304L (lb/in^3)	Weight nom. (lbs.)	Weight max. (lbs)
Bottom Threaded Portion		1.823	1.825			2.529	2.549	6.801	6.868	0.266	1.89	1.91
Non-threaded Part Below Lip		1.771	1.778			0.14	0.145	0.345	0.359	0.266	0.10	0.10
Lip		2.378	2.383			0.311	0.316	1.381	1.409	0.266	0.40	0.40
		Base nom. (in.)	Base max. (in.)	Triangle Height nom. (in.)	Triangle Height max. (in.)	Height nom. (in.)	Height max. (in.)	Volume nom. (in^3)	Volume max (in^3)			
Hex Head (Volume=$A_{hexagon}$*h, where $A_{hexagon}$=Area of 12 equal triangles in the hexagon		0.326	0.328	0.565	0.568	0.500	0.505	0.553	0.565	0.266	0.16	0.16
Take-outs (all at minimums for max. weight)												
		O.D. Nominal (in.)	O.D. min. (in.)	I.D. nom. (in.)	I.D. max (in.)	Height nom. (in.)	Height min. (in.)	Volume nom. (in^3)	Volume min. (in^3)			
Center Hole		1.000	0.970			2.500	2.530	1.963	1.870	0.266	-0.56	-0.53
Bottom Angle		1.823	1.820	1.000	1.005	0.248	0.235	0.226	0.212	0.266	-0.06	-0.06
Side Holes (V= Area of an ellipse cut at a 45° angle*depth)	3	0.688	0.685			0.412	0.410	0.217	0.214	0.266	-0.19	-0.18
Lip angle		2.378	2.373	2.126	2.151	0.125	0.115	0.055	0.045	0.266	-0.02	-0.01
									Process Valve Total Weight		1.71	1.78
Rupture Disk/Process Valve	(also used Continental Disc Corporation dwg. # CD 30820)											
	Quantity	O.D. Nominal (in.)	O.D. max. (in.)	I.D. nom. (in.)	I.D. min (in.)	Height nom. (in.)	Height max. (in.)	Volume nom. (in^3)	Volume max (in^3)	Density, 304L (lb/in^3)	Weight nom. (lbs.)	Weight max. (lbs)
Bottom Threaded Portion		1.823	1.825			2.529	2.549	6.801	6.868	0.266	1.89	1.91
Non-threaded Part Below Lip		1.771	1.778			0.14	0.145	0.345	0.359	0.266	0.10	0.10
Lip		2.378	2.383			0.311	0.316	1.381	1.409	0.266	0.40	0.40
		Base nom. (in.)	Base max. (in.)	Triangle Height nom. (in.)	Triangle Height max. (in.)	Height nom. (in.)	Height max. (in.)	Volume nom. (in^3)	Volume max (in^3)			
Hex Head (Volume=$A_{hexagon}$*h, where $A_{hexagon}$=Area of 12 equal triangles in the hexagon		0.326	0.328	0.565	0.568	0.500	0.505	0.553	0.565	0.266	0.16	0.16
Take-outs (all at minimums for max. weight)												
		O.D. Nominal (in.)	O.D. min. (in.)	I.D. nom. (in.)	I.D. max (in.)	Height nom. (in.)	Height min. (in.)	Volume nom. (in^3)	Volume min. (in^3)			
Center Hole Top Portion (excess removed substituted for holes drilled in the top hexagon)		0.900	0.870			0.922	0.967	0.567	0.575	0.266	-0.17	-0.16
Center Hole		1.000	0.970			2.488	2.478	1.954	1.831	0.266	-0.58	-0.52
Bottom Angle		1.823	1.820	1.000	1.005	0.248	0.235	0.226	0.212	0.266	-0.06	-0.06
Side Holes (V= Area of an ellipse cut at a 45° angle*depth)	3	0.688	0.685			0.412	0.410	0.217	0.214	0.266	-0.19	-0.18
Lip angle		2.378	2.373	2.126	2.151	0.125	0.115	0.055	0.045	0.266	-0.02	-0.01
									Rupture Disk/Process Valve Total Weight		1.55	1.63
Revision		0										
Prepared by/Date		4/16/97										
Checked by/Date		4/17/97										

Process Port Cover Plates													
Plate													
	Quantity	O.D. Nominal (in.)	O.D. max. (in.)	I.D. nom. (in.)	I.D. min (in.)	Height nom. (in.)	Height max. (in.)	Volume nom. (in^3)	Volume max (in^3)	Density, 304L (lb/in^3)	Weight nom. (lbs.)	Weight max. (lbs)
Plate	4	5.480	5.475			1.000	1.003	23.414	23.613	0.286	26.79	27.01
Bolt Hole		O.D. Nominal (in.)	O.D. min. (in.)	I.D. nom. (in.)	I.D. max (in.)	Height nom. (in.)	Height min. (in.)	Volume nom. (in^3)	Volume min. (in^3)			Weight min. (lbs)
Top of Hole	17	1.125	1.110			0.750	0.720	0.748	0.697	0.286	-3.62	-3.39
Center Section	17	0.537	0.531			0.250	0.220	0.057	0.049	0.286	-0.28	-0.24
Seal Groove	4	3.555	3.550	3.297	3.302	0.100	0.097	0.139	0.129	0.286	-0.16	-0.15
										Weight of Plate	22.73	23.24
Cover Bolt												
		O.D. Nominal (in.)	O.D. max. (in.)	I.D. nom. (in.)	I.D. min (in.)	Height nom. (in.)	Height max. (in.)	Volume nom. (in^3)	Volume max (in^3)	Density, 304L (lb/in^3)	Weight nom. (lbs.)	Weight max. (lbs)
Hex Head/Cover Bolt	17	0.866	0.861			0.782	0.797	0.461	0.486	0.286	2.24	2.36
Center	17	0.490	0.505			2.000	2.015	0.377	0.404	0.286	1.83	1.96
										Flange Bolt Weight	4.07	4.32
										Total Weight	26.80	27.57
Revision		0										
Prepared by/Date		4/16/97										
Checked by/Date		4/17/97										

Internal Filter Assembly and Partial Manifold									
According to HNF-S-046, Rev. 3							**Weight nom. (lbs.)**	**Weight max. (lbs)**	
			Total Weight shall not exceed				**17**	**50**	
Revision		0							
Prepared by/Date		4/16/97							
Checked by/Date		4/17/97							

Basket Stabilizer Extension											
	O.D. nom. (in.)	O.D. max. (in.)	I.D. nom. (in.)	I.D. min. (in.)	Height nom. (in.)	Height max. (in.)	Volume nom. (in^3)	Volume max. (in^3)	Density, 304L (lb/in^3)	Weight nom. (lbs.)	Weight max. (lbs.)
Part 1	4.250	4.250	0.609	0.594	1.375	1.390	19.106	19.334	0.286	5.46	5.53
Part 2	4.250	4.250	2.750	2.715	0.180	0.210	1.484	1.763	0.286	0.42	0.50
Part 3	4.250	4.250	1.247	1.241	1.075	1.150	13.937	14.923	0.286	3.99	4.27
Part 4	4.250	4.250	1.287	1.281	0.370	0.430	4.768	5.546	0.286	1.36	1.59
Part 5	5.250	5.220	1.287	1.281	0.120	0.195	2.442	3.922	0.286	0.70	1.12
Part 6	5.250	5.220	2.175	2.710	1.750	1.830	31.381	28.608	0.286	8.98	8.18
Part 7	4.250	4.250	2.175	2.170	1.500	1.530	15.706	16.046	0.286	4.49	4.59
Take-outs											
	O.D. nom. (in.)	O.D. min. (in.)	I.D. nom. (in.)	I.D. max. (in.)	Height nom. (in.)	Height min. (in.)	Volume nom. (in^3)	Volume min. (in^3)			
Bottom Angles	3.115	3.110	2.715	2.720	0.490	0.415	0.449	0.371	0.286	-0.13	-0.11
Inside Center Angles	1.8610	1.819	1.287	1.293	0.200	0.200	0.142	0.129	0.286	-0.04	-0.04
									Total Weight	25.23	25.64
Revision			0								
Prepared by/Date			4/16/97								
Checked by/Date			4/17/97								

Mechanical Closure Dip Tube											
	O.D. nom. (in.)	O.D. max. (in.)	I.D. nom. (in.)	I.D. min. (in.)	Height nom. (in.)	Height max. (in.)	Volume nom. (in^3)	Volume max. (in^3)	Density, 304L (lb/in^3)	Weight nom. (lbs.)	Weight max. (lbs.)
Tube	1.315	1.315	0.599	0.599	146.945	146.960	158.161	158.177	0.286	45.23	45.24
									Total Weight	45.23	45.24
Revision			0								
Prepared by/Date			4/16/97								
Checked by/Date			4/17/97								

Dip Tube Guide Cone											
	O.D. nom. (in.)	O.D. max. (in.)	I.D. nom. (in.)	I.D. min. (in.)	Height nom. (in.)	Height max. (in.)	Volume nom. (in^3)	Volume max. (in^3)	Density, 304L (lb/in^3)	Weight nom. (lbs.)	Weight max. (lbs.)
Top and Middl	2.650	2.655	1.375	1.360	2.570	2.590	10.359	10.577	0.286	2.96	3.02
Bottom	2.750	2.765	1.375	1.360	0.600	0.595	2.673	2.708	0.286	0.76	0.77
Take-outs											
	O.D. nom. (in.)	O.D. min. (in.)	I.D. nom. (in.)	I.D. max. (in.)	Height nom. (in.)	Height min. (in.)	Volume nom. (in^3)	Volume min. (in^3)			
Top Inside Angle	1.725	1.710	1.375	1.390	4.891	0.488	2.084	0.190	0.286	-0.60	-0.05
Top Outside Angle	2.6500	2.655	2.130	2.145	0.714	0.709	0.697	0.682	0.286	-0.20	-0.19
									Total Weight	2.93	3.55
Revision			0								
Prepared by/Date			4/16/97								
Checked by/Date			4/17/97								

Basket Support Plate											
	Length nom. (in.)	Length max. (in.)	Width nom. (in.)	Width max. (in.)	Height nom. (in.)	Height max. (in.)	Volume nom. (in^3)	Volume max. (in^3)	Density, 304L (lb/in^3)	Weight nom. (lbs.)	Weight max. (lbs.)
Support Plate	10.180	10.195	1.490	1.505	0.500	0.530	7.584	8.132	0.286	2.17	2.33
"Take-outs"											
	Length nom. (in.)	Length min. (in.)	Width nom. (in.)	Width min. (in.)	Height nom. (in.)	Height min. (in.)	Volume nom. (in^3)	Volume min. (in^3)			
Angular section	0.190	0.160	0.190	0.160	0.500	0.470	0.009	0.008	0.286	0.00	0.00
Rectangular Section	0.125	0.110	0.590	0.580	0.500	0.470	0.018	0.015	0.286	-0.01	0.00
Radius (length=radius)	0.500	0.53(max.)	1.000	0.940	0.500	0.47 (min.), 0.53 (max.)	0.027	-0.013	0.286	-0.01	0.00
									Total Weight	2.15	2.32
									Welded Weight	2.17	2.33
Revision			0								
Prepared by/Date			4/16/97								
Checked by/Date			4/17/97								

Mark 1A Storage Basket					
	Quantity	Volume (in^3)	Density (lb/in^3)	Weight (lbs.)	
Bottom Plate	1	432.7366	0.286	123.76	
Center Post	1	352.4711	0.286	100.81	
Bottom Bushing	1	71.5469	0.286	20.46	
Top Guide	1	31.9856	0.286	9.15	
Support Rods	6	62.9898	0.286	108.09	
Rod Pins	6	1.0460	0.286	1.79	
Fuel Rack	1	202.0600	0.1000	20.21	
Shroud	1	45.0940	0.286	12.90	
Spacer	1	N/A	N/A	Negligible	
			Total Weight (lbs)	397.17	
Revision			0		
Prepared by/Date			4/16/97		
Checked by/Date			4/17/97		

Mark 1A Scrap Basket					
	Quantity	Volume (in^3)	Density (lb/in^3)	Weight (lbs.)	
Bottom Plate	1	432.7366	0.286	123.76	
Bottom Plate Welds	1	1.5180	0.286	0.43	
Bottom Plate Welds	1	1.3800	0.286	0.39	
Center Post	1	352.4711	0.286	100.81	
Bottom Bushing	1	71.5469	0.286	20.46	
Top Guide	1	31.9856	0.286	9.15	
Center Post Peg	5	0.2950	0.286	0.42	
Side Post	6	62.9820	0.286	108.08	
Side Post Pegs	6	0.3930	0.286	0.67	
Shroud	1	74.6400	0.286	21.35	
Seal	1	5.3160	0.286	1.52	
Dividers	6	14.7320	0.286	25.28	
			Total Weight (lbs)	**412.33**	
Revision			0		
Prepared by/Date			4/16/97		
Checked by/Date			4/17/97		

Mark IV Storage Basket					
	Quantity	Volume (in^3)	Density (lb/in^3)	Weight (lbs.)	
3 Inch Plate	1	340.2820	0.286	97.32	
Ring	1	31.1090	0.286	8.90	
Round Bar	1	190.3510	0.286	54.44	
Center Post	1	91.2240	0.286	26.09	
Sheet Metal	1	37.4880	0.286	10.72	
Flat Bar	1	6.8770	0.286	1.97	
			Total Weight (lbs)	199.44	
Revision			0		
Prepared by/Date			4/16/97		
Checked by/Date			4/17/97		

Mark IV Scrap Basket					
	Quantity	Volume (in^3)	Density (lb/in^3)	Weight (lbs.)	
Base Plate	1	94.8590	0.286	27.13	
Center Tube	1	91.3600	0.286	26.13	
Basket Divider	1	171.1380	0.286	48.95	
Lower Collar	1	10.1780	0.286	2.91	
Sheet Metal Item 10	1	199.0580	0.286	56.93	
Sheet Metal Item 11	1	6.4330	0.286	1.84	
Sheet Metal Item 12	1	2.9510	0.286	0.84	
			Total Weight (lbs)	164.73	
Revision			0		
Prepared by/Date			4/16/97		
Checked by/Date			4/17/97		

This page intentionally left blank.

PARSONS	CALCULATION PACKAGE	FILE NO:	KH-8009-8-02
		DOC NO:	HNF-SD-SNF-DR-003, Rev. 0, Appendix 4
		PAGE	1of 52

PROJECT NAME:	CLIENT:
MCO Final Design	Duke Engineering Services Hanford, Inc.

CALCULATION TITLE:

MCO CLOSURE BOLT PRELOAD MODELING AND RESPONSE

PROBLEM STATEMENT OR OBJECTIVE OF CALCULATION:

THE OBJECTIVE OF THIS CALCULATION PACKAGE IS TO EVALUATE THE PRELOAD REQUIRED FOR SEATING OF THE CONTAINMENT SEAL AT THE SHIELD PLUG.

QA Parsons 4/18/97

DOCUMENT REVISION	AFFECTED PAGES	REVISION DESCRIPTION	PREPARED BY INITIALS / DATE	CHECKED BY INITIALS / DATE	APPROVED BY INITIALS / DATE
0	1-52	Initial Issue	Charles Temus Pages 1-16, 19 4/17/97 Bob Winkel Pages 17-18, 20-52 4-17-97	Bob Winkel Pages 1-16, 19 4/17/97 Zachary Sargent Pages ~~17-18~~, 20-52 4/17/97	Charles Temus 4/17/97

SNF
KES 5/23/97

1. INTRODUCTION 4

2. REFERENCES 4

3. ASSUMPTIONS 4

4. MATERIAL PROPERTIES 5

5. METHOD OF ANALYSIS 5

5.1 Analysis Procedure 5

6. GEOMETRY 6

7. MATERIAL PROPERTIES 7

8. ACCEPTANCE CRITERIA 8

9. LOAD COMBINATIONS 8

10. ANALYSIS 9

11. SUMMARY 16

12. BOLT PRELOAD MODELING AND RESPONSE 17

12.1 Jacking Bolt / Seal Model Development 17

12.2 ANSYS Preload / Pressure Response 18

13. BOLT PRELOAD UNCERTAINTY 19

LIST OF TABLES

Page

TABLE 1: MATERIAL PROPERTIES FOR SA-182 AND SA-193 7
TABLE 2: BOLT STRESS AND SEAL LOAD RESULTS 18

APPENDICES

APPENDIX A: COMPUTER RUN OUTPUT SHEETS & INPUT FILE LISTINGS 20

1. INTRODUCTION

The MCO assembly is a single purpose Spent Nuclear Fuel (SNF) container that is capable of maintaining subcriticality at all times and maintain SNF containment and confinement after being closed and sealed. The MCO assembly consists of a shell, a shield plug and one to six SNF baskets. After the MCO is loaded with fuel, the shield plug is installed with the containment seal, the locking ring screwed down by means of double lead buttress threads, and the jacking bolts (hereinto refered as the 'bolts') are inserted in the locking ring. The bolts are then torqued to achieve the necessary preload to seat the seal.

The screws and the connecting components – the locking ring and the shield plug – are evaluated for the loads that are applied to the bolts. These loads consist of the preload, the torque uncertainty and the applied pressure loads.

2. REFERENCES

1. Bickford, John H., An Introduction to the Design and Behavior of Bolted Joints, 2nd Edition, Marcel Dekker, Inc., New York, NY 1990.
2. Helicoflex Specification H-305236, Revision NC.
3. Helicoflex High Performance Sealing Data Brochure.
4. Industrial Fasteners Institute, Fastener Standards, 6th Edition, Nova Machine Products Corp., Middleburg Heights, OH, 1988.
5. ASME Boiler and Pressure Vessel Code, Section II - Materials, Part D - Properties, 1995 Edition with 1995 Addenda.
6. ASME Boiler and Pressure Vessel Code, Section III, Division 1, Subsection NB - Class 1 Components, 1995 Edition with 1995 Addenda and 1995 Appendix F.

3. ASSUMPTIONS

1. A design pressure P of 150 psig is uniformly applied simultaneously with a design temperature of 375°C. This is conservative relative to the maximum pressure/temperature combinations of 150 psi/200°C and 75 psi/375°C.
2. All drop loads are carried through the shield plug to the shell.

3. Helicoflex preload seal requirement P_{SS} of 1850 lb./in [2] Value has been modified to 1700 lb/in in the latest transmittal from Helicoflex. The use of 1850 lb/in is conservative for all calculations.

4. Diameter of the seal is D_s = 23.420 - 0.186 = 23.234 inches [2]

5. Maximum design temperature is 375°C (707°F)

4. MATERIAL PROPERTIES

The shield plug and locking ring are fabricated from Type 304L stainless steel. The MCO shell and collar are fabricated from Type 304L stainless steel with the minimum yield and tensile strengths of Type 304 stainless steel (30 and 75 ksi, respectively)The bolts are fabricated from SA-193 Grade B8M.

5. METHOD OF ANALYSIS

The minimum preload for the bolts are determined by considering the pressure and the required compressive load to maintain the seal. Once the minimum preload is determined, the maximum preload is calculated based on the uncertainties of the torquing equipment, lubrication and friction of the bolts.

5.1 Analysis Procedure

a) Determine preload required to seat the seal.

b) Determine minimum compressive load required to maintain seal.

c) Calculate torque to seat the seal considering tool scatter, operator error and conversion error. Assume no relaxation or unloading due to the external load.

d) Check bolt load for preload plus external load.

e) Check maximum bolt load with preload with maximum scatter, plus external load, plus thermal load. Consider scatter from tool, operator, control, and external load.

f) Check that minimum seal compression is maintained for a preload with maximum negative scatter, external pressure and thermal load. Also consider scatter, operator, control, relaxation and external load.

g) If minimum seal is not maintained, increase torque and recalculate.

h) Check maximum stress in the bolt, under the bolt and in the thread wall. Verify thread adequacy.

6. GEOMETRY

The geometry for this calculation is per Drawing H-2-828042 (MCO Mechanical Closure) and Drawing H-2-828045 (MCO Mechanical Closure Shield Plug).

Assuming the use of 18 1-1/2-8 UN - 2A bolts, then:

The bolt diameter is

$$D_b = 1.50 \text{ in}^2$$

Geometry of the bolt is per Reference 4, Section A, Table 1.

The stress area is

$$A_s = 1.49 \text{ in}^2$$

and the thread root area is

$$A_r = 1.41 \text{ in}^2$$

The thread stripping area for 2A external thread, per inch of engagement is

$$As_s = 2.57 \text{ in}^2/\text{in.}$$

The thread stripping area for 2A internal thread, per inch of engagement is

$$As_n = 3.50 \text{ in}^2/\text{in.}$$

7. MATERIAL PROPERTIES

The shield plug and locking ring are fabricated from SA-182 F304L forgings. The bolts are fabricated from SA-193 Grade B8M (S31600) material. The material properties are taken from [5] and are summarized in Table 1. The loading temperature is 375°C (707°F).

Table 1: Material Properties for SA-182 and SA-193

	SA-182 F304L (psi)		SA-193 B8M (S31600) (psi)	
Component	70°F	707°F	70°F	707°F
E	28.3×10^6	24.8×10^6	28.3×10^6	24.8×10^6
S_M	--	13,500	--	--
S_Y	25,000	14,900	30,000	18,058
S_U	--	56,200	75,000	--
ν	0.3	0.3	0.3	0.3
S_M	--	--	10,000	5,993

And from Table TM-1 of [5], the thermal expansion --from 70°F to 707°F—of the bolt is

$\Delta T = 707\text{-}70 = 637°F$

$\alpha_{BOLT} = 9.76 \times 10^{-6}$ in./in./°F @ 707°F

$\alpha_{BOLT70} = 8.42 \times 10^{-6}$ in./in./°F @ 70°F

therefore

$\varepsilon_{BOLT} = (\alpha_{BOLT})(\Delta T) = 6.217 \times 10^{-3}$ in./in.

The thermal expansion for the shield plug is

$\Delta T = 707\text{-}70 = 637°F$

$\alpha_{PLUG} = 9.69 \times 10^{-6}$ in./in./°F @ 707°F

$\alpha_{PLUG70} = 8.46 \times 10^{-6}$ in./in./°F @ 70°F

therefore

$\varepsilon_{PLUG} = (\alpha_{PLUG})(\Delta T) = 6.173 \times 10^{-3}$ in./in.

8. ACCEPTANCE CRITERIA

The minimum preload must be maintained at or above the preload required to maintain the seal. From Reference 3, this minimum preload is 343 lb./in. for a 4.7 mm cross-sectional diameter with a silver coating.

Given $P_{SMIN} = 60$ N.mm = 342.6 lb./in. = 343 lb./in.

For all in-service combinations, including temperature cycling, the stress levels in the shield plug under the bolts, in the collar threads and in the locking ring threads should not exceed yield in order to avoid potential seal load losses. Plastic deformation of any of the components is permitted if the tight seal criteria of Appendix E of the ASME Code, Section III is met.

9. LOAD COMBINATIONS

Since the drop loads are taken directly through the shield plug to the shell, only those loads generated from the pressure and the preload required to maintain the seal will be transmitted through the bolts.

SNF kes 5/23/97

10. ANALYSIS

The load generated by the internal design pressure is

$$P_L = \frac{PD_S^2}{4}(\pi) = \frac{(150)(23.234)^2}{4}(\pi) = 6.36x10^4 \text{ lb}$$

The minimum load necessary to seat the seal is

$P_{MIN} = (D_S)(P_{SS})(\pi) = (23.234 \text{ in.})(1850 \text{ lb./in.})(\pi)$

P_{MIN} = 135,000 lb. and the minimum seal load to maintain the seal is

$SL = (D_S)(\pi)(P_{SMIN}) = (23.234 \text{ in.})(343 \text{ lb./in.})(\pi)$

$SL = 2.501 \times 10^4$ lb.

The minimum total bolt load at closure temperature becomes

$LP_{MIN} = P_L + SL = 6.36 \times 10^4 \text{ lb} + 2.501 \times 10^4 \text{ lb.}$

$LP_{MIN} = 8.86 \times 10^4$ lb.

Checking the compliance with Subsection NB, NB-3231 [6], which states that the design mechanical loads calculated based on the equations of Appendix E shall produce stresses less than the allowables from Section II, Part D , Table 4. The two equations address the forces required to seat the seal and the forces required to maintain the seal.

To seat the seal, the above equation shows P_{MIN} = 135,000 lb.

The force required to maintain the seal in a tight condition equals the pressure load (P_L) plus the minimum sealing load (LP_{MIN}). Since the seal seating load is larger, it controls.

Based on 18 bolts, the stress in the bolt is

$$\sigma_{BOLT} = \frac{P_{MIN}}{18(A_S)} = \frac{135{,}000lb}{18 \times (1.49in^2)}$$

$\sigma_{BOLT} = 5.035 \times 10^3$ psi

This is less than the bolt allowable at seating temperature (S_M @ 70°F = 1x 10^4 psi). It is also less than the allowable at maximum operating temperature (S_M @ 707°F = 5.993 x 10^3 psi). Therefore the value of σ_{BOLT} is acceptable, and the margin of safety is

$$MS_{BOLT} = \frac{5.993x10^3}{\sigma_{BOLT}} - 1$$

MS_{BOLT} = 0.19

Assuming the bolts are lubricated with a good grade lubricant, such as Never Seize, the variance due to the nut factor will be minimized (See [1], Table 5.1).

The variance in the applied preload can come from different sources. A suggested way of handling the variance in the preload due to the variance in torquing the bolts is set forth in [1].

Five variables are considered for determining the accuracy of the preload [1]. They are Tool Accuracy, Operator Accuracy, Control Accuracy, Short-term Relaxation and External Loads.

Tool Accuracy is the accuracy the tool reports when torquing. This involves repeatability as well as variance from the set value. Table 21.2 of [1] shows values of various torquing devices. Air impact wrenches have a value of -100% to +150% which is far beyond the tolerable range that the bolts can handle. Since this will be a remote operation with a gang of torque devices – which may be run hydraulically or pneumatically – some type of accurate control will be assumed to be built in. For calculational purposes, the value of ±3% is used (reported accuracy of the tool to be used by the buyer). Hence

V_{TOOL} = 0.03

Operator Accuracy relates to the accuracy determined by the set-up, calibration and application of the remote equipment to be used. It is assumed that built-in controls and checks will provide an accuracy of ±2%. Hence

V_{OP} = 0.02

Control Accuracy is defined as the accuracy of what is controlled (i.e. torque..) and its ability to produce what is desired (i.e. bolt tension). This includes all the variables from the lubricants, bolt alignments, tool types and procedures. NUREG 6007 recommends a control accuracy value of ±30% be applied. Assuming the bolts are torqued several times before the closure torque is applied, the bolts are carefully lubricated and a torquing

procedure is developed with the appropriate equipment which will minimize scatter, a value of ±15% is used. This value is based on what is expected by the buyer from testing similar bolts. Hence

$V_C = 0.15$

The forth variable being considered is that of short-term relaxation. For simplicity, only the relaxation due to embedment is considered and is assumed to be 10%. Since relaxation will only reduce the preload, there is no positive scatter. Hence

$V_{STR} = 0.10$ and $V_{+STR} = 0$

The last variable considered is the effect of external forces such as applied loads and the effect of the joint due to the relative stiffness of the bolt to the parts being clamped. Since the jacking bolts are short and stiff relative to the joint, this variable is small. The following values are based on the results of applying an external (pressure) load to a finite element of the joint discussed in Section 12, hence

$V_{EX} = 0$ and $V_{+EX} = 0.061$

All the above variables can be combined to give the overall scatter.

For initial seating of the seal, there is no relaxation and no effects from the external loads. Therefore

$$V_{TNI} = \sqrt{V_{TOOL}^2 + V_{OP}^2 + V_C^2}$$

$V_{TNI} = 0.154$

The overall scatter of the load in the bolt and in sealing load is :

Negative scatter:

$$V_{TN} = \sqrt{V_{TOOL}^2 + V_{OP}^2 + V_C^2 + V_{STR}^2 + V_{EX}^2}$$

$V_{TN} = -0.206$

Positive scatter:

$$V_{TP} = \sqrt{V_{TOOL}^2 + V_{OP}^2 + V_C^2 + V_{+STR}^2 + V_{+EX}^2}$$

$V_{TP} = 0.166$

The nominal preload is then

$$P_{NOM} = \frac{P_{MIN}}{(1 - V_{TNI})}$$

$P_{NOM} = 1.597 \times 10^5$ lb

And the maximum preload to seat the seal is

$P_{MAX\ SS} = P_{NOM} + (1 + V_{TP})$

$P_{MAX\ SS} = 1.862 \times 10^5$ lb.

With a nut factor F = 0.17, the nominal torque to seat the seal becomes

$$T_{NOM} = \frac{FD_B P_{NOM}}{18}$$

$T_{NOM} = 188.496$ ft-lb

Ensuring that the preload required to seat the seal is greater or less than the preload required to maintain the seal with the pressure load applied:

$$P_{REQ} = \frac{LP_{MIN}}{(1 + V_{TN})}$$

$P_{REQ} = 1.115 \times 10^5$ lb.

The preload to seat the seal ($P_{MAX\ SS}$) is greater than the preload required (P_{REQ}) to maintain the seal with the pressure load applied, therefore the nominal preload used for calculating the stresses in the bolt and joint will be defined as needed to seat the seal. Therefore

$P_{REQ} = P_{NOM} = 1.597 \times 10^5$ lb

The maximum preload in the bolt then becomes

$P_{MAX\ B} = P_{REQ}\ (1+V_{TP})$

$P_{MAX\ B} = 1.862 \times 10^5$ lb

Checking joint heat up to 707°F:

Since the coefficient of thermal expansion is greater for the bolt, it will increase the preload as the MCO heats up. Therefore the increase will have to be added to the maximum preload. The only portion of the shield plug and locking ring that does not expand the same as the collar is the bolt.

The change in the total load from the differential strain can be calculated for the bolt.

$\Delta T = 637°F$

$P_{TH} = (A_S)((\alpha_{BOLT})(\Delta T) - (\alpha_{PLUG})(\Delta T))(24.8 \times 10^6)(18)$

$P_{TH} = 2.966 \times 10^4$ lb

The maximum load, including thermal strain, becomes

$P_{MAX\ T} = P_{MAX} + P_{TH}$

$P_{MAX\ T} = 2.158 \times 10^5$ lb

Then, the minimum force to maintain the seal becomes:

Consider the effect of cooling the joint to 32°F:

$\Delta tc = (70 - 32) = 38°F$

$\sigma_{BTC} = (\alpha_{PLUG70} - \alpha_{BOLT70})(\Delta tc)(28.3 \times 10^6)$

$\sigma_{BTC} = 43.016$ psi

Adding this minimal stress to the maximum expected bolt stress has no effect on the bolt to meet allowables.

$LP_{THMIN} = LP_{MIN} + \sigma_{BTC}(A_S)(18)$

$LP_{THMIN} = 8.975 \times 10^4$ lb

This is still less than the force required to seat the seal, hence the seating force controls. The maximum bolt stress becomes

$$\sigma_{BMAX} = \frac{P_{MAXT}}{18(A_S)} = 8.047x10^3 \text{ psi}$$

The maximum load which would occur is compared to the allowable at the maximum operating pressure.

$\sigma_{BMAX\ ALLOWED} = 2S_M = 2(5993) = 11986$ psi

$\sigma_{BMAX} < \sigma_{BMAX\ ALLOWED}$

Compressive capacity of the bolt

The allowable for all stresses in service per NB-3232.1 is $2S_M$ at 707°F [6]

$C_{BOLT} = A_S(2(5993))$

$C_{BOLT} = 1.786 \times 10^4$ lb.

The compression capacity of the shield plug under the bolt is limited to the 304L yield strength:

$C_{PLUG} = A_R(14900)$

$C_{PLUG} = 2.101 \times 10^4$ lb.

Thread Engagement

The allowable stress in the threads is governed by NB-3227.2 [6] which allow the thread stress to be equal to or less than $0.6S_M$.

If the thread engagement length $L_{TH} = 3.5$ in then the thread capacity is:

For the internal thread:

$TH_{CI} = (As_n)(L_{TH})(0.6)(13500)$

$TH_{CI} = 9.922 \times 10^4$ lb.

For the external thread:

$TH_{CE} = (As_S)(L_{TH})(0.6)(5993)$

$TH_{CE} = 3.234 \times 10^4$ lb.

The $2S_M$ in-service stress limit of the bolt controls the serviceability of the joint. Hence the margin of safety is

$$MS_{JOINT} = \frac{2 \times 5993}{\sigma_{BMAX}} - 1 = 0.49$$

The margin of safety for design of the bolts ($MS_{BOLT} = 0.19$) is smaller and controls the design of the joint.

The stress in the thinnest wall of the shell due to preload (tension only) is:

T_{WALL} = 0.354 in = Thickness of the wall (Drawing H-2-828042)

DT_{WALL} = 24.567 in = Diameter at the thinnest part of shell

$$AT_{WALL} = (\pi)\left(DT_{WALL}\right)\left(\frac{T_{WALL}}{18}\right) = 1.518 \text{ in}^2$$

and the stress in the thread at the thinnest part of the wall is based on adding the total pressure load to the shell area in addition to what is allocated to the max bolt load is:

$$\sigma_{TWALL} = \frac{P_L + P_{MAX}}{18\left(AT_{WALL}\right)}$$

$\sigma_{TWALL} = 10.226 \times 10^3$ psi

This is less than both S_M = 13,500 psi and S_Y = 14,900 psi for the shell (S_M and S_Y are conservative since the shell and collar are fabricated out of type 304L stainless steel with minimum yield and tensile strengths of 30 ksi and 75 ksi, respectively) and therefore is acceptable. Bending and combination of stresses are addressed in the detailed model and analysis of the MCO collar and buttress thread analysis (File No. KH-8009-8-04).

11. SUMMARY

The joint and bolt are adequate to provide a minimum amount of preload required to both seat the seal and also maintain a tight seal during all loading events. The bolts meet both [6] and the Performance Specification criteria which specify that none of the joint components yield during the various conditions and that no leakage is to occur. This conclusion is based on the above calculation which takes a reasonable amount of uncertainty into consideration for the actual preloading based on torquing of the jacking bolts.

Post evaluation note: A subsequent detailed analysis of the thread region, reported in Section 10 of Appendix 6, predicts that bending stresses will exceed yield for the upper bound preload. However, associated preload losses are very small and the required seal load is maintained.

12. BOLT PRELOAD MODELING AND RESPONSE

In order to evaluate the changes in bolt and MCO closure seal loading, the two-dimensional, axisymmetric model of the MCO shell (Appendix 5, Section 12), shield plug, locking ring and bolt circle is modified to focus on the jacking bolt and seal response. The following summarizes the model details and the bolt seal response to maximum and minimum preload conditions.

12.1 Jacking Bolt / Seal Model Development

In order to meet the seal manufacturer's specifications [3], a minimum seal preload of 135,000 lb. must be applied to seat the seal. This is the minimum initial bolt preload value. Accounting for uncertainties in the preload application, the maximum preload is estimated to be 215,800 lb.

The bolt preload is applied using CONTAC12 gap elements between the bolt tip and the top of the shield plug. To achieve the desired preload, and appropriate gap element interference is iteratively selected. As a two-dimensional model , the bolts are modeled as an equivalent ring, having the same area as the 18 1-1/2 inch bolts. The stress area of the equivalent bolt is 1.49 in^2. Therefore, the area of the equivalent ring is:

$$A_{ring} = 18(1.49\ in^2) = 26.82\ in^2$$

Using a bolt circle diameter of 21.75 inches, the bolt ring thickness is:

$$T_{BR} = \frac{A_{ring}}{\pi(21.75)} = 0.393 \text{ inches}$$

A spring constant is selected for the ANSYS gap elements to model the seal response. The HelicoFlex seal response is nonlinear, but per page 24 of the brochure [3], the response is close to linear, once the seating load , Y_2, is achieved. The seal elastic spring constant is estimated as

$$k_s = \frac{Y_C - Y_2}{e_C - e_2} = \frac{5710 - 1827}{0.0433 - 0.0315} = 329{,}100 \text{ lb./in/in}$$

For the full cross-section

$K_S = \pi k_s D_{seal}$ where D_{seal} = Seal Diameter = 23.44 inches

$K_S = 2.42 \times 10^6$ lb/in

The seal spring element is input as initially closed and is placed adjacent to and parallel to the gap elements under the seal stop. The seal stop gap is iteratively selected to very narrowly close when the minimum preload of 135,000 lb. is achieved.

12.2 ANSYS Preload / Pressure Response

Both minimum and maximum preloads are evaluated with the ANSYS computer analysis. Two load steps are utilized for each run: 1) preload alone, and 2) preload plus design pressure of 150 psig. The ANSYS input and output files are MINBOLT.inp & MXBOLT.inp and MINBOLT.out & MXBOLT.out, respectively. The bolt stress and seal load results are summarized in Table 2.

Table 2: Bolt Stress and Seal load Results

	Bolt Stress (psi)			Seal Load (lb)		
ANSYS Run	Preload	Preload +Pressure	% Change	Preload	Preload + Pressure	% Change
Minbolt	4918	6724	+36.7	133,000	120,730	-9.2
Maxbolt	7005	7429	+6.1	135,200	134,300	-0.6

The change in the maximum bolt stress due to the addition of the pressure load is consistent with the values used in determining maximum bolt stress.

13. BOLT PRELOAD UNCERTAINTY

The analysis uses five different uncertainties associated with developing the preload of the bolts/set screws by torquing. These uncertainties are used in the analysis to demonstrate some of the different parameters that influence obtaining the correct preload on the bolts. The values used are not bounding values in any sense. It is left up to the user to develop procedures and tooling that will deliver the required preload in a repetitive manner. Some of the things, other than tooling and technique, that can be done to obtain repetitive and accurate preloading is to use a good quality lubricant and procedures that get uniform and repetitive application on the bolts. Pretorquing of the bolts is also important so that the threads of both the bolts and the locking ring are slightly work hardened and any manufacturing imperfections are smoothed over so that the relationship between preload and torque is more consistent. This can easily be done by using the bolt and locking ring of each individual assembly in the hydrostatic testing of the unit rather than a test assembly.

It is highly recommended that a test program be undertaken to develop the relationship between torque and preload for the specific lubricant, equipment, procedures, and environment for the MCO. A basic program will minimize the uncertainty and potential problems when the units are put into production. The test program will also help in qualifying the seals by ensuring the proper preload, since the seals are not to be tested during production.

APPENDIX A:

Computer Run Output Sheets

&

Input File Listings

SNF KES 5/23/97

COMPUTER RUN COVER SHEET

Project Number:	KH-8009-8
Computer Code:	ANSYS®-PC
Software Version:	5.0A
Computer System:	MS-DOS, Pentium® Processor
Computer Run File Number:	KH-8009-8-02
Unique Computer Run Filename:	MINBOLT.inp
Run Description:	Analysis of MCO Closure Response, Minimum Bolt Load.
Creation Date / Time:	26 February 1997 10:46:12 AM

Bob V. Winkel 4/17/97

Prepared By: Bob V. Winkel Date

4/17/97

Checked By: Zachary G. Sargent Date

LISTING OF MINBOLT.INP FILE

```
/BATCH,LIST
/FILENAM,minbolt
/PREP7
/TITLE,MCO DESIGN- 132 DEGREES C, 150 psi PRESSURE,

TREF,70
TUNIF,270
ETAN=0.05                ! Tangent modulus

/COM **** ELEMENT TYPES ****
ET,1,42,,,1              ! Shell
ET,2,42,,,1              ! Shield Plug
ET,3,42,,,1              ! Lifting & Locking Ring
ET,4,12                  ! Gap Elements Between Shield Plug & Shell
KEYOPT,4,7,1
ET,5,42,,,1              ! Bolt

/COM **** REAL CONSTANTS FOR GAP ELEMENTS ****
R,4,-90,1.0e9,-0.06,3.0      ! Shell/Shield Plug, Initially Open .06"
R,5,0,1.0e9,.0076            ! Gap Elements Under Bolt, Min. Preload Interference
R,6,0,1.0e9,-.009,2.0        ! Sealing Stop, initially open, gap adjusted for max. stiffness
R,7,0,1.0e9,0,1.0            ! Bottom MCO Plate, closed
r,8,0,2.42e7,,2.0                ! Seal Spring, max. stiffness (unloading stiffness)

/COM ************ MATERIAL PROPERTIES **************
MP,DENS,1,490/1728           ! 304L SS
MP,NUXY,1,0.3

MP,DENS,5,490/1728           ! SA193 Grade B8M
MP,NUXY,5,0.3

/COM **** DEFINING TEMPERATURES FOR MPDATA ****
MPTEMP,1, 70,100,200,300,400,500
MPTEMP,7,600,650,700,750

/COM **** DEFINING ELASTIC MODULI FOR 304L & SA-193 ****
MPDATA,EX,1,1,28.3e+06,28.1e+06,27.6e+06,27.0e+06,26.5e+06,25.8e+06
MPDATA,EX,1,7,25.3e+06,25.1e+06,24.8e+06,24.5e+06
/COM                     ! SA-193
MPDATA,EX,5,1,28.3e+06,28.1e+06,27.6e+06,27.0e+06,26.5e+06,25.8e+06
MPDATA,EX,5,7,25.3e+06,25.1e+06,24.8e+06,24.5e+06

/COM **** INSTANTANEOUS COEFFICIENTS OF THERMAL EXPANSION, 304L & SA-193 ****
MPDATA,ALPX,1,1,8.46e-06,8.63e-06,9.08e-06,9.46e-06,9.80e-06,10.10e-06
MPDATA,ALPX,1,7,10.38e-06,10.50e-06,10.60e-06,10.70e-06
/COM                     ! SA-193
MPDATA,ALPX,5,1,8.42e-06,8.59e-06,9.09e-06,9.56e-06,9.95e-06,10.25e-06
MPDATA,ALPX,5,7,10.51e-06,10.64e-06,10.76e-06,10.87e-06

/COM ************ SHELL GEOMETRY ****************
IR=11.5                  ! Internal Shell Radius @ Bottom
OR=12.000                    ! Shell Outside Radius @ Bottom
IR2 = 12.02                  ! Inside Radius at Collar Sealing Surface
```

```
OR2 = 12.625              ! Outside Radius at Collar Sealing Surface
IR3 = 12.25               ! Inside Radius at Collar-Lifting Ring Weld

/COM **** BOTTOM COVER PLATE  [DWG SK-2-300378] ****
N,1,,-1.32                ! Row 1
N,2,1.25,-1.32
N,3,2.13,-1.32
N,10,11.423,-1.32
FILL

N,41,0.00,-0.44           ! Row 3
N,42,1.25,-0.44
N,43,2.13,0.44
N,50,IR,0.44
FILL,43,50
N,52,OR,0.44
FILL,50,52

FILL,1,41,1,21,1,10       ! Middle Row
FILL,10,50,1,30
N,32,12,-0.32
FILL,30,32
FILL,10,32,1,11
N,53,IR,1.17
N,55,OR,1.17              ! Shell Stub/Weld
FILL,53,55

/COM **** SHELL [DWGS SK-2-300379 & SK-2-300461] ****
N,65,IR,6.68
N,67,OR,6.68
FILL
FILL,53,65,3,,3,3,1

/COM **** SINGLE ROW SHELL ****
N,100,IR,7.18             ! Inside
N,140,IR,71.68
N,180,IR,136.68

N,101,OR,7.18             ! Outside
N,141,OR,71.68
N,181,OR,136.68
FILL,100,140,20,,2,2,1,2.0
FILL,140,180,19,,2,2,1,.5

/COM **** DOUBLE ROW SHELL ****
N,190,IR,137.18           ! Transition to Double Row
N,192,OR,137.18
FILL

/COM **** BASE OF CASK THROAT--ELEVATION: 138 INCHES ****
N,217,IR,142.68           ! Transition to Double Row
N,219,OR,142.68
FILL
FILL,190,217,8,,3,3,1     ! Vertical Fill

/COM **** BOTTOM OF COLLAR TRANSITION ****
```

```
N,235,IR,146.06              ! Start of Transition to Large O.D &
N,237,OR,146.06              ! Assumed Location of Shield Plug Taper
FILL
N,238,IR,146.68
N,240,OR,146.68
FILL                 ! Horizontal Fill
FILL,217,235,5,,3,3,1        ! Vertical Fill

/COM **** TOP OF COLLAR TRANSITION ****
N,241,IR,147.31              ! End of Transition to Large O.D &
N,243,OR,147.31              ! Assumed Location of Shield Plug Taper
FILL                 ! Horizontal Fill
NGEN,2,3,241,243,1,,0.75

/COM **** COLLAR SEALING SURFACE ****
N,247,IR,149.63              ! Inside Radius of Sealing Surface
N,249,IR2,149.63             ! Outside Radius at Sealing Surface
FILL                 ! Horizontal Fill

/COM **** THICK WALL AT COLLAR TRANSITION ****
NGEN,2,10,240,249,3          ! Nodes 250-259 Coincident w/240-249 (by 3)
N,255,OR2,147.31             ! Outside Surface
N,261,OR2,149.63             ! Outside Surface
N,258,OR2,148.06
N,980,IR,149.38
N,981,11.755,149.38
N,982,IR2,149.38
N,983,12.317,149.38
N,984,OR2,149.38
N,990,OR2,146.68
FILL,240,990,1,251
NGEN,2,5,980,984,1,,-0.66
FILL,246,258,1,257
FILL,253,255,1,,1,3,3
FILL,237,990,1,991

/COM **** COLLAR AT BOTTOM EDGE OF PLUG (.155" above Sealing Surface) ****
NGEN,2,3,259,,,,0.245        ! Nodes 262

/COM **** COLLAR AT TOP EDGE OF PLUG (2" above bottom Edge) ****
NGEN,2,9,262,,,,2.00         ! Nodes 271
FILL,262,271,2

/COM **** COLLAR AT BASE OF THREADS ****
N,274,IR3,152.00
N,1000,IR2,152.00

/COM **** TOP TO COLLAR (WELD CLOSURE) ****
N,295,IR3,156.00
FILL,274,295
NGEN,3,1,259,295,3,(OR2-IR2)/2
NGEN,3,1,274,295,3,(OR2-IR3)/2

/COM ************ LOCKING & LIFTING RING GEOMETRY ************
RING1=7.94
RING2=9.375
```

```
RING3=9.625
RING4=10.19
RING5=12.23
LOCAL,11,0,,152.00          ! Local System z=0 at Base of Ring
CSYS,11

/COM **** TOP EDGE ****
N,401,RING1,6.13
CSYS,0
N,404,9.375,158.13
FILL,401,404,,,1
N,406,RING4,158.13
FILL,404,406,,,1            ! Top Edge

/COM **** LIFTING SURFACE ****
CSYS,11
N,421,RING1,5.13
N,424,RING2,5.13
FILL,421,424
N,426,RING4,5.13
FILL,424,426
FILL,401,421,1,,10,6,1
N,431,RING1,6.13-1.56
N,434,RING2,6.13-1.56
FILL

/COM **** BOLTING SURFACE ****
N,441,RING1,4
N,444,RING3,4
FILL
N,445,10.875-.197,4         ! Inside Edge of Bolt Hole
N,447,10.875+.197,4         ! Outside Edge of Bolt Hole
FILL
N,910,10.875-.197,4
N,911,10.9375+.197,4
N,448,RING5,4               ! O.D of Ring
CSYS,0                      ! Bolt Extension
N,924,10.875-.197,152.00          ! Double Nodes @ Bolt for Gap elements
N,925,10.875+.197,152.00
FILL,910,924,6,,2
FILL,911,925,6,,2
N,525,10.875-.197,151.874         ! Bottom of Bolt Extension
N,527,10.875+.197,151.874
FILL

/COM **** BOTTOM OF LIFTING/LOCKING RING ****
CSYS,11
NGEN,2,70,441,448,1,,-4     ! Bottom Surface of Lifting/Locking Ring
FILL,441,511,6,,10,8,1      ! Fill in Lifting/Locking Ring

/COM ************ SHIELD PLUG (offset y by 158.25) **************
LOCAL,20,0,,158.13
TYPE,2
PLUGR1=11.975
PLUGR2=11.45
PLUGR3=11.25
```

```
PLUGR4=7.89

/COM **** NODES AT PLUG AXIS (r=0) ****
N,601
N,602,0,-1
N,603,0,-1.994
N,606,0,-4.994
FILL,603,606,2,604
N,607,0,-6.25
N,610,0,-8.25
FILL,607,610,2,608
N,611,0,-8.75
N,613,0,-10.5
FILL,611,613

/COM **** NODAL GENERATION ****
NGEN,2,20,601,613,1,0.8825
NGEN,2,20,621,633,1,0.8825          ! Id Large Opening
NGEN,2,20,642,653,1,0.6875
NGEN,2,20,662,673,1,0.6875          ! Id Medium Opening
NGEN,2,20,683,693,1,0.4235          ! Id Small Opening
NGEN,2,10,706,713,1,0.9515          ! Center of Opening

N,730,5.4665,-1.994                 ! Od Small Opening
N,736,5.4665,-4.994
FILL,730,736,5,731
N,737,5.4665,-6.25
N,740,5.4665,-8.25
FILL,737,740,2,738
N,741,5.4665,-8.75
N,743,5.4665,-10.5
FILL,741,743
N,748,5.89,-1.0
NGEN,2,20,730,743,1,0.4235
FILL,748,750
N,766,7.265,0
NGEN,2,20,748,763,1,1.375
FILL,766,768
NGEN,3,20,766,768,1,0.3125
N,789,7.5775,-1.56
N,796,7.5775,-5.56
FILL,789,796,6
NGEN,2,20,789,796,1,0.3125
NGEN,3,20,777,783,1,0.3125

/COM **** UNDER LOCKING RING ****
N,824,8.5017,-6.25
N,827,8.5017,-8.25
FILL
N,828,8.5017,-8.75
N,830,8.5017,-10.5
FILL
NGEN,3,7,824,830,1,0.5616
NGEN,2,7,838,844,1,0.625
NGEN,2,7,845,851,1,0.625     ! Under Bolt
N,859,10.875+.197,-6.25
```

```
N,860,10.875+.197,-6.917
N,861,10.875+.197,-7.584
N,862,PLUGR2,-8.25
N,863,PLUGR2,-8.75
N,865,PLUGR3,-10.5
FILL,863,865,1
N,866,PLUGR1-0.288,-6.25
N,869,PLUGR1-0.288,-8.25
FILL,866,869,2
N,870,PLUGR1-0.288,-8.476
NGEN,2,5,866,870,1,0.288

/COM **** REFINING LIFTING EAR ****
CSYS,0
N,877,9.53,158.13
N,889,9.53,157.63
N,901,9.53,157.13
FILL,403,404,1,876
FILL,413,414,1,888
FILL,423,424,1,900
FILL,877,405,1,878
FILL,405,406,2,879,1
FILL,889,415,1,890
FILL,415,416,2,891,1
FILL,404,414,1,881
FILL,877,889,1,882
FILL,878,890,1,883
FILL,405,415,1,884
FILL,879,891,1,885
FILL,880,892,1,886
FILL,406,416,1,887
FILL,889,901,1,894
FILL,414,424,1,893
FILL,901,425,1,902
FILL,890,902,1,895
FILL,415,425,1,896
FILL,425,426,2,903,1
FILL,891,903,1,897
FILL,892,904,1,898
FILL,416,426,1,899
FILL,424,434,1,907
FILL,433,434,1,908
FILL,423,433,1,905
FILL,905,907


/COM **** FILTER GUARD PLATE ****
PLATE1=0.273
PLATE2=0.6575
PLATE3=1.357
PLATE4=10.25
PLATE5=11.25

N,1200,PLATE4,146.78
N,1202,PLATE5,146.78
FILL
```

```
NGEN,5,3,1200,1202,,,-0.85
NGEN,2,3,1212,1214,,,-0.25
N,1221,PLATE4,141.88
N,1222,10.75,141.88
N,1223,10.915,141.88
FILL,1215,1221,1,1218
FILL,1223,1217,1,1220
FILL,1216,1222,1,1219
N,1237,6.4375,143.38
FILL,1212,1237,3,1225,4
N,1249,3.578,143.38
FILL,1237,1249,2,1241,4
NGEN,2,1,1225,1249,4,,-0.25
NGEN,2,2,1226,1250,4,,-1.25
FILL,1226,1228,1,1227,,7,4
N,1253,2.625,145.255
N,1254,2.625,145.005
N,1256,2.625,143.38
FILL,1254,1256
N,1257,2.625,143.13
N,1259,2.625,141.88
FILL,1257,1259
NGEN,2,10,1253,1259,1,-0.5
NGEN,2,10,1263,1269,1,-0.768
N,1283,0.6575,145.255
N,1284,0.6575,145.005
N,1260,2.125,147.63
N,1270,1.357,147.63
N,1280,0.6575,147.63
N,1290,0.273,147.63
NGEN,3,1,1260,1290,10,,-0.5625

/COM **** NODES AT BOTTOM GAP ELEMENTS ****
NGEN,2,2000,1,10,1,,-1.00


/COM **** COUPLING NODES ****
/COM **** BETWEEN LIFTING/LOCKING RING & SHELL ****
CP,1,UY,508,277          ! Start Threads
CP,2,UY,498,280
CP,3,UY,488,283
CP,4,UY,478,286
CP,5,UY,468,289
CP,6,UY,458,292

/COM **** BETWEEN BOLT & LOCKING RING ****
CP,7,UY,445,910
CP,8,UX,445,910
CP,9,UY,447,911
CP,10,UX,447,911
*DO,I,1,7
CP,10+I,UY,445+10*I,910+2*I
*ENDDO
*DO,I,1,7
CP,17+I,UY,447+10*I,911+2*I
*ENDDO
```

```
*DO,I,1,7
CP,24+I,UX,445+10*I,910+2*I
*ENDDO
*DO,I,1,7
CP,31+I,UX,447+10*I,911+2*I
*ENDDO
NALL
EALL

/COM **** ELEMENT GENERATION FOR SHELL ****
TYPE,1
MAT,1

/COM **** BOTTOM OF SHELL ****
E,1,2,22,21
E,2,3,23,22
EGEN,8,1,-1
E,10,11,30
E,21,22,42,41
E,22,23,43,42
EGEN,10,1,-1
E,11,31,30
E,11,32,31

/COM **** SHELL ****
E,50,51,54,53
EGEN,2,1,-1
EGEN,5,3,-2

/COM **** FIRST TRANSITION ELEMENTS ****
E,65,66,100
E,100,66,101
E,67,101,66

/COM **** SINGLE SHELL ****
E,100,101,103,102
EGEN,40,2,-1

/COM **** SECOND TRANSITION ELEMENTS ****
E,190,180,191
E,180,181,191
E,181,192,191

/COM **** TOP SHELL (DOUBLE ELEMENT) ****
E,190,191,194,193
EGEN,2,1,-1
EGEN,18,3,-2
E,244,245,986,985
EGEN,2,1,-1
E,256,257,988,987
E,257,258,989,988
E,985,986,981,980
EGEN,4,1,-1
E,980,981,248,247
EGEN,2,1,-1
E,982,983,260,249
```

```
E,983,984,261,260

/COM **** COLLAR TRANSITION & THREADED REGIONS ****
E,237,991,251,240
E,991,990,251
E,240,251,254,253
E,251,990,255,254
E,253,254,257,256
EGEN,2,1,-1
E,259,260,263,262
EGEN,2,1,-1
EGEN,12,3,-2
E,271,274,1000

/COM **** MERGE COINCIDENT NODES FOR SHELL ****
ESEL,S,TYPE,,1
NSLE
NUMMRG,NODE,
EALL
NALL
/COM **** END OF SHELL/COLLAR ELEMENT GENERATION ****

/COM **** LOCKING/LIFTING RING ELEMENTS ****
TYPE,3
MAT,1
E,411,412,402,401
EGEN,2,1,-1
EGEN,2,10,-2
E,413,888,876,403
E,881,404,876
E,888,881,876
E,888,414,881
E,881,882,877,404
E,414,889,882,881
E,882,883,878,877
E,889,890,883,882
E,883,884,405,878
E,890,415,884,883
E,884,885,879,405
E,415,891,885,884
E,885,886,880,879
E,891,892,886,885
E,886,887,406,880
E,892,416,887,886
E,423,900,888,413
E,893,414,888
E,900,893,888
E,900,424,893
E,893,894,889,414
E,424,901,894,893
E,894,895,890,889
E,901,902,895,894
E,895,896,415,890
E,902,425,896,895
E,896,897,891,415
E,425,903,897,896
```

```
E,897,898,892,891
E,903,904,898,897
E,898,899,416,892
E,904,426,899,898
E,431,432,422,421
E,905,423,422
E,432,905,422
E,432,433,905
E,905,906,900,423
E,433,908,906,905
E,906,907,424,900
E,908,434,907,906
E,441,442,432,431
EGEN,2,1,-1
E,443,908,433
E,443,444,434,908
E,451,452,442,441
EGEN,3,1,-1
EGEN,7,10,-3
E,454,912,910,444
E,464,914,912,454
E,474,916,914,464
E,484,918,916,474
E,494,920,918,484
E,504,922,920,494
E,514,924,922,504
E,458,448,911,913
E,468,458,913,915
E,478,468,915,917
E,488,478,917,919
E,498,488,919,921
E,508,498,921,923
E,518,508,923,925

/COM **** BOLT ****
TYPE,5
MAT,5
E,455,456,446,445
EGEN,8,10,-1
E,456,457,447,446
EGEN,8,10,-1
/COM ************ END OF LOCKING/LIFTING RING **************

/COM **** SHIELD PLUG ELEMENTS ****
TYPE,2
MAT,1
E,602,622,621,601
EGEN,11,1,-1
EGEN,2,20,-11
E,613,1290,612
E,1290,1280,632,612
E,1280,633,632
E,633,1270,632
E,1270,652,632
E,1270,653,652
E,643,663,662,642
```

```
EGEN,10,1,-1
EGEN,2,20,-10
E,673,693,692,672
EGEN,2,20,-10
E,653,1260,652
E,1260,672,652
E,1260,673,672
E,707,717,716,706
EGEN,7,1,-1
E,717,737,736,716
EGEN,7,1,-1
E,731,751,750,730
EGEN,13,1,-1
E,749,769,768,748
EGEN,15,1,-1
E,767,787,786,766
EGEN,17,1,-1
EGEN,2,20,-17
E,818,825,824,817
EGEN,6,1,-1
EGEN,5,7,-6
E,853,860,859,852
EGEN,6,1,-1
E,860,867,866,859
EGEN,3,1,-1
E,867,872,871,866
EGEN,4,1,-1
/COM ************ END OF SHIELD PLUG ************

/COM ************ FILTER GUARD PLATE ************
E,1200,1201,858,851
E,1201,1202,865,858
E,1203,1204,1201,1200
EGEN,2,1,-1
EGEN,6,3,-2
E,1221,1222,1219,1218
E,1222,1223,1220,1219
E,1226,1215,1212,1225
E,1227,1218,1215,1226
E,1228,1221,1218,1227
E,1230,1226,1225,1229
EGEN,3,1,-1
EGEN,6,4,-3
E,1257,1250,1249,1256
EGEN,3,1,-1
E,1264,1254,1253,1263
EGEN,6,1,-1
E,1271,1261,1260,1270
EGEN,9,1,-1
E,1281,1271,1270,1280
EGEN,4,1,-1
E,1291,1281,1280,1290
EGEN,2,1,-1

/COM ************ CONTACT ELEMENTS ************
/COM **** BETWEEN LOCKING RING & SHIELD PLUG ****
```

```
TYPE,4
REAL,4
E,806,401
E,807,411
E,808,421
E,809,431
E,810,441
E,811,451
E,812,461
E,813,471
E,814,481
E,815,491
E,816,501
E,817,511

/COM **** BETWEEN SHIELD PLUG & BOTTOM OF BOLT
REAL,5
n,3000,10.875-.197,151.88
E,3000,525
E,852,526
E,859,527

/COM **** BETWEEN SHIELD PLUG & SHELL (ABOVE SEAL)
REAL,4
E,271,871
E,268,872
E,265,873
E,262,874

/COM **** BETWEEN SHIELD PLUG & SHELL (BELOW SEAL)
E,863,980

/COM **** BETWEEN SHIELD PLUG AND SEAL LIP
TYPE,4
REAL,6
E,248,870
E,249,875

/COM **** BOTTOM GAP ELEMENTS
TYPE,4
REAL,7
E,2001,1
EGEN,10,1,-1
NALL
EALL
/COM ************* END GAP ELEMENTS *************

/COM ************* BOUNDARY CONDITIONS *************
CSYS,0
NSEL,S,LOC,X,0
NSEL,R,LOC,Y,-1.33,158.14
D,ALL,UX,0
NALL
EALL
NSEL,S,NODE,,2001,2010
D,ALL,ALL,0
```

```
EALL
NALL

/com fine tune seal & bolt regions
nmodif,869,11.72,149.88
nmodif,870,11.72,149.65
type,2
emodif,420,1,3000,846,853,852
e,845,846,3000,3000
type,4
real,8
e,248,869      ! seal spring

FINI

!*****************************************************************
/COM ***************        SOLUTION PHASE        **************
/SOLUTION
time,1        ! bolt preload only
lswrite,1

time,2                    ! Preload + Pressure
/COM **** 150 PSI INTERNAL PRESSURE ****
NSEL,S,LOC,X,0,1.26          ! Bottom Plate
NSEL,R,LOC,Y,-0.45,-0.43
SF,ALL,PRES,150
NALL
EALL
NSEL,S,LOC,X,1.24,2.14
NSEL,R,LOC,Y,-0.45,0.45
SF,ALL,PRES,150
NALL
EALL
NSEL,S,LOC,X,2.12,11.51
NSEL,R,LOC,Y,0.43,0.45
SF,ALL,PRES,150
NALL
EALL
NSEL,S,LOC,X,11.49,11.51      ! Inside Shell
NSEL,R,LOC,Y,0.43,149.64
SF,ALL,PRES,150
NALL
EALL
NSEL,S,LOC,X,11.49,11.76      ! Edge Shell to Seal
NSEL,R,LOC,Y,149.62,149.64
SF,ALL,PRES,150
NALL
EALL
NSEL,S,LOC,X,11.67,11.69      ! Seal
NSEL,R,LOC,Y,149.64,149.89
SF,ALL,PRES,150
NALL
EALL
NSEL,S,LOC,X,11.44,11.69      ! Shield Plug (above seal)
NSEL,R,LOC,Y,149.87,149.89
SF,ALL,PRES,150
```

```
NALL
EALL
NSEL,S,LOC,X,11.44,11.46      ! Side of Shield Plug
NSEL,R,LOC,Y,149.37,149.89
SF,ALL,PRES,150
NALL
EALL
NSEL,S,LOC,X,11.24,11.46      ! Shield Plug Taper
NSEL,R,LOC,Y,147.62,149.39
SF,ALL,PRES,150
NALL
EALL
NSEL,S,LOC,X,11.24,11.26      ! Guard Plate Ring
NSEL,R,LOC,Y,143.12,147.64
SF,ALL,PRES,150
NALL
EALL
NSEL,S,LOC,X,10.914,11.26     ! Guard Plate Taper
NSEL,R,LOC,Y,141.87,143.14
SF,ALL,PRES,150
NALL
EALL
NSEL,S,LOC,X,1.34,10.92       ! Guard Plate Bottom
NSEL,R,LOC,Y,141.87,141.89
SF,ALL,PRES,150
NALL
EALL
nsubst,5
lswrite,2
lssolve,1,2
FINI

/Post1                        ! Obtain Bolt/Seal Response
set,1
lpath,525,527          ! Bolt Cross Section
prsect
lpath,870,875          ! Seal Stop Cross Section
prsect
etable,Force,smisc,1   ! Seal Normal Force
esel,s,real,,8
pretab
eall
set,2
lpath,525,527          ! Bolt Cross Section
prsect
lpath,870,875          ! Seal Stop Cross Section
prsect
etable,Force,smisc,1   ! Seal Normal Force
esel,s,real,,8
pretab
fini
/exit
```

COMPUTER RUN COVER SHEET

Project Number:	KH-8009-8
Computer Code:	ANSYS®-PC
Software Version:	5.0A
Computer System:	MS-DOS, Pentium® Processor
Computer Run File Number:	KH-8009-8-02
Unique Computer Run Filename:	MINBOLT.out
Run Description:	Analysis of MCO Closure Response, Minimum Bolt Load.
Run Date / Time:	26 February 1997 3:39:46 PM

Bob V. Winkel 4/17/97

Prepared By: Bob V. Winkel Date

4/17/97

Checked By: Zachary G. Sargent Date

SNF KGS 5/23/97

COMPUTER RUN COVER SHEET

Project Number:	KH-8009-8
Computer Code:	ANSYS®-PC
Software Version:	5.0A
Computer System:	MS-DOS, Pentium® Processor
Computer Run File Number:	KH-8009-8-02
Unique Computer Run Filename:	MXBOLT.inp
Run Description:	Analysis of MCO Closure Response, Maximum Bolt Load.
Creation Date / Time:	26 February 1997 3:09:58 PM

Bob V. Winkel 4/17/97

Prepared By: Bob V. Winkel Date

4/17/97

Checked By: Zachary G. Sargent Date

LISTING OF MINBOLT.INP FILE

```
/BATCH,LIST
/FILENAM,minbolt
/PREP7
/TITLE,MCO DESIGN- 132 DEGREES C, 150 psi PRESSURE,

TREF,70
TUNIF,270
ETAN=0.05                ! Tangent modulus

/COM **** ELEMENT TYPES ****
ET,1,42,,,1              ! Shell
ET,2,42,,,1              ! Shield Plug
ET,3,42,,,1              ! Lifting & Locking Ring
ET,4,12                  ! Gap Elements Between Shield Plug & Shell
KEYOPT,4,7,1
ET,5,42,,,1              ! Bolt

/COM **** REAL CONSTANTS FOR GAP ELEMENTS ****
R,4,-90,1.0e9,-0.06,3.0      ! Shell/Shield Plug, Initially Open .06"
R,5,0,1.0e9,.0021            ! Gap Elements Under Bolt, Min. Preload Interference
R,6,0,1.0e9,-.006,2.0        ! Sealing Stop, initially open, gap adjusted for max. stiffness
R,7,0,1.0e9,0,1.0            ! Bottom MCO Plate, closed
r,8,0,2.42e7,.006                ! Seal Spring, max. stiffness (unloading stiffness)

/COM ************ MATERIAL PROPERTIES **************
MP,DENS,1,490/1728           ! 304L SS
MP,NUXY,1,0.3

MP,DENS,5,490/1728           ! SA193 Grade B8M
MP,NUXY,5,0.3

/COM **** DEFINING TEMPERATURES FOR MPDATA ****
MPTEMP,1, 70,100,200,300,400,500
MPTEMP,7,600,650,700,750

/COM **** DEFINING ELASTIC MODULI FOR 304L & SA-193 ****
MPDATA,EX,1,1,28.3e+06,28.1e+06,27.6e+06,27.0e+06,26.5e+06,25.8e+06
MPDATA,EX,1,7,25.3e+06,25.1e+06,24.8e+06,24.5e+06
/COM                     ! SA-193
MPDATA,EX,5,1,28.3e+06,28.1e+06,27.6e+06,27.0e+06,26.5e+06,25.8e+06
MPDATA,EX,5,7,25.3e+06,25.1e+06,24.8e+06,24.5e+06

/COM **** INSTANTANEOUS COEFFICIENTS OF THERMAL EXPANSION, 304L & SA-193 ****
MPDATA,ALPX,1,1,8.46e-06,8.63e-06,9.08e-06,9.46e-06,9.80e-06,10.10e-06
MPDATA,ALPX,1,7,10.38e-06,10.50e-06,10.60e-06,10.70e-06
/COM                     ! SA-193
MPDATA,ALPX,5,1,8.42e-06,8.59e-06,9.09e-06,9.56e-06,9.95e-06,10.25e-06
MPDATA,ALPX,5,7,10.51e-06,10.64e-06,10.76e-06,10.87e-06

/COM ************ SHELL GEOMETRY ****************
IR=11.5                  ! Internal Shell Radius @ Bottom
OR=12.000                    ! Shell Outside Radius @ Bottom
```

SNF KH 5/23/97

```
IR2 = 12.02              ! Inside Radius at Collar Sealing Surface
OR2 = 12.625             ! Outside Radius at Collar Sealing Surface
IR3 = 12.25              ! Inside Radius at Collar-Lifting Ring Weld

/COM **** BOTTOM COVER PLATE  [DWG SK-2-300378] ****
N,1,,-1.32               ! Row 1
N,2,1.25,-1.32
N,3,2.13,-1.32
N,10,11.423,-1.32
FILL

N,41,0.00,-0.44          ! Row 3
N,42,1.25,-0.44
N,43,2.13,0.44
N,50,IR,0.44
FILL,43,50
N,52,OR,0.44
FILL,50,52

FILL,1,41,1,21,1,10      ! Middle Row
FILL,10,50,1,30
N,32,12,-0.32
FILL,30,32
FILL,10,32,1,11
N,53,IR,1.17
N,55,OR,1.17             ! Shell Stub/Weld
FILL,53,55

/COM **** SHELL [DWGS SK-2-300379 & SK-2-300461] ****
N,65,IR,6.68
N,67,OR,6.68
FILL
FILL,53,65,3,,3,3,1

/COM **** SINGLE ROW SHELL ****
N,100,IR,7.18            ! Inside
N,140,IR,71.68
N,180,IR,136.68

N,101,OR,7.18            ! Outside
N,141,OR,71.68
N,181,OR,136.68
FILL,100,140,20,,2,2,1,2.0
FILL,140,180,19,,2,2,1,.5

/COM **** DOUBLE ROW SHELL ****
N,190,IR,137.18          ! Transition to Double Row
N,192,OR,137.18
FILL

/COM **** BASE OF CASK THROAT--ELEVATION: 138 INCHES ****
N,217,IR,142.68          ! Transition to Double Row
N,219,OR,142.68
FILL
FILL,190,217,8,,3,3,1    ! Vertical Fill
```

```
/COM **** BOTTOM OF COLLAR TRANSITION ****
N,235,IR,146.06              ! Start of Transition to Large O.D &
N,237,OR,146.06              ! Assumed Location of Shield Plug Taper
FILL
N,238,IR,146.68
N,240,OR,146.68
FILL                  ! Horizontal Fill
FILL,217,235,5,,3,3,1         ! Vertical Fill

/COM **** TOP OF COLLAR TRANSITION ****
N,241,IR,147.31              ! End of Transition to Large O.D &
N,243,OR,147.31              ! Assumed Location of Shield Plug Taper
FILL                  ! Horizontal Fill
NGEN,2,3,241,243,1,,0.75

/COM **** COLLAR SEALING SURFACE ****
N,247,IR,149.63              ! Inside Radius of Sealing Surface
N,249,IR2,149.63             ! Outside Radius at Sealing Surface
FILL                  ! Horizontal Fill

/COM **** THICK WALL AT COLLAR TRANSITION ****
NGEN,2,10,240,249,3          ! Nodes 250-259 Coincident w/240-249 (by 3)
N,255,OR2,147.31             ! Outside Surface
N,261,OR2,149.63             ! Outside Surface
N,258,OR2,148.06
N,980,IR,149.38
N,981,11.755,149.38
N,982,IR2,149.38
N,983,12.317,149.38
N,984,OR2,149.38
N,990,OR2,146.68
FILL,240,990,1,251
NGEN,2,5,980,984,1,,-0.66
FILL,246,258,1,257
FILL,253,255,1,,1,3,3
FILL,237,990,1,991

/COM **** COLLAR AT BOTTOM EDGE OF PLUG (.155" above Sealing Surface) ****
NGEN,2,3,259,,,,0.245         ! Nodes 262

/COM **** COLLAR AT TOP EDGE OF PLUG (2" above bottom Edge) ****
NGEN,2,9,262,,,,2.00          ! Nodes 271
FILL,262,271,2

/COM **** COLLAR AT BASE OF THREADS ****
N,274,IR3,152.00
N,1000,IR2,152.00

/COM **** TOP TO COLLAR (WELD CLOSURE) ****
N,295,IR3,156.00
FILL,274,295
NGEN,3,1,259,295,3,(OR2-IR2)/2
NGEN,3,1,274,295,3,(OR2-IR3)/2

/COM ********** LOCKING & LIFTING RING GEOMETRY **********
RING1=7.94
```

```
RING2=9.375
RING3=9.625
RING4=10.19
RING5=12.23
LOCAL,11,0,,152.00          ! Local System z=0 at Base of Ring
CSYS,11

/COM **** TOP EDGE ****
N,401,RING1,6.13
CSYS,O
N,404,9.375,158.13
FILL,401,404,,,1
N,406,RING4,158.13
FILL,404,406,,,1            ! Top Edge

/COM **** LIFTING SURFACE ****
CSYS,11
N,421,RING1,5.13
N,424,RING2,5.13
FILL,421,424
N,426,RING4,5.13
FILL,424,426
FILL,401,421,1,,10,6,1
N,431,RING1,6.13-1.56
N,434,RING2,6.13-1.56
FILL

/COM **** BOLTING SURFACE ****
N,441,RING1,4
N,444,RING3,4
FILL
N,445,10.875-.197,4         ! Inside Edge of Bolt Hole
N,447,10.875+.197,4         ! Outside Edge of Bolt Hole
FILL
N,910,10.875-.197,4
N,911,10.9375+.197,4
N,448,RING5,4               ! O.D of Ring
CSYS,0                  ! Bolt Extension
N,924,10.875-.197,152.00        ! Double Nodes @ Bolt for Gap elements
N,925,10.875+.197,152.00
FILL,910,924,6,,2
FILL,911,925,6,,2
N,525,10.875-.197,151.874       ! Bottom of Bolt Extension
N,527,10.875+.197,151.874
FILL

/COM **** BOTTOM OF LIFTING/LOCKING RING ****
CSYS,11
NGEN,2,70,441,448,1,,-4     ! Bottom Surface of Lifting/Locking Ring
FILL,441,511,6,,10,8,1      ! Fill in Lifting/Locking Ring

/COM ************ SHIELD PLUG (offset y by 158.25) **************
LOCAL,20,0,,158.13
TYPE,2
PLUGR1=11.975
PLUGR2=11.45
```

SNF KES 5/23/97

```
PLUGR3=11.25
PLUGR4=7.89

/COM **** NODES AT PLUG AXIS (r=0) ****
N,601
N,602,0,-1
N,603,0,-1.994
N,606,0,-4.994
FILL,603,606,2,604
N,607,0,-6.25
N,610,0,-8.25
FILL,607,610,2,608
N,611,0,-8.75
N,613,0,-10.5
FILL,611,613

/COM **** NODAL GENERATION ****
NGEN,2,20,601,613,1,0.8825
NGEN,2,20,621,633,1,0.8825          ! Id Large Opening
NGEN,2,20,642,653,1,0.6875
NGEN,2,20,662,673,1,0.6875          ! Id Medium Opening
NGEN,2,20,683,693,1,0.4235          ! Id Small Opening
NGEN,2,10,706,713,1,0.9515          ! Center of Opening

N,730,5.4665,-1.994                 ! Od Small Opening
N,736,5.4665,-4.994
FILL,730,736,5,731
N,737,5.4665,-6.25
N,740,5.4665,-8.25
FILL,737,740,2,738
N,741,5.4665,-8.75
N,743,5.4665,-10.5
FILL,741,743
N,748,5.89,-1.0
NGEN,2,20,730,743,1,0.4235
FILL,748,750
N,766,7.265,0
NGEN,2,20,748,763,1,1.375
FILL,766,768
NGEN,3,20,766,768,1,0.3125
N,789,7.5775,-1.56
N,796,7.5775,-5.56
FILL,789,796,6
NGEN,2,20,789,796,1,0.3125
NGEN,3,20,777,783,1,0.3125

/COM **** UNDER LOCKING RING ****
N,824,8.5017,-6.25
N,827,8.5017,-8.25
FILL
N,828,8.5017,-8.75
N,830,8.5017,-10.5
FILL
NGEN,3,7,824,830,1,0.5616
NGEN,2,7,838,844,1,0.625
NGEN,2,7,845,851,1,0.625      ! Under Bolt
```

```
N,859,10.875+.197,-6.25
N,860,10.875+.197,-6.917
N,861,10.875+.197,-7.584
N,862,PLUGR2,-8.25
N,863,PLUGR2,-8.75
N,865,PLUGR3,-10.5
FILL,863,865,1
N,866,PLUGR1-0.288,-6.25
N,869,PLUGR1-0.288,-8.25
FILL,866,869,2
N,870,PLUGR1-0.288,-8.476
NGEN,2,5,866,870,1,0.288

/COM **** REFINING LIFTING EAR ****
CSYS,0
N,877,9.53,158.13
N,889,9.53,157.63
N,901,9.53,157.13
FILL,403,404,1,876
FILL,413,414,1,888
FILL,423,424,1,900
FILL,877,405,1,878
FILL,405,406,2,879,1
FILL,889,415,1,890
FILL,415,416,2,891,1
FILL,404,414,1,881
FILL,877,889,1,882
FILL,878,890,1,883
FILL,405,415,1,884
FILL,879,891,1,885
FILL,880,892,1,886
FILL,406,416,1,887
FILL,889,901,1,894
FILL,414,424,1,893
FILL,901,425,1,902
FILL,890,902,1,895
FILL,415,425,1,896
FILL,425,426,2,903,1
FILL,891,903,1,897
FILL,892,904,1,898
FILL,416,426,1,899
FILL,424,434,1,907
FILL,433,434,1,908
FILL,423,433,1,905
FILL,905,907


/COM **** FILTER GUARD PLATE ****
PLATE1=0.273
PLATE2=0.6575
PLATE3=1.357
PLATE4=10.25
PLATE5=11.25

N,1200,PLATE4,146.78
N,1202,PLATE5,146.78
```

```
FILL
NGEN,5,3,1200,1202,,,-0.85
NGEN,2,3,1212,1214,,,-0.25
N,1221,PLATE4,141.88
N,1222,10.75,141.88
N,1223,10.915,141.88
FILL,1215,1221,1,1218
FILL,1223,1217,1,1220
FILL,1216,1222,1,1219
N,1237,6.4375,143.38
FILL,1212,1237,3,1225,4
N,1249,3.578,143.38
FILL,1237,1249,2,1241,4
NGEN,2,1,1225,1249,4,,-0.25
NGEN,2,2,1226,1250,4,,-1.25
FILL,1226,1228,1,1227,,7,4
N,1253,2.625,145.255
N,1254,2.625,145.005
N,1256,2.625,143.38
FILL,1254,1256
N,1257,2.625,143.13
N,1259,2.625,141.88
FILL,1257,1259
NGEN,2,10,1253,1259,1,-0.5
NGEN,2,10,1263,1269,1,-0.768
N,1283,0.6575,145.255
N,1284,0.6575,145.005
N,1260,2.125,147.63
N,1270,1.357,147.63
N,1280,0.6575,147.63
N,1290,0.273,147.63
NGEN,3,1,1260,1290,10,,-0.5625

/COM **** NODES AT BOTTOM GAP ELEMENTS ****
NGEN,2,2000,1,10,1,,-1.00


/COM **** COUPLING NODES ****
/COM **** BETWEEN LIFTING/LOCKING RING & SHELL ****
CP,1,UY,508,277              ! Start Threads
CP,2,UY,498,280
CP,3,UY,488,283
CP,4,UY,478,286
CP,5,UY,468,289
CP,6,UY,458,292

/COM **** BETWEEN BOLT & LOCKING RING ****
CP,7,UY,445,910
CP,8,UX,445,910
CP,9,UY,447,911
CP,10,UX,447,911
*DO,I,1,7
CP,10+I,UY,445+10*I,910+2*I
*ENDDO
*DO,I,1,7
CP,17+I,UY,447+10*I,911+2*I
```

REVISION	0				PAGE 44
PREPARED BY / DATE	4/17/97				OF 52
CHECKED BY / DATE	4/17/97				

```
*ENDDO
*DO,I,1,7
CP,24+I,UX,445+10*I,910+2*I
*ENDDO
*DO,I,1,7
CP,31+I,UX,447+10*I,911+2*I
*ENDDO
NALL
EALL

/COM **** ELEMENT GENERATION FOR SHELL ****
TYPE,1
MAT,1

/COM **** BOTTOM OF SHELL ****
E,1,2,22,21
E,2,3,23,22
EGEN,8,1,-1
E,10,11,30
E,21,22,42,41
E,22,23,43,42
EGEN,10,1,-1
E,11,31,30
E,11,32,31

/COM **** SHELL ****
E,50,51,54,53
EGEN,2,1,-1
EGEN,5,3,-2

/COM **** FIRST TRANSITION ELEMENTS ****
E,65,66,100
E,100,66,101
E,67,101,66

/COM **** SINGLE SHELL ****
E,100,101,103,102
EGEN,40,2,-1

/COM **** SECOND TRANSITION ELEMENTS ****
E,190,180,191
E,180,181,191
E,181,192,191

/COM **** TOP SHELL (DOUBLE ELEMENT) ****
E,190,191,194,193
EGEN,2,1,-1
EGEN,18,3,-2
E,244,245,986,985
EGEN,2,1,-1
E,256,257,988,987
E,257,258,989,988
E,985,986,981,980
EGEN,4,1,-1
E,980,981,248,247
EGEN,2,1,-1
```

```
E,982,983,260,249
E,983,984,261,260

/COM **** COLLAR TRANSITION & THREADED REGIONS ****
E,237,991,251,240
E,991,990,251
E,240,251,254,253
E,251,990,255,254
E,253,254,257,256
EGEN,2,1,-1
E,259,260,263,262
EGEN,2,1,-1
EGEN,12,3,-2
E,271,274,1000

/COM **** MERGE COINCIDENT NODES FOR SHELL ****
ESEL,S,TYPE,,1
NSLE
NUMMRG,NODE,
EALL
NALL
/COM **** END OF SHELL/COLLAR ELEMENT GENERATION ****

/COM **** LOCKING/LIFTING RING ELEMENTS ****
TYPE,3
MAT,1
E,411,412,402,401
EGEN,2,1,-1
EGEN,2,10,-2
E,413,888,876,403
E,881,404,876
E,888,881,876
E,888,414,881
E,881,882,877,404
E,414,889,882,881
E,882,883,878,877
E,889,890,883,882
E,883,884,405,878
E,890,415,884,883
E,884,885,879,405
E,415,891,885,884
E,885,886,880,879
E,891,892,886,885
E,886,887,406,880
E,892,416,887,886
E,423,900,888,413
E,893,414,888
E,900,893,888
E,900,424,893
E,893,894,889,414
E,424,901,894,893
E,894,895,890,889
E,901,902,895,894
E,895,896,415,890
E,902,425,896,895
E,896,897,891,415
```

```
E,425,903,897,896
E,897,898,892,891
E,903,904,898,897
E,898,899,416,892
E,904,426,899,898
E,431,432,422,421
E,905,423,422
E,432,905,422
E,432,433,905
E,905,906,900,423
E,433,908,906,905
E,906,907,424,900
E,908,434,907,906
E,441,442,432,431
EGEN,2,1,-1
E,443,908,433
E,443,444,434,908
E,451,452,442,441
EGEN,3,1,-1
EGEN,7,10,-3
E,454,912,910,444
E,464,914,912,454
E,474,916,914,464
E,484,918,916,474
E,494,920,918,484
E,504,922,920,494
E,514,924,922,504
E,458,448,911,913
E,468,458,913,915
E,478,468,915,917
E,488,478,917,919
E,498,488,919,921
E,508,498,921,923
E,518,508,923,925

/COM **** BOLT ****
TYPE,5
MAT,5
E,455,456,446,445
EGEN,8,10,-1
E,456,457,447,446
EGEN,8,10,-1
/COM ********** END OF LOCKING/LIFTING RING **********

/COM **** SHIELD PLUG ELEMENTS ****
TYPE,2
MAT,1
E,602,622,621,601
EGEN,11,1,-1
EGEN,2,20,-11
E,613,1290,612
E,1290,1280,632,612
E,1280,633,632
E,633,1270,632
E,1270,652,632
E,1270,653,652
```

```
E,643,663,662,642
EGEN,10,1,-1
EGEN,2,20,-10
E,673,693,692,672
EGEN,2,20,-10
E,653,1260,652
E,1260,672,652
E,1260,673,672
E,707,717,716,706
EGEN,7,1,-1
E,717,737,736,716
EGEN,7,1,-1
E,731,751,750,730
EGEN,13,1,-1
E,749,769,768,748
EGEN,15,1,-1
E,767,787,786,766
EGEN,17,1,-1
EGEN,2,20,-17
E,818,825,824,817
EGEN,6,1,-1
EGEN,5,7,-6
E,853,860,859,852
EGEN,6,1,-1
E,860,867,866,859
EGEN,3,1,-1
E,867,872,871,866
EGEN,4,1,-1
/COM ************ END OF SHIELD PLUG ************

/COM ************ FILTER GUARD PLATE ************
E,1200,1201,858,851
E,1201,1202,865,858
E,1203,1204,1201,1200
EGEN,2,1,-1
EGEN,6,3,-2
E,1221,1222,1219,1218
E,1222,1223,1220,1219
E,1226,1215,1212,1225
E,1227,1218,1215,1226
E,1228,1221,1218,1227
E,1230,1226,1225,1229
EGEN,3,1,-1
EGEN,6,4,-3
E,1257,1250,1249,1256
EGEN,3,1,-1
E,1264,1254,1253,1263
EGEN,6,1,-1
E,1271,1261,1260,1270
EGEN,9,1,-1
E,1281,1271,1270,1280
EGEN,4,1,-1
E,1291,1281,1280,1290
EGEN,2,1,-1

/COM ************ CONTACT ELEMENTS ************
```

```
/COM **** BETWEEN LOCKING RING & SHIELD PLUG ****
TYPE,4
REAL,4
E,806,401
E,807,411
E,808,421
E,809,431
E,810,441
E,811,451
E,812,461
E,813,471
E,814,481
E,815,491
E,816,501
E,817,511

/COM **** BETWEEN SHIELD PLUG & BOTTOM OF BOLT
REAL,5
n,3000,10.875-.197,151.88
E,3000,525
E,852,526
E,859,527

/COM **** BETWEEN SHIELD PLUG & SHELL (ABOVE SEAL)
REAL,4
E,271,871
E,268,872
E,265,873
E,262,874

/COM **** BETWEEN SHIELD PLUG & SHELL (BELOW SEAL)
E,863,980

/COM **** BETWEEN SHIELD PLUG AND SEAL LIP
TYPE,4
REAL,6
E,248,870
E,249,875

/COM **** BOTTOM GAP ELEMENTS
TYPE,4
REAL,7
E,2001,1
EGEN,10,1,-1
NALL
EALL
/COM ********** END GAP ELEMENTS **********

/COM ********** BOUNDARY CONDITIONS **********
CSYS,0
NSEL,S,LOC,X,0
NSEL,R,LOC,Y,-1.33,158.14
D,ALL,UX,0
NALL
EALL
NSEL,S,NODE,,2001,2010
```

```
NSEL,S,LOC,X,11.44,11.69      ! Shield Plug (above seal)
NSEL,R,LOC,Y,149.87,149.89
SF,ALL,PRES,150
NALL
EALL
NSEL,S,LOC,X,11.44,11.46      ! Side of Shield Plug
NSEL,R,LOC,Y,149.37,149.89
SF,ALL,PRES,150
NALL
EALL
NSEL,S,LOC,X,11.24,11.46      ! Shield Plug Taper
NSEL,R,LOC,Y,147.62,149.39
SF,ALL,PRES,150
NALL
EALL
NSEL,S,LOC,X,11.24,11.26      ! Guard Plate Ring
NSEL,R,LOC,Y,143.12,147.64
SF,ALL,PRES,150
NALL
EALL
NSEL,S,LOC,X,10.914,11.26     ! Guard Plate Taper
NSEL,R,LOC,Y,141.87,143.14
SF,ALL,PRES,150
NALL
EALL
NSEL,S,LOC,X,1.34,10.92       ! Guard Plate Bottom
NSEL,R,LOC,Y,141.87,141.89
SF,ALL,PRES,150
NALL
EALL
lswrite,2
lssolve,1,2
FINI

/Post1                        ! Obtain Bolt/Seal Response
set,1
lpath,525,527          ! Bolt Cross Section
prsect
lpath,870,875          ! Seal Stop Cross Section
prsect
etable,Force,smisc,1   ! Seal Normal Force
esel,s,real,,8
pretab
eall
set,2
lpath,525,527          ! Bolt Cross Section
prsect
lpath,870,875          ! Seal Stop Cross Section
prsect
etable,Force,smisc,1   ! Seal Normal Force
esel,s,real,,8
pretab
fini
/exit
```

```
D,ALL,ALL,0
EALL
NALL

/com fine tune seal & bolt regions
nmodif,869,11.72,149.88
nmodif,870,11.72,149.65
type,2
emodif,420,1,3000,846,853,852
e,845,846,3000,3000
type,4
real,8
e,248,869      ! seal spring
cp,,uy,870,248  ! couple seal stop to interface
cp,,uy,875,249

FINI

!*****************************************************************
/COM ***************        SOLUTION PHASE        **************
/SOLUTION
time,1        ! bolt preload only
lswrite,1

time,2                    ! Preload + Pressure
/COM **** 150 PSI INTERNAL PRESSURE ****
NSEL,S,LOC,X,0,1.26          ! Bottom Plate
NSEL,R,LOC,Y,-0.45,-0.43
SF,ALL,PRES,150
NALL
EALL
NSEL,S,LOC,X,1.24,2.14
NSEL,R,LOC,Y,-0.45,0.45
SF,ALL,PRES,150
NALL
EALL
NSEL,S,LOC,X,2.12,11.51
NSEL,R,LOC,Y,0.43,0.45
SF,ALL,PRES,150
NALL
EALL
NSEL,S,LOC,X,11.49,11.51      ! Inside Shell
NSEL,R,LOC,Y,0.43,149.64
SF,ALL,PRES,150
NALL
EALL
NSEL,S,LOC,X,11.49,11.76      ! Edge Shell to Seal
NSEL,R,LOC,Y,149.62,149.64
SF,ALL,PRES,150
NALL
EALL
NSEL,S,LOC,X,11.67,11.69      ! Seal
NSEL,R,LOC,Y,149.64,149.89
SF,ALL,PRES,150
NALL
EALL
```

SNF ICES 5/23/97

COMPUTER RUN COVER SHEET

Project Number:	KH-8009-8
Computer Code:	ANSYS®-PC
Software Version:	5.0A
Computer System:	MS-DOS, Pentium® Processor
Computer Run File Number:	KH-8009-8-02
Unique Computer Run Filename:	MXBOLT.out
Run Description:	Analysis of MCO Closure Response, Maximum Bolt Load.
Run Date / Time:	26 February 1997 3:25:14 PM

Bob V. Winkel 4-17-97

Prepared By: Bob V. Winkel Date

4/17/97

Checked By: Zachary G. Sargent Date

REVISION	0				PAGE 52
PREPARED BY / DATE	BW 4/17/97				OF 52
CHECKED BY / DATE	ZGS 4/17/97				

PARSONS	CALCULATION PACKAGE	FILE NO: KH-8009-8-03 DOC. NO: HNF-SD-SNF-DR-003, Rev. 0, Appendix 5 PAGE 1 of 198

PROJECT NAME:	CLIENT:
MCO Final Design	Duke Engineering & Services Hanford, Inc.

CALCULATION TITLE:

MULTI-CANISTER OVERPACK (MCO) STRUCTURAL DROP ANALYSIS

PROBLEM STATEMENT OR OBJECTIVE OF CALCULATION:

THE OBJECTIVE OF THIS CALCULATION PACKAGE IS TO DEMONSTRATE THE STRUCTURAL ADEQUACY OF THE MCO SHELL AND THE FILTER GUARD PLATE IN ACCORDANCE WITH REVISION 3 OF THE MCO PERFORMANCE SPECIFICATION.

Q.A. Person 4/18/97

DOCUMENT REVISION	AFFECTED PAGES	REVISION DESCRIPTION	PREPARED BY INITIALS / DATE	CHECKED BY INITIALS / DATE	APPROVED BY INITIALS / DATE
0	1-198	Initial Issue	Zachary Sargent 4/18/97	Joe Nichols 4/17/97	Charles Temus 4/18/97

CONTENTS

	Page
1. INTRODUCTION	**7**
2. REFERENCES	**7**
3. ASSUMPTIONS	**8**
4. MATERIAL PROPERTIES	**8**
5. ACCEPTANCE CRITERIA	**9**
6. LOAD CONDITIONS & COMBINATIONS	**12**
7. FILTER GUARD PLATE	**13**
7.1 Introduction	**13**
7.2 Method of Analysis	**13**
7.3 Assumptions	**13**
7.4 Geometry	**14**
7.5 Material Properties	**14**
7.6 Acceptance Criteria	**14**
7.7 Load Combinations	**14**
7.8 Analysis	**14**
7.8.1 Support Ring	14
7.8.2 Weld Sizing	16
8. CLOSURE SEAL LEAKAGE	**18**
9. BARE BOTTOM END DROP	**20**
9.1 Introduction	**20**
9.2 Geometry	**20**
9.3 Assumptions	**20**
9.4 Analysis	**20**
9.4.1 Internal Pressure	20
9.4.2 Hydrostatic Pressure	21

10. TOP END DROP 23
10.1 Introduction 23
10.2 Geometry 23
10.3 Assumptions 24
10.4 Analysis 24
10.4.1 Internal Pressure 24
10.4.2 Hydrostatic Pressure 24
11. CSB TUBE DROP 26
11.1 Introduction 26
11.2 Geometry 27
11.3 Assumptions 27
11.4 Analysis 27
12. ANSYS© ANALYSIS 28
12.1 Boundary Conditions 29
12.2 Loading 29
12.2.1 Bare Bottom End Drop 29
12.2.2 Top End Drops 30
12.2.3 CSB Tube Drops 31
13. RESULTS 31
13.1 Buckling 41
13.1.1 End Drop 41
13.2 Minimum Shell Thickness 42

LIST OF TABLES

Page

TABLE 1: ASME CODE MATERIAL PROPERTIES FOR TYPE 304 STAINLESS STEEL 10

TABLE 2: ASME CODE MATERIAL PROPERTIES FOR TYPE 304L STAINLESS STEEL 11

TABLE 3: LEVEL D ALLOWABLE STRESSES - ELASTIC ANALYSIS - TYPE 304 STAINLESS STEEL 12

TABLE 4: LEVEL D ALLOWABLE STRESSES - ELASTIC ANALYSIS - TYPE 304L STAINLESS STEEL 12

TABLE 5: ANSYS MODEL STRESS REPORT SECTIONS 33

TABLE 6: CSB TUBE DROPS AND BOTTOM END DROP CALCULATED MAX. SHELL CIRCUMFERENCE 35

TABLE 7: TOP END DROPS CALCULATED MAX. SHELL CIRCUMFERENCE 35

TABLE 8: TOP END DROP (28G) WITHOUT CAP SUMMARY OF MAXIMUM STRESS INTENSITIES 36

TABLE 9: TOP END DROP (28G) WITH CAP SUMMARY OF MAXIMUM STRESS INTENSITIES 37

TABLE 10: BARE BOTTOM END DROP (54G) SUMMARY OF MAXIMUM STRESS INTENSITIES 38

TABLE 11: BARE BOTTOM END DROP W/ FINE MESH SUMMARY OF MAXIMUM STRESS INTENSITIES 38

TABLE 12: 28G CSB TUBE DROP WITH CAP SUMMARY OF MAXIMUM STRESS INTENSITIES 39

TABLE 13: 28G CSB TUBE DROP W/O CAP SUMMARY OF MAXIMUM STRESS INTENSITIES 40

TABLE 14: SUMMARY OF GUARD PLATE MAXIMUM DEFLECTIONS 40

LIST OF FIGURES

		Page
FIGURE 1:	MCO HALF-SYMMETRY ASSEMBLY WITHOUT LIFTING CAP	43
FIGURE 2:	DETAIL OF UPPER MCO ASSEMBLY WITHOUT LIFTING CAP	44
FIGURE 3:	MCO HALF-SYMMETRY ASSEMBLY WITH MODIFIED LIFTING CAP	45
FIGURE 4:	DETAIL OF UPPER MCO ASSEMBLY WITH MODIFIED LIFTING CAP	46
FIGURE 5:	MODEL WITH COUPLED NODES AT JACKING BOLT AND BUTTRESS THREADS	47
FIGURE 6:	BARE BOTTOM END DROP LOWER BOUNDARY CONDITIONS W/ GAP ELEMENTS	48
FIGURE 7:	BARE BOTTOM END DROP UPPER BOUNDARY CONDITIONS	49
FIGURE 8:	BARE BOTTOM END DROP PRESSURE DISTRIBUTION (INTERNAL & HYDROSTATIC)	50
FIGURE 9:	BARE BOTTOM END DROP STRESS INTENSITIES	51
FIGURE 10:	BARE BOTTOM END DROP UPPER ASSEMBLY STRESS INTENSITIES	52
FIGURE 11:	BARE BOTTOM END DROP LOWER ASSEMBLY STRESS INTENSITIES	53
FIGURE 12:	BARE BOTTOM END DROP LOWER ASSEMBLY RADIAL DISPLACEMENTS	54
FIGURE 13:	BARE BOTTOM END DROP W/ FINE MESH, LOWER STRESS INTENSITIES	55
FIGURE 14:	BARE BOTTOM END DROP W/ FINE MESH, CLOSE-UP	56
FIGURE 15:	BARE BOTTOM END DROP W/ FINE MESH, RADIAL DISPLACEMENTS	57
FIGURE 16:	TOP END DROP LOWER MCO BOUNDARY CONDITIONS	58
FIGURE 17:	TOP END DROP UPPER MCO BOUNDARY CONDITIONS W/ GAP ELEMENTS	59
FIGURE 18:	TOP END DROP PRESSURE DISTRIBUTION (HYDROSTATIC & INTERNAL)	60
FIGURE 19:	TOP END DROP UPPER MCO ASSEMBLY STRESS INTENSITIES	61
FIGURE 20:	TOP END DROP UPPER MCO ASSEMBLY RADIAL DISPLACEMENTS	62
FIGURE 21:	CSB TUBE DROP (NO CAP) PRESSURE DISTRIBUTION	63
FIGURE 22:	CSB TUBE DROP (NO CAP) UPPER MCO ASSEMBLY STRESS INTENSITIES	64
FIGURE 23:	CSB TUBE DROP (NO CAP) LOWER MCO ASSEMBLY STRESS INTENSITIES	65
FIGURE 24:	CSB TUBE DROP (NO CAP) LOWER MCO ASSEMBLY RADIAL DISPLACEMENTS	66
FIGURE 25:	TOP END DROP WITH MODIFIED CAP AND UPPER BOUNDARY CONDITIONS	67
FIGURE 26:	TOP END DROP WITH MODIFIED CAP AND LOWER BOUNDARY CONDITIONS	68
FIGURE 27:	TOP END DROP WITH MODIFIED CAP AND UPPER STRESS INTENSITIES	69
FIGURE 28:	TOP END DROP, MODIFIED CAP @ CLOSURE WELD, STRESS INTENSITIES	70
FIGURE 29:	TOP END DROP WITH MODIFIED CAP LOWER STRESS INTENSITIES	71
FIGURE 30:	TOP END DROP WITH MODIFIED CAP AND RADIAL DISPLACEMENTS	72
FIGURE 31:	CSB TUBE DROP WITH MODIFIED CAP AND UPPER BOUNDARY CONDITIONS	73
FIGURE 32:	CSB TUBE DROP WITH MODIFIED CAP AND LOWER BOUNDARY CONDITIONS	74

FIGURE 33: CSB TUBE DROP WITH MODIFIED CAP AND EQUIVALENT PRESSURE DISTRIBUTION 75
FIGURE 34: CSB TUBE DROP WITH MODIFIED CAP AND UPPER STRESS INTENSITIES 76
FIGURE 35: CSB TUBE DROP, MODIFIED CAP @ CLOSURE WELD STRESS INTENSITIES 77
FIGURE 36: CSB TUBE DROP WITH MODIFIED CAP AND LOWER STRESS INTENSITIES 78
FIGURE 37: CSB TUBE DROP WITH MODIFIED CAP AND RADIAL DISPLACEMENTS 79

APPENDICES

APPENDIX A: COMPUTER RUN OUTPUT SHEETS & INPUT FILE LISTINGS 80

1. INTRODUCTION

The MCO assembly is a single purpose Spent Nuclear Fuel (SNF) container that is capable of maintaining subcriticality at all times and maintain SNF containment and confinement after being closed and sealed. The MCO assembly consists of a shell, a shield plug and one to six SNF baskets.

This calculation documents the evaluation of the MCO shell and the filter guard plate under different drop loads. The loads considered are:

- 54 g Bare Bottom End Drop, 150 psi internal pressure, 132°C (270°F) temperature.
- 28 g Top End Drop without lifting cap, 150 psi internal pressure, 132°C (270°F) temperature.
- 28 g Top End Drop with modified lifting cap, 150 psi internal pressure, 132°C (270°F) temperature.
- 28 g CSB tube drop of a fully loaded MCO onto another MCO without modified lifting cap.
- 28 g CSB Tube Drop of a fully loaded MCO onto another MCO with modified lifting cap.

The evaluations are performed based on the criteria of the ASME Code. A combination of hand calculations and ANSYS© analysis is used.

2. REFERENCES

1. "Performance Specification for the Spent Nuclear Fuel Multi-Canister Overpack," Specification HNF-S-0426, Revision 3, February 1997.
2. ASME Boiler and Pressure Vessel Code, Section II - Materials, Part D - Properties, 1995 Edition with 1995 Addenda.
3. ASME Boiler and Pressure Vessel Code, Section III, Subsection NB - Class 1 Components, 1995 Edition with 1995 Addenda and 1995 Appendix F.
4. Roark, Raymond J., & Young, Warren C., "Formulas for Stress and Strain", 6th Edition, McGraw-Hill Book Company, New York, 1989.

5. Swanson Analysis Systems, Inc., ANSYS© Engineering Analysis System User's Manual, Volumes I, II, and III, Version 5.0A, 23 December 1992.

6. Parsons I & T, File KH-8009-8-05, " Stress Analysis of the Mark IA Storage and Scrap Basket", March 1997.

7. ASME Boiler and Pressure Vessel Code, Supplement No. 11 , Code Cases for Nuclear Components, 1995 Edition.

8. Appendix 1 of the MCO Design Report, MCO Drawings.

9. Appendix 13 of the MCO Design Report, Main Seal Data.

10. Manual of Steel Construction, American Institute of Steel Construction, 8th Edition, 1980.

3. ASSUMPTIONS

1. Pressure is applied uniformly.

2. The maximum weight of a fully loaded Mark IV basket is 3189.96 lbs. The following analyses are conservative using 3200 lbs for each basket.

3. Maximum shell diameter at the collar is increased from 25.27 to 25.31inches. Calculations performed in this analysis are based on 25.27 inches and therefore are conservative.

4. Others as noted.

4. MATERIAL PROPERTIES

The MCO shell, shield plug and filter guard plate are fabricated from Type 304L stainless steel. For the shell, Type 304L is used with the tensile and yield properties of Type 304 stainless steel (75 and 30 ksi, respectively). For this analysis, allowable stress values are taken from Section II, Part D of the Code (See [2]) and are listed in Table 1.

For the shield plug, locking ring, lifting cap and canister collar, Type 304L stainless steel may be replaced with Type 304N or 304LN at the discretion of the designer. The effects of thermal conductivity, thermal expansion, minimum yield strength and minimum tensile strength have been evaluated and it is the conclusion of the preparer that by using 304N

the minimum tensile and yield strengths are increased to 80 ksi and 35 ksi, respectively, for each material, thereby decreasing the appropriate stress ratios of this calculation.

5. ACCEPTANCE CRITERIA

This calculation considers only drop loads. Criteria for the evaluated drop loads must meet Section III, Subsection NB of the ASME Code with Appendix F [3] and Section 4.9.5 of the MCO Performance Specification [1].

The acceptance criteria of Appendix F (F-1331.1) of the ASME Code states that when an elastic analysis is used " the general primary membrane stress intensity P_M shall not exceed the lesser of $2.4S_M$ and $0.7S_U$ for materials included in Section II, Part D, Subpart I, Tables 2A and 2B for austenitic and high alloy steels, or $0.7S_U$ for ferritic materials included in Table 2A" and " the local primary membrane stress intensity P_L shall not exceed 150% of the limit for general primary membrane stress intensity P_M."

At the maximum drop temperature of 132°C (270°F), the allowables P_M and P_L are summarized in Tables 3 & 4.

For Type 304:

$$2.4S_M = (2.4)x(20.0) = 48.0 \text{ ksi}$$

$$0.7S_U = (0.7)x(67.5) = 47.25 \text{ ksi}$$

$$2.4S_M > 0.7S_U$$

$$\Rightarrow \text{use } P_M \leq 47.25 \text{ ksi}$$

For Type 304L:

$$2.4S_M = (2.4)x(16.7) = 40.08 \text{ ksi}$$

$$0.7S_U = (0.7)x(62.5) = 43.75 \text{ ksi}$$

$$2.4S_M < 0.7S_U$$

$$\Rightarrow \text{use } P_M \leq 40.08 \text{ ksi}$$

Table 1: ASME Code Material Properties for Type 304 Stainless Steel

Temperature		E[1]	α[2]	S_y[3]	S_m[4]	S_u[5]
°F	°C	(x 10^6 psi)	(x10^{-6} in./in./°F)	(ksi)	(ksi)	(ksi)
-20	-29	--	--	30.0	20.0	75.0
70	21	28.3	--	30.0	20.0	75.0
100	38	28.1[6]	8.55	30.0	20.0	75.0
200	93	27.6	8.79	25.1	20.0	71.0
270	132	27.2	8.94	23.3	20.0	67.5
300	149	27.0	9.00	22.5	20.0	66.0
392	200	26.5	9.18	20.9	18.8	64.5
400	204	26.5	9.19	20.8	18.7	64.4
500	260	25.8	9.37	19.4	17.5	63.5
600	316	25.3	9.53	18.3	16.4	63.5
700	371	24.8	9.69	17.7	16.0	63.5
707	375	24.8	9.70	17.6	16.0	63.5
800	427	24.1	9.82	16.9	15.2	62.7

[1] Table TM-1, Material Group G, P. 614

[2] Table TE-1, P 590-591

[3] Table Y-1, P. 530-531

[4] Table 2A, P. 326

[5] Table U, P. 441

[6] Underlined values determined by linear interpolation, all others taken from ASME Code, Section II, Part D.

Table 2: ASME Code Material properties for Type 304L Stainless Steel

Temperature		E[7]	α[8]	S_y[9]	S_m[10]	S_u[11]
°F	°C	(x 10^6 psi)	(x10^{-6} in./in./°F)	(ksi)	(ksi)	(ksi)
-20	-29		--	25.0	16.7	70.0
70	21	28.3	--	25.0	16.7	70.0
100	38	28.1[12]	8.55	25.0	16.7	70.0
200	93	27.6	8.79	21.3	16.7	66.2
270	132	27.2	8.94	19.8	16.7	62.5
300	149	27.0	9.00	19.1	16.7	60.9
392	200	26.5	9.18	17.6	15.9	58.7
400	204	26.5	9.19	17.5	15.8	58.5
500	260	25.8	9.37	16.3	14.8	57.8
600	316	25.3	9.53	15.5	14.0	57.0
700	371	24.8	9.69	14.9	13.5	56.2
707	375	24.8	9.70	14.9	13.5	56.2
800	427	24.1	9.82	14.4	13.0	55.5

Furthermore, the criteria of Section 4.9.5 of the MCO Performance Specification states that " In no case, including post accident conditions, is the MCO inside circumference below the bottom of the shield plug allowed to exceed 73.04 inches (23.25 in. ID x π)". Ultimately the MCO shell inside diameter is not to exceed 23.25 inches.

[7] Table TM-1, Material Group G, P. 614

[8] Table TE-1, P.590-591

[9] Table Y-1, P. 524

[10] Table 2A, P. 322

[11] Table U, P. 441

[12] Underlined values determined by linear interpolation, all others taken from ASME Code, Section II, Part D.

Although the MCO Performance Specification gives limits for Type 304L stainless steel, the values of Table 1 are used since the MCO drops must meet ASME Code requirements.

Table 3: Level D Allowable Stresses - Elastic Analysis - Type 304 Stainless Steel

Temperature		S_U (ksi)	Level D Stress Limits[1] (ksi)		
° F	°C	(Table 1)	P_m ($0.7S_U$)	P_L ($1.5P_m$)	P_M (or P_L) + P_B ($1.5P_m$)
270	132	67.50	47.25	70.88	70.88

Table 4: Level D Allowable Stresses - Elastic analysis - Type 304L Stainless Steel

Temperature		S_M (ksi)	Level D Stress Limits[1] (ksi)		
° F	°C	(Table 2)	P_m ($2.4S_M$)	P_L ($1.5P_m$)	P_M (or P_L) + P_B ($1.5P_m$)
270	132	16.7	40.08	60.12	60.12

6. LOAD CONDITIONS & COMBINATIONS

The MCO assembly is evaluated for the following conditions:

1) 54 g Bare Bottom End Drop with 150 psi internal pressure and a temperature of 132 °C (270°F).

2) 28 g Top End Drop with 150 psi internal pressure, a temperature of 132°C (270°F) without lifting cap.

3) 28 g Top End Drop with 150 psi internal pressure, a temperature of 132°C (270°F) with modified lifting cap.

[1] Level D Stress Limits taken from Appendix F, F-1331, 1995 ASME Code.

[1] Level D Stress Limits taken from Appendix F, F-1331, 1995 ASME Code.

In each of the above condition, the MCO assembly is fully loaded with five Mark IV baskets weighing each a maximum of 3,200 lbs (for a total weight of 16,000 lbs).

The 54 g Bare bottom End Drop binds the following cases :

- 25 g vertical "Piston Drop" into cask
- 27 g vertical drop with cask
- 35 g vertical drop into CSB tube

4) Drop of a MCO onto another MCO in the CSB tube. The bottom MCO receives the equivalent of 28g x the fully loaded top MCO onto its shield plug.

5) Drop of a MCO onto another MCO in the CSB tube. The bottom MCO receives the equivalent of 28g x the fully loaded top MCO onto its modified lifting cap.

7. FILTER GUARD PLATE

7.1 Introduction

The guard plate on the MCO shield plug is evaluated for its ability to protect the internal filters in a top down drop load. The plate has to withstand a 28g load of the entire payload of the MCO including baskets. Conservatively, no credit is taken for the baskets to support any of the fuel. Service level D stress allowables are used for the acceptance criteria. The load level of 28 g's binds the loading case of 27.4 g's (lid down) in Table 3 of the MCO Performance Specification.

7.2 Method of Analysis

A hand calculation is performed for the buckling of the guard plate support ring. A hand calculation is also performed to size the weld between the ring and the shield plug and the weld between the plate and its supporting ring.

7.3 Assumptions

1. The fuel loads the plate uniformly
2. The baskets provide no support to any of the fuel

3. Temperature at impact is 132°C (270°F)
4. Maximum weight comes from 5 Mark IV baskets; each basket weighing a maximum of 3,200 lbs.

7.4 Geometry

The support ring is a 1 inch thick ring 4.25 inches high and 22.50 in. OD. Drawing H-2-828046, Rev C. "MCO Internal Filter Shield Plate" is used for reference and dimensions.

7.5 Material Properties

The guard plate and its support ring are fabricated from SA-240 Type 304L stainless steel.

At 132°C (270°F): $E = 27.2 \times 10^6$ psi $S_M = 16.7$ ksi $\upsilon = 0.3$

$S_Y = 19.8$ ksi $S_U = 62.5$ ksi

7.6 Acceptance Criteria

The guard plate must not deflect more than one inch as it needs to protect the filters. The support ring must also be checked for buckling.

7.7 Load Combinations

The only load considered for this calculation is an acceleration of the fuel at 28 g's for buckling check of the ring. For the welds, an acceleration of 101 g's is used as it provides a worst case acceleration for a side load.

7.8 Analysis

7.8.1 Support Ring

For the support ring, the assumption is that the entire load is taken on the ring.

The area of the ring is:

$$A_r = \pi \times \left[\frac{22.5^2}{4} - \frac{20.5^2}{4}\right] = 67.54\,in^2$$

and F = (5 baskets)(3200lbs)(28g) = 448,000 lbs

The stress in the ring is:

$$\sigma = \frac{F}{A_r} = \frac{448{,}000 lbs}{67.54 in^2} = 6633.1\,psi \text{ or } 6633\ psi$$

The stress σ is well below the allowables of Service Level D (See Table 2).

Assuming a uniform axial load p, the change in the height dimension can be found by:

From Roark's [4], Table 28, Case 1a.

$$\frac{R}{t} = \frac{10.25 in}{1.00 in} = 10.25$$

$$\Delta y = \frac{py}{Et}$$

where p= Unit Load = $\dfrac{448000 lbs}{(\pi) \times \left(\dfrac{20.5 + 22.5}{2}\right)} = 6633$ lbs/in

y = Ring Height = 4.25 inches

$$\Delta y = \frac{(6633 lbs/in) \times (4.25 in)}{(27.2 x 10^6 psi) \times (1.00 in)} = 0.001 \text{ inches}$$

Because of its geometry and height, buckling of the ring is not a concern as shown above.

7.8.2 Weld Sizing

Welding of the support ring to the shield plug and the guard plate to the support ring requires the use of structural welds. The size of the welds is determined as follows:

From Appendix 3, Calculation KH-8009-8-01, the nominal weights of the support ring and the guard plate are given as follows:

W_{RING} = 81.12 lbs

W_{PLATE} = 155.20 lbs

The center of gravity, from the bottom of the shield plug, of those two components is:

$$CG = \frac{(W_{PLATE})(X_{PLATE}) + (W_{RING})(X_{RING})}{W_{PLATE} + W_{RING}}$$

$$CG = \frac{(155.20lbs)\left(4.25in + \frac{1.50in}{2}\right) + (81.12lbs)\left(\frac{4.25in}{2}\right)}{(155.20lbs) + (81.12lbs)}$$

CG = 4.01 inches

The required length of weld is

$L_W = \pi D$ =70.7 inches

and the weld section modulus is

$$S_W = \frac{\pi(D)^2}{4} = \frac{\pi(22.50in)^2}{4}$$

S_W = 398 in^2

The rules and stress limits which must be satisfied for welds for any Level A through D Service are those given in Table NF-3324.5(a)-1 multiplied by the appropriate base material stress limit factor given in Table NF-3523(b)-1 for components supports. However, per Table NF-3523(b)-1, for Service Level D, the stress limit factors must be obtained from Appendix F (F-1334) of the Code.

From Table NF-3324.5(a)-1:

For the base metal (Type 304L) S_U @ 707°F = 56.2 ksi (from Table 1 above) therefore S_U for weld metal is 60 ksi.

The stress limits then become

For the base metal $F_W = 0.40(S_{Y,\ Base\ Metal}) = 0.40(14.9\ ksi) = 5.96$ ksi
For the weld metal $F_W = 0.30(S_{U,\ Weld}) = 0.30(60\ ksi) = 18.0$ ksi

And from Appendix F, F-1334 of the Code "the allowable stress presented for Level A Service Condition may be increased using the following factors: the smaller of 2 or $1.167\frac{S_U}{S_Y}$ if $S_U > 1.2S_Y$ or 1.4, if $S_U \leq 1.2S_Y$, where S_Y is the yield strength, in ksi, and S_U is the ultimate tensile strength, in ksi, both at temperature."

$1.2S_Y = 1.2(14.9) = 17.88 > S_U$, therefore

$$1.167\frac{S_U}{S_Y} = 1.167\frac{56.2ksi}{14.9ksi} = 4.38 > 2$$

Using a factor of 2, F_W then becomes:

For the base metal $F_W = 2(18.0\ ksi) = 36.0$ ksi
For the weld metal $F_W = 2(5.96\ ksi)$ 11.9 ksi

A 101g side drop is the worst possible case and therefore is considered.

$$f_{W1} = \frac{(101g)(W_{RING} + W_{PLATE})}{L_W} = \frac{(101g)(81.12lbs + 155.20lbs)}{70.7in}$$

f_{W1} = 338 lb/in.

$$f_{W2} = \frac{(101g)(W_{RING} + W_{PLATE})(CG)}{S_W} = \frac{(101g)(81.12lbs + 155.20lbs)(4.01in)}{398in^2}$$

f_{W2} = 240 lb/in.

$$f_W = \sqrt{(f_{W1})^2 + (f_{W2})^2} = \sqrt{(338lb/in)^2 + (240lb/in)^2}$$

f_W = 415 lb/in

The minimum weld size required is

$$\text{For the Throat} = \frac{415\sqrt{2}}{11900} = 0.0943in$$

$$\text{For the Base} = \frac{415}{36000} = 0.0115in$$

However, the minimum weld size per AISC Specification [10], Table1.17.2A is 5/16 inch. Therefore,

$Weld_{MIN}$ = 0.3125 in.

And the stresses in the 5/16 inch weld are then:

$$\text{For the Throat} = \frac{415\sqrt{2}}{0.3125in} = 1.88 \text{ ksi}$$

$$\text{For the Base} = \frac{415}{0.3125in} = 1.33 \text{ ksi}$$

8. CLOSURE SEAL LEAKAGE

A drop of one MCO onto another MCO inside the CSB Tube is defined by the MCO Performance Specification as a 28g load. This drop load is reacted at the top of the bottom MCO shield plug, which, in turn, is reacted through the closure seal / seal stop at the bottom of the shield plug. Section 13, Table 7 indicates that the seal stop does not exceed yield, but rather comes close to the allowable yield strength (22.7 ksi calculated v. 19.8 ksi allowed). This section evaluates the consequences when such seal stop exceeds minimum material yield strength. The seal stop is relatively narrow at 0.270 inches.

Given: W_{MCO} = Weight of fully loaded MCO = 19,374 lb.

G = G-load = 28

σ_Y = 304L minimum yield strength @ 132°C = 19.8 ksi

OD_{SP} = Shield plug outside diameter = 23.950 in.

t_{SS} = Seal stop width = 0.270 in.

A_{SS} = Seal stop area = 20.09 in^2

F_S = Minimum seal load = 135,000 lb. [9]

h_{SS} = Seal stop height = 0.155 in.

k_S = Seal spring constant = 2.42 x 10^6 psi [9]

The seal stop stress for a 28g drop is

$$\sigma_{SS} = \frac{(W_{MCO})(G)}{A_{SS}} = 2.70 \times 10^4 \text{ psi}$$

Estimating the plastic strain by conservatively assuming a strain hardening slope of 1.6 x 10^5 [6] psi gives:

$$\varepsilon_P = \frac{\sigma_{SS} - \sigma_Y}{1.6 \times 10^5 \, psi}$$

ε_P = 0.045 in/in

$\delta_P = (\varepsilon_P)(h_{SS})$

δ_P = 6.97 x 10^{-3} in.

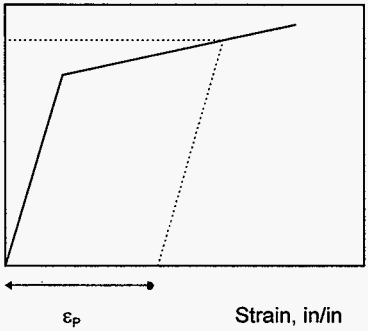

The seal load change due to plastic deformation in the stop is

$\delta F = (k_S)(\delta_P)$

δF = 1.125 x 10^3 lb

The seal load change due to plastic deformation is very small relative to a permissible drop of 110,000 lb (135,000 - 25,000 = 110,000 lb. See Calculation KH-8009-8-02), and therefore seal leakage is not expected.

9. BARE BOTTOM END DROP

9.1 Introduction

The MCO shell and its contents are evaluated for a two foot 54 g vertical drop onto a flat reinforced concrete surface. The MCO lands on the bottom end and there is no credible possibility of a side slap down secondary impact of the MCO.

The drop is performed at 132°C (270°F) with an internal pressure of 150 psi.

9.2 Geometry

The MCO geometry used in this calculation is shown in Figure 1. The MCO consists of a cylindrical shell, bottom plate, shield plug, locking ring and jacking bolts. The shell has a diameter which ranges from 24.00 inches to 25.27 inches. The shell diameter is increased to 25.27 inches at beginning of the canister collar to accommodate the shield plug and its locking ring. The MCO cylindrical shell has an inside diameter of 23.00 inches and a length of 139.76 inches. The bottom of the shell is a solid plate 0.880 inches thick at the center and 1.76 inches at the edges.

9.3 Assumptions

In the following analysis, it is assumed that the MCO is fully loaded with five Mark IV baskets, two of which are scrap baskets. The fuel is modeled with the properties of stainless steel except for the scrap baskets which have hydrostatic properties when externally loaded.

9.4 Analysis

9.4.1 Internal Pressure

The inside diameter of the MCO shell is 23.00 inches and its outer diameter is 24.00 inches. The wall thickness is therefore 0.5 inch. The stress through the shell due to the pressure load is then

$$\sigma_P = \frac{pR}{t}$$

where p = internal pressure = 150 psig

R = Mean Radius = (24.00+23.00)/4 = 11.75 in.

T = thickness of MCO shell = 0.5 in.

Therefore

$$\sigma_P = \frac{(150)(11.75)}{0.50} = 3525 \text{ psi or } 3.53 \text{ ksi}$$

9.4.2 Hydrostatic Pressure

No credit is taken for the baskets to support the fuel and the top and bottom scrap baskets' fuel is modeled with hydrostatic properties. Upon impact it is assumed that the bottom basket will be crushed. The values of K and γ are obtained from [6]. The pressure acting on the top of the bottom basket is equivalent to the weight of the four baskets above it and is:

Given:

A = MCO internal area = $\pi \times \frac{(23.00)^2}{4} = 415.48$ in^2

W_B= Maximum weight of a Mark IV basket = 3200 lbs

G = g-load = 54

K = Pressure Coefficient = 0.3

γ = Density of fuel = 0.217 lb/in^3

h = height of basket

$$P = \frac{(4 baskets) \times (3200 lbs)}{415.48 in^2} \times (54g) \times (0.3) = 623.86 \text{ psi}$$

The fuel exerts against the wall of the shell a horizontal pressure equal to the vertical pressure. At any level, the vertical pressure equals the weight of a 1-ft^2 column of fuel above that level. Hence, the horizontal pressure P_h at any level is

$$P_h = (K)(G)(\Delta h)(\gamma) + P$$

The pressure distribution is triangular.

For h= 26.431 inches, the additional pressure is

$$P_{add} = (0.217\ lb/in^3)(54g)(0.3)(26.431\ in) = 92.90\ psi$$

and the maximum pressure (the base of the triangular distribution) is

$$P = 92.90 + 623.86 = 716.76\ psi$$

This pressure is additional to the internal 150 psi stated above. In accordance with 4.9.5 of the MCO Performance Specification, the shell's maximum circumference is not to exceed 73.04 inches (23.25 x π). At 23.25 inches, the maximum radial displacement allowed is 0.25 inch diametrically, or 0.125 inch radially. For a pressure at a point measured 18.58 inches above the inside bottom plate of the MCO, the radial displacement of the circumference is:

From Roark's [4], Table 28, Cases 1b & 1d. Deformation in thin-walled pressure vessel, with a uniform radial pressure and an additional varying linearly radial pressure. A combination of Case 1b and 1d is used.

$$\Delta R_{1b} = \frac{qR^2}{Et} \qquad \Delta R_{1d} = \frac{q_o R^2 y}{Etl} \quad \text{and} \quad q = \frac{q_o y}{l}$$

where q = unit pressure
R = Radius of Curvature = 11.50 inches
E = Young's Modulus = 27.2 x 10^6 psi
t = Wall thickness of the pressure vessel = 0.50 inches
y = Vertical position coordinate = 18.58 inches
l = Shell length = 139.76 inches

Solving for q in Case 1b:

$$q = 150\ psi$$

therefore $\Delta R_{1b} = \frac{(150psi)\times(11.5)^2}{(27.2\times10^6\,psi)\times(0.5in)} = 0.00146$ inches

Solving for q_o in Case 1d:

$q = p + P + P_{add} = 150 + 623.86 + (0.217\ lb/in^3)(54g)(0.3)(26.431\ in - 18.580\ in)$

$q = 801.14$ psi

$q_o = \frac{ql}{y} = \frac{(801.14)(139.76)}{18.58} = 6026$ lb.

therefore $\Delta R_{1d} = \frac{(6026psi)(11.50)^2(18.58in)}{(27.2\times10^6\,psi)(0.50in)(139.76in)} = 0.00779$ inches

Adding the two deflections gives, $\Delta R_{total} = 0.00146 + 0.00779 = 0.00925$ inches

This radial displacement is well below the maximum of 0.125 inches

10. TOP END DROP

10.1 Introduction

The MCO shell and its contents are evaluated for two 28 g vertical drops. Reference [1] specifies a 25g drop. The following 28g drops bind the specified case.

The drops are performed at 132°C (270°F) with an internal pressure of 150 psi. One drop of the MCO is without the lifting cap and another drop is with the modified lifting cap.

10.2 Geometry

The MCO geometry used in this calculation is shown in Figures 1, 2, 3 and 4. Figures 1 and 2 refer to the MCO geometry without the lifting cap. Figures 3 and 4 refer to the MCO geometry with the lifting cap. The MCO consists of a cylindrical shell, bottom plate, shield plug, locking ring, jacking bolts and lifting cap. The shell has a diameter which ranges from 24.00 inches to 25.27 inches. The shell diameter is increased to 25.27 inches at beginning of the canister collar to accommodate the shield plug and its locking ring. The MCO shell has an inside diameter of 23.00 inches and a length of 139.76 inches. The bottom of the shell is a solid plate 0.880 inches thick at the center and 1.76 inches at the edges.

10.3 Assumptions

In the following analysis, it is assumed that the MCO is fully loaded with five Mark IV baskets, two of which are scrap baskets. The fuel is modeled with the properties of stainless steel except for the scrap baskets which have hydrostatic properties when externally loaded.

10.4 Analysis

10.4.1 Internal Pressure

The inside diameter of the MCO shell is 23.00 inches and its outer diameter is 24.00 inches. The wall thickness is therefore 0.5 inch. The stress through the shell due to the pressure load is then

$$\sigma_P = \frac{pR}{t}$$

where p = internal pressure = 150 psig

R = Mean Radius = (24.00+23.00)/4 = 11.75 in.

T = thickness of MCO shell = 0.5 in.

Therefore

$$\sigma_P = \frac{(150)(11.75)}{0.50} = 3525 \text{ psi or } 3.53 \text{ ksi}$$

10.4.2 Hydrostatic Pressure

No credit is taken for the baskets to support the fuel and the top and bottom scrap baskets' fuel is modeled with hydrostatic properties. Upon impact it is assumed that the top basket will be crushed. The values of K and γ are obtained from [6]. The pressure acting on the bottom of the top basket is equivalent to the weight of the four baskets above it and is:

Given:

A = MCO internal area = $\pi \times \frac{(23.00)^2}{4} = 415.48 \text{ in}^2$

W_B= Maximum weight of a Mark IV basket = 3200 lbs

G = g-load = 28

K = Pressure Coefficient = 0.3

γ = Density of fuel = 0.217 lb/in^3

h = height of basket

$$P=\frac{(4 baskets)\times(3200 lbs)}{415.48 in^2}\times(28g)\times(0.3)=258.79 \text{ psi}$$

The fuel exerts against the wall of the shell a horizontal pressure equal to the vertical pressure. At any level, the vertical pressure equals the weight of a 1-ft^2 column of fuel above that level. Hence, the horizontal pressure P_h at any level is

$$P_h = (K)(G)(\Delta h)(\gamma)+ P$$

The pressure distribution is triangular.

For h= 27.24 inches, the additional pressure would be

$$P_{add}=(0.217 \text{ lb/in}^3)(28g)(0.3)(27.24 \text{ in}) = 49.65 \text{ psi}$$

and the maximum pressure (the base of the triangular distribution) would be

$$P = 49.65+ 258.79 = 308.44 \text{ psi}$$

This pressure is additional to the internal 150 psi pressure stated above. In accordance with 4.9.5 of the MCO Performance Specification, the shell's maximum circumference is not to exceed 73.04 inches (23.25 x π). At 23.25 inches, the maximum radial displacement is 0.25 inch diametrically, or 0.125 inch radially. For a pressure at a point measured 24.14 inches below the filter guard plate, the radial displacement of the circumference is:

From Roark's [4], Table 28, Cases 1b & 1d. Deformation in thin-walled pressure vessel, with a uniform radial pressure and an additional varying linearly radial pressure. A combination of Case 1b and 1d is used.

$$\Delta R_{1b}=\frac{qR^2}{Et} \qquad \Delta R_{1d}=\frac{q_o R^2 y}{Etl} \quad \text{and} \quad q=\frac{q_o y}{l}$$

where q = unit pressure
R = Radius of Curvature = 11.50 inches

E = Young's Modulus = 27.2 x 10^6 psi
t = Wall thickness of the pressure vessel = 0.50 inches
y = Vertical position coordinate = 24.14 inches
l = Shell length = 139.76 inches

Solving for q in Case 1b:

q = 150 psi

therefore $\Delta R_{1b} = \frac{(150 psi) \times (11.5)^2}{(27.2 \times 10^6 psi) \times (0.5 in)} = 0.00146$ inches

Solving for q_o in Case 1d:

$q = p + P + P_{add} = 150 + 258.79 + (0.217\ lb/in^3)(28g)(0.3)(27.24\ in - 24.14\ in)$

q= 414.44 psi

$q_o = \frac{ql}{y} = \frac{(414.44)(139.76)}{24.14} = 2399$ lb.

therefore $\Delta R_{1d} = \frac{(2399 psi)(11.50)^2(24.14 in)}{(27.2 \times 10^6 psi)(0.50 in)(139.76 in)} = 0.00403$ inches

Adding the two deflections gives, ΔR_{total} = 0.00146 + 0.00403 = 0.00549 inches

This radial displacement is well below the maximum of 0.125 inches

11. CSB TUBE DROP

11.1 Introduction

The MCO is evaluated for a 28g drop in the CSB tube. This simulates the vertical drop of one MCO onto another MCO. The top of the lower MCO being impacted receives a 28 g vertical load and is evaluated with and without the lifting cap on. This evaluation of the CSB Tube drop concentrates on the buckling of the shell and its impact.

The drop is performed at 132°C (270°F) with an internal pressure of 150 psi.

11.2 Geometry

The MCO geometry used in this calculation is shown in Figures 1, 2, 3, and 4. Figures 1 and 2 refer to the MCO without lifting cap and Figure 3 and 4 refer to the MCO with lifting cap. The MCO consists of a cylindrical shell, bottom plate, shield plug, locking ring, jacking bolts and lifting cap. The shell has a diameter which ranges from 24.00 inches to 25.27 inches. The shell diameter is increased to 25.27 inches at beginning of the canister collar to accommodate the shield plug and its locking ring. The MCO shell has an inside diameter of 23.00 inches and a length of 139.76 inches. The bottom of the shell is a solid plate 0.880 inches thick at the center and 1.76 inches at the edges.

11.3 Assumptions

In the following analysis, it is assumed that the MCO impacting the lower MCO is fully loaded with five Mark IV baskets. The lower MCO is restricted by the CSB Tube.

11.4 Analysis

As stated above, this load case analyzes the drop of a fully loaded MCO onto another one. The lower MCO is of concern since the shell is subject to buckling. The top of the MCO being impacted receives the equivalent of a 28g load from the upper MCO. The upper MCO lands on the shield plug or the lifting cap of the lower MCO, depending on the evaluation.

The equivalent pressure received by the top of the lower MCO shield plug is calculated by taking the weight of a fully loaded, dry MCO, multiplied by the g-load and divided by the area of the shield plug or the lifting cap.

Where the MCO being impacted does not have the lifting cap, it is assumed that all the weight hits the shield plug first, and not the locking ring. From Appendix A of [1], the weight of a fully loaded MCO, dry, with upper shield plug and five loaded Mark IV baskets is 19,374 lbs. The area of the shield plug does not include the process ports, therefore it is

$$A_{SP} = 39.54 \text{ in}^2$$

The equivalent pressure applied is

P_{EQ} = (28)(19,374) = 542,472 lbs

therefore $\frac{P_{EQ}}{A_{SP}} = 1371958$ or 13,720 psi

Where the MCO being impacted has the lifting cap, it is assumed that all the weight is distributed evenly. That distribution is represented as an equivalent pressure acting on top of the lifting cap. The area of the cap is:

A_{CAP} = 326.21 in^2

The equivalent pressure applied is

P_{EQ} = (28)(19,374) = 542,472 lbs

therefore $\frac{P_{EQ}}{A_{SP}} = 1662.95$ psi

The bottom shell of the MCO sees a stress of P_{EQ}/A_{SHELL} equal to

$$A_{SHELL} = (\pi)\frac{(24.00)^2 - (23.00)^2}{4} = 36.91 \text{ in}^2$$

$$\sigma_{SHELL} = \frac{P_{EQ}}{A_{SHELL}} = 14697 \text{ psi}$$

Buckling of the shell is evaluated using the ANSYS program.

12. ANSYS© ANALYSIS

In addition to the hand calculations described in Sections 8 and 9, an evaluation of the MCO assembly are performed using the finite element model shown in Figures 1 and 3. The model is axisymmetric (2-D) and was developed with PLANE42 elements with 2 degrees of freedom at each node.

12.1 Boundary Conditions

Figures 1 and 3 represent the axysimmetric models used in the analyses . Symmetry boundary conditions are applied at the edges of the model. One should note that nodes between the jacking bolts and the locking ring, and nodes between locking ring threads and shell threads are coupled (See Figure 5). The gap elements between the shield plug and the bottom of the jacking bolts have a very small positive interference to represent the preload on the bolts.

In the Bare Bottom End Drop (54g load), gap elements are used at the bottom of the model in order to anchor the model. In the Top End Drops (28g load), with and without lifting cap, gap elements are used at the top of the model in order to anchor the model. The "free" end of the gap elements are restrained in both X- and Y-directions (Figures 6, 14, 22 & 29). In the CSB Tube Drop (28g equivalent), the load is applied at the top of the shield plug or at the top of the lifting cap, and gap elements at the bottom of the model are also restrained in both X- and Y-directions.

12.2 Loading

12.2.1 Bare Bottom End Drop

The Bare Bottom End Drop consists of two models. The first model has a coarse mesh at the bottom (shell to bottom plate interface) and the second has a finer mesh to show that refining the mesh at that section of the model does not change the results. In both cases the geometry is identical. Figure 8 shows the hydrostatic pressure with 150 psi internal pressure for the Bare Bottom End Drop. The pressure exerted on the bottom plate of the MCO is equivalent to the weight of five loaded Mark IV baskets distributed over the area of the plate. It is

A_p = MCO Bottom Plate area = $\pi \times \frac{(23.00)^2}{4} = 415.48\ in^2$

W_B= Maximum weight of a Mark IV basket = 3200 lbs

$P_{bp} = \frac{5(W_B)(54g)}{A_p} = \frac{5 \times (3{,}200lbs) \times (54g)}{415.48in^2} = 2079.5$ psi

The hydrostatic pressure is modeled and input in accordance with the above hand calculations (See Section 8). Tables 10 and 11 are summaries of maximum stress intensities at different sections of the MCO assembly. The area of interest in this model is

where and how the hydrostatic pressure affects the MCO shell. Figure 10 shows the stress intensities at the process tube guide and guard plate interface. Figure 11(coarse mesh) and Figures 13 & 14 (fine mesh) show the stress intensities in the bottom of the MCO shell where the hydrostatic pressure is applied. Figure 12 (coarse mesh) and Figure 15 (fine mesh) represent the radial displacements in the shell where hydrostatic pressure is applied.

12.2.2 Top End Drops

Figure 15 shows the internal pressure distribution for both hydrostatic and 150 psi internal pressure for the 28 g Top End Drop without lifting cap. The internal pressure distribution is the same for the 28 g Top End Drop with lifting cap. The pressure exerted on the filter guard plate is equivalent to the weight of five loaded Mark IV baskets distributed over the area of the plate. It is

$$A_{gp} = \text{Filter Guard Plate Area} = \pi \times \left[\frac{(22.50)^2}{4} - \frac{(4.28)^2}{4} \right] = 383.22 \text{ in}^2$$

W_B= Maximum weight of a Mark IV basket = 3200 lbs

$$P_{bp} = \frac{5(W_B)(28g)}{A_{gp}} = \frac{5 \times (3{,}200lbs) \times (28g)}{383.22in^2} = 1169.04 \text{ psi}$$

The hydrostatic pressure is modeled and input in accordance with the above hand calculations (See Section 9). Slight differences in the results may exist because the model applies the pressure normal to the face of the element instead of applying the pressure at the nodes of the element. It is assumed that the fuel does not exert a pressure between the shield plug and the shell.

The area of interest in this model is where and how the hydrostatic pressure affects the MCO shell. Figure 16 shows the stress intensities in the top of the MCO shell (below guard plate) where the hydrostatic pressure is applied. Figures 17 & 27 represent the radial displacements in the shell where hydrostatic pressure is applied, for a Top End Drop without lifting cap and for a Top End Drop with lifting cap, respectively. Table 4 is a summary of the maximum stress intensities at different sections of the MCO assembly.

12.2.3 CSB Tube Drops

The CSB Tube Drops were evaluated without internal pressure for more conservative results. Adding internal pressure lessens the compressive stresses in the shell, yielding non-conservative results.

Figure 18 represents the pressure distribution on the shield plug, for the pressure equivalent to that of a fully loaded MCO x 28g. Figures 19 and 20 show the stress intensities for the top and bottom MCO assembly without lifting cap, respectively. Figure 21 represents the radial displacements in the shell of the MCO assembly without lifting cap. The equivalent pressure is given in Section 11.4.

Figures 28 & 29 show the upper an lower boundary conditions applied for the model with lifting cap. Figure 30 represents the equivalent pressure distribution on the lifting cap (See Section 11.4 for equivalent pressure). Figures 31 through 33 show stress intensities of the model and Figure 34 show the radial displacements of the model, again with lifting cap.

13. RESULTS

The PLANE42 elements used for these ANSYS© analyses report stresses mainly in the shell and in the lifting cap where the pressure distribution is rather great. These analyses show that ASME Code allowables (Subsection NB and Appendix F) are not violated. The radial displacements due to the load cases and the pressure distribution are well within the allowables given by the MCO Performance Specification. Stresses are classified as membrane plus bending stresses: $P_m + P_B$.

The results are summarized in the following tables. Table 5 is a compilation where the stress report sections are obtained using the LPATH/PRSECT command. In Tables 6 and 7, the maximum radial displacement is the interior nodal radial displacement. The stress ratios in Tables 8 through 13 are calculated as the ratio of the maximum stress intensity to the allowed stress for that type of stress intensity.

For the CSB Tube Drop with lifting cap, the corresponding ANSYS input and output files are CSBMC.inp and CSBMC.out, respectively.

For the CSB Tube Drop without lifting cap, the corresponding ANSYS input and output files are CSB.inp and CSB.out, respectively.

For the Top End Drop with lifting cap, the corresponding ANSYS input and output files are TEDMC.inp and TEDMC.out, respectively.

For the Top End Drop without lifting cap, the corresponding ANSYS input and output files are TED.inp and TED.out, respectively.

For the Bare Bottom End Drop, coarse mesh, the corresponding ANSYS input and output files are BED.inp and BED.out, respectively.

For the Bare Bottom End Drop, fine mesh, the corresponding ANSYS input and output files are FINE.inp and FINE.out, respectively.

Table 5: ANSYS Model Stress Report Sections

Component	Section	Inside Node	Outside Node
Bottom Plate	1	1	41
	2	4	44
	3	6	46
	4	9	49
	5	10	50
Lower Shell	6	50	52
	7	53	55
	8	62	64
	9	65	67
Middle Shell	10	100	101
	11	116	117
	12	122	123
	13	130	132
	14	134	135
	15	150	152
	16	156	157
	17	170	171
	18	180	181
Upper Shell	19	202	204
	20	235	237
	21	985	989
	22	262	264
	23	277	279
	24	292	294
Shield Plug	25	601	641
	26	601	613
	27	603	703
	28	606	706
	29	766	806
	30	748	808
	31	862	873
	32	870	874
	33	870	875

Table 5: ANSYS Model Stress Report Sections, Cont'd

Component	Section	Inside Node	Outside Node
Support Ring	34	1200	1202
	35	1209	1211
Guard Plate	36	1229	1232
	37	1237	1240
	38	1245	1248
Process Tube Adapter	39	1284	1263
	40	1261	1291
Locking Ring	41	431	434
	42	406	426
	43	404	424
Lifting Cap	44	1120	1097
	45	1120	1168
	46	1174	1149
	47	1176	1152
	48	1177	1155
	49	1178	1158
	50	1179	1161
	51	1162	1164
	52	295	297
	53	1021	1027
	54	1071	1077
	55	1138	1169

Table 6: CSB Tube Drops and Bottom End Drop Calculated Max. Shell Circumference

Load Case	28g CSB Tube Drop Without Lifting Cap	28g CSB Tube Drop With Lifting Cap	54g Bottom End Drop Coarse Mesh	54g Bottom End Drop Fine Mesh
Max. Radial Displacement	0.02374 in.	0.02374 in.	0.02393 in.	0.02393 in.
Undeformed Shell Diameter	23.00 in.	23.00 in.	23.00 in.	23.00 in.
Max. Deformed Shell Diameter	23.0475 in.	23.0475 in.	23.0479 in.	23.0479 in.
Max. Calculated Circumference	72.405 in.	72.405 in.	72.407 in.	72.407 in.
Allowed Circumference	73.04 in.	73.04 in.	73.04 in.	73.04 in.

Table 7: Top End Drops Calculated Max. Shell Circumference

Load Case	28g Top End Drop Without Lifting Cap	28g Top End Drop With Lifting Cap
Maximum Radial Displacement	0.02376 inches	0.02847 inches
Undeformed Shell Diameter	23.00 inches	23.00 inches
Maximum Deformed Shell Diameter	23.048 inches	23.0569 inches
Maximum Calculated Circumference	72.406 inches	72.436 inches
Allowed Circumference	73.04 inches	73.04 inches

From Tables 6 and 7, it is apparent that the maximum internal deformed shell circumference will not exceed the allowed value of 73.04 inches [1].

For the following tables the lower shell, middle shell and upper shell have the properties of Type 304 stainless steel. The bottom plate, shield plug and locking ring have the properties of Type 304L stainless steel.

Therefore, in calculating the stress ratios, the following apply:

Type 304: S_M = 20.0 ksi @ 132°C (270°F)

Type 304L: S_M = 16.7 ksi @ 132°C (270°F)

Table 8: Top End Drop (28g) without Cap Summary of Maximum Stress Intensities

	Membrane Stress Intensities		Membrane + Bending Stress Intensities	
COMPONENT	Max SI	SR	Max SI	SR
Bottom Plate	3.19 ksi	0.07	8.65 ksi	0.12
Lower Shell (304)	3.40 ksi	0.07	8.36 ksi	0.12
Middle Shell (304)	3.77 ksi	0.08	3.85 ksi	0.05
Upper Shell (304)	11.13 ksi	0.24	11.85 ksi	0.17
Support Ring	7.43 ksi	0.16	17.03 ksi	0.24
Tube Adapter	10.27 ksi	0.22	16.55 ksi	0.23
Shield Plug	7.18 ksi	0.16	8.42 ksi	0.12
Guard Plate	4.48 ksi	0.09	15.04 ksi	0.21

Note:

SR = $\frac{SI}{0.7S_U}$ or SR = $\frac{SI}{1.5P_M}$ for Type 304 stainless steel

SR = $\frac{SI}{2.4S_M}$ or SR = $\frac{SI}{1.5S_M}$ for Type 304L stainless steel

Table 9: Top End Drop (28g) with Cap Summary of Maximum Stress Intensities

	Membrane Stress Intensities		Membrane + Bending Stress Intensities	
COMPONENT	Max SI	SR	Max SI	SR
Bottom Plate	3.19 ksi	0.07	8.65 ksi	0.12
Lower Shell (304)	3.80 ksi	0.08	8.36 ksi	0.12
Middle Shell (304)	17.93 ksi	0.38	18.44 ksi	0.26
Upper Shell (304)	17.52 ksi	0.37	19.43 ksi	0.27
Support Ring	7.85 ksi	0.17	19.8 ksi	0.28
Tube Adapter	10.09 ksi	0.21	17.18 ksi	0.24
Shield Plug	3.69 ksi	0.08	4.72 ksi	0.06
Lifting Cap	22.77 ksi	0.48	23.35 ksi	0.33
Guard Plate	4.42 ksi	0.09	15.77 ksi	0.22
Weld	21.45 ksi	0.45	26.48 ksi	0.37

Table 10: Bare Bottom End Drop (54g) Summary of Maximum Stress Intensities

	Membrane Stress Intensities		Membrane + Bending Stress Intensities	
COMPONENT	Max SI	SR	Max SI	SR
Bottom Plate	3.50 ksi	0.08	8.04 ksi	0.13
Lower Shell (304)	9.02 ksi	0.19	22.13 ksi	0.31
Middle Shell (304)	21.37 ksi	0.45	21.90 ksi	0.31
Upper Shell (304)	5.33 ksi	0.11	8.98 ksi	0.13
Support Ring	0.60 ksi	0.01	1.13 ksi	0.02
Tube Adapter	0.90 ksi	0.02	1.83 ksi	0.03
Shield Plug	6.83 ksi	0.17	8.15 ksi	0.14
Guard Plate	0.50 ksi	0.01	1.44 ksi	0.02

Table 11: Bare bottom End Drop w/ Fine Mesh Summary of Maximum Stress Intensities

	Membrane Stress Intensities		Membrane + Bending Stress Intensities	
COMPONENT	Max SI	SR	Max SI	SR
Bottom Plate	3.45 ksi	0.08	8.02 ksi	0.13
Lower Shell (304)	9.35 ksi	0.19	22.33 ksi	0.32
Middle Shell (304)	21.49 ksi	0.45	21.89 ksi	0.31
Upper Shell (304)	5.25 ksi	0.11	8.91 ksi	0.14
Support Ring	0.60 ksi	0.01	1.42 ksi	0.02
Tube Adapter	0.90 ksi	0.02	1.83 ksi	0.03
Shield Plug	6.61 ksi	0.16	8.06 ksi	0.13
Guard Plate	0.50 ksi	0.01	1.45 ksi	0.02

Table 12: 28g CSB Tube Drop with Cap Summary of Maximum Stress Intensities

	Membrane Stress Intensities		Membrane + Bending Stress Intensities	
COMPONENT	Max SI	SR	Max SI	SR
Bottom Plate	9.83 ksi	0.21	13.59 ksi	0.19
Lower Shell (304)	14.74 ksi	0.31	17.24 ksi	0.24
Middle Shell (304)	14.48 ksi	0.31	14.64 ksi	0.21
Upper Shell (304)	14.65 ksi	0.31	14.88 ksi	0.21
Shield Plug	11.79 ksi	0.25	13.80 ksi	0.19
Lifting Cap	22.83 ksi	0.48	22.90 ksi	0.32
Weld	21.55 ksi	0.46	26.20 ksi	0.37

Table 13: 28g CSB Tube Drop w/o Cap Summary of Maximum Stress Intensities

	Membrane Stress Intensities		Membrane + Bending Stress Intensities	
COMPONENT	Max SI	SR	Max SI	SR
Bottom Plate	9.85 ksi	0.21	13.62 ksi	0.19
Lower Shell (304)	14.78 ksi	0.31	17.29 ksi	0.24
Middle Shell (304)	14.55 ksi	0.31	14.68 ksi	0.21
Upper Shell (304)	14.63 ksi	0.31	14.80 ksi	0.21
Shield Plug	22.57 ksi	0.48	22.73 ksi	0.32

Table 14: Summary of Guard Plate Maximum Deflections

Load Case	Maximum Plate Deflection (in.)
28g CSB Tube Drop with Cap	0.173
28g CSB Tube Drop without Cap	0.170
54g Bare Bottom End Drop	0.205
28g Top End Drop with Cap	0.0182
28g Top End Drop without Cap	0.0273

Tables 10 and 11 represent the maximum stress intensities at different sections of the model. However, Table 11 has the maximum stress intensities for the model with a finer mesh at the lower shell. As one can see the stresses are very comparable and meet allowables.. Figures 13 through 15 depict the Bare Bottom End Drop with the finer mesh and its resulting radial displacements.

13.1 Buckling

13.1.1 End Drop

The maximum compressive membrane stress is checked according to Paragraph NB-3133.6 of [3].

The weight of the MCO assembly, W_s, is 3424.17 lbs or 3425 lbs [1]. The cross-sectional of the shell is

$$A_s = \pi \times \left(\frac{D_O^2}{4} - \frac{D_I^2}{4} \right) = \pi \times \left(\frac{24.00^2}{4} - \frac{23.00^2}{4} \right)$$

$$A_s = 36.91 \text{ in}^2$$

The maximum compressive stress in the shell due to an end drop is:

$$\sigma_a = \frac{A \times W_s}{A_S} = \frac{54g \times (3425lbs)}{36.91in^2}$$

$$\sigma_a = 5010.84 \text{ psi}$$

Note that this value is greater than the maximum axial compressive stress (σ_Y) in the shell for both top (3162 psi) and bottom end drops (4683 psi). The difference is the result of the applied internal pressure.

Per Paragraph NB-3133.6 of [3], the parameter A is:

$$A = \frac{0.125}{\frac{R_C}{T}}$$ where T = Thickness of Shell and R_C = Inside Radius of Shell

$$A = \frac{0.125}{\left(\frac{11.50}{0.50} \right)} = 0.0054$$

The corresponding value of B, obtained from HA-1 of [2], at 132°C (270°F) is 11,500 psi (interpolated value). Per paragraph F-1331.5 of [3], the allowable compressive stress is equal to 150% of B, or 17,250 psi. Since this value is greater than the computed compressive stress, the MCO shell meets the buckling criterion for an end drop.

As stated above, the maximum allowed compressive stress is 17,250 psi. Tables 12 and 13 of Section 12 report maximum membrane stresses of 14.74 ksi and 14.78 ksi with and without the lifting cap, respectively. Since these stresses do not exceed the maximum allowed , the MCO shell meets the buckling criterion for a CSB Tube drop.

13.2 Minimum Shell Thickness

The minimum shell thickness permitted is

σ_M = 17250 psi

D_O = 24.00 inches

P_{MAX} = 542,472 lbs

$$A_{MAX} = \frac{542{,}472 lbs}{17388 psi} = 31.4 in^2$$

therefore for a 24.00 inch outside diameter, the maximum permissible inside diameter is

$$D_{I,MAX} = \sqrt{\left(D_O^2\right) - \frac{4A_{MAX}}{\pi}} = 23.15 in$$

and the minimum permissible thickness is

$$\frac{D_O - D_I}{2} = 0.425 \text{inches}$$

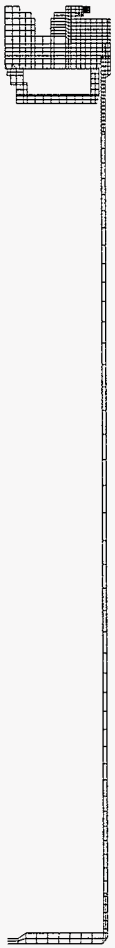

Figure 1: MCO Half-Symmetry Assembly without Lifting Cap

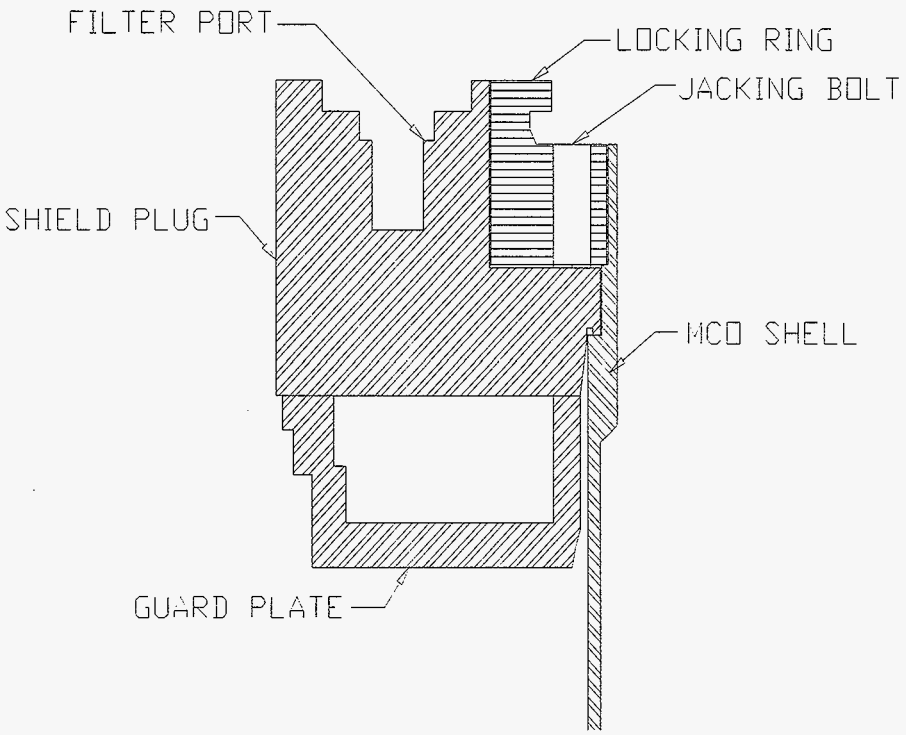

Figure 2: Detail of Upper MCO Assembly without Lifting Cap

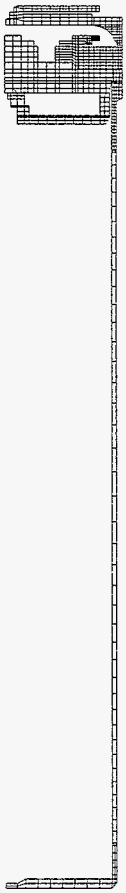

Figure 3: MCO Half-Symmetry Assembly with modified Lifting Cap

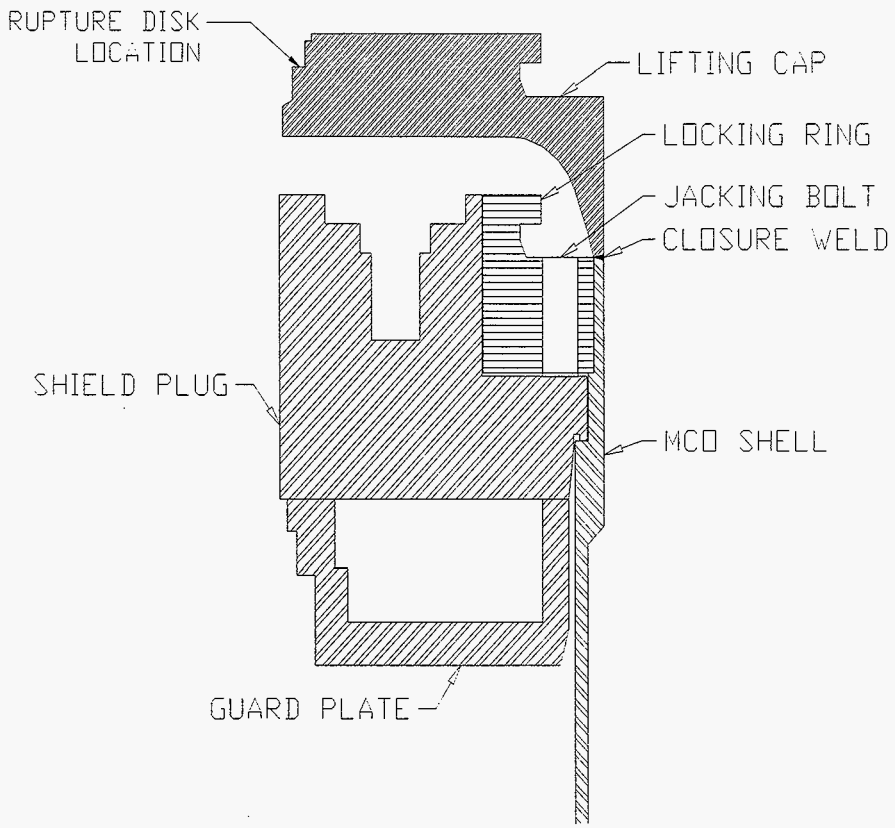

Figure 4: Detail of Upper MCO Assembly with Modified Lifting Cap

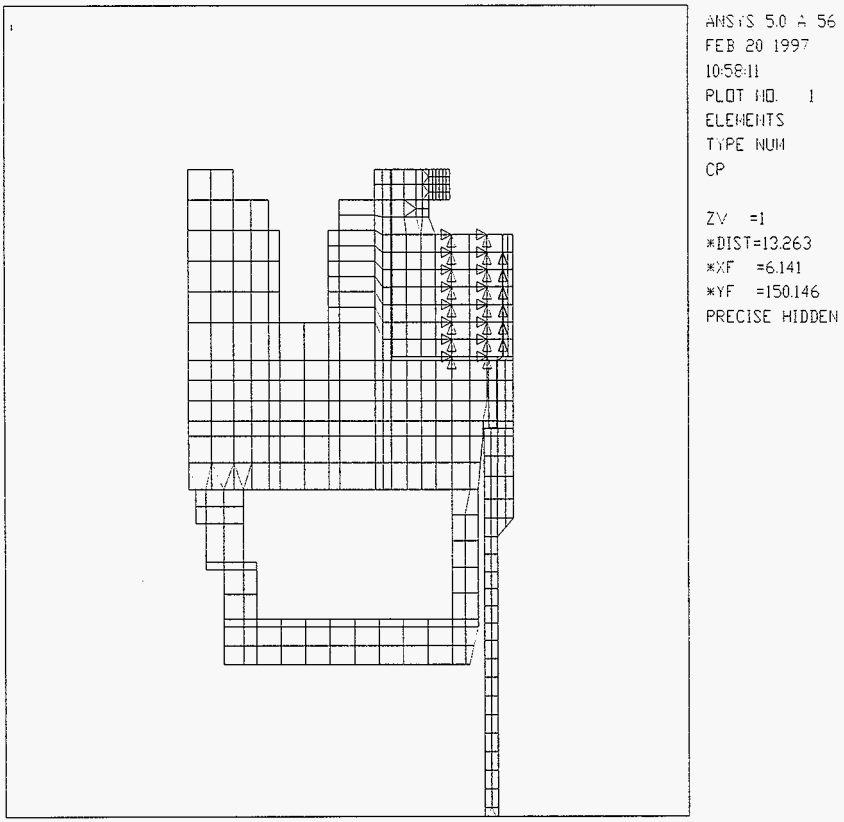

Figure 5: Model with Coupled Nodes at Jacking Bolt and Buttress Threads

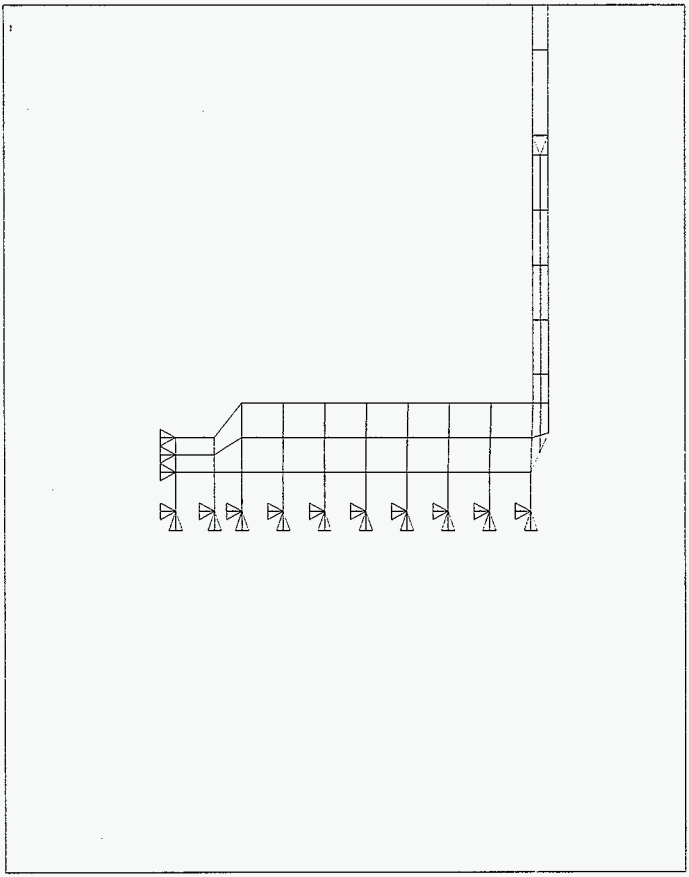

Figure 6: Bare Bottom End Drop Lower Boundary Conditions w/ Gap Elements

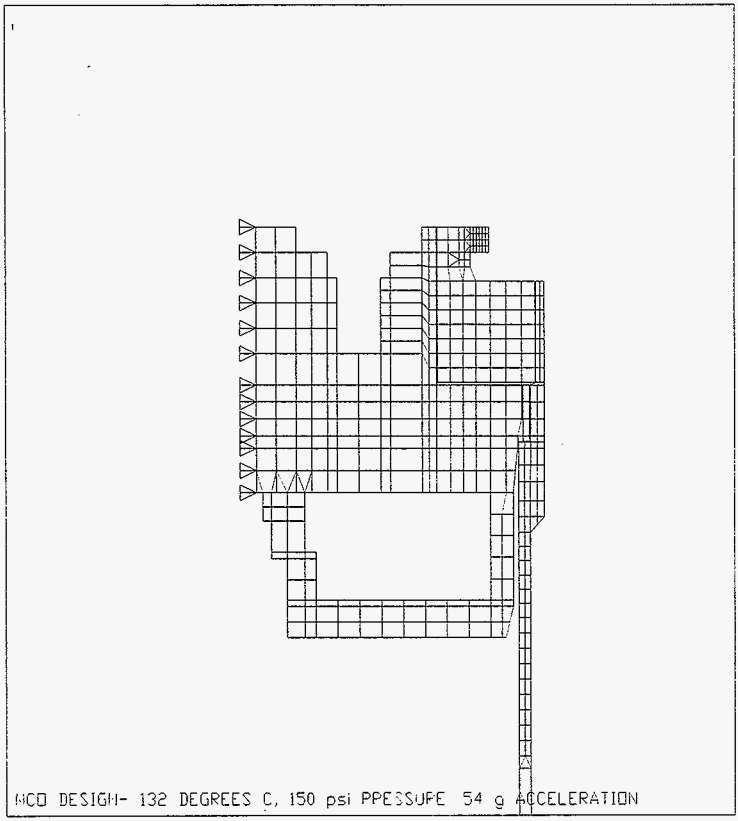

Figure 7: Bare Bottom End Drop Upper Boundary Conditions

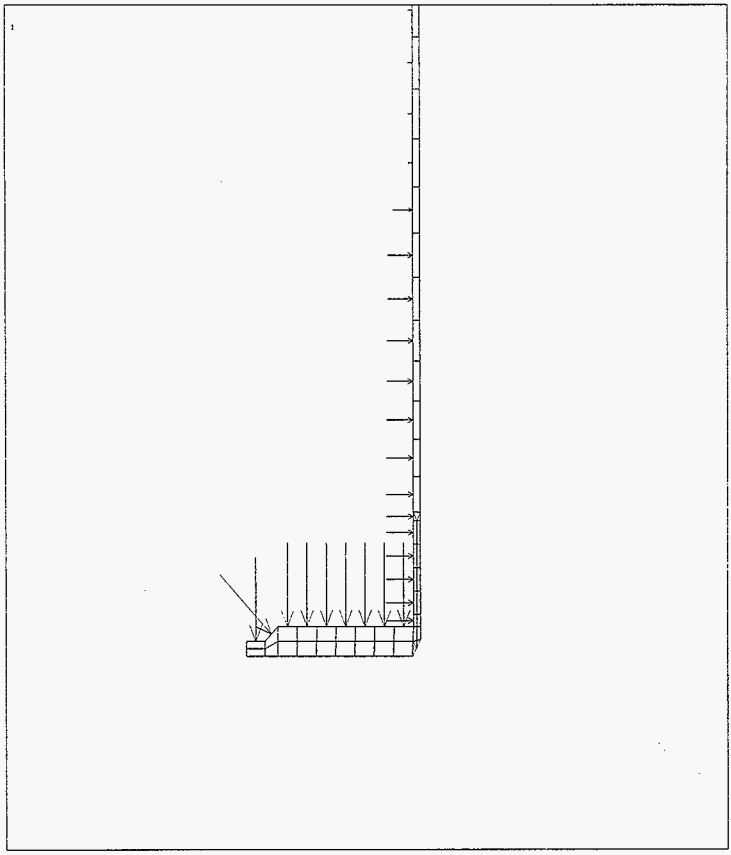

Figure 8: Bare Bottom End Drop Pressure Distribution (Internal & Hydrostatic)

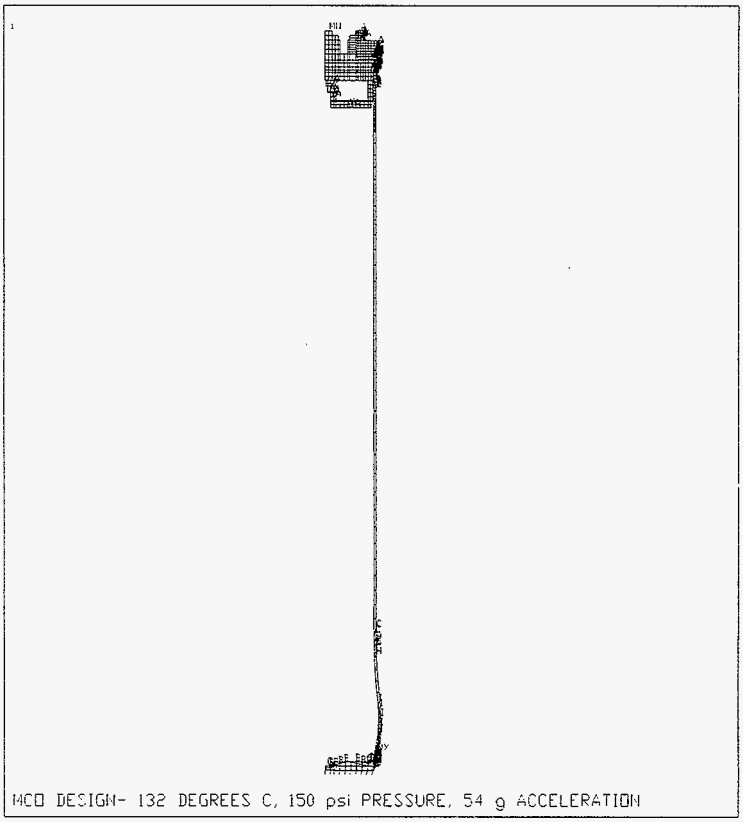

Figure 9: Bare Bottom End Drop Stress Intensities

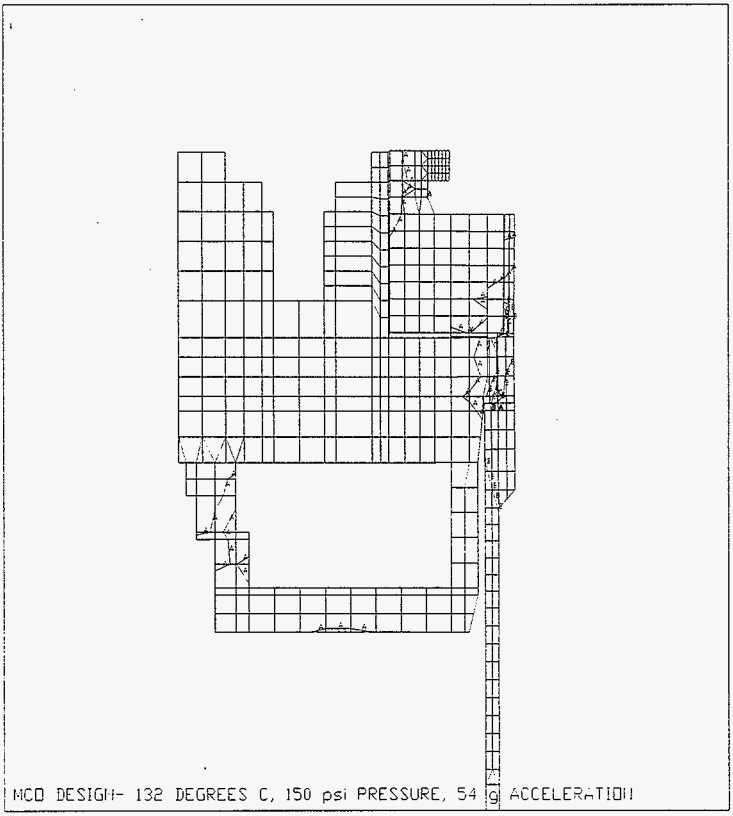

Figure 10: Bare Bottom End Drop Upper Assembly Stress Intensities

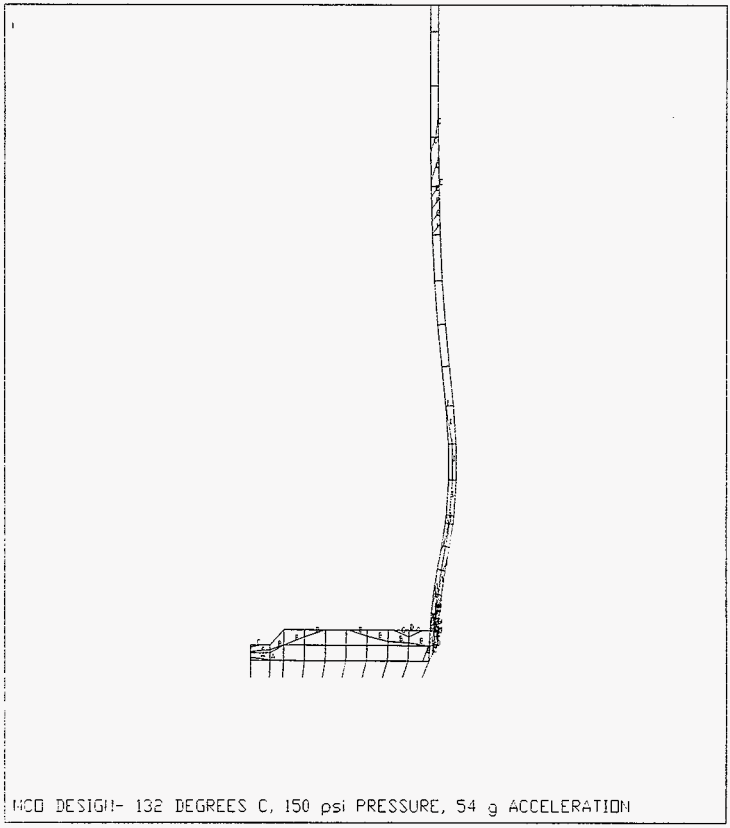

Figure 11: Bare Bottom End Drop Lower Assembly Stress Intensities

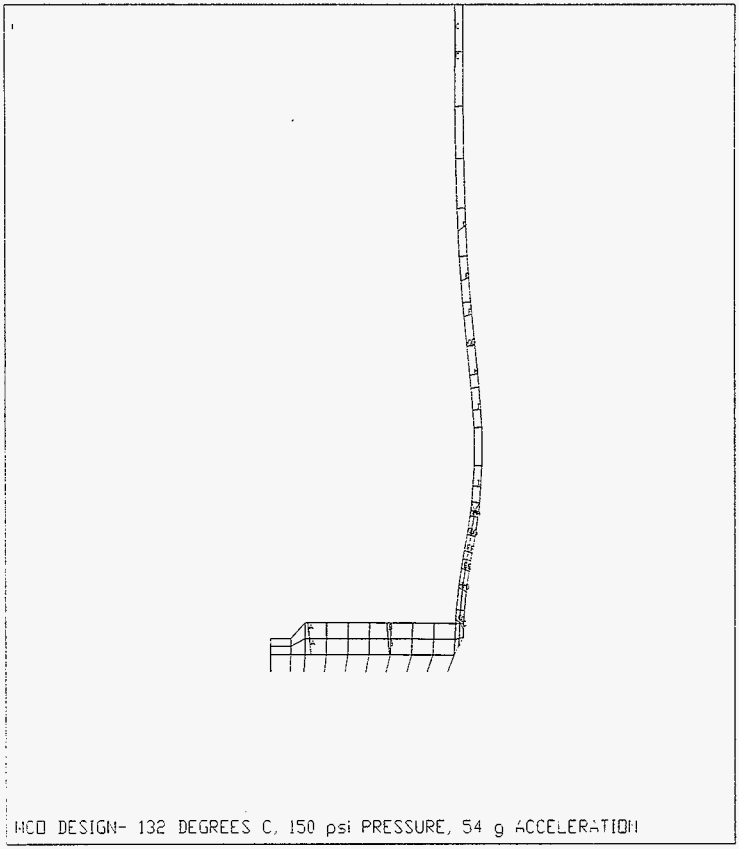

Figure 12: Bare Bottom End Drop Lower Assembly Radial Displacements

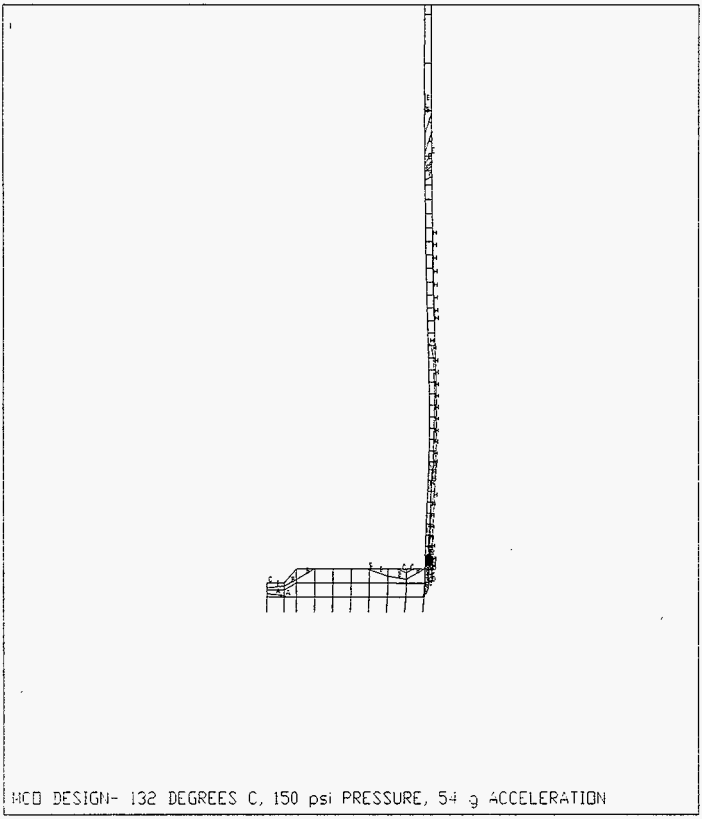

Figure 13: Bare Bottom End Drop w/ Fine Mesh, Lower Stress Intensities

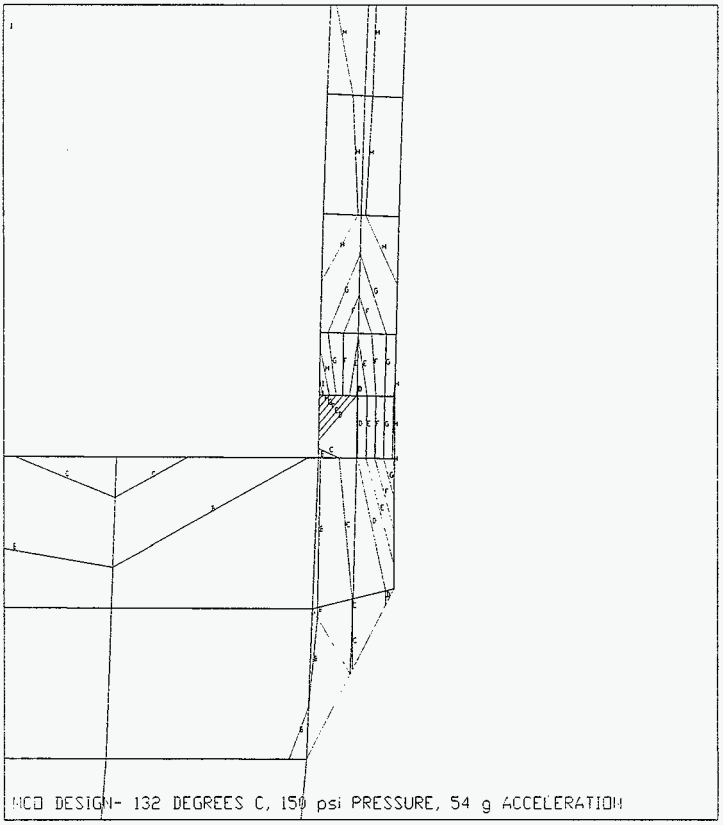

Figure 14: Bare Bottom End Drop w/ Fine Mesh, Close-Up

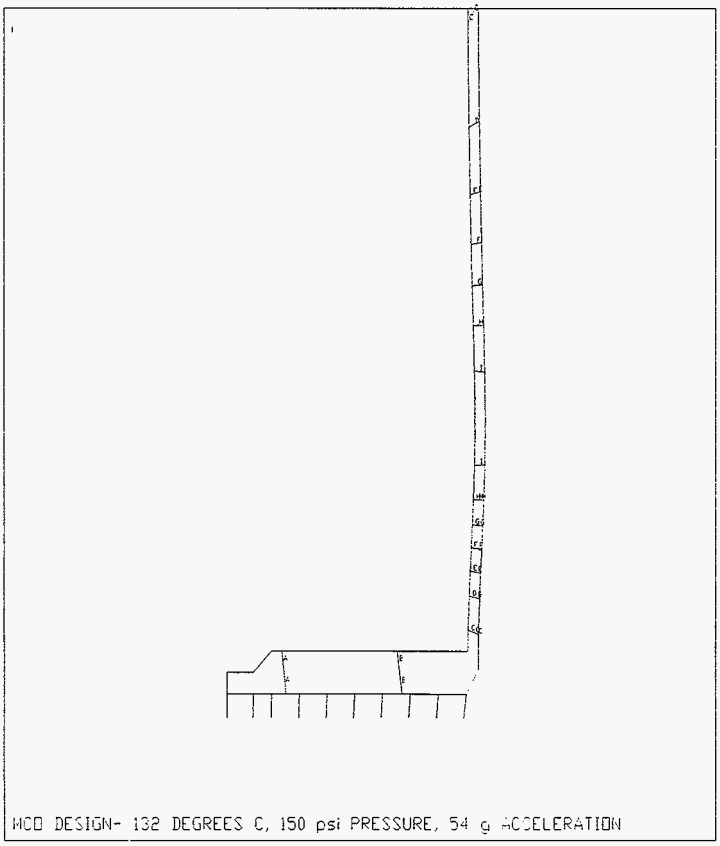

Figure 15: Bare Bottom End Drop w/ Fine Mesh, Radial Displacements

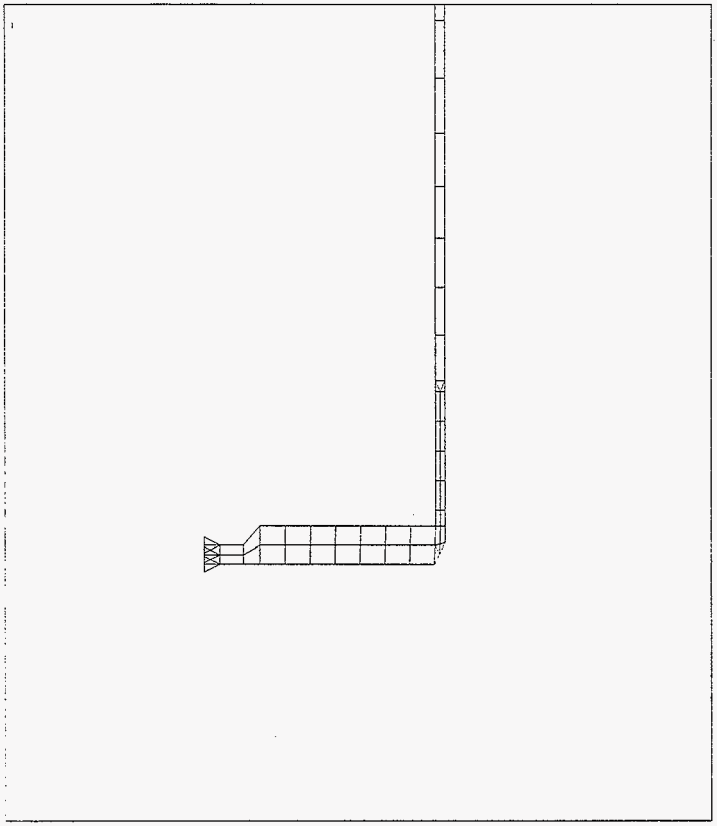

Figure 16: Top End Drop Lower MCO Boundary Conditions

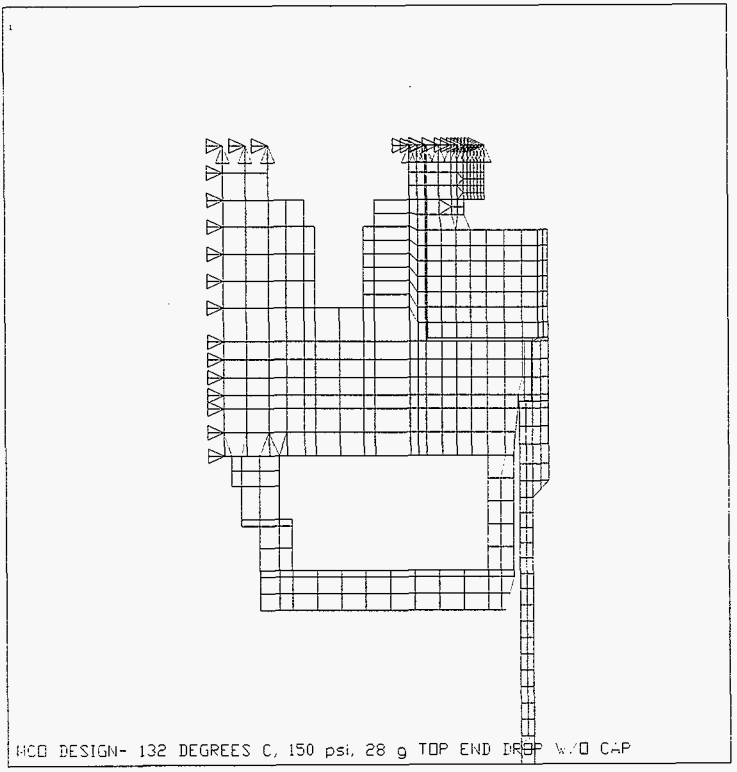

Figure 17: Top End Drop Upper MCO Boundary Conditions w/ Gap Elements

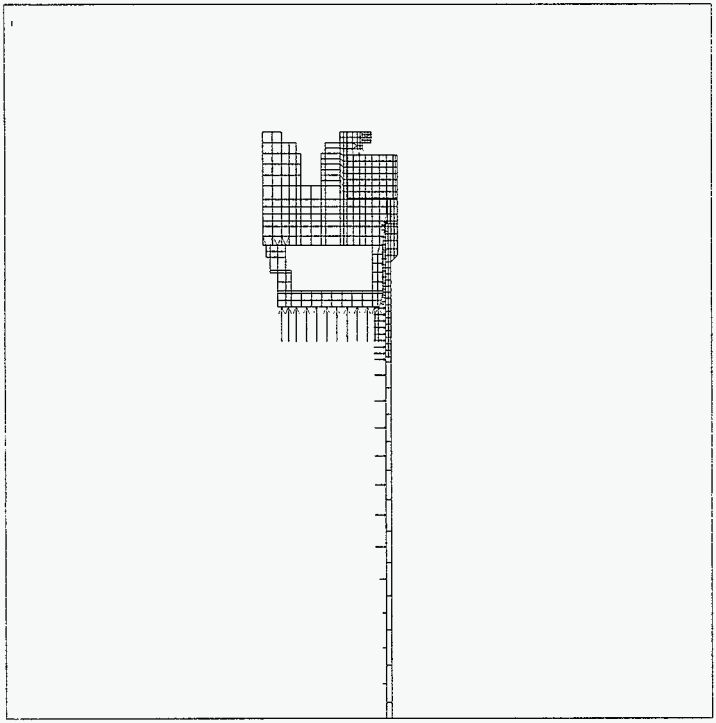

Figure 18: Top End Drop Pressure Distribution (Hydrostatic & Internal)

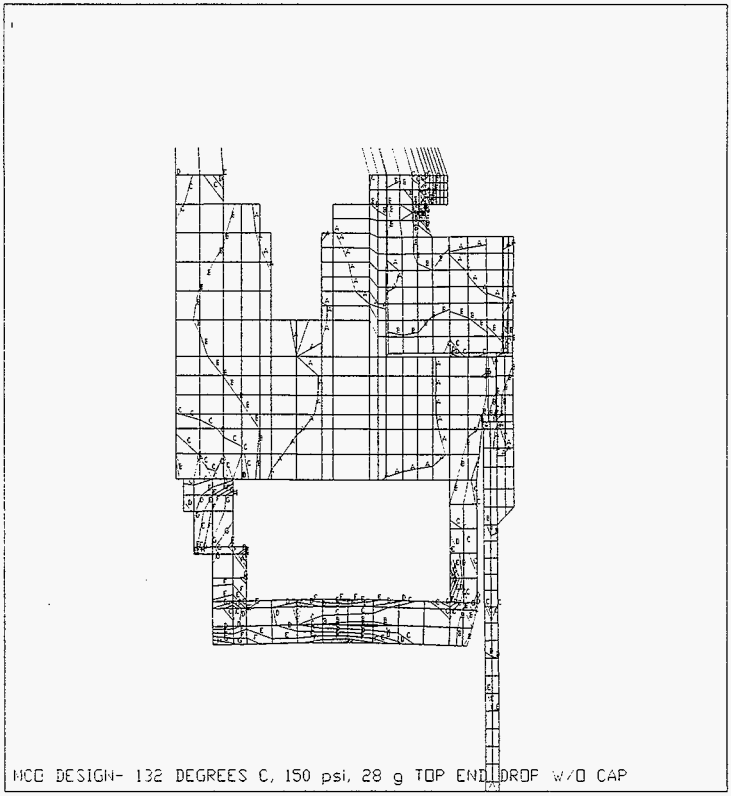

Figure 19: Top End Drop Upper MCO Assembly Stress Intensities

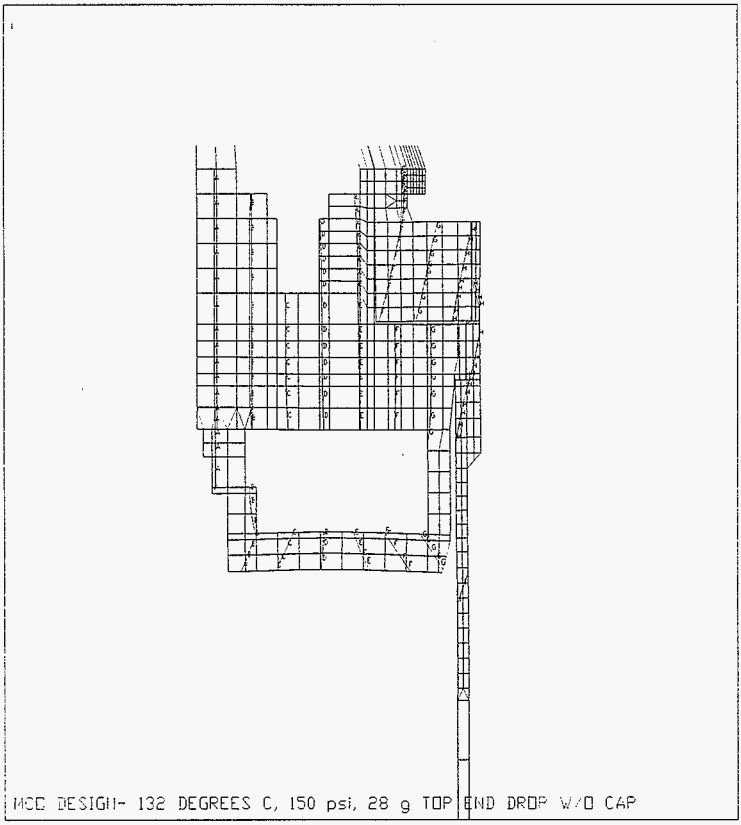

Figure 20: Top End Drop Upper MCO Assembly radial Displacements

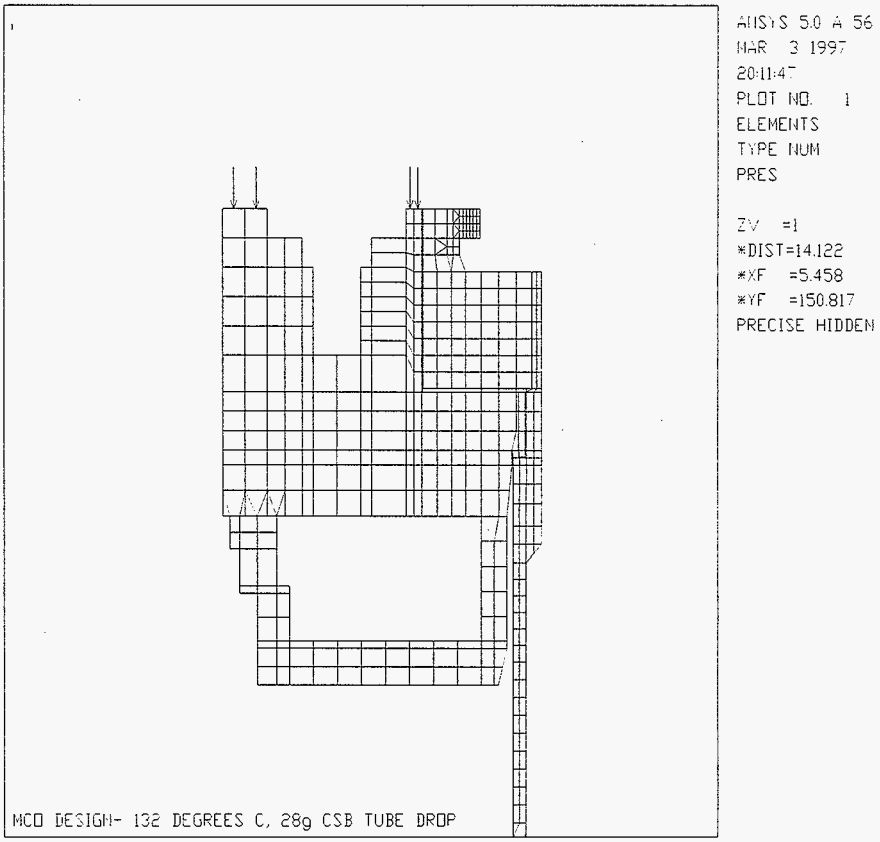

Figure 21: CSB Tube Drop (no cap) Pressure Distribution

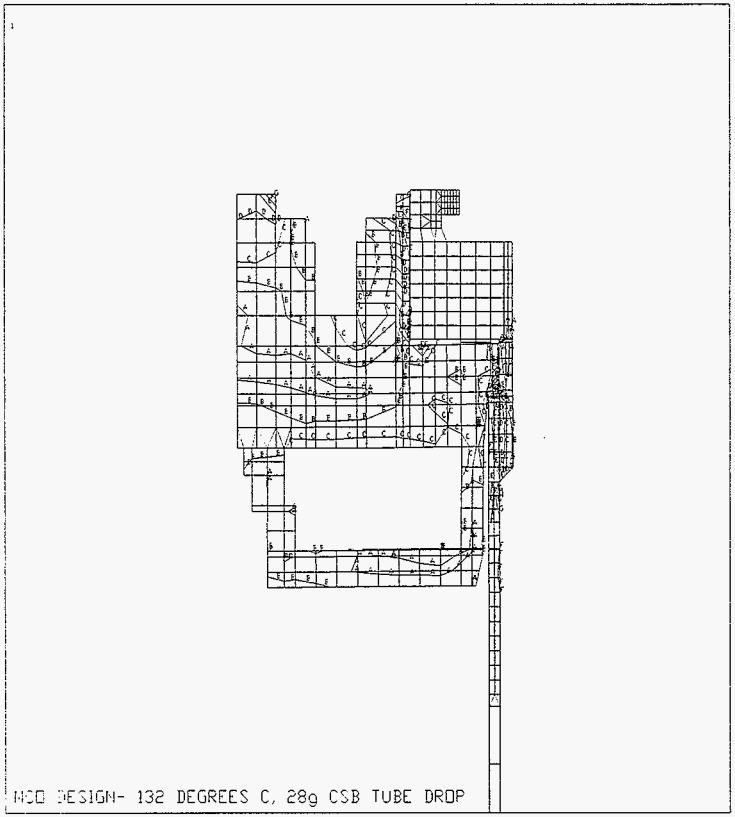

Figure 22: CSB Tube Drop (no cap) Upper MCO Assembly Stress Intensities

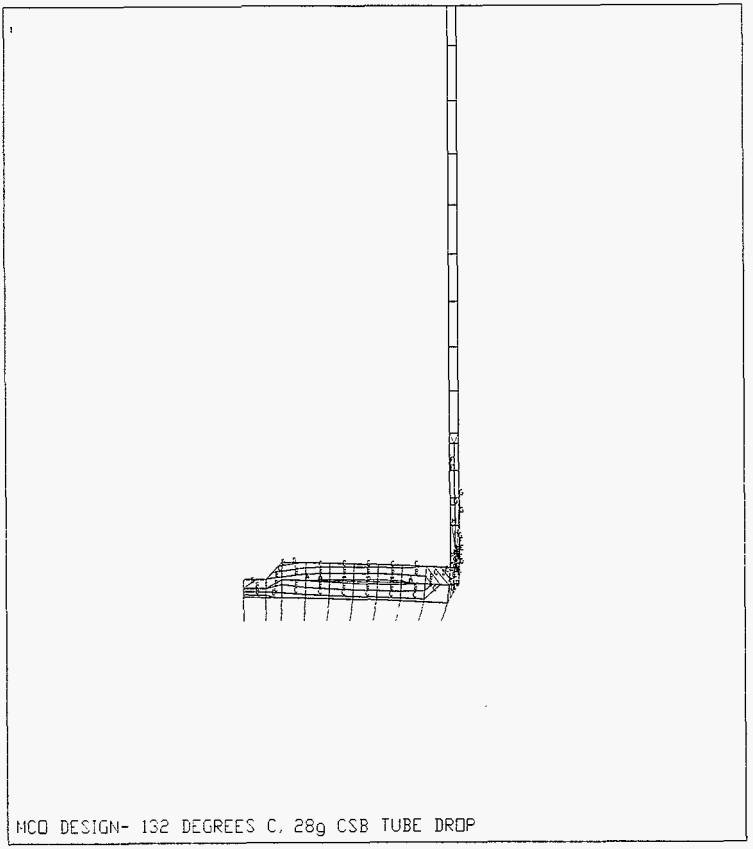

Figure 23: CSB Tube Drop (no cap) Lower MCO Assembly Stress Intensities

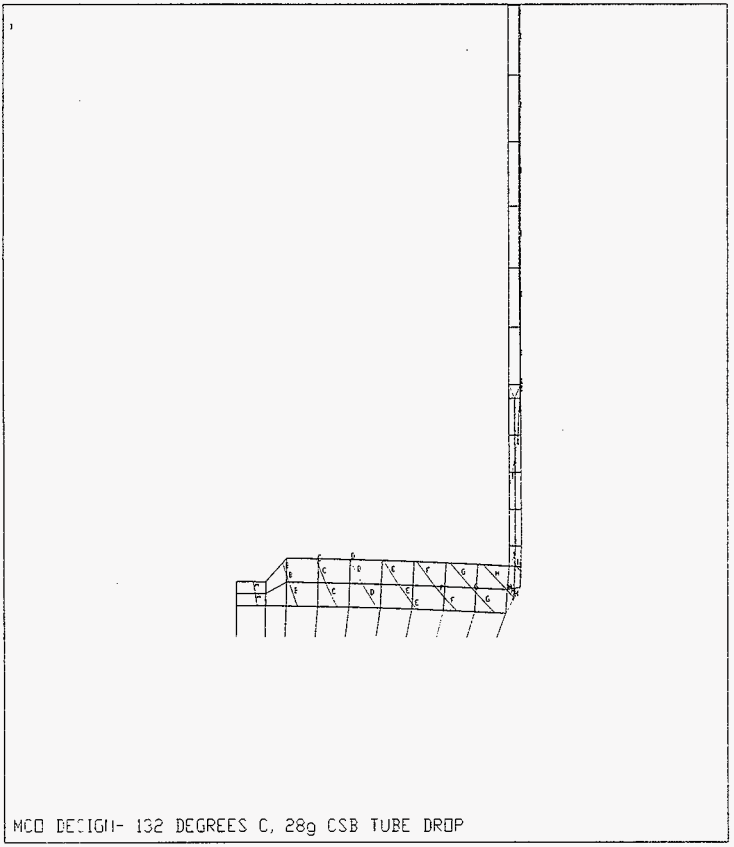

Figure 24: CSB Tube Drop (no cap) Lower MCO Assembly Radial Displacements

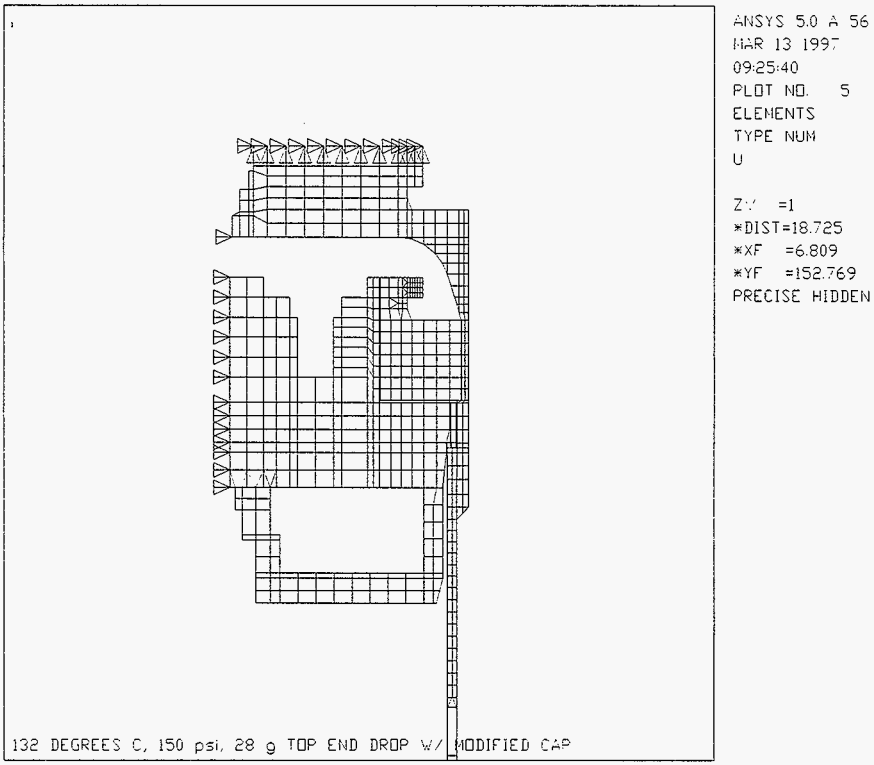

Figure 25: Top End Drop with Modified Cap and Upper Boundary Conditions

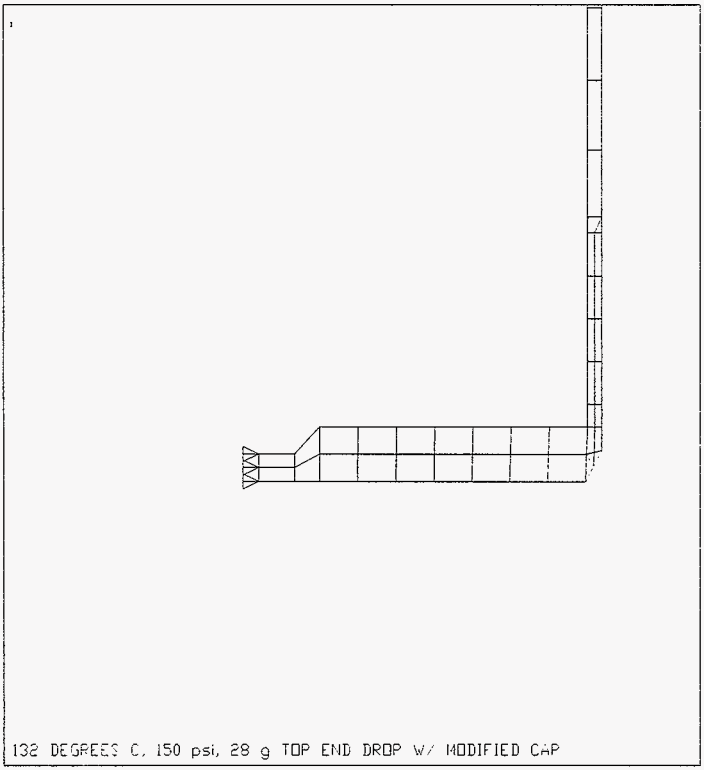

Figure 26: Top End Drop with Modified Cap and Lower Boundary Conditions

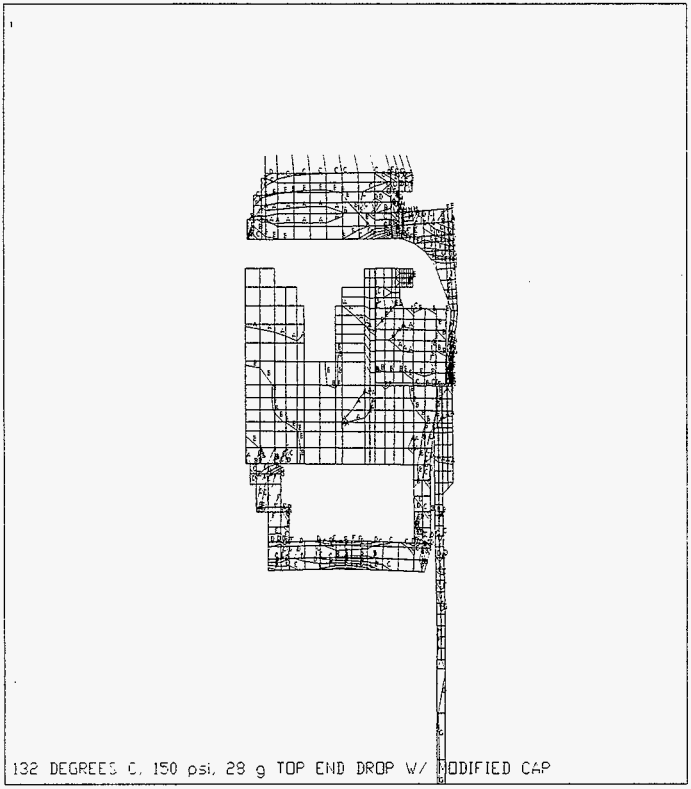

Figure 27: Top End Drop with Modified Cap and Upper Stress Intensities

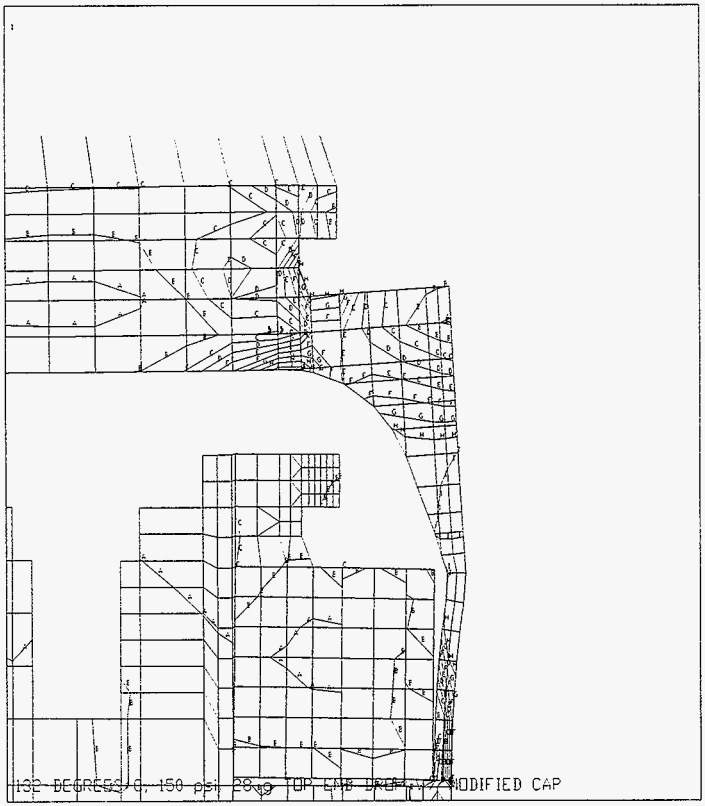

Figure 28: Top End Drop, Modified Cap @ Closure Weld, Stress Intensities

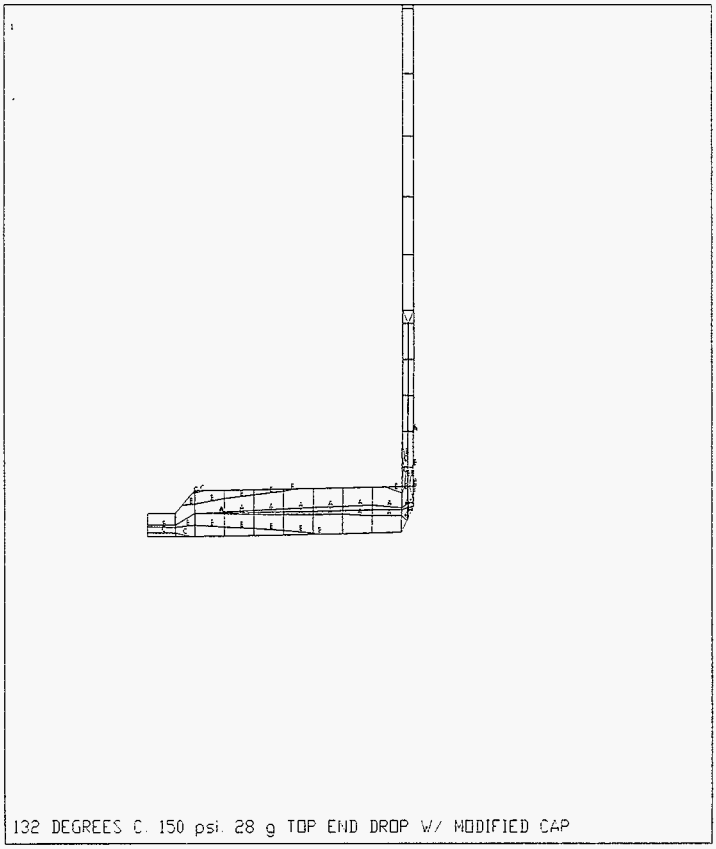

Figure 29: Top End Drop with Modified Cap Lower Stress Intensities

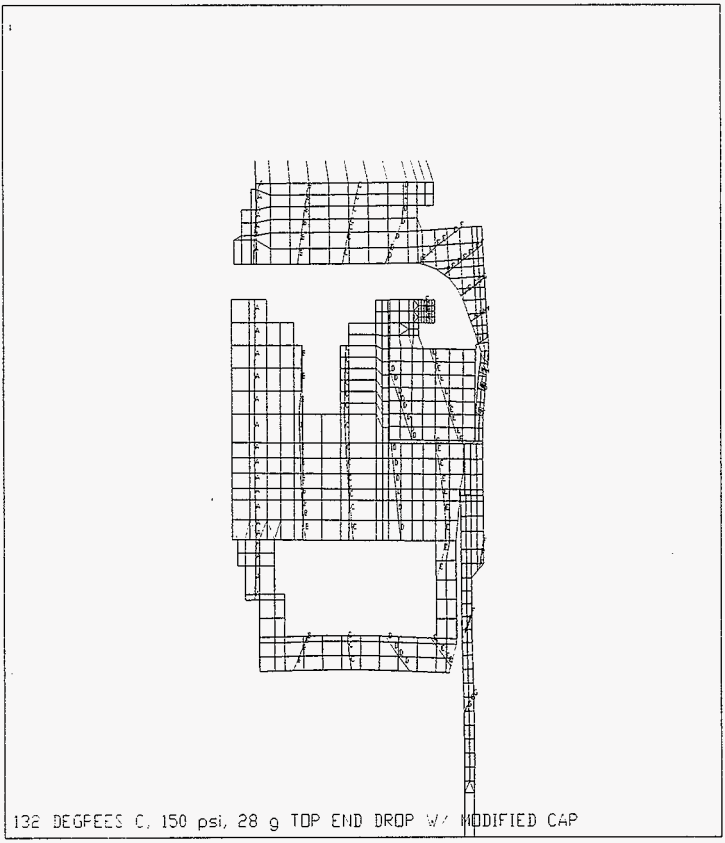

Figure 30: Top End Drop with Modified Cap and Radial Displacements

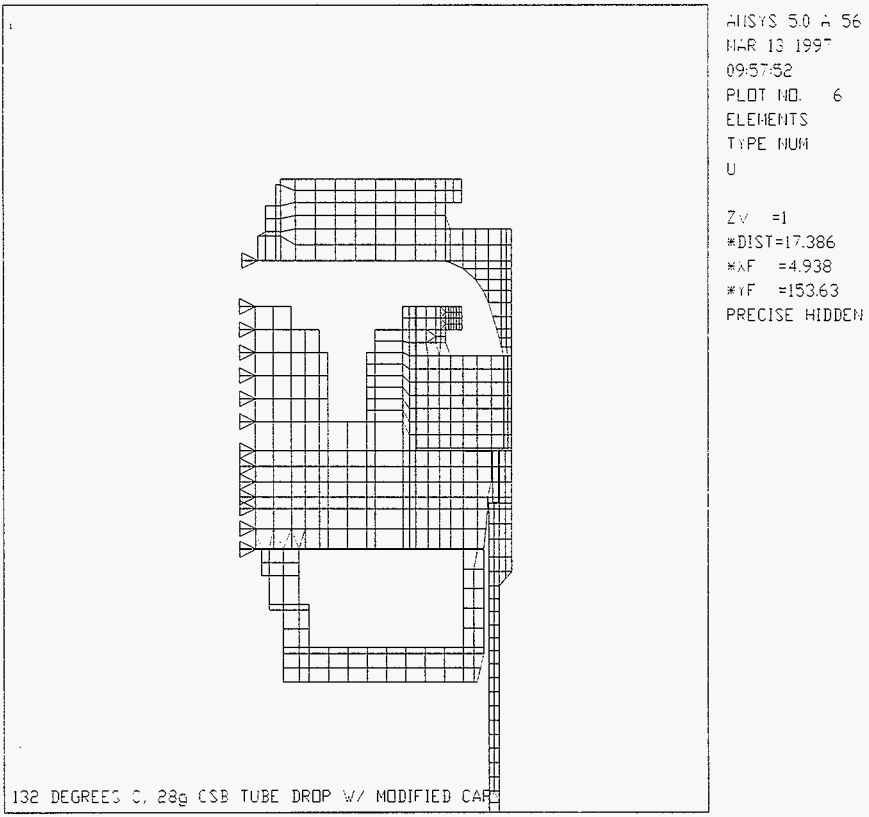

Figure 31: CSB Tube Drop with Modified Cap and Upper Boundary Conditions

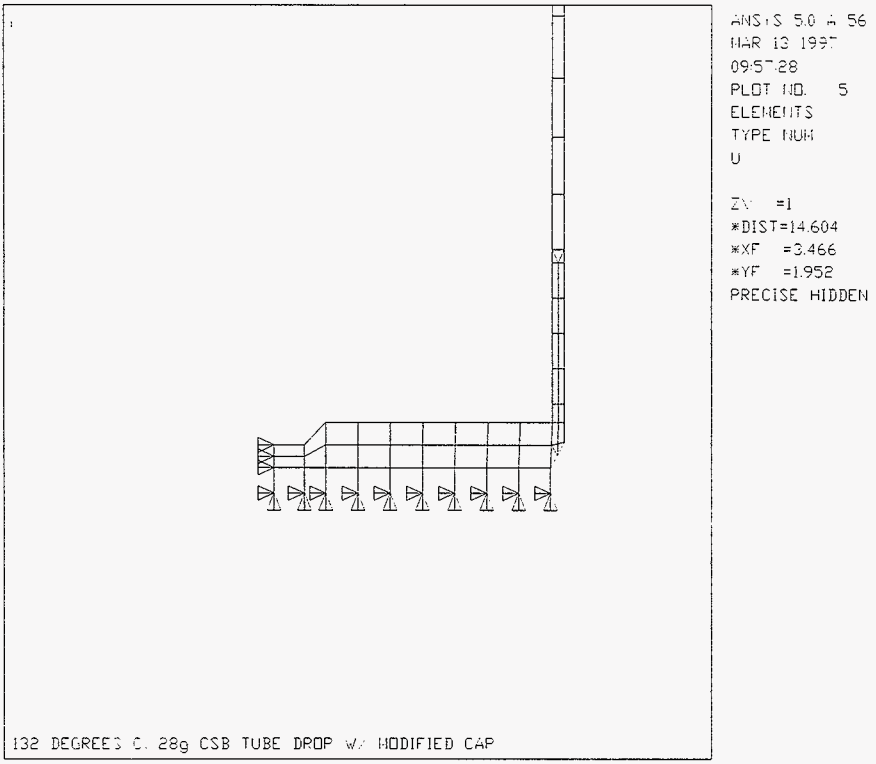

Figure 32: CSB Tube Drop with Modified Cap and Lower Boundary Conditions

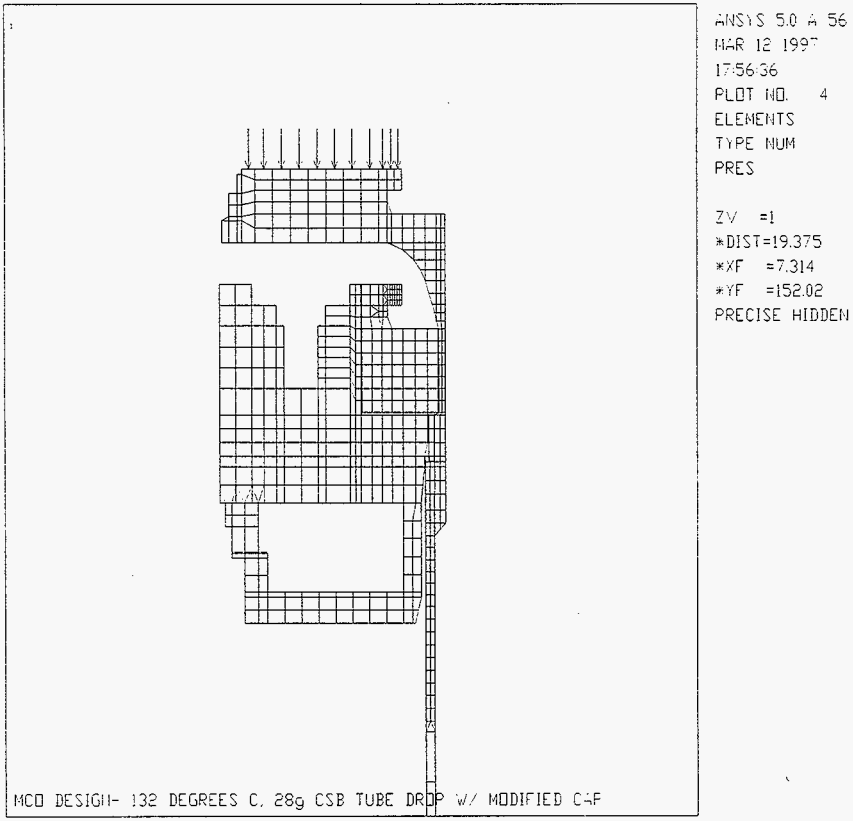

Figure 33: CSB Tube Drop with Modified Cap and Equivalent Pressure Distribution

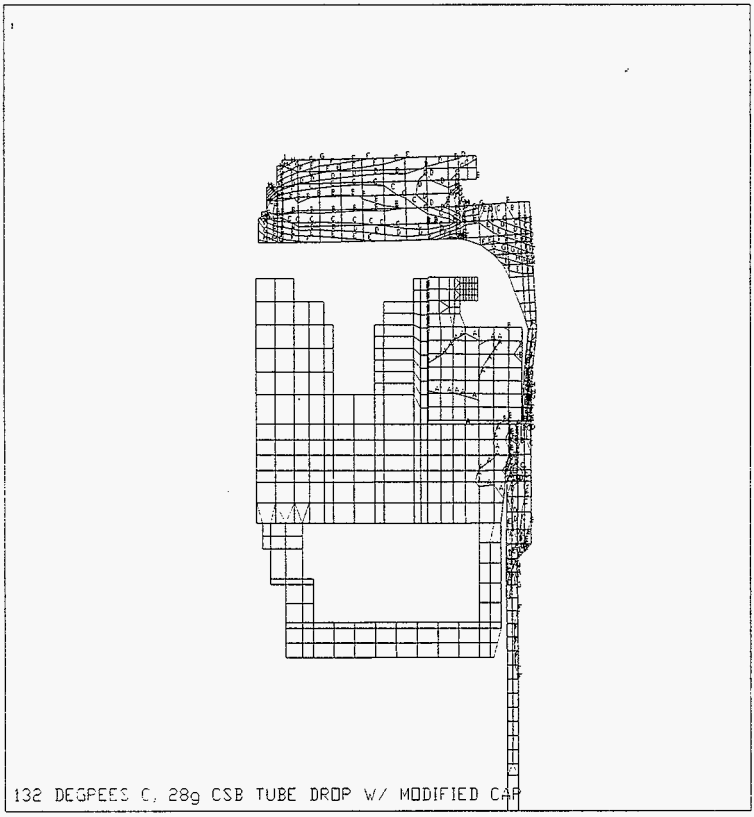

Figure 34: CSB Tube Drop with Modified Cap and Upper Stress Intensities

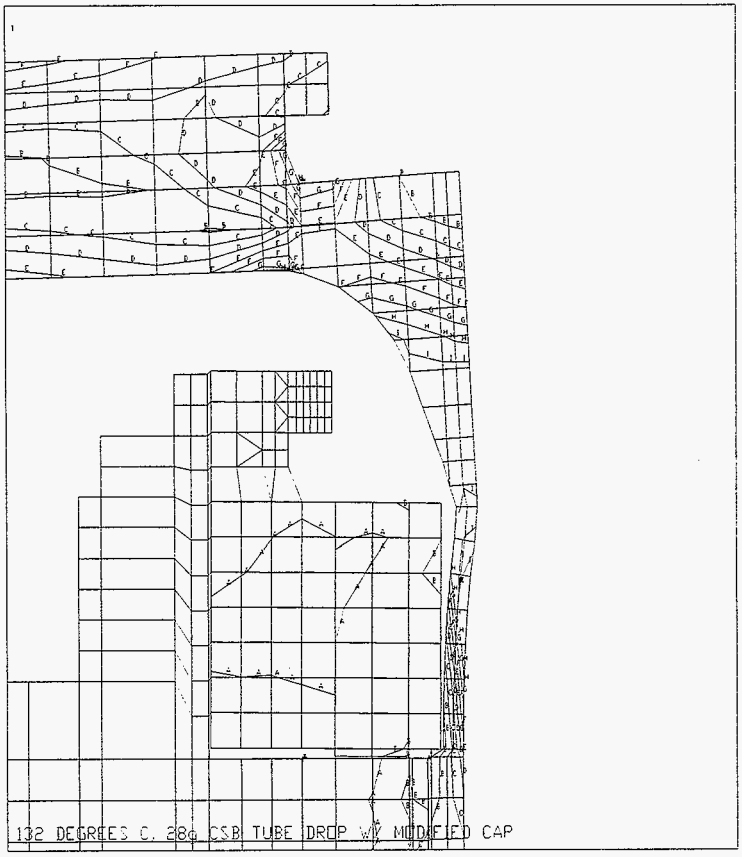

Figure 35: CSB Tube Drop, Modified Cap @ Closure Weld Stress Intensities

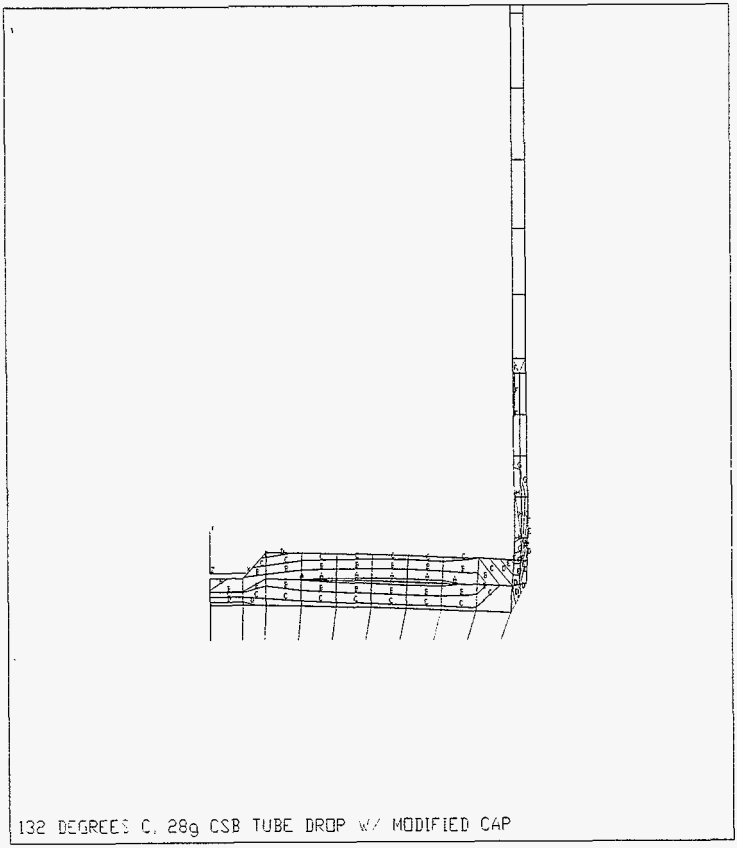

Figure 36: CSB Tube Drop with Modified Cap and Lower Stress Intensities

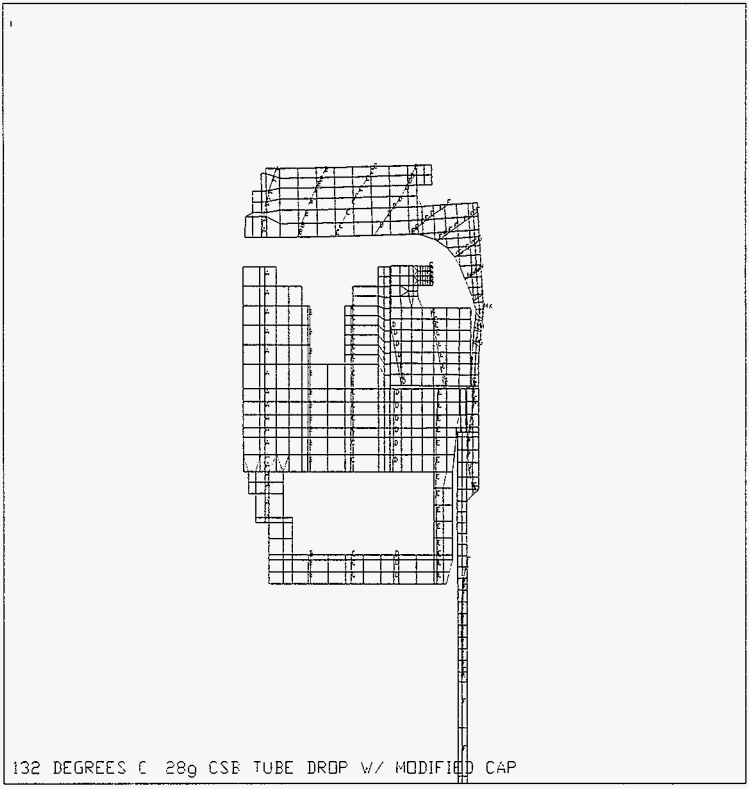

Figure 37: CSB Tube Drop with Modified Cap and Radial Displacements

Appendix A:

Computer Run Output Sheets

&

Input File Listings

COMPUTER RUN COVER SHEET

Project Number:	KH-8009-8
Computer Code:	ANSYS®-PC
Software Version:	5.0A
Computer System:	MS-DOS, Pentium® Processor
Computer Run File Number:	KH-8009-8-03
Unique Computer Run Filename:	CSBMC.inp
Run Description:	MCO CSB Tube Drop with Lifting Cap
Creation Date / Time:	30 March 1997 10:55:18 AM

Prepared By: Zachary G. Sargent — Date: 4/18/97

Checked By: Joe Nichols — Date: 4/17/97

LISTING OF CSBMC.INP FILE

```
/BATCH,LIST
/FILENAM,CSBMC
/PREP7
/TITLE,132 DEGREES C, 28g CSB TUBE DROP W/ MODIFIED CAP

TREF,70
TUNIF,270
ETAN=0.006              ! Tangent modulus


/COM **** ELEMENT TYPES ****
ET,1,42,,,1             ! Shell
ET,2,42,,,1             ! Shield Plug
ET,3,42,,,1             ! Lifting & Locking Ring
ET,4,12                 ! Gap Elements Between Shield Plug & Shell
KEYOPT,4,7,1
ET,5,42,,,1             ! Bolt

/COM **** REAL CONSTANTS FOR GAP ELEMENTS ****
R,4,-90,1.0E8,-0.06,3.0     ! Shell/Shield Plug, Initially Open .06"
R,5,0,1.0E8,2.95e-03        ! L. Ring/Shield Plug, Under Bolt, Preloaded
R,6,0,1.0E8,0,2.0           ! Sealing Surface, closed
R,7,0,1.0E8,0,1.0           ! Anchoring for drop, closed
R,8,0,2.42E7,,2.0           ! Maximum stiffness (unloading)

/COM ************* MATERIAL PROPERTIES **************
MP,DENS,1,490/1728          ! 304L SS
MP,NUXY,1,0.3

MP,DENS,5,490/1728          ! SA193 Grade B8M
MP,NUXY,5,0.3

TB,BKIN,1,6             ! Yield Stress & Tangent Moduli v. Temp.
TBTEMP,100
TBDATA,1,25000,ETAN*28.1E+06
TBTEMP,200
TBDATA,1,21300,ETAN*27.6E+06
TBTEMP,300
TBDATA,1,19100,ETAN*27.0E+06
TBTEMP,400
TBDATA,1,17500,ETAN*26.5E+06
TBTEMP,500
TBDATA,1,16300,ETAN*25.8E+06
TBTEMP,600
TBDATA,1,15500,ETAN*25.3E+06


/COM **** DEFINING TEMPERATURES FOR MPDATA ****
MPTEMP,1, 70,100,200,300,400,500
MPTEMP,7,600,650,700,750

/COM **** DEFINING ELASTIC MODULI FOR 304L & SA-193 ****
MPDATA,EX,1,1,28.3e+06,28.1e+06,27.6e+06,27.0e+06,26.5e+06,25.8e+06
```

```
MPDATA,EX,1,7,25.3e+06,25.1e+06,24.8e+06,24.5e+06
/COM                    ! SA-193
MPDATA,EX,5,1,28.3e+06,28.1e+06,27.6e+06,27.0e+06,26.5e+06,25.8e+06
MPDATA,EX,5,7,25.3e+06,25.1e+06,24.8e+06,24.5e+06

/COM **** MEAN COEFFICIENTS OF THERMAL EXPANSION (in./in./(F) ****
! SA240 Gr 304L
MPDATA,ALPX,1,1,0,8.55e-06,8.79e-06,9.00e-06,9.19e-06,9.37e-06
MPDATA,ALPX,1,7,9.53e-06,9.61e-06,9.69e-06,9.76e-06

! SA193 Gr B8M
MPDATA,ALPX,5,1,0,8.54e-06,8.76e-06,8.97e-06,9.21e-06,9.42e-06
MPDATA,ALPX,5,7,9.60e-06,9.69e-06,9.76e-06,9.81e-06

/COM ************ SHELL GEOMETRY ****************
IR=11.5                 ! Internal Shell Radius @ Bottom
OR=12.000               ! Shell Outside Radius @ Bottom
IR2 = 12.02             ! Inside Radius at Collar Sealing Surface
OR2 = 12.625            ! Outside Radius at Collar Sealing Surface
IR3 = 12.25             ! Inside Radius at Collar-Lifting Ring Weld

/COM **** BOTTOM COVER PLATE  [DWG SK-2-300378] ****
N,1,,-1.32              ! Row 1
N,2,1.25,-1.32
N,3,2.13,-1.32
N,10,11.423,-1.32
FILL

N,41,0.00,-0.44         ! Row 3
N,42,1.25,-0.44
N,43,2.13,0.44
N,50,IR,0.44
FILL,43,50
N,52,OR,0.44
FILL,50,52

FILL,1,41,1,21,1,10     ! Middle Row
FILL,10,50,1,30
N,32,12,-0.32
FILL,30,32
FILL,10,32,1,11
N,53,IR,1.17
N,55,OR,1.17            ! Shell Stub/Weld
FILL,53,55

/COM **** SHELL [DWGS SK-2-300379 & SK-2-300461] ****
N,65,IR,6.68
N,67,OR,6.68
FILL
FILL,53,65,3,,3,3,1

/COM **** SINGLE ROW SHELL ****
N,100,IR,7.18           ! Inside
N,140,IR,71.68
N,180,IR,136.68
```

```
N,101,OR,7.18              ! Outside
N,141,OR,71.68
N,181,OR,136.68
FILL,100,140,20,,2,2,1,2.0
FILL,140,180,19,,2,2,1,.5

/COM **** DOUBLE ROW SHELL ****
N,190,IR,137.18            ! Transition to Double Row
N,192,OR,137.18
FILL

/COM **** BASE OF CASK THROAT--ELEVATION: 138 INCHES ****
N,217,IR,142.68            ! Transition to Double Row
N,219,OR,142.68
FILL
FILL,190,217,8,,3,3,1      ! Vertical Fill

/COM **** BOTTOM OF COLLAR TRANSITION ****
N,235,IR,146.06            ! Start of Transition to Large O.D &
N,237,OR,146.06            ! Assumed Location of Shield Plug Taper
FILL
N,238,IR,146.68
N,240,OR,146.68
FILL                ! Horizontal Fill
FILL,217,235,5,,3,3,1      ! Vertical Fill

/COM **** TOP OF COLLAR TRANSITION ****
N,241,IR,147.31            ! End of Transition to Large O.D &
N,243,OR,147.31            ! Assumed Location of Shield Plug Taper
FILL                ! Horizontal Fill
NGEN,2,3,241,243,1,,0.75

/COM **** COLLAR SEALING SURFACE ****
N,247,IR,149.63            ! Inside Radius of Sealing Surface
N,249,IR2,149.63           ! Outside Radius at Sealing Surface
FILL                ! Horizontal Fill

/COM **** THICK WALL AT COLLAR TRANSITION ****
NGEN,2,10,240,249,3        ! Nodes 250-259 Coincident w/240-249 (by 3)
N,255,OR2,147.31           ! Outside Surface
N,261,OR2,149.63           ! Outside Surface
N,258,OR2,148.06
N,980,IR,149.38
N,981,11.755,149.38
N,982,IR2,149.38
N,983,12.317,149.38
N,984,OR2,149.38
N,990,OR2,146.68
FILL,240,990,1,251
NGEN,2,5,980,984,1,,-0.66
FILL,246,258,1,257
FILL,253,255,1,,1,3,3
FILL,237,990,1,991

/COM **** COLLAR AT BOTTOM EDGE OF PLUG (.155" above Sealing Surface) ****
NGEN,2,3,259,,,,0.245      ! Nodes 262
```

```
/COM **** COLLAR AT TOP EDGE OF PLUG (2" above bottom Edge) ****
NGEN,2,9,262,,,,2.00          ! Nodes 271
FILL,262,271,2

/COM **** COLLAR AT BASE OF THREADS ****
N,274,IR3,152.00
N,1000,IR2,152.00

/COM **** TOP TO COLLAR (WELD CLOSURE) ****
N,295,IR3,156.00
FILL,274,295
NGEN,3,1,259,295,3,(OR2-IR2)/2
NGEN,3,1,274,295,3,(OR2-IR3)/2

/COM ********** LOCKING & LIFTING RING GEOMETRY **********
RING1=7.94
RING2=9.375
RING3=9.625
RING4=10.19
RING5=12.23
LOCAL,11,0,,152.00            ! Local System z=0 at Base of Ring
CSYS,11

/COM **** TOP EDGE ****
N,401,RING1,6.13
CSYS,O
N,404,9.375,158.13
FILL,401,404,,,1
N,406,RING4,158.13
FILL,404,406,,,1              ! Top Edge

/COM **** LIFTING SURFACE ****
CSYS,11
N,421,RING1,5.13
N,424,RING2,5.13
FILL,421,424
N,426,RING4,5.13
FILL,424,426
FILL,401,421,1,,10,6,1
N,431,RING1,6.13-1.56
N,434,RING2,6.13-1.56
FILL

/COM **** BOLTING SURFACE ****
N,441,RING1,4
N,444,RING3,4
FILL
N,445,10.9375-.6875,4         ! Inside Edge of Bolt Hole
N,447,10.9375+.6875,4         ! Outside Edge of Bolt Hole
FILL
N,910,10.9375-.6875,4
N,911,10.9375+.6875,4
N,448,RING5,4                 ! O.D of Ring
CSYS,0                        ! Bolt Extension
N,924,10.25,152.00            ! Double Nodes @ Bolt for Gap elements
```

```
N,925,11.625,152.00
FILL,910,924,6,,2
FILL,911,925,6,,2
N,525,10.25,151.874          ! Bottom of Bolt Extension
N,527,11.625,151.874
FILL

/COM **** BOTTOM OF LIFTING/LOCKING RING ****
CSYS,11
NGEN,2,70,441,448,1,,-4      ! Bottom Surface of Lifting/Locking Ring
FILL,441,511,6,,10,8,1       ! Fill in Lifting/Locking Ring

/COM ************ SHIELD PLUG (offset y by 158.25) **************
LOCAL,20,0,,158.13
TYPE,2
PLUGR1=11.975
PLUGR2=11.45
PLUGR3=11.25
PLUGR4=7.89

/COM **** NODES AT PLUG AXIS (r=0) ****
N,601
N,602,0,-1
N,603,0,-1.994
N,606,0,-4.994
FILL,603,606,2,604
N,607,0,-6.25
N,610,0,-8.25
FILL,607,610,2,608
N,611,0,-8.75
N,613,0,-10.5
FILL,611,613

/COM **** NODAL GENERATION ****
NGEN,2,20,601,613,1,0.8825
NGEN,2,20,621,633,1,0.8825          ! Id Large Opening
NGEN,2,20,642,653,1,0.6875
NGEN,2,20,662,673,1,0.6875          ! Id Medium Opening
NGEN,2,20,683,693,1,0.4235          ! Id Small Opening
NGEN,2,10,706,713,1,0.9515          ! Center of Opening

N,730,5.4665,-1.994                 ! Od Small Opening
N,736,5.4665,-4.994
FILL,730,736,5,731
N,737,5.4665,-6.25
N,740,5.4665,-8.25
FILL,737,740,2,738
N,741,5.4665,-8.75
N,743,5.4665,-10.5
FILL,741,743
N,748,5.89,-1.0
NGEN,2,20,730,743,1,0.4235
FILL,748,750
N,766,7.265,0
NGEN,2,20,748,763,1,1.375
FILL,766,768
```

```
NGEN,3,20,766,768,1,0.3125
N,789,7.5775,-1.56
N,796,7.5775,-5.56
FILL,789,796,6
NGEN,2,20,789,796,1,0.3125
NGEN,3,20,777,783,1,0.3125

/COM **** UNDER LOCKING RING ****
N,824,8.5017,-6.25
N,827,8.5017,-8.25
FILL
N,828,8.5017,-8.75
N,830,8.5017,-10.5
FILL
NGEN,3,7,824,830,1,0.5616
NGEN,2,7,838,844,1,0.625
NGEN,2,7,845,851,1,0.6875     ! Under Bolt
N,859,11.625,-6.25
N,860,11.625,-6.917
N,861,11.625,-7.584
N,862,PLUGR2,-8.25
N,863,PLUGR2,-8.75
N,865,PLUGR3,-10.5
FILL,863,865,1
N,866,PLUGR1-0.288,-6.25
N,869,PLUGR1-0.288,-8.25
FILL,866,869,2
N,870,PLUGR1-0.288,-8.476
NGEN,2,5,866,870,1,0.288

/COM **** REFINING LIFTING EAR ****
CSYS,0
N,877,9.53,158.13
N,889,9.53,157.63
N,901,9.53,157.13
FILL,403,404,1,876
FILL,413,414,1,888
FILL,423,424,1,900
FILL,877,405,1,878
FILL,405,406,2,879,1
FILL,889,415,1,890
FILL,415,416,2,891,1
FILL,404,414,1,881
FILL,877,889,1,882
FILL,878,890,1,883
FILL,405,415,1,884
FILL,879,891,1,885
FILL,880,892,1,886
FILL,406,416,1,887
FILL,889,901,1,894
FILL,414,424,1,893
FILL,901,425,1,902
FILL,890,902,1,895
FILL,415,425,1,896
FILL,425,426,2,903,1
FILL,891,903,1,897
```

```
FILL,892,904,1,898
FILL,416,426,1,899
FILL,424,434,1,907
FILL,433,434,1,908
FILL,423,433,1,905
FILL,905,907

/COM **** LIFTING CAP ****
N,1001,0.125,161.167
N,1002,0.125,160.12
NGEN,2,5,1001,1002,,0.392
N,1003,0.517,162.471
N,1004,0.517,161.9185
N,1005,0.517,161.366
N,1008,1.00,163.366
NGEN,2,6,1003,1007,,0.483
N,1014,1.25,163.616
NGEN,2,7,1008,1013,,0.25
N,1021,1.9768,163.616
N,1023,1.9768,162.616
FILL
N,1024,1.9768,162.056
N,1025,1.9768,161.49
N,1027,1.9768,160.12
FILL,1025,1027
NGEN,7,10,1021,1027,,0.9884
NGEN,2,10,1081,1087,,0.9888
N,1101,RING2,163.616
N,1103,RING2,162.616
FILL
N,1104,RING2,162.056
N,1105,RING2,161.49
N,1107,RING2,160.12
FILL
N,1108,RING2,160.088
N,1112,RING4,163.616
N,1114,RING4,162.616
FILL
FILL,1101,1112,1,1109
FILL,1102,1113,1,1110
FILL,1103,1114,1,1111
N,1120,RING3,161.49
N,1122,RING3,160.12
FILL
NGEN,2,3,1120,1122,,0.629
NGEN,2,3,1123,1125,,0.614
NGEN,2,3,1126,1128,,0.636
NGEN,2,3,1129,1131,,0.621
N,1138,OR2,161.49
N,1140,OR2,160.12
FILL
FILL,1132,1138,1,1135
FILL,1133,1139,1,1136
FILL,1134,1140,1,1137
N,1141,12.125,159.78
N,1143,OR2,159.78
```

```
FILL
NGEN,3,3,1141,1143,,,-0.47
NGEN,2,3,1147,1150,,,-0.53
NGEN,2,3,1150,1152,,,-0.60
NGEN,2,3,1153,1155,,,-0.54
NGEN,2,3,1156,1158,,,-0.38
NGEN,2,3,1159,1161,,,-0.41
N,1168,RING3,160.032
N,1169,10.254,159.78
N,1170,10.868,159.78
N,1171,11.504,159.78
N,1172,10.868,159.31
N,1173,11.504,159.31
N,1174,11.24,158.84
N,1175,11.504,158.84
N,1176,11.504,158.31
N,1177,11.71,157.71
N,1178,11.896,157.17
N,1179,12.027,156.79
/COM **** END LIFTING CAP ****

/COM **** FILTER GUARD PLATE ****
PLATE1=0.273
PLATE2=0.6575
PLATE3=1.357
PLATE4=10.25
PLATE5=11.25

N,1200,PLATE4,146.78
N,1202,PLATE5,146.78
FILL
NGEN,5,3,1200,1202,,,-0.85
NGEN,2,3,1212,1214,,,-0.25
N,1221,PLATE4,141.88
N,1222,10.75,141.88
N,1223,10.915,141.88
FILL,1215,1221,1,1218
FILL,1223,1217,1,1220
FILL,1216,1222,1,1219
N,1237,6.4375,143.38
FILL,1212,1237,3,1225,4
N,1249,3.578,143.38
FILL,1237,1249,2,1241,4
NGEN,2,1,1225,1249,4,,-0.25
NGEN,2,2,1226,1250,4,,-1.25
FILL,1226,1228,1,1227,,7,4
N,1253,2.625,145.255
N,1254,2.625,145.005
N,1256,2.625,143.38
FILL,1254,1256
N,1257,2.625,143.13
N,1259,2.625,141.88
FILL,1257,1259
NGEN,2,10,1253,1259,1,-0.5
NGEN,2,10,1263,1269,1,-0.768
N,1283,0.6575,145.255
```

```
N,1284,0.6575,145.005
N,1260,2.125,147.63
N,1270,1.357,147.63
N,1280,0.6575,147.63
N,1290,0.273,147.63
NGEN,3,1,1260,1290,10,,-0.5625

/COM **** GAP ELEMENT NODE @ BOTTOM OF SHELL ****
NGEN,2,2000,1,10,1,,-1.00

/COM **** COUPLING NODES ****
/COM **** BETWEEN LIFTING/LOCKING RING & SHELL ****
CP,1,UY,508,277              ! Start Threads
CP,2,UY,498,280
CP,3,UY,488,283
CP,4,UY,478,286
CP,5,UY,468,289
CP,6,UY,458,292

/COM **** BETWEEN BOLT & LOCKING RING ****
CP,7,UY,445,910
CP,8,UX,445,910
CP,9,UY,447,911
CP,10,UX,447,911
*DO,I,1,7
CP,10+I,UY,445+10*I,910+2*I
*ENDDO
*DO,I,1,7
CP,17+I,UY,447+10*I,911+2*I
*ENDDO
*DO,I,1,7
CP,24+I,UX,445+10*I,910+2*I
*ENDDO
*DO,I,1,7
CP,31+I,UX,447+10*I,911+2*I
*ENDDO
NALL
EALL

/COM **** ELEMENT GENERATION FOR SHELL ****
TYPE,1
MAT,1

/COM **** BOTTOM OF SHELL ****
E,1,2,22,21
E,2,3,23,22
EGEN,8,1,-1
E,10,11,30
E,21,22,42,41
E,22,23,43,42
EGEN,10,1,-1
E,11,31,30
E,11,32,31

/COM **** SHELL ****
E,50,51,54,53
```

```
EGEN,2,1,-1
EGEN,5,3,-2

/COM **** FIRST TRANSITION ELEMENTS ****
E,65,66,100
E,100,66,101
E,67,101,66

/COM **** SINGLE SHELL ****
E,100,101,103,102
EGEN,40,2,-1

/COM **** SECOND TRANSITION ELEMENTS ****
E,190,180,191
E,180,181,191
E,181,192,191

/COM **** TOP SHELL (DOUBLE ELEMENT) ****
E,190,191,194,193
EGEN,2,1,-1
EGEN,18,3,-2
E,244,245,986,985
EGEN,2,1,-1
E,256,257,988,987
E,257,258,989,988
E,985,986,981,980
EGEN,4,1,-1
E,980,981,248,247
EGEN,2,1,-1
E,982,983,260,249
E,983,984,261,260

/COM **** COLLAR TRANSITION & THREADED REGIONS ****
E,237,991,251,240
E,991,990,251
E,240,251,254,253
E,251,990,255,254
E,253,254,257,256
EGEN,2,1,-1
E,259,260,263,262
EGEN,2,1,-1
EGEN,12,3,-2
E,271,274,1000

/COM **** MERGE COINCIDENT NODES FOR SHELL ****
ESEL,S,TYPE,,1
NSLE
NUMMRG,NODE,
EALL
NALL
/COM **** END OF SHELL/COLLAR ELEMENT GENERATION ****

/COM **** LOCKING/LIFTING RING ELEMENTS ****
TYPE,3
MAT,1
E,411,412,402,401
```

```
EGEN,2,1,-1
EGEN,2,10,-2
E,413,888,876,403
E,881,404,876
E,888,881,876
E,888,414,881
E,881,882,877,404
E,414,889,882,881
E,882,883,878,877
E,889,890,883,882
E,883,884,405,878
E,890,415,884,883
E,884,885,879,405
E,415,891,885,884
E,885,886,880,879
E,891,892,886,885
E,886,887,406,880
E,892,416,887,886
E,423,900,888,413
E,893,414,888
E,900,893,888
E,900,424,893
E,893,894,889,414
E,424,901,894,893
E,894,895,890,889
E,901,902,895,894
E,895,896,415,890
E,902,425,896,895
E,896,897,891,415
E,425,903,897,896
E,897,898,892,891
E,903,904,898,897
E,898,899,416,892
E,904,426,899,898
E,431,432,422,421
E,905,423,422
E,432,905,422
E,432,433,905
E,905,906,900,423
E,433,908,906,905
E,906,907,424,900
E,908,434,907,906
E,441,442,432,431
EGEN,2,1,-1
E,443,908,433
E,443,444,434,908
E,451,452,442,441
EGEN,3,1,-1
EGEN,7,10,-3
E,454,912,910,444
E,464,914,912,454
E,474,916,914,464
E,484,918,916,474
E,494,920,918,484
E,504,922,920,494
E,514,924,922,504
```

```
E,458,448,911,913
E,468,458,913,915
E,478,468,915,917
E,488,478,917,919
E,498,488,919,921
E,508,498,921,923
E,518,508,923,925

/COM **** BOLT ****
TYPE,5
MAT,5
E,455,456,446,445
EGEN,8,10,-1
E,456,457,447,446
EGEN,8,10,-1
/COM ************ END OF LOCKING/LIFTING RING ************

/COM **** SHIELD PLUG ELEMENTS ****
TYPE,2
MAT,1
E,602,622,621,601
EGEN,11,1,-1
EGEN,2,20,-11
E,613,1290,612
E,1290,1280,632,612
E,1280,633,632
E,633,1270,632
E,1270,652,632
E,1270,653,652
E,643,663,662,642
EGEN,10,1,-1
EGEN,2,20,-10
E,673,693,692,672
EGEN,2,20,-10
E,653,1260,652
E,1260,672,652
E,1260,673,672
E,707,717,716,706
EGEN,7,1,-1
E,717,737,736,716
EGEN,7,1,-1
E,731,751,750,730
EGEN,13,1,-1
E,749,769,768,748
EGEN,15,1,-1
E,767,787,786,766
EGEN,17,1,-1
EGEN,2,20,-17
E,818,825,824,817
EGEN,6,1,-1
EGEN,5,7,-6
E,853,860,859,852
EGEN,6,1,-1
E,860,867,866,859
EGEN,3,1,-1
E,867,872,871,866
```

```
EGEN,4,1,-1
/COM ************ END OF SHIELD PLUG ************

/COM ************ LIFTING CAP ************
TYPE,1
MAT,1
E,1001,1006,1005
E,1002,1007,1006,1001
E,1004,1010,1009,1003
EGEN,4,1,-1
E,1009,1016,1015,1008
EGEN,5,1,-1
EGEN,2,7,-5
E,1015,1022,1021,1014
E,1022,1032,1031,1021
EGEN,6,1,-1
EGEN,8,10,-6
E,1102,1110,1109,1101
EGEN,2,1,-1
E,1110,1113,1112,1109
EGEN,2,1,-1
E,1105,1120,1104
E,1106,1121,1120,1105
EGEN,2,1,-1
E,1121,1124,1123,1120
EGEN,2,1,-1
EGEN,6,3,-2
E,1141,1142,1137,1134
E,1142,1143,1140,1137
E,1144,1145,1142,1141
EGEN,2,1,-1
EGEN,7,3,-2
E,295,296,1163,1162
E,296,297,1164,1163
E,1108,1107,1097
E,1108,1168,1122,1107
E,1168,1169,1125,1122
E,1169,1170,1128,1125
E,1170,1171,1131,1128
E,1171,1141,1134,1131
E,1172,1170,1169
E,1172,1173,1171,1170
E,1173,1144,1141,1171
E,1174,1175,1173,1172
E,1175,1147,1144,1173
E,1176,1175,1174
E,1176,1150,1147,1175
E,1177,1153,1150,1176
E,1178,1156,1153,1177
E,1179,1159,1156,1178
E,1162,1159,1179
/COM ************ END OF LIFTING CAP ************

/COM ************ FILTER GUARD PLATE ************
E,1200,1201,858,851
E,1201,1202,865,858
```

```
E,1203,1204,1201,1200
EGEN,2,1,-1
EGEN,6,3,-2
E,1221,1222,1219,1218
E,1222,1223,1220,1219
E,1226,1215,1212,1225
E,1227,1218,1215,1226
E,1228,1221,1218,1227
E,1230,1226,1225,1229
EGEN,3,1,-1
EGEN,6,4,-3
E,1257,1250,1249,1256
EGEN,3,1,-1
E,1264,1254,1253,1263
EGEN,6,1,-1
E,1271,1261,1260,1270
EGEN,9,1,-1
E,1281,1271,1270,1280
EGEN,4,1,-1
E,1291,1281,1280,1290
EGEN,2,1,-1

/COM ************ CONTACT ELEMENTS *************
/COM **** BETWEEN LOCKING RING & SHIELD PLUG ****
TYPE,4
REAL,4
E,806,401
E,807,411
E,808,421
E,809,431
E,810,441
E,811,451
E,812,461
E,813,471
E,814,481
E,815,491
E,816,501
E,817,511

/COM **** BETWEEN SHIELD PLUG & BOTTOM OF BOLT
REAL,5
E,845,525
E,852,526
E,859,527

/COM **** BETWEEN SHIELD PLUG & SHELL (ABOVE SEAL)
REAL,4
E,871,271
E,872,268
E,873,265
E,874,262

/COM **** BETWEEN SHIELD PLUG & SHELL (BELOW SEAL)
E,863,980

/COM **** BETWEEN SHIELD PLUG AND SEAL LIP
```

```
TYPE,4
REAL,6
E,248,870
E,249,875

TYPE,4
REAL,8
E,248,869
E,247,862

/COM **** BOTTOM GAP ELEMENTS ****
TYPE,4
REAL,7
E,2001,1
EGEN,10,1,-1
/COM ************ END GAP ELEMENTS ************

/COM ************ BOUNDARY CONDITIONS ************
CSYS,0
NSEL,S,LOC,X,0
NSEL,R,LOC,Y,-1.33,163.616
D,ALL,UX,0
NALL
EALL
NSEL,S,NODE,,1002
D,ALL,UX,0
NALL
EALL
NSEL,S,NODE,,2001,2010
D,ALL,ALL,0
EALL
NALL
SAVE

/COM **** LOAD 1: APPLYING 28g EQUIVALENT ACCELERATION ****
NSEL,S,LOC,X,0,10.2
NSEL,R,LOC,Y,163.615,163.617
SF,ALL,PRES,1662.94
NALL
EALL
SAVE
FINI

!*****************************************************************
/COM ***************      SOLUTION PHASE      **************
/SOLUTION
SOLVE
SAVE
FINI

/COM **** POSTPROCESSING ****
/POST1
SET,LAST
/TYPE,ALL,HIDC
/GLINE,ALL,0
RSYS,0
```

```
PLNSOL,S,INT
/DSCALE,,20
/REPLOT
NSEL,S,LOC,X,11.49,11.51
NSEL,R,LOC,Y,-0.33,148
PRNS,U,X
NALL
EALL
NSEL,S,LOC,X,1.356,11.26
NSEL,R,LOC,Y,141.87,143.39
PRNS,U,Y
NALL
EALL
PRRS,F
LPATH,1,41
PRSECT
LPATH,6,46
PRSECT
LPATH,10,50
PRSECT
LPATH,50,52
PRSECT
LPATH,62,64
PRSECT
LPATH,65,67
PRSECT
LPATH,100,101
PRSECT
LPATH,122,123
PRSECT
LPATH,134,135
PRSECT
LPATH,156,157
PRSECT
LPATH,170,171
PRSECT
LPATH,180,181
PRSECT
LPATH,202,204
PRSECT
LPATH,235,237
PRSECT
LPATH,985,989
PRSECT
LPATH,262,264
PRSECT
LPATH,277,279
PRSECT
LPATH,292,294
PRSECT
LPATH,601,641
PRSECT
LPATH,601,613
PRSECT
LPATH,603,703
PRSECT
```

```
LPATH,606,706
PRSECT
LPATH,766,806
PRSECT
LPATH,748,808
PRSECT
LPATH,736,815
PRSECT
LPATH,869,874
PRSECT
LPATH,870,875
PRSECT
LPATH,431,434
PRSECT
LPATH,406,426
PRSECT
LPATH,404,424
PRSECT
LPATH,1120,1097
PRSECT
LPATH,1120,1168
PRSECT
LPATH,1174,1149
PRSECT
LPATH,1176,1152
PRSECT
LPATH,1177,1155
PRSECT
LPATH,1178,1158
PRSECT
LPATH,1179,1161
PRSECT
LPATH,1162,1164
PRSECT
LPATH,295,297
PRSECT
LPATH,1021,1027
PRSECT
LPATH,1071,1077
PRSECT
LPATH,1138,1169
PRSECT
SAVE
```

COMPUTER RUN COVER SHEET

Project Number:	KH-8009-8
Computer Code:	ANSYS®-PC
Software Version:	5.0A
Computer System:	MS-DOS, Pentium® Processor
Computer Run File Number:	KH-8009-8-03
Unique Computer Run Filename:	CSBMC.out
Run Description:	MCO CSB Tube Drop with Lifting Cap
Run Date / Time:	30 March 1997 11:48:18 AM

Prepared By: Zachary G. Sargent Date: ZGS 4/18/97

Checked By: Joe Nichols Date: 4/17/97

COMPUTER RUN COVER SHEET

Project Number:	KH-8009-8
Computer Code:	ANSYS®-PC
Software Version:	5.0A
Computer System:	MS-DOS, Pentium® Processor
Computer Run File Number:	KH-8009-8-03
Unique Computer Run Filename:	CSB.inp
Run Description:	MCO CSB Tube Drop without Lifting Cap
Creation Date / Time:	30 March 1997 10:53:20 AM

Prepared By: Zachary G. Sargent — Date: 4/18/97

Checked By: Joe Nichols — Date: 4/17/97

LISTING OF CSB.INP FILE

```
/BATCH,LIST
/FILENAM,CSB
/PREP7
/TITLE,MCO DESIGN- 132 DEGREES C, 28g CSB TUBE DROP

TREF,70
TUNIF,270
ETAN=0.006                ! Tangent modulus

/COM **** ELEMENT TYPES ****
ET,1,42,,,1               ! Shell
ET,2,42,,,1               ! Shield Plug
ET,3,42,,,1               ! Lifting & Locking Ring
ET,4,12                   ! Gap Elements Between Shield Plug & Shell
KEYOPT,4,7,1
ET,5,42,,,1               ! Bolt

/COM **** REAL CONSTANTS FOR GAP ELEMENTS ****
R,4,-90,1.0e8,-0.06,3.0       ! Shell/Shield Plug, Initially Open .06"
R,5,0,1.0e8,2.95e-03          ! L. Ring/Shield Plug, Under Bolt, Preloaded
R,6,0,1.0e8,0,2.0             ! Sealing Surface, closed
R,7,0,1.0e8,0,1.0             ! Bottom MCO Plate, closed
R,8,0,2.42e7,,2.0             ! Seal Spring, Max. Stiffness (Unloading Stif.)

/COM ************ MATERIAL PROPERTIES **************
MP,DENS,1,490/1728            ! 304L SS
MP,NUXY,1,0.3

MP,DENS,5,490/1728            ! SA193 Grade B8M
MP,NUXY,5,0.3

TB,BKIN,1,6                   ! Yield Stress & Tangent Moduli v. Temp.
TBTEMP,100
TBDATA,1,25000,ETAN*28.1E+06
TBTEMP,200
TBDATA,1,21300,ETAN*27.6E+06
TBTEMP,300
TBDATA,1,19100,ETAN*27.0E+06
TBTEMP,400
TBDATA,1,17500,ETAN*26.5E+06
TBTEMP,500
TBDATA,1,16300,ETAN*25.8E+06
TBTEMP,600
TBDATA,1,15500,ETAN*25.3E+06

/COM **** DEFINING TEMPERATURES FOR MPDATA ****
MPTEMP,1, 70,100,200,300,400,500
MPTEMP,7,600,650,700,750

/COM **** DEFINING ELASTIC MODULI FOR 304L & SA-193 ****
MPDATA,EX,1,1,28.3e+06,28.1e+06,27.6e+06,27.0e+06,26.5e+06,25.8e+06
MPDATA,EX,1,7,25.3e+06,25.1e+06,24.8e+06,24.5e+06
/COM                      ! SA-193
```

```
MPDATA,EX,5,1,28.3e+06,28.1e+06,27.6e+06,27.0e+06,26.5e+06,25.8e+06
MPDATA,EX,5,7,25.3e+06,25.1e+06,24.8e+06,24.5e+06

/COM **** MEAN COEFFICIENTS OF THERMAL EXPANSION (in./in./(F) ****
! SA240 Gr 304L
MPDATA,ALPX,1,1,0,8.55e-06,8.79e-06,9.00e-06,9.19e-06,9.37e-06
MPDATA,ALPX,1,7,9.53e-06,9.61e-06,9.69e-06,9.76e-06

! SA193 Gr B8M
MPDATA,ALPX,5,1,0,8.54e-06,8.76e-06,8.97e-06,9.21e-06,9.42e-06
MPDATA,ALPX,5,7,9.60e-06,9.69e-06,9.76e-06,9.81e-06

/COM ************* SHELL GEOMETRY ****************
IR=11.5              ! Internal Shell Radius @ Bottom
OR=12.000            ! Shell Outside Radius @ Bottom
IR2 = 12.02          ! Inside Radius at Collar Sealing Surface
OR2 = 12.625         ! Outside Radius at Collar Sealing Surface
IR3 = 12.25          ! Inside Radius at Collar-Lifting Ring Weld

/COM **** BOTTOM COVER PLATE  [DWG SK-2-300378] ****
N,1,,-1.32           ! Row 1
N,2,1.25,-1.32
N,3,2.13,-1.32
N,10,11.423,-1.32
FILL

N,41,0.00,-0.44      ! Row 3
N,42,1.25,-0.44
N,43,2.13,0.44
N,50,IR,0.44
FILL,43,50
N,52,OR,0.44
FILL,50,52

FILL,1,41,1,21,1,10  ! Middle Row
FILL,10,50,1,30
N,32,12,-0.32
FILL,30,32
FILL,10,32,1,11
N,53,IR,1.17
N,55,OR,1.17         ! Shell Stub/Weld
FILL,53,55

/COM **** SHELL [DWGS SK-2-300379 & SK-2-300461] ****
N,65,IR,6.68
N,67,OR,6.68
FILL
FILL,53,65,3,,3,3,1

/COM **** SINGLE ROW SHELL ****
N,100,IR,7.18        ! Inside
N,140,IR,71.68
N,180,IR,136.68

N,101,OR,7.18        ! Outside
N,141,OR,71.68
```

```
N,181,OR,136.68
FILL,100,140,20,,2,2,1,2.0
FILL,140,180,19,,2,2,1,.5

/COM **** DOUBLE ROW SHELL ****
N,190,IR,137.18              ! Transition to Double Row
N,192,OR,137.18
FILL

/COM **** BASE OF CASK THROAT--ELEVATION: 138 INCHES ****
N,217,IR,142.68              ! Transition to Double Row
N,219,OR,142.68
FILL
FILL,190,217,8,,3,3,1        ! Vertical Fill

/COM **** BOTTOM OF COLLAR TRANSITION ****
N,235,IR,146.06              ! Start of Transition to Large O.D &
N,237,OR,146.06              ! Assumed Location of Shield Plug Taper
FILL
N,238,IR,146.68
N,240,OR,146.68
FILL                 ! Horizontal Fill
FILL,217,235,5,,3,3,1        ! Vertical Fill

/COM **** TOP OF COLLAR TRANSITION ****
N,241,IR,147.31              ! End of Transition to Large O.D &
N,243,OR,147.31              ! Assumed Location of Shield Plug Taper
FILL                 ! Horizontal Fill
NGEN,2,3,241,243,1,,0.75

/COM **** COLLAR SEALING SURFACE ****
N,247,IR,149.63              ! Inside Radius of Sealing Surface
N,249,IR2,149.63             ! Outside Radius at Sealing Surface
FILL                 ! Horizontal Fill

/COM **** THICK WALL AT COLLAR TRANSITION ****
NGEN,2,10,240,249,3          ! Nodes 250-259 Coincident w/240-249 (by 3)
N,255,OR2,147.31             ! Outside Surface
N,261,OR2,149.63             ! Outside Surface
N,258,OR2,148.06
N,980,IR,149.38
N,981,11.755,149.38
N,982,IR2,149.38
N,983,12.317,149.38
N,984,OR2,149.38
N,990,OR2,146.68
FILL,240,990,1,251
NGEN,2,5,980,984,1,,-0.66
FILL,246,258,1,257
FILL,253,255,1,,1,3,3
FILL,237,990,1,991

/COM **** COLLAR AT BOTTOM EDGE OF PLUG (.155" above Sealing Surface) ****
NGEN,2,3,259,,,,0.245        ! Nodes 262

/COM **** COLLAR AT TOP EDGE OF PLUG (2" above bottom Edge) ****
```

```
NGEN,2,9,262,,,,2.00          ! Nodes 271
FILL,262,271,2

/COM **** COLLAR AT BASE OF THREADS ****
N,274,IR3,152.00
N,1000,IR2,152.00

/COM **** TOP TO COLLAR (WELD CLOSURE) ****
N,295,IR3,156.00
FILL,274,295
NGEN,3,1,259,295,3,(OR2-IR2)/2
NGEN,3,1,274,295,3,(OR2-IR3)/2

/COM ************ LOCKING & LIFTING RING GEOMETRY **************
RING1=7.94
RING2=9.375
RING3=9.625
RING4=10.19
RING5=12.23
LOCAL,11,0,,152.00            ! Local System z=0 at Base of Ring
CSYS,11

/COM **** TOP EDGE ****
N,401,RING1,6.13
CSYS,O
N,404,9.375,158.13
FILL,401,404,,,1
N,406,RING4,158.13
FILL,404,406,,,1              ! Top Edge

/COM **** LIFTING SURFACE ****
CSYS,11
N,421,RING1,5.13
N,424,RING2,5.13
FILL,421,424
N,426,RING4,5.13
FILL,424,426
FILL,401,421,1,,10,6,1
N,431,RING1,6.13-1.56
N,434,RING2,6.13-1.56
FILL

/COM **** BOLTING SURFACE ****
N,441,RING1,4
N,444,RING3,4
FILL
N,445,10.9375-.6875,4          ! Inside Edge of Bolt Hole
N,447,10.9375+.6875,4          ! Outside Edge of Bolt Hole
FILL
N,910,10.9375-.6875,4
N,911,10.9375+.6875,4
N,448,RING5,4                  ! O.D of Ring
CSYS,0                         ! Bolt Extension
N,924,10.25,152.00             ! Double Nodes @ Bolt for Gap elements
N,925,11.625,152.00
FILL,910,924,6,,2
```

```
FILL,911,925,6,,2
N,525,10.25,151.874          ! Bottom of Bolt Extension
N,527,11.625,151.874
FILL

/COM **** BOTTOM OF LIFTING/LOCKING RING ****
CSYS,11
NGEN,2,70,441,448,1,,-4      ! Bottom Surface of Lifting/Locking Ring
FILL,441,511,6,,10,8,1       ! Fill in Lifting/Locking Ring

/COM ************ SHIELD PLUG (offset y by 158.25) **************
LOCAL,20,0,,158.13
TYPE,2
PLUGR1=11.975
PLUGR2=11.45
PLUGR3=11.25
PLUGR4=7.89

/COM **** NODES AT PLUG AXIS (r=0) ****
N,601
N,602,0,-1
N,603,0,-1.994
N,606,0,-4.994
FILL,603,606,2,604
N,607,0,-6.25
N,610,0,-8.25
FILL,607,610,2,608
N,611,0,-8.75
N,613,0,-10.5
FILL,611,613

/COM **** NODAL GENERATION ****
NGEN,2,20,601,613,1,0.8825
NGEN,2,20,621,633,1,0.8825          ! Id Large Opening
NGEN,2,20,642,653,1,0.6875
NGEN,2,20,662,673,1,0.6875          ! Id Medium Opening
NGEN,2,20,683,693,1,0.4235          ! Id Small Opening
NGEN,2,10,706,713,1,0.9515          ! Center of Opening

N,730,5.4665,-1.994                 ! Od Small Opening
N,736,5.4665,-4.994
FILL,730,736,5,731
N,737,5.4665,-6.25
N,740,5.4665,-8.25
FILL,737,740,2,738
N,741,5.4665,-8.75
N,743,5.4665,-10.5
FILL,741,743
N,748,5.89,-1.0
NGEN,2,20,730,743,1,0.4235
FILL,748,750
N,766,7.265,0
NGEN,2,20,748,763,1,1.375
FILL,766,768
NGEN,3,20,766,768,1,0.3125
N,789,7.5775,-1.56
```

```
N,796,7.5775,-5.56
FILL,789,796,6
NGEN,2,20,789,796,1,0.3125
NGEN,3,20,777,783,1,0.3125

/COM **** UNDER LOCKING RING ****
N,824,8.5017,-6.25
N,827,8.5017,-8.25
FILL
N,828,8.5017,-8.75
N,830,8.5017,-10.5
FILL
NGEN,3,7,824,830,1,0.5616
NGEN,2,7,838,844,1,0.625
NGEN,2,7,845,851,1,0.6875      ! Under Bolt
N,859,11.625,-6.25
N,860,11.625,-6.917
N,861,11.625,-7.584
N,862,PLUGR2,-8.25
N,863,PLUGR2,-8.75
N,865,PLUGR3,-10.5
FILL,863,865,1
N,866,PLUGR1-0.255,-6.25
N,869,PLUGR1-0.255,-8.25
FILL,866,869,2
N,870,PLUGR1-0.255,-8.476
NGEN,2,5,866,870,1,0.255

/COM **** REFINING LIFTING EAR ****
CSYS,0
N,877,9.53,158.13
N,889,9.53,157.63
N,901,9.53,157.13
FILL,403,404,1,876
FILL,413,414,1,888
FILL,423,424,1,900
FILL,877,405,1,878
FILL,405,406,2,879,1
FILL,889,415,1,890
FILL,415,416,2,891,1
FILL,404,414,1,881
FILL,877,889,1,882
FILL,878,890,1,883
FILL,405,415,1,884
FILL,879,891,1,885
FILL,880,892,1,886
FILL,406,416,1,887
FILL,889,901,1,894
FILL,414,424,1,893
FILL,901,425,1,902
FILL,890,902,1,895
FILL,415,425,1,896
FILL,425,426,2,903,1
FILL,891,903,1,897
FILL,892,904,1,898
FILL,416,426,1,899
```

```
FILL,424,434,1,907
FILL,433,434,1,908
FILL,423,433,1,905
FILL,905,907


/COM **** FILTER GUARD PLATE ****
PLATE1=0.273
PLATE2=0.6575
PLATE3=1.357
PLATE4=10.25
PLATE5=11.25

N,1200,PLATE4,146.78
N,1202,PLATE5,146.78
FILL
NGEN,5,3,1200,1202,,,-0.85
NGEN,2,3,1212,1214,,,-0.25
N,1221,PLATE4,141.88
N,1222,10.75,141.88
N,1223,10.915,141.88
FILL,1215,1221,1,1218
FILL,1223,1217,1,1220
FILL,1216,1222,1,1219
N,1237,6.4375,143.38
FILL,1212,1237,3,1225,4
N,1249,3.578,143.38
FILL,1237,1249,2,1241,4
NGEN,2,1,1225,1249,4,,-0.25
NGEN,2,2,1226,1250,4,,-1.25
FILL,1226,1228,1,1227,,7,4
N,1253,2.625,145.255
N,1254,2.625,145.005
N,1256,2.625,143.38
FILL,1254,1256
N,1257,2.625,143.13
N,1259,2.625,141.88
FILL,1257,1259
NGEN,2,10,1253,1259,1,-0.5
NGEN,2,10,1263,1269,1,-0.768
N,1283,0.6575,145.255
N,1284,0.6575,145.005
N,1260,2.125,147.63
N,1270,1.357,147.63
N,1280,0.6575,147.63
N,1290,0.273,147.63
NGEN,3,1,1260,1290,10,,-0.5625

/COM **** NODES AT BOTTOM GAP ELEMENTS ****
NGEN,2,2000,1,10,1,,-1.00


/COM **** COUPLING NODES ****
/COM **** BETWEEN LIFTING/LOCKING RING & SHELL ****
CP,1,UY,508,277          ! Start Threads
CP,2,UY,498,280
```

```
CP,3,UY,488,283
CP,4,UY,478,286
CP,5,UY,468,289
CP,6,UY,458,292

/COM **** BETWEEN BOLT & LOCKING RING ****
CP,7,UY,445,910
CP,8,UX,445,910
CP,9,UY,447,911
CP,10,UX,447,911
*DO,I,1,7
CP,10+I,UY,445+10*I,910+2*I
*ENDDO
*DO,I,1,7
CP,17+I,UY,447+10*I,911+2*I
*ENDDO
*DO,I,1,7
CP,24+I,UX,445+10*I,910+2*I
*ENDDO
*DO,I,1,7
CP,31+I,UX,447+10*I,911+2*I
*ENDDO
NALL
EALL

/COM **** ELEMENT GENERATION FOR SHELL ****
TYPE,1
MAT,1

/COM **** BOTTOM OF SHELL ****
E,1,2,22,21
E,2,3,23,22
EGEN,8,1,-1
E,10,11,30
E,21,22,42,41
E,22,23,43,42
EGEN,10,1,-1
E,11,31,30
E,11,32,31

/COM **** SHELL ****
E,50,51,54,53
EGEN,2,1,-1
EGEN,5,3,-2

/COM **** FIRST TRANSITION ELEMENTS ****
E,65,66,100
E,100,66,101
E,67,101,66

/COM **** SINGLE SHELL ****
E,100,101,103,102
EGEN,40,2,-1

/COM **** SECOND TRANSITION ELEMENTS ****
E,190,180,191
```

```
E,180,181,191
E,181,192,191

/COM **** TOP SHELL (DOUBLE ELEMENT) ****
E,190,191,194,193
EGEN,2,1,-1
EGEN,18,3,-2
E,244,245,986,985
EGEN,2,1,-1
E,256,257,988,987
E,257,258,989,988
E,985,986,981,980
EGEN,4,1,-1
E,980,981,248,247
EGEN,2,1,-1
E,982,983,260,249
E,983,984,261,260

/COM **** COLLAR TRANSITION & THREADED REGIONS ****
E,237,991,251,240
E,991,990,251
E,240,251,254,253
E,251,990,255,254
E,253,254,257,256
EGEN,2,1,-1
E,259,260,263,262
EGEN,2,1,-1
EGEN,12,3,-2
E,271,274,1000

/COM **** MERGE COINCIDENT NODES FOR SHELL ****
ESEL,S,TYPE,,1
NSLE
NUMMRG,NODE,
EALL
NALL
/COM **** END OF SHELL/COLLAR ELEMENT GENERATION ****

/COM **** LOCKING/LIFTING RING ELEMENTS ****
TYPE,3
MAT,1
E,411,412,402,401
EGEN,2,1,-1
EGEN,2,10,-2
E,413,888,876,403
E,881,404,876
E,888,881,876
E,888,414,881
E,881,882,877,404
E,414,889,882,881
E,882,883,878,877
E,889,890,883,882
E,883,884,405,878
E,890,415,884,883
E,884,885,879,405
E,415,891,885,884
```

```
E,885,886,880,879
E,891,892,886,885
E,886,887,406,880
E,892,416,887,886
E,423,900,888,413
E,893,414,888
E,900,893,888
E,900,424,893
E,893,894,889,414
E,424,901,894,893
E,894,895,890,889
E,901,902,895,894
E,895,896,415,890
E,902,425,896,895
E,896,897,891,415
E,425,903,897,896
E,897,898,892,891
E,903,904,898,897
E,898,899,416,892
E,904,426,899,898
E,431,432,422,421
E,905,423,422
E,432,905,422
E,432,433,905
E,905,906,900,423
E,433,908,906,905
E,906,907,424,900
E,908,434,907,906
E,441,442,432,431
EGEN,2,1,-1
E,443,908,433
E,443,444,434,908
E,451,452,442,441
EGEN,3,1,-1
EGEN,7,10,-3
E,454,912,910,444
E,464,914,912,454
E,474,916,914,464
E,484,918,916,474
E,494,920,918,484
E,504,922,920,494
E,514,924,922,504
E,458,448,911,913
E,468,458,913,915
E,478,468,915,917
E,488,478,917,919
E,498,488,919,921
E,508,498,921,923
E,518,508,923,925

/COM **** BOLT ****
TYPE,5
MAT,5
E,455,456,446,445
EGEN,8,10,-1
E,456,457,447,446
```

```
EGEN,8,10,-1
/COM ************ END OF LOCKING/LIFTING RING ************

/COM **** SHIELD PLUG ELEMENTS ****
TYPE,2
MAT,1
E,602,622,621,601
EGEN,11,1,-1
EGEN,2,20,-11
E,613,1290,612
E,1290,1280,632,612
E,1280,633,632
E,633,1270,632
E,1270,652,632
E,1270,653,652
E,643,663,662,642
EGEN,10,1,-1
EGEN,2,20,-10
E,673,693,692,672
EGEN,2,20,-10
E,653,1260,652
E,1260,672,652
E,1260,673,672
E,707,717,716,706
EGEN,7,1,-1
E,717,737,736,716
EGEN,7,1,-1
E,731,751,750,730
EGEN,13,1,-1
E,749,769,768,748
EGEN,15,1,-1
E,767,787,786,766
EGEN,17,1,-1
EGEN,2,20,-17
E,818,825,824,817
EGEN,6,1,-1
EGEN,5,7,-6
E,853,860,859,852
EGEN,6,1,-1
E,860,867,866,859
EGEN,3,1,-1
E,867,872,871,866
EGEN,4,1,-1
/COM ************ END OF SHIELD PLUG ************

/COM ************ FILTER GUARD PLATE ************
E,1200,1201,858,851
E,1201,1202,865,858
E,1203,1204,1201,1200
EGEN,2,1,-1
EGEN,6,3,-2
E,1221,1222,1219,1218
E,1222,1223,1220,1219
E,1226,1215,1212,1225
E,1227,1218,1215,1226
E,1228,1221,1218,1227
```

```
E,1230,1226,1225,1229
EGEN,3,1,-1
EGEN,6,4,-3
E,1257,1250,1249,1256
EGEN,3,1,-1
E,1264,1254,1253,1263
EGEN,6,1,-1
E,1271,1261,1260,1270
EGEN,9,1,-1
E,1281,1271,1270,1280
EGEN,4,1,-1
E,1291,1281,1280,1290
EGEN,2,1,-1

/COM ********** CONTACT ELEMENTS **********
/COM **** BETWEEN LOCKING RING & SHIELD PLUG ****
TYPE,4
REAL,4
E,806,401
E,807,411
E,808,421
E,809,431
E,810,441
E,811,451
E,812,461
E,813,471
E,814,481
E,815,491
E,816,501
E,817,511

/COM **** BETWEEN SHIELD PLUG & BOTTOM OF BOLT
REAL,5
E,845,525
E,852,526
E,859,527

/COM **** BETWEEN SHIELD PLUG & SHELL (ABOVE SEAL)
REAL,4
E,271,871
E,268,872
E,265,873
E,262,874

/COM **** BETWEEN SHIELD PLUG & SHELL (BELOW SEAL)
E,863,980

/COM **** BETWEEN SHIELD PLUG AND SEAL LIP
TYPE,4
REAL,6
E,248,870
E,249,875

TYPE,4
REAL,8
E,248,869
```

```
E,247,862

/COM **** BOTTOM GAP ELEMENTS
TYPE,4
REAL,7
E,2001,1
EGEN,10,1,-1
NALL
EALL
/COM ************* END GAP ELEMENTS *************

/COM ************* BOUNDARY CONDITIONS *************
CSYS,0
NSEL,S,LOC,X,0
NSEL,R,LOC,Y,-1.33,158.14
D,ALL,UX,0
NALL
EALL
NSEL,S,NODE,,2001,2010
D,ALL,ALL,0
EALL
NALL
SAVE

/COM **** LOAD 1: APPLYING EQUIVALENT 28g CSB DROP *************
NSEL,S,NODE,,601,641,20
NSEL,A,NODE,,766,806,20
SF,ALL,PRES,13555          ! 28g x 19142 = 535976 LB
NALL                  ! Shield plug area =39.54 in^2
EALL                  ! P/A = 13555 psi
FINI

!*****************************************************************
/COM ***************      SOLUTION PHASE      *************
/SOLUTION
SOLVE
SAVE
FINI

/COM **** POSTPROCESSING ****
/POST1
SET,LAST
/TYPE,ALL,HIDC
/GLINE,ALL,0
RSYS,0
PLNSOL,S,INT
/DSCALE,,20
/REPLOT
NSEL,S,LOC,X,11.49,11.51
NSEL,R,LOC,Y,-0.33,149.63
PRNS,U,X
NALL
EALL
NSEL,S,LOC,X,1.356,11.26
NSEL,R,LOC,Y,141.87,143.39
PRNS,U,Y
```

```
NALL
EALL
LPATH,1,41
PRSECT
LPATH,6,46
PRSECT
LPATH,10,50
PRSECT
LPATH,50,52
PRSECT
LPATH,62,64
PRSECT
LPATH,65,67
PRSECT
LPATH,100,101
PRSECT
LPATH,122,123
PRSECT
LPATH,134,135
PRSECT
LPATH,156,157
PRSECT
LPATH,170,171
PRSECT
LPATH,180,181
PRSECT
LPATH,202,204
PRSECT
LPATH,235,237
PRSECT
LPATH,985,989
PRSECT
LPATH,262,264
PRSECT
LPATH,277,279
PRSECT
LPATH,292,294
PRSECT
LPATH,601,641
PRSECT
LPATH,601,613
PRSECT
LPATH,603,703
PRSECT
LPATH,606,706
PRSECT
LPATH,766,806
PRSECT
LPATH,748,808
PRSECT
LPATH,730,810
PRSECT
LPATH,736,815
PRSECT
LPATH,869,874
PRSECT
```

```
LPATH,870,875
PRSECT
LPATH,431,434
PRSECT
LPATH,406,426
PRSECT
LPATH,404,424
PRSECT
SAVE
```

COMPUTER RUN COVER SHEET

Project Number:	KH-8009-8
Computer Code:	ANSYS®-PC
Software Version:	5.0A
Computer System:	MS-DOS, Pentium® Processor
Computer Run File Number:	KH-8009-8-03
Unique Computer Run Filename:	CSB.out
Run Description:	MCO CSB Tube Drop without Lifting Cap
Run Date / Time:	30 March 1997 11:08:20 AM

Prepared By: Zachary G. Sargent — Date: 4/8/97

Checked By: Joe Nichols — Date: 4/17/97

COMPUTER RUN COVER SHEET

Project Number:	KH-8009-8
Computer Code:	ANSYS®-PC
Software Version:	5.0A
Computer System:	MS-DOS, Pentium® Processor
Computer Run File Number:	KH-8009-8-03
Unique Computer Run Filename:	TEDMC.inp
Run Description:	MCO Top End Drop with Lifting Cap
Creation Date / Time:	30 March 1997 10:54:54 AM

Prepared By: Zachary G. Sargent Date 4/18/97

Checked By: Joe Nichols Date 4/17/97

LISTING OF TEDMC.INP FILE

```
/BATCH,LIST
/FILENAM,TEDMC
/PREP7
/TITLE,132 DEGREES C, 150 psi, 28 g TOP END DROP W/ MODIFIED CAP

TREF,70
TUNIF,270
ETAN=0.006              ! Tangent modulus


/COM **** ELEMENT TYPES ****
ET,1,42,,,1             ! Shell
ET,2,42,,,1             ! Shield Plug
ET,3,42,,,1             ! Lifting & Locking Ring
ET,4,12                 ! Gap Elements Between Shield Plug & Shell
KEYOPT,4,7,1
ET,5,42,,,1             ! Bolt

/COM **** REAL CONSTANTS FOR GAP ELEMENTS ****
R,4,-90,1.0E8,-0.06,3.0     ! Shell/Shield Plug, Initially Open .06"
R,5,0,1.0E8,2.95e-03        ! L. Ring/Shield Plug, Under Bolt, Preloaded
R,6,0,1.0E8,0,2.0           ! Sealing Surface, closed
R,7,0,1.0E8,0,1.0           ! Anchoring for drop, closed
R,8,0,2.42e7,0,2.0          ! Seal Spring, Max Stiffness

/COM ************ MATERIAL PROPERTIES **************
MP,DENS,1,490/1728          ! 304L SS
MP,NUXY,1,0.3

MP,DENS,5,490/1728          ! SA193 Grade B8M
MP,NUXY,5,0.3

TB,BKIN,1,6             ! Yield Stress & Tangent Moduli v. Temp.
TBTEMP,100
TBDATA,1,25000,ETAN*28.1E+06
TBTEMP,200
TBDATA,1,21300,ETAN*27.6E+06
TBTEMP,300
TBDATA,1,19100,ETAN*27.0E+06
TBTEMP,400
TBDATA,1,17500,ETAN*26.5E+06
TBTEMP,500
TBDATA,1,16300,ETAN*25.8E+06
TBTEMP,600
TBDATA,1,15500,ETAN*25.3E+06


/COM **** DEFINING TEMPERATURES FOR MPDATA ****
MPTEMP,1, 70,100,200,300,400,500
MPTEMP,7,600,650,700,750

/COM **** DEFINING ELASTIC MODULI FOR 304L & SA-193 ****
MPDATA,EX,1,1,28.3e+06,28.1e+06,27.6e+06,27.0e+06,26.5e+06,25.8e+06
```

```
MPDATA,EX,1,7,25.3e+06,25.1e+06,24.8e+06,24.5e+06
/COM                    ! SA-193
MPDATA,EX,5,1,28.3e+06,28.1e+06,27.6e+06,27.0e+06,26.5e+06,25.8e+06
MPDATA,EX,5,7,25.3e+06,25.1e+06,24.8e+06,24.5e+06

/COM **** MEAN COEFFICIENTS OF THERMAL EXPANSION (in./in./(F) ****
! SA240 Gr 304L
MPDATA,ALPX,1,1,0,8.55e-06,8.79e-06,9.00e-06,9.19e-06,9.37e-06
MPDATA,ALPX,1,7,9.53e-06,9.61e-06,9.69e-06,9.76e-06

! SA193 Gr B8M
MPDATA,ALPX,5,1,0,8.54e-06,8.76e-06,8.97e-06,9.21e-06,9.42e-06
MPDATA,ALPX,5,7,9.60e-06,9.69e-06,9.76e-06,9.81e-06

/COM ************ SHELL GEOMETRY ****************
IR=11.5                 ! Internal Shell Radius @ Bottom
OR=12.000               ! Shell Outside Radius @ Bottom
IR2 = 12.02             ! Inside Radius at Collar Sealing Surface
OR2 = 12.625            ! Outside Radius at Collar Sealing Surface
IR3 = 12.25             ! Inside Radius at Collar-Lifting Ring Weld

/COM **** BOTTOM COVER PLATE  [DWG SK-2-300378] ****
N,1,,-1.32                  ! Row 1
N,2,1.25,-1.32
N,3,2.13,-1.32
N,10,11.423,-1.32
FILL

N,41,0.00,-0.44         ! Row 3
N,42,1.25,-0.44
N,43,2.13,0.44
N,50,IR,0.44
FILL,43,50
N,52,OR,0.44
FILL,50,52

FILL,1,41,1,21,1,10         ! Middle Row
FILL,10,50,1,30
N,32,12,-0.32
FILL,30,32
FILL,10,32,1,11
N,53,IR,1.17
N,55,OR,1.17            ! Shell Stub/Weld
FILL,53,55

/COM **** SHELL [DWGS SK-2-300379 & SK-2-300461] ****
N,65,IR,6.68
N,67,OR,6.68
FILL
FILL,53,65,3,,3,3,1

/COM **** SINGLE ROW SHELL ****
N,100,IR,7.18           ! Inside
N,140,IR,71.68
N,180,IR,136.68
```

```
N,101,OR,7.18              ! Outside
N,141,OR,71.68
N,181,OR,136.68
FILL,100,140,20,,2,2,1,2.0
FILL,140,180,19,,2,2,1,.5

/COM **** DOUBLE ROW SHELL ****
N,190,IR,137.18            ! Transition to Double Row
N,192,OR,137.18
FILL

/COM **** BASE OF CASK THROAT--ELEVATION: 138 INCHES ****
N,217,IR,142.68            ! Transition to Double Row
N,219,OR,142.68
FILL
FILL,190,217,8,,3,3,1      ! Vertical Fill

/COM **** BOTTOM OF COLLAR TRANSITION ****
N,235,IR,146.06            ! Start of Transition to Large O.D &
N,237,OR,146.06            ! Assumed Location of Shield Plug Taper
FILL
N,238,IR,146.68
N,240,OR,146.68
FILL                ! Horizontal Fill
FILL,217,235,5,,3,3,1      ! Vertical Fill

/COM **** TOP OF COLLAR TRANSITION ****
N,241,IR,147.31            ! End of Transition to Large O.D &
N,243,OR,147.31            ! Assumed Location of Shield Plug Taper
FILL                ! Horizontal Fill
NGEN,2,3,241,243,1,,0.75

/COM **** COLLAR SEALING SURFACE ****
N,247,IR,149.63            ! Inside Radius of Sealing Surface
N,249,IR2,149.63           ! Outside Radius at Sealing Surface
FILL                ! Horizontal Fill

/COM **** THICK WALL AT COLLAR TRANSITION ****
NGEN,2,10,240,249,3        ! Nodes 250-259 Coincident w/240-249 (by 3)
N,255,OR2,147.31           ! Outside Surface
N,261,OR2,149.63           ! Outside Surface
N,258,OR2,148.06
N,980,IR,149.38
N,981,11.755,149.38
N,982,IR2,149.38
N,983,12.317,149.38
N,984,OR2,149.38
N,990,OR2,146.68
FILL,240,990,1,251
NGEN,2,5,980,984,1,,-0.66
FILL,246,258,1,257
FILL,253,255,1,,1,3,3
FILL,237,990,1,991

/COM **** COLLAR AT BOTTOM EDGE OF PLUG (.155" above Sealing Surface) ****
NGEN,2,3,259,,,,0.245      ! Nodes 262
```

```
/COM **** COLLAR AT TOP EDGE OF PLUG (2" above bottom Edge) ****
NGEN,2,9,262,,,,2.00          ! Nodes 271
FILL,262,271,2

/COM **** COLLAR AT BASE OF THREADS ****
N,274,IR3,152.00
N,1000,IR2,152.00

/COM **** TOP TO COLLAR (WELD CLOSURE) ****
N,295,IR3,156.00
FILL,274,295
NGEN,3,1,259,295,3,(OR2-IR2)/2
NGEN,3,1,274,295,3,(OR2-IR3)/2

/COM ************ LOCKING & LIFTING RING GEOMETRY **************
RING1=7.94
RING2=9.375
RING3=9.625
RING4=10.19
RING5=12.23
LOCAL,11,0,,152.00            ! Local System z=0 at Base of Ring
CSYS,11

/COM **** TOP EDGE ****
N,401,RING1,6.13
CSYS,O
N,404,9.375,158.13
FILL,401,404,,,1
N,406,RING4,158.13
FILL,404,406,,,1              ! Top Edge

/COM **** LIFTING SURFACE ****
CSYS,11
N,421,RING1,5.13
N,424,RING2,5.13
FILL,421,424
N,426,RING4,5.13
FILL,424,426
FILL,401,421,1,,10,6,1
N,431,RING1,6.13-1.56
N,434,RING2,6.13-1.56
FILL

/COM **** BOLTING SURFACE ****
N,441,RING1,4
N,444,RING3,4
FILL
N,445,10.9375-.6875,4          ! Inside Edge of Bolt Hole
N,447,10.9375+.6875,4          ! Outside Edge of Bolt Hole
FILL
N,910,10.9375-.6875,4
N,911,10.9375+.6875,4
N,448,RING5,4                  ! O.D of Ring
CSYS,0                         ! Bolt Extension
N,924,10.25,152.00             ! Double Nodes @ Bolt for Gap elements
```

```
N,925,11.625,152.00
FILL,910,924,6,,2
FILL,911,925,6,,2
N,525,10.25,151.874          ! Bottom of Bolt Extension
N,527,11.625,151.874
FILL

/COM **** BOTTOM OF LIFTING/LOCKING RING ****
CSYS,11
NGEN,2,70,441,448,1,,-4      ! Bottom Surface of Lifting/Locking Ring
FILL,441,511,6,,10,8,1       ! Fill in Lifting/Locking Ring

/COM ************ SHIELD PLUG (offset y by 158.25) ************
LOCAL,20,0,,158.13
TYPE,2
PLUGR1=11.975
PLUGR2=11.45
PLUGR3=11.25
PLUGR4=7.89

/COM **** NODES AT PLUG AXIS (r=0) ****
N,601
N,602,0,-1
N,603,0,-1.994
N,606,0,-4.994
FILL,603,606,2,604
N,607,0,-6.25
N,610,0,-8.25
FILL,607,610,2,608
N,611,0,-8.75
N,613,0,-10.5
FILL,611,613

/COM **** NODAL GENERATION ****
NGEN,2,20,601,613,1,0.8825
NGEN,2,20,621,633,1,0.8825          ! Id Large Opening
NGEN,2,20,642,653,1,0.6875
NGEN,2,20,662,673,1,0.6875          ! Id Medium Opening
NGEN,2,20,683,693,1,0.4235          ! Id Small Opening
NGEN,2,10,706,713,1,0.9515          ! Center of Opening

N,730,5.4665,-1.994                 ! Od Small Opening
N,736,5.4665,-4.994
FILL,730,736,5,731
N,737,5.4665,-6.25
N,740,5.4665,-8.25
FILL,737,740,2,738
N,741,5.4665,-8.75
N,743,5.4665,-10.5
FILL,741,743
N,748,5.89,-1.0
NGEN,2,20,730,743,1,0.4235
FILL,748,750
N,766,7.265,0
NGEN,2,20,748,763,1,1.375
FILL,766,768
```

```
NGEN,3,20,766,768,1,0.3125
N,789,7.5775,-1.56
N,796,7.5775,-5.56
FILL,789,796,6
NGEN,2,20,789,796,1,0.3125
NGEN,3,20,777,783,1,0.3125

/COM **** UNDER LOCKING RING ****
N,824,8.5017,-6.25
N,827,8.5017,-8.25
FILL
N,828,8.5017,-8.75
N,830,8.5017,-10.5
FILL
NGEN,3,7,824,830,1,0.5616
NGEN,2,7,838,844,1,0.625
NGEN,2,7,845,851,1,0.6875      ! Under Bolt
N,859,11.625,-6.25
N,860,11.625,-6.917
N,861,11.625,-7.584
N,862,PLUGR2,-8.25
N,863,PLUGR2,-8.75
N,865,PLUGR3,-10.5
FILL,863,865,1
N,866,PLUGR1-0.288,-6.25
N,869,PLUGR1-0.288,-8.25
FILL,866,869,2
N,870,PLUGR1-0.288,-8.476
NGEN,2,5,866,870,1,0.288

/COM **** REFINING LIFTING EAR ****
CSYS,0
N,877,9.53,158.13
N,889,9.53,157.63
N,901,9.53,157.13
FILL,403,404,1,876
FILL,413,414,1,888
FILL,423,424,1,900
FILL,877,405,1,878
FILL,405,406,2,879,1
FILL,889,415,1,890
FILL,415,416,2,891,1
FILL,404,414,1,881
FILL,877,889,1,882
FILL,878,890,1,883
FILL,405,415,1,884
FILL,879,891,1,885
FILL,880,892,1,886
FILL,406,416,1,887
FILL,889,901,1,894
FILL,414,424,1,893
FILL,901,425,1,902
FILL,890,902,1,895
FILL,415,425,1,896
FILL,425,426,2,903,1
FILL,891,903,1,897
```

```
FILL,892,904,1,898
FILL,416,426,1,899
FILL,424,434,1,907
FILL,433,434,1,908
FILL,423,433,1,905
FILL,905,907

/COM **** LIFTING CAP ****
N,1001,0.125,161.167
N,1002,0.125,160.12
NGEN,2,5,1001,1002,,0.392
N,1003,0.517,162.471
N,1004,0.517,161.9185
N,1005,0.517,161.366
N,1008,1.00,163.366
NGEN,2,6,1003,1007,,0.483
N,1014,1.25,163.616
NGEN,2,7,1008,1013,,0.25
N,1021,1.9768,163.616
N,1023,1.9768,162.616
FILL
N,1024,1.9768,162.056
N,1025,1.9768,161.49
N,1027,1.9768,160.12
FILL,1025,1027
NGEN,7,10,1021,1027,,0.9884
NGEN,2,10,1081,1087,,0.9888
N,1101,RING2,163.616
N,1103,RING2,162.616
FILL
N,1104,RING2,162.056
N,1105,RING2,161.49
N,1107,RING2,160.12
FILL
N,1108,RING2,160.088
N,1112,RING4,163.616
N,1114,RING4,162.616
FILL
FILL,1101,1112,1,1109
FILL,1102,1113,1,1110
FILL,1103,1114,1,1111
N,1120,RING3,161.49
N,1122,RING3,160.12
FILL
NGEN,2,3,1120,1122,,0.629
NGEN,2,3,1123,1125,,0.614
NGEN,2,3,1126,1128,,0.636
NGEN,2,3,1129,1131,,0.621
N,1138,OR2,161.49
N,1140,OR2,160.12
FILL
FILL,1132,1138,1,1135
FILL,1133,1139,1,1136
FILL,1134,1140,1,1137
N,1141,12.125,159.78
N,1143,OR2,159.78
```

```
FILL
NGEN,3,3,1141,1143,,,-0.47
NGEN,2,3,1147,1150,,,-0.53
NGEN,2,3,1150,1152,,,-0.60
NGEN,2,3,1153,1155,,,-0.54
NGEN,2,3,1156,1158,,,-0.38
NGEN,2,3,1159,1161,,,-0.41
N,1168,RING3,160.032
N,1169,10.254,159.78
N,1170,10.868,159.78
N,1171,11.504,159.78
N,1172,10.868,159.31
N,1173,11.504,159.31
N,1174,11.24,158.84
N,1175,11.504,158.84
N,1176,11.504,158.31
N,1177,11.71,157.71
N,1178,11.896,157.17
N,1179,12.027,156.79
/COM **** END LIFTING CAP ****

/COM **** FILTER GUARD PLATE ****
PLATE1=0.273
PLATE2=0.6575
PLATE3=1.357
PLATE4=10.25
PLATE5=11.25

N,1200,PLATE4,146.78
N,1202,PLATE5,146.78
FILL
NGEN,5,3,1200,1202,,,-0.85
NGEN,2,3,1212,1214,,,-0.25
N,1221,PLATE4,141.88
N,1222,10.75,141.88
N,1223,10.915,141.88
FILL,1215,1221,1,1218
FILL,1223,1217,1,1220
FILL,1216,1222,1,1219
N,1237,6.4375,143.38
FILL,1212,1237,3,1225,4
N,1249,3.578,143.38
FILL,1237,1249,2,1241,4
NGEN,2,1,1225,1249,4,,-0.25
NGEN,2,2,1226,1250,4,,-1.25
FILL,1226,1228,1,1227,,7,4
N,1253,2.625,145.255
N,1254,2.625,145.005
N,1256,2.625,143.38
FILL,1254,1256
N,1257,2.625,143.13
N,1259,2.625,141.88
FILL,1257,1259
NGEN,2,10,1253,1259,1,-0.5
NGEN,2,10,1263,1269,1,-0.768
N,1283,0.6575,145.255
```

```
N,1284,0.6575,145.005
N,1260,2.125,147.63
N,1270,1.357,147.63
N,1280,0.6575,147.63
N,1290,0.273,147.63
NGEN,3,1,1260,1290,10,,-0.5625

/COM **** NODES FOR GAP ELEMENTS ATOP CAP ****
NGEN,2,1000,1014,,,,1.00
NGEN,2,1000,1021,1101,10,,1.00
NGEN,2,1000,1109,1112,3,,1.00

/COM **** COUPLING NODES ****
/COM **** BETWEEN LIFTING/LOCKING RING & SHELL ****
CP,1,UY,508,277              ! Start Threads
CP,2,UY,498,280
CP,3,UY,488,283
CP,4,UY,478,286
CP,5,UY,468,289
CP,6,UY,458,292

/COM **** BETWEEN BOLT & LOCKING RING ****
CP,7,UY,445,910
CP,8,UX,445,910
CP,9,UY,447,911
CP,10,UX,447,911
*DO,I,1,7
CP,10+I,UY,445+10*I,910+2*I
*ENDDO
*DO,I,1,7
CP,17+I,UY,447+10*I,911+2*I
*ENDDO
*DO,I,1,7
CP,24+I,UX,445+10*I,910+2*I
*ENDDO
*DO,I,1,7
CP,31+I,UX,447+10*I,911+2*I
*ENDDO
NALL
EALL

/COM **** ELEMENT GENERATION FOR SHELL ****
TYPE,1
MAT,1

/COM **** BOTTOM OF SHELL ****
E,1,2,22,21
E,2,3,23,22
EGEN,8,1,-1
E,10,11,30
E,21,22,42,41
E,22,23,43,42
EGEN,10,1,-1
E,11,31,30
E,11,32,31
```

```
/COM **** SHELL ****
E,50,51,54,53
EGEN,2,1,-1
EGEN,5,3,-2

/COM **** FIRST TRANSITION ELEMENTS ****
E,65,66,100
E,100,66,101
E,67,101,66

/COM **** SINGLE SHELL ****
E,100,101,103,102
EGEN,40,2,-1

/COM **** SECOND TRANSITION ELEMENTS ****
E,190,180,191
E,180,181,191
E,181,192,191

/COM **** TOP SHELL (DOUBLE ELEMENT) ****
E,190,191,194,193
EGEN,2,1,-1
EGEN,18,3,-2
E,244,245,986,985
EGEN,2,1,-1
E,256,257,988,987
E,257,258,989,988
E,985,986,981,980
EGEN,4,1,-1
E,980,981,248,247
EGEN,2,1,-1
E,982,983,260,249
E,983,984,261,260

/COM **** COLLAR TRANSITION & THREADED REGIONS ****
E,237,991,251,240
E,991,990,251
E,240,251,254,253
E,251,990,255,254
E,253,254,257,256
EGEN,2,1,-1
E,259,260,263,262
EGEN,2,1,-1
EGEN,12,3,-2
E,271,274,1000

/COM **** MERGE COINCIDENT NODES FOR SHELL ****
ESEL,S,TYPE,,1
NSLE
NUMMRG,NODE,
EALL
NALL
/COM **** END OF SHELL/COLLAR ELEMENT GENERATION ****

/COM **** LOCKING/LIFTING RING ELEMENTS ****
TYPE,3
```

```
MAT,1
E,411,412,402,401
EGEN,2,1,-1
EGEN,2,10,-2
E,413,888,876,403
E,881,404,876
E,888,881,876
E,888,414,881
E,881,882,877,404
E,414,889,882,881
E,882,883,878,877
E,889,890,883,882
E,883,884,405,878
E,890,415,884,883
E,884,885,879,405
E,415,891,885,884
E,885,886,880,879
E,891,892,886,885
E,886,887,406,880
E,892,416,887,886
E,423,900,888,413
E,893,414,888
E,900,893,888
E,900,424,893
E,893,894,889,414
E,424,901,894,893
E,894,895,890,889
E,901,902,895,894
E,895,896,415,890
E,902,425,896,895
E,896,897,891,415
E,425,903,897,896
E,897,898,892,891
E,903,904,898,897
E,898,899,416,892
E,904,426,899,898
E,431,432,422,421
E,905,423,422
E,432,905,422
E,432,433,905
E,905,906,900,423
E,433,908,906,905
E,906,907,424,900
E,908,434,907,906
E,441,442,432,431
EGEN,2,1,-1
E,443,908,433
E,443,444,434,908
E,451,452,442,441
EGEN,3,1,-1
EGEN,7,10,-3
E,454,912,910,444
E,464,914,912,454
E,474,916,914,464
E,484,918,916,474
E,494,920,918,484
```

```
E,504,922,920,494
E,514,924,922,504
E,458,448,911,913
E,468,458,913,915
E,478,468,915,917
E,488,478,917,919
E,498,488,919,921
E,508,498,921,923
E,518,508,923,925

/COM **** BOLT ****
TYPE,5
MAT,5
E,455,456,446,445
EGEN,8,10,-1
E,456,457,447,446
EGEN,8,10,-1
/COM ********** END OF LOCKING/LIFTING RING **********

/COM **** SHIELD PLUG ELEMENTS ****
TYPE,2
MAT,1
E,602,622,621,601
EGEN,11,1,-1
EGEN,2,20,-11
E,613,1290,612
E,1290,1280,632,612
E,1280,633,632
E,633,1270,632
E,1270,652,632
E,1270,653,652
E,643,663,662,642
EGEN,10,1,-1
EGEN,2,20,-10
E,673,693,692,672
EGEN,2,20,-10
E,653,1260,652
E,1260,672,652
E,1260,673,672
E,707,717,716,706
EGEN,7,1,-1
E,717,737,736,716
EGEN,7,1,-1
E,731,751,750,730
EGEN,13,1,-1
E,749,769,768,748
EGEN,15,1,-1
E,767,787,786,766
EGEN,17,1,-1
EGEN,2,20,-17
E,818,825,824,817
EGEN,6,1,-1
EGEN,5,7,-6
E,853,860,859,852
EGEN,6,1,-1
E,860,867,866,859
```

```
EGEN,3,1,-1
E,867,872,871,866
EGEN,4,1,-1
/COM ************ END OF SHIELD PLUG ************

/COM ************ LIFTING CAP ************
TYPE,1
MAT,1
E,1001,1006,1005
E,1002,1007,1006,1001
E,1004,1010,1009,1003
EGEN,4,1,-1
E,1009,1016,1015,1008
EGEN,5,1,-1
EGEN,2,7,-5
E,1015,1022,1021,1014
E,1022,1032,1031,1021
EGEN,6,1,-1
EGEN,8,10,-6
E,1102,1110,1109,1101
EGEN,2,1,-1
E,1110,1113,1112,1109
EGEN,2,1,-1
E,1105,1120,1104
E,1106,1121,1120,1105
EGEN,2,1,-1
E,1121,1124,1123,1120
EGEN,2,1,-1
EGEN,6,3,-2
E,1141,1142,1137,1134
E,1142,1143,1140,1137
E,1144,1145,1142,1141
EGEN,2,1,-1
EGEN,7,3,-2
E,295,296,1163,1162
E,296,297,1164,1163
E,1108,1107,1097
E,1108,1168,1122,1107
E,1168,1169,1125,1122
E,1169,1170,1128,1125
E,1170,1171,1131,1128
E,1171,1141,1134,1131
E,1172,1170,1169
E,1172,1173,1171,1170
E,1173,1144,1141,1171
E,1174,1175,1173,1172
E,1175,1147,1144,1173
E,1176,1175,1174
E,1176,1150,1147,1175
E,1177,1153,1150,1176
E,1178,1156,1153,1177
E,1179,1159,1156,1178
E,1162,1159,1179
/COM ************ END OF LIFTING CAP ************

/COM ************ FILTER GUARD PLATE ************
```

```
E,1200,1201,858,851
E,1201,1202,865,858
E,1203,1204,1201,1200
EGEN,2,1,-1
EGEN,6,3,-2
E,1221,1222,1219,1218
E,1222,1223,1220,1219
E,1226,1215,1212,1225
E,1227,1218,1215,1226
E,1228,1221,1218,1227
E,1230,1226,1225,1229
EGEN,3,1,-1
EGEN,6,4,-3
E,1257,1250,1249,1256
EGEN,3,1,-1
E,1264,1254,1253,1263
EGEN,6,1,-1
E,1271,1261,1260,1270
EGEN,9,1,-1
E,1281,1271,1270,1280
EGEN,4,1,-1
E,1291,1281,1280,1290
EGEN,2,1,-1

/COM ************ CONTACT ELEMENTS ************
/COM **** BETWEEN LOCKING RING & SHIELD PLUG ****
TYPE,4
REAL,4
E,806,401
E,807,411
E,808,421
E,809,431
E,810,441
E,811,451
E,812,461
E,813,471
E,814,481
E,815,491
E,816,501
E,817,511

/COM **** BETWEEN SHIELD PLUG & BOTTOM OF BOLT
REAL,5
E,845,525
E,852,526
E,859,527

/COM **** BETWEEN SHIELD PLUG & SHELL (ABOVE SEAL)
REAL,4
E,871,271
E,872,268
E,873,265
E,874,262

/COM **** BETWEEN SHIELD PLUG & SHELL (BELOW SEAL)
E,863,980
```

```
/COM **** BETWEEN SHIELD PLUG AND SEAL LIP
TYPE,4
REAL,6
E,247,862
E,248,870
E,249,875

TYPE,4
REAL,8
E,247,862
E,248,869

/COM **** ABOVE LIFTING CAP ****
TYPE,4
REAL,7
E,1014,2014
E,1021,2021
EGEN,9,10,-1
E,1109,2109
EGEN,2,3,-1
/COM ************* END GAP ELEMENTS **************

/COM ************* BOUNDARY CONDITIONS **************
CSYS,0
NSEL,S,LOC,X,0
NSEL,R,LOC,Y,-1.33,163.50
D,ALL,UX,0
NALL
EALL
NSEL,S,NODE,,1002
D,ALL,UX,0
NALL
EALL
NSEL,S,NODE,,2021,2101,10
NSEL,A,NODE,,2109,2112,3
NSEL,A,NODE,,2014
D,ALL,ALL,0
EALL
NALL
SAVE

/COM **** LOAD 1: 150 PSI INTERNAL PRESSURE ****
NSEL,S,LOC,X,0,1.26          ! Bottom Plate
NSEL,R,LOC,Y,-0.45,-0.43
SF,ALL,PRES,150
NALL
EALL
NSEL,S,LOC,X,1.24,2.14
NSEL,R,LOC,Y,-0.45,0.45
SF,ALL,PRES,150
NALL
EALL
NSEL,S,LOC,X,2.12,11.51
NSEL,R,LOC,Y,0.43,0.45
SF,ALL,PRES,150
```

```
NALL
EALL
NSEL,S,LOC,X,11.49,11.51      ! Inside Shell
NSEL,R,LOC,Y,0.43,149.64
SF,ALL,PRES,150
NALL
EALL
NSEL,S,LOC,X,11.49,11.76      ! Edge Shell to Seal
NSEL,R,LOC,Y,149.62,149.64
SF,ALL,PRES,150
NALL
EALL
NSEL,S,LOC,X,11.67,11.69      ! Seal
NSEL,R,LOC,Y,149.64,149.89
SF,ALL,PRES,150
NALL
EALL
NSEL,S,LOC,X,11.44,11.69      ! Shield Plug (above seal)
NSEL,R,LOC,Y,149.87,149.89
SF,ALL,PRES,150
NALL
EALL
NSEL,S,LOC,X,11.44,11.46      ! Side of Shield Plug
NSEL,R,LOC,Y,149.37,149.89
SF,ALL,PRES,150
NALL
EALL
NSEL,S,LOC,X,11.24,11.46      ! Shield Plug Taper
NSEL,R,LOC,Y,147.62,149.39
SF,ALL,PRES,150
NALL
EALL
NSEL,S,LOC,X,11.24,11.26      ! Guard Plate Ring
NSEL,R,LOC,Y,143.12,147.64
SF,ALL,PRES,150
NALL
EALL
NSEL,S,LOC,X,10.914,11.26     ! Guard Plate Taper
NSEL,R,LOC,Y,141.87,143.14
SF,ALL,PRES,150
NALL
EALL
NSEL,S,LOC,X,1.34,10.92       ! Guard Plate Bottom
NSEL,R,LOC,Y,141.87,141.89
SF,ALL,PRES,150
NALL
EALL
SAVE

/COM **** LOAD 2: APPLYING PRESSURE GRADIENT (BASKETS) ************
NSEL,S,NODE,,164,166,2
SF,ALL,PRES,517.57            ! Bottom of Top Basket
SFCUM,PRES,ADD
NALL
EALL
NSEL,S,NODE,,166,168,2
```

```
SF,ALL,PRES,528.43
SFCUM,PRES,ADD
NALL
EALL
NSEL,S,NODE,,168,170,2
SF,ALL,PRES,538.89
SFCUM,PRES,ADD
NALL
EALL
NSEL,S,NODE,,170,172,2
SF,ALL,PRES,548.99
SFCUM,PRES,ADD
NALL
EALL
NSEL,S,NODE,,172,174,2
SF,ALL,PRES,558.73
SFCUM,PRES,ADD
NALL
EALL
NSEL,S,NODE,,174,176,2
SF,ALL,PRES,568.13
SFCUM,PRES,ADD
NALL
EALL
NSEL,S,NODE,,176,178,2
SF,ALL,PRES,577.21
SFCUM,PRES,ADD
NALL
EALL
NSEL,S,NODE,,178,180,2
SF,ALL,PRES,585.93
SFCUM,PRES,ADD
NALL
EALL
NSEL,S,NODE,,180,190,10
SF,ALL,PRES,587.75
SFCUM,PRES,ADD
NALL
EALL
NSEL,S,NODE,,190,193,3
SF,ALL,PRES,589.97
SFCUM,PRES,ADD
NALL
EALL
NSEL,S,NODE,,193,196,3
SF,ALL,PRES,592.19
SFCUM,PRES,ADD
NALL
EALL
NSEL,S,NODE,,196,199,3
SF,ALL,PRES,594.42
SFCUM,PRES,ADD
NALL
EALL
NSEL,S,NODE,,199,202,3
SF,ALL,PRES,596.64
```

```
SFCUM,PRES,ADD
NALL
EALL
NSEL,S,NODE,,202,205,3
SF,ALL,PRES,598.90
SFCUM,PRES,ADD
NALL
EALL
NSEL,S,NODE,,205,208,3
SF,ALL,PRES,601.13
SFCUM,PRES,ADD
NALL
EALL
NSEL,S,NODE,,208,211,3
SF,ALL,PRES,603.35
SFCUM,PRES,ADD
NALL
EALL
NSEL,S,NODE,,211,214,3
SF,ALL,PRES,605.60
SFCUM,PRES,ADD
NALL
EALL
NSEL,S,LOC,X,1.3565,10.9155
NSEL,R,LOC,Y,141.87,141.89
SF,ALL,PRES,1244.82          ! Vertical Pressure from 5 Baskets
SFCUM,PRES,ADD               ! at 28 g's
NALL
EALL
SAVE

/COM **** LOAD 3: APPLYING 28g ACCELERATION ****
ACEL,,-28                    ! Impose 28 g Acceleration Top Drop
SAVE
FINI

/COM ***************        SOLUTION PHASE        **************
/SOLUTION
SOLVE
SAVE
FINI

/COM **** POSTPROCESSING ****
/POST1
SET,LAST
/TYPE,ALL,HIDC
/GLINE,ALL,0
RSYS,0
PLNSOL,S,INT
/DSCALE,,20
/REPLOT
NSEL,S,LOC,X,11.49,11.51
NSEL,R,LOC,Y,-0.33,149.63
PRNS,U,X
NALL
EALL
```

```
NSEL,S,LOC,X,1.356,11.26
NSEL,R,LOC,Y,141.87,143.39
PRNS,U,Y
NALL
EALL
LPATH,1,41
PRSECT
LPATH,4,44
PRSECT
LPATH,6,46
PRSECT
LPATH,9,49
PRSECT
LPATH,10,50
PRSECT
LPATH,50,52
PRSECT
LPATH,53,55
PRSECT
LPATH,62,64
PRSECT
LPATH,65,67
PRSECT
LPATH,100,101
PRSECT
LPATH,122,123
PRSECT
LPATH,134,135
PRSECT
LPATH,156,157
PRSECT
LPATH,170,171
PRSECT
LPATH,180,181
PRSECT
LPATH,202,204
PRSECT
LPATH,235,237
PRSECT
LPATH,985,989
PRSECT
LPATH,262,264
PRSECT
LPATH,277,279
PRSECT
LPATH,292,294
PRSECT
LPATH,601,641
PRSECT
LPATH,601,613
PRSECT
LPATH,603,703
PRSECT
LPATH,606,706
PRSECT
LPATH,766,806
```

```
PRSECT
LPATH,748,808
PRSECT
LPATH,736,815
PRSECT
LPATH,862,873
PRSECT
LPATH,869,874
PRSECT
LPATH,870,875
PRSECT
LPATH,1200,1202
PRSECT
LPATH,1209,1211
PRSECT
LPATH,1229,1232
PRSECT
LPATH,1237,1240
PRSECT
LPATH,1245,1248
PRSECT
LPATH,1284,1263
PRSECT
LPATH,1261,1291
PRSECT
LPATH,431,434
PRSECT
LPATH,406,426
PRSECT
LPATH,404,424
PRSECT
LPATH,1120,1097
PRSECT
LPATH,1120,1168
PRSECT
LPATH,1174,1149
PRSECT
LPATH,1176,1152
PRSECT
LPATH,1177,1155
PRSECT
LPATH,1178,1158
PRSECT
LPATH,1179,1161
PRSECT
LPATH,1162,1164
PRSECT
LPATH,295,297
PRSECT
LPATH,1021,1027
PRSECT
LPATH,1071,1077
PRSECT
LPATH,1138,1169
PRSECT
SAVE
```

COMPUTER RUN COVER SHEET

Project Number:	KH-8009-8
Computer Code:	ANSYS®-PC
Software Version:	5.0A
Computer System:	MS-DOS, Pentium® Processor
Computer Run File Number:	KH-8009-8-03
Unique Computer Run Filename:	TEDMC.out
Run Description:	MCO Top End Drop with Lifting Cap
Run Date / Time:	30 March 1997 11:16:18 AM

Prepared By: Zachary G. Sargent Date 4/18/97

Checked By: Joe Nichols Date 4/17/97

COMPUTER RUN COVER SHEET

Project Number:	KH-8009-8
Computer Code:	ANSYS®-PC
Software Version:	5.0A
Computer System:	MS-DOS, Pentium® Processor
Computer Run File Number:	KH-8009-8-03
Unique Computer Run Filename:	TED.inp
Run Description:	MCO Top End Drop without Lifting Cap
Creation Date / Time:	30 March 1997 10:54:30 AM

Prepared By: Zachary G. Sargent Date 4/18/97

Checked By: Joe Nichols Date 4/17/97

LISTING OF TED.INP FILE

```
/BATCH,LIST
/FILENAM,TED
/PREP7
/TITLE,MCO DESIGN- 132 DEGREES C, 150 psi, 28 g TOP END DROP W/O CAP

TREF,70
TUNIF,270
ETAN=0.006              ! Tangent modulus


/COM **** ELEMENT TYPES ****
ET,1,42,,,1             ! Shell
ET,2,42,,,1             ! Shield Plug
ET,3,42,,,1             ! Lifting & Locking Ring
ET,4,12                 ! Gap Elements Between Shield Plug & Shell
KEYOPT,4,7,1
ET,5,42,,,1             ! Bolt

/COM **** REAL CONSTANTS FOR GAP ELEMENTS ****
R,4,-90,1.0E8,-0.06,3.0     ! Shell/Shield Plug, Initially Open .06"
R,5,0,1.0E8,2.95e-03        ! L. Ring/Shield Plug, Under Bolt, Preloaded
R,6,0,1.0E8,0,2.0           ! Sealing Surface, closed
R,7,0,1.0E8,0,1.0           ! Anchoring for drop, closed
R,8,0,2.42e7,,2.0           ! Seal Spring, Max Stiffness

/COM ************** MATERIAL PROPERTIES **************
MP,DENS,1,490/1728          ! 304L SS
MP,NUXY,1,0.3

MP,DENS,5,490/1728          ! SA193 Grade B8M
MP,NUXY,5,0.3

TB,BKIN,1,6             ! Yield Stress & Tangent Moduli v. Temp.
TBTEMP,100
TBDATA,1,25000,ETAN*28.1E+06
TBTEMP,200
TBDATA,1,21300,ETAN*27.6E+06
TBTEMP,300
TBDATA,1,19100,ETAN*27.0E+06
TBTEMP,400
TBDATA,1,17500,ETAN*26.5E+06
TBTEMP,500
TBDATA,1,16300,ETAN*25.8E+06
TBTEMP,600
TBDATA,1,15500,ETAN*25.3E+06


/COM **** DEFINING TEMPERATURES FOR MPDATA ****
MPTEMP,1, 70,100,200,300,400,500
MPTEMP,7,600,650,700,750

/COM **** DEFINING ELASTIC MODULI FOR 304L & SA-193 ****
MPDATA,EX,1,1,28.3e+06,28.1e+06,27.6e+06,27.0e+06,26.5e+06,25.8e+06
```

```
MPDATA,EX,1,7,25.3e+06,25.1e+06,24.8e+06,24.5e+06
/COM                    ! SA-193
MPDATA,EX,5,1,28.3e+06,28.1e+06,27.6e+06,27.0e+06,26.5e+06,25.8e+06
MPDATA,EX,5,7,25.3e+06,25.1e+06,24.8e+06,24.5e+06

/COM **** MEAN COEFFICIENTS OF THERMAL EXPANSION (in./in./(F) ****
! SA240 Gr 304L
MPDATA,ALPX,1,1,0,8.55e-06,8.79e-06,9.00e-06,9.19e-06,9.37e-06
MPDATA,ALPX,1,7,9.53e-06,9.61e-06,9.69e-06,9.76e-06

! SA193 Gr B8M
MPDATA,ALPX,5,1,0,8.54e-06,8.76e-06,8.97e-06,9.21e-06,9.42e-06
MPDATA,ALPX,5,7,9.60e-06,9.69e-06,9.76e-06,9.81e-06

/COM ************* SHELL GEOMETRY *****************
IR=11.5                 ! Internal Shell Radius @ Bottom
OR=12.000               ! Shell Outside Radius @ Bottom
IR2 = 12.02             ! Inside Radius at Collar Sealing Surface
OR2 = 12.625            ! Outside Radius at Collar Sealing Surface
IR3 = 12.25             ! Inside Radius at Collar-Lifting Ring Weld

/COM **** BOTTOM COVER PLATE  [DWG SK-2-300378] ****
N,1,,-1.32              ! Row 1
N,2,1.25,-1.32
N,3,2.13,-1.32
N,10,11.423,-1.32
FILL

N,41,0.00,-0.44         ! Row 3
N,42,1.25,-0.44
N,43,2.13,0.44
N,50,IR,0.44
FILL,43,50
N,52,OR,0.44
FILL,50,52

FILL,1,41,1,21,1,10     ! Middle Row
FILL,10,50,1,30
N,32,12,-0.32
FILL,30,32
FILL,10,32,1,11
N,53,IR,1.17
N,55,OR,1.17            ! Shell Stub/Weld
FILL,53,55

/COM **** SHELL [DWGS SK-2-300379 & SK-2-300461] ****
N,65,IR,6.68
N,67,OR,6.68
FILL
FILL,53,65,3,,3,3,1

/COM **** SINGLE ROW SHELL ****
N,100,IR,7.18           ! Inside
N,140,IR,71.68
N,180,IR,136.68
```

```
N,101,OR,7.18              ! Outside
N,141,OR,71.68
N,181,OR,136.68
FILL,100,140,20,,2,2,1,2.0
FILL,140,180,19,,2,2,1,.5

/COM **** DOUBLE ROW SHELL ****
N,190,IR,137.18            ! Transition to Double Row
N,192,OR,137.18
FILL

/COM **** BASE OF CASK THROAT--ELEVATION: 138 INCHES ****
N,217,IR,142.68            ! Transition to Double Row
N,219,OR,142.68
FILL
FILL,190,217,8,,3,3,1      ! Vertical Fill

/COM **** BOTTOM OF COLLAR TRANSITION ****
N,235,IR,146.06            ! Start of Transition to Large O.D &
N,237,OR,146.06            ! Assumed Location of Shield Plug Taper
FILL
N,238,IR,146.68
N,240,OR,146.68
FILL                ! Horizontal Fill
FILL,217,235,5,,3,3,1      ! Vertical Fill

/COM **** TOP OF COLLAR TRANSITION ****
N,241,IR,147.31            ! End of Transition to Large O.D &
N,243,OR,147.31            ! Assumed Location of Shield Plug Taper
FILL                ! Horizontal Fill
NGEN,2,3,241,243,1,,0.75

/COM **** COLLAR SEALING SURFACE ****
N,247,IR,149.63            ! Inside Radius of Sealing Surface
N,249,IR2,149.63           ! Outside Radius at Sealing Surface
FILL                ! Horizontal Fill

/COM **** THICK WALL AT COLLAR TRANSITION ****
NGEN,2,10,240,249,3        ! Nodes 250-259 Coincident w/240-249 (by 3)
N,255,OR2,147.31           ! Outside Surface
N,261,OR2,149.63           ! Outside Surface
N,258,OR2,148.06
N,980,IR,149.38
N,981,11.755,149.38
N,982,IR2,149.38
N,983,12.317,149.38
N,984,OR2,149.38
N,990,OR2,146.68
FILL,240,990,1,251
NGEN,2,5,980,984,1,,-0.66
FILL,246,258,1,257
FILL,253,255,1,,1,3,3
FILL,237,990,1,991

/COM **** COLLAR AT BOTTOM EDGE OF PLUG (.155" above Sealing Surface) ****
NGEN,2,3,259,,,,0.245      ! Nodes 262
```

```
/COM **** COLLAR AT TOP EDGE OF PLUG (2" above bottom Edge) ****
NGEN,2,9,262,,,,2.00          ! Nodes 271
FILL,262,271,2

/COM **** COLLAR AT BASE OF THREADS ****
N,274,IR3,152.00
N,1000,IR2,152.00

/COM **** TOP TO COLLAR (WELD CLOSURE) ****
N,295,IR3,156.00
FILL,274,295
NGEN,3,1,259,295,3,(OR2-IR2)/2
NGEN,3,1,274,295,3,(OR2-IR3)/2

/COM ************ LOCKING & LIFTING RING GEOMETRY **************
RING1=7.94
RING2=9.375
RING3=9.625
RING4=10.19
RING5=12.23
LOCAL,11,0,,152.00            ! Local System z=0 at Base of Ring
CSYS,11

/COM **** TOP EDGE ****
N,401,RING1,6.13
CSYS,O
N,404,9.375,158.13
FILL,401,404,,,1
N,406,RING4,158.13
FILL,404,406,,,1              ! Top Edge

/COM **** LIFTING SURFACE ****
CSYS,11
N,421,RING1,5.13
N,424,RING2,5.13
FILL,421,424
N,426,RING4,5.13
FILL,424,426
FILL,401,421,1,,10,6,1
N,431,RING1,6.13-1.56
N,434,RING2,6.13-1.56
FILL

/COM **** BOLTING SURFACE ****
N,441,RING1,4
N,444,RING3,4
FILL
N,445,10.9375-.6875,4          ! Inside Edge of Bolt Hole
N,447,10.9375+.6875,4          ! Outside Edge of Bolt Hole
FILL
N,910,10.9375-.6875,4
N,911,10.9375+.6875,4
N,448,RING5,4                  ! O.D of Ring
CSYS,0                         ! Bolt Extension
N,924,10.25,152.00             ! Double Nodes @ Bolt for Gap elements
```

```
N,925,11.625,152.00
FILL,910,924,6,,2
FILL,911,925,6,,2
N,525,10.25,151.874          ! Bottom of Bolt Extension
N,527,11.625,151.874
FILL

/COM **** BOTTOM OF LIFTING/LOCKING RING ****
CSYS,11
NGEN,2,70,441,448,1,,-4      ! Bottom Surface of Lifting/Locking Ring
FILL,441,511,6,,10,8,1       ! Fill in Lifting/Locking Ring

/COM ************ SHIELD PLUG (offset y by 158.25) *************
LOCAL,20,0,,158.13
TYPE,2
PLUGR1=11.975
PLUGR2=11.45
PLUGR3=11.25
PLUGR4=7.89

/COM **** NODES AT PLUG AXIS (r=0) ****
N,601
N,602,0,-1
N,603,0,-1.994
N,606,0,-4.994
FILL,603,606,2,604
N,607,0,-6.25
N,610,0,-8.25
FILL,607,610,2,608
N,611,0,-8.75
N,613,0,-10.5
FILL,611,613

/COM **** NODAL GENERATION ****
NGEN,2,20,601,613,1,0.8825
NGEN,2,20,621,633,1,0.8825          ! Id Large Opening
NGEN,2,20,642,653,1,0.6875
NGEN,2,20,662,673,1,0.6875          ! Id Medium Opening
NGEN,2,20,683,693,1,0.4235          ! Id Small Opening
NGEN,2,10,706,713,1,0.9515          ! Center of Opening

N,730,5.4665,-1.994                 ! Od Small Opening
N,736,5.4665,-4.994
FILL,730,736,5,731
N,737,5.4665,-6.25
N,740,5.4665,-8.25
FILL,737,740,2,738
N,741,5.4665,-8.75
N,743,5.4665,-10.5
FILL,741,743
N,748,5.89,-1.0
NGEN,2,20,730,743,1,0.4235
FILL,748,750
N,766,7.265,0
NGEN,2,20,748,763,1,1.375
FILL,766,768
```

```
NGEN,3,20,766,768,1,0.3125
N,789,7.5775,-1.56
N,796,7.5775,-5.56
FILL,789,796,6
NGEN,2,20,789,796,1,0.3125
NGEN,3,20,777,783,1,0.3125

/COM **** UNDER LOCKING RING ****
N,824,8.5017,-6.25
N,827,8.5017,-8.25
FILL
N,828,8.5017,-8.75
N,830,8.5017,-10.5
FILL
NGEN,3,7,824,830,1,0.5616
NGEN,2,7,838,844,1,0.625
NGEN,2,7,845,851,1,0.6875     ! Under Bolt
N,859,11.625,-6.25
N,860,11.625,-6.917
N,861,11.625,-7.584
N,862,PLUGR2,-8.25
N,863,PLUGR2,-8.75
N,865,PLUGR3,-10.5
FILL,863,865,1
N,866,PLUGR1-0.288,-6.25
N,869,PLUGR1-0.288,-8.25
FILL,866,869,2
N,870,PLUGR1-0.288,-8.476
NGEN,2,5,866,870,1,0.288

/COM **** REFINING LIFTING EAR ****
CSYS,0
N,877,9.53,158.13
N,889,9.53,157.63
N,901,9.53,157.13
FILL,403,404,1,876
FILL,413,414,1,888
FILL,423,424,1,900
FILL,877,405,1,878
FILL,405,406,2,879,1
FILL,889,415,1,890
FILL,415,416,2,891,1
FILL,404,414,1,881
FILL,877,889,1,882
FILL,878,890,1,883
FILL,405,415,1,884
FILL,879,891,1,885
FILL,880,892,1,886
FILL,406,416,1,887
FILL,889,901,1,894
FILL,414,424,1,893
FILL,901,425,1,902
FILL,890,902,1,895
FILL,415,425,1,896
FILL,425,426,2,903,1
FILL,891,903,1,897
```

```
FILL,892,904,1,898
FILL,416,426,1,899
FILL,424,434,1,907
FILL,433,434,1,908
FILL,423,433,1,905
FILL,905,907

/COM **** FILTER GUARD PLATE ****
PLATE1=0.273
PLATE2=0.6575
PLATE3=1.357
PLATE4=10.25
PLATE5=11.25

N,1200,PLATE4,146.78
N,1202,PLATE5,146.78
FILL
NGEN,5,3,1200,1202,,,-0.85
NGEN,2,3,1212,1214,,,-0.25
N,1221,PLATE4,141.88
N,1222,10.75,141.88
N,1223,10.915,141.88
FILL,1215,1221,1,1218
FILL,1223,1217,1,1220
FILL,1216,1222,1,1219
N,1237,6.4375,143.38
FILL,1212,1237,3,1225,4
N,1249,3.578,143.38
FILL,1237,1249,2,1241,4
NGEN,2,1,1225,1249,4,,-0.25
NGEN,2,2,1226,1250,4,,-1.25
FILL,1226,1228,1,1227,,7,4
N,1253,2.625,145.255
N,1254,2.625,145.005
N,1256,2.625,143.38
FILL,1254,1256
N,1257,2.625,143.13
N,1259,2.625,141.88
FILL,1257,1259
NGEN,2,10,1253,1259,1,-0.5
NGEN,2,10,1263,1269,1,-0.768
N,1283,0.6575,145.255
N,1284,0.6575,145.005
N,1260,2.125,147.63
N,1270,1.357,147.63
N,1280,0.6575,147.63
N,1290,0.273,147.63
NGEN,3,1,1260,1290,10,,-0.5625

/COM **** NODES ABOVE PLUG & RING ****
NSEL,S,LOC,X,0,10.20
NSEL,R,LOC,Y,158.12,158.14
NGEN,2,2000,ALL,,,,1.00
NALL

/COM **** COUPLING NODES ****
```

```
/COM **** BETWEEN LIFTING/LOCKING RING & SHELL ****
CP,1,UY,508,277          ! Start Threads
CP,2,UY,498,280
CP,3,UY,488,283
CP,4,UY,478,286
CP,5,UY,468,289
CP,6,UY,458,292

/COM **** BETWEEN BOLT & LOCKING RING ****
CP,7,UY,445,910
CP,8,UX,445,910
CP,9,UY,447,911
CP,10,UX,447,911
*DO,I,1,7
CP,10+I,UY,445+10*I,910+2*I
*ENDDO
*DO,I,1,7
CP,17+I,UY,447+10*I,911+2*I
*ENDDO
*DO,I,1,7
CP,24+I,UX,445+10*I,910+2*I
*ENDDO
*DO,I,1,7
CP,31+I,UX,447+10*I,911+2*I
*ENDDO
NALL
EALL

/COM **** ELEMENT GENERATION FOR SHELL ****
TYPE,1
MAT,1

/COM **** BOTTOM OF SHELL ****
E,1,2,22,21
E,2,3,23,22
EGEN,8,1,-1
E,10,11,30
E,21,22,42,41
E,22,23,43,42
EGEN,10,1,-1
E,11,31,30
E,11,32,31

/COM **** SHELL ****
E,50,51,54,53
EGEN,2,1,-1
EGEN,5,3,-2

/COM **** FIRST TRANSITION ELEMENTS ****
E,65,66,100
E,100,66,101
E,67,101,66

/COM **** SINGLE SHELL ****
E,100,101,103,102
EGEN,40,2,-1
```

```
/COM **** SECOND TRANSITION ELEMENTS ****
E,190,180,191
E,180,181,191
E,181,192,191

/COM **** TOP SHELL (DOUBLE ELEMENT) ****
E,190,191,194,193
EGEN,2,1,-1
EGEN,18,3,-2
E,244,245,986,985
EGEN,2,1,-1
E,256,257,988,987
E,257,258,989,988
E,985,986,981,980
EGEN,4,1,-1
E,980,981,248,247
EGEN,2,1,-1
E,982,983,260,249
E,983,984,261,260

/COM **** COLLAR TRANSITION & THREADED REGIONS ****
E,237,991,251,240
E,991,990,251
E,240,251,254,253
E,251,990,255,254
E,253,254,257,256
EGEN,2,1,-1
E,259,260,263,262
EGEN,2,1,-1
EGEN,12,3,-2
E,271,274,1000

/COM **** MERGE COINCIDENT NODES FOR SHELL ****
ESEL,S,TYPE,,1
NSLE
NUMMRG,NODE,
EALL
NALL
/COM **** END OF SHELL/COLLAR ELEMENT GENERATION ****

/COM **** LOCKING/LIFTING RING ELEMENTS ****
TYPE,3
MAT,1
E,411,412,402,401
EGEN,2,1,-1
EGEN,2,10,-2
E,413,888,876,403
E,881,404,876
E,888,881,876
E,888,414,881
E,881,882,877,404
E,414,889,882,881
E,882,883,878,877
E,889,890,883,882
E,883,884,405,878
```

```
E,890,415,884,883
E,884,885,879,405
E,415,891,885,884
E,885,886,880,879
E,891,892,886,885
E,886,887,406,880
E,892,416,887,886
E,423,900,888,413
E,893,414,888
E,900,893,888
E,900,424,893
E,893,894,889,414
E,424,901,894,893
E,894,895,890,889
E,901,902,895,894
E,895,896,415,890
E,902,425,896,895
E,896,897,891,415
E,425,903,897,896
E,897,898,892,891
E,903,904,898,897
E,898,899,416,892
E,904,426,899,898
E,431,432,422,421
E,905,423,422
E,432,905,422
E,432,433,905
E,905,906,900,423
E,433,908,906,905
E,906,907,424,900
E,908,434,907,906
E,441,442,432,431
EGEN,2,1,-1
E,443,908,433
E,443,444,434,908
E,451,452,442,441
EGEN,3,1,-1
EGEN,7,10,-3
E,454,912,910,444
E,464,914,912,454
E,474,916,914,464
E,484,918,916,474
E,494,920,918,484
E,504,922,920,494
E,514,924,922,504
E,458,448,911,913
E,468,458,913,915
E,478,468,915,917
E,488,478,917,919
E,498,488,919,921
E,508,498,921,923
E,518,508,923,925

/COM **** BOLT ****
TYPE,5
MAT,5
```

```
E,455,456,446,445
EGEN,8,10,-1
E,456,457,447,446
EGEN,8,10,-1
/COM ************ END OF LOCKING/LIFTING RING **************

/COM **** SHIELD PLUG ELEMENTS ****
TYPE,2
MAT,1
E,602,622,621,601
EGEN,11,1,-1
EGEN,2,20,-11
E,613,1290,612
E,1290,1280,632,612
E,1280,633,632
E,633,1270,632
E,1270,652,632
E,1270,653,652
E,643,663,662,642
EGEN,10,1,-1
EGEN,2,20,-10
E,673,693,692,672
EGEN,2,20,-10
E,653,1260,652
E,1260,672,652
E,1260,673,672
E,707,717,716,706
EGEN,7,1,-1
E,717,737,736,716
EGEN,7,1,-1
E,731,751,750,730
EGEN,13,1,-1
E,749,769,768,748
EGEN,15,1,-1
E,767,787,786,766
EGEN,17,1,-1
EGEN,2,20,-17
E,818,825,824,817
EGEN,6,1,-1
EGEN,5,7,-6
E,853,860,859,852
EGEN,6,1,-1
E,860,867,866,859
EGEN,3,1,-1
E,867,872,871,866
EGEN,4,1,-1
/COM ************ END OF SHIELD PLUG **************

/COM ************ FILTER GUARD PLATE **************
E,1200,1201,858,851
E,1201,1202,865,858
E,1203,1204,1201,1200
EGEN,2,1,-1
EGEN,6,3,-2
E,1221,1222,1219,1218
E,1222,1223,1220,1219
```

```
E,1226,1215,1212,1225
E,1227,1218,1215,1226
E,1228,1221,1218,1227
E,1230,1226,1225,1229
EGEN,3,1,-1
EGEN,6,4,-3
E,1257,1250,1249,1256
EGEN,3,1,-1
E,1264,1254,1253,1263
EGEN,6,1,-1
E,1271,1261,1260,1270
EGEN,9,1,-1
E,1281,1271,1270,1280
EGEN,4,1,-1
E,1291,1281,1280,1290
EGEN,2,1,-1

/COM ********** CONTACT ELEMENTS **********
/COM **** BETWEEN LOCKING RING & SHIELD PLUG ****
TYPE,4
REAL,4
E,806,401
E,807,411
E,808,421
E,809,431
E,810,441
E,811,451
E,812,461
E,813,471
E,814,481
E,815,491
E,816,501
E,817,511

/COM **** BETWEEN SHIELD PLUG & BOTTOM OF BOLT
REAL,5
E,845,525
E,852,526
E,859,527

/COM **** BETWEEN SHIELD PLUG & SHELL (ABOVE SEAL)
REAL,4
E,871,271
E,872,268
E,873,265
E,874,262

/COM **** BETWEEN SHIELD PLUG & SHELL (BELOW SEAL)
E,863,980

/COM **** BETWEEN SHIELD PLUG AND SEAL LIP
TYPE,4
REAL,6
E,248,870
E,249,875
```

```
TYPE,4
REAL,8
E,247,862
E,248,869

/COM **** ABOVE PLUG ****
TYPE,4
REAL,7
E,601,2601
EGEN,3,20,-1
E,766,2766
EGEN,3,20,-1
E,401,2401
EGEN,6,1,-1
E,876,2876
EGEN,5,1,-1
/COM ************* END GAP ELEMENTS *************

/COM ************* BOUNDARY CONDITIONS **************
CSYS,0
NSEL,S,LOC,X,0
NSEL,R,LOC,Y,-1.33,158.14
D,ALL,UX,0
NALL
EALL
NSEL,S,NODE,,2601,2641,20
NSEL,A,NODE,,2766,2806,20
NSEL,A,NODE,,2401,2406,1
NSEL,A,NODE,,2876,2880,1
D,ALL,ALL,0
EALL
NALL
SAVE

/COM **** LOAD 1: 150 PSI INTERNAL PRESSURE ****
NSEL,S,LOC,X,0,1.26          ! Bottom Plate
NSEL,R,LOC,Y,-0.45,-0.43
SF,ALL,PRES,150
NALL
EALL
NSEL,S,LOC,X,1.24,2.14
NSEL,R,LOC,Y,-0.45,0.45
SF,ALL,PRES,150
NALL
EALL
NSEL,S,LOC,X,2.12,11.51
NSEL,R,LOC,Y,0.43,0.45
SF,ALL,PRES,150
NALL
EALL
NSEL,S,LOC,X,11.49,11.51     ! Inside Shell
NSEL,R,LOC,Y,0.43,149.64
SF,ALL,PRES,150
NALL
EALL
NSEL,S,LOC,X,11.49,11.76     ! Edge Shell to Seal
```

```
NSEL,R,LOC,Y,149.62,149.64
SF,ALL,PRES,150
NALL
EALL
NSEL,S,LOC,X,11.67,11.69      ! Seal
NSEL,R,LOC,Y,149.64,149.89
SF,ALL,PRES,150
NALL
EALL
NSEL,S,LOC,X,11.44,11.69      ! Shield Plug (above seal)
NSEL,R,LOC,Y,149.87,149.89
SF,ALL,PRES,150
NALL
EALL
NSEL,S,LOC,X,11.44,11.46      ! Side of Shield Plug
NSEL,R,LOC,Y,149.37,149.89
SF,ALL,PRES,150
NALL
EALL
NSEL,S,LOC,X,11.24,11.46      ! Shield Plug Taper
NSEL,R,LOC,Y,147.62,149.39
SF,ALL,PRES,150
NALL
EALL
NSEL,S,LOC,X,11.24,11.26      ! Guard Plate Ring
NSEL,R,LOC,Y,143.12,147.64
SF,ALL,PRES,150
NALL
EALL
NSEL,S,LOC,X,10.914,11.26     ! Guard Plate Taper
NSEL,R,LOC,Y,141.87,143.14
SF,ALL,PRES,150
NALL
EALL
NSEL,S,LOC,X,1.34,10.92       ! Guard Plate Bottom
NSEL,R,LOC,Y,141.87,141.89
SF,ALL,PRES,150
NALL
EALL
SAVE

/COM **** LOAD 2: APPLYING PRESSURE GRADIENT (BASKETS) **************
NSEL,S,NODE,,164,166,2
SF,ALL,PRES,258.79            ! Bottom of Top Basket
SFCUM,PRES,ADD
NALL
EALL
NSEL,S,NODE,,166,168,2
SF,ALL,PRES,264.44
SFCUM,PRES,ADD
NALL
EALL
NSEL,S,NODE,,168,170,2
SF,ALL,PRES,269.67
SFCUM,PRES,ADD
NALL
```

```
EALL
NSEL,S,NODE,,170,172,2
SF,ALL,PRES,274.72
SFCUM,PRES,ADD
NALL
EALL
NSEL,S,NODE,,172,174,2
SF,ALL,PRES,279.59
SFCUM,PRES,ADD
NALL
EALL
NSEL,S,NODE,,174,176,2
SF,ALL,PRES,284.29
SFCUM,PRES,ADD
NALL
EALL
NSEL,S,NODE,,176,178,2
SF,ALL,PRES,288.83
SFCUM,PRES,ADD
NALL
EALL
NSEL,S,NODE,,178,180,2
SF,ALL,PRES,293.19
SFCUM,PRES,ADD
NALL
EALL
NSEL,S,NODE,,180,190,10
SF,ALL,PRES,294.10
SFCUM,PRES,ADD
NALL
EALL
NSEL,S,NODE,,190,193,3
SF,ALL,PRES,295.21
SFCUM,PRES,ADD
NALL
EALL
NSEL,S,NODE,,193,196,3
SF,ALL,PRES,296.32
SFCUM,PRES,ADD
NALL
EALL
NSEL,S,NODE,,196,199,3
SF,ALL,PRES,297.43
SFCUM,PRES,ADD
NALL
EALL
NSEL,S,NODE,,199,202,3
SF,ALL,PRES,298.54
SFCUM,PRES,ADD
NALL
EALL
NSEL,S,NODE,,202,205,3
SF,ALL,PRES,299.67
SFCUM,PRES,ADD
NALL
EALL
```

```
NSEL,S,NODE,,205,208,3
SF,ALL,PRES,300.79
SFCUM,PRES,ADD
NALL
EALL
NSEL,S,NODE,,208,211,3
SF,ALL,PRES,301.90
SFCUM,PRES,ADD
NALL
EALL
NSEL,S,NODE,,211,214,3
SF,ALL,PRES,303.01
SFCUM,PRES,ADD
NALL
EALL
NSEL,S,LOC,X,1.3565,10.9155
NSEL,R,LOC,Y,141.87,141.89
SF,ALL,PRES,1169.04          ! Vertical Pressure from 5 Baskets
SFCUM,PRES,ADD               ! at 28 g's
NALL
EALL
SAVE

/COM **** LOAD 3: APPLYING 28g ACCELERATION ****
ACEL,,-28                    ! Impose 28 g Acceleration Top Drop
SAVE
FINI

/COM ***************      SOLUTION PHASE      *************
/SOLUTION
SOLVE
SAVE
FINI

/COM **** POSTPROCESSING ****
/POST1
SET,LAST
/TYPE,ALL,HIDC
/GLINE,ALL,0
RSYS,0
PLNSOL,S,INT
/DSCALE,,20
/REPLOT
NSEL,S,LOC,X,11.49,11.51
NSEL,R,LOC,Y,-0.33,149.63
PRNS,U,X
NALL
EALL
NSEL,S,LOC,X,12.624,12.626
NSEL,R,LOC,Y,146.68,156.01
PRNS,U,X
NALL
EALL
NSEL,S,LOC,X,1.356,11.26
NSEL,R,LOC,Y,141.87,143.39
PRNS,U,Y
```

```
NALL
EALL
LPATH,601,641
PRSECT
LPATH,766,806
PRSECT
LPATH,1237,1240
PRSECT
LPATH,1245,1248
PRSECT
LPATH,1229,1232
PRSECT
LPATH,1209,1211
PRSECT
LPATH,1200,1202
PRSECT
LPATH,1261,1291
PRSECT
LPATH,100,101
PRSECT
LPATH,53,55
PRSECT
LPATH,138,140
PRSECT
LPATH,150,152
PRSECT
LPATH,277,279
PRSECT
LPATH,193,195
PRSECT
LPATH,1,41
PRSECT
LPATH,4,44
PRSECT
LPATH,6,46
PRSECT
LPATH,9,49
PRSECT
SAVE
```

COMPUTER RUN COVER SHEET

Project Number:	KH-8009-8
Computer Code:	ANSYS®-PC
Software Version:	5.0A
Computer System:	MS-DOS, Pentium® Processor
Computer Run File Number:	KH-8009-8-03
Unique Computer Run Filename:	TED.out
Run Description:	MCO Top End Drop without Lifting Cap
Run Date / Time:	30 March 1997 11:00:16 AM

Prepared By: Zachary G. Sargent — Date: 4/18/97

Checked By: Joe Nichols — Date: 4/17/97

COMPUTER RUN COVER SHEET

Project Number:	KH-8009-8
Computer Code:	ANSYS®-PC
Software Version:	5.0A
Computer System:	MS-DOS, Pentium® Processor
Computer Run File Number:	KH-8009-8-03
Unique Computer Run Filename:	BED.inp
Run Description:	MCO Bottom End Drop
Creation Date / Time:	30 March 1997 11:32:14 AM

Prepared By: Zachary G. Sargent Date 4/18/97

Checked By: Joe Nichols Date 4/17/97

LISTING OF BED.INP FILE

```
/BATCH,LIST
/FILENAM,BED
/PREP7
/TITLE,MCO DESIGN- 132 DEGREES C, 150 psi PRESSURE, 54 g ACCELERATION

TREF,70
TUNIF,270
ETAN=0.006              ! Tangent modulus

/COM **** ELEMENT TYPES ****
ET,1,42,,,1             ! Shell
ET,2,42,,,1             ! Shield Plug
ET,3,42,,,1             ! Lifting & Locking Ring
ET,4,12                 ! Gap Elements Between Shield Plug & Shell
KEYOPT,4,7,1
ET,5,42,,,1             ! Bolt

/COM **** REAL CONSTANTS FOR GAP ELEMENTS ****
R,4,-90,1.0e8,-0.06,3.0     ! Shell/Shield Plug, Initially Open .06"
R,5,0,1.0e8,2.95e-03        ! L. Ring/Shield Plug, Under Bolt, Preloaded
R,6,0,1.0e8,0,2.0           ! Sealing Surface, closed
R,7,0,1.0e8,0,1.0           ! Bottom MCO Plate, closed
R,8,0,2.42e7,,2.0           ! Seal Spring, Max. Stiffness

/COM ************ MATERIAL PROPERTIES *************
MP,DENS,1,490/1728          ! 304L SS
MP,NUXY,1,0.3

MP,DENS,5,490/1728          ! SA193 Grade B8M
MP,NUXY,5,0.3

TB,BKIN,1,6             ! Yield Stress & Tangent Moduli v. Temp.
TBTEMP,100
TBDATA,1,25000,ETAN*28.1E+06
TBTEMP,200
TBDATA,1,21300,ETAN*27.6E+06
TBTEMP,300
TBDATA,1,19100,ETAN*27.0E+06
TBTEMP,400
TBDATA,1,17500,ETAN*26.5E+06
TBTEMP,500
TBDATA,1,16300,ETAN*25.8E+06
TBTEMP,600
TBDATA,1,15500,ETAN*25.3E+06

/COM **** DEFINING TEMPERATURES FOR MPDATA ****
MPTEMP,1, 70,100,200,300,400,500
MPTEMP,7,600,650,700,750

/COM **** DEFINING ELASTIC MODULI FOR 304L & SA-193 ****
MPDATA,EX,1,1,28.3e+06,28.1e+06,27.6e+06,27.0e+06,26.5e+06,25.8e+06
MPDATA,EX,1,7,25.3e+06,25.1e+06,24.8e+06,24.5e+06
/COM                    ! SA-193
```

```
MPDATA,EX,5,1,28.3e+06,28.1e+06,27.6e+06,27.0e+06,26.5e+06,25.8e+06
MPDATA,EX,5,7,25.3e+06,25.1e+06,24.8e+06,24.5e+06

/COM **** MEAN COEFFICIENTS OF THERMAL EXPANSION (in./in./(F) ****
! SA240 Gr 304L
MPDATA,ALPX,1,1,0,8.55e-06,8.79e-06,9.00e-06,9.19e-06,9.37e-06
MPDATA,ALPX,1,7,9.53e-06,9.61e-06,9.69e-06,9.76e-06

! SA193 Gr B8M
MPDATA,ALPX,5,1,0,8.54e-06,8.76e-06,8.97e-06,9.21e-06,9.42e-06
MPDATA,ALPX,5,7,9.60e-06,9.69e-06,9.76e-06,9.81e-06
/COM ********** SHELL GEOMETRY **********
IR=11.5                 ! Internal Shell Radius @ Bottom
OR=12.000               ! Shell Outside Radius @ Bottom
IR2 = 12.02             ! Inside Radius at Collar Sealing Surface
OR2 = 12.625            ! Outside Radius at Collar Sealing Surface
IR3 = 12.25             ! Inside Radius at Collar-Lifting Ring Weld

/COM **** BOTTOM COVER PLATE  [DWG SK-2-300378] ****
N,1,,-1.32              ! Row 1
N,2,1.25,-1.32
N,3,2.13,-1.32
N,10,11.423,-1.32
FILL

N,41,0.00,-0.44         ! Row 3
N,42,1.25,-0.44
N,43,2.13,0.44
N,50,IR,0.44
FILL,43,50
N,52,OR,0.44
FILL,50,52

FILL,1,41,1,21,1,10     ! Middle Row
FILL,10,50,1,30
N,32,12,-0.32
FILL,30,32
FILL,10,32,1,11
N,53,IR,1.17
N,55,OR,1.17            ! Shell Stub/Weld
FILL,53,55

/COM **** SHELL [DWGS SK-2-300379 & SK-2-300461] ****
N,65,IR,6.68
N,67,OR,6.68
FILL
FILL,53,65,3,,3,3,1

/COM **** SINGLE ROW SHELL ****
N,100,IR,7.18           ! Inside
N,140,IR,71.68
N,180,IR,136.68

N,101,OR,7.18           ! Outside
N,141,OR,71.68
N,181,OR,136.68
```

```
FILL,100,140,20,,2,2,1,2.0
FILL,140,180,19,,2,2,1,.5

/COM **** DOUBLE ROW SHELL ****
N,190,IR,137.18          ! Transition to Double Row
N,192,OR,137.18
FILL

/COM **** BASE OF CASK THROAT--ELEVATION: 138 INCHES ****
N,217,IR,142.68          ! Transition to Double Row
N,219,OR,142.68
FILL
FILL,190,217,8,,3,3,1    ! Vertical Fill

/COM **** BOTTOM OF COLLAR TRANSITION ****
N,235,IR,146.06          ! Start of Transition to Large O.D &
N,237,OR,146.06          ! Assumed Location of Shield Plug Taper
FILL
N,238,IR,146.68
N,240,OR,146.68
FILL                     ! Horizontal Fill
FILL,217,235,5,,3,3,1    ! Vertical Fill

/COM **** TOP OF COLLAR TRANSITION ****
N,241,IR,147.31          ! End of Transition to Large O.D &
N,243,OR,147.31          ! Assumed Location of Shield Plug Taper
FILL                     ! Horizontal Fill
NGEN,2,3,241,243,1,,0.75

/COM **** COLLAR SEALING SURFACE ****
N,247,IR,149.63          ! Inside Radius of Sealing Surface
N,249,IR2,149.63         ! Outside Radius at Sealing Surface
FILL                     ! Horizontal Fill

/COM **** THICK WALL AT COLLAR TRANSITION ****
NGEN,2,10,240,249,3      ! Nodes 250-259 Coincident w/240-249 (by 3)
N,255,OR2,147.31         ! Outside Surface
N,261,OR2,149.63         ! Outside Surface
N,258,OR2,148.06
N,980,IR,149.38
N,981,11.755,149.38
N,982,IR2,149.38
N,983,12.317,149.38
N,984,OR2,149.38
N,990,OR2,146.68
FILL,240,990,1,251
NGEN,2,5,980,984,1,,-0.66
FILL,246,258,1,257
FILL,253,255,1,,1,3,3
FILL,237,990,1,991

/COM **** COLLAR AT BOTTOM EDGE OF PLUG (.155" above Sealing Surface) ****
NGEN,2,3,259,,,,0.245    ! Nodes 262

/COM **** COLLAR AT TOP EDGE OF PLUG (2" above bottom Edge) ****
NGEN,2,9,262,,,,2.00     ! Nodes 271
```

```
FILL,262,271,2

/COM **** COLLAR AT BASE OF THREADS ****
N,274,IR3,152.00
N,1000,IR2,152.00

/COM **** TOP TO COLLAR (WELD CLOSURE) ****
N,295,IR3,156.00
FILL,274,295
NGEN,3,1,259,295,3,(OR2-IR2)/2
NGEN,3,1,274,295,3,(OR2-IR3)/2

/COM ************ LOCKING & LIFTING RING GEOMETRY **************
RING1=7.94
RING2=9.375
RING3=9.625
RING4=10.19
RING5=12.23
LOCAL,11,0,,152.00          ! Local System z=0 at Base of Ring
CSYS,11

/COM **** TOP EDGE ****
N,401,RING1,6.13
CSYS,O
N,404,9.375,158.13
FILL,401,404,,,1
N,406,RING4,158.13
FILL,404,406,,,1            ! Top Edge

/COM **** LIFTING SURFACE ****
CSYS,11
N,421,RING1,5.13
N,424,RING2,5.13
FILL,421,424
N,426,RING4,5.13
FILL,424,426
FILL,401,421,1,,10,6,1
N,431,RING1,6.13-1.56
N,434,RING2,6.13-1.56
FILL

/COM **** BOLTING SURFACE ****
N,441,RING1,4
N,444,RING3,4
FILL
N,445,10.9375-.6875,4        ! Inside Edge of Bolt Hole
N,447,10.9375+.6875,4        ! Outside Edge of Bolt Hole
FILL
N,910,10.9375-.6875,4
N,911,10.9375+.6875,4
N,448,RING5,4                ! O.D of Ring
CSYS,0                       ! Bolt Extension
N,924,10.25,152.00           ! Double Nodes @ Bolt for Gap elements
N,925,11.625,152.00
FILL,910,924,6,,2
FILL,911,925,6,,2
```

```
N,525,10.25,151.874          ! Bottom of Bolt Extension
N,527,11.625,151.874
FILL

/COM **** BOTTOM OF LIFTING/LOCKING RING ****
CSYS,11
NGEN,2,70,441,448,1,,-4      ! Bottom Surface of Lifting/Locking Ring
FILL,441,511,6,,10,8,1       ! Fill in Lifting/Locking Ring

/COM ************ SHIELD PLUG (offset y by 158.25) **************
LOCAL,20,0,,158.13
TYPE,2
PLUGR1=11.975
PLUGR2=11.45
PLUGR3=11.25
PLUGR4=7.89

/COM **** NODES AT PLUG AXIS (r=0) ****
N,601
N,602,0,-1
N,603,0,-1.994
N,606,0,-4.994
FILL,603,606,2,604
N,607,0,-6.25
N,610,0,-8.25
FILL,607,610,2,608
N,611,0,-8.75
N,613,0,-10.5
FILL,611,613

/COM **** NODAL GENERATION ****
NGEN,2,20,601,613,1,0.8825
NGEN,2,20,621,633,1,0.8825          ! Id Large Opening
NGEN,2,20,642,653,1,0.6875
NGEN,2,20,662,673,1,0.6875          ! Id Medium Opening
NGEN,2,20,683,693,1,0.4235          ! Id Small Opening
NGEN,2,10,706,713,1,0.9515          ! Center of Opening

N,730,5.4665,-1.994                 ! Od Small Opening
N,736,5.4665,-4.994
FILL,730,736,5,731
N,737,5.4665,-6.25
N,740,5.4665,-8.25
FILL,737,740,2,738
N,741,5.4665,-8.75
N,743,5.4665,-10.5
FILL,741,743
N,748,5.89,-1.0
NGEN,2,20,730,743,1,0.4235
FILL,748,750
N,766,7.265,0
NGEN,2,20,748,763,1,1.375
FILL,766,768
NGEN,3,20,766,768,1,0.3125
N,789,7.5775,-1.56
N,796,7.5775,-5.56
```

```
FILL,789,796,6
NGEN,2,20,789,796,1,0.3125
NGEN,3,20,777,783,1,0.3125

/COM **** UNDER LOCKING RING ****
N,824,8.5017,-6.25
N,827,8.5017,-8.25
FILL
N,828,8.5017,-8.75
N,830,8.5017,-10.5
FILL
NGEN,3,7,824,830,1,0.5616
NGEN,2,7,838,844,1,0.625
NGEN,2,7,845,851,1,0.6875     ! Under Bolt
N,859,11.625,-6.25
N,860,11.625,-6.917
N,861,11.625,-7.584
N,862,PLUGR2,-8.25
N,863,PLUGR2,-8.75
N,865,PLUGR3,-10.5
FILL,863,865,1
N,866,PLUGR1-0.288,-6.25
N,869,PLUGR1-0.288,-8.25
FILL,866,869,2
N,870,PLUGR1-0.288,-8.476
NGEN,2,5,866,870,1,0.288

/COM **** REFINING LIFTING EAR ****
CSYS,0
N,877,9.53,158.13
N,889,9.53,157.63
N,901,9.53,157.13
FILL,403,404,1,876
FILL,413,414,1,888
FILL,423,424,1,900
FILL,877,405,1,878
FILL,405,406,2,879,1
FILL,889,415,1,890
FILL,415,416,2,891,1
FILL,404,414,1,881
FILL,877,889,1,882
FILL,878,890,1,883
FILL,405,415,1,884
FILL,879,891,1,885
FILL,880,892,1,886
FILL,406,416,1,887
FILL,889,901,1,894
FILL,414,424,1,893
FILL,901,425,1,902
FILL,890,902,1,895
FILL,415,425,1,896
FILL,425,426,2,903,1
FILL,891,903,1,897
FILL,892,904,1,898
FILL,416,426,1,899
FILL,424,434,1,907
```

```
FILL,433,434,1,908
FILL,423,433,1,905
FILL,905,907


/COM **** FILTER GUARD PLATE ****
PLATE1=0.273
PLATE2=0.6575
PLATE3=1.357
PLATE4=10.25
PLATE5=11.25

N,1200,PLATE4,146.78
N,1202,PLATE5,146.78
FILL
NGEN,5,3,1200,1202,,,-0.85
NGEN,2,3,1212,1214,,,-0.25
N,1221,PLATE4,141.88
N,1222,10.75,141.88
N,1223,10.915,141.88
FILL,1215,1221,1,1218
FILL,1223,1217,1,1220
FILL,1216,1222,1,1219
N,1237,6.4375,143.38
FILL,1212,1237,3,1225,4
N,1249,3.578,143.38
FILL,1237,1249,2,1241,4
NGEN,2,1,1225,1249,4,,-0.25
NGEN,2,2,1226,1250,4,,-1.25
FILL,1226,1228,1,1227,,7,4
N,1253,2.625,145.255
N,1254,2.625,145.005
N,1256,2.625,143.38
FILL,1254,1256
N,1257,2.625,143.13
N,1259,2.625,141.88
FILL,1257,1259
NGEN,2,10,1253,1259,1,-0.5
NGEN,2,10,1263,1269,1,-0.768
N,1283,0.6575,145.255
N,1284,0.6575,145.005
N,1260,2.125,147.63
N,1270,1.357,147.63
N,1280,0.6575,147.63
N,1290,0.273,147.63
NGEN,3,1,1260,1290,10,,-0.5625

/COM **** NODES AT BOTTOM GAP ELEMENTS ****
NGEN,2,2000,1,10,1,,-1.00


/COM **** COUPLING NODES ****
/COM **** BETWEEN LIFTING/LOCKING RING & SHELL ****
CP,1,UY,508,277          ! Start Threads
CP,2,UY,498,280
CP,3,UY,488,283
```

```
CP,4,UY,478,286
CP,5,UY,468,289
CP,6,UY,458,292

/COM **** BETWEEN BOLT & LOCKING RING ****
CP,7,UY,445,910
CP,8,UX,445,910
CP,9,UY,447,911
CP,10,UX,447,911
*DO,I,1,7
CP,10+I,UY,445+10*I,910+2*I
*ENDDO
*DO,I,1,7
CP,17+I,UY,447+10*I,911+2*I
*ENDDO
*DO,I,1,7
CP,24+I,UX,445+10*I,910+2*I
*ENDDO
*DO,I,1,7
CP,31+I,UX,447+10*I,911+2*I
*ENDDO
NALL
EALL

/COM **** ELEMENT GENERATION FOR SHELL ****
TYPE,1
MAT,1

/COM **** BOTTOM OF SHELL ****
E,1,2,22,21
E,2,3,23,22
EGEN,8,1,-1
E,10,11,30
E,21,22,42,41
E,22,23,43,42
EGEN,10,1,-1
E,11,31,30
E,11,32,31

/COM **** SHELL ****
E,50,51,54,53
EGEN,2,1,-1
EGEN,5,3,-2

/COM **** FIRST TRANSITION ELEMENTS ****
E,65,66,100
E,100,66,101
E,67,101,66

/COM **** SINGLE SHELL ****
E,100,101,103,102
EGEN,40,2,-1

/COM **** SECOND TRANSITION ELEMENTS ****
E,190,180,191
E,180,181,191
```

```
E,181,192,191

/COM **** TOP SHELL (DOUBLE ELEMENT) ****
E,190,191,194,193
EGEN,2,1,-1
EGEN,18,3,-2
E,244,245,986,985
EGEN,2,1,-1
E,256,257,988,987
E,257,258,989,988
E,985,986,981,980
EGEN,4,1,-1
E,980,981,248,247
EGEN,2,1,-1
E,982,983,260,249
E,983,984,261,260

/COM **** COLLAR TRANSITION & THREADED REGIONS ****
E,237,991,251,240
E,991,990,251
E,240,251,254,253
E,251,990,255,254
E,253,254,257,256
EGEN,2,1,-1
E,259,260,263,262
EGEN,2,1,-1
EGEN,12,3,-2
E,271,274,1000

/COM **** MERGE COINCIDENT NODES FOR SHELL ****
ESEL,S,TYPE,,1
NSLE
NUMMRG,NODE,
EALL
NALL
/COM **** END OF SHELL/COLLAR ELEMENT GENERATION ****

/COM **** LOCKING/LIFTING RING ELEMENTS ****
TYPE,3
MAT,1
E,411,412,402,401
EGEN,2,1,-1
EGEN,2,10,-2
E,413,888,876,403
E,881,404,876
E,888,881,876
E,888,414,881
E,881,882,877,404
E,414,889,882,881
E,882,883,878,877
E,889,890,883,882
E,883,884,405,878
E,890,415,884,883
E,884,885,879,405
E,415,891,885,884
E,885,886,880,879
```

```
E,891,892,886,885
E,886,887,406,880
E,892,416,887,886
E,423,900,888,413
E,893,414,888
E,900,893,888
E,900,424,893
E,893,894,889,414
E,424,901,894,893
E,894,895,890,889
E,901,902,895,894
E,895,896,415,890
E,902,425,896,895
E,896,897,891,415
E,425,903,897,896
E,897,898,892,891
E,903,904,898,897
E,898,899,416,892
E,904,426,899,898
E,431,432,422,421
E,905,423,422
E,432,905,422
E,432,433,905
E,905,906,900,423
E,433,908,906,905
E,906,907,424,900
E,908,434,907,906
E,441,442,432,431
EGEN,2,1,-1
E,443,908,433
E,443,444,434,908
E,451,452,442,441
EGEN,3,1,-1
EGEN,7,10,-3
E,454,912,910,444
E,464,914,912,454
E,474,916,914,464
E,484,918,916,474
E,494,920,918,484
E,504,922,920,494
E,514,924,922,504
E,458,448,911,913
E,468,458,913,915
E,478,468,915,917
E,488,478,917,919
E,498,488,919,921
E,508,498,921,923
E,518,508,923,925

/COM **** BOLT ****
TYPE,5
MAT,5
E,455,456,446,445
EGEN,8,10,-1
E,456,457,447,446
EGEN,8,10,-1
```

```
/COM ************ END OF LOCKING/LIFTING RING ************

/COM **** SHIELD PLUG ELEMENTS ****
TYPE,2
MAT,1
E,602,622,621,601
EGEN,11,1,-1
EGEN,2,20,-11
E,613,1290,612
E,1290,1280,632,612
E,1280,633,632
E,633,1270,632
E,1270,652,632
E,1270,653,652
E,643,663,662,642
EGEN,10,1,-1
EGEN,2,20,-10
E,673,693,692,672
EGEN,2,20,-10
E,653,1260,652
E,1260,672,652
E,1260,673,672
E,707,717,716,706
EGEN,7,1,-1
E,717,737,736,716
EGEN,7,1,-1
E,731,751,750,730
EGEN,13,1,-1
E,749,769,768,748
EGEN,15,1,-1
E,767,787,786,766
EGEN,17,1,-1
EGEN,2,20,-17
E,818,825,824,817
EGEN,6,1,-1
EGEN,5,7,-6
E,853,860,859,852
EGEN,6,1,-1
E,860,867,866,859
EGEN,3,1,-1
E,867,872,871,866
EGEN,4,1,-1
/COM ************ END OF SHIELD PLUG ************

/COM ************ FILTER GUARD PLATE ************
E,1200,1201,858,851
E,1201,1202,865,858
E,1203,1204,1201,1200
EGEN,2,1,-1
EGEN,6,3,-2
E,1221,1222,1219,1218
E,1222,1223,1220,1219
E,1226,1215,1212,1225
E,1227,1218,1215,1226
E,1228,1221,1218,1227
E,1230,1226,1225,1229
```

```
EGEN,3,1,-1
EGEN,6,4,-3
E,1257,1250,1249,1256
EGEN,3,1,-1
E,1264,1254,1253,1263
EGEN,6,1,-1
E,1271,1261,1260,1270
EGEN,9,1,-1
E,1281,1271,1270,1280
EGEN,4,1,-1
E,1291,1281,1280,1290
EGEN,2,1,-1

/COM ********** CONTACT ELEMENTS **********
/COM **** BETWEEN LOCKING RING & SHIELD PLUG ****
TYPE,4
REAL,4
E,806,401
E,807,411
E,808,421
E,809,431
E,810,441
E,811,451
E,812,461
E,813,471
E,814,481
E,815,491
E,816,501
E,817,511

/COM **** BETWEEN SHIELD PLUG & BOTTOM OF BOLT
REAL,5
E,845,525
E,852,526
E,859,527

/COM **** BETWEEN SHIELD PLUG & SHELL (ABOVE SEAL)
REAL,4
E,271,871
E,268,872
E,265,873
E,262,874

/COM **** BETWEEN SHIELD PLUG & SHELL (BELOW SEAL)
E,863,980

/COM **** BETWEEN SHIELD PLUG AND SEAL LIP
TYPE,4
REAL,6
E,248,870
E,249,875

TYPE,4
REAL,8
E,247,862
E,248,869
```

```
/COM **** BOTTOM GAP ELEMENTS
TYPE,4
REAL,7
E,2001,1
EGEN,10,1,-1
NALL
EALL
/COM ************ END GAP ELEMENTS *************

/COM ************ BOUNDARY CONDITIONS *************
CSYS,0
NSEL,S,LOC,X,0
NSEL,R,LOC,Y,-1.33,158.14
D,ALL,UX,0
NALL
EALL
NSEL,S,NODE,,2001,2010
D,ALL,ALL,0
EALL
NALL
SAVE

/COM **** LOAD 1: 150 PSI INTERNAL PRESSURE ****
NSEL,S,LOC,X,0,1.26          ! Bottom Plate
NSEL,R,LOC,Y,-0.45,-0.43
SF,ALL,PRES,150
NALL
EALL
NSEL,S,LOC,X,1.24,2.14
NSEL,R,LOC,Y,-0.45,0.45
SF,ALL,PRES,150
NALL
EALL
NSEL,S,LOC,X,2.12,11.51
NSEL,R,LOC,Y,0.43,0.45
SF,ALL,PRES,150
NALL
EALL
NSEL,S,LOC,X,11.49,11.51     ! Inside Shell
NSEL,R,LOC,Y,0.43,149.64
SF,ALL,PRES,150
NALL
EALL
NSEL,S,LOC,X,11.49,11.76     ! Edge Shell to Seal
NSEL,R,LOC,Y,149.62,149.64
SF,ALL,PRES,150
NALL
EALL
NSEL,S,LOC,X,11.67,11.69     ! Seal
NSEL,R,LOC,Y,149.64,149.89
SF,ALL,PRES,150
NALL
EALL
NSEL,S,LOC,X,11.44,11.69     ! Shield Plug (above seal)
NSEL,R,LOC,Y,149.87,149.89
```

```
SF,ALL,PRES,150
NALL
EALL
NSEL,S,LOC,X,11.44,11.46      ! Side of Shield Plug
NSEL,R,LOC,Y,149.37,149.89
SF,ALL,PRES,150
NALL
EALL
NSEL,S,LOC,X,11.24,11.46      ! Shield Plug Taper
NSEL,R,LOC,Y,147.62,149.39
SF,ALL,PRES,150
NALL
EALL
NSEL,S,LOC,X,11.24,11.26      ! Guard Plate Ring
NSEL,R,LOC,Y,143.12,147.64
SF,ALL,PRES,150
NALL
EALL
NSEL,S,LOC,X,10.914,11.26     ! Guard Plate Taper
NSEL,R,LOC,Y,141.87,143.14
SF,ALL,PRES,150
NALL
EALL
NSEL,S,LOC,X,1.34,10.92       ! Guard Plate Bottom
NSEL,R,LOC,Y,141.87,141.89
SF,ALL,PRES,150
NALL
EALL
SAVE

/COM **** LOAD 2: APPLYING PRESSURE GRADIENT (BASKETS) **************
NSEL,S,NODE,,114,116,2        ! Top of bottom basket
SF,ALL,PRES,623.86
SFCUM,PRES,ADD
NALL
EALL
NSEL,S,NODE,,112,114,2
SF,ALL,PRES,633.05
SFCUM,PRES,ADD
NALL
EALL
NSEL,S,NODE,,110,112,2
SF,ALL,PRES,641.94
SFCUM,PRES,ADD
NALL
EALL
NSEL,S,NODE,,108,110,2
SF,ALL,PRES,650.52
SFCUM,PRES,ADD
NALL
EALL
NSEL,S,NODE,,106,108,2
SF,ALL,PRES,658.80
SFCUM,PRES,ADD
NALL
EALL
```

```
NSEL,S,NODE,,104,106,2
SF,ALL,PRES,666.81
SFCUM,PRES,ADD
NALL
EALL
NSEL,S,NODE,,102,104,2
SF,ALL,PRES,674.54
SFCUM,PRES,ADD
NALL
EALL
NSEL,S,NODE,,100,102,2
SF,ALL,PRES,682.01
SFCUM,PRES,ADD
NALL
EALL
NSEL,S,NODE,,65,100,35
SF,ALL,PRES,683.77
SFCUM,PRES,ADD
NALL
EALL
NSEL,S,NODE,,62,65,3
SF,ALL,PRES,688.61
SFCUM,PRES,ADD
NALL
EALL
NSEL,S,NODE,,59,62,3
SF,ALL,PRES,693.45
SFCUM,PRES,ADD
NALL
EALL
NSEL,S,NODE,,56,59,3
SF,ALL,PRES,698.30
SFCUM,PRES,ADD
NALL
EALL
NSEL,S,NODE,,53,56,3
SF,ALL,PRES,703.14
SFCUM,PRES,ADD
NALL
EALL
NSEL,S,NODE,,50,53,3
SF,ALL,PRES,705.71        ! Bottom of Bottom Basket
SFCUM,PRES,ADD
NALL
EALL
NSEL,S,LOC,X,0,1.26
NSEL,R,LOC,Y,-0.45,-0.43
SF,ALL,PRES,2079.5        ! Vertical Pressure from 5 Baskets
SFCUM,PRES,ADD            ! at 54 g's
NALL
EALL
NSEL,S,LOC,X,1.24,2.14
NSEL,R,LOC,Y,-0.45,0.45
SF,ALL,PRES,2079.5
SFCUM,PRES,ADD
NALL
```

```
EALL
NSEL,S,LOC,X,2.12,11.51
NSEL,R,LOC,Y,0.43,0.45
SF,ALL,PRES,2079.5
SFCUM,PRES,ADD
NALL
EALL
SAVE

/COM **** LOAD 3: APPLYING 54g ACCELERATION ****
ACEL,,54              ! Impose 54 g Acceleration
SAVE
FINI

!*************************************************************
/COM ***************      SOLUTION PHASE      **************
/SOLUTION
SOLVE
SAVE
FINI

/COM **** POSTPROCESSING ****
/POST1
SET,LAST
/TYPE,ALL,HIDC
/GLINE,ALL,0
RSYS,0
PLNSOL,S,INT
/DSCALE,,20
/REPLOT
NSEL,S,LOC,X,11.49,11.51
NSEL,R,LOC,Y,-0.33,149.63
PRNS,U,X
NALL
EALL
NSEL,S,LOC,X,12.624,12.626
NSEL,R,LOC,Y,146.68,156.01
PRNS,U,X
NALL
EALL
NSEL,S,LOC,X,1.356,11.26   ! Guard Plate
NSEL,R,LOC,Y,141.87,143.39
PRNS,U,Y
NALL
EALL
LPATH,862,873
PRSECT
LPATH,870,874
PRSECT
LPATH,870,875
PRSECT
LPATH,1237,1240
PRSECT
LPATH,1245,1248
PRSECT
LPATH,1229,1232
```

```
PRSECT
LPATH,1209,1211
PRSECT
LPATH,1200,1202
PRSECT
LPATH,1284,1263
PRSECT
LPATH,1261,1291
PRSECT
LPATH,100,101
PRSECT
LPATH,116,117
PRSECT
LPATH,130,132
PRSECT
LPATH,150,152
PRSECT
LPATH,277,279
PRSECT
LPATH,50,52
PRSECT
LPATH,9,49
PRSECT
LPATH,6,46
PRSECT
LPATH,4,44
PRSECT
LPATH,1,41
PRSECT
SAVE
```

COMPUTER RUN COVER SHEET

Project Number:	KH-8009-8
Computer Code:	ANSYS®-PC
Software Version:	5.0A
Computer System:	MS-DOS, Pentium® Processor
Computer Run File Number:	KH-8009-8-03
Unique Computer Run Filename:	BED.out
Run Description:	MCO Bottom End Drop
Run Date / Time:	30 March 1997 11:39:38 AM

Prepared By: Zachary G. Sargent Date 4/18/97

Checked By: Joe Nichols Date 4/17/97

COMPUTER RUN COVER SHEET

Project Number:	KH-8009-8
Computer Code:	ANSYS®-PC
Software Version:	5.0A
Computer System:	MS-DOS, Pentium® Processor
Computer Run File Number:	KH-8009-8-03
Unique Computer Run Filename:	FINE.inp
Run Description:	MCO Bottom End Drop w/ Fine Mesh
Creation Date / Time:	3 April 1997 6:36:58 PM

Prepared By: Zachary G. Sargent Date 4/18/97

Checked By: Joe Nichols Date 4/17/97

LISTING OF FINE.INP FILE

```
/BATCH,LIST
/FILENAM,FINE
/PREP7
/TITLE,MCO DESIGN- 132 DEGREES C, 150 psi PRESSURE, 54 g ACCELERATION

TREF,70
TUNIF,270
ETAN=0.006              ! Tangent modulus

/COM **** ELEMENT TYPES ****
ET,1,42,,,1             ! Shell
ET,2,42,,,1             ! Shield Plug
ET,3,42,,,1             ! Lifting & Locking Ring
ET,4,12                 ! Gap Elements Between Shield Plug & Shell
KEYOPT,4,7,1
ET,5,42,,,1             ! Bolt

/COM **** REAL CONSTANTS FOR GAP ELEMENTS ****
R,4,-90,1.0e8,-0.06,3.0     ! Shell/Shield Plug, Initially Open .06"
R,5,0,1.0e8,2.95e-03        ! L. Ring/Shield Plug, Under Bolt, Preloaded
R,6,0,1.0e8,0,2.0           ! Sealing Surface, closed
R,7,0,1.0e8,0,1.0           ! Bottom MCO Plate, closed
R,8,0,2.42e7,,2.0           ! Seal Spring, Max. Stiffness

/COM ************ MATERIAL PROPERTIES ************
MP,DENS,1,490/1728          ! 304L SS
MP,NUXY,1,0.3

MP,DENS,5,490/1728          ! SA193 Grade B8M
MP,NUXY,5,0.3

TB,BKIN,1,6             ! Yield Stress & Tangent Moduli v. Temp.
TBTEMP,100
TBDATA,1,25000,ETAN*28.1E+06
TBTEMP,200
TBDATA,1,21300,ETAN*27.6E+06
TBTEMP,300
TBDATA,1,19100,ETAN*27.0E+06
TBTEMP,400
TBDATA,1,17500,ETAN*26.5E+06
TBTEMP,500
TBDATA,1,16300,ETAN*25.8E+06
TBTEMP,600
TBDATA,1,15500,ETAN*25.3E+06

/COM **** DEFINING TEMPERATURES FOR MPDATA ****
MPTEMP,1, 70,100,200,300,400,500
MPTEMP,7,600,650,700,750

/COM **** DEFINING ELASTIC MODULI FOR 304L & SA-193 ****
MPDATA,EX,1,1,28.3e+06,28.1e+06,27.6e+06,27.0e+06,26.5e+06,25.8e+06
MPDATA,EX,1,7,25.3e+06,25.1e+06,24.8e+06,24.5e+06
/COM                    ! SA-193
```

```
MPDATA,EX,5,1,28.3e+06,28.1e+06,27.6e+06,27.0e+06,26.5e+06,25.8e+06
MPDATA,EX,5,7,25.3e+06,25.1e+06,24.8e+06,24.5e+06

/COM **** MEAN COEFFICIENTS OF THERMAL EXPANSION (in./in./(F) ****
! SA240 Gr 304L
MPDATA,ALPX,1,1,0,8.55e-06,8.79e-06,9.00e-06,9.19e-06,9.37e-06
MPDATA,ALPX,1,7,9.53e-06,9.61e-06,9.69e-06,9.76e-06

! SA193 Gr B8M
MPDATA,ALPX,5,1,0,8.54e-06,8.76e-06,8.97e-06,9.21e-06,9.42e-06
MPDATA,ALPX,5,7,9.60e-06,9.69e-06,9.76e-06,9.81e-06
/COM ************ SHELL GEOMETRY ***************
IR=11.5                ! Internal Shell Radius @ Bottom
OR=12.000              ! Shell Outside Radius @ Bottom
IR2 = 12.02            ! Inside Radius at Collar Sealing Surface
OR2 = 12.625           ! Outside Radius at Collar Sealing Surface
IR3 = 12.25            ! Inside Radius at Collar-Lifting Ring Weld

/COM **** BOTTOM COVER PLATE  [DWG SK-2-300378] ****
N,1,,-1.32             ! Row 1
N,2,1.25,-1.32
N,3,2.13,-1.32
N,10,11.423,-1.32
FILL

N,41,0.00,-0.44        ! Row 3
N,42,1.25,-0.44
N,43,2.13,0.44
N,50,IR,0.44
FILL,43,50
N,52,OR,0.44
FILL,50,52

FILL,1,41,1,21,1,10    ! Middle Row
FILL,10,50,1,30
N,32,12,-0.32
FILL,30,32
FILL,10,32,1,11
N,53,IR,1.17
N,55,OR,1.17           ! Shell Stub/Weld
FILL,53,55
FILL,50,53,1,1101
FILL,51,54,1,1102
FILL,52,55,1,1103

/COM **** SHELL [DWGS SK-2-300379 & SK-2-300461] ****
N,65,IR,6.68
N,67,OR,6.68
FILL
FILL,53,65,3,,3,3,1
FILL,53,56,1,1104
FILL,55,58,1,1106
FILL,1104,1106
FILL,56,59,1,1107
FILL,58,61,1,1109
FILL,1107,1109
```

```
FILL,59,62,1,1110
FILL,61,64,1,1112
FILL,1110,1112
FILL,62,65,1,1113
FILL,64,67,1,1115
FILL,1113,1115

/COM **** SINGLE ROW SHELL ****
N,100,IR,7.18              ! Inside
N,140,IR,71.68
N,180,IR,136.68

N,101,OR,7.18              ! Outside
N,141,OR,71.68
N,181,OR,136.68
FILL,100,140,20,,2,2,1,2.0
FILL,140,180,19,,2,2,1,.5
FILL,100,102,2,1116,2
FILL,102,104,2,1120,2
FILL,104,106,2,1124,2
FILL,106,108,2,1128,2
FILL,108,110,2,1132,2
FILL,110,112,2,1136,2
FILL,112,114,2,1140,2
FILL,114,116,2,1144,2
NGEN,2,1,1116,1146,2,0.50

/COM **** DOUBLE ROW SHELL ****
N,190,IR,137.18            ! Transition to Double Row
N,192,OR,137.18
FILL

/COM **** BASE OF CASK THROAT--ELEVATION: 138 INCHES ****
N,217,IR,142.68            ! Transition to Double Row
N,219,OR,142.68
FILL
FILL,190,217,8,,3,3,1      ! Vertical Fill

/COM **** BOTTOM OF COLLAR TRANSITION ****
N,235,IR,146.06            ! Start of Transition to Large O.D &
N,237,OR,146.06            ! Assumed Location of Shield Plug Taper
FILL
N,238,IR,146.68
N,240,OR,146.68
FILL                ! Horizontal Fill
FILL,217,235,5,,3,3,1      ! Vertical Fill

/COM **** TOP OF COLLAR TRANSITION ****
N,241,IR,147.31            ! End of Transition to Large O.D &
N,243,OR,147.31            ! Assumed Location of Shield Plug Taper
FILL                ! Horizontal Fill
NGEN,2,3,241,243,1,,0.75

/COM **** COLLAR SEALING SURFACE ****
N,247,IR,149.63            ! Inside Radius of Sealing Surface
N,249,IR2,149.63           ! Outside Radius at Sealing Surface
```

```
FILL                    ! Horizontal Fill

/COM **** THICK WALL AT COLLAR TRANSITION ****
NGEN,2,10,240,249,3         ! Nodes 250-259 Coincident w/240-249 (by 3)
N,255,OR2,147.31            ! Outside Surface
N,261,OR2,149.63            ! Outside Surface
N,258,OR2,148.06
N,980,IR,149.38
N,981,11.755,149.38
N,982,IR2,149.38
N,983,12.317,149.38
N,984,OR2,149.38
N,990,OR2,146.68
FILL,240,990,1,251
NGEN,2,5,980,984,1,,-0.66
FILL,246,258,1,257
FILL,253,255,1,,1,3,3
FILL,237,990,1,991

/COM **** COLLAR AT BOTTOM EDGE OF PLUG (.155" above Sealing Surface) ****
NGEN,2,3,259,,,,0.245       ! Nodes 262

/COM **** COLLAR AT TOP EDGE OF PLUG (2" above bottom Edge) ****
NGEN,2,9,262,,,,2.00        ! Nodes 271
FILL,262,271,2

/COM **** COLLAR AT BASE OF THREADS ****
N,274,IR3,152.00
N,1000,IR2,152.00

/COM **** TOP TO COLLAR (WELD CLOSURE) ****
N,295,IR3,156.00
FILL,274,295
NGEN,3,1,259,295,3,(OR2-IR2)/2
NGEN,3,1,274,295,3,(OR2-IR3)/2

/COM ********** LOCKING & LIFTING RING GEOMETRY **********
RING1=7.94
RING2=9.375
RING3=9.625
RING4=10.19
RING5=12.23
LOCAL,11,0,,152.00          ! Local System z=0 at Base of Ring
CSYS,11

/COM **** TOP EDGE ****
N,401,RING1,6.13
CSYS,O
N,404,9.375,158.13
FILL,401,404,,,1
N,406,RING4,158.13
FILL,404,406,,,1            ! Top Edge

/COM **** LIFTING SURFACE ****
CSYS,11
N,421,RING1,5.13
```

```
N,424,RING2,5.13
FILL,421,424
N,426,RING4,5.13
FILL,424,426
FILL,401,421,1,,10,6,1
N,431,RING1,6.13-1.56
N,434,RING2,6.13-1.56
FILL

/COM **** BOLTING SURFACE ****
N,441,RING1,4
N,444,RING3,4
FILL
N,445,10.9375-.6875,4          ! Inside Edge of Bolt Hole
N,447,10.9375+.6875,4          ! Outside Edge of Bolt Hole
FILL
N,910,10.9375-.6875,4
N,911,10.9375+.6875,4
N,448,RING5,4                  ! O.D of Ring
CSYS,0                         ! Bolt Extension
N,924,10.25,152.00             ! Double Nodes @ Bolt for Gap elements
N,925,11.625,152.00
FILL,910,924,6,,2
FILL,911,925,6,,2
N,525,10.25,151.874            ! Bottom of Bolt Extension
N,527,11.625,151.874
FILL

/COM **** BOTTOM OF LIFTING/LOCKING RING ****
CSYS,11
NGEN,2,70,441,448,1,,-4        ! Bottom Surface of Lifting/Locking Ring
FILL,441,511,6,,10,8,1         ! Fill in Lifting/Locking Ring

/COM ************ SHIELD PLUG (offset y by 158.25) ************
LOCAL,20,0,,158.13
TYPE,2
PLUGR1=11.975
PLUGR2=11.45
PLUGR3=11.25
PLUGR4=7.89

/COM **** NODES AT PLUG AXIS (r=0) ****
N,601
N,602,0,-1
N,603,0,-1.994
N,606,0,-4.994
FILL,603,606,2,604
N,607,0,-6.25
N,610,0,-8.25
FILL,607,610,2,608
N,611,0,-8.75
N,613,0,-10.5
FILL,611,613

/COM **** NODAL GENERATION ****
NGEN,2,20,601,613,1,0.8825
```

```
NGEN,2,20,621,633,1,0.8825          ! Id Large Opening
NGEN,2,20,642,653,1,0.6875
NGEN,2,20,662,673,1,0.6875          ! Id Medium Opening
NGEN,2,20,683,693,1,0.4235          ! Id Small Opening
NGEN,2,10,706,713,1,0.9515          ! Center of Opening

N,730,5.4665,-1.994                 ! Od Small Opening
N,736,5.4665,-4.994
FILL,730,736,5,731
N,737,5.4665,-6.25
N,740,5.4665,-8.25
FILL,737,740,2,738
N,741,5.4665,-8.75
N,743,5.4665,-10.5
FILL,741,743
N,748,5.89,-1.0
NGEN,2,20,730,743,1,0.4235
FILL,748,750
N,766,7.265,0
NGEN,2,20,748,763,1,1.375
FILL,766,768
NGEN,3,20,766,768,1,0.3125
N,789,7.5775,-1.56
N,796,7.5775,-5.56
FILL,789,796,6
NGEN,2,20,789,796,1,0.3125
NGEN,3,20,777,783,1,0.3125

/COM **** UNDER LOCKING RING ****
N,824,8.5017,-6.25
N,827,8.5017,-8.25
FILL
N,828,8.5017,-8.75
N,830,8.5017,-10.5
FILL
NGEN,3,7,824,830,1,0.5616
NGEN,2,7,838,844,1,0.625
NGEN,2,7,845,851,1,0.6875      ! Under Bolt
N,859,11.625,-6.25
N,860,11.625,-6.917
N,861,11.625,-7.584
N,862,PLUGR2,-8.25
N,863,PLUGR2,-8.75
N,865,PLUGR3,-10.5
FILL,863,865,1
N,866,PLUGR1-0.288,-6.25
N,869,PLUGR1-0.288,-8.25
FILL,866,869,2
N,870,PLUGR1-0.288,-8.476
NGEN,2,5,866,870,1,0.288

/COM **** REFINING LIFTING EAR ****
CSYS,0
N,877,9.53,158.13
N,889,9.53,157.63
N,901,9.53,157.13
```

```
FILL,403,404,1,876
FILL,413,414,1,888
FILL,423,424,1,900
FILL,877,405,1,878
FILL,405,406,2,879,1
FILL,889,415,1,890
FILL,415,416,2,891,1
FILL,404,414,1,881
FILL,877,889,1,882
FILL,878,890,1,883
FILL,405,415,1,884
FILL,879,891,1,885
FILL,880,892,1,886
FILL,406,416,1,887
FILL,889,901,1,894
FILL,414,424,1,893
FILL,901,425,1,902
FILL,890,902,1,895
FILL,415,425,1,896
FILL,425,426,2,903,1
FILL,891,903,1,897
FILL,892,904,1,898
FILL,416,426,1,899
FILL,424,434,1,907
FILL,433,434,1,908
FILL,423,433,1,905
FILL,905,907


/COM **** FILTER GUARD PLATE ****
PLATE1=0.273
PLATE2=0.6575
PLATE3=1.357
PLATE4=10.25
PLATE5=11.25

N,1200,PLATE4,146.78
N,1202,PLATE5,146.78
FILL
NGEN,5,3,1200,1202,,,-0.85
NGEN,2,3,1212,1214,,,-0.25
N,1221,PLATE4,141.88
N,1222,10.75,141.88
N,1223,10.915,141.88
FILL,1215,1221,1,1218
FILL,1223,1217,1,1220
FILL,1216,1222,1,1219
N,1237,6.4375,143.38
FILL,1212,1237,3,1225,4
N,1249,3.578,143.38
FILL,1237,1249,2,1241,4
NGEN,2,1,1225,1249,4,,-0.25
NGEN,2,2,1226,1250,4,,-1.25
FILL,1226,1228,1,1227,,7,4
N,1253,2.625,145.255
N,1254,2.625,145.005
```

```
N,1256,2.625,143.38
FILL,1254,1256
N,1257,2.625,143.13
N,1259,2.625,141.88
FILL,1257,1259
NGEN,2,10,1253,1259,1,-0.5
NGEN,2,10,1263,1269,1,-0.768
N,1283,0.6575,145.255
N,1284,0.6575,145.005
N,1260,2.125,147.63
N,1270,1.357,147.63
N,1280,0.6575,147.63
N,1290,0.273,147.63
NGEN,3,1,1260,1290,10,,-0.5625

/COM **** NODES AT BOTTOM GAP ELEMENTS ****
NGEN,2,2000,1,10,1,,-1.00


/COM **** COUPLING NODES ****
/COM **** BETWEEN LIFTING/LOCKING RING & SHELL ****
CP,1,UY,508,277              ! Start Threads
CP,2,UY,498,280
CP,3,UY,488,283
CP,4,UY,478,286
CP,5,UY,468,289
CP,6,UY,458,292

/COM **** BETWEEN BOLT & LOCKING RING ****
CP,7,UY,445,910
CP,8,UX,445,910
CP,9,UY,447,911
CP,10,UX,447,911
*DO,I,1,7
CP,10+I,UY,445+10*I,910+2*I
*ENDDO
*DO,I,1,7
CP,17+I,UY,447+10*I,911+2*I
*ENDDO
*DO,I,1,7
CP,24+I,UX,445+10*I,910+2*I
*ENDDO
*DO,I,1,7
CP,31+I,UX,447+10*I,911+2*I
*ENDDO
NALL
EALL

/COM **** ELEMENT GENERATION FOR SHELL ****
TYPE,1
MAT,1

/COM **** BOTTOM OF SHELL ****
E,1,2,22,21
E,2,3,23,22
EGEN,8,1,-1
```

```
E,10,11,30
E,21,22,42,41
E,22,23,43,42
EGEN,10,1,-1
E,11,31,30
E,11,32,31

/COM **** SHELL ****
E,50,51,1102,1101
EGEN,2,1,-1
E,1101,1102,54,53
EGEN,2,1,-1
E,53,54,1105,1104
EGEN,2,1,-1
E,1104,1105,57,56
EGEN,2,1,-1
E,56,57,1108,1107
EGEN,2,1,-1
E,1107,1108,60,59
EGEN,2,1,-1
E,59,60,1111,1110
EGEN,2,1,-1
E,1110,1111,63,62
EGEN,2,1,-1
E,62,63,1114,1113
EGEN,2,1,-1
E,1113,1114,66,65
EGEN,2,1,-1

/COM **** FIRST TRANSITION ELEMENTS ****
E,65,66,100
E,100,66,101
E,67,101,66

/COM **** SINGLE SHELL ****
E,100,101,1117,1116
E,1116,1117,1119,1118
E,1118,1119,103,102
E,102,103,1121,1120
E,1120,1121,1123,1122
E,1122,1123,105,104
E,104,105,1125,1124
E,1124,1125,1127,1126
E,1126,1127,107,106
E,106,107,1129,1128
E,1128,1129,1131,1130
E,1130,1131,109,108
E,108,109,1133,1132
E,1132,1133,1135,1134
E,1134,1135,111,110
E,110,111,1137,1136
E,1136,1137,1139,1138
E,1138,1139,113,112
E,112,113,1141,1140
E,1140,1141,1143,1142
E,1142,1143,115,114
```

```
E,114,115,1145,1144
E,1144,1145,1147,1146
E,1146,1147,117,116
E,116,117,119,118
EGEN,32,2,-1

/COM **** SECOND TRANSITION ELEMENTS ****
E,190,180,191
E,180,181,191
E,181,192,191

/COM **** TOP SHELL (DOUBLE ELEMENT) ****
E,190,191,194,193
EGEN,2,1,-1
EGEN,18,3,-2
E,244,245,986,985
EGEN,2,1,-1
E,256,257,988,987
E,257,258,989,988
E,985,986,981,980
EGEN,4,1,-1
E,980,981,248,247
EGEN,2,1,-1
E,982,983,260,249
E,983,984,261,260

/COM **** COLLAR TRANSITION & THREADED REGIONS ****
E,237,991,251,240
E,991,990,251
E,240,251,254,253
E,251,990,255,254
E,253,254,257,256
EGEN,2,1,-1
E,259,260,263,262
EGEN,2,1,-1
EGEN,12,3,-2
E,271,274,1000

/COM **** MERGE COINCIDENT NODES FOR SHELL ****
ESEL,S,TYPE,,1
NSLE
NUMMRG,NODE,
EALL
NALL
/COM **** END OF SHELL/COLLAR ELEMENT GENERATION ****

/COM **** LOCKING/LIFTING RING ELEMENTS ****
TYPE,3
MAT,1
E,411,412,402,401
EGEN,2,1,-1
EGEN,2,10,-2
E,413,888,876,403
E,881,404,876
E,888,881,876
E,888,414,881
```

E,881,882,877,404
E,414,889,882,881
E,882,883,878,877
E,889,890,883,882
E,883,884,405,878
E,890,415,884,883
E,884,885,879,405
E,415,891,885,884
E,885,886,880,879
E,891,892,886,885
E,886,887,406,880
E,892,416,887,886
E,423,900,888,413
E,893,414,888
E,900,893,888
E,900,424,893
E,893,894,889,414
E,424,901,894,893
E,894,895,890,889
E,901,902,895,894
E,895,896,415,890
E,902,425,896,895
E,896,897,891,415
E,425,903,897,896
E,897,898,892,891
E,903,904,898,897
E,898,899,416,892
E,904,426,899,898
E,431,432,422,421
E,905,423,422
E,432,905,422
E,432,433,905
E,905,906,900,423
E,433,908,906,905
E,906,907,424,900
E,908,434,907,906
E,441,442,432,431
EGEN,2,1,-1
E,443,908,433
E,443,444,434,908
E,451,452,442,441
EGEN,3,1,-1
EGEN,7,10,-3
E,454,912,910,444
E,464,914,912,454
E,474,916,914,464
E,484,918,916,474
E,494,920,918,484
E,504,922,920,494
E,514,924,922,504
E,458,448,911,913
E,468,458,913,915
E,478,468,915,917
E,488,478,917,919
E,498,488,919,921
E,508,498,921,923

```
E,518,508,923,925

/COM **** BOLT ****
TYPE,5
MAT,5
E,455,456,446,445
EGEN,8,10,-1
E,456,457,447,446
EGEN,8,10,-1
/COM ********** END OF LOCKING/LIFTING RING **********

/COM **** SHIELD PLUG ELEMENTS ****
TYPE,2
MAT,1
E,602,622,621,601
EGEN,11,1,-1
EGEN,2,20,-11
E,613,1290,612
E,1290,1280,632,612
E,1280,633,632
E,633,1270,632
E,1270,652,632
E,1270,653,652
E,643,663,662,642
EGEN,10,1,-1
EGEN,2,20,-10
E,673,693,692,672
EGEN,2,20,-10
E,653,1260,652
E,1260,672,652
E,1260,673,672
E,707,717,716,706
EGEN,7,1,-1
E,717,737,736,716
EGEN,7,1,-1
E,731,751,750,730
EGEN,13,1,-1
E,749,769,768,748
EGEN,15,1,-1
E,767,787,786,766
EGEN,17,1,-1
EGEN,2,20,-17
E,818,825,824,817
EGEN,6,1,-1
EGEN,5,7,-6
E,853,860,859,852
EGEN,6,1,-1
E,860,867,866,859
EGEN,3,1,-1
E,867,872,871,866
EGEN,4,1,-1
/COM ********** END OF SHIELD PLUG **********

/COM ********** FILTER GUARD PLATE **********
E,1200,1201,858,851
E,1201,1202,865,858
```

```
E,1203,1204,1201,1200
EGEN,2,1,-1
EGEN,6,3,-2
E,1221,1222,1219,1218
E,1222,1223,1220,1219
E,1226,1215,1212,1225
E,1227,1218,1215,1226
E,1228,1221,1218,1227
E,1230,1226,1225,1229
EGEN,3,1,-1
EGEN,6,4,-3
E,1257,1250,1249,1256
EGEN,3,1,-1
E,1264,1254,1253,1263
EGEN,6,1,-1
E,1271,1261,1260,1270
EGEN,9,1,-1
E,1281,1271,1270,1280
EGEN,4,1,-1
E,1291,1281,1280,1290
EGEN,2,1,-1

/COM ********** CONTACT ELEMENTS **********
/COM **** BETWEEN LOCKING RING & SHIELD PLUG ****
TYPE,4
REAL,4
E,806,401
E,807,411
E,808,421
E,809,431
E,810,441
E,811,451
E,812,461
E,813,471
E,814,481
E,815,491
E,816,501
E,817,511

/COM **** BETWEEN SHIELD PLUG & BOTTOM OF BOLT
REAL,5
E,845,525
E,852,526
E,859,527

/COM **** BETWEEN SHIELD PLUG & SHELL (ABOVE SEAL)
REAL,4
E,271,871
E,268,872
E,265,873
E,262,874

/COM **** BETWEEN SHIELD PLUG & SHELL (BELOW SEAL)
E,863,980

/COM **** BETWEEN SHIELD PLUG AND SEAL LIP
```

```
TYPE,4
REAL,6
E,248,870
E,249,875

TYPE,4
REAL,8
E,247,862
E,248,869

/COM **** BOTTOM GAP ELEMENTS
TYPE,4
REAL,7
E,2001,1
EGEN,10,1,-1
NALL
EALL
/COM ************** END GAP ELEMENTS **************

/COM ************** BOUNDARY CONDITIONS **************
CSYS,0
NSEL,S,LOC,X,0
NSEL,R,LOC,Y,-1.33,158.14
D,ALL,UX,0
NALL
EALL
NSEL,S,NODE,,2001,2010
D,ALL,ALL,0
EALL
NALL
SAVE

/COM **** LOAD 1: 150 PSI INTERNAL PRESSURE ****
NSEL,S,LOC,X,0,1.26          ! Bottom Plate
NSEL,R,LOC,Y,-0.45,-0.43
SF,ALL,PRES,150
NALL
EALL
NSEL,S,LOC,X,1.24,2.14
NSEL,R,LOC,Y,-0.45,0.45
SF,ALL,PRES,150
NALL
EALL
NSEL,S,LOC,X,2.12,11.51
NSEL,R,LOC,Y,0.43,0.45
SF,ALL,PRES,150
NALL
EALL
NSEL,S,LOC,X,11.49,11.51     ! Inside Shell
NSEL,R,LOC,Y,0.43,149.64
SF,ALL,PRES,150
NALL
EALL
NSEL,S,LOC,X,11.49,11.76     ! Edge Shell to Seal
NSEL,R,LOC,Y,149.62,149.64
SF,ALL,PRES,150
```

```
NALL
EALL
NSEL,S,LOC,X,11.67,11.69      ! Seal
NSEL,R,LOC,Y,149.64,149.89
SF,ALL,PRES,150
NALL
EALL
NSEL,S,LOC,X,11.44,11.69      ! Shield Plug (above seal)
NSEL,R,LOC,Y,149.87,149.89
SF,ALL,PRES,150
NALL
EALL
NSEL,S,LOC,X,11.44,11.46      ! Side of Shield Plug
NSEL,R,LOC,Y,149.37,149.89
SF,ALL,PRES,150
NALL
EALL
NSEL,S,LOC,X,11.24,11.46      ! Shield Plug Taper
NSEL,R,LOC,Y,147.62,149.39
SF,ALL,PRES,150
NALL
EALL
NSEL,S,LOC,X,11.24,11.26      ! Guard Plate Ring
NSEL,R,LOC,Y,143.12,147.64
SF,ALL,PRES,150
NALL
EALL
NSEL,S,LOC,X,10.914,11.26     ! Guard Plate Taper
NSEL,R,LOC,Y,141.87,143.14
SF,ALL,PRES,150
NALL
EALL
NSEL,S,LOC,X,1.34,10.92       ! Guard Plate Bottom
NSEL,R,LOC,Y,141.87,141.89
SF,ALL,PRES,150
NALL
EALL
SAVE

/COM **** LOAD 2: APPLYING PRESSURE GRADIENT (BASKETS) *************
NSEL,S,NODE,,116,1146,1030      ! Top of bottom basket
SF,ALL,PRES,623.86
SFCUM,PRES,ADD
NALL
EALL
NSEL,S,NODE,,1144,1146,2
SF,ALL,PRES,627.03
SFCUM,PRES,ADD
NALL
EALL
NSEL,S,NODE,,114,1144,1030
SF,ALL,PRES,630.20
SFCUM,PRES,ADD
NALL
EALL
NSEL,S,NODE,,114,1142,1028
```

```
SF,ALL,,PRES,633.27
SFCUM,PRES,ADD
NALL
EALL
NSEL,S,NODE,,1140,1142,2
SF,ALL,PRES,636.33
SFCUM,PRES,ADD
NALL
EALL
NSEL,S,NODE,,112,1140,1028
SF,ALL,PRES,639.40
SFCUM,PRES,ADD
NALL
EALL
NSEL,S,NODE,,112,1138,1026
SF,ALL,PRES,642.36
SFCUM,PRES,ADD
NALL
EALL
NSEL,S,NODE,,1136,1138,2
SF,ALL,PRES,645.32
SFCUM,PRES,ADD
NALL
EALL
NSEL,S,NODE,,110,1136,1026
SF,ALL,PRES,648.28
SFCUM,PRES,ADD
NALL
EALL
NSEL,S,NODE,,110,1134,1024
SF,ALL,,PRES,651.14
SFCUM,PRES,ADD
NALL
EALL
NSEL,S,NODE,,1132,1134,2
SF,ALL,PRES,654.00
SFCUM,PRES,ADD
NALL
EALL
NSEL,S,NODE,,108,1132,1024
SF,ALL,PRES,656.86
SFCUM,PRES,ADD
NALL
EALL
NSEL,S,NODE,,108,1130,1022
SF,ALL,PRES,659.62
SFCUM,PRES,ADD
NALL
EALL
NSEL,S,NODE,,1128,1130,2
SF,ALL,PRES,662.38
SFCUM,PRES,ADD
NALL
EALL
NSEL,S,NODE,,106,1128,1022
SF,ALL,PRES,665.14
```

```
SFCUM,PRES,ADD
NALL
EALL
NSEL,S,NODE,,106,1126,1020
SF,ALL,PRES,667.81
SFCUM,PRES,ADD
NALL
EALL
NSEL,S,NODE,,1124,1126,2
SF,ALL,PRES,670.48
SFCUM,PRES,ADD
NALL
EALL
NSEL,S,NODE,,104,1124,1020
SF,ALL,PRES,673.15
SFCUM,PRES,ADD
NALL
EALL
NSEL,S,NODE,,104,1122,1018
SF,ALL,PRES,675.73
SFCUM,PRES,ADD
NALL
EALL
NSEL,S,NODE,,1120,1122,2
SF,ALL,PRES,678.31
SFCUM,PRES,ADD
NALL
EALL
NSEL,S,NODE,,102,1120,1018
SF,ALL,PRES,680.89
SFCUM,PRES,ADD
NALL
EALL
NSEL,S,NODE,,102,1118,1016
SF,ALL,PRES,683.38
SFCUM,PRES,ADD
NALL
EALL
NSEL,S,NODE,,1116,1118,2
SF,ALL,PRES,685.87
SFCUM,PRES,ADD
NALL
EALL
NSEL,S,NODE,,100,1116,1016
SF,ALL,PRES,688.36
SFCUM,PRES,ADD
NALL
EALL
NSEL,S,NODE,,65,100,35
SF,ALL,PRES,690.12
SFCUM,PRES,ADD
NALL
EALL
NSEL,S,NODE,,65,1113,1048
SF,ALL,PRES,692.54
SFCUM,PRES,ADD
```

```
NALL
EALL
NSEL,S,NODE,,62,1113,1051
SF,ALL,PRES,694.96
SFCUM,PRES,ADD
NALL
EALL
NSEL,S,NODE,,62,1110,1048
SF,ALL,PRES,697.38
SFCUM,PRES,ADD
NALL
EALL
NSEL,S,NODE,,59,1110,1051
SF,ALL,PRES,699.80
SFCUM,PRES,ADD
NALL
EALL
NSEL,S,NODE,,59,1107,1048
SF,ALL,PRES,702.22
SFCUM,PRES,ADD
NALL
EALL
NSEL,S,NODE,,56,1107,1051
SF,ALL,PRES,704.64
SFCUM,PRES,ADD
NALL
EALL
NSEL,S,NODE,,56,1104,1048
SF,ALL,PRES,707.06
SFCUM,PRES,ADD
NALL
EALL
NSEL,S,NODE,,53,1104,1051
SF,ALL,PRES,709.48
SFCUM,PRES,ADD
NALL
EALL
NSEL,S,NODE,,53,1101,1048
SF,ALL,PRES,710.76
SFCUM,PRES,ADD
NALL
EALL
NSEL,S,NODE,,50,1101,1051
SF,ALL,PRES,712.04          ! Bottom of Bottom Basket
SFCUM,PRES,ADD
NALL
EALL
NSEL,S,LOC,X,0,1.26
NSEL,R,LOC,Y,-0.45,-0.43
SF,ALL,PRES,2079.5          ! Vertical Pressure from 5 Baskets
SFCUM,PRES,ADD              ! at 54 g's
NALL
EALL
NSEL,S,LOC,X,1.24,2.14
NSEL,R,LOC,Y,-0.45,0.45
SF,ALL,PRES,2079.5
```

```
SFCUM,PRES,ADD
NALL
EALL
NSEL,S,LOC,X,2.12,11.51
NSEL,R,LOC,Y,0.43,0.45
SF,ALL,PRES,2079.5
SFCUM,PRES,ADD
NALL
EALL
SAVE

/COM **** LOAD 3: APPLYING 54g ACCELERATION ****
ACEL,,54              ! Impose 54 g Acceleration
SAVE
FINI

!*****************************************************************
/COM ***************      SOLUTION PHASE      **************
/SOLUTION
NEQIT,50
NSUBST,50
SOLVE
SAVE
FINI

/COM **** POSTPROCESSING ****
/POST1
SET,LAST
/TYPE,ALL,HIDC
/GLINE,ALL,0
RSYS,0
PLNSOL,S,INT
/DSCALE,,20
/REPLOT
NSEL,S,LOC,X,11.49,11.51
NSEL,R,LOC,Y,-0.33,149.63
PRNS,U,X
NALL
EALL
NSEL,S,LOC,X,12.624,12.626
NSEL,R,LOC,Y,146.68,156.01
PRNS,U,X
NALL
EALL
NSEL,S,LOC,X,1.356,11.26   ! Guard Plate
NSEL,R,LOC,Y,141.87,143.39
PRNS,U,Y
NALL
EALL
LPATH,862,873
PRSECT
LPATH,870,874
PRSECT
LPATH,870,875
PRSECT
LPATH,1237,1240
```

```
PRSECT
LPATH,1245,1248
PRSECT
LPATH,1229,1232
PRSECT
LPATH,1209,1211
PRSECT
LPATH,1200,1202
PRSECT
LPATH,1284,1263
PRSECT
LPATH,1261,1291
PRSECT
LPATH,100,101
PRSECT
LPATH,116,117
PRSECT
LPATH,130,132
PRSECT
LPATH,150,152
PRSECT
LPATH,277,279
PRSECT
LPATH,50,52
PRSECT
LPATH,9,49
PRSECT
LPATH,6,46
PRSECT
LPATH,4,44
PRSECT
LPATH,1,41
PRSECT
SAVE
```

COMPUTER RUN COVER SHEET

Project Number:	KH-8009-8
Computer Code:	ANSYS®-PC
Software Version:	5.0A
Computer System:	MS-DOS, Pentium® Processor
Computer Run File Number:	KH-8009-8-03
Unique Computer Run Filename:	FINE.out
Run Description:	MCO Bottom End Drop w/ Fine Mesh
Run Date / Time:	3 April 1997 8:12:20 PM

Prepared By: Zachary G. Sargent Date 4/18/97

Checked By: Joe Nichols Date 4/17/97

This document was too large to scan as a whole document, therefore it required breaking into smaller sections.

Document number: SD-SNF-DR-003

Section 2 **of** 3

Title: Multi-Canister Overpack Design Report

Date: 6/9/97 **Revision:** A000

Originator: Smith KE
Co: WESH

Recipient:
Co:

References: EDT-620106

PARSONS	CALCULATION PACKAGE	FILE NO: KH-8009-8-04 DOC NO: HNF-SD-SNF-DR-003, Rev 0, Appendix 6 PAGE 1 of 90

PROJECT NAME: MCO Final Design

CLIENT: Duke Engineering Services Hanford, Inc.

CALCULATION TITLE:

STRESS ANALYSIS OF THE LIFTING CAP AND CANISTER COLLAR

PROBLEM STATEMENT OR OBJECTIVE OF CALCULATION:

PERFORM A STRESS ANALYSIS OF THE LIFTING CAP AND CANISTER COLLAR IN ACCORDANCE WITH REVISION 3 OF THE MCO PERFORMANCE SPECIFICATION. CRITERIA ARE BASED ON ANSI N14.6 AND THE ASME CODE.

DOCUMENT REVISION	AFFECTED PAGES	REVISION DESCRIPTION	PREPARED BY INITIALS / DATE	CHECKED BY INITIALS / DATE	APPROVED BY INITIALS / DATE
0	1-90	Initial Issue	Zachary Sargent Pages 1-35 ~~Pages 46-73~~ 4/18/97 Bob Winkel Pages 36-45 Pages 74-90 Bob Winkel BW 4/18/97	Joe Nichols Pages 1-35 Pages 46-73 JW 4/17/97 Ward Ingles Pages 36-45 Pages 74-90 Ward Ingles by Charles Temus 4/18/97	Charles Temus 4/18/97 CT 4/18/97

CONTENTS

	Page
CONTENTS	2
LIST OF TABLES	3
LIST OF FIGURES	3
APPENDICES	4
1. INTRODUCTION	5
2. REFERENCES	5
3. ASSUMPTIONS	6
4. GEOMETRY	6
5. MATERIAL PROPERTIES	12
6. ACCEPTANCE CRITERIA	13
6.1 LIFTING LOADS	13
6.2 PRESSURE LOADS	13
6.3 WELD	14
7. LOAD CONDITIONS & COMBINATIONS	14
8. STRESS ANALYSIS - HAND CALCULATIONS	14
8.1 LIFTING LOAD	15
8.2 PRESSURE LOAD	16
8.3 LIFTING AND PRESSURE LOADS	17
9. ANSYS© ANALYSIS	18
9.1 STRESS ANALYSIS	22
10. DETAILED THREAD/CLOSURE EVALUATION	36
10.1 ANALYSIS DISCUSSION	36
10.2 ANALYSIS RESULTS	38
10.3 THREAD/CLOSURE ANALYSIS CONCLUSIONS	39

LIST OF TABLES

	Page
Table 1: ASME Code Material Properties for Type 304L Stainless Steel	12
Table 2: Level A Allowables	14
Table 3: Canister Collar Thread Relief Hand Calculation Results	17
Table 4: Hand vs. ANSYS Results	27
Table 5: ANSYS Results -- Pressure + Lifting	27
Table 6: ANSYS Results – Pressure + Lifting with Modifications	28
Table 7: ANSYS Models Stress Report Sections	29

LIST OF FIGURES

	Page
Figure 1: Lifting Cap Top View	7
Figure 2: Lifting Cap With Gripping Shoe Configuration	8
Figure 3: Lifting Cap Cross Section	9
Figure 4: Canister Collar Cross Section	9
Figure 5: Modified Lifting Cap	10
Figure 6: Lifting Cap-Canister Collar Interface	11
Figure 7: Oblique and Isometric Views of ANSYS© model	19
Figure 8: Oblique and Isometric Views of ANSYS Model with Modified Cap	20
Figure 9: Detail of ANSYS Model Modified Cap	21
Figure 10: Top View of ANSYS© model With Boundary Conditions	22
Figure 11: ANSYS© Model With Boundary Conditions	23
Figure 12: ANSYS Model with Modified Cap and Boundary Conditions	24
Figure 13: ANSYS© Model Lifting Area	26
Figure 14: Stress Intensities -- Front View	30
Figure 15: Stress Intensities -- Back View	31

Figure 16: Stress Intensities --Top View 32
Figure 17: Stress Intensities in Lifting Ear 33
Figure 18: Front and Back ANSYS Model with Modified Cap and Stress Intensities 34
Figure 19: ANSYS Model Stress Intensity Details—Top View and Center 35
Figure 20: Thread Detail Geometry 40
Figure 21: Finite Element Model of MCO Thread/Closure Region 41
Figure 22. Stress Intensity Contours, Bottom Threads 42
Figure 23. Equivalent Plastic Strain Contours, Bottom Threads 43
Figure 24: Shell Load Distribution at the Closure Threads 44
Figure 25: Radial Displacement Contours, MCO Closure Thread Region 45

APPENDICES

Appendix A: Computer Run Output Sheets & Input File Listings 46

1. INTRODUCTION

The canister collar is welded to the shell to provide a sealing surface for the shield plug seal and has a double lead buttress thread for positioning of the locking ring. After Hot Conditioning of the MCO is completed, a cap (referenced here as the lifting cap) is placed over the shield plug and welded to the canister collar. This cap is designed to accommodate a lifting grapple with six gripping shoes. The cap may be modified to include a rupture disc and cover flange.

This calculation documents the evaluation of the lifting cap with and without modifications, and canister collar under lifting and pressure loads. It also documents the evaluation of the weld at the lifting cap-canister collar interface. The evaluations are performed based on the criteria of the ASME Code and ANSI N14.6. A combination of hand calculations and ANSYS© analysis is used.

2. REFERENCES

1. "Performance Specification for the Spent Nuclear Fuel Multi-Canister Overpack," Specification HNF-S-0426, Revision 3, February 1997

2. ASME Boiler and Pressure Vessel Code, Section II - Materials, Part D - Properties, 1995 Edition with 1995 Addenda.

3. "American National Standard for Radioactive Materials - Special Lifting Devices for Shipping Containers Weighing 10000 Pounds (4500 kg) or More", ANSI N14.6-1993, American National Standards Institute, New York.

4. Roark, Raymond J., & Young, Warren C., "Formulas for Stress and Strain", 5th Edition, McGraw-Hill Book Company, New York, 1975.

5. ASME Boiler and Pressure Vessel Code, Section III, Subsection NG - Material, 1995 Edition with Addenda

6. Duke Engineering & Services Hanford, Inc, Specifications Drawings, Drawing H-2-828042, Sheets 1, 2 and 3, Revision C.

7. Swanson Analysis System, Inc., ANSYS© Engineering Analysis System User's Manual, Volumes I, II and III, Version 5.0A, 23 December 1992.

8. "Buttress Inch Screw Threads- 7°/45° Form With 0.6 Pitch Basic Height of Thread Engagement," ANSI B1.9 - 1973, American Society of Mechanical Engineers, New York, New York.

9. Green, R. E. and McCauley, C. J., Machinery's Handbook, 25th Edition, Industrial Press, New York, New York, 1996.

3. ASSUMPTIONS

1. Pressure is applied uniformly
2. Others as noted

4. GEOMETRY

Figures 1 through 6 show the primary components analyzed and their interface.

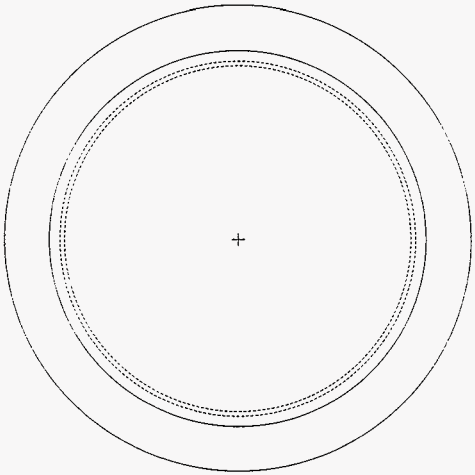

Figure 1: Lifting Cap Top View

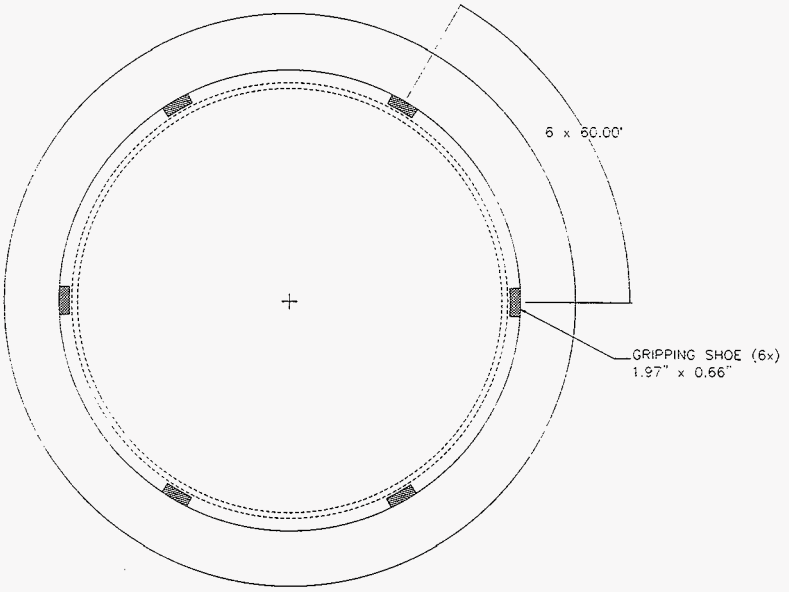

Figure 2: Lifting Cap With Gripping Shoe Configuration

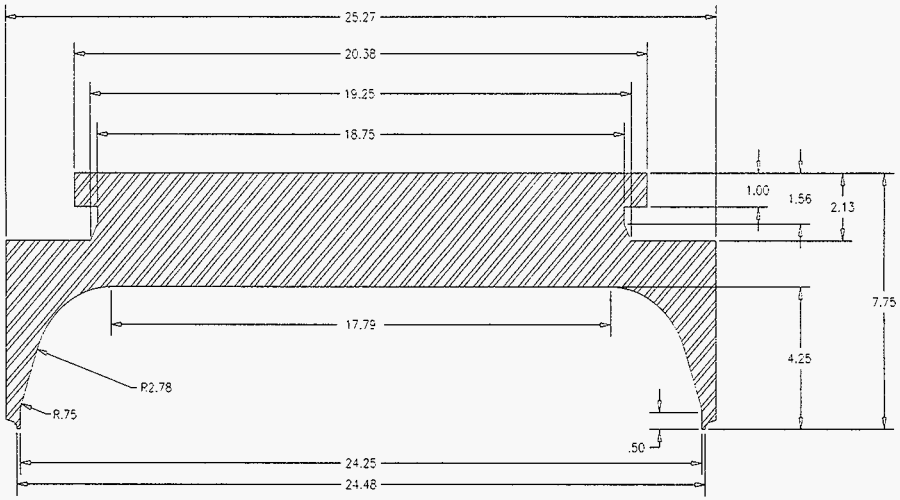

Figure 3: Lifting Cap Cross Section

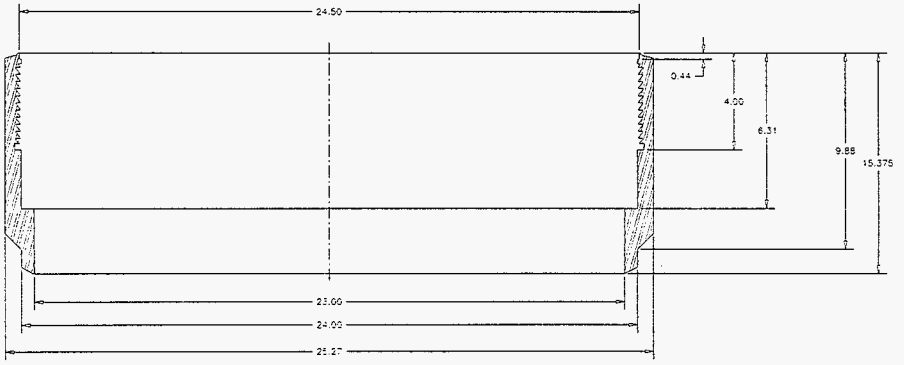

Figure 4: Canister Collar Cross Section

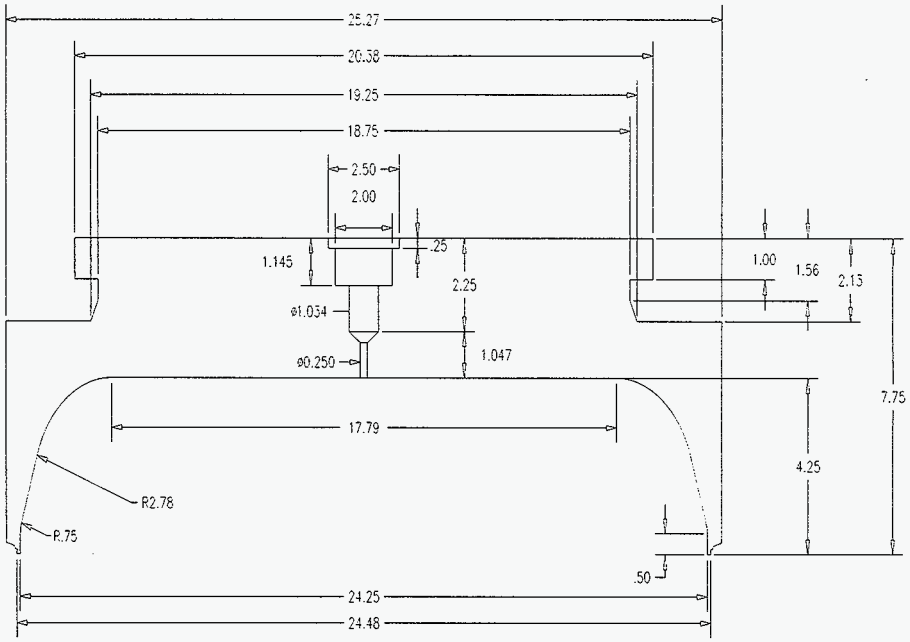

Figure 5: Modified Lifting Cap

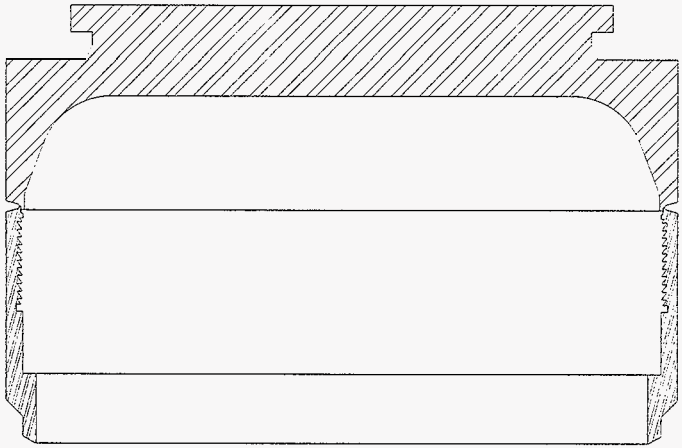

Figure 6: Lifting Cap-Canister Collar Interface

One must note that the interface with the modified lifting cap is the same as shown in Figure 6.

5. MATERIAL PROPERTIES

Both lifting cap and canister collar are fabricated from Type 304L stainless steel. For this analysis, only elastic modulus and allowable stress values are needed. Values are taken from Section II, Part D of the Code (See [2]) and are listed in Table 1.

Table 1: ASME Code Material Properties for Type 304L Stainless Steel

Temperature		E^1	S_y^2	S_m^3	S_u^4
°F	°C	(x 10^6 psi)	(ksi)	(ksi)	(ksi)
-20	-29		25.0	16.7	70.0
70	21	28.3	25.0	16.7	70.0
100	38	28.1[5]	25.0	16.7	70.0
200	93	27.6	21.3	16.7	66.2
270	132	27.2	19.8	16.7	62.5
300	149	27.0	19.1	16.7	60.9
392	200	26.5	17.6	15.9	58.7
400	204	26.5	17.5	15.8	58.5
500	260	25.8	16.3	14.8	57.8
600	316	25.3	15.5	14.0	57.0
700	371	24.8	14.9	13.5	56.2
707	375	24.8	14.9	13.5	56.2
800	427	24.1	14.4	13.0	55.5

[1] Table TM-1, Material Group G, P. 614

[2] Table Y-1, P. 524

[3] Table 2A, P. 322

[4] Table U, P. 441

[5] Underlined values determined by linear interpolation, all others taken from ASME Code, Section II, Part D.

For the lifting cap and canister collar, Type 304L stainless steel may be replaced with Type 304N or 304LN at the discretion of the designer. The effects of thermal conductivity, thermal expansion, minimum yield strength and minimum tensile strength have been evaluated and it is the conclusion of the preparer that by using 304N or 304LN the minimum tensile and yield strengths are increased to 70 ksi and 30 ksi, respectively, for each material, thereby decreasing the appropriate stress ratios of this calculation.

6. ACCEPTANCE CRITERIA

This calculation considers (1) lifting loads and (2) pressure loads. Criteria for each are described below

6.1 Lifting Loads

Per Section 4.11 of the MCO Specification (See [1]), the lifting cap design "shall be capable/configured for lifting the MCO with the same equipment described in Section 4.13." Section 4.13 of [1] describe such equipment as a " lifting ring with a 12 ton lifting capacity." Therefore the lifting cap shall have a lifting capacity of 12 ton. Furthermore " the lifting ring design must exhibit the safety factors (for non-critical lifts) required by the American National Standards Institute (ANSI) N14.6-1986: Special Lifting Devices for Shipping Containers Weighing 10,000 Pounds (4500 kg) or more." For non-critical lifts, Section 4.2.1.1 of N14.6 (See [3]) establishes factors safety of 3 against yield stress and 5 against tensile stress. Thus criteria of N14.6 is equivalent to an allowable stress of the lesser of $S_y/3$ or $S_u/5$. These allowables are applied to the "membrane plus bending" component of stress. At the maximum lifting temperature of 132°C, the allowables are:

$$\frac{S_y}{3} = \frac{19.8\ ksi}{3} = 6.6\ ksi$$
$$\frac{S_u}{5} = \frac{62.5\ ksi}{5} = 12.5\ ksi$$
$$\Rightarrow use: P_m + P_b \le 6.6 \quad ksi$$

6.2 Pressure Loads

Per Section 4.11 of [1], " the cap shall be capable of withstanding the pressure rating of 150 psig at 132°C." The MCO specification does not provide criteria for the lifting cap and canister collar under these loads, thus the normal (Level A) condition criteria of Subsection NG will be used. For membrane and membrane plus bending stresses the allowable stresses of Table 2 are applied.

6.3 Weld

Per Section 4.17 of [1], " All MCO pressure boundary welds and welds bearing the fully loaded MCO must be designed for and pass 100% volumetric examination (x-rays of ultrasonic) per ASME requirements" and " All MCO fabricator pressure boundary welds shall be made in accordance with ASME Section III, Division I, NB-3350". Therefore the stress limits for full penetration groove weld shall not exceed the stress values for the base metal being joined and the allowables of Table 2 apply.

Table 2: Level A Allowables

Temperature		S_m	Design / Level A Stress Limits	
° F	° C	(From Table 1)	P_m (S_m)	(P_m or P_L) + P_b (1.5S_m)
270	132	16.7 ksi	16.7 ksi	25.1 ksi

Note: Design & Level A stress limits for NG-3221 & NG-3222, respectively.

7. LOAD CONDITIONS & COMBINATIONS

The MCO lifting cap and canister collar are evaluated for the following case:

1. Lifting of the MCO and contents while at 132°C and 150 psig. This loading is evaluated using criteria based on the safety factors incorporated in ANSI N-14.6 for the lifting cap. The canister collar and the weld at the cap-collar interface are evaluated using Subsection NG.

8. STRESS ANALYSIS - HAND CALCULATIONS

The lifting cap and canister collar are evaluated using hand calculations. Since there are no practical hand calculations that may verify the stresses incurred in the lifting ear due to lifting, the following sections (8.1 thru 8.3) are merely a proof that the pressure and lifting loads were applied properly in the ANSYS© analysis. The analysis is described in the

following sections.

8.1 Lifting Load

The lifting cap must support the total weight of the MCO and contents for lifting. Per Section 4.13 of [1], the lifting cap must also have a total lifting capacity of 12 ton (24,000 lb.). A lifting grapple with six (6) gripping shoes will be used to lift the MCO and its contents by the lifting cap. Figure 2 displays the gripping shoe configuration for the lifting grapple - lifting cap interface. The analysis presented here will cover only a 60° sector (360°/6 shoes).

Each gripping shoe will carry a weight W of

$$P = \frac{24000lb}{6} = 4000 \text{ lbs}$$

The outer diameter of the MCO shell is 24.00 in. and the inner diameter is 23.00 in. Therefore the cross sectional area of the shell is

$$A_{shell} = \frac{\pi\left(D_o^2 - D_i^2\right)}{4} = \frac{\pi\left(24.00^2 - 23.00^2\right)}{4}$$

$$A_{shell} = 36.92 \text{ in}^2$$

and the area of the section is

$$A_{section} = \frac{36.92in^2}{6} = 6.16 \text{ in}^2$$

Therefore the stress through the shell due to the lifting load is

$$\sigma_L = \frac{P}{A_{section}} = \frac{4000}{6.16} = 649 \text{ psi}$$

The thinnest point in the shell is located at the thread relief in the canister collar. Since it will also see the lifting load through its section, it is analyzed.
The outer diameter of the MCO shell at the canister collar is 25.27 inches and the inner diameter at the base of the threads is 24.572 inches. The cross-sectional area of the shell through that section is

$A_{collar} = 27.32 \text{ in}^2$

and the area of the section is

$A_{collar\ section} = 4.55 \text{ in}^2$

Therefore the stress through the canister collar due to the lifting load is

$$\sigma_{collar} = \frac{P}{A_{collar\ section}} = \frac{4000}{4.55} = 879 \text{ psi}$$

8.2 Pressure Load

As stated in Section 6.2 above, the lifting cap must be able to withstand an internal pressure of 150 psig. The MCO shell has a thickness of 0.5 in. and its inside diameter is 23.00 in. The stress through the shell due to the pressure load is then

$$\sigma_P = \frac{pR}{t}$$

where p = internal pressure = 150 psig

R = mean radius = (24.00+23.00)/4 = 11.75 in.

t = thickness of MCO shell = 0.5 in.

Therefore

$$\sigma_P = \frac{(150)(11.75)}{0.50} = 3525 \text{ psi or } 3.53 \text{ ksi}$$

At its thinnest point, the shell has a thickness of 0.349 inches (with tolerancing) at the canister collar buttress thread relief. The stress through the collar due to the pressure is then:

R = (25.27+24.572)/4 = 12.46 in.

$$\sigma_P = \frac{(150)(12.46)}{0.349} = 5355 \text{ psi of } 5.36 \text{ ksi}$$

8.3 Lifting and Pressure Loads

When both lifting and pressure loads are applied together, the stress through the shell due to these loads then becomes

$$\sigma_{L+P} = \frac{pR}{2t} + \frac{P}{A_{section}} + \frac{pR}{t}$$

$$\sigma_{L+P} = 1763 + 649 + 3525 = 5937 \text{ psi}$$

The stress through the thinnest point, due to lifting and pressure, in the collar becomes

$$\sigma_{THINNEST} = \frac{pR}{2t} + \frac{P}{A_{COLLARSECTION}} + \frac{pR}{t}$$

$$\sigma_{THINNEST} = 2678 + 879 + 5355 = 8912 \text{ psi}$$

Since the allowed stress is 25.1 ksi, the stress ratio is, as shown in Table 3, 0.36. Since the weld at the collar-lifting cap interface can bo no deeper than 0.349 inches, and is subject to Subsection NG of the ASME, t

Table 3: Canister Collar Thread Relief Hand Calculation Results

Stress	Stress Category	Allowed	Section 8 Results	Ratio
σ_L	P_M	16.7 ksi	879 psi	0.05
σ_{HOOP}	P_M	16.7 ksi	5355 psi	0.32
σ_{L+P}	P_M	16.7 ksi	8912 psi	0.53

$$\text{Ratio} = \frac{Result}{Allowed}$$

Table 3 is a compilation of hand calculation results of Section 8.1 through 8.3 for the thinnest section at the canister collar.

9. ANSYS© ANALYSIS

In addition to the hand calculations described in Section 8, an evaluation of the lifting cap and canister is performed using the finite element model shown in Figure 7. The model is a 3-D, 60° section and is developed with SOLID45 elements with 3 degrees of freedom at each node. Figure 7 offers 2 views of the section for better viewing.

Furthermore, a modified version of the lifting cap is also evaluated using ANSYS.

The model is a 3-D, 60° section and is developed with SOLID45 elements with 3 degrees of freedom at each node. The modifications consists of a hole with chamfers to accommodate a rupture disc and cover flange, located at the center of the lifting cap. Figure 5 is a drawing with dimensions of such model. Figure 8 offers 2 views of the section for better viewing. Figure 9 offers a close-up of the lifting cap modifications.

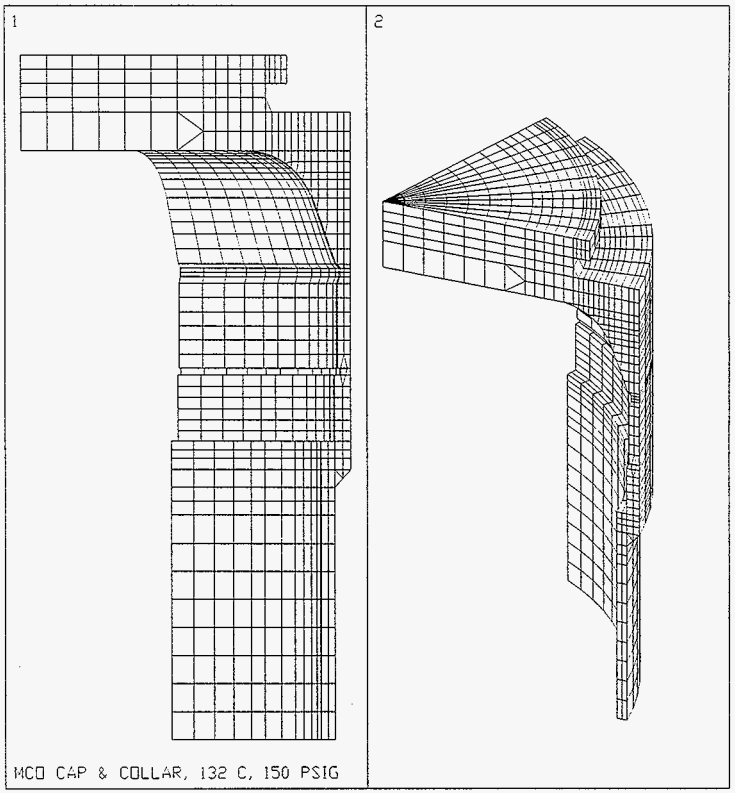

Figure 7: Oblique and Isometric Views of ANSYS© model

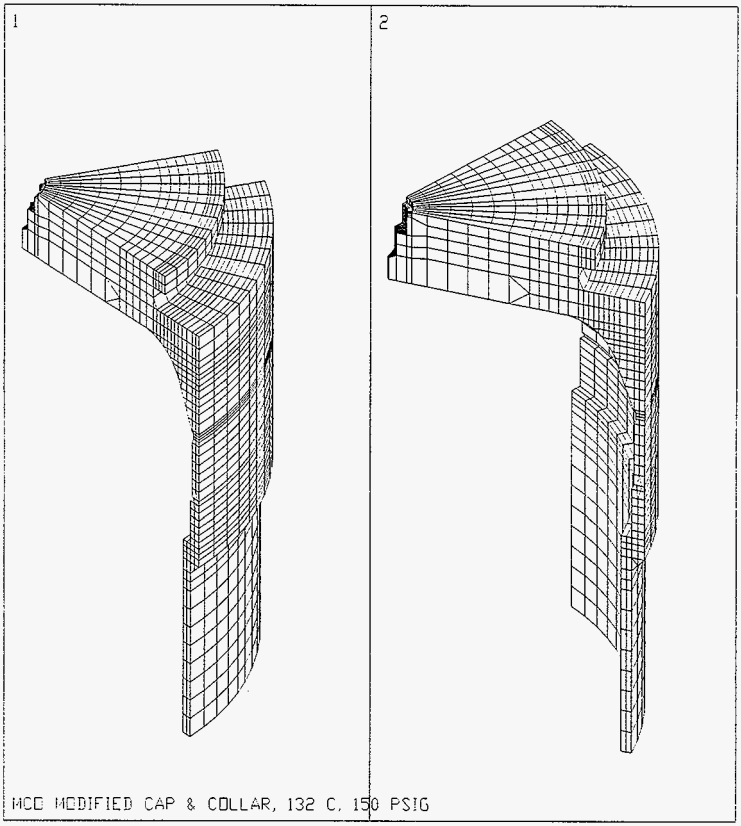

Figure 8: Oblique and Isometric Views of ANSYS Model with Modified Cap

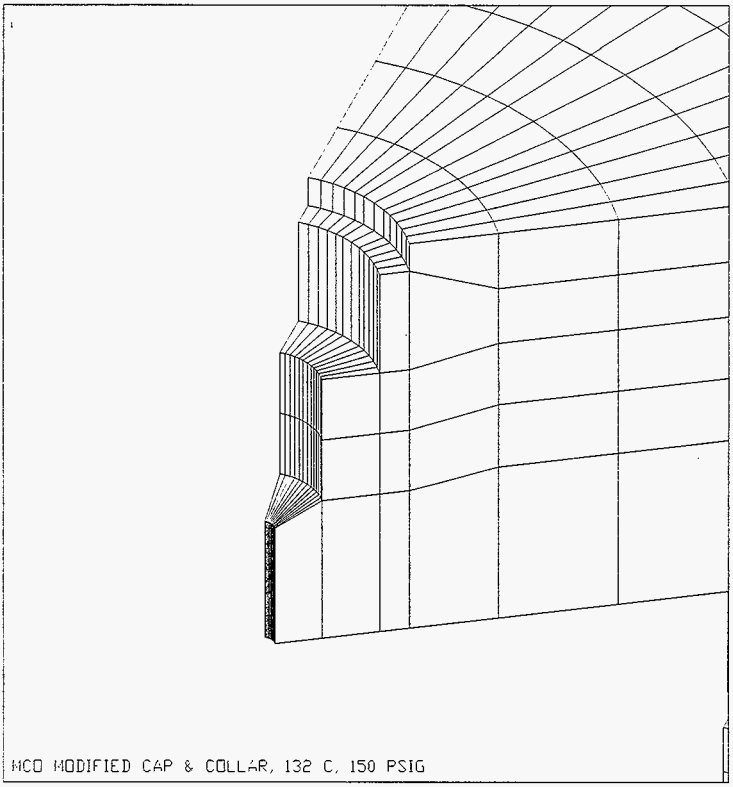

Figure 9: Detail of ANSYS Model Modified Cap

9.1 Stress Analysis

9.1.1 Boundary Conditions

A 60° section of the lifting cap and canister collar is modeled using ANSYS 5.0A Finite Element Analysis. Symmetry boundary conditions are applied at the edges of the models (See Figures 8 & 9 for lifting cap without modifications and Figures 10 & 11 for lifting with modifications). The bottom edge is fixed in the vertical direction to approximate the lifting configuration.

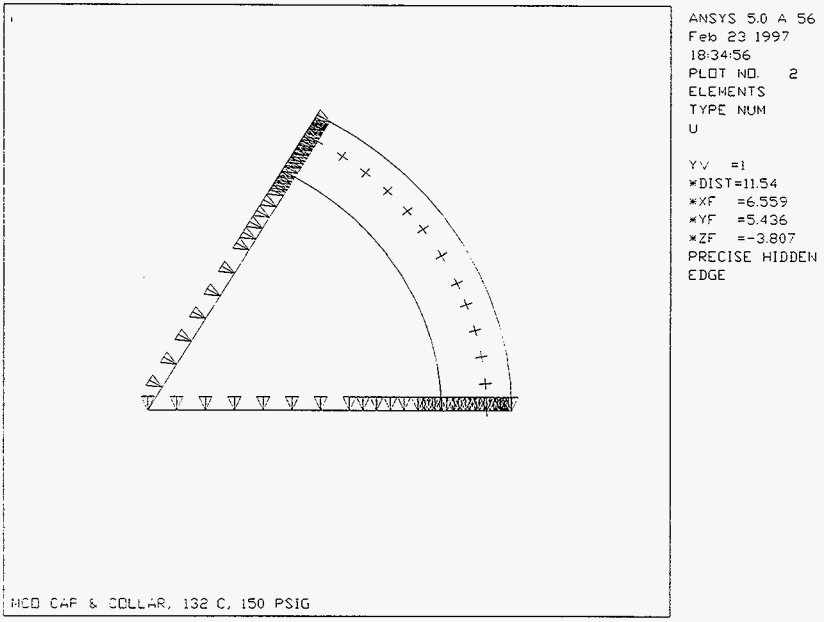

Figure 10: Top View of ANSYS© model With Boundary Conditions

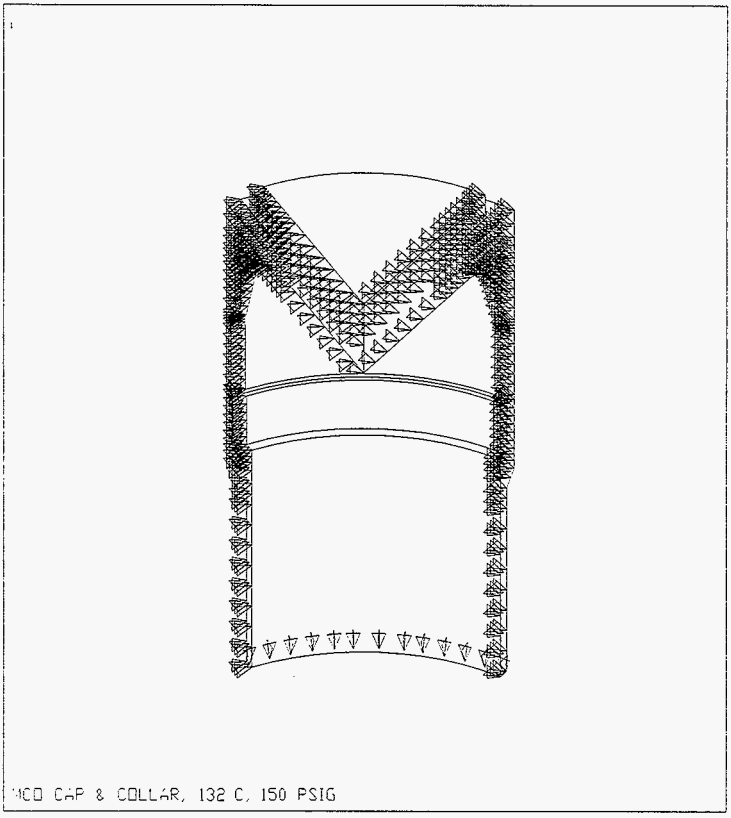

Figure 11: ANSYS© Model With Boundary Conditions

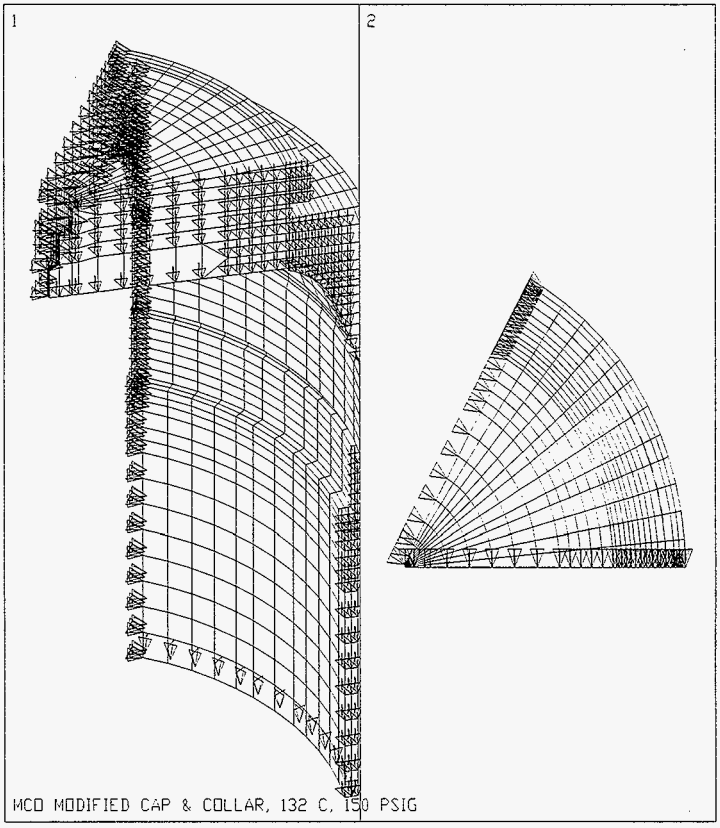

Figure 12: ANSYS Model with Modified Cap and Boundary Conditions

9.1.2 Loading

Two loads are applied to the models. A 150 psi pressure is applied uniformly to the inside of the model . In order to apply the lifting load properly, the model is built using a series of slices of different thicknesses and refining the mesh in the appropriate area. The intent of this is to apply the lifting load on few elements which represent the area of a gripping shoe. Per Section 4.13 of [1] "The shield plug shall feature an integrally machined axisymmetric lifting ring with a 12 ton lifting capacity when gripped with six equally spaced 1.97" tangential length by 0.66" radial contact length grippers". The area of the gripper is approximated to be 1.3 in^2 (1.97" x 0.66"). Figure 13 shows the six elements representing that area. Since the griping shoe has an area of 1.3 in^2, the total load F applied for the 60° section is

$$A_{shoe} = 1.3 \text{ in}^2$$

$$P = 4000 \text{ lbs (See Section 8.1)}$$

$$F = \frac{P}{A_{shoe}} = \frac{4000}{1.3} = 3077 \text{ psi}$$

Since this pressure was applied on six elements of unequal areas, it is necessary to adjust the pressure accordingly. Two faces equal 0.4428 in^2 (0.2214 in^2 each), two more equal 0.4332 in^2 (0.2166 in^2 each), and finally two at 0.4234 in^2 (0.2117 in^2). The two outermost faces will receive each:

$$P_o = \frac{(.2166)}{(.2214)} \times (3077) = 3010 \text{ psi}$$

The two center faces will receive each:

$$P_c = \frac{(.2166)}{(.2166)} \times (3077) = 3077 \text{ psi}$$

and the two innermost faces will receive each:

$$P_i = \frac{(.2166)}{(.2117)} \times (3077) = 3148 \text{ psi}$$

Review of the stress analysis output file show that the reported reaction forces in the Z-direction for the lifting load only is 3997.10 lb for cap without modifications and 3998.80 lb

for cap with modifications. This is comparable to the value of 4000 lb. given above.

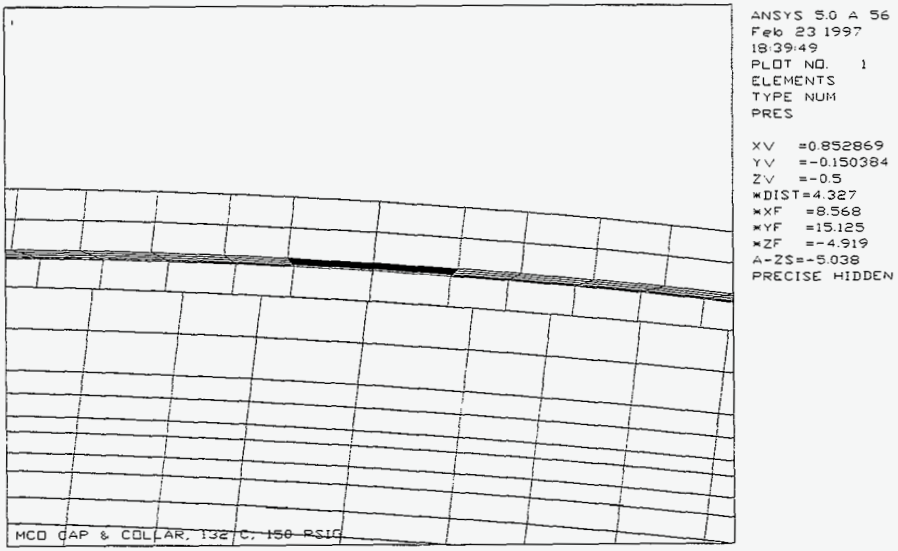

Figure 13: ANSYS© Model Lifting Area

9.1.3 Results

The SOLID45 elements used for this analysis report stresses at the location of the gripping shoe, at the canister collar-lifting cap weld and at the rupture disc location. Stresses are classified as membrane plus bending stresses: $P_m + P_B$. Since ANSI standards limits these stresses to membrane plus bending, peak stresses are ignored.

Table 4 compares the calculated results of Sections 8.1 thru 8.3 to the ANSYS analysis results. ANSYS results were obtained using LPATH/PRSECT command. Stress results for several locations on the assembly are summarized and ratioed to the allowables in Tables 5 and 6.

Table 4: Hand vs. ANSYS Results

Stress	Stress Category	Allowed	Section 8 Results	ANSYS Results	Ratio	ANSYS Results (modified cap)	Ratio (modified cap)
σ_L	P_M	16.7 ksi	649 psi	637.6 psi	0.04	637.9 psi	0.04
σ_{Hoop}	P_M	16.7 ksi	3525 psi	3380 psi	0.20	3380 psi	0.20
σ_{L+P}	P_M	16.7 ksi	2412 psi	2303 psi	0.14	2271 psi	0.14

$$\text{Ratio} = \frac{ANSYS}{Allowed}$$

Table 5: ANSYS Results -- Pressure + Lifting

Location	Criteria	Stress Intensities		Ratio
		Maximum	Allowed $P_M + P_B$	
Lifting Ear	ANSI N14.6	5.84 ksi	6.6 ksi	0.88
Lifting Cap Mid-Radius	ANSI N14.6	2.25 ksi	6.6 ksi	0.34
Weld	ASME Section NG	7.32 ksi	25.1 ksi	0.29
Bottom of Collar[6]	ASME Section NG	5.24 ksi	25.1 ksi	0.21

[6] Although it is non-conservative to include pressure, the effect is small

Table 6: ANSYS Results – Pressure + Lifting with Modifications

Location	Criteria	Stress Intensities		Ratio
		Maximum	Allowed $P_M + P_B$	
Lifting Ear	ANSI N14.6	5.85 ksi	6.6 ksi	0.89
Lifting Cap Mid-Radius	ANSI N14.6	2.20 ksi	6.6 ksi	0.33
Weld	ASME Section NG	7.09 ksi	25.1 ksi	0.28
Bottom of Collar[7]	ASME Section NG	5.21 ksi	25.1 ksi	0.21

On April 1,1997, the dimensions for the locking ring were revised. The most significant dimension change is increasing the reduction of the lifting ring thickness on the locking ring to 1.00 +0/-0.02 inches. This reduction would increase the stress ratio to 0.924. Although technically acceptable, increasing the stress ratio and reducing the margin on the MCO is not recommended. If other alternatives are available they should be investigated.

[7] Although it is non-conservative to include pressure, the effect is small

Table 7: ANSYS Models Stress Report Sections

Component	Inside Node	Outside Node
Top Plate	6002	6132
	6004	6134
	6004	6018
Lifting Ear	6055	6015
	6056	6016
	6704	6700
	6705	6701
	6057	6017
Transition Top Plate to Cylindrical	6128	6096
	6170	6197
	6188	6197
Start Weld	6245	6247
	6255	6257
Below Weld	6285	6297
Bottom of Locking Ring Position	6485	6487
Transition to Collar	6543	6545
Lower collar	6613	6615

For the lifting cap without modifications, the corresponding ANSYS input and output files are NEWCAP.inp and NEWCAP.out, respectively.

For the lifting cap with modifications, the corresponding ANSYS input and output files are MODCAP.inp and MODCAP.out, respectively.

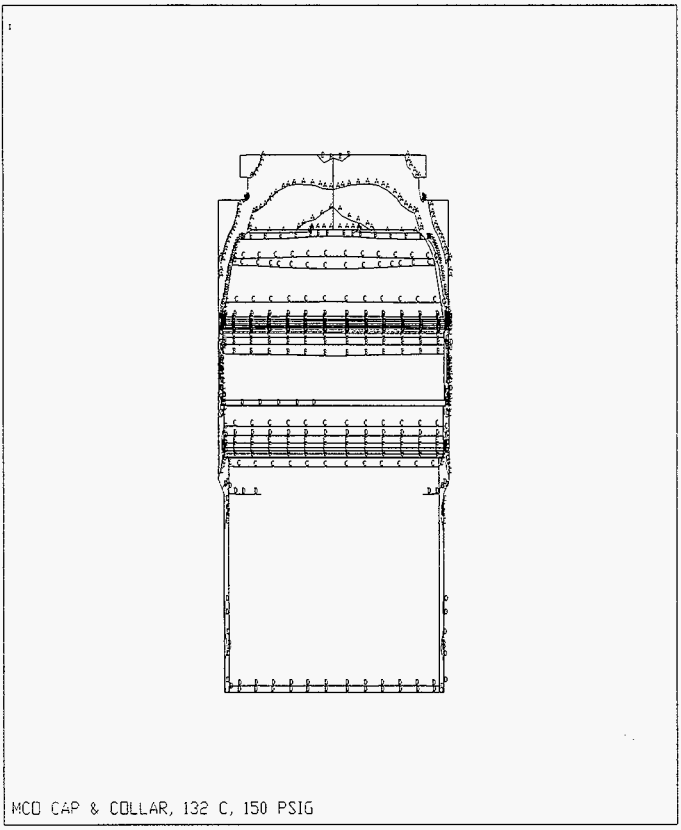

Figure 14: Stress Intensities -- Front View

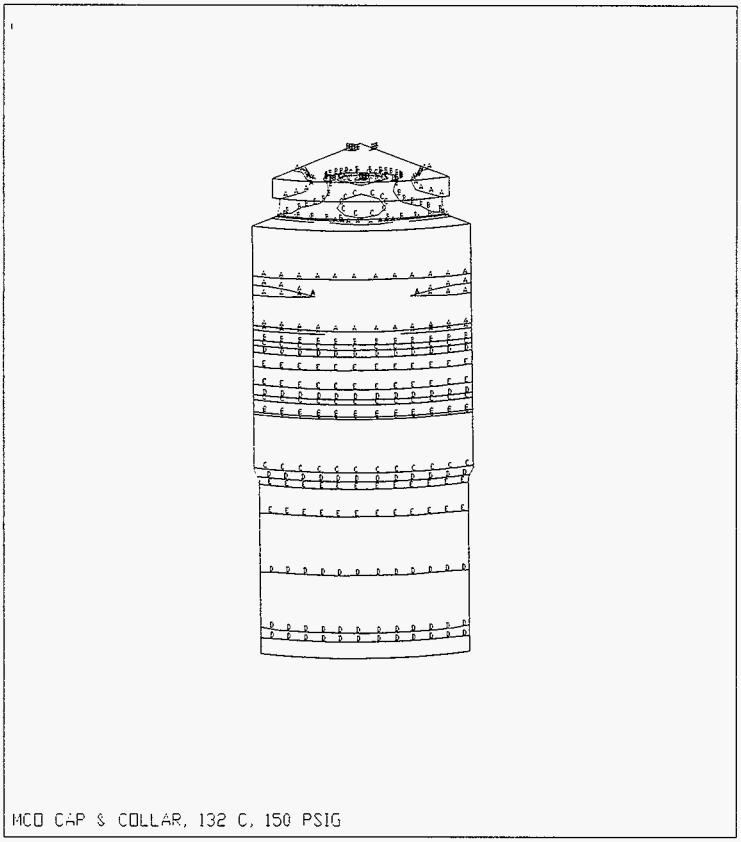

Figure 15: Stress Intensities -- Back View

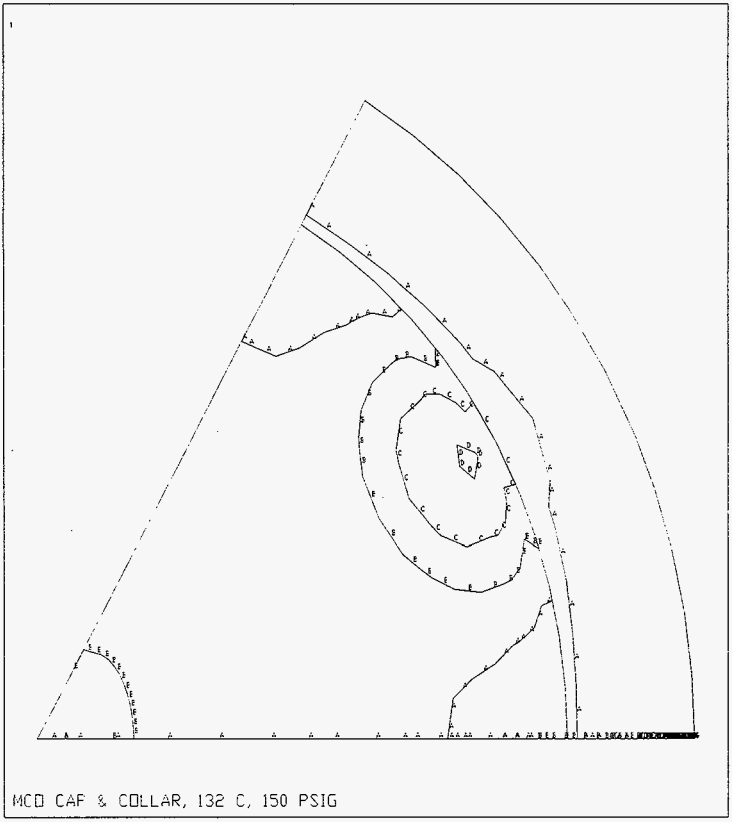

Figure 16: Stress Intensities --Top View

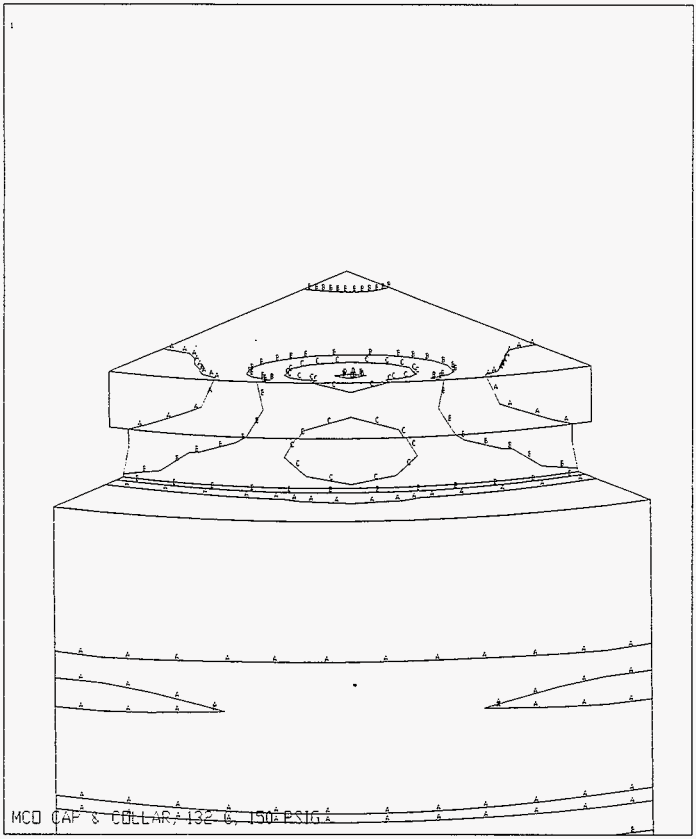

Figure 17: Stress Intensities in Lifting Ear

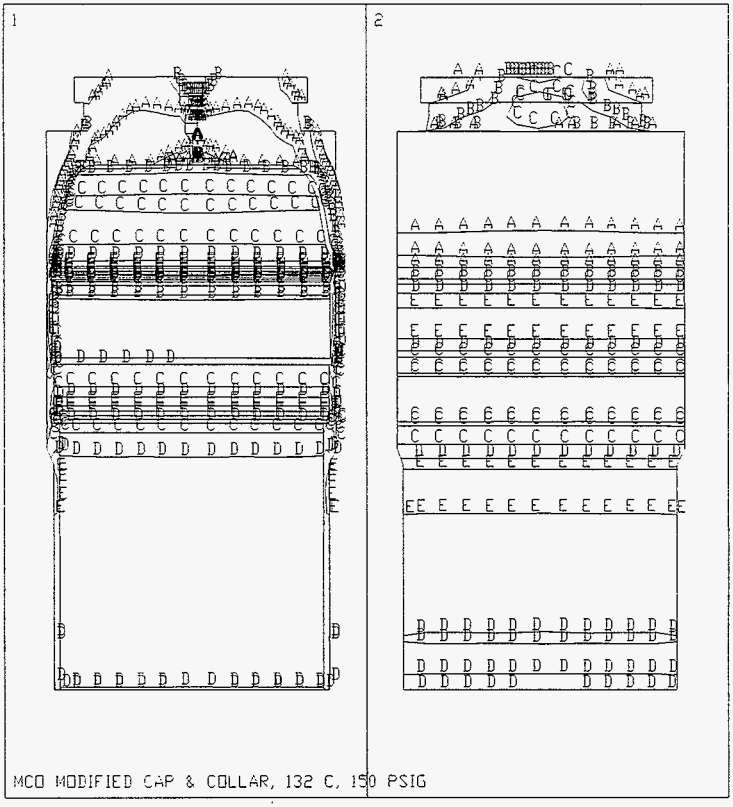

Figure 18: Front and Back ANSYS Model with Modified Cap and Stress Intensities

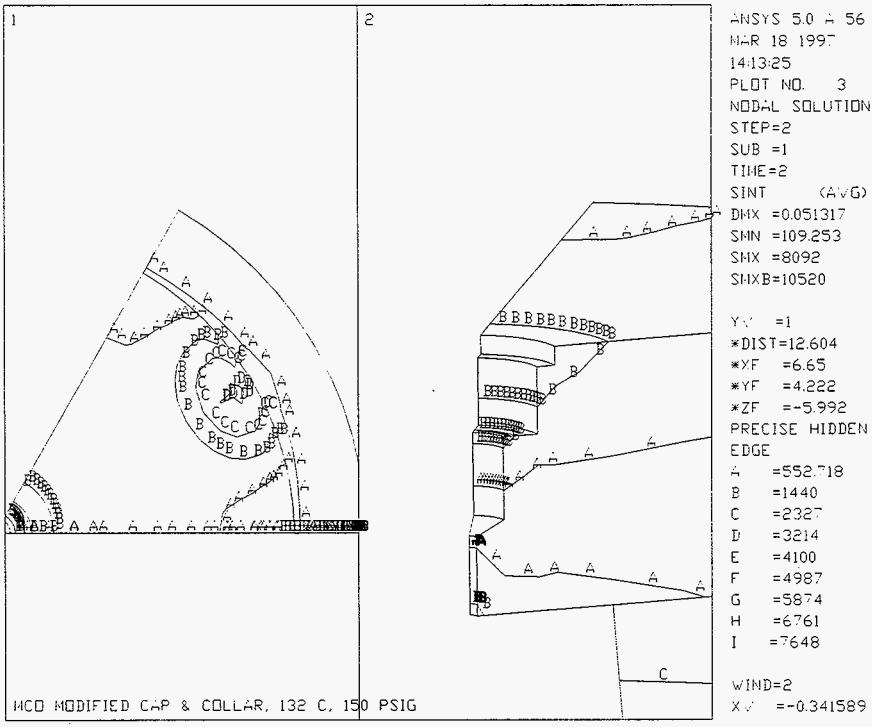

Figure 19: ANSYS Model Stress Intensity Details—Top View and Center

10. DETAILED THREAD/CLOSURE EVALUATION

Due to the importance of the buttress closure threads in providing and maintaining the MCO seal loading, a detailed analysis of the threads and other closure hardware is performed. The detailed analysis approach, results, and conclusions follows below.

10.1 Analysis Discussion

The locking ring thread design involves buttress threads with a specified pitch of 0.25 in. and an engagement length of 2.875 in. The buttress thread design details are shown in Figure 20 and are in conformance with ANSI B1.9 [8]. As an initial check on the thread adequacy for the the bolt loading, thread stripping (thread shear) calculations are performed on the locking ring threads. Since ANSI B1.9 does not specify a formula for external thread stripping area, a conservative approximation from Machinery's Handbook [9] is used. On page 1718 of [9], a stripping/shear area, per inch of engagement, for Acme threads is given as

$$A_s = 3.1416 \cdot D_1 \max[0.5 + n \tan 14.5^\circ (D_2 \min. - D_1 \max)]$$

where, D_1max is the maximum minor diameter of the internal thread and D_2min is the minimum pitch diameter of the external thread.

Conservatively using the minor diameter of the locking ring external threads, and conservatively ignoring the 2nd term inside the brackets, results in the following thread stripping area:

$l_{engage} := 2.875 \cdot in$

$D_{min} := 24.168 \cdot in$

$A_s := \pi \cdot D_{min} \cdot 0.5 \cdot l_{engage}$

$A_s = 109.144 \cdot in^2$

From Appendix 4 (Calculation KH-8009-8-02), the maximum bolt in-service loading is 216,000 lb, resulting in the following thread shear stress (allowable thread stress is $0.6S_m$ per ASME Section III, Subsection NB-3227.2):

$$P_{max} := 216000 \cdot lb$$

$$\tau_s := \frac{P_{max}}{A_s}$$

$$\tau_s = 1.979 \cdot 10^3 \cdot \frac{lb}{in^2}$$

$$S_{m707} := 13500 \cdot \frac{lb}{in^2}$$

$$Ratio := \frac{\tau_s}{0.6 \cdot S_{m707}}$$

$$Ratio = 0.244$$

Thus, the thread stripping area is adequate for the maximum jacking bolt loading.

Although the thread shear area is adequate, preliminary analyses of the shell, immediately below the threads, indicates that the membrane plus bending stresses exceed the material yield strength, for the upper bound preload. Subsection NB-3227.3 of the ASME Code addresses "nonintegral connections", including "screwed in plugs" and "shear ring closures", which are subject to failure "by bell mouthing or other types of progressive deformation". Such failures are addressed in NB-3227.3 by limiting the primary plus secondary stress intensities to the material yield strength. In order to accurately address the primary plus secondary stresses in the vicinity of the threads, a detailed finite element analysis of the thread/closure region is performed.

The failure modes addressed in NB-3227.3 are of a "ratchetting" nature, requiring cyclic loading. Although there will be some cyclic themal loading, the dominant closure load (bolt preload) is not cycled. However, any shell stresses in the closure load path which exceed the material yield strength, raises the concern for seal preload losses. This potential for seal load losses and potential seal leakage is the primary motivation for performing the

detailed thread/closure analysis.

The detailed thread/closure model developed is shown in Figure 21. Contact elements are used at the threads, bolt interface, and seal stop interface. The model is subjected to the following load sequence: (1) The maximum room temperature preload of 190,000 lb (conservative upper bound from Appendix 4). The preload is iteratively obtained using an interference fit at the bolt/shield plug interface. (2) Bolt preload plus 150 psi at 200°C. (3) Bolt preload plus 75 psi at 375°C. Note that the model details focus on the thread region. Other areas are modeled in much less detail, e.g. the shield plug and the locking ring, away from the threads. Also, some minor changes in dimensions occurred after the model was developed. Both the modeling approximations and the dimensional changes are judged to have a small effect on the results. The only boundary constraint is an axial displacement constraint at the bottom of the shell.

To account for nonlinear effects occurring during the load sequence, bilinear plasticity (BKIN) and large displacements (NLGEOM) are both enabled in the ANSYS analysis. Note, from Figure 21, that the full bolt width of 1.5 in. is modeled using axisymmetric ring elements. The full bolt width is used to bound the closure response in a cross section passing through a bolt. To provide the correct bolt stiffness, the elastic modulus of the bolt material is reduced by the ratio of the actual bolt area divided by the bolt ring area. The effective bolt length is assumed to project through the first few bolt threads (0.25 in.).

10.2 Analysis Results

The ANSYS input and output files for the thread/closure analysis are THRD3.inp and THRD3.out, respectively . A summary of the results for the load sequence discussed in Section 10.1 follows below.

The stress/strain state of the thread region following the three step load sequence is summarized in Figure 22 and Figure 23. Note, from Figure 23, that the peak equivalent plastic strain of 0.16% occurs in the thread relief region below the bottom thread. Plastic straining, of lesser magnitude, also occurs in the root of the two bottom threads. This concentration of plastic straining in the bottom threads is anticipated since the thread load progressively diminishes above the bottom thread. The thread loading versus thread number is extracted from the ANSYS output and is provided in Figure 24.

The plastic straining results in an outward movement of the top of the shell which is illustrated in the radial displacement contours provided in Figure 25. Note that the maximum radial displacement (UX) at the top of the shell is nearly one-tenth of an inch (SMX = 0.0908 in.). The shell radial displacement is of concern due to the potential for

thread separation (thread engagement depth ≈ 0.14 in). However, most of this displacement is due to thermal growth ($\alpha*\Delta T*R = 9.69x10^{-6}x637x12.63 = 0.078$ in.). Thus, the relative growth is about 0.091 - 0.078 = 0.013 in., which is about one-tenth of the depth of thread engagement.

The metallic closure seal is positioned next to the seal stop and is not included in the thread/closure model. Since the seal stop is much stiffer than the seal, as long as the seal stop remains in contact with the MCO shell, there will be a negligible change in the seal loading, as indicated by the seal load evaluation presented in Section 12 of Appendix 4. For the maximum preload case considered in this analysis, the seal stop load is reduced by about 30% when the pressure loading is added, but remains in compression (did not gap). This is consistent with Section 12 of Appendix 4 which also reports that the seal stop remains in compression for the "maxbolt" load condition.

10.3 Thread/Closure Analysis Conclusions

Although the upper bound primary plus secondary stress intensities exceed the material yield stress (NB-3227.3 stress limit), a detailed elastic/plastic analysis indicates that the plastic strain magnitudes are small (< 0.2%) and confined to the inside surface near the bottom threads. The corresponding deformations are also relatively small, indicating an adequate margin against thread separation. Concerning the seal loading, the plastic strains associated with the upper bound preload, do not result in gapping at the seal stop. Thus, it is concluded that the thread/closure design is adequate for maintaining the closure seal.

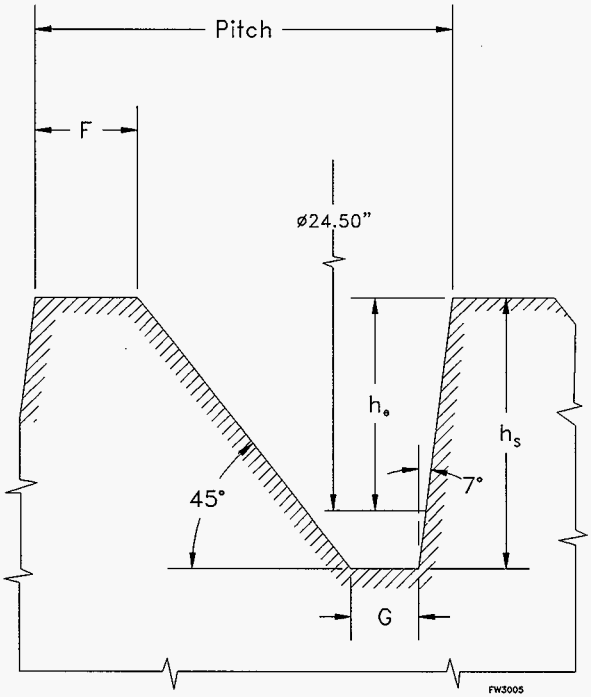

Pitch = 0.25 in h_s = 0.1660 in.

h_e = 0.1410 in. F = 0.04080 in.

G = 0.06115 in.

Figure 20: Thread Detail Geometry

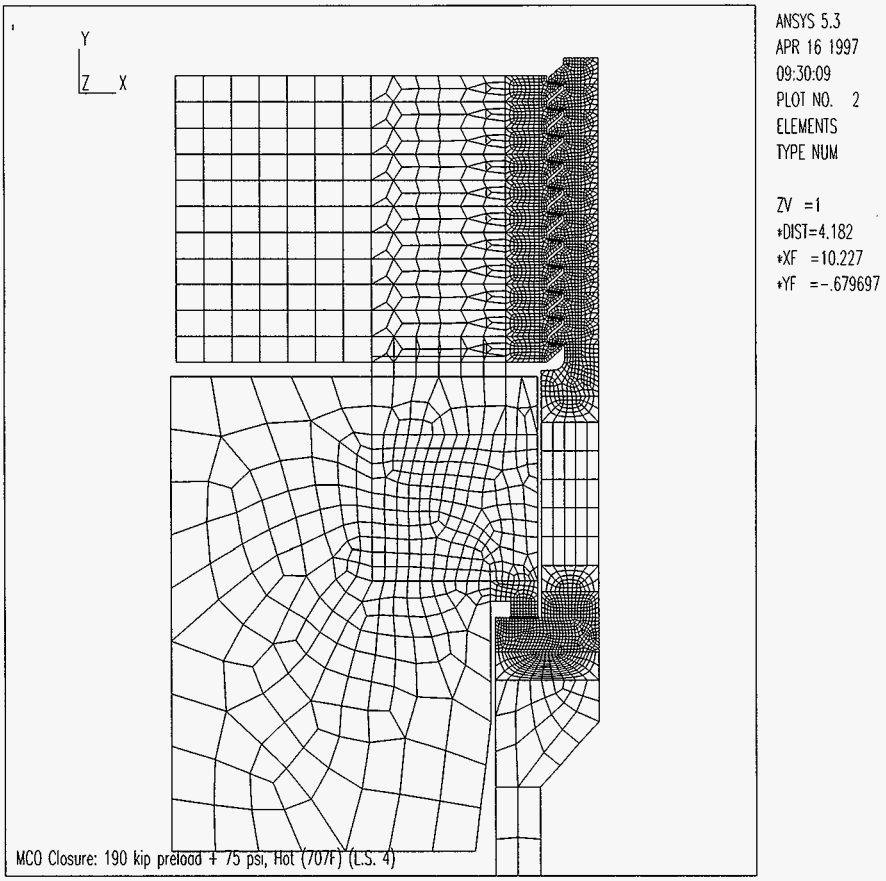

Figure 21: Finite Element Model of MCO Thread/Closure Region

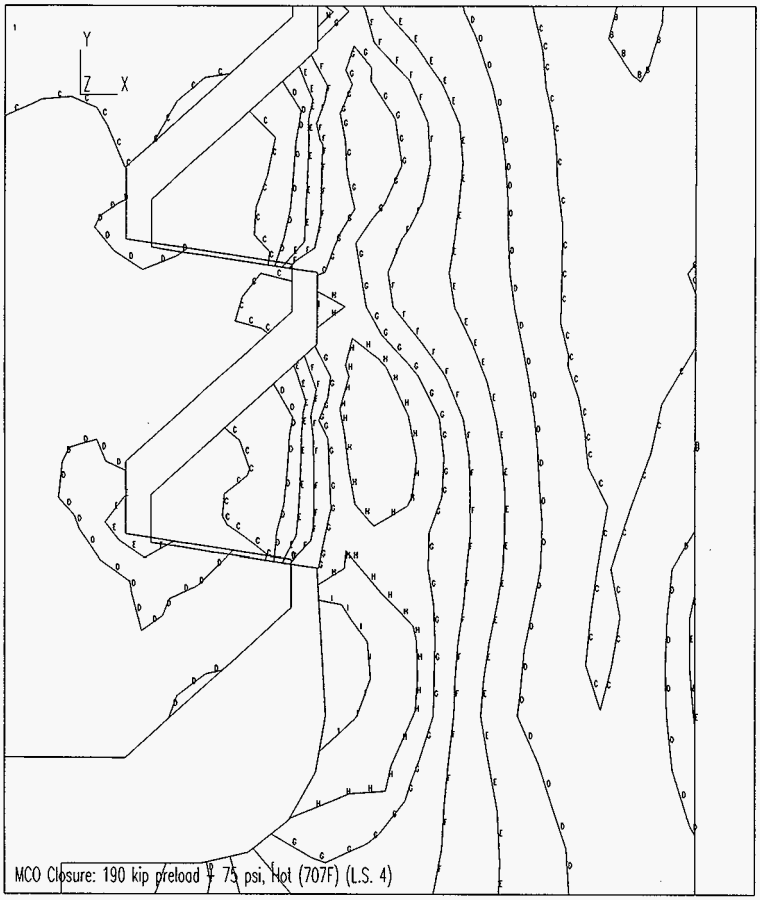

Figure 22. Stress Intensity Contours, Bottom Threads

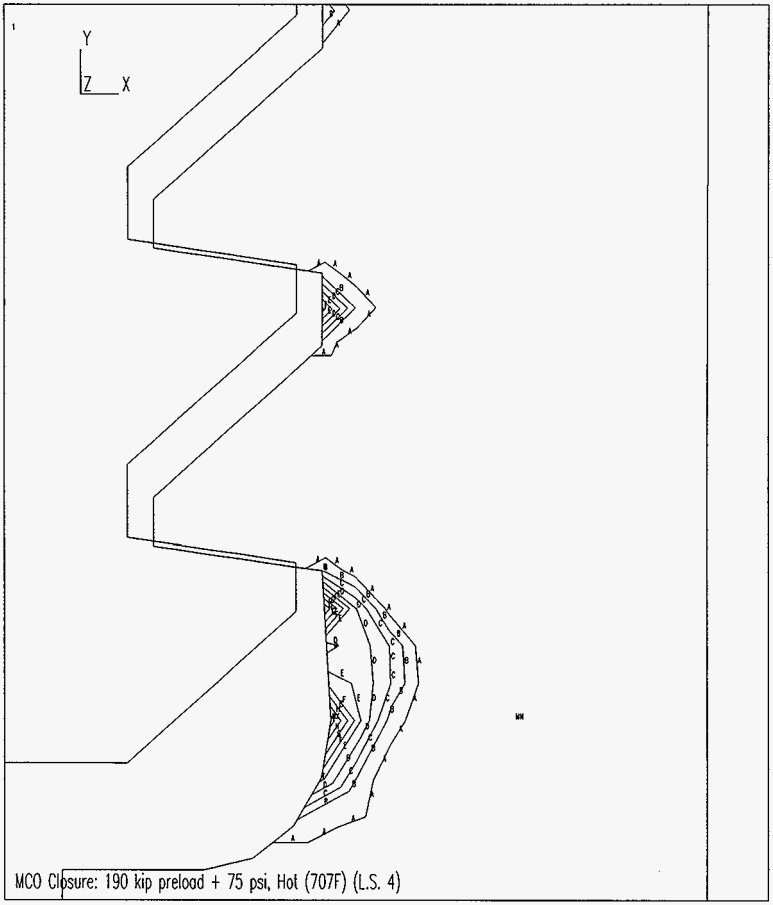

Figure 23. Equivalent Plastic Strain Contours, Bottom Threads

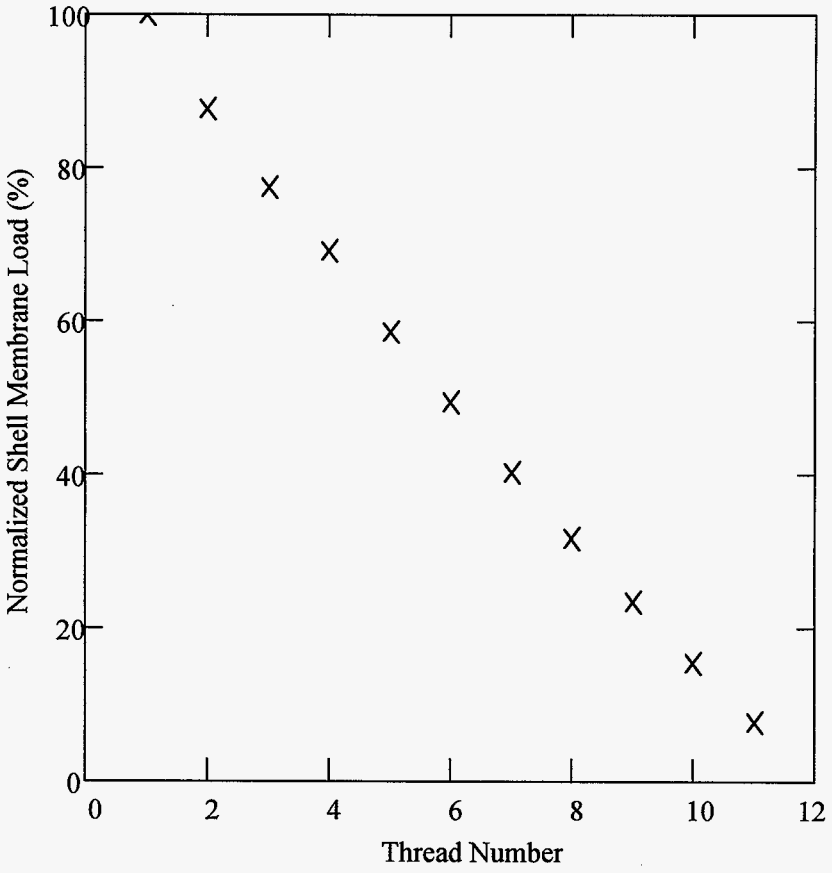

Figure 24: Shell Load Distribution at the Closure Threads

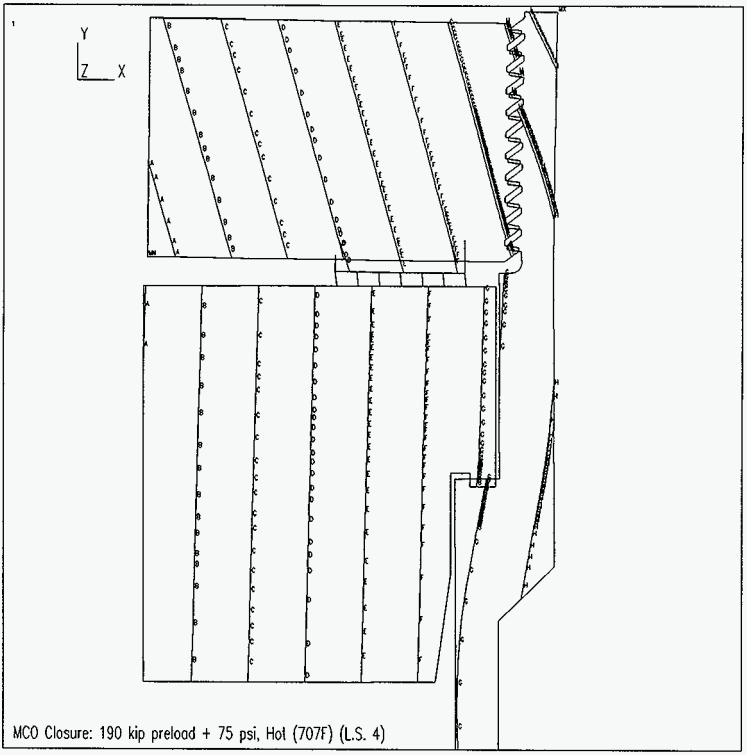

Figure 25: Radial Displacement Contours, MCO Closure Thread Region

Appendix A:

Computer Run Output Sheets

&

Input File Listings

COMPUTER RUN COVER SHEET

Project Number:	KH-8009-8
Computer Code:	ANSYS®-PC
Software Version:	5.0A
Computer System:	MS-DOS, Pentium® Processor
Computer Run File Number:	KH-8009-8-04
Unique Computer Run Filename:	NEWCAP.inp
Run Description:	Stress Analysis of Lifting Cap
Creation Date / Time:	28 March 1997 11:31:54 AM

Prepared By: Zachary G. Sargent — Date: 4/18/97

Checked By: Joe Nichols — Date: 4/17/97

LISTING OF NEWCAP.INP FILE

```
/BATCH,LIST
/FILNAM,NEWCAP
/PREP7
/TITLE,MCO CAP & COLLAR, 132 C, 150 PSIG

/COM         DEFINING TEMPERATURES
TREF,70                        ! REFERENCE TEMPERATURE
TUNIF,270                      ! UNIFORM NODAL TEMPERATURE
!
/COM         DEFINING ELEMENT TYPES
ET,1,SOLID45
!
/COM         DEFINING MATERIAL PROPERTIES
MP,EX,1,30e6                   ! YOUNG'S MODULUS
MP,ALPX,1,1                    ! COEFFICIENT OF THERMAL EXP.
MP,NUXY,1,0.3                  ! POISSON'S RATIO
MP,DENS,1,490/1728             ! WEIGHT DENDITY (490 lb/ft^3),
                                    ! ASSUMED CONSTANT W/ TEMP.
MPTEMP,1,70,100,200,300,400,500        ! TEMPERATURES FOR PROPERTIES
MPTEMP,7,600,650,700,750
!
/COM         ELASTIC MODULI FOR 304L STAINLESS STEEL
MPDATA,EX,1,1,28.3E+06,28.1E+06,27.6E+06,27.0E+06,26.5E+06,25.8E+06
MPDATA,EX,1,7,25.3E+06,25.1E+06,24.8E+06,24.5E+06
!
/COM **** MEAN COEFFICIENTS OF THERMAL EXPANSION (in./in./(F) ****
! SA240 Gr 304L
MPDATA,ALPX,1,1,0,8.55e-06,8.79e-06,9.00e-06,9.19e-06,9.37e-06
MPDATA,ALPX,1,7,9.53e-06,9.61e-06,9.69e-06,9.76e-06
!
/COM         DEFINING LOCAL COORDINATE SYSTEMS
LOCAL,11,1,,,,,90
CSYS,0
!
/COM         DEFINING NODES---LIFTING CAP
/COM         TOP OF LIFTING CAP
N,1,0,16.316
N,7,6,16.316
FILL,1,7
N,10,7,16.316
N,12,7.94,16.316
FILL,10,12
N,15,9.375,16.316
FILL,12,15
N,16,9.53,16.316
N,17,10.19,16.316
N,21,0,15.816
N,27,6,15.816
FILL,21,27
N,30,7,15.816
```

N,32,7.94,15.816
FILL,30,32
N,35,9.375,15.816
FILL,32,35
N,36,9.53,15.816
N,37,10.19,15.816
N,41,0,15.316
N,47,6,15.316
FILL,41,47
N,50,7,15.316
N,52,7.94,15.316
FILL,50,52
N,55,9.375,15.316
FILL,52,55
N,56,9.53,15.316
N,57,10.19,15.316
N,61,0,14.816
N,67,6,14.816
FILL,61,67
N,70,7,14.816
N,72,7.94,14.816
FILL,70,72
N,75,9.375,14.816
FILL,72,75
N,81,0,14.316
N,87,6,14.316
FILL,81,87
N,90,7,14.316
N,92,7.94,14.316
FILL,90,92
N,95,9.375,14.316
FILL,92,95
N,96,9.625,14.316
N,102,11.125,14.316
FILL,96,102
N,103,11.4035,14.316
N,104,11.75,14.316
N,105,12.125,14.316
N,106,12.375,14.316
N,107,12.625,14.316
N,131,0,12.946
N,137,6,12.946
FILL,131,137
N,140,7,12.946
N,142,7.94,12.946
FILL,140,142
N,145,9.375,12.946
FILL,142,145
N,146,9.625,12.946
N,152,11.125,12.946
FILL,146,152
N,153,11.4035,12.946
N,154,11.75,12.946
N,155,12.125,12.946

```
N,156,12.375,12.946
N,157,12.625,12.946
SAVE
FILL,90,140,1,110
FILL,91,141,1,111
FILL,92,142,1,112
FILL,93,143,1,113
FILL,94,144,1,114
FILL,95,145,1,115
FILL,96,146,1,116
FILL,97,147,1,117
FILL,98,148,1,118
FILL,99,149,1,119
FILL,100,150,1,120
FILL,101,151,1,121
FILL,102,152,1,122
FILL,103,153,1,123
FILL,104,154,1,124
FILL,105,155,1,125
FILL,106,156,1,126
FILL,107,157,1,127
N,700,9.75,16.316              ! LIFTING EAR
N,701,9.97,16.316
N,704,9.75,15.316
N,705,9.97,15.316
FILL,700,704,1,702
FILL,701,705,1,703
!
/COM        SIDE OF LIFTING CAP
N,128,9.375,12.8519
N,129,9.625,12.7692
N,130,9.875,12.6589
N,158,10.125,12.5171
N,159,10.375,12.571
N,160,10.625,12.571
N,161,10.875,12.571
N,162,11.125,12.571
N,163,11.4035,12.571
N,164,11.75,12.571
N,165,12.125,12.571
N,166,12.375,12.571
N,167,12.625,12.571
N,169,10.375,12.3375
N,170,10.5687,12.1661
N,171,10.875,12.196
N,172,11.125,12.196
N,173,11.4035,12.196
N,174,11.75,12.196
N,175,12.125,12.196
N,176,12.375,12.196
N,177,12.625,12.196
N,181,10.7726,11.946
N,182,11.125,11.946
N,183,11.4035,11.946
```

```
N,184,11.75,11.946
N,185,12.125,11.946
N,186,12.375,11.946
N,187,12.625,11.946
N,188,11.0198,11.596
N,192,11.125,11.596
N,193,11.4035,11.596
N,194,11.75,11.596
N,195,12.125,11.596
N,196,12.375,11.596
N,197,12.625,11.596
N,202,11.1753,11.296
N,203,11.4035,11.296
N,204,11.75,11.296
N,205,12.125,11.296
N,206,12.375,11.296
N,207,12.625,11.296
N,208,11.3421,10.869
N,209,11.75,10.869
N,210,12.125,10.869
N,211,12.375,10.869
N,212,12.625,10.869
N,213,11.5046,10.4420
N,214,11.75,10.4420
N,215,12.125,10.4420
N,216,12.375,10.4420
N,217,12.625,10.4420
N,219,11.6672,10.0146
N,220,12.125,10.0146
N,221,12.375,10.0146
N,222,12.625,10.0146
N,224,11.8682,9.4866
N,225,12.125,9.4866
N,226,12.375,9.4866
N,227,12.625,9.4866
N,234,12.0691,8.9586
!
/COM        WELD AREA BETWEEN LIFTING CAP & CANISTER COLLAR
N,235,12.125,8.94
N,236,12.375,8.94
N,237,12.625,8.94
N,245,12.225,8.793
N,246,12.375,8.793
N,247,12.625,8.793
N,255,12.225,8.646
N,256,12.375,8.646
N,257,12.625,8.646
!
/COM        CANISTER COLLAR THREADS
N,265,12.225,8.5                ! UPPER OUTER THREADS
N,266,12.375,8.5
N,267,12.625,8.5
N,285,12.125,8.25
N,297,12.625,8.25
```

```
FILL,285,297,1,291
N,305,12.125,7.75
N,317,12.625,7.75
FILL,305,317,1,311
N,405,12.125,5.25
FILL,305,405,4,325          ! LOWER OUTER THREADS
N,410,12.25,5.25            ! LOWER LIFTING CAP
N,391,12.375,5.75
FILL,311,391,3,331
N,416,12.5,5.25
N,417,12.625,5.25
FILL,317,417,4,337
N,430,12.25,5
N,435,12.01,5
N,437,12.625,5
N,445,12.01,4.6
N,447,12.625,4.6
FILL,445,447
FILL,430,437,1,436
N,485,12.01,3
FILL,445,485,3,455
N,487,12.625,3
FILL,437,487,4,447
FILL,485,487,1,486
FILL,446,486,3,456
N,493,11.5,2.63
N,495,12.01,2.63
FILL,493,495
N,497,12.625,2.63
FILL,495,497
N,503,11.5,2.33
N,505,12.01,2.33
FILL,503,505
N,507,12.625,2.33
FILL,505,507
N,513,11.5,2.03
N,515,12.01,2.03
FILL,513,515
N,517,12.625,2.03
FILL,515,517
N,523,11.5,1.63
N,525,12.01,1.63
FILL,523,525
N,527,12.625,1.63
FILL,525,527
N,530,12.318,1.315
N,533,11.5,1
N,535,12.01,1
FILL,533,535
N,553,11.5,0
N,555,12.01,0
FILL,533,553,1,543
FILL,553,555
FILL,534,554,1,544
```

```
FILL,535,555,1,545
N,633,11.5,-8
FILL,553,633,7,563
N,635,12.01,-8
FILL,555,635,7,565
FILL,563,565
FILL,573,575
FILL,583,585
FILL,593,595
FILL,603,605
FILL,613,615
FILL,623,625
FILL,633,635                    ! BOTTOM
SAVE
!
/COM        CHANGING TO LOCAL COORDINATE SYSTEM
CSYS,11
/COM        NODAL GENERATION 60 DEGREE SWEEP
NGEN,5,1000,ALL,,,,-5           ! 5 DEGREE INCREMENTS
NGEN,2,1000,4000,4999,1,,-4.27
NGEN,3,1000,5000,5999,1,,-5.73      ! GRAPPLE SHOE AREA (1.97"X0.66")
NGEN,2,1000,7000,7999,1,,-4.27
NGEN,5,1000,8000,8999,1,,-5
CSYS,0
!
/COM        ELEMENT GENERATION
/COM        LIFTING CAP
TYPE,1
E,22,1022,1021,21,2,1002,1001,1     ! TOP PLATE
EGEN,4,20,-1
E,132,1132,1131,131,82,1082,1081,81
E,23,1023,1022,22,3,1003,1002,2
EGEN,5,1,-1
E,43,1043,1042,42,23,1023,1022,22
EGEN,5,1,-1
E,63,1063,1062,62,43,1043,1042,42
EGEN,5,1,-1
E,83,1083,1082,82,63,1063,1062,62
EGEN,5,1,-1
E,133,1133,1132,132,83,1083,1082,82
EGEN,5,1,-1
E,30,1030,1027,27,10,1010,1007,7
EGEN,4,20,-1
E,87,90,110,110,1087,1090,1110,1110
E,87,110,137,137,1087,1110,1137,1137
E,110,140,137,137,1110,1140,1137,1137
E,31,1031,1030,30,11,1011,1010,10
EGEN,4,20,-1
E,32,1032,1031,31,12,1012,1011,11
EGEN,4,20,-1
E,33,1033,1032,32,13,1013,1012,12
EGEN,4,20,-1
E,34,1034,1033,33,14,1014,1013,13
EGEN,4,20,-1
```

E,35,1035,1034,34,15,1015,1014,14
EGEN,4,20,-1
E,36,1036,1035,35,16,1016,1015,15
EGEN,2,20,-1
E,702,1702,1036,36,700,1700,1016,16
E,704,1704,1056,56,702,1702,1036,36
E,703,1703,1702,702,701,1701,1700,700
EGEN,2,2,-1
E,37,1037,1703,703,17,1017,1701,701
E,57,1057,1705,705,37,1037,1703,703
E,75,96,95,95,1075,1096,1095,1095
E,111,1111,1110,110,91,1091,1090,90
E,112,1112,1111,111,92,1092,1091,91
E,113,1113,1112,112,93,1093,1092,92
EGEN,3,1,-1
E,116,1116,1115,115,96,1096,1095,95
E,117,1117,1116,116,97,1097,1096,96
EGEN,11,1,-1
E,141,1141,1140,140,111,1111,1110,110
EGEN,17,1,-1
E,144,145,128,128,1144,1145,1128,1128
E,129,1129,1128,128,146,1146,1145,145
E,130,1130,1129,129,147,1147,1146,146
E,158,1158,1130,130,148,1148,1147,147
E,159,1159,1158,158,149,1149,1148,148
EGEN,9,1,-1
E,158,159,169,169,1158,1159,1169,1169
E,170,1170,1169,169,160,1160,1159,159
EGEN,8,1,-1
E,170,171,181,181,1170,1171,1181,1181
E,182,1182,1181,181,172,1172,1171,171
EGEN,6,1,-1
E,192,1192,1188,188,182,1182,1181,181
E,193,1193,1192,192,183,1183,1182,182
EGEN,5,1,-1
E,188,192,202,202,1188,1192,1202,1202
E,203,1203,1202,202,193,1193,1192,192
EGEN,5,1,-1
E,202,203,208,208,1202,1203,1208,1208
E,209,1209,1208,208,204,1204,1203,203
EGEN,4,1,-1
E,214,1214,1213,213,209,1209,1208,208
E,215,1215,1214,214,210,1210,1209,209
EGEN,3,1,-1
E,213,214,219,219,1213,1214,1219,1219
E,220,1220,1219,219,215,1215,1214,214
EGEN,3,1,-1
E,225,1225,1224,224,220,1220,1219,219
EGEN,3,1,-1
E,235,1235,1234,234,225,1225,1224,224
EGEN,3,1,-1
E,234,235,245,245,1234,1235,1245,1245
E,246,1246,1245,245,236,1236,1235,235
E,247,1247,1246,246,237,1237,1236,236

```
E,256,1256,1255,255,246,1246,1245,245
E,257,1257,1256,256,247,1247,1246,246
E,266,1266,1265,265,256,1256,1255,255
E,267,1267,1266,266,257,1257,1256,256
E,291,1291,1285,285,266,1266,1265,265
E,297,1297,1291,291,267,1267,1266,266
E,311,1311,1305,305,291,1291,1285,285
EGEN,5,20,-1
E,317,1317,1311,311,297,1297,1291,291
EGEN,5,20,-1
E,410,1410,1405,405,391,1391,1385,385
E,391,416,410,410,1391,1416,1410,1410
E,417,1417,1416,416,397,1397,1391,391
E,436,1436,1430,430,416,1416,1410,410
E,437,1437,1436,436,417,1417,1416,416
E,446,1446,1445,445,430,1430,1435,435
E,430,436,446,446,1430,1436,1446,1446
E,447,1447,1446,446,437,1437,1436,436
E,456,1456,1455,455,446,1446,1445,445
EGEN,4,10,-1
E,496,1496,1495,495,486,1486,1485,485
E,457,1457,1456,456,447,1447,1446,446
EGEN,4,10,-1
E,497,1497,1496,496,487,1487,1486,486
E,506,1506,1505,505,496,1496,1495,495
EGEN,2,10,-1
E,526,1526,1525,525,516,1516,1515,515
E,525,526,530,530,1525,1526,1530,1530
E,507,1507,1506,506,497,1497,1496,496
EGEN,2,10,-1
E,527,1527,1526,526,517,1517,1516,516
E,526,527,530,530,1526,1527,1530,1530
E,525,530,535,535,1525,1530,1535,1535
E,504,1504,1503,503,494,1494,1493,493
EGEN,2,10,-1
E,505,1505,1504,504,495,1495,1494,494
EGEN,2,10,-1
E,524,1524,1523,523,514,1514,1513,513
EGEN,2,1,-1
E,534,1534,1533,533,524,1524,1523,523
EGEN,2,1,-1
E,544,1544,1543,543,534,1534,1533,533
EGEN,10,10,-1
E,545,1545,1544,544,535,1535,1534,534
EGEN,10,10,-1
SAVE
ESEL,ALL
EGEN,12,1000,ALL
!
/COM        MERGING COINCIDENT LABELS
NUMMRG,NODE                    ! MERGE ALL COINCIDENT NODES
!
/COM        BOUNDARY CONDITIONS
CSYS,11                        ! CYLINDRICAL
```

```
NROTAT,ALL                    ! ROTATE ALL NODES IN CURRENT SYS
NSEL,S,NODE,,1,705              ! SELECT ALL NODES ON FIRST SLICE!
DSYM,SYMM,Y,11                ! SYMMETRY CONSTRAINT
NSEL,ALL
NSEL,S,NODE,,12002,12705          ! SELECT NODES ON LAST SLICE
DSYM,SYMM,Y,11
NSEL,ALL
NSEL,S,NODE,,634,12634,1000       ! SELECT NODES AT BOTTOM OF C.COLLAR
D,ALL,UZ                      ! APPLY DOF CONSTRAINTS
!
SAVE
FINI
!
/COM        SOLUTION PHASE
/SOLU
NEQIT,25
OUTPR,,LAST
OUTRES,,LAST
!
/COM        LOAD STEP 1: LIFTING LOAD
NALL
NSEL,S,NODE,,5057,6057,1000
NSEL,A,NODE,,5705,6705,1000
SF,ALL,PRES,3010
NALL
NSEL,S,NODE,,6057,7057,1000
NSEL,A,NODE,,6705,7705,1000
SF,ALL,PRES,3010
NALL
NSEL,S,NODE,,5705,6705,1000
NSEL,A,NODE,,5704,6704,1000
SF,ALL,PRES,3077
NALL
NSEL,S,NODE,,6705,7705,1000
NSEL,A,NODE,,6704,7704,1000
SF,ALL,PRES,3077
NALL
NSEL,S,NODE,,5704,6704,1000
NSEL,A,NODE,,5056,6056,1000
SF,ALL,PRES,3148
NALL
NSEL,S,NODE,,6704,7704,1000
NSEL,A,NODE,,6056,7056,1000
SF,ALL,PRES,3148
NALL
EALL
LSWRITE,1
!
/COM        LOAD STEP 2: APPLYING 150 PSI INTERNAL PRESSURE
!
NALL
EALL
NSEL,S,LOC,X,11.45,11.55          ! LOWER HALF
NSEL,R,LOC,Z,8.1,-2.64
```

```
SF,ALL,PRES,150
NALL
EALL
NSEL,S,LOC,X,11.48,12.03
NSEL,R,LOC,Z,-2.61,-2.65
SF,ALL,PRES,150
NALL
EALL
NSEL,S,LOC,X,11.99,12.03
NSEL,R,LOC,Z,-2.61,-3.02
SF,ALL,PRES,150
NALL
EALL
NSEL,S,LOC,X,12,12.128          ! THREAD AREA
NSEL,R,LOC,Z,-2.64,-8.52
SF,ALL,PRES,150
NALL
EALL
NSEL,S,LOC,X,11.99,12.27
NSEL,R,LOC,Z,-4.98,-5.02
SF,ALL,PRES,150
NALL
EALL
NSEL,S,LOC,X,12.23,12.27
NSEL,R,LOC,Z,-4.95,-5.27
SF,ALL,PRES,150
NALL
EALL
NSEL,S,LOC,X,12.123,12.27
NSEL,R,LOC,Z,-5.23,-5.27
SF,ALL,PRES,150
NALL
EALL
NSEL,S,NODE,,265,12265,1000     ! START WELD AREA
NSEL,A,NODE,,255,12255,1000
NSEL,A,NODE,,245,12245,1000
NSEL,A,NODE,,234,12234,1000     ! END WELD AREA
NSEL,A,NODE,,224,12224,1000
NSEL,A,NODE,,219,12219,1000
NSEL,A,NODE,,213,12213,1000
NSEL,A,NODE,,208,12208,1000
NSEL,A,NODE,,202,12202,1000     ! STARTING INSIDE RADIUS
NSEL,A,NODE,,188,12188,1000
NSEL,A,NODE,,181,12181,1000
NSEL,A,NODE,,170,12170,1000
NSEL,A,NODE,,169,12169,1000
NSEL,A,NODE,,158,12158,1000
NSEL,A,NODE,,129,12129,1000
NSEL,A,NODE,,128,12128,1000     ! END RADIUS
NSEL,A,NODE,,144,12144,1000     ! INNER TOP PLATE
SF,ALL,PRES,150
NALL
EALL
NSEL,S,LOC,X,0,8.9
```

```
NSEL,R,LOC,Z,-12.943,-12.948
SF,ALL,PRES,150
NALL
EALL
LSWRITE,2
LSSOLVE,1,2
SAVE
FINI
! .
/COM        POSTPROCESSING
/POST1
SET,1
RSYS,11
PLNS,S,INT
PRRS,F
LPATH,6613,6615
PRSECT
!
SET,LAST                    ! READ LAST LOAD STEP
/TYPE,ALL,HIDC               ! DEFINE TYPE OF DISPLAY
/EDGE,ALL,1,60               ! DIPLAY ONLY THE 'EDGES'
/GLINE,ALL,0                ! DETERMINE ELEMENT OUTLINE STYLE
RSYS,11
PLNSOL,S,INT                 ! DISPLAY STRESS INTENSITY
PRRS,F                      ! PRINT REACTION FORCES
LPATH,6055,6015              ! LIFTING EAR (INSIDE)
PRSECT
LPATH,6056,6016              ! LIFTING EAR ( INSIDE EDGE OF SHOE)
PRSECT
LPATH,6704,6700              ! LIFTING EAR (INSIDE SHOE)
PRSECT
LPATH,6705,6701              ! LIFTING EAR (INSIDE SHOE)
PRSECT
LPATH,6057,6017              ! OUTSIDE EDGE OF LIFTING SHOE
PRSECT
LPATH,6128,6096              ! START RADIUS (TOP TO CYLINDRICAL)
PRSECT
LPATH,6170,6197              ! MID-RADIUS
PRSECT
LPATH,6188,6197              ! END RADIUS, START TRANSITION
PRSECT
LPATH,6245,6247              ! END TRANSITION, WELD AREA
PRSECT
LPATH,6255,6257              ! THRU WELD
PRSECT
LPATH,6285,6297              ! BELOW WELD
PRSECT
LPATH,6485,6487              ! BOTTOM OF LOCKING RING POSITION
PRSECT
LPATH,6543,6545              ! LR TRANSITION TO SHELL
PRSECT
LPATH,6613,6615              ! SHELL
PRSECT
SAVE
```

COMPUTER RUN COVER SHEET

Project Number:	KH-8009-8
Computer Code:	ANSYS®-PC
Software Version:	5.0A
Computer System:	MS-DOS, Pentium® Processor
Computer Run File Number:	KH-8009-8-04
Unique Computer Run Filename:	NEWCAP.out
Run Description:	Stress Analysis of Lifting Cap
Run Date / Time:	28 March 1997 12:36:42 PM

Prepared By: Zachary G. Sargent — Date: 4/18/97

Checked By: Joe Nichols — Date: 4/17/97

COMPUTER RUN COVER SHEET

Project Number:	KH-8009-8
Computer Code:	ANSYS®-PC
Software Version:	5.0A
Computer System:	MS-DOS, Pentium® Processor
Computer Run File Number:	KH-8009-8-04
Unique Computer Run Filename:	MODCAP.inp
Run Description:	Stress Analysis of the Modified Lifting Cap
Creation Date / Time:	28 March 1997 11:33:14 AM

Prepared By: Zachary G. Sargent Date 4/18/97

Checked By: Joe Nichols Date 4/17/97

LISTING OF MODCAP.INP FILE

```
/BATCH,LIST
/FILNAM,MODCAP
/PREP7
/TITLE,MCO MODIFIED CAP & COLLAR, 132 C, 150 PSIG

/COM        DEFINING TEMPERATURES
TREF,70                    ! REFERENCE TEMPERATURE
TUNIF,270                  ! UNIFORM NODAL TEMPERATURE

/COM        DEFINING ELEMENT TYPES
ET,1,SOLID45

/COM        DEFINING MATERIAL PROPERTIES
MP,EX,1,30e6               ! YOUNG'S MODULUS
MP,ALPX,1,1                ! COEFFICIENT OF THERMAL EXP.
MP,NUXY,1,0.3              ! POISSON'S RATIO
MP,DENS,1,490/1728         ! WEIGHT DENDITY (490 lb/ft^3),
                           ! ASSUMED CONSTANT W/ TEMP.
MPTEMP,1,70,100,200,300,400,500    ! TEMPERATURES FOR PROPERTIES
MPTEMP,7,600,650,700,750

/COM        ELASTIC MODULI FOR 304L STAINLESS STEEL
MPDATA,EX,1,1,28.3E+06,28.1E+06,27.6E+06,27.0E+06,26.5E+06,25.8E+06
MPDATA,EX,1,7,25.3E+06,25.1E+06,24.8E+06,24.5E+06

/COM **** MEAN COEFFICIENTS OF THERMAL EXPANSION (in./in./(F) ****
MPDATA,ALPX,1,1,0,8.55e-06,8.79e-06,9.00e-06,9.19e-06,9.37e-06
MPDATA,ALPX,1,7,9.53e-06,9.61e-06,9.69e-06,9.76e-06


/COM        DEFINING LOCAL COORDINATE SYSTEMS
LOCAL,11,1,,,,,90
CSYS,0

/COM        DEFINING NODES---LIFTING CAP
/COM        TOP OF LIFTING CAP
N,2,1.25,16.442
N,3,2,16.442
N,7,6,16.442
FILL,3,7
N,10,7,16.442
N,12,7.94,16.442
FILL,10,12
N,15,9.375,16.442
FILL,12,15
N,16,9.53,16.442
N,17,10.19,16.442
N,21,1,16.192
N,22,1.25,16.192
N,23,2,15.942
```

N,27,6,15.942
FILL,23,27
N,30,7,15.942
N,32,7.94,15.942
FILL,30,32
N,35,9.375,15.942
FILL,32,35
N,36,9.53,15.942
N,37,10.19,15.942
N,40,0.517,15.297
N,41,1,15.297
N,42,1.25,15.297
N,43,2,15.442
N,47,6,15.442
FILL,43,47
N,50,7,15.442
N,52,7.94,15.442
FILL,50,52
N,55,9.375,15.442
FILL,52,55
N,56,9.53,15.442
N,57,10.19,15.442
N,60,0.517,14.7445
N,61,1,14.7445
N,62,1.25,14.7445
N,63,2,14.882
N,67,6,14.882
FILL,63,67
N,70,7,14.882
N,72,7.94,14.882
FILL,70,72
N,75,9.375,14.882
FILL,72,75
N,77,0.125,13.993
N,80,0.517,14.192
N,81,1,14.192
N,82,1.25,14.192
N,83,2,14.316
N,87,6,14.316
FILL,83,87
N,90,7,14.316
N,92,7.94,14.316
FILL,90,92
N,95,9.375,14.316
FILL,92,95
N,96,9.625,14.316
N,102,11.125,14.316
FILL,96,102
N,103,11.4035,14.316
N,104,11.75,14.316
N,105,12.125,14.316
N,106,12.375,14.316
N,107,12.625,14.316
N,18,0.125,12.946

```
N,19,0.517,12.946
N,20,1,12.946
N,132,1.25,12.946
N,133,2,12.946
N,137,6,12.946
FILL,133,137
N,140,7,12.946
N,142,7.94,12.946
FILL,140,142
N,145,9.375,12.946
FILL,142,145
N,146,9.625,12.946
N,152,11.125,12.946
FILL,146,152
N,153,11.4035,12.946
N,154,11.75,12.946
N,155,12.125,12.946
N,156,12.375,12.946
N,157,12.625,12.946
SAVE
FILL,90,140,1,110
FILL,91,141,1,111
FILL,92,142,1,112
FILL,93,143,1,113
FILL,94,144,1,114
FILL,95,145,1,115
FILL,96,146,1,116
FILL,97,147,1,117
FILL,98,148,1,118
FILL,99,149,1,119
FILL,100,150,1,120
FILL,101,151,1,121
FILL,102,152,1,122
FILL,103,153,1,123
FILL,104,154,1,124
FILL,105,155,1,125
FILL,106,156,1,126
FILL,107,157,1,127
N,700,9.75,16.442              ! LIFTING EAR
N,701,9.97,16.442
N,704,9.75,15.442
N,705,9.97,15.442
FILL,700,704,1,702
FILL,701,705,1,703

/COM        SIDE OF LIFTING CAP

N,128,9.375,12.8519
N,129,9.625,12.7692
N,130,9.875,12.6589
N,158,10.125,12.5171
N,159,10.375,12.571
N,160,10.625,12.571
N,161,10.875,12.571
```

N,162,11.125,12.571
N,163,11.4035,12.571
N,164,11.75,12.571
N,165,12.125,12.571
N,166,12.375,12.571
N,167,12.625,12.571
N,169,10.375,12.3375
N,170,10.5687,12.1661
N,171,10.875,12.196
N,172,11.125,12.196
N,173,11.4035,12.196
N,174,11.75,12.196
N,175,12.125,12.196
N,176,12.375,12.196
N,177,12.625,12.196
N,181,10.7726,11.946
N,182,11.125,11.946
N,183,11.4035,11.946
N,184,11.75,11.946
N,185,12.125,11.946
N,186,12.375,11.946
N,187,12.625,11.946
N,188,11.0198,11.596
N,192,11.125,11.596
N,193,11.4035,11.596
N,194,11.75,11.596
N,195,12.125,11.596
N,196,12.375,11.596
N,197,12.625,11.596
N,202,11.1753,11.296
N,203,11.4035,11.296
N,204,11.75,11.296
N,205,12.125,11.296
N,206,12.375,11.296
N,207,12.625,11.296
N,208,11.3421,10.869
N,209,11.75,10.869
N,210,12.125,10.869
N,211,12.375,10.869
N,212,12.625,10.869
N,213,11.5046,10.4420
N,214,11.75,10.4420
N,215,12.125,10.4420
N,216,12.375,10.4420
N,217,12.625,10.4420
N,219,11.6672,10.0146
N,220,12.125,10.0146
N,221,12.375,10.0146
N,222,12.625,10.0146
N,224,11.8682,9.4866
N,225,12.125,9.4866
N,226,12.375,9.4866
N,227,12.625,9.4866
N,234,12.0691,8.9586

```
/COM        WELD AREA BETWEEN LIFTING CAP & CANISTER COLLAR
N,235,12.125,8.94
N,236,12.375,8.94
N,237,12.625,8.94
N,245,12.225,8.793
N,246,12.375,8.793
N,247,12.625,8.793
N,255,12.225,8.646
N,256,12.375,8.646
N,257,12.625,8.646

/COM        CANISTER COLLAR THREADS
N,265,12.225,8.5                ! UPPER OUTER THREADS
N,266,12.375,8.5
N,267,12.625,8.5
N,285,12.125,8.25
N,297,12.625,8.25
FILL,285,297,1,291
N,305,12.125,7.75
N,317,12.625,7.75
FILL,305,317,1,311
N,405,12.125,5.25
FILL,305,405,4,325              ! LOWER OUTER THREADS
N,410,12.25,5.25                ! LOWER LIFTING CAP
N,391,12.375,5.75
FILL,311,391,3,331
N,416,12.5,5.25
N,417,12.625,5.25
FILL,317,417,4,337
N,430,12.25,5
N,435,12.01,5
N,437,12.625,5
N,445,12.01,4.6
N,447,12.625,4.6
FILL,445,447
FILL,430,437,1,436
N,485,12.01,3
FILL,445,485,3,455
N,487,12.625,3
FILL,437,487,4,447
FILL,485,487,1,486
FILL,446,486,3,456
N,493,11.5,2.63
N,495,12.01,2.63
FILL,493,495
N,497,12.625,2.63
FILL,495,497
N,503,11.5,2.33
N,505,12.01,2.33
FILL,503,505
N,507,12.625,2.33
FILL,505,507
N,513,11.5,2.03
```

```
N,515,12.01,2.03
FILL,513,515
N,517,12.625,2.03
FILL,515,517
N,523,11.5,1.63
N,525,12.01,1.63
FILL,523,525
N,527,12.625,1.63
FILL,525,527
N,530,12.318,1.315
N,533,11.5,1
N,535,12.01,1
FILL,533,535
N,553,11.5,0
N,555,12.01,0
FILL,533,553,1,543
FILL,553,555
FILL,534,554,1,544
FILL,535,555,1,545
N,633,11.5,-8
FILL,553,633,7,563
N,635,12.01,-8
FILL,555,635,7,565
FILL,563,565
FILL,573,575
FILL,583,585
FILL,593,595
FILL,603,605
FILL,613,615
FILL,623,625
FILL,633,635                    ! BOTTOM
SAVE

/COM        CHANGING TO LOCAL COORDINATE SYSTEM
CSYS,11
/COM        NODAL GENERATION 60 DEGREE SWEEP
NGEN,5,1000,ALL,,,,-5               ! 5 DEGREE INCREMENTS
NGEN,2,1000,4000,4999,1,,-4.27
NGEN,3,1000,5000,5999,1,,-5.73          ! GRAPPLE SHOE AREA (1.97"X0.66")
NGEN,2,1000,7000,7999,1,,-4.27
NGEN,5,1000,8000,8999,1,,-5
CSYS,0

/COM        ELEMENT GENERATION
/COM        LIFTING CAP
TYPE,1
E,42,1042,1041,41,22,1022,1021,21
EGEN,3,20,-1
E,61,1061,1060,60,41,1041,1040,40
EGEN,2,20,-1
E,19,1019,1018,18,80,1080,1077,77
E,20,1020,1019,19,81,1081,1080,80
E,132,1132,1020,20,82,1082,1081,81
E,23,1023,1022,22,3,1003,1002,2
```

```
EGEN,5,1,-1
E,43,1043,1042,42,23,1023,1022,22
EGEN,5,1,-1
E,63,1063,1062,62,43,1043,1042,42
EGEN,5,1,-1
E,83,1083,1082,82,63,1063,1062,62
EGEN,5,1,-1
E,133,1133,1132,132,83,1083,1082,82
EGEN,5,1,-1
E,30,1030,1027,27,10,1010,1007,7
EGEN,4,20,-1
E,87,90,110,110,1087,1090,1110,1110
E,87,110,137,137,1087,1110,1137,1137
E,110,140,137,137,1110,1140,1137,1137
E,31,1031,1030,30,11,1011,1010,10
EGEN,4,20,-1
E,32,1032,1031,31,12,1012,1011,11
EGEN,4,20,-1
E,33,1033,1032,32,13,1013,1012,12
EGEN,4,20,-1
E,34,1034,1033,33,14,1014,1013,13
EGEN,4,20,-1
E,35,1035,1034,34,15,1015,1014,14
EGEN,4,20,-1
E,36,1036,1035,35,16,1016,1015,15
EGEN,2,20,-1
E,702,1702,1036,36,700,1700,1016,16
E,704,1704,1056,56,702,1702,1036,36
E,703,1703,1702,702,701,1701,1700,700
EGEN,2,2,-1
E,37,1037,1703,703,17,1017,1701,701
E,57,1057,1705,705,37,1037,1703,703
E,75,96,95,95,1075,1096,1095,1095
E,111,1111,1110,110,91,1091,1090,90
E,112,1112,1111,111,92,1092,1091,91
E,113,1113,1112,112,93,1093,1092,92
EGEN,3,1,-1
E,116,1116,1115,115,96,1096,1095,95
E,117,1117,1116,116,97,1097,1096,96
EGEN,11,1,-1
E,141,1141,1140,140,111,1111,1110,110
EGEN,17,1,-1
E,144,145,128,128,1144,1145,1128,1128
E,129,1129,1128,128,146,1146,1145,145
E,130,1130,1129,129,147,1147,1146,146
E,158,1158,1130,130,148,1148,1147,147
E,159,1159,1158,158,149,1149,1148,148
EGEN,9,1,-1
E,158,159,169,169,1158,1159,1169,1169
E,170,1170,1169,169,160,1160,1159,159
EGEN,8,1,-1
E,170,171,181,181,1170,1171,1181,1181
E,182,1182,1181,181,172,1172,1171,171
EGEN,6,1,-1
```

```
E,192,1192,1188,188,182,1182,1181,181
E,193,1193,1192,192,183,1183,1182,182
EGEN,5,1,-1
E,188,192,202,202,1188,1192,1202,1202
E,203,1203,1202,202,193,1193,1192,192
EGEN,5,1,-1
E,202,203,208,208,1202,1203,1208,1208
E,209,1209,1208,208,204,1204,1203,203
EGEN,4,1,-1
E,214,1214,1213,213,209,1209,1208,208
E,215,1215,1214,214,210,1210,1209,209
EGEN,3,1,-1
E,213,214,219,219,1213,1214,1219,1219
E,220,1220,1219,219,215,1215,1214,214
EGEN,3,1,-1
E,225,1225,1224,224,220,1220,1219,219
EGEN,3,1,-1
E,235,1235,1234,234,225,1225,1224,224
EGEN,3,1,-1
E,234,235,245,245,1234,1235,1245,1245
E,246,1246,1245,245,236,1236,1235,235
E,247,1247,1246,246,237,1237,1236,236
E,256,1256,1255,255,246,1246,1245,245
E,257,1257,1256,256,247,1247,1246,246
E,266,1266,1265,265,256,1256,1255,255
E,267,1267,1266,266,257,1257,1256,256
E,291,1291,1285,285,266,1266,1265,265
E,297,1297,1291,291,267,1267,1266,266
E,311,1311,1305,305,291,1291,1285,285
EGEN,5,20,-1
E,317,1317,1311,311,297,1297,1291,291
EGEN,5,20,-1
E,410,1410,1405,405,391,1391,1385,385
E,391,416,410,410,1391,1416,1410,1410
E,417,1417,1416,416,397,1397,1391,391
E,436,1436,1430,430,416,1416,1410,410
E,437,1437,1436,436,417,1417,1416,416
E,446,1446,1445,445,430,1430,1435,435
E,430,436,446,446,1430,1436,1446,1446
E,447,1447,1446,446,437,1437,1436,436
E,456,1456,1455,455,446,1446,1445,445
EGEN,4,10,-1
E,496,1496,1495,495,486,1486,1485,485
E,457,1457,1456,456,447,1447,1446,446
EGEN,4,10,-1
E,497,1497,1496,496,487,1487,1486,486
E,506,1506,1505,505,496,1496,1495,495
EGEN,2,10,-1
E,526,1526,1525,525,516,1516,1515,515
E,525,526,530,530,1525,1526,1530,1530
E,507,1507,1506,506,497,1497,1496,496
EGEN,2,10,-1
E,527,1527,1526,526,517,1517,1516,516
E,526,527,530,530,1526,1527,1530,1530
```

```
E,525,530,535,535,1525,1530,1535,1535
E,504,1504,1503,503,494,1494,1493,493
EGEN,2,10,-1
E,505,1505,1504,504,495,1495,1494,494
EGEN,2,10,-1
E,524,1524,1523,523,514,1514,1513,513
EGEN,2,1,-1
E,534,1534,1533,533,524,1524,1523,523
EGEN,2,1,-1
E,544,1544,1543,543,534,1534,1533,533
EGEN,10,10,-1
E,545,1545,1544,544,535,1535,1534,534
EGEN,10,10,-1
SAVE
ESEL,ALL
EGEN,12,1000,ALL

/COM        MERGING COINCIDENT LABELS
NUMMRG,NODE                    ! MERGE ALL COINCIDENT NODES

/COM        BOUNDARY CONDITIONS
CSYS,11                    ! CYLINDRICAL
NROTAT,ALL                   ! ROTATE ALL NODES IN CURRENT SYS
NSEL,S,NODE,,1,705             ! SELECT ALL NODES ON FIRST SLICE!
DSYM,SYMM,Y,11                 ! SYMMETRY CONSTRAINT
NSEL,ALL
NSEL,S,NODE,,12002,12705          ! SELECT NODES ON LAST SLICE
DSYM,SYMM,Y,11
NSEL,ALL
NSEL,S,NODE,,634,12634,1000       ! SELECT NODES AT BOTTOM OF C.COLLAR
D,ALL,UZ                   ! APPLY DOF CONSTRAINTS
SAVE
FINI

/COM        SOLUTION PHASE
/SOLU
NEQIT,25
OUTPR,,LAST
OUTRES,,LAST

/COM        LOAD STEP 1: LIFTING LOAD
NALL
NSEL,S,NODE,,5057,6057,1000
NSEL,A,NODE,,5705,6705,1000
SF,ALL,PRES,3010
NALL
NSEL,S,NODE,,6057,7057,1000
NSEL,A,NODE,,6705,7705,1000
SF,ALL,PRES,3010
NALL
NSEL,S,NODE,,5705,6705,1000
NSEL,A,NODE,,5704,6704,1000
SF,ALL,PRES,3077
NALL
```

```
NSEL,S,NODE,,6705,7705,1000
NSEL,A,NODE,,6704,7704,1000
SF,ALL,PRES,3077
NALL
NSEL,S,NODE,,5704,6704,1000
NSEL,A,NODE,,5056,6056,1000
SF,ALL,PRES,3148
NALL
NSEL,S,NODE,,6704,7704,1000
NSEL,A,NODE,,6056,7056,1000
SF,ALL,PRES,3148
NALL
EALL
LSWRITE,1

/COM        LOAD STEP 2: APPLYING 150 PSI INTERNAL PRESSURE
NALL
EALL
NSEL,S,LOC,X,11.45,11.55            ! LOWER HALF
NSEL,R,LOC,Z,8.1,-2.64
SF,ALL,PRES,150
NALL
EALL
NSEL,S,LOC,X,11.48,12.03
NSEL,R,LOC,Z,-2.61,-2.65
SF,ALL,PRES,150
NALL
EALL
NSEL,S,LOC,X,11.99,12.03
NSEL,R,LOC,Z,-2.61,-3.02
SF,ALL,PRES,150
NALL
EALL
NSEL,S,LOC,X,12,12.128              ! THREAD AREA
NSEL,R,LOC,Z,-2.64,-8.52
SF,ALL,PRES,150
NALL
EALL
NSEL,S,LOC,X,11.99,12.27
NSEL,R,LOC,Z,-4.98,-5.02
SF,ALL,PRES,150
NALL
EALL
NSEL,S,LOC,X,12.23,12.27
NSEL,R,LOC,Z,-4.95,-5.27
SF,ALL,PRES,150
NALL
EALL
NSEL,S,LOC,X,12.123,12.27
NSEL,R,LOC,Z,-5.23,-5.27
SF,ALL,PRES,150
NALL
EALL
NSEL,S,NODE,,285,12285,1000
```

```
NSEL,A,NODE,,265,12265,1000          ! START WELD AREA
NSEL,A,NODE,,255,12255,1000
NSEL,A,NODE,,245,12245,1000
NSEL,A,NODE,,234,12234,1000          ! END WELD AREA
NSEL,A,NODE,,224,12224,1000
NSEL,A,NODE,,219,12219,1000
NSEL,A,NODE,,213,12213,1000
NSEL,A,NODE,,208,12208,1000
NSEL,A,NODE,,202,12202,1000          ! STARTING INSIDE RADIUS
NSEL,A,NODE,,188,12188,1000
NSEL,A,NODE,,181,12181,1000
NSEL,A,NODE,,170,12170,1000
NSEL,A,NODE,,169,12169,1000
NSEL,A,NODE,,158,12158,1000
NSEL,A,NODE,,129,12129,1000
NSEL,A,NODE,,128,12128,1000          ! END RADIUS
NSEL,A,NODE,,144,12144,1000          ! INNER TOP PLATE
SF,ALL,PRES,150
NALL
EALL
NSEL,S,LOC,X,0,8.9
NSEL,R,LOC,Z,-12.943,-12.948
SF,ALL,PRES,150
NALL
EALL
LSWRITE,2
LSSOLVE,1,2
SAVE
FINI

/COM      POSTPROCESSING
/POST1
SET,1
RSYS,11
PLNS,S,INT
PRRS,F
LPATH,6613,6615
PRSECT
SET,LAST                    ! READ LAST LOAD STEP
/TYPE,ALL,HIDC               ! DEFINE TYPE OF DISPLAY
/EDGE,ALL,1,60               ! DIPLAY ONLY THE 'EDGES'
/GLINE,ALL,0                 ! DETERMINE ELEMENT OUTLINE STYLE
RSYS,11
PLNSOL,S,INT                 ! DISPLAY STRESS INTENSITY
PRRS,F                      ! PRINT REACTION FORCES
LPATH,6004,6134              ! TOP PLATE
PRSECT
LPATH,6002,6132              ! TOP PLATE
PRSECT
LPATH,6004,6018              ! TOP PLATE
PRSECT
LPATH,6055,6015              ! LIFTING EAR (INSIDE)
PRSECT
LPATH,6056,6016              ! LIFTING EAR ( INSIDE EDGE OF SHOE)
```

```
PRSECT
LPATH,6704,6700          ! LIFTING EAR (INSIDE SHOE)
PRSECT
LPATH,6705,6701          ! LIFTING EAR (INSIDE SHOE)
PRSECT
LPATH,6057,6017          ! OUTSIDE EDGE OF LIFTING SHOE
PRSECT
LPATH,6128,6096          ! START RADIUS (TOP TO CYLINDRICAL)
PRSECT
LPATH,6170,6197          ! MID-RADIUS
PRSECT
LPATH,6188,6197          ! END RADIUS, START TRANSITION
PRSECT
LPATH,6245,6247          ! END TRANSITION, WELD AREA
PRSECT
LPATH,6255,6257          ! THRU WELD
PRSECT
LPATH,6285,6297          ! BELOW WELD
PRSECT
LPATH,6485,6487          ! BOTTOM OF LOCKING RING POSITION
PRSECT
LPATH,6543,6545          ! LR TRANSITION TO SHELL
PRSECT
LPATH,6613,6615          ! SHELL
PRSECT
SAVE
```

COMPUTER RUN COVER SHEET

Project Number:	KH-8009-8
Computer Code:	ANSYS®-PC
Software Version:	5.0A
Computer System:	MS-DOS, Pentium® Processor
Computer Run File Number:	KH-8009-8-04
Unique Computer Run Filename:	MODCAP.out
Run Description:	Stress Analysis of the Modified Lifting Cap
Run Date / Time:	28 March 1997 11:47:42 AM

Prepared By: Zachary G. Sargent — Date: 4/18/97

Checked By: Joe Nichols — Date: 4/17/97

INPUT FILE COVER SHEET

Project Number:	KH-8009-8
Computer Code:	ANSYS®
Software Version:	n/a (See Note)
Computer System:	n/a (See Note)
Computer Run File Number:	KH-8009-8-04
Unique Input Filename:	THRD3.inp
Input File Description:	Stress Analysis of the MCO Thread/Closure
Creation Date / Time:	16 April 1997 10:28 AM

Bob V. Winkel 4/18/97

Prepared By: Bob V. Winkel Date

See Note N/A

Checked By: Ward Ingles Date

Note: This input file will run under multiple versions of ANSYS on different platforms. The input file was not checked, the output generated by the input file was checked.

LISTING OF THRD3.INP FILE

```
/batch,list
/title,MCO Closure Threads, Preload Only, No Friction
/filname,thrd3
/prep7

/triad,ltop

*afun,deg
/com element types for shell collar (internal threads)
et,2,plane42,,,1    ! axisymmetric quads

/com element types for jacking bolts
et,3,plane42,,,1    ! axisymmetric quads

/com element types for lifting & locking ring (external threads)
et,4,plane42,,,1    ! axisymmetric quads

/com element types for shield plug
et,6,plane42,,,1    ! axisymmetric quads

et,7,contac48      ! contact surface (gap) elements at threads
keyopt,7,7,1
r,7,1.0E+06

et,8,contac12              ! contact elements under jacking bolts
keyopt,8,7,1
r,8,0,1.0E+05,.304,1.0    ! initial interference for preload

/com define variables
hs=.1657        ! thread height
he=.1406        ! height of thread engagment
F=.0408         ! crest width
Dpitch=24.5
Rpitch=Dpitch/2
pitch=.25       ! pitch

/com shell dimensions
RSin =24.04/2           ! collar inside radius (below threads)
RSout=25.31/2           ! collar outside radius

IRshell1=11.50          ! shell inside radius (lower section)
ORshell1=12.00          ! shell outside radius (lower section)

REmin=Rpitch-hs         ! external thread (locking & lifting ring)
REmax=Rpitch

RImin=Rpitch-he         ! internal thread (shell collar)
RImax=Rpitch-he+hs

RSavg=(RImax+RSout)/2   ! average radius at threads

Rrelief=24.567/2

BoltCirc=21.75      ! bolt circle diameter
```

```
BoltSize=1.500     ! bolt nominal diameter

BoltIR=(BoltCirc-BoltSize)/2      ! diameter at intside edge jacking bolts
BoltOR=(BoltCirc+BoltSize)/2      ! diameter at outside edge jacking bolts
BoltA=3.1415926*((BoltOR*BoltOR)-(BoltIR*BoltIR))

/com scale factor for bolt E & Sy (modeled as axisymmetric)
RealArea=18*1.41    ! tensile area of jacking bolts
SF=RealArea/BoltA   ! SF = actual bolt area/modeled bolt area

elsize=.7*0.05         ! element size for thread mesh

/com thread dimensions
Y2=0
Y3=(hs-he)*tan(7)
Y4=(hs*tan(7))
Y5=(hs*tan(7))+F
Y6=pitch-Y5

/com material properties ********************************************************
/com 304L
mp,nuxy,1,.3        ! poisson constant with temperature
mp,dens,1,493/1728  ! weight density (493 lb/ft^3), assumed constant w/temp.

/com nonlinear properties - 304L
etan=.006           ! use 5% tangent modulus
tb,bkin,1,6         ! yield stress and tangent moduli v. temperature
tbtemp,100
tbdata,1,25000,etan*28.1E+06
tbtemp,300
tbdata,1,19100,etan*27.0E+06
tbtemp,400
tbdata,1,17500,etan*26.5E+06
tbtemp,500
tbdata,1,16300,etan*25.8E+06
tbtemp,700
tbdata,1,14900,etan*24.8E+06
tbtemp,750
tbdata,1,14700,etan*24.5E+06

mptemp,1, 70,100,200,300,400,500
mptemp,7,600,650,700,750

/com elastic moduli for 304L stainless steel
mpdata,ex,1,1,28.3E+06,28.1E+06,27.6E+06,27.0E+06,26.5E+06,25.8E+06
mpdata,ex,1,7,25.3E+06,25.1E+06,24.8E+06,24.5E+06

/com instantaneous coefficients of thermal expansion, 304L stainlesss
mpdata,alpx,1,1,8.46E-06,8.63E-06,9.08E-06,9.46E-06,9.80E-06,10.10E-06
mpdata,alpx,1,7,10.38E-06,10.50E-06,10.60E-06,10.70E-06

/com bolting material SA-193 B8M (16Cr-12Ni-2Mo, 316)*************************
mp,nuxy,2,.3        ! poisson constant with temperature
mp,dens,2,493/1728  ! weight density (493 lb/ft^3), assumed constant w/temp.

/com nonlinear properties - bolting material SA-193 B8M (16Cr-12Ni-2Mo, 316)
```

```
tb,bkin,2,6          ! yield stress and tangent moduli v. temperature
tbtemp,100
tbdata,1,SF*30000,etan*28.1E+06
tbtemp,300
tbdata,1,SF*23300,etan*27.0E+06
tbtemp,400
tbdata,1,SF*21400,etan*26.5E+06
tbtemp,500
tbdata,1,SF*19900,etan*25.8E+06
tbtemp,700
tbdata,1,SF*18100,etan*24.8E+06
tbtemp,750
tbdata,1,SF*17800,etan*24.5E+06



mptemp,1, 70,100,200,300,400,500
mptemp,7,600,650,700,750

/com elastic moduli for 16Cr-12Ni (same as 304, 18-8)
mpdata,ex,2,1,SF*28.3E+06,SF*28.1E+06,SF*27.6E+06,SF*27.0E+06,SF*26.5E+06,
mpdata,ex,2,6,SF*25.8E+06,SF*25.3E+06,SF*25.1E+06,SF*24.8E+06,SF*24.5E+06

/com instantaneous coefficients of thermal expansion, 16Cr-12Ni-2Mo High Alloy
mpdata,alpx,2,1,8.42E-06,8.59E-06,9.09E-06,9.56E-06,9.95E-06,10.25E-06
mpdata,alpx,2,7,10.51E-06,10.64E-06,10.76E-06,10.87E-06

/com list material properties
mplist
tblist

/com Shell Collar (internal thread) ************************************
k,10,IRshell1,-12.00
k,11,ORshell1,-12.00
k,12,IRshell1,-4.00
k,13,ORshell1,-4.00     ! bottom of transistion - outer shell

k,14,RSout,-3.37
k,15,IRshell1,-2.97     ! top of transistion - outer shell
k,16,RSout,-2.97

k,17,IRshell1,-2.70
k,18,RSout,-2.70

k,19,IRshell1,-2.37     ! sealing surface
k,20,23.375/2,-2.37     ! sealing surface
k,21,     RSin,-2.37    ! sealing surface
k,22,    RSout,-2.37    ! sealing surface

k,31, RSin,-2.12
k,32,RSout,-2.12

k,33, RSin,-1.87
k,34,RSout,-1.87

k,35, RSin,-.5
```

```
k,36,RSout,-.5

k,37, RSin,-.25
k,38,RSout,-.25

k,39, RSin,0                ! bottom of thread relief
k,40,Rrelief-.125,0         ! bottom of thread relief - tangent point
k,41,RSavg,.125             ! centerpoint of thread relief at vert. tangent
k,42,RSout,.125             ! outside of thread relief at vertical tangent

k,43,Rrelief,.125         ! thread relief vertical tangent point
k,44,Rrelief-.125,.125    ! thread relief center of curvature

/com area ? - first thread
k,105,RSout,0.25
k,106,RSavg,0.25
k,107,RImax,0.25
k,108,RImin+he,.25+Y3
k,109,RImin,    .25+Y4
k,110,RImin,    .25+Y5
k,111,RImax,    .25+Y6
k,112,RImax,    .25+Pitch
k,113,RSavg,    .25+Pitch
k,114,RSout,    .25+Pitch

/com lines for collar at thread relief
l,37,38
l,38,42
l,42,41
l,41,43
larc,43,40,44,.125
l,40,39
l,39,37

a,10,11,13,12         ! nominal shell
a,12,13,14,16,15      ! collar transition
a,15,16,18,17         !
a,17,18,22,21,20,19   ! area at sealing surface
a,21,22,32,31         ! collar above sealing surface
a,31,32,34,33         ! collar - medium elements
a,33,34,36,35         ! collar - coarse element
a,35,36,38,37         ! collar - medium elements

al,1,2,3,4,5,6,7
!a,37,38,42,41,40,39  ! collar below thread relief

/com generate thread areas
a,43,41,106,107                    ! thread relief - inside
a,41,42,105,106                    ! thread relief - outside
a,107,106,113,112,111,110,109,108  ! thread tooth
a,106,105,114,113                  ! thread outside

/com Lifting & Locking Ring (external thread) ******************************
local,11,0,,.08
k,1000,15.9/2    ! 7.95"
k,1001,BoltIR
```

```
k,1002,BoltOR
k,1003,12.0

k,1004,REmin
k,1005,REmax,Y6-Y5
k,1006,REmax,Y6-Y4
k,1007,REmax-he,Y6-Y3
k,1008,REmin,Y6-Y2
k,1009,REmin,pitch

k,1010,12.0,pitch
k,1011,BoltOR,pitch
k,1012,BoltIR,pitch
k,1013,15.9/2,pitch

/com area 5
a,1003,1004,1005,1006,1007,1008,1009,1010    ! thread profile
/com area ?
a,1002,1003,1010,1011                        ! outer (fine) transition
/com area ?
a,1001,1002,1011,1012                        ! inner (coarse) transition
/com area ?
a,1000,1001,1012,1013                        ! ring

/com shield plug dimensions ************************************************
rplug1=15.78/2
rplug2=22.90/2
rplug3=23.95/2
rseal1=23.4/2     ! o-ring groove
rseal2=23.375/2   ! o-ring groove

/com shield plug      *************************
local,12,0,,-2.37

/com shield plug outline
k,2000,rplug1,-2.25
k,2001,rplug2-.181,-2.25
k,2002,rplug2,-1
k,2003,rplug2,.155
k,2004,rplug3-.300,.155
k,2005,rplug3-.300,.001
k,2006,rplug3,.001
k,2007,rplug3,.155
k,2008,rplug3,2.31
k,2009,rplug1,2.31

/com other locations on shield plug
k,2100,BoltIR,2.31
k,2101,BoltOR,2.31
k,2102,BoltIR,1.75
k,2103,BoltOR,1.75
k,2104,rplug3,1.75
k,2105,BoltIR,.35
k,2106,11.9,.35
k,2107,plugr3,.35
k,2107,rplug3,.35
```

```
k,2108,rplug2,.35

a,2102,2103,2101,2100                    ! under bolt
a,2103,2104,2008,2101                    ! outside radius at top
a,2105,2108,2106,2107,2104,2103,2102     ! center of plug
a,2005,2006,2007,2004
a,2003,2004,2007,2107,2106,2108
a,2000,2001,2002,2003,2108,2105,2102,2100,2009

/com mesh areas *** (fine to coarse) *********************************
esize,elsize   ! ****************************
type,2       ! collar
amesh,10
amesh,12
type,4       ! collar
amesh,14
type,6       ! plug quads
amesh,21
type,2       ! collar quads
amesh, 4

esize,1.5*elsize ! ************************
type,2       ! collar quads
amesh,11
amesh,13
amesh, 9
amesh, 5

esize,2*elsize ! ******************************
type,4      ! ring quads
amesh,15
type,6      ! plug quads
amesh,22

esize,4*elsize ! ************************
type,2       ! collar quads
amesh, 3
amesh, 6
amesh, 8
type,6       ! plug quads
amesh,20

esize,8*elsize
type,4       ! ring quads
amesh,16
type, 6      ! plug quads
amesh,18
amesh,19
type,2       ! collar quads
amesh, 7

esize,10*elsize
type,4        ! ring quads
amesh,17
type,2       ! collar quads
amesh, 2
```

```
esize,15*elsize
type,2      ! collar quads
amesh, 1
type,6       ! plug quads
amesh,23

/com ******************************************************************
agen,11,12,17,1,,.25   !  generate 11 threads
alls

/com group nodes for gap surfaces
lsel,s,line,,45     ! shell - 1st thread
nsll,,1             ! select nodes on line
cm,t1shell,node     ! group nodes

lsel,s,line,,96     ! shell - thread 2
nsll,,1
cm,t2shell,node

lsel,s,line,,124    ! shell - thread 3
nsll,,1
cm,t3shell,node

lsel,s,line,,152    ! shell - thread 4
nsll,,1
cm,t4shell,node

lsel,s,line,,180    ! shell - thread 5
nsll,,1
cm,t5shell,node

lsel,s,line,,208    ! shell - thread 6
nsll,,1
cm,t6shell,node

lsel,s,line,,236    ! shell - thread 7
nsll,,1
cm,t7shell,node

lsel,s,line,,264    ! shell - thread 8
nsll,,1
cm,t8shell,node

lsel,s,line,,292    ! shell - thread 9
nsll,,1
cm,t9shell,node

lsel,s,line,,320    ! shell - thread 10
nsll,,1
cm,t10shell,node

lsel,s,line,,348    ! shell - thread 11
nsll,,1
cm,t11shell,node
```

```
lsel,s,line,,52    ! ring - 1st thread ******************
nsll,,1
cm,t1ring,node

lsel,s,line,,104   ! ring - thread 2
nsll,,1
cm,t2ring,node

lsel,s,line,,132   ! ring - thread 3
nsll,,1
cm,t3ring,node

lsel,s,line,,160   ! ring - thread 4
nsll,,1
cm,t4ring,node

lsel,s,line,,188   ! ring - thread 5
nsll,,1
cm,t5ring,node

lsel,s,line,,216   ! ring - thread 6
nsll,,1
cm,t6ring,node

lsel,s,line,,244   ! ring - thread 7
nsll,,1
cm,t7ring,node

lsel,s,line,,272   ! ring - thread 8
nsll,,1
cm,t8ring,node

lsel,s,line,,300   ! ring - thread 9
nsll,,1
cm,t9ring,node

lsel,s,line,,328   ! ring - thread 10
nsll,,1
cm,t10ring,node

lsel,s,line,,356   ! ring - thread 11
nsll,,1
cm,t11ring,node


/com surfaces at o-ring

lsel,s,line,,21,22  ! collar
nsll,,1
cm,cseal,node

lsel,s,line,,78     ! plug
nsll,,1
cm,pseal,node
```

```
lsel,all
nall

/com generate gap elements
type,7
real,7
gcgen,t1ring,t1shell
gcgen,t2ring,t2shell
gcgen,t3ring,t3shell
gcgen,t4ring,t4shell
gcgen,t5ring,t5shell
gcgen,t6ring,t6shell
gcgen,t7ring,t7shell
gcgen,t8ring,t8shell
gcgen,t9ring,t9shell
gcgen,t10ring,t10shell
gcgen,t11ring,t11shell

gcgen,pseal,cseal

/com bolts ********************************************************
csys,12                      ! same as shield plug local,12,0,,-2.37
k,3000,BoltIR,2.310+.001     ! k,2100,BoltIR,2.00
k,3001,BoltOR,2.310+.001     ! k,2101,BoltOR,2.000
a,3000,3001,1011,1012        ! connect to ring above 1st thread
type,3
real,1
mat,2
esize,8*elsize
amesh,84


/com merge coincident nodes on area boundaries
*************************************
esel,s,type,,2     ! shell collar
nsle               ! select nodes based on elements
ksln               ! select keypoints based on nodes
nummerg,node
nummrg,elem
nummerg,kp

esel,s,type,,4     ! lifting & locking ring
nsle
ksln               ! select keypoints based on nodes
nummerg,node
nummrg,elem
nummerg,kp

esel,s,type,,6     ! shield plug
nsle
ksln               ! select keypoints based on nodes
nummerg,node
nummrg,elem
nummerg,kp

alls
```

```
/com generate gap elements ************************************************
lsel,s,line,,370        ! line on "bolt"
nsll,,1                 ! select nodes on line
cm,boltgaps,node        ! group nodes as "boltgaps"

lsel,s,line,,68         ! line on plug
nsll,,1                 ! select nodes on line
cm,pluggaps,node        ! group nodes as "pluggaps"

*get,num_bolt,node,,count                    ! number of nodes = "num_bolts"
*dim,node_i,,num_bolt                        ! dimension arrays for nodes
*dim,node_j,,num_bolt

/com sort nodes on bolt
cmsel,,boltgaps
*get,yval,node,,mnloc,y                      ! get y-value
*do,i,1,num_bolt
    *get,min_r,node,,mnloc,x                 ! get value of minimum radius
    node_i(i)=node(min_r,yval,0)             ! get node number at minimum radius
    nsel,u,node,,node_i(i)                   ! remove selected node from group
*enddo

/com sort nodes on plug
cmsel,,pluggaps
*get,yval,node,,mnloc,y                      ! get y-value
*do,i,1,num_bolt
    *get,min_r,node,,mnloc,x                 ! get value of minimum radius
    node_j(i)=node(min_r,yval,0)             ! get node number at minimum radius
    nsel,u,node,,node_j(i)                   ! remove selected node from group
*enddo

alls

/com generate elements
type,8
real,8
*do,i,1,num_bolt
    e,node_j(i),node_i(i)
*enddo

nall
eall

/com relax convergence tolerances
cnvtol,f,,.01      ! 1% on force (10*default)
! cnvtol,m,,.01     ! 1% on moment (10*default)

/com boundary conditions **************************************************
csys,0
nsel,s,loc,x,rplug1       ! inside of plug
!d,all,ux,0.0              ! fix radially

nsel,s,loc,y,-12.0        ! base of shell
d,all,uy,0.0              ! fix vertical (rollers)
```

```
nall
eall
save
fini
/solution ! ********************************************************

/com first step to close gaps
tunif,70
tref,70
/title,MCO Closure Threads - Load Step 1 - Thread Closure
kbc,1                          ! set change loads for load step 1
nsubst,1                       ! number of substeps
neqit,10                       ! number of equilibrium interations

!sfl,454,pres, 136000/BoltA     ! 136 kips/Bolt Area at line 59 - lifting/locking
ring
!sfl,68,pres, 136000/BoltA      ! 136 kips/Bolt Area at line 67 - shield plug

/com displace ring upwards to close gap
esel,s,type,,4                 ! select ring elements
nsle                           ! select nodes on ring
nsel,r,loc,x,15.9/2            ! inside of ring
d,all,uy,.0046                 ! move ring up
nall
eall

/com displace shield plug downwards to close gap
esel,s,type,,6                 ! select plug elements
nsle                           ! select nodes on plug
nsel,r,loc,x,rplug1            ! inside of plug
d,all,uy,-.00101               ! move plug down

alls

lswrite     ! ************************************************************

/title,MCO Closure: 190 kip preload, No Friction, 70F (L.S. 2)
kbc,0                          ! ramp change loads for load step 2
nsubst,10                      ! number of substeps
neqit,10                       ! number of equilibrium interations
autots,on
nropt,auto
nlgeom,on

esel,s,type,,4                 ! select ring elements
nsle                           ! select nodes on ring
ddele,all,uy                   ! remove y displacement

esel,s,type,,5,6               ! select ring elements
nsle                           ! select nodes on ring
ddele,all,uy                   ! remove y displacement
nall
eall

save
lswrite  ! ************************************************************
```

```
/title,MCO Closure: 190 kip preload + 150psi, 392F (L.S. 3)
kbc,0                          ! ramp change loads for load step 3
nsubst,5                       ! number of substeps
autots,on
nropt,auto

/com apply pressure load
P_int=150                 ! nominal internal pressure
PA_real=rplug2*rplug2
PA_model=(rplug2*rplug2)-(rplug1*rplug1)
P_int_p=P_int*PA_real/PA_model  ! corrected pressure on plug bottom

lsel,s,line,,82           ! shield plug - seal groove
lsel,a,line,,86,87        ! shield plug side
lsel,a,line,,11           ! collar at base
lsel,a,line,,15           ! collar at taper
lsel,a,line,,18
lsel,a,line,,23
lsel,a,line,,22           ! collar at seal
sfgrad                    ! reset gradient (none used)
sfl,all,pres,P_int        ! apply pressure

/com shield plug bottom
lsels,s,line,,85          ! shield plug bottom
sfl,all,pres,P_int_p
alls
sftran                    ! transfer line loads to elements

tunif,392                 ! max. temp. @ 150 psi (200 degC)

save
lswrite  ! ****************************************************************

/title,MCO Closure: 190 kip preload + 75 psi, Hot (707F) (L.S. 4)
kbc,0                          ! ramp change loads for load step 3
nsubst,5                       ! number of substeps
autots,on
nropt,auto

/com apply pressure load
P_int=75                  ! nominal internal pressure
PA_real=rplug2*rplug2
PA_model=(rplug2*rplug2)-(rplug1*rplug1)
P_int_p=P_int*PA_real/PA_model  ! corrected pressure on plug bottom

lsel,s,line,,82           ! shield plug - seal groove
lsel,a,line,,86,87        ! shield plug side
lsel,a,line,,11           ! collar at base
lsel,a,line,,15           ! collar at taper
lsel,a,line,,18
lsel,a,line,,23
lsel,a,line,,22           ! collar at seal
sfgrad                    ! reset gradient
sfl,all,pres,P_int        ! apply pressure
```

```
/com shield plug bottom
lsels,s,line,,85          ! shield plug bottom
sfl,all,pres,P_int_p
alls

tunif,707                      ! max. temp. @ 75 psi (375 degC)

save
lswrite  ! ************************************************************

lssolve,1,4
save
fini

/post1
set,2        ! PRELOAD ONLY

/com - sections through collar at base of threads (from bottom to top)
esel,s,type,,2        ! select collar elements only
lpath,   12, 675      ! thread 1 (bottom)
prsect,-1
lpath,   44, 687      ! thread 2
prsect,-1
lpath, 1849,1928      ! thread 3
prsect,-1
lpath, 2129,2208      ! thread 4
prsect,-1
lpath, 2409,2488      ! thread 5
prsect,-1
lpath, 2689,2768      ! thread 6
prsect,-1
lpath, 2969,3048      ! thread 7
prsect,-1
lpath, 3249,3328      ! thread 8
prsect,-1
lpath, 3529,3608      ! thread 9
prsect,-1
lpath, 3809,3888      ! thread 10
prsect,-1
lpath, 4089,4168      ! thread 11 (top)
prsect,-1

/com section at thread relief ************************************************
*do,i,2,4,1
    set,i
    lpath,2,671
    prsect,-1
*enddo
alls

/com - bolt loads
*********************************************************************

*do,i,2,4,1
    /gopr
    set,i
```

```
    /com bolt preload - membrane stress
    esel,s,type,,3        ! select bolt elements
    lpath,4642,990        ! section at midthickness
    prsect,-1

    /com bolt preload - gap element loads
    esel,s,type,,8            ! select contac12 gap elements
    etable,boltload,smisc,1   ! store fn (normal force)
    pretab                    ! list normal force
*enddo
etable,eras

/com - seal stop loads ** (nforce)
*****************************************************

esel,s,type,,6                  ! shield plug elements
nsle                            ! elements on shield plug
lsel,s,line,,78                 ! line at seal stop
nsll,r,1                        ! select nodes on line

*do,i,2,4,1
    /gopr
    set,i
    nforce
*enddo


/com - seal stop loads **(gap element loads)
***********************************************

/page,,,10000                   ! lines of output per page
lsel,s,line,,21,22              ! lines on collar
lsel,s,line,,78                 ! line on plug
nsll                            ! select nodes on lines
esln                            ! select elements on nodes
esel,r,type,,7                  ! reselect contac48 gap elements only

*do,i,2,4,1
    /gopr
    set,i
    etable,sealstop,smisc,1     ! store normal force
    pretab                      ! print normal force
*enddo

/com - print reaction forces
*************************************************************
alls
*do,i,2,4,1
    /gopr
    set,i
    prrs                        ! print reaction forces
*enddo

alls
```

```
/com, Generate contour plots
set,last
/dscale,,1
/edge,,1
eplot
plnsol,s,int
PLNSOL,U,X,0
FINISH

exit,nosa
```

COMPUTER RUN COVER SHEET

Project Number:	KH-8009-8
Computer Code:	ANSYS®-PC 386/486
Software Version:	Version 5.3 Release 2
Computer System:	Windows NT 3.51 (Build 1057) Pentium Pro 200 Processor
Computer Run File Number:	KH-8009-8-04
Unique Computer Run Filename:	THRD3.out
Run Description:	Stress Analysis of the MCO Thread/Closure
Run Date / Time:	16 April 1997 12:43:44 AM

Bob V. Winkel 4/18/97

Prepared By: Bob V. Winkel Date

Ward Ingles 4-17-97

Checked By: Ward Ingles Date

PARSONS	CALCULATION PACKAGE	FILE NO:	KH-8009-8-05
		DOC. NO.	HNF-SD-SNF-DR-003, Rev. 0, Appendix 7
		PAGE	1 of 85

PROJECT NAME:	CLIENT:
MCO Final Design	Duke Engineering & Services Hanford, Inc.

CALCULATION TITLE:

STRESS ANALYSIS OF THE MARK 1A STORAGE AND SCRAP BASKETS

PROBLEM STATEMENT OR OBJECTIVE OF CALCULATION:

PERFORM A STRESS ANALYSIS OF THE MARK 1A STORAGE AND SCRAP BASKETS IN ACCORDANCE WITH REVISION 3 OF THE MULTI-CANISTER OVERPACK (MCO) PERFORMANCE SPECIFICATION (REFERENCE 1). FOUR LOADING CONDITIONS ARE CONSIDERED:

1. LIFTING AT A MAXIMUM TEMPERATURE OF 100° C.
2. DEADWEIGHT STACKING INSIDE THE MCO AT A DESIGN TEMPERATURE OF 375° C.
3. VERTICAL DROP LOADING OF 35 G'S AT A MAXIMUM TEMPERATURE OF 132°C.
4. HORIZONTAL DROP LOADING OF 101 G'S AT A MAXIMUM TEMPERATURE OF 132° C.

CRITERIA ARE BASED ON ANSI N14.6 AND THE ASME CODE, SUBSECTION NG.

QA Review 4/18/97

DOCUMENT REVISION	AFFECTED PAGES	REVISION DESCRIPTION	PREPARED BY INITIALS / DATE	CHECKED BY INITIALS / DATE	APPROVED BY INITIALS / DATE
0	1-85	Initial Issue	Bob Winkel BW 4/10/97	Joe Nichols JN 4/17/97	Charles Temus 4/14/97

TABLE OF CONTENTS

1. INTRODUCTION 6

2. REFERENCES 6

3. ASSUMPTIONS 7

4. GEOMETRY 8

5. MATERIAL PROPERTIES 11

6. ACCEPTANCE CRITERIA 11

6.1 LIFTING LOADS 11
6.2 DEADWEIGHT LOADS 13
6.3 DROP LOADING CONDITIONS 13
6.4 WELD CRITERIA 15

7. LOAD CONDITIONS & COMBINATIONS 15

8. STRESS ANALYSIS CALCULATIONS 16

8.1 CENTER PIPE 17
8.1.1 Vertical Drop Load Condition 17
8.1.2 Horizontal Drop Load Condition 19
8.1.3 Center Pipe/Bottom Plate Weld 20
8.1.4 Center Coupling 21
8.2 SUPPORT ROD 23
8.3 BOTTOM PLATE 27
8.3.1 Discussion of Bottom Plate Load Conditions 28
8.3.2 ANSYS Models 28
8.3.3 Vertical Drop Load Condition Evaluation 32
8.3.4 Horizontal Drop Analysis 38
8.4 SCRAP BASKET SHROUD 45
8.5 LOAD DISTRIBUTION AND BASKET INTERFACE CONSIDERATIONS 47
8.6 COMPONENT STRESS RESULTS SUMMARY 52

9. BASKET/MCO INTERFACE COMPONENTS 53

LIST OF FIGURES

FIGURE 1. 60° SECTOR OF MARK 1A STORAGE BASKET STRUCTURAL COMPONENTS. 9
FIGURE 2. ILLUSTRATION OF SUPPORT ROD LOAD ECCENTRICITY. 27
FIGURE 3. 60 DEGREE SECTOR MODEL OF BASKET WITH HOLES. 30
FIGURE 4. 60 DEGREE SECTOR ANSYS MODEL OF BASKET WITHOUT HOLES. 31
FIGURE 5. 180 DEGREE ANSYS MODEL OF BASKET USED FOR HORIZONTAL DROP ANALYSES. 32
FIGURE 6. ELASTIC STRESS INTENSITY CONTOURS, 35G VERTICAL DROP, NO-HOLE MODEL. 35
FIGURE 7. ELASTIC STRESS INTENSITY CONTOURS, 35G DROP LOADING, DETAILED HOLE MODEL. 36
FIGURE 8. ELASTIC/PLASTIC STRESS INTENSITY CONTOURS, 35G VERTICAL DROP, NO-HOLE MODEL. 39
FIGURE 9. PLASTIC STRAIN CONTOURS, 35G VERTICAL DROP, NO-HOLE MODEL. 40
FIGURE 10. BOTTOM PLATE DISTORTION ILLUSTRATION FOR HORIZONTAL DROP MODELING. 41
FIGURE 11. 101G HORIZONTAL DROP STRESS INTENSITY CONTOURS, INELASTIC ANALYSIS. 43
FIGURE 12. HORIZONTAL DROP G LOAD VERSUS MAX. VERTICAL DISPLACEMENT, INELASTIC ANALYSIS. 44
FIGURE 13. SUPPORT ROD DEFORMED SHAPE PREDICTIONS, 0.030" VERTICAL DEFLECTION. 50
FIGURE 14. DEFORMATION RESPONSE OF MARK 1A BASKET SUPPORT RODS. 51

LIST OF TABLES

TABLE 1. MARK 1A BASKET STRUCTURAL COMPONENTS 10
TABLE 2 ASME CODE MATERIAL PROPERTIES FOR TYPE 304L STAINLESS STEEL 12
TABLE 3 ALLOWABLE STRESSES - DEADWEIGHT 13
TABLE 4. ALLOWABLE STRESSES FOR DROP LOADING 14
TABLE 5. VERTICAL DROP STRESS INTENSITY RESULTS SUMMARY. 37
TABLE 6. SUMMARY OF MARK 1A STORAGE BASKET STRESS RESULTS 52

LIST OF APPENDICES

APPENDIX A 57

1. INTRODUCTION

This calculation documents the evaluation of the Mark IA Storage and Scrap Baskets for lifting, deadweight, and drop accident loading. The structural adequacy evaluation is based upon ANSI N14.6 for the lifting loading and Section III, Subsection NG of the ASME Code for the deadweight stacking and drop load conditions. As discussed in Section 4, most of the Mark 1A Storage and Scrap Basket structural components are identical. This permitted the combining of the Mark 1A basket evaluations into a single report.

2. REFERENCES

1. DE&S, 1997, *Performance Specification for the Spent Nuclear Fuel Multi-Canister Overpack*, HNF-S-0426, Rev. 3, Duke Engineering and Services Hanford, Richland, Washington.

2. DE&S, 1996, "K-Basin SNF Storage Basket Mock-Up Mark 1A" and "K-Basin SNF Scrap Basket Mock-Up Mark 1A", Drawing Nos. H-2-82860 & H-2-82865, Rev. 0, Duke Engineering and Services Hanford, Richland, Washington.

3. ASME, 1995, *ASME Boiler and Pressure Vessel Code, Section II, Materials, Part D--Properties*, American Society of Mechanical Engineers, New York, New York.

4. ASME, 1995, *ASME Boiler and Pressure Vessel Code, Section III, Subsection NG*, American Society of Mechanical Engineers, New York, New York.

5. ASME, 1995, A*SME Boiler and Pressure Vessel Code, Section III, Subsection NF*, American Society of Mechanical Engineers, New York, New York.

6. ANSI, 1993, *ANSI National Standard for Radioactive Materials- Special Lifting Devices for Containers Weighing 10,000 Pounds (4500 kg) or More*, American National Standards Institute, New York, New York.

7. Roark, R. J. and Young, W. C., 1975, *Formulas for Stress and Strain*, 5th Edition, McGraw-Hill, New York, New York.

8. Baumeister, T., editor, 1967, *Standard Handbook for Mechanical Engineers,* 7th Edition, McGraw-Hill, New York, New York.

9. Myers, J. A., 1962, *Handbook of Equations for Mass and Area Properties of Various Geometrical Shapes,* US Naval Ordnance Test Station, China Lake, California.

10. Bowles, J. E., 1988, *Foundation Analysis and Design,* 4th Edition, McGraw-Hill, New York City, New York.

11. AISC, 1989, *Manual of Steel Construction, Ninth Edition,* American Institute of Steel Construction, Chicago, Illinois.

12. Pugh, C. E, et al, 1972, *Currently Recommended Constitutive Equations for Inelastic Design Analysis of FFTF Components,* ORNL-TM-3602, Oak Ridge National Laboratory, Oak Ridge, Tennesee.

3. ASSUMPTIONS

1. All welds made and inspected in accordance with ASME Code, Section III, Subsection NG (Reference 4). For the Mark 1A Storage and Scrap Basket welds, a "surface visual examination" is assumed.

2. For the vertical drop loading when the baskets are stacked within the MCO, it was conservatively assumed that the basket support rods are in alignment, with the exception of the bottom basket, which is rotated 30° relative to the baskets above. This configuration produces the maximum bending in the basket bottom plate.

3. Since the Reference 1 Performance Specification does not specify the density of the scrap material in a loaded scrap basket, a density is calculated based upon the assumption that the total basket scrap weight is equal to the total fuel weight (48 fuel rods) in a loaded Mark 1A storage basket.

4. For the horizontal drop evaluation, it was assumed that the top end support for the center pipe, which interfaces with either the basket above or the bottom of the shield plug assembly, is maintained throughout the drop. See Section 9 for a discussion and justification of this assumption.

5. Other assumptions as noted within the calculation documentation.

4. GEOMETRY

The Mark IA Storage and Scrap Basket geometry's are defined in Drawing Nos. H-2-828060 and H-2-828065, respectively. The primary structural components for both basket designs (bottom plate, support rods, and center pipe) are identical. The primary structural components and other significant components are identified in the Figure 1 sketch of the storage basket. The scrap basket has an additional component in the form of six radial stiffener plates which span between each support rod and the center pipe. The radial plates are welded to both the support rods and center pipe, and therefore enhance the buckling strength of these components. Thus, these components are evaluated for the more conservative application, i.e. the storage basket.

A summary of the function of each structural component is provided in Table 1. The bottom plate is constructed from a 1-1/8-in. plate with 1/4-inch flow holes on one-inch centers (equilateral triangle grid pattern). Final machining operations will bring the minimum thickness to nearly one inch. A uniform thickness of one inch is therefore conservatively assumed for the calculations within this report.

The center pipe is fabricated from six-inch, XXS pipe having a wall thickness of 0.864 inches. The trapezoidal geometry of the support rods is selected to provide the maximum cross section for the available space. A fourth structural component is the "center coupling", located at the top of the center pipe. The center coupling interfaces with a grappling device during lifting operations and slips into the adjacent basket, above, when the baskets are stacked inside the MCO. The center coupling is attached to the center pipe using four 1/2-in. coil type spring pins. A single 1/2-in. spring pin is used to attach the center bushing to the bottom of the center pipe as shown. These spring pins have a structural function during lifting operations, and are evaluated for structural adequacy. There is also a thick aluminum fuel-positioning plate (storage basket only) which sits above the bottom plate and a 50-mil sheet metal shroud enveloping the lower half of the basket. These components, plus the center bushing are primarily functional and are not subjected to a structural evaluation.

Both the storage and scrap basket designs include a 0.050-in. sheet metal shroud located on the outside circumference of the baskets (half-height on the storage baskets and full height on the scrap basket). Since the fuel spacer plate in the storage basket prevents significant loading to the shroud, the storage basket shroud is considered to be non-structural. The scrap basket shroud, however, is subjected to a relatively low pressure loading due to the scrap pieces bearing against the shroud, and is subjected to a structural evaluation.

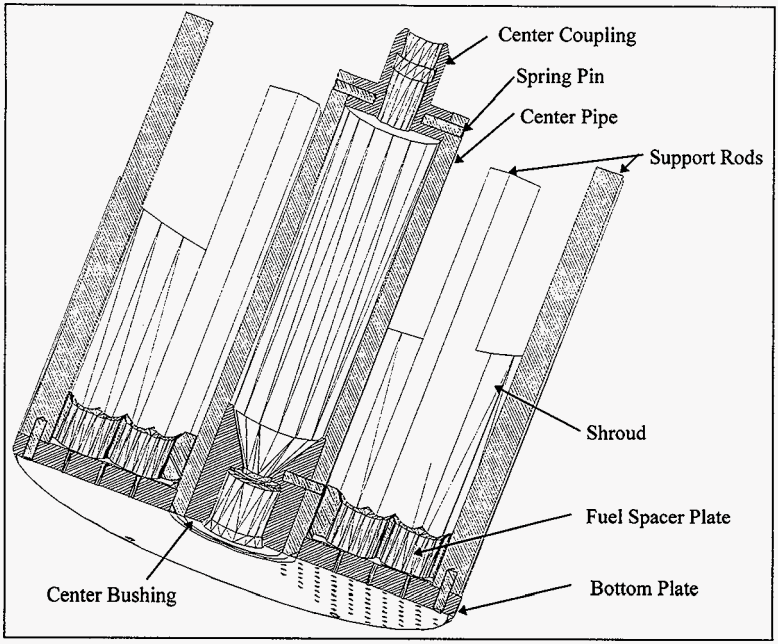

Figure 1. 60° Sector of Mark 1A Storage Basket Structural Components.

Table 1. Mark 1A Basket Structural Components

Component Name	Component Part No. in Dwgs. H-2-828060 & H-2-828065	Structural Functions
Center Pipe	8	(1) Primary load carrying component during lifting operations. (2) Provide support to above baskets when stacked inside the MCO. (3) Provides "void space" boundary for criticality safety, which must be maintained during normal operations and following drop accidents (Reference 1, Section 4.18.3).
Center Coupling	6	Primary load bearing component during lifting operations and a shear support for the center pipe during a horizontal drop accident.
Spring Pins	15	Shear pin support for lifting loads for the center coupling and center bushing.
Support Rod	12	Provide support to above baskets when stacked inside the MCO for normal operations and during vertical drop accidents.
Bottom Plate	9	Support the fuel during normal operations and maintain the position of the center pipe during drop accidents.
Scrap Basket Sheet Metal Shroud	13	Carries the radial pressure due to fuel scrap pieces bearing against the shroud.

5. MATERIAL PROPERTIES

Per the Reference 2 drawings, the Mark 1A Basket components are to be fabricated from 304L stainless steel. The only exceptions are the spring pin design which specifies an SAE 30302 or SAE 30304 material and the non-structural aluminum fuel rack. For this analysis, the only mechanical properties of interest are the elastic modulus, yield strength, ultimate strength, and ASME stress allowable, S_m. The appropriate values are extracted from Reference 3, and are listed in Table 2.

6. ACCEPTANCE CRITERIA

For the lifting, dead weight stacking, and drop loadings considered, the appropriate acceptance criteria is discussed below.

6.1 Lifting Loads

Per Section 4.12.3 of the Reference 1 Performance Specification, the Mark1A basket designs "shall meet the safety factors required by the American National Standards Institute (ANSI) N14.6-1986. The ANSI safety factors apply from 5°C to 100°C". Section 4.2.1.1 of N14.6 specifies that "the load bearing members of a special lifting device shall be capable of lifting three times the combined weight of the shipping container with which it will be used, plus the weight of intervening components of the special lifting device, without generating a combined shear stress or maximum tensile stress at any point in the device in excess of the corresponding minimum tensile yield strength of their materials of construction. They shall also be capable of lifting five times that weight without exceeding the ultimate tensile strength of the materials." ANSI N14.6 also states that the shear stress shall be taken as an average value over the cross section, and that the tensile stress may be due to direct or bending loads. The bending stress is defined as being linear over the cross section.

Table 2
ASME Code Material Properties for Type 304L Stainless Steel

Temperature		E	Sm	Sy	Su
°F	°C	Table TM-1, Group G	Table 2A, p.322	Table Y-1, p.524	Table U, P. 441
-20	--	--	16.7 ksi	25.0 ksi	70.0 ksi
70	--	28.3E+06	--	--	--
100	--	--	16.7 ksi	25.0 ksi	70.0 ksi
200	--	27.6E+06	16.7 ksi	21.3 ksi	66.2 ksi
212	100	27.5E+06	16.7 ksi	21.0 ksi	65.6 ksi
300	--	27.0E+06	16.7 ksi	19.1 ksi	60.9 ksi
700	--	24.8E+06	13.5 ksi	14.9 ksi	56.2 ksi
707	375	24.8E+06	13.5 ksi	14.9 ksi	56.2 ksi
750	--	--	13.3 ksi	14.7 ksi	55.9 ksi
800		24.1E+06	--	--	--

s4allow.xls

Notes 1: Underlined values determined by linear interpolation, other values taken from Section II, Part D of the ASME
2: Value of E taken from Table TM-1 for Material Group

The "load bearing members of a special lifting device" are interpreted to apply to all components of the storage baskets in the load path between the lifting grapple and fuel. At the maximum lifting temperature of 100°C, the ANSI N14.6 allowables are:

$$\frac{Sy}{3} = \frac{21.04ksi}{3} = 7.01ksi$$
$$\frac{Su}{5} = \frac{65.6ksi}{5} = 13.12ksi$$
$$\Rightarrow Use: Pm + Pb \le 7.01ksi$$

6.2 Deadweight Loads

Per Section 4.12.3 of Reference 1, the Mark IA baskets "shall meet the intent of ASME Boiler and Pressure Vessel Code, Section III, subsection NG". For primary membrane and primary membrane plus bending stresses, the allowable stresses of Table 3 apply. The dead weight stacking basket configuration is identical to the vertical drop accident configuration. Since the loading differences far exceed the allowable differences, the vertical drop accident condition obviously bounds the dead weight condition.

Table 3
Allowable Stresses - Deadweight

Temperature		S_m	Design/Level A Stress Limits		
°F	°C	[Table 2]	P_m (S_m)	P_L (1.5 S_m)	(P_m or P_L) + P_b (1.5 S_m)
212	100	16.7 ksi	16.7 ksi	25.1 ksi	25.1 ksi
707	375	13.5 ksi	13.5 ksi	20.3 ksi	20.3 ksi

s4allow.xls

Notes 1: Design & Level A Stress Limits from NG-3221 & NG-3222, respectively.

2: Axial compressive stresses must be limited to values established in accordance with one of the following:

- NB-3133.3 (external pressure)
- NB-3133.6 (axial compression on cylindrical shells)
- NF-3322.1(c) (column type members)
- Code Case N-284 (shell structures)

6.3 Drop Loading Conditions

From Table 3 of the Reference 1 Performance Specification, the bounding vertical drop loading is 35 g's and the horizontal drop loading is 101 g's. The only potential sequential drop (vertical followed by horizontal) in the Performance Specification is the "Dropped with Cask" case, which specifies a 33.5g vertical(corner)/101g horizontal. In this report, the sequential drop is conservatively evaluated as a 35g/101g combination. A maximum drop temperature of 132° C (270° F) is specified in Rev. 3 of Reference 1, which was released following the completion of the Mark1A basket analyses. The previous revision of Reference 1 specified a maximum drop temperature of 200°C. Since the existing analyses were conservative, not all of the analyses were repeated when Rev. 3 was released.

However, the summary table given in Section 8.6 was modified to reflect the Rev. 3 drop temperature reduction. For Level D events, the ASME Subsection NG acceptance criteria is specified in Appendix F, Para. F-1440, which refers to Para. F-1300, with some specified exceptions. The appropriate allowable stresses are listed in Table 4.

Note that allowables are listed for both the original and revised drop temperatures. As indicated, the decrease in drop temperature has a significant influence on the allowables, particularly for allowables which are a function of the ultimate strength.

Table 4. Allowable Stresses for Drop Loading

Stress Category	ASME Appendix F Paragraph No.	Stress Limit Criteria	Allowable Stress Value @ 200°C (ksi)	Allowable Stress Value @ 132°C (ksi)
Primary Membrane	F-1331.1(a)	$2.4S_m$[1] (Elastic Analysis)	38.2	40.1
	F-1341.2(a)	$0.7S_u$ (Plastic Analysis)	41.1	47.1
Primary Membrane + Bending	F-1331.1(c)(1)	$1.5(2.4S_m)$[1] (Elastic Analysis)	57.2	60.1
	F-1341.2(b)	0.9Su (Plastic Analysis)	52.8	60.6
Ave. Primary Shear	F-1331.1(d)	$0.42S_u$	24.7	28.3
Center Pipe Compression	F-1331.5(b)	150% of NB-3133 Limit	---	---
Support Rod Buckling[2]	F-1334.3[2]	F-1334.3(1) P/P_y Equations	---	---

Notes: 1. Based upon the lesser of $2.4S_m$ and $0.7S_u$.

2. Linear type component support criteria used for support rod column buckling.

In addition to the Table 4 stress limits, Section 4.19.3 of the Reference 1 Performance Specification stipulates a nuclear criticality safety requirement that a nominal void of 6.625 in. in diameter be maintained at the basket centerline. For all load conditions including the

drop accidents, this centerline void cannot deviate from the centerline by more than two inches. For the vertical drop, this requirement is met by demonstrating conformance to the ASME Code center pipe buckling requirements. For the horizontal drop, this requirement is addressed by predicting the maximum transverse deformation (elastic/plastic) in the center pipe for the horizontal drop loading.

6.4 Weld Criteria

There is only one structural weld on the Mark IA Storage Basket, the center pipe/bottom plate connection weld. Weld design criteria for Subsection NG is specified in Para. NG-3350. Table NG-3352-1 specifies weld quality factors for various types of welds and examination methods. For the Mark IA Storage Baskets, a "surface visual examination" was assumed. Para. NG-3352 states that the quality factors are applied by "multiplying the allowable stress limit" by the appropriate quality factor specified in Table NG-3352-1. However, NG-3352 has no specific direction for defining the "allowable stress limit" for fillet and groove welds. Based upon a detailed fillet weld analysis described in Appendix 8, a reasonably conservative approach is to use the base metal stress allowables as the "allowable stress limit" or more specifically, the weld load divided by the throat area is compared to the base metal membrane stress allowable. As indicated above discussion, the weld design is controlled by the drop accident conditions. Thus, the appropriate base metal allowable is 2.4Sm or 38.2 ksi. For the basket weld, the appropriate quality factor from Table NG-3352 is 0.35 (single fillet/single groove weld, visual inspection), resulting in a weld allowable of 38.2(0.35) = 13.4 ksi. For a double fillet weld, the weld quality factor is 0.4, resulting in an allowable of 38.2(0.4) = 15.3 ksi.

7. LOAD CONDITIONS & COMBINATIONS

As discussed above, the Mark IA Storage Baskets are evaluated for four load cases: (1) lifting, (2) dead weight stacking inside the MCO, (3) a 35g vertical drop, and (4) a 101g horizontal drop. Each of these load conditions are independent, and are not combined. There is, however, the concern for a sequential drop, i.e. an end drop followed by a horizontal drop. This concern is addressed by considering the examining the maximum plastic distortion occurring in the vertical drop, which could potentially impact the buckling strength for a subsequent horizontal drop.

8. STRESS ANALYSIS CALCULATIONS

The Mark IV Storage Baskets are evaluated using both hand calculations (Mathcad) and finite element calculations (ANSYS). The finite element calculations are limited to stress predictions for the relatively complex bottom plate (Section 8.3).

CALCULATION INPUT PARAMETERS:

$d_r := 1.375\,in$	Support Rod Diameter
$l_r := 22.318 \cdot in$	Support Rod Length Above Bottom Plate (conservative, final length = 22.114")
$K_{rc} := 2.1$	Support Rod Effective Length Factor in Buckling (bottom fixed, top free, Ref. 1)
$K_{rp} := 0.8$	Support Rod Effective Length (fixed-pinned, Ref. 1)
$S_y := 19900 \cdot \frac{lb}{in^2}$	304L SS Yield Strength @ Max. Drop Temp. (200 DegC)
$E := 27.2 \cdot 10^6 \cdot \frac{lb}{in^2}$	304L SS Young's Modulus @ Max. Drop Temp. (132 DegC)
$D_o := 6.625 \cdot in$	Center Pipe O.D.
$T := 0.864\,in$	Center Pipe Wall Thickness
$A_p := 15.64\,in^2$	Center Pipe Area per Mark's Hndbk., 6-in. Sch. XXS
$W_b := 2300 \cdot lb$	Mark-IA Loaded Basket Weight
$s_p := 20.02 \cdot in^3$	Center Pipe Section Modulus
$r_p := 2.06\,in$	Center Pipe Radius of Gyration (Ref.: Mark's Handbook)
$w_p = 53.16 \cdot \frac{lb}{ft}$	Center pipe weight/ft

8.1 Center Pipe

The center pipe was evaluated for both a 35g vertical drop and a 101g horizontal drop event. For the vertical drop, the controlling ASME Code limit is axial compression (buckling). For the horizontal drop, beam bending (Pm) controls.

8.1.1 Vertical Drop Load Condition

Criteria: ASME Appendix F, Para. F-1331.5(b)

$$D_o := 6.625\,in$$

$$T := 0.864\,in$$

$$A := \frac{0.125}{\left(\frac{\frac{D_o}{2} - T}{T}\right)}$$

$$A = 0.044$$

$$B := 12200 \cdot \frac{lb}{in^2}$$

From Fig. HA-3 & Corresponding Table, > S_m-- Use B for Center Pipe Capacity

$A_p = 15.64 \cdot in^2$ Pipe Area per Mark's Hndbk., 6-in. Sch. XXS

$P_{pc} := B \cdot A_p \cdot 1.5$

$P_{pc} = 2.862 \cdot 10^5 \cdot lb$ Center Pipe Capacity, Level D Event

Check Center Pipe for Column Buckling:

Using F-1334.3(b) (Max. Axial Compression Load for Linear Support):

$$E := 27.2 \cdot 10^6 \cdot \frac{lb}{in^2}$$

$K_p := 0.8$ Conservatively assumed pinned @ Top (Reference 1, Table C-C2.1)

$l_p := l_r$

$r_p := 2.06 \cdot in$

$$\lambda := \frac{K_p \cdot l_p}{r_p} \cdot \frac{1}{\pi} \cdot \sqrt{\frac{S_y}{E}}$$

$\lambda = 0.073$ 1st Equa. in F-1334.3 Applies

$P_y := S_y \cdot A_p$

$P_y = 3.112 \cdot 10^5 \cdot lb$

$$P := \frac{1 - \frac{\lambda^2}{4}}{1.11 + 0.50\lambda + \left(0.17\lambda^2 - 0.28\lambda^3\right)} \cdot P_y$$

$P = 2.709 \cdot 10^5 \cdot lb$ < Axial Cylinder Capacity, Column Buckling Controls

$$\frac{P}{35 \cdot W_b \cdot 5} = 0.673$$

Thus, the bottom basket center pipe Code capacity = 67.3% of the total 35g Vertical Drop Loading. As discussed in Section 8.5, the center pipe/support rod vertical load sharing is a function of the component length-related tolerances. Section 8.5 demonstrates that for the specified tolerances, the center pipe and support rods will share the combined loading before reaching individual component capacities. Thus, the appropriate safety margin is for the center pipe/support rod combined capacity. As shown at the end of section 8.2, the minimum combined center pipe/support rod capacity exceeds the total vertical drop loading by over 4%.

8.1.2 Horizontal Drop Load Condition

For the horizontal drop, the center pipe is loaded in beam bending. The bounding beam bending stress can be calculated by assuming a propped-cantilever beam. The loading consists of a 101g loading of 8 fuel elements (60° section), plus the pipe inertia.

$$w_t := w_p + \frac{39.7 \cdot lb \cdot 8}{l_p}$$

Single Fuel Pin Weight = 39.7 lb per Reference 1

$$w_t = 223.928 \cdot \frac{lb}{ft}$$

The maximum moment in the center pipe due to this fuel inertial loading can be obtained by assuming a simply-supported or a propped cantilever beam (same moment):

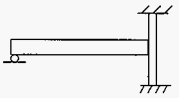

$$M_p := \frac{w_t \cdot l_p^2}{8} \cdot 101$$

Moment for 101g horizontal drop

$$M_p = 9.779 \cdot 10^3 \cdot lb \cdot ft$$

$$f_b := \frac{M_p}{s_p}$$

$$f_b = 5.859 \cdot 10^3 \cdot \frac{lb}{in^2}$$

From F-1334.4, the allowable bending stress is $f(S_y)$, where f is the plastic shape factor.

Conservatively assuming f = 1,

$$F_b := S_y$$

$$\text{Ratio} := \frac{f_b}{F_b}$$

$\text{Ratio} = 0.333$ Center Pipe OK for Hor. Drop

8.1.3 Center Pipe/Bottom Plate Weld

The critical loads for the center pipe/bottom plate weld are the drop loads. For the vertical drop load, it was assumed that 42% of the fuel inertia loading is carried by the weld, as discussed in Section 8.5. For the horizontal drop, it was conservatively assumed that the weld carries the maximum bending moment in the pipe (fixed-end moment, plate fixed against rotation).

Vertical Drop Load:

$$w := \frac{48 \cdot 39.7 \cdot lb \cdot 35 \cdot .42}{D_o \cdot \pi}$$

$$w = 1.346 \cdot 10^3 \cdot \frac{lb}{in}$$

Horizontal Drop Load:

$$w = f_b \cdot T$$

$w = 5.062 \cdot 10^3 \cdot \frac{lb}{in}$ Maximum Force/in., Horizontal Drop Load Critical

$$\sigma_w := \frac{w}{\left(\frac{\sqrt{2}}{2}\right) \cdot \frac{3}{8} \cdot in \cdot 2}$$

$$\sigma_w = 9.545 \cdot 10^3 \cdot \frac{lb}{in^2}$$

$n := 0.35$ Weld Quality Factor

$$Ratio := \frac{\sigma_w}{n \cdot 2.4 \cdot S_m}$$

$Ratio = 0.715$ 3/8" Welds OK

8.1.4 Center Coupling

The center coupling is an extension of the center pipe which interfaces with adjacent baskets and the MCO shield plug. It is loaded during lifting and during a horizontal drop. During deadweight stacking, the center coupling interface with the center bushing is dimensioned to prevent loading of the center coupling. It attaches to the center pipe with four 1/2" spring pins. The minimum section of the coupling is the lifting grapple interface, which has an O.D./I.D. of 2.66"/2.00":

Check net section for tension (lifting load) and shear (hor. drop loading)

$$A_{min} := \left[(2.66 \cdot in)^2 - (2.00 \cdot in)^2\right] \cdot \frac{\pi}{4}$$

$$A_{min} = 2.416 \cdot in^2$$

$$\sigma_{lift} := \frac{W_b}{A_{min}}$$

$$\sigma_{lift} = 972.855 \cdot \frac{lb}{in^2}$$

$$Ratio := \frac{\sigma_{lift}}{\left(\frac{S_y}{3}\right)}$$

$Ratio = 0.166$

Thus, the center coupling is O.K. for the lifting load condition. For the horizontal drop, check the minimum section for average shear adequacy. Conservatively ignore bending resistance of bottom plate connection (top end reaction = 1/2 of 101g loading of eight 39.7 lb fuel pins).

$$\tau_{drop} := \frac{8 \cdot 39.7 \cdot lb \cdot 101}{2 \cdot A_{min}}$$

$$\tau_{drop} = 6.64 \cdot 10^{3} \cdot \frac{lb}{in^2}$$

$$S_u := 58800 \frac{lb}{in^2}$$

$$Ratio := \frac{\tau_{drop}}{0.42 \cdot S_u}$$

$$Ratio = 0.269$$

Therefore, the center coupling is also adequate for the horizontal drop 101g loading.

The center pipe/center coupling connector pins (pin every 90° = 4 pins total) are specified as 1/2", heavy duty SAE 30302 or SAE 30304 coiled type spring pins, conforming to ASME Standard B18.8.2, Table11. The ASME standard specified shear strength of the pins is 25,000 lb in double shear (12,500 lb, single shear). The only significant pin loads occur during lifting operations, which requires a limit of 1/5 of the ultimate strength.

$$f_{su} := 12500 \cdot lb$$

$$W_b := 2350 \cdot lb$$

$$Ratio := \frac{W_b}{\left(\frac{4 \cdot f_{su}}{5}\right)}$$

$$Ratio = 0.235$$

Thus, the center coupling pins are adequate for the lifting load condition.

This same 1/2" 302/304 spring pin design is also used to connect the bottom bushing to the center pipe. The only load this pin carries is the dead weight of the bushing. A conservative dead weight of the bushing can be obtained using the O.D. (5.00") and the minimum I.D. (2.65"):

$$W_b = (\pi/4)[(5.00)^2 - (2.65)^2](0.286) = 4.04 \text{ lb.}$$

Ratio = 4.04/(12,500/5) = 0.002 O.K.

8.2 Support Rod

Support rod capacity calculations were performed for both a pinned and free top boundary condition. As indicated, the support rod capacity is controlled by buckling.

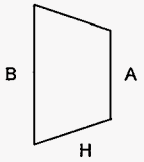

Trapezoidal Support Rod Dimensions

$A := 1.22 \cdot in$

$B := 3.07 \cdot in$

$H := 1.34 \cdot in$

$$I_x = \frac{H^3 \cdot (A^2 + 4 \cdot A \cdot B + B^2)}{36 \cdot (A + B)}$$ Reference 9

$$I_x = 0.403 \cdot in^4$$

$$I_y = \frac{H \cdot (A + B) \cdot (A^2 + B^2)}{48}$$ Reference 9

$I_y = 1.307 \cdot in^4$

$l_r := 22.318 \cdot in$

$A_r := \frac{A + B}{2} \cdot H$

$A_r = 2.874 \cdot in^2$

$K_{rc} := 2.1$ Cantilevered (No lateral restr. @ top, Reference 1, Table C-C2.1)

$K_{rp} := 0.8$ Pinned (lateral restr. @ top, Reference 1, Table C-C2.1)

$r_x := \sqrt{\frac{I_y}{A_r}}$

$r_x = 0.674 \cdot in$

$\frac{K_{rc} \cdot l_r}{r_x} = 69.503$

$\frac{K_{rp} \cdot l_r}{r_x} = 26.477$

For Level D Support Rod Capacity, Use F-1334.3(b) (Max. Axial Compression Load for Linear Support):

$S_y := 19900 \cdot \frac{lb}{in^2}$ 304L Yield Strength @ Max. Drop Temp. (200 degC)

$E := 27.2 \cdot 10^6 \cdot \frac{lb}{in^2}$

$\lambda_c := \frac{K_{rc} \cdot l_r}{r_x} \cdot \frac{1}{\pi} \cdot \sqrt{\frac{S_y}{E}}$

$\lambda_c = 1.06$ 2nd Equa. Applies

$$\lambda_p := \frac{K_{rp} \cdot l_r}{r_x} \cdot \frac{1}{\pi} \cdot \sqrt{\frac{S_y}{E}}$$

$\lambda_p = 0.404$ 1st Equa. Applies

$P_y := S_y \cdot A_r$

$P_y = 5.72 \cdot 10^4 \cdot lb$

$$P_c := \frac{2}{3} \cdot \left(1 - \frac{\lambda_c^2}{4}\right) \cdot P_y$$

$P_c = 2.741 \cdot 10^4 \cdot lb$ Rod Capacity (Cantilevered)

$$P_p := \frac{1 - \frac{(\lambda_p)^2}{4}}{1.11 + 0.50\lambda_p + \left(0.17\lambda_p^2 - 0.28\lambda_p^3\right)} \cdot P_y$$

$P_p = 4.152 \cdot 10^4 \cdot lb$ Rod Capacity (Pinned)

For six Rods,

$6 \cdot P_c = 1.645 \cdot 10^5 \cdot lb$

Total Rod Capacity per ASME Appendix F, Linear Support (Cantilevered)

$6 \cdot P_p = 2.491 \cdot 10^5 \cdot lb$ Pinned Rod Capacity

$W_b = 2300 \cdot lb$ Mark-IA Loaded Basket Weight (Conservative), Bottom Basket Carries 5 Baskets

$\frac{6 \cdot P_c}{35 \cdot W_b \cdot 5} = 0.409$ Support Rod Code Capacity (Cantilevered) carries 40.9% of 35g Drop Load

$\frac{6 \cdot P_p}{35 \cdot W_b \cdot 5} = 0.619$ Support Rod Code Capacity (Pinned) carries 61.9% of 35g Drop Load

Thus, using the ASME Code Appendix F allowables, the support rods Code carry 40.9% (cantilevered) to 61.9% of the total 35g drop loading. Based upon the Section 8.5 post-buckling calculations, there is adequate friction to provide lateral support at the top of the rods. However, conservatively using the cantilevered capacity, the support rod/center pipe combined capacity (see Section 8.5) is 40.9% + 67.3% = 108.2%, which demonstrates that the support rod capacity, when combined with the center pipe capacity is sufficient to carry the 35g drop loading. The resulting maximum stress ratio for the center pipe/support rod combined capacity is therefore:

$$\text{Ratio} = \frac{35 \cdot W_b \cdot 5}{6 \cdot P_c + P}$$

$$\text{Ratio} = 0.924$$

Since this stress ratio is high, potential unconservatisms in the calculated support rod capacity is an issue. The most significant potential unconservatism is the effect of load eccentricities. Ignoring load eccentricities is judged to be acceptable for the following reasons:

(1) The basket interface geometry results in significant "self correcting" of load eccentricities, as shown in Figure 2. That is, the rotation of the top of the support rod, resulting from an eccentric load, will move the load center toward the high point of the support rod and reduce the eccentricity.

(2) A 0.25-inch load eccentricity was considered in the Section 8.5 non-linear instability analysis and the resulting support rod capacity exceeded the calculated code capacity.

(3) As mentioned in the last paragraph of Section 8.5, the 0.25-inch chamfer on the bottom plate (see Figure 2) biases the eccentricity towards the center of the basket, resulting in

a preferential buckling direction toward the I.D. of the MCO shell. The MCO shell constraint results in a higher buckling failure mode and a higher support rod capacity.

(4) The non-linear/large deflection buckling analysis, discussed in Section 8.5, included a sensitivity study on the effect of friction on the buckling capacity of the support rods. A friction coefficient of 0.1 was found to be adequate to prevent lateral movement of the top of the rods. Accounting for lateral constraint at the top of the rods significantly increases the margin.

(5) Paragraph F-1322.3 (c) permits an adjustment of the stress-strain properties to account for strain rate effects. The increase in the yield strength for the drop accident load cases was conservatively ignored.

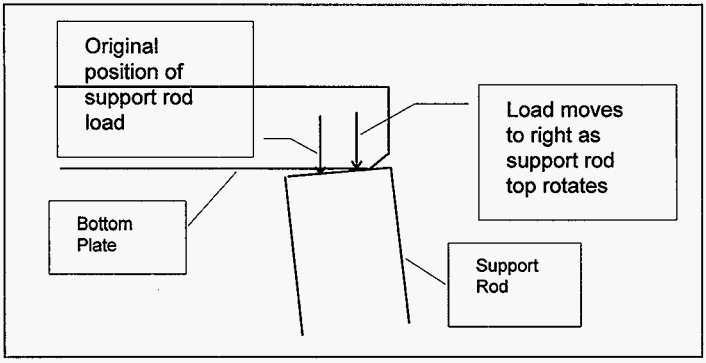

Figure 2. Illustration of Support Rod Load Eccentricity.

8.3 Bottom Plate

The Mark IA bottom plate was evaluated for normal operation and drop accident conditions. As indicated in the following subsection, the bottom plate design is controlled by the vertical drop load event.

8.3.1 Discussion of Bottom Plate Load Conditions

As indicated in Appendix A of the Performance Specification (Reference 1), a loaded MCO consists of six Mark IA baskets. The basket bottom plate stresses would be relatively low if the basket support rods are all alligned. However, since the baskets are not indexed to assure support rod allignment, rotational offsets are expected. The maximum bottom plate bending occurs when the support rods are midway between the above basket rods (30° offset). The critical bottom plate is the next-to-the-bottom basket with the bottom basket rotated 30° from the basket above. For this condition, the critical bottom plate rods react the loading from the four top baskets. This support rod offset produces significant bending stresses in the bottom plate, as demonstrated below.

The bounding drop loads for the bottom plate are a vertical drop of 35 g's and a horizontal drop of 101 g's. As indicated below, the critical drop for the bottom plate is the 35g vertical drop, except for the plate-to-pipe weld, where the horizontal drop is critical. Since the drop load stresses are much greater than the normal operation stresses within the MCO, the drop load condition controls the bottom plate design. However, since the boundary conditions and acceptance criteria of the single basket lift condition are much different than for the drop conditions within the MCO, the lifting condition is also addressed to confirm adequacy for this load condition.

8.3.2 ANSYS Models

Three ANSYS models were developed for evaluating the Mark IA Basket bottom plates. The first model generated was a sector model complete with holes, as shown in Figure 3. The mesh refinement necessary to properly define the holes resulted in a relatively large number of elements which ran relatively slow. Therefore, a second model without holes was developed, as shown in Figure 4. The majority of the bottom plate evaluations were run using the second model. The first model was used as a final confirmation using the final bottom plate design parameters (plate thickness, hole size/pattern, etc). Note that in both models, shell elements (SHELL43 and SHELL63) were used to model the center pipe and bottom plate, while solid elements (SOLID45) were used to model the support rod. Also note that both models were limited to 60° sectors to take advantage of the 60° symmetry (support rods every 60° and a 30° repeating hole pattern).

Symmetry boundary conditions (no rotation about a radius line nor no displacement in the tangential direction) were used at the zero and 60 degree edges of the models. For the stacking load condition within the MCO, it was assumed that the supporting basket below was rotated 30°, resulting in the support rods beneath being centered on the edges of the model. The precise bottom plate to support rod contact locations were not known. To

address this contact issue, gap elements were placed at the bottom plate/support rod interface.

A 180° degree symmetry model, shown in Figure 1, was developed for the horizontal drop evaluation. The primary purpose of this model is to demonstrate conformance to the two-inch distortion limit on the center pipe (Section 4.9.3 of the Reference 1 Performance Specification). The bottom plate and center pipe were modeled using ANSYS SHELL43 elements. The support rods are modeled with beam elements (BEAM4). Note that beam elements were also used at the support rod/bottom plate connection locations to spread the support rod moments over a reasonable area. Although the support rods structural adequacy is not an issue for the horizontal drop, the support rods were modeled to introduce the support rod inertia loads (moments) to the bottom plate. Gap elements (CONTAC52) were used at the drop-side interface with the MCO in order to achieve a reasonable interface load distribution. Since the horizontal drop can be preceded by a vertical drop, rigid links (BEAM4) were used to account for a potential axial reaction offset due to plastic distortion in the bottom plate occurring during the vertical drop. An offset equal to half of the plate thickness (1/2-inch) was used, as justified in Section 8.3.

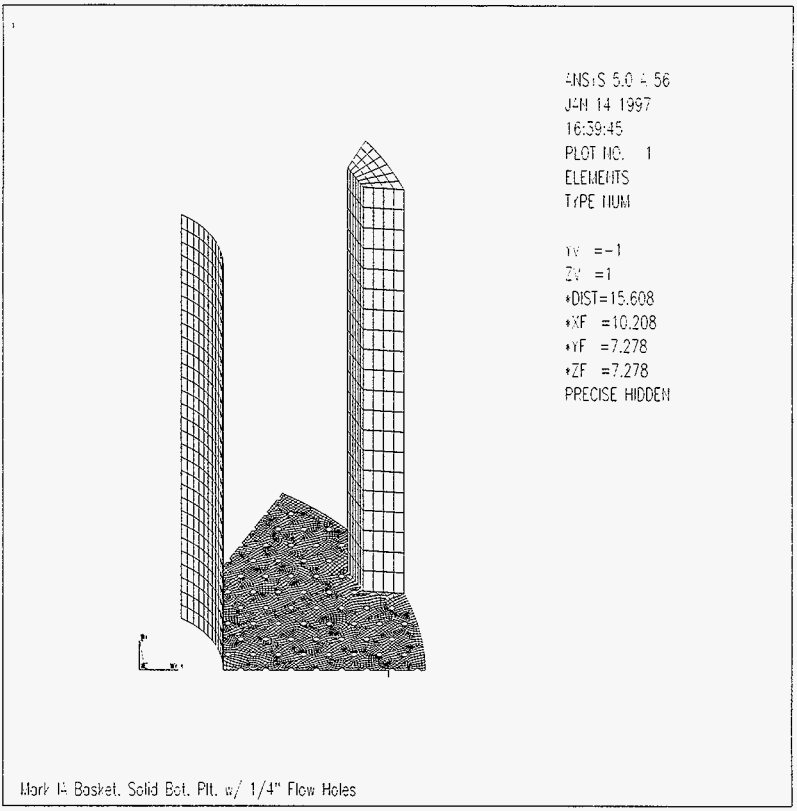

Figure 3. 60 Degree Sector Model of Basket with Holes.

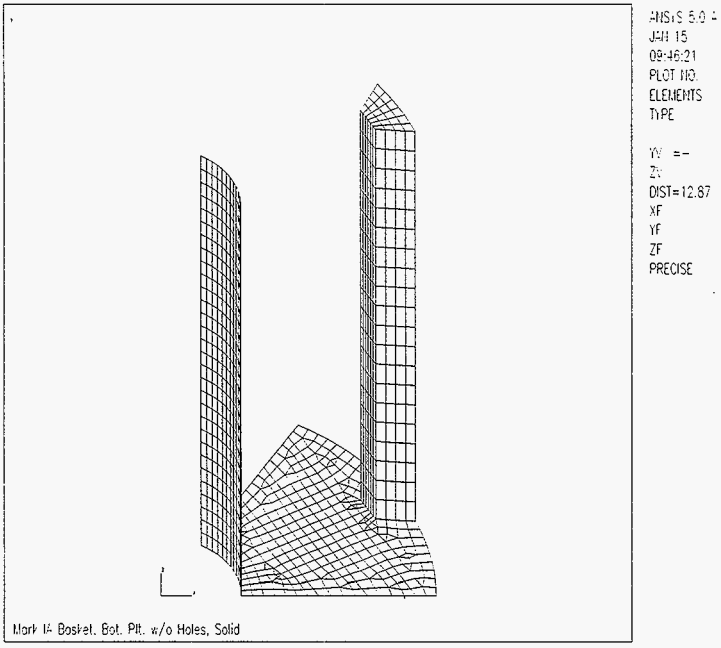

Figure 4. 60 Degree Sector ANSYS Model of Basket Without Holes.

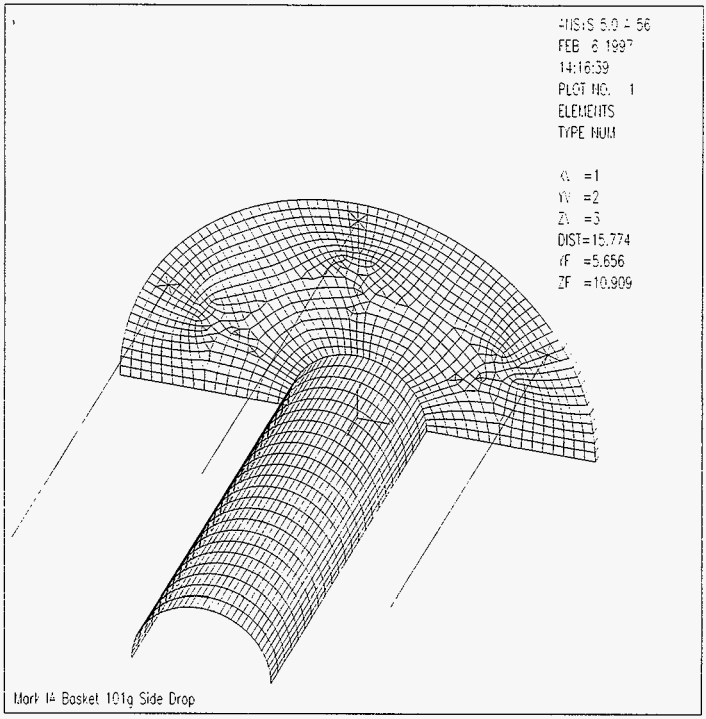

Figure 5. 180 Degree ANSYS Model of Basket Used for Horizontal Drop Analyses.

8.3.3 Vertical Drop Load Condition Evaluation

Using the Figure 4 no-hole model, an initial estimate of the 35g vertical drop stresses are generated. The loading/boundary conditions corresponded to a next-to-the-bottom basket, with four Mark IA baskets above. Prior to the vertical drop analysis, a run is made to estimate the fuel load distribution between the center pipe and support rods by applying a uniform pressure to the bottom plate to simulate the fuel inertia loading which was reacted

through the center pipe and support rod. As discussed in Section 8.5, for an elastically loaded "perfect fit", 58% of the fuel loading is reacted through the support rods and 42% of the fuel loading is reacted through the center pipe. This support rod/center pipe load distribution provides a reasonable, and likely conservative, estimate of the support rod loading in the elastic/plastic vertical drop analysis described below. See Section 8.5 for a discussion of this load distribution.

From Appendix A of the Performance Specification (Reference 1), the loaded Mark IA basket weight is 2153 lb (basket weight = 247 lb, fuel weight = 1906 lb). Subsequent basket design changes have increased the basket weight to approximately 400 lb. For analysis purposes, a total loaded basket weight of 2350 lb was used. Using this conservative weight estimate, the 35g, four basket loading is

$$35(2350)(4) = 329{,}000 \text{ lbs.}$$

For an elastic/plastic drop analysis, it is reasonable to assume that the support rods equally share the support rod portion (58%) of the 329,000 drop load, resulting in a support rod loading for the next-to-the-bottom basket of

$$F_r = 0.58(329{,}000)/6 = 31{,}803 \text{ lbs.}$$

The center pipe load estimate for a 60° sector is

$$F_{cp} = 0.42(329{,}000)/6 = 23{,}030 \text{ lbs.}$$

These loads were imposed on the Figure 4 model in the form of pressures on top of the support rod and center pipe (11,066 psi and 8835 psi, respectively). Vertical constraints were introduced at the bottom of the center pipe and at the interface with the bottom basket support rods.

Fuel inertia loading on the bottom plate was input as an equivalent pressure, using 39.7 lb/fuel rod per Reference 1, Appendix A:

$$F_f = 48(39.7)(35) = 66{,}696 \text{ lb}$$

$$A_p = [(22.625)^2 - (6.625)^2](\pi/4) = 367.57 \text{ in}^2$$

A_r = 2.874(6) = 17.24 in^2 (See Section 8.2)

Pres = $F_f/(A_p - A_r)$ = 190.38 psi (Equivalent fuel pressure, solid plate).

Justification for using the Figure 4 "no-hole model" for the elastic/plastic analysis was obtained by performing elastic drop analyses on both the Figure 3 and Figure 4 models. The elastic analysis results are summarized in the Figure 6 and Figure 7 stress intensity contour plots. Note that with the exception of the very local stresses immediately adjacent to the flow holes, the results are very similar. Also note that the peak stress intensity for both models occurs near the support rod constraints and are very close to the same magnitude (65.2 ksi and 65.5 ksi). Using the results for the more detailed model (Figure 5), the maximum plate bending stress of 65.5 ksi compares to an ASME III-NG Level D allowable stress intensity of 57.2 ksi (1.5x2.4 Sm @ 200°C), indicating a small overstress for the elastic analysis limits. This elastic overstress was resolved by performing the elastic/plastic analysis described below.

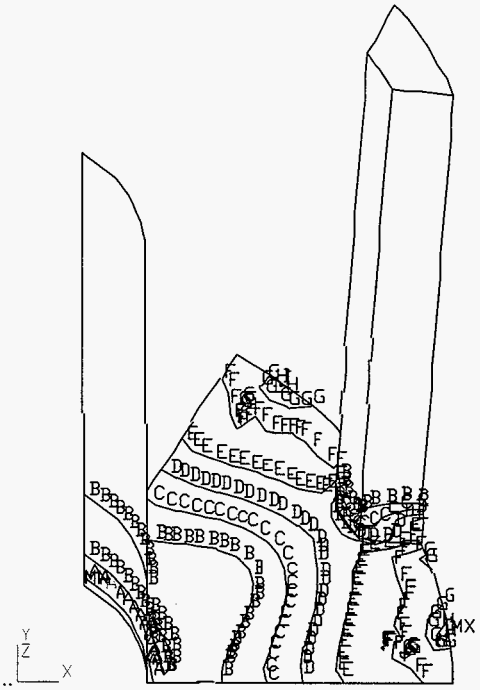

Figure 6. Elastic Stress Intensity Contours, 35g Vertical Drop, No-Hole Model.

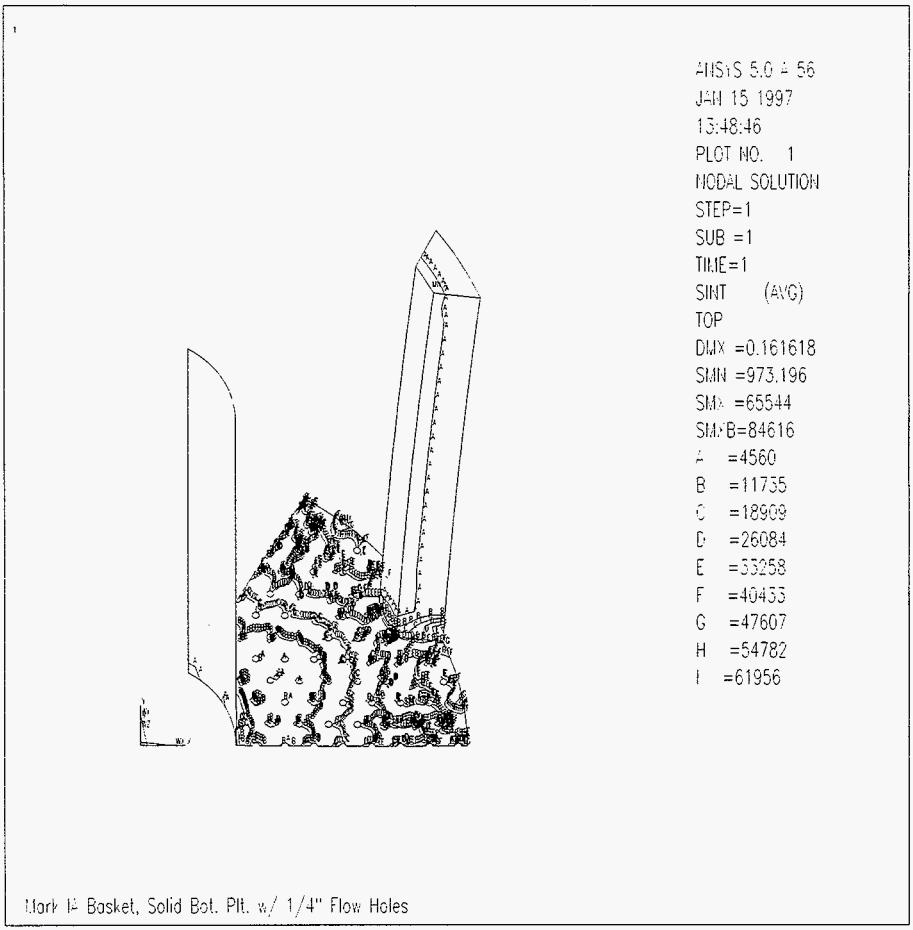

Figure 7. Elastic Stress Intensity Contours, 35g Drop Loading, Detailed Hole Model.

Using the Figure 4 model, an elastic/plastic analysis of the 35g drop loading was performed, assuming bilinear plasticity (ANSYS input/output files: pltnhp.inp and pltnhp.out). The method for developing the bilinear stress-strain curve was obtained from Reference 12, adapted from 304 SS data. Reference 12 indicates that the strain hardening coefficient is relatively independent of temperature. A value of 0.16×10^6 psi was obtained from Table B.1 of Reference 12, for a conservative maximum strain of 5%. Since 304 SS and 304L SS are nearly identical materials, it is reasonable to use the same strain hardening coefficient and the 17.8% yield strength increase. The ANSYS input and output files are contained in the attached disk (pltnhp.inp and pltnhp.out).

The vertical drop stress intensity contours are shown in Figure 8. A tabular summary of the membrane and membrane plus bending results are provided in Table 5. Note that all predicted stress intensities ratios are less than one, indicating that the results are within ASME Code allowables.

Table 5. Vertical Drop Stress Intensity Results Summary.

Component		Stress Category	Stress Intensities, ksi		Ratio
			Maximum	Allowable	
Bottom Plate	Middle	Pm	19.6	41.1	0.48
	Top	Pm + Pb	24.5	52.8	0.46
	Bottom	Pm + Pb	24.5	52.8	0.46
Center Pipe	Middle	Pm	14.7	41.1	0.36
	Top	Pm + Pb	18.8	52.8	0.36
	Bottom	Pm + Pb	22.5	52.8	0..43

The plastic strain contours are shown in Figure 9. Note that a maximum plastic strain of about 1% was predicted, which is well below the 5% maximum assumed for the strain hardening coefficent selection above. Also note that a maximum displacement of 0.068 in.

was predicted. This maximum displacement occurs in the vertical direction and occurs in the plate below the support rod. The bottom plate distortion is of interest because of the potential for a horizontal drop following a vertical drop. As indicated in Section 8.3.4, this maximum plate distortion was considered in the horizontal drop evaluation.

8.3.4 Horizontal Drop Analysis

Using the 180° model shown in Figure 5, an elastic/plastic analysis was performed for the 101g horizontal drop load condition. The plastic analysis option was selected for two reasons: (1) an initial elastic analysis predicted local stresses which exceeded the elastic allowables, (2) total transverse distortion (elastic plus plastic) predictions were needed to demonstrate conformance to the Reference 1, Section 4.19.3, nuclear criticality safety requirement that the "void space centerline shall not deviate more than two inches from the MCO centerline".

As indicated by the small elements on the right side (impact side) of the Figure 5 model, line elements (BEAM4) were used to account for the potential offset associated with bottom plate plastic distortions occurring during a preceding vertical drop. Note from Figure 10, that offset from the bottom plate centerline can also be affected by the bottom plate edge contact. Although the vertical drop distortion was less than 0.1 inch, an offset of 0.5" was conservatively assumed. Although the actual offset would be limited to a small area (near a support rod), a uniform offset was conservatively assumed.

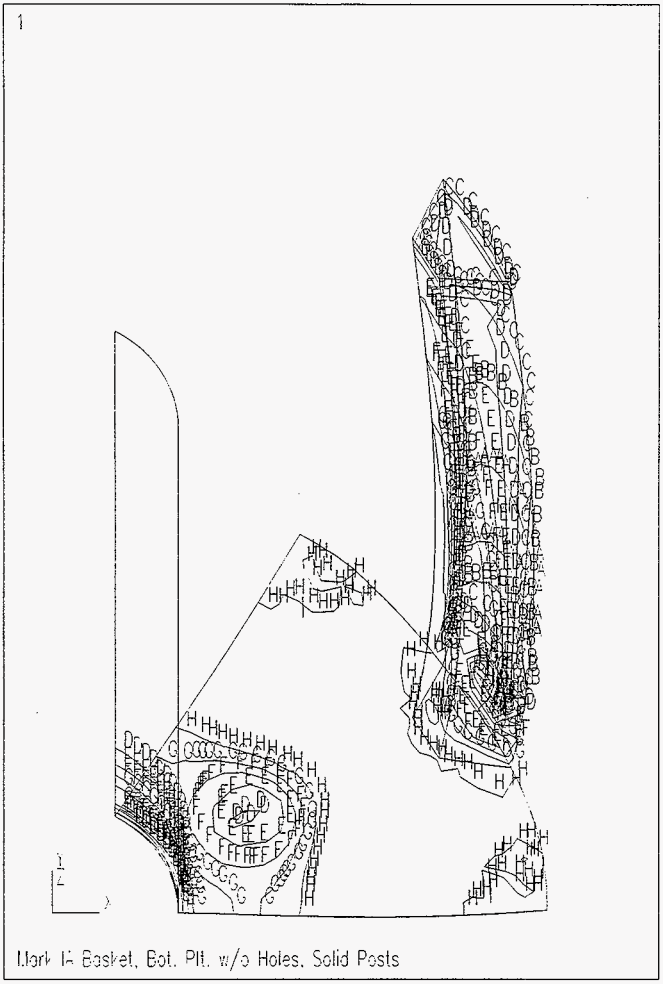

Figure 8. Elastic/Plastic Stress Intensity Contours, 35g Vertical Drop, No-Hole Model.

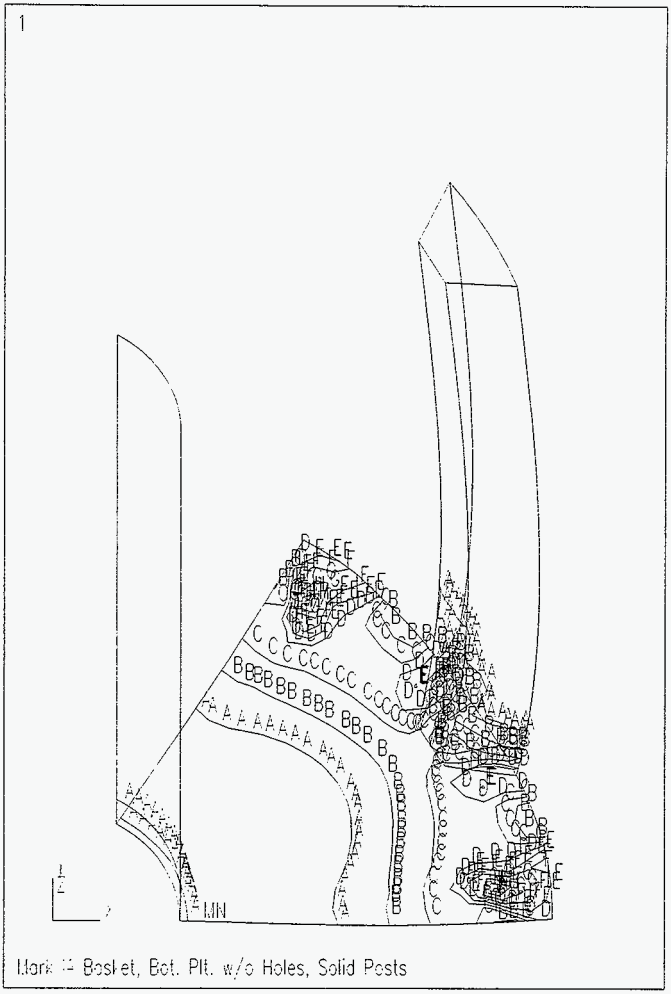

Figure 9. Plastic Strain Contours, 35g Vertical Drop, No-Hole Model.

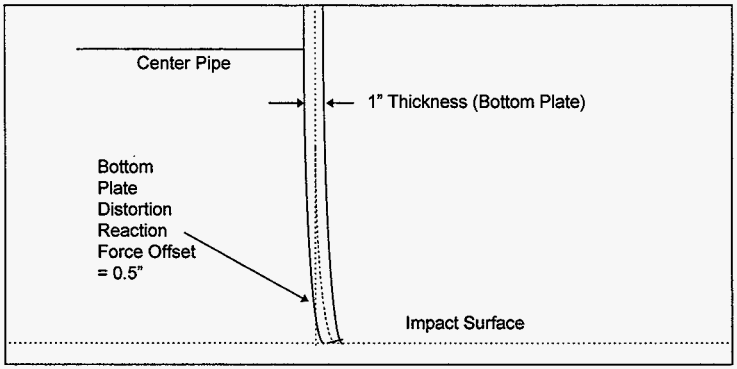

Figure 10. Bottom Plate Distortion Illustration for Horizontal Drop Modeling.

Gap elements (ANSYS CONTAC52) were used to account for the circumferentially varying gap between the outside of the bottom plate and the inside of the MCO (3/8" diameter difference). Assuming the same bilinear plasticity used for the vertical drop analysis above, the elastic/plastic response of the Figure 5 model was predicted. The potential for a basket instability (elastic/plastic buckling) was included in the ANSYS run by activating the large deflection/strain option (NLGEOM,ON command). The g loading was increased to 1.5 times the specified drop loading of 101 g's to assure that the ASME Level D buckling requirements are met (Para. F-1331.5(a), loading < 2/3 buckling capacity). An earlier elastic buckling analysis, with no bottom plate offset, indicated that the elastic buckling strength was in excess of 1000 g's (stress > yield), which indicates that the actual buckling failure mode is inelastic.

The nonlinear results for the horizontal drop evaluation are summarized in Figure 11 and Figure 12. Note, in Figure 11, that a maxium stress intensity of 30.0 ksi was predicted for the bottom side of the bottom plate. The corresponding maximums for the shell middle and top surfaces are 14.6 and 26.9 ksi, respectively. Since the maximum surface stress intensity is more than 50% higher than the mid-surface results, membrane plus bending stress intensity is the critical value for the horizontal drop. From Table 4, the allowable membrane plus bending stress intensity (plastic analysis) is 52.8 ksi, resulting in a ratio of

Ratio = 30.0/52.8 = 0.57.

Figure 12 provides an indication of the plastic instability response for a horizontal drop. As indicated, a g loading of 1.5 times the 101g drop loading (151.5 g's) does not result in an unstable response. Thus, the ASME Level D requirement (load < 2/3 buckling strength) is met.

A criticality control limit in Section 4.19.3 of the Reference 1 Performance Specification, specifies that the center pipe cannot deviate from the MCO centerline by more than 2.00 in. From Figure 11, a maximum horizontal drop displacement of 0.59 in. is indicated in the figure legend (101g loading). This maximum displacement occurs at the top of a support rod, which has no criticality concern. From Figure 11, the maximum displacement in the bottom plate is only 0.02 in. for a 101 g loading. Combining this value with the 3/16-in. radial displacement due to the basket O.D./MCO I.D. difference, results in a deviation of 0.21 in. The resulting allowable ratio is

Ratio = 0.21/2.00 = 0.11.

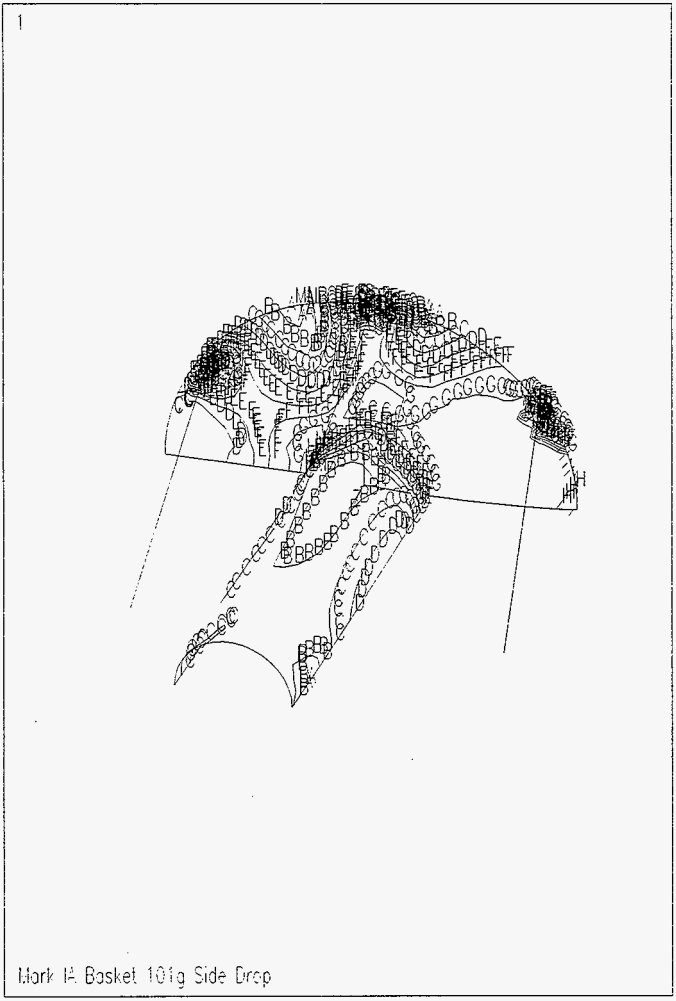

Figure 11. 101g Horizontal Drop Stress Intensity Contours, Inelastic Analysis.

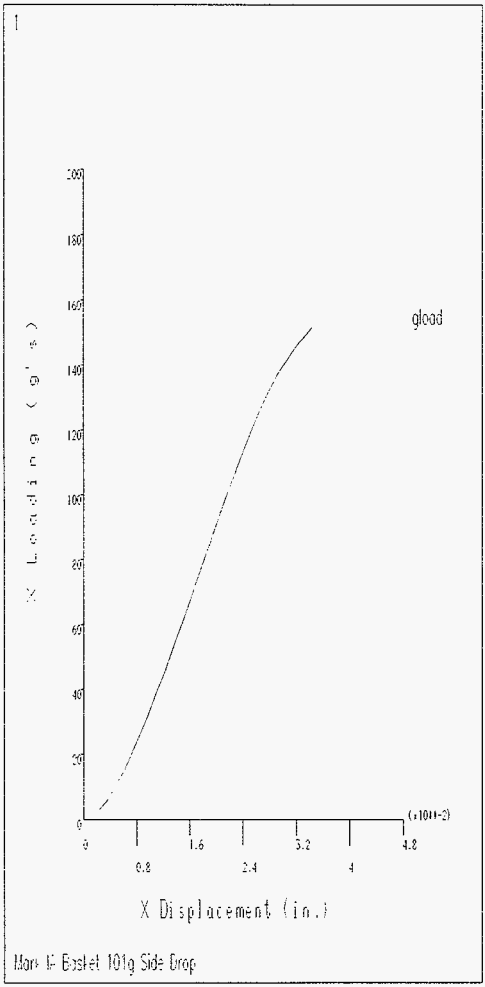

Figure 12. Horizontal Drop G Load Versus Max. Vertical Displacement, Inelastic Analysis.

8.4 Scrap Basket Shroud

The scrap basket shroud extends the full height of the basket and is used to contain the scrap pieces. The scrap pieces vary in size and shape, and the resulting pressure will vary significantly. A reasonable estimate of the scrap pressure can be obtained by considering wall pressures associated with wall pressures associated with angular rock (limestone, iron ore, etc). The scrap pressure during drop loading was not considered, since it is assumed that the drop loading scrap pressure is carried by the MCO wall (see Appendix 5). The following evaluation of the wall pressure and corresponding structural evaluation of the shroud was performed on Mathcad and inserted into the report.

Assume that the scrap weight is equal to 48 fuel assemblies @ 39.7 lb.

$W_s := 48 \cdot 39.7 \cdot lb$

$W_s = 1.906 \cdot 10^3 \cdot lb$

$h_s = 22.00 \cdot in$ Shroud Height

$d_s = 22.525 \cdot in$ Shroud Inside Radius

$t_s = 0.048 \cdot in$ Shroud Nominal Thickness

$V_s := \frac{\pi}{4} \cdot (d_s)^2 \cdot h_s$

$V_s = 8.767 \cdot 10^3 \cdot in^3$ Scrap Volume

$\delta_s = \frac{W_s}{V_s}$

$\delta_s = 0.217 \cdot \frac{lb}{in^3}$ Scrap Weight Density

$S_y := 21040 \cdot \frac{lb}{in^2}$ 304L yield str. @ max. lifting temp. of 100 degC

Assume a reasonable equivalent fluid pressure coefficient:

$\phi := 33 \cdot deg$ Minimum of iron ore/coal/lime angle of repose with 2 degree uncertainty, Bowles (Ref. 11), Table 11-8

$K_a := \frac{1 - \sqrt{1 - \cos(\phi)^2}}{1 + \sqrt{1 - \cos(\phi)^2}}$ Bowles, Eq. 11-7a, Rankine pressure coeficient

$K_a = 0.295$ Use 0.3 as reasonable estimate of pressure coefficient

$K_a = 0.3$

$p_{base} := K_a \cdot \delta_s \cdot h_s$

$p_{base} = 1.435 \cdot \frac{lb}{in^2}$

Check maximum membrane pressure stress in the sheet metal shroud (lifting load condition):

$P_m := p_{base} \cdot \frac{d_s}{2 \cdot t_s}$

$P_m = 336.61 \cdot \frac{lb}{in^2}$

$Ratio := \frac{P_m}{\left(\frac{S_y}{3}\right)}$

$Ratio = 0.048$

Check Shroud Welds (size corresponds to shroud thickness of 0.048"):

1) Vertical Seam Weld (2" long welds @ 4" centers, intermittent)

$n = 0.3$ Weld quality factor, Table NG-3352-1, conservatively use "intermittent fillet or plug" weld with surface visual exam

$$\text{Ratio} = \frac{2 \cdot P_m}{n \cdot \left(\frac{S_y}{3}\right)}$$

$\text{Ratio} = 0.32$ Vertical Seam Weld O.K.

2) Shroud-to-Bottom-Plate Weld (2" @ 4" centers)

The shroud-to-bottom plate welds have no structural function because the pressure induced by the scrap is carried by the hoop strength of the shroud. Since there is no significant vertical uplift load on the shroud, the weld has no significant structural function and was not evaluated.

As indicated, the shroud and shroud welds are adequate. Although there are significant uncertainties in the load magnitude (pressure coefficient), the design margins are relatively large and no further refinement is warranted.

8.5 Load Distribution and Basket Interface Considerations

When the baskets are stacked inside the MCO, the center pipe and support rod load distribution is very sensitive to the interface geometry. Reasonable fabrication tolerances will result in an imperfect fit, which will likely result in a three-point contact at the basket interface (three rods or two rods and the center pipe). There is also the possibility that the center pipe will carry the entire load.

Even for the case of a perfect fit, the stack loading will not be evenly shared between the center pipe and rods. Using the Figure 3 ANSYS model, the "perfect fit" load distribution was estimated by applying the 35g fuel pressure to the bottom plate, and obtaining the reactions at the support rod and center pipe (ANSYS files: pltnhld.inp and pltnhld.out). From the ANSYS output, the support rod and center pipe reactions were 7226 lb and 5166 lb, respectively (12,392 lb total). The center pipe load ratio is 5166/12,392 = 0.42. However, for the reasonable fabrication tolerances discussed below, it is possible for the center pipe load ratio to range from zero to one, during normal stacking. As demonstrated below, for the drop condition, distortion/load redistribution will occur, and the 0.42 ratio can be used as a reasonable estimate of the center pipe load ratio.

In order to establish reasonable fabrication tolerances on the basket interface geometry, capacity force/deflection response predictions were made for the basket support rods. By knowing the force/deflection response, the effect of component length differences on the component load sharing can be evaluated. The capacity force/deflection response was obtained using the ANSYS plastic beam element (BEAM23), with large deflections/strain enabled. Buckling was initiated by assuming a 0.25-in. offset of the vertical load. This load offset assumption is reasonable for the Mark 1A support rods due to a 1/4-in. chamfer on the outside of the bottom of the basket, resulting in the basket load being biased to the inside of the rod.

The model consisted of two support rods, each having 20 BEAM23 elements. One of the rods was 0.030-in. shorter than the other. By using gap/friction elements (CONTAC12) between the loaded node and the top of each support rod, the shorter rod would not begin to be loaded until the longer rod had experienced a 0.030-in. vertical deformation. To enhance solution stability, the loading was applied as a vertical deformation, with a total deformation of 0.100 in. By multiplying the rod responses by a factor of 3.0, the conservative case of three equal-length rods with three 0.030-in shorter equal-length rods could be evaluated (no support from the center pipe). The purpose of the evaluation was to investigate the load capacity of the rods for relatively large vertical deformations.

The support rod deformation predictions for a vertical deformation load of 0.100-in are shown in Figure 13 (ANSYS input/output files: Rodb2.inp/Rodb2.out) Note that a maximum horizontal deformation of 0.339-in. was predicted for the longer rod. The support rod force/deflection prediction is shown in Figure 14 (3fy1 curve). Note that very little support rod capacity losses are predicted for a vertical deformation of 0.100-in. Also note that the six-rod capacity is insufficient to carry the bottom basket 35g loading. The top horizontal line shows the ASME Code Level D combined capacity of the center pipe and six support rods. Thus, this analysis indicates that relatively loose fabrication tolerances are possible. However, to account for analysis uncertainties, it is recommended that a maximum range of 0.030-in. be imposed on support rod and support rod/center pipe fabrication length differences.

Another support rod design issue is the need for horizontal constraints at the top of the support rods. In the analysis described above, a friction coefficient of 0.10 was assumed, with no slippage predicted. From Table 1 of Section 3 of Mark's Handbook, the lowest steel-to-steel dynamic friction coefficient shown is 0.42, indicating that friction is adequate to constrain the top of the support rods.

As mentioned above, the basket interface results in a support rod load offset which will bias the buckling to be radially outward in direction. This "preferential buckling" towards the inside wall of the MCO would enhance the support rod buckling strength. That is, as the support rods bows outward, the MCO will prevent collapse until a higher buckling mode is achieved. By using gap elements to represent the space between the support rod and the inside of the MCO, this buckling strength enhancement was evaluated with an ANSYS run. A buckling strength increase of about 50% was predicted. This buckling strength enhancement is supplemental in nature and is not needed for design verification. Therefore, the ANSYS input/output files are not included with this report.

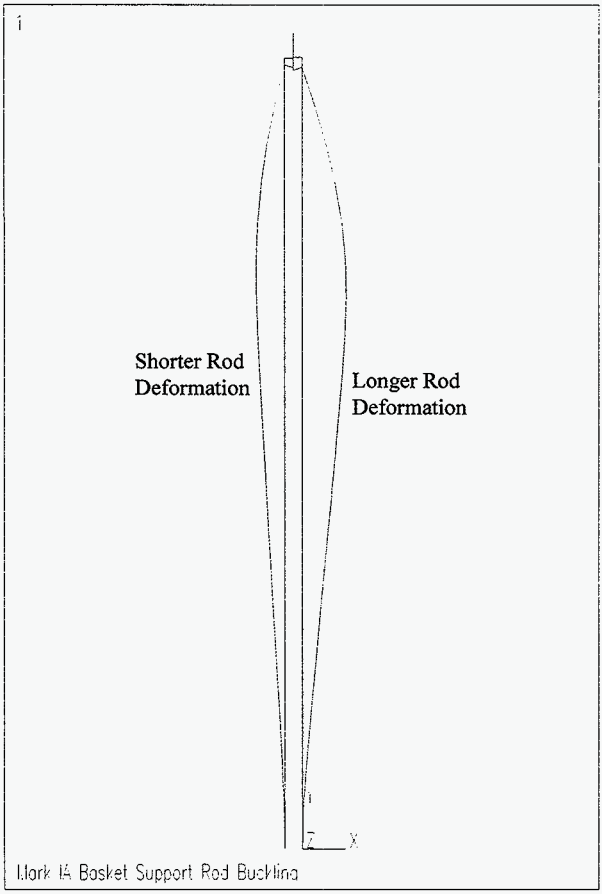

Figure 13. Support Rod Deformed Shape Predictions, 0.030" Vertical Deflection.

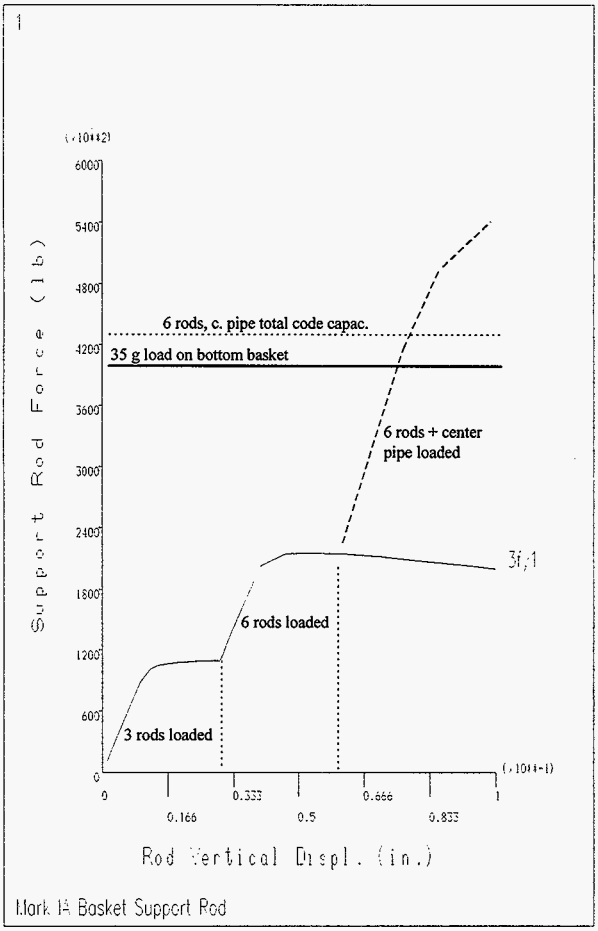

Figure 14. Deformation Response of Mark 1A Basket Support Rods.

8.6 Component Stress Results Summary

From the calculations above, a summary of the component stress analysis results was compiled into Table 6. Note that the predicted maximums are below allowables for all components and conditions. As indicated in Section 6.3, for the maximum drop temperatures from the current revision of the Reference 1 Performance Specification, the drop condition allowable stresses are conservative (approximately 5 to 14%).

Table 6. Summary of Mark 1A Storage Basket Stress Results

Component	Critical Load Condition	Stress Category	Predicted Maximum	Allowable	Ratio
Center Pipe	35g Vertical Drop	Buckling	14,111 psi[1]	14,699 psi	0.92[1]
Center Pipe Criticality Control	Sequential 35g Vertical & 101g Horiz. Drops	Plastic Distortion & Potential Instability	0.28 in. radial displacement	2.00 in.	0.14
C. Pipe/B. Plate Weld	101g Horiz. Drop	Pm	9545 psi	13,400 psi	0.71
Center Coupling	101g Horiz. Drop	Shear	6640 psi	24,696 psi	0.27
Center Coupling Pins	Lifting	Shear	2350 lb	10,000 lb	0.24
Center Bushing Pin	Lifting	Shear	4.04	2500	0.002
Support Rods	35g Vertical Drop	Buckling	11,110 psi[1]	11,573 psi	0.92[1]
Bottom Plate	35g Vertical Drop	Pm	19,600	41,100	0.48

[1] Based upon combined capacity of center pipe and support rods. See conclusion to Section 8.2.

9. BASKET/MCO INTERFACE COMPONENTS

An important issue in the Section 8.3.4 horizontal drop evaluation is the assumption that the top end of each Mark 1A basket (center post) remains inside, i.e. overlaps, the mating component during the drop. This assumption is vital to the horizontal drop calculations because the finite element analysis assumed a transverse support for the top end of the center pipe. Also, Section 4.19.3 of the Reference 1 Performance Specification (criticality control) requires that the center pipe cannot deviate by more than two inches from the MCO centerline. This section provides justification for the assumption that the Mark 1A baskets will not come apart at the interfaces.

The basket/MCO interfaces were designed to assure that, during normal operations, the center coupling maintains at least a one-inch overlap with the shield plug assembly. During a vertical drop, if the "MCO Basket Support Plates" (Drawing No. H-2-828053) collapse, the center coupling overlap may be lost. Therefore, the basket support plates were evaluated to assure that the ASME Code Level D axial compression limits are met for a vertical drop. The Mathcad evaluation follows below:

MATHCAD SUPPORT PLATES CALCULATIONS

Support Plate Dimensions (six radial spokes @ 60 deg. intervals):

$t_p := 0.5 \cdot in$ Support Plate Width

$l_p := 9.71 \cdot in$ Support Plate Length

$h_p := 1.49 \cdot in$ Support Plate Height

Per inch length of plate:

$$I := \frac{1 \cdot in \cdot (t_p)^3}{12}$$

$$I = 0.01 \cdot in^4$$

$$r := \sqrt{\frac{I}{1 \cdot in \cdot t_p}}$$

$$r = 0.144 \cdot in$$

$K := 2.1$ Effective length, fixed/free (Ref.: AISC)

$S_y := 19760 \cdot \frac{lb}{in^2}$ 304L yield stress @ max. drop temp. of 132 degC

$E := 27.2 \cdot 10^6 \cdot \frac{lb}{in^2}$ 304L Young's Modulus @ max. drop temp.

ASME F-1334.3 Axial Compression Evaluation:

$$\lambda := \left(\frac{K \cdot h_p}{r}\right) \cdot \frac{1}{\pi} \cdot \sqrt{\frac{S_y}{E}}$$

$\lambda = 0.186$ $0 < \lambda < 1$, 1st Eq. Applies

$$\sigma_{allow} := S_y \cdot \frac{1 - \frac{\lambda^2}{4}}{1.11 + 0.50 \cdot \lambda + 0.17 \cdot \lambda^2 - 0.28 \cdot \lambda^3}$$

$\sigma_{allow} = 1.623 \cdot 10^4 \cdot \frac{lb}{in^2}$

The maximum vertical g level for a sequential drop is 32.9 g's:

$W_b := 2350 \cdot lb$ Upper Bound Basket Weight

$$\sigma := \frac{6 \cdot W_b \cdot 27}{6 \cdot l_p \cdot t_p}$$

$\sigma = 1.592 \cdot 10^4 \cdot \frac{lb}{in^2}$

$$\text{Ratio} := \frac{\sigma}{\sigma_{allow}}$$

$\text{Ratio} = 0.981$ Basket Support Plate OK

Since the safety margin is small, it is noted that the results are conservative in that no credit is taken for either the vertical weld on the inside end of the plate or the lateral resistance for friction.

Check Support Plate Welds:

$$f_p := \sigma \cdot t_p$$

$f_p = 7.685 \cdot 10^3 \cdot \frac{lb}{in}$ Support plate drop loading/inch

Assume a maximum load offset = 1/2 of plate thickness:

$$M_p := f_p \cdot \frac{t_p}{2}$$

$M_p = 1.921 \cdot 10^3 \cdot lb \frac{in}{in}$

The 3/8" weld stress in the throat is

$$\sigma_w := \frac{M_p}{t_p \cdot \frac{\sqrt{2}}{2} \cdot \frac{3}{8} \cdot in}$$

$\sigma_w = 1.449 \cdot 10^4 \cdot \frac{lb}{in^2}$

From Section 6.4, the allowable double fillet weld drop accident stress is 15.3 ksi, resulting in the following stress ratio:

$$\text{Ratio} = \frac{\sigma_w}{15300 \cdot \frac{lb}{in^2}}$$

$$\text{Ratio} = 0.947$$

Thus, the basket support plates and attachment welds meet the ASME Level D compression load requirements, and the overlapping (telescoping) of the baskets is not jeopardized.

At the top end of the basket stack, the basket interfaces with the bottom of the shield plug assembly (specifically, the basket stabilizer, shield ring, and shield plate, part nos. 21, 15, and 14 of Drawing H-2-828041). For a top end drop, the basket loading would be reacted by the one-inch thick shield ring (area = 67.5 in^2) and the basket stabilizer. The shield ring area alone is more than double the bottom basket interface support plate area. Thus, the top axial support is adequate by comparison to the bottom basket interface.

For a horizontal drop, the top basket relies upon the shield plate for transverse support. For normal conditions, the shield plate position is maintained through a weld connection to the shield ring which in turn is welded to the shield plug. If either or both of these welds should fail during a horizontal drop, the shield plate would be captured between the top basket and shield plug and would continue to support the top end of the basket. Therefore, the maximum center pipe movement would be the 0.25-inch difference between the inside radius of the MCO and the outside radius of the shield ring, which is well below the two-inch Performance Specification limit (Reference 1, Section 4.19.3).

APPENDIX A

COMPUTER RUN OUTPUT SHEETS

AND

INPUT FILE LISTINGS

COMPUTER RUN COVER SHEET

Project Number:	KH-8009-8
Computer Code:	ANSYS®-PC
Software Version:	5.0A
Computer System:	MS-DOS, Pentium® Processor
Computer Run File Number:	KH-8009-8-05
Unique Computer Run File Name:	Plth.inp
Run Description:	Elastic Drop Analysis of the Mark IA Storage Basket, Holes in Bottom Plate
Creation Date/Time:	15 January 1997/1:09:36pm

Bob V. Winkel 4/18/97

Prepared By: Bob V. Winkel Date

Joe Nichols 4/17/97

Checked By: Joe Nichols Date

LISTING OF PLTH.INP FILE

```
/batch,list
/filenam,plth
/prep7
/title, Mark IA Basket, Solid Bot. Plt. w/ 1/4" Flow Holes

SIZE = 0.15        ! element size
THICK1= 1.000      ! plate thickness
THICK2= .864       ! center pipe thickness
pressure = -201.14  ! uniform pressure load (35g fuel press.)
OR = 22.625/2      ! plate outside radius
IR = 6.625/2       ! plate inside radius
RR = 21.15/2       ! support rod loca. radius
HI = 22.318        ! height of center pipe/rods
rhole = 0.25/2     ! radius of flow hole

et,1,shell63
et,2,shell63
et,3,solid45
et,4,contac52

r,1,THICK1
r,2,THICK2
r,4,1e6,0,2

dens,1,.2854
ex,1,26.5E+06
nuxy,1,.3
dens,2,0.
ex,2,30.e6
nuxy,2,.3

/com define bottom plate
csys,1      ! global cylindrical

k,15,0,0
k,1,IR,0
k,2,6.5,0
k,3,8.5,0
k,4,10.5,0
k,5,OR,0
k,6,OR,30
k,7,9.868,30
k,8,9.093,30
k,9,7.361,30
k,10,5.629,30
k,11,IR,30
k,12,OR,22.201
k,13,9.887,26.463

l,1,2        ! line 1
l,2,3        ! line 2
l,3,4        ! line 3
l,4,5        ! line 4
```

```
larc,5,12,15,OR    ! line 5
l,6,7
lesize,6,,,4
l,7,8
l,8,9
l,9,10
l,10,11
larc,1,11,15,IR    ! line 11
lesize,11,,5       ! 5 degree segments for inside arc
csys,0
l,2,10             ! line 12
l,3,9
l,4,8              ! line 14
l,7,13
lesize,15,,,3
l,13,12            ! line 16
lesize,16,,,4
csys,1
l,12,6             ! line 17
lesize,17,,,3

/com bottom plate areas
al,1,12,10,11   ! A1
al,2,13,9,12
al,3,14,8,13
al,4,5,16,15,7,14   ! A4

/com define center pipe
k,20,0,0,HI
k,21,IR,0, HI
k,25,IR,30,HI
larc,25,21,20,IR   ! line 18
lesize,18,,5       ! 5 degree segments for inside arc
l,1,21             ! vertical line 19 at 0 degrees
l,11,25            ! vertical line 20 at 30 degrees
/com area 5 = center pipe
al,18,19,20,11

/com create sup. rod area & ext. into solid eles.
al,6,15,16,17   ! A6

/com define holes in bottom plate
boptn,yes       ! to save holes
*afun,deg
*do,i,4,11      ! Row 1 holes, areas 7 - 14
xh = i
yh = 0
wplane,,xh,yh
pcirc,rhole
*enddo
*do,i,4,11      ! Row 2 holes, areas 15 - 22
xh = i - 0.5
yh = cos(30)
wplane,,xh,yh
pcirc,rhole
*enddo
```

```
*do,i,4,10     ! Row 3 holes, areas 23 - 29
xh = i
yh = 2*cos(30)
wplane,,xh,yh
pcirc,rhole
*enddo
*do,i,5,11     ! Row 4 holes, areas 30 - 36
xh = i - .5
yh = 3*cos(30)
wplane,,xh,yh
pcirc,rhole
*enddo
*do,i,6,10     ! Row 5 holes, areas 37 - 41
xh = i
yh = 4*cos(30)
wplane,,xh,yh
pcirc,rhole
*enddo
*do,i,8,9      ! Row 6 holes, areas 42 - 43
xh = i - 0.5
yh = 5*cos(30)
wplane,,xh,yh
pcirc,rhole
*enddo
aplot,all

/com subtract holes from bottom plate
/com A1
asba, 1,7    ! A1 - A6 -> A44, etc
asba,44,8
asba,45,9
asba,46,15
asba,47,16
asba,48,17
asba,49,23
asba,50,24
asba,51,30   ! A52
/com A2
asba,2,10    ! A53
asba,53,11
asba,54,18
asba,55,19
asba,56,25
asba,57,26
asba,58,31
asba,59,32
asba,60,37   ! A61
/com A3
asba,3,12    ! A62
asba,62,13
asba,63,20
asba,64,21
asba,65,27
asba,66,28
asba,67,33
asba,68,34
```

```
asba,69,38
asba,70,39
asba,71,42  ! A72
/com A4
asba,4,14   ! A73
asba,73,22
asba,74,29
asba,75,35
asba,76,36
asba,77,40
asba,78,41
asba,79,43  ! A80

/com delete unused areas
adele,1,4
adele,7,51
adele,53,60
adele,62,71
adele,73,79

/com merge areas and mesh
nummerg,all
esize,SIZE
amesh,52,61,9  ! bottom plate
amesh,72,80,8
real,2
esize,.75
amesh,5
amesh,6    ! support rod area

/com repeat mesh to obtain 60 degree model & merge nodes
csys
clocal,11,,,,,30
arsym,y,all
/com extrude sup. rod
type,3
esize,,25
vext,2,6,4,,,HI
csys
nummrg,node

/com add gap elements at support rods beneath
n,11444,9.870,.613,-1
n,11995,11.199,1.602,-1
n,14514,5.466,8.241,-1
n,15064,6.987,8.897,-1
d,11444,all
d,11995,all
d,14514,all
d,15064,all
type,4
real,4
e,11444,1444
e,11995,1995
e,14514,4514
e,15064,5064
```

```
/com constrain edges of plate (60 deg. symm.)
nsel,s,loc,y,0
csys,1
nrotat,all
d,all,uy,,,,,rotx,rotz
nsel,all
nsel,s,loc,y,60
csys,1
nrotat,all
d,all,uy,,,,,rotx,rotz
nsel,all

/com axial constraint
nsel,s,loc,z,0
nsel,r,loc,x,IR
d,all,uz
nsel,all
!d,1444,uz    ! support from rods beneath
!d,1995,uz
!d,4514,uz
!d,5064,uz

/com fuel loading (pressure) & accel.
asel,s,loc,z,0
asel,u,area,,2,6,4
nsla,s,1
sf,all,pres,pressure
asel,all
nall
nsel,s,loc,z,HI
nsel,r,loc,x,10,15
sf,all,pres,8048
nall
nsel,s,loc,z,HI
nsel,r,loc,x,0,7
sf,all,pres,7600
nall
fini
save
/solu
acel,,,-35
solve
fini
```

COMPUTER RUN COVER SHEET

Project Number:	KH-8009-8
Computer Code:	ANSYS®-PC
Software Version:	5.0A
Computer System:	MS-DOS, Pentium® Processor
Computer Run File Number:	KH-8009-8-05
Unique Computer Run File Name:	Plth.out
Run Description:	Elastic Drop Analysis of the Mark IA Storage Basket, Holes in Bottom Plate
Run Date/Time:	15 January 1997/1:41:26pm

Bob V. Winkel 4/18/97

Prepared By: Bob V. Winkel Date

Joe Nichols 4/17/97

Checked By: Joe Nichols Date

COMPUTER RUN COVER SHEET

Project Number:	KH-8009-8
Computer Code:	ANSYS®-PC
Software Version:	5.0A
Computer System:	MS-DOS, Pentium® Processor
Computer Run File Number:	KH-8009-8-05
Unique Computer Run File Name:	Pltnhld.inp
Run Description:	Elastic Drop Analysis of the Mark IA Storage Basket, No Holes in Bottom Plate
Creation Date/Time:	3 February 1997/11:38:26am

Bob V. Winkel 4/18/97

Prepared By: Bob V. Winkel Date

Joe Nichols 4/17/97

Checked By: Joe Nichols Date

LISTING OF PLTNHLD.INP FILE

```
/batch,list
/filenam,pltnhld
/prep7
/title,Mark IA Basket w/o Flow Holes, Load Distr. Run

SIZE = 0.5          ! element size
THICK1= 1.000       ! plate thickness
THICK2= .718        ! center pipe thickness (Sch. 160)
pressure = -190.43  ! uniform fuel pressure loading (35 g's)
OR = 22.625/2       ! plate outside radius
IR = 6.625/2        ! plate inside radius
HI = 22.318         ! height of center pipe/rods

et,1,shell63
et,2,shell63
et,3,solid45
et,4,contac52

r,1,THICK1
r,2,THICK2
r,4,1e6,0,1.

dens,1,.2854
ex,1,26.5E+06
nuxy,1,.3

/com define bottom plate
csys,1      ! global cylindrical
k,15,0,0
k,1,IR,0
k,2,6.5,0
k,3,8.5,0
k,4,10.5,0
k,5,OR,0
k,6,OR,30
k,7,9.868,30
k,8,9.093,30
k,9,7.361,30
k,10,5.629,30
k,11,IR,30
k,12,OR,22.201
k,13,9.887,26.463

l,1,2           ! line 1
l,2,3           ! line 2
l,3,4           ! line 3
l,4,5           ! line 4
larc,5,12,15,OR   ! line 5
l,6,7
lesize,6,,,4
l,7,8
```

```
l,8,9
l,9,10
l,10,11
larc,1,11,15,IR   ! line 11
lesize,11,,,5      ! 5 degree segments for inside arc
csys,0
l,2,10          ! line 12
l,3,9
l,4,8           ! line 14
l,7,13
lesize,15,,,3
l,13,12         ! line 16
lesize,16,,,4
csys,1
l,12,6          ! line 17
lesize,17,,,3

/com bottom plate areas
al,1,12,10,11  ! A1
al,2,13,9,12
al,3,14,8,13
al,4,5,16,15,7,14  ! A4

/com define center pipe
k,20,0,0,HI
k,21,IR,0, HI
k,25,IR,30,HI
larc,25,21,20,IR  ! line 18
lesize,18,,,5      ! 5 degree segments for inside arc
l,1,21          ! vertical line 19 at 0 degrees
l,11,25          ! vertical line 20 at 30 degrees
/com area 5 = center pipe
al,18,19,20,11

/com create sup. rod area & ext. into solid eles.
al,6,15,16,17   ! A6

/com merge areas and mesh
nummerg,all
esize,SIZE
amesh,1,4   ! bottom plate
amesh,6    ! support rod area
real,2
esize,.75
amesh,5

/com repeat mesh to obtain 60 degree model & merge nodes
csys
clocal,11,,,,,30
arsym,y,all
csys

/com support rod
type,3
esize,,20
vext,6,12,6,,,HI
```

```
nummrg,node

/com constrain edges of plate (60 deg. symm.)
nsel,s,loc,y,0
csys,1
nrotat,all
d,all,uy,,,,,rotx,rotz
nsel,all
nsel,s,loc,y,60
csys,1
nrotat,all
d,all,uy,,,,,rotx,rotz
nsel,all

/com axial constraint @ center pipe & support rod
nsel,s,loc,z,HI
d,all,uz
nall

/com fuel loading (pressure) & acel
asel,s,loc,z,0
asel,u,area,,6,12,6
sfa,all,,pres,pressure
asel,all
acel,,,35
nall
fini

/solu
!outpr,basic,1
solve
fini

/post1
set,last
prrs
nsel,s,loc,x,0,4
prrs
nsel,s,loc,x,9,12
prrs
fini
/exit
```

COMPUTER RUN COVER SHEET

Project Number:	KH-8009-8
Computer Code:	ANSYS®-PC
Software Version:	5.0A
Computer System:	MS-DOS, Pentium® Processor
Computer Run File Number:	KH-8009-8-05
Unique Computer Run File Name:	Pltnhld.out
Run Description:	Elastic Drop Analysis of the Mark IA Storage Basket, No Holes in Bottom Plate
Run Date/Time:	3 February 1997/11:40:50am

Prepared By: Bob V. Winkel Date

Checked By: Joe Nichols 4/17/97 Date

COMPUTER RUN COVER SHEET

Project Number:	KH-8009-8
Computer Code:	ANSYS®-PC
Software Version:	5.0A
Computer System:	MS-DOS, Pentium® Processor
Computer Run File Number:	KH-8009-8-05
Unique Computer Run File Name:	Pltnhp.inp
Run Description:	Plastic Drop Analysis of the Mark IA Storage Basket Bottom Plate
Creation Date/Time:	5 March 1997/12:12:54pm

Bob V. Winkel 4/18/97

Prepared By: Bob V. Winkel Date

Joe Nichols 4/17/97

Checked By: Joe Nichols Date

LISTING OF PLTNH.INP FILE

```
/batch,list
/filenam,pltnhp
/prep7
/title,Mark IA Basket, Bot. Plt. w/o Holes, Solid Posts

SIZE = 0.5          ! element size
THICK1= 1.000       ! plate thickness
THICK2= .864        ! center pipe thickness (Sch. 160)
pressure = -190.4   ! uniform pressure load
OR = 22.625/2       ! plate outside radius
IR = 6.625/2-THICK2/2  ! center pipe mid-radius
HI = 22.1           ! height of center pipe/rods

et,1,shell43
et,2,shell43
et,3,solid45
et,4,contac52

r,1,THICK1
r,2,THICK2
r,4,1e7,0,1.

dens,1,.2854
ex,1,26.5E+06
nuxy,1,.3
tb,bkin,1,2
tbtemp,0
tbdata,1,20.7e3,.16e6
tbtemp,200
tbdata,1,20.7e3,.16e6

/com define bottom plate
csys,1      ! global cylindrical
k,15,0,0
k,1,IR,0
k,2,6.5,0
k,3,8.5,0
k,4,10.5,0
k,5,OR,0
k,6,OR,30
k,7,9.868,30
k,8,9.093,30
k,9,7.361,30
k,10,5.629,30
k,11,IR,30
k,12,OR,22.201
k,13,9.887,26.463

l,1,2          ! line 1
l,2,3          ! line 2
l,3,4          ! line 3
l,4,5          ! line 4
larc,5,12,15,OR   ! line 5
l,6,7
```

```
lesize,6,,,4
l,7,8
l,8,9
l,9,10
l,10,11
larc,1,11,15,IR   ! line 11
lesize,11,,5      ! 5 degree segments for inside arc
csys,0
l,2,10            ! line 12
l,3,9
l,4,8             ! line 14
l,7,13
lesize,15,,,3
l,13,12           ! line 16
lesize,16,,,4
csys,1
l,12,6            ! line 17
lesize,17,,,3

/com bottom plate areas
al,1,12,10,11   ! A1
al,2,13,9,12
al,3,14,8,13
al,4,5,16,15,7,14   ! A4

/com define center pipe
k,20,0,0,HI
k,21,IR,0, HI
k,25,IR,30,HI
larc,25,21,20,IR   ! line 18
lesize,18,,,5      ! 5 degree segments for inside arc
l,1,21             ! vertical line 19 at 0 degrees
l,11,25            ! vertical line 20 at 30 degrees
/com area 5 = center pipe
al,18,19,20,11

/com create sup. rod area & ext. into solid eles.
al,6,15,16,17   ! A6

/com merge areas and mesh
nummerg,all
esize,SIZE
amesh,1,4   ! bottom plate
amesh,6     ! support rod area
real,2
esize,.75
amesh,5

/com repeat mesh to obtain 60 degree model & merge nodes
csys
clocal,11,,,,,30
arsym,y,all
csys

/com support rod
type,3
```

```
esize,,20
vext,6,12,6,,,HI
nummrg,node

/com gap elements at support rod
n,2537,5.727,8.267,-1
n,2581,6.871,8.987,-1
n,2158,11.218,1.457,-1
n,2114,10.023,.827,-1
type,4
real,4
e,2537,537
e,2581,581
e,2114,114
e,2158,158

/com constrain edges of plate (60 deg. symm.)
nsel,s,loc,y,0
csys,1
nrotat,all
d,all,uy,,,,,rotx,rotz
nsel,all
nsel,s,loc,y,60
csys,1
nrotat,all
d,all,uy,,,,,rotx,rotz
nsel,all

/com axial constraint
csys,1
d,2537,all    ! corners of sup. rods below
d,2114,all
d,2158,all
d,2581,all
nsel,s,loc,z,0   ! center pipe below
nsel,r,loc,x,IR
d,all,uz
nall

/com bottom plate fuel loading (pressure)
asel,s,loc,z,0
asel,u,area,,6,12,6
sfa,all,,pres,pressure
asel,all

/com 35g loading from four baskets above
nsel,s,loc,z,HI
nsel,r,loc,x,2,5
sf,all,pres,8835
nall
nsel,s,loc,z,HI
nsel,r,loc,x,7,12
sf,all,pres,11066
d,all,ux,,,,,uy    ! hor. constr. on top of sup. rod (friction)
nall
fini
```

```
/solu
acel,,,35
!outpr,basic,1
nsubst,10
solve
fini

/post1
set,last
/ANGLE,  1,-30 ,XS,1
/WIN,1,SQUARE
/edge,,1
shell,bot
/show,graphics,pic,1
plnsol,s,int
PLNSOL,EPPL,EQV
PLNSOL,U   ,Z
!path,168,202
prsect
fini
/exit
```

COMPUTER RUN COVER SHEET

Project Number:	KH-8009-8
Computer Code:	ANSYS®-PC
Software Version:	5.0A
Computer System:	MS-DOS, Pentium® Processor
Computer Run File Number:	KH-8009-8-05
Unique Computer Run File Name:	Pltnhp.out
Run Description:	Plastic Drop Analysis of the Mark IA Storage Basket Bottom Plate
Run Date/Time:	5 March 1997/12:12:54pm

Bob V. Winkel 4/18/97

Prepared By: Bob V. Winkel Date

Joe Nichols 4/17/97

Checked By: Joe Nichols Date

COMPUTER RUN COVER SHEET

Project Number:	KH-8009-8
Computer Code:	ANSYS®-PC
Software Version:	5.0A
Computer System:	MS-DOS, Pentium® Processor
Computer Run File Number:	KH-8009-8-05
Unique Computer Run File Name:	H180p.inp
Run Description:	Horizontal Drop Analysis of the Mark IA Storage Basket
Creation Date/Time:	3 March 1997/2:49:04pm

Bob V. Winkel 4/18/97

Prepared By: Bob V. Winkel Date

Joe Nichols 4/17/97

Checked By: Joe Nichols Date

LISTING OF H180P.INP FILE

```
/batch,list
/filenam,h180p
/prep7
/title,Mark IA Basket 101g Side Drop

SIZE = 1.00         ! element size
THICK1=1.20         ! plate thickness
THICK2= .864        ! center pipe thickness
GLD = 101           ! 101g Side Drop Load
OR = 22.625/2       ! plate outside radius
IR = 6.625/2-THICK/2 ! plate inside radius
HI = 22.1           ! height of center pipe/rods

*afun,deg           ! use degrees for function input/output

et,1,shell43
et,2,shell43
et,3,beam4    ! 3-d elastic beam
et,4,mass21,,,2
et,5,contac52,,,,1
et,7,link11    ! centerline spring @ drop interface

r,1,THICK1
r,2,THICK2
r,3,10,100,100,10,10   ! rigid link
r,4,18.5            ! weight/5 (lb) from adjacent pipe
r,5,1e6,,,1e6       ! Gap element properties
r,6,2.874,.403,1.307,1.34,3.07   ! Support Rod prop.
r,7,1e4             ! Centerline Link Element
dens,1,.2854
ex,1,27E+06
nuxy,1,.3
ex,2,27e+06
dens,2,5.786   ! pseudo density of upper pipe elements for fuel load
ex,3,27e+06
dens,3,0.0     ! massless rigid links

tb,bkin,1,2    ! Plas. Prop.
tbtemp,0
tbdata,1,21.e3,0.16e6
tbtemp,200
tbdata,1,21.e3,0.16e6

/com define bottom plate
csys,1      ! global cylindrical
k,10,0,0
k,1,IR,0
k,2,OR,0
k,3,OR,30
k,4,OR,60
k,5,IR,60

l,1,2           ! line 1
```

```
larc,2,3,10,OR    ! line 2
lesize,2,,2.5     ! 2.5 deg. segments, outside arc
larc,3,4,10,OR    ! line 3
lesize,3,,2.5     ! 2.5 deg. segments
l,4,5             ! line 4
larc,5,1,10,IR    ! line 5
lesize,5,,10      ! 5 degree segments for inside arc

/com area 1 = bottom plate
al,1,2,3,4,5

/com define center pipe
k,20,0,0,HI
k,21,IR,0, HI
k,25,IR,60,HI
larc,25,21,20,IR  ! line 6
lesize,6,,10      ! 5 degree segments for inside arc
l,1,21            ! vertical line (7) at 0 degrees
l,5,25            ! vertical line (8) at 60 degrees
/com area 2 = center pipe
al,5,6,7,8

/com mesh areas

/com bottom plate
esize,SIZE
mat,1
real,1
amesh,1

/com center pipe
esize,1.5
type,2
real,2
amesh,2

/com repeat mesh for 180 deg. model
csys,1
agen,3,all,,,,60

/com merge coincident nodes
nummerg,node

/com add masses to center pipe hole to account for adj. pipe load
type,4
real,4
e,1
e,43
egen,4,1,-1

/com modify 30 arc of pipe elements to add fuel mass
csys,1
nsel,s,loc,x,IR
nsel,r,loc,y,150,180
esln,s,1
emodif,all,mat,2
```

```
esel,all

/com add support rods
type,3
real,6
mat,1
n,2114,10.586,30.2,22.318
n,2412,10.586,90.2,22.318
n,2710,10.586,150.2,22.318
e,114,2114
e,412,2412
e,710,2710
type,3
real,6
e,114,131   ! Spread rod interface to adjacent nodes
e,114,81
e,114,80
e,114,132
e,412,429
e,412,379
e,412,378
e,412,430
e,710,727
e,710,677
e,710,676
e,710,728

/com define offset nodes on drop side of bottom plate
n,5001,OR,0,-.5
n,5013,OR,30,-.5
fill,5001,5013
real,3
type,3
mat,3
e,2,5001
e,11,5002
egen,11,1,-1
e,10,5013

/com Bottom Plate interface w/ MCO
/com shift origin to MCO center to define MCO ID
n,6001,OR+.001,0,-.5
csys,1
j=0.001
*do,i,1,12
j=j+.002     ! gap increases 0.002" for every 2.5 degr.
n,6001+i,OR+j,2.5*i,-.5
*enddo
nrotat,6002,6013
d,6001,all,,,6013
type,7          ! Soft Spring @ MCO I.D. (model symm. line)
real,7
e,5001,6001
type,5          ! Gap elements @ MCO I.D.
real,5
e,5001,6001
```

```
e,5002,6002
egen,12,1,-1

/com constrain edges of center pipe at top
csys,1
nsel,s,loc,z,Hl
nsel,r,loc,x,IR
d,all,ux          ! x constraint, pipe end
nsel,r,loc,y,0,5
d,all,uz
nsel,all

/com symm bound. cond.
csys,0
nsel,s,loc,y,0              ! select nodes at y = 0
d,all,uy,0.0,,,,rotx,rotz   ! symmetry bc at y = 0
nall
eall

/com apply g load
acel,-1.5*GLD
fini

/solu
!outpr,basic,last
outres,,1
autots,on
nlgeom,on
nsubst,50
neqit,50
cnvtol,f,,.005
cnvtol,m,,.005
solve
save
fini

/post1
set,last
/show,graphics,pic,1
/VIEW,ALL, 1, 2, 3
eplot
prrs
esel,u,type,,3,5
/edge,,1
plnsol,s,int
plnsol,eppl,eqv
fini
/exit
```

COMPUTER RUN COVER SHEET

Project Number:	KH-8009-8
Computer Code:	ANSYS®-PC
Software Version:	5.0A
Computer System:	MS-DOS, Pentium® Processor
Computer Run File Number:	KH-8009-8-05
Unique Computer Run File Name:	H180p.out
Run Description:	Horizontal Drop Analysis of the Mark IA Storage Basket
Run Date/Time:	8 March 1997/2:49:04pm

Bob V. Winkel 4/18/97

Prepared By: Bob V. Winkel Date

Joe Nichols 4/17/97

Checked By: Joe Nichols Date

COMPUTER RUN COVER SHEET

Project Number:	KH-8009-8
Computer Code:	ANSYS®-PC
Software Version:	5.0A
Computer System:	MS-DOS, Pentium® Processor
Computer Run File Number:	KH-8009-8-05
Unique Computer Run File Name:	Rbuc2.inp
Run Description:	Mark IA Basket Support Rod Buckling Two Rods
Creation Date/Time:	3 February 1997/1:33:18pm

Bob V. Winkel 4/18/97

Prepared By: Bob V. Winkel Date

Joe Nichols 4/17/97

Checked By: Joe Nichols Date

LISTING OF RBUC2.INP FILE

```
/batch,list
/filenam,rodb2
/prep7
/title,Mark IA Basket Support Rod Buckling, Two Rods

!et,1,beam23,,,,,,4
et,1,beam23   ! rectangle
et,2,beam23
et,3,contac12

!r,1,2.874,1.34,6.384,3.072,2.916,1.897,2.816   ! general shape
r,1,2.874,.430,1.34    ! equivalent rectangle
r,2,10,83.333,10
r,3,0,1e8,,1.0    ! Longer Rod, no gap
r,4,0,1e8,,-.03    ! Shorter Rod, 30 mil gap

dens,1,.2854
ex,1,27.6E+06
nuxy,1,.1
tb,bkin,1,2
tbtemp,0
tbdata,1,17.6e3,0.3e6
tbtemp,200
tbdata,1,17.6e3,0.3e6

dens,2,.2854
ex,2,27.6E+06
nuxy,2,.3
mu,2,0.1
tb,bkin,2,2
tbtemp,0
tbdata,1,17.6e6,0.3e6
tbtemp,200
tbdata,1,17.6e6,0.3e6

n,1,
n,21,0,22.318
fill,1,21
n,22,-.25,22.318
n,23,-.25,23.
n,101,-.5
n,121,-.5,22.288
fill,101,121
n,122,-.25,22.288

type,1
real,1
e,1,2
egen,20,1,1
e,101,102
egen,20,1,-1
type,2
real,2
```

```
mat,2
e,21,22    ! rigid link for load offset
e,121,122  ! 2nd rod rigid link
type,3
real,3
e,22,23
real,4
e,122,23
eplot

/com Boundary Conditions
d,1,all
d,101,all
d,23,all
fini

/solu
d,23,uy,-.012
autots,on
nlgeom,on
cnvtol,f,,.01
cnvtol,m,-1
outres,all,1
time,1
nsubst,10
!outpr,basic,10
lswrite,1
time,2
d,23,uy,-.10
nsubst,1000
outres,all,2
!outpr,basic,10
lswrite,2
lssolve,1,2
fini

/post26
NSOL,2,23,U,Y,uy23
RFORCE,3,23,F,Y,fy23
prod,4,3,,,3fy1,,,-3
ADD,5,2,,,,,,-1
prvar,2,3,4,5
xvar,5
/WIN,1,SQUARE
/AXLAB,X,Rod Vertical Displ. (in.)
/AXLAB,Y,Support Rod Force (lb)
/show,graphics,pic,1
plvar,4
fini

/post1
set,last
pldisp
fini
/exit
```

COMPUTER RUN COVER SHEET

Project Number:	KH-8009-8
Computer Code:	ANSYS®-PC
Software Version:	5.0A
Computer System:	MS-DOS, Pentium® Processor
Computer Run File Number:	KH-8009-8-05
Unique Computer Run File Name:	Rbuc2.out
Run Description:	Mark IA Basket Support Rod Buckling Two Rods
Run Date/Time:	3 February 1997/1:36:56pm

Bob V. Winkel 4/18/97

Prepared By: Bob V. Winkel Date

Checked By: Joe Nichols 4/17/97

Date

PARSONS	CALCULATION PACKAGE	FILE NO:	KH-8009-8-06
		DOC. NO:	HNF-SD-SNF-DR-003, Rev. 0, Appendix 8
		PAGE	1 of 87 68 KMB 5/28/97

PROJECT NAME:	CLIENT:
MCO Final Design	Duke Engineering Services Hanford

CALCULATION TITLE:

STRESS ANALYSIS OF THE MARK IV STORAGE BASKET

PROBLEM STATEMENT OR OBJECTIVE OF CALCULATION:

Perform a stress analysis of the Mark IV Storage Basket in accordance with Revision 3 of the MCO Performance Specification. Two loading conditions are considered:

1. Lifting at a max. temperature of 100° C.
2. Deadweight stacking within the MCO at a design temperature of 375° C.

DA Parsons 4/9/97

DOCUMENT REVISION	AFFECTED PAGES	REVISION DESCRIPTION	PREPARED BY INITIALS / DATE	CHECKED BY INITIALS / DATE	APPROVED BY INITIALS / DATE
0	1-67	Initial Issue	Bob Winkel Bob C. Winkel BW 4/18/97	Joe Nichols Joe Nichols JN 4/17/97	Charles Temus Charles Temus CT 4/11/97

TABLE OF CONTENTS

1. INTRODUCTION 6

2. REFERENCES 6

3. ASSUMPTIONS 7

4. GEOMETRY 7

5. MATERIAL PROPERTIES 9

6. ACCEPTANCE CRITERIA 9

7. LOAD CONDITIONS & COMBINATIONS 15

8. STRESS ANALYSIS CALCULATIONS 15

8.1 Center Pipe 18

8.2 Support Rod 22

8.3 Fuel Retaining Bars 23

8.4 Support Ring 26

8.5 Bottom Plate 28
8.5.1 Deadweight Stacking Load Condition 28
8.5.2 Lifting Load Condition 31

8.6 Load Distribution and Basket Interface Considerations 35

8.7 Fillet Weld Finite Element Analysis 39

8.8 Component Stress Results Summary 40

LIST OF TABLES

TABLE 1. MARK IV STORAGE BASKET STRUCTURAL COMPONENTS. 10
TABLE 2 ASME CODE MATERIAL PROPERTIES FOR TYPE 304L STAINLESS STEEL 11
TABLE 3. ALLOWABLE STRESSES - DEADWEIGHT. 12
TABLE 4. MARK IV STORAGE BASKET WELD STRESS ALLOWABLES. 14
TABLE 5. SUMMARY OF MARK IV BASKET STRUCTUAL EVALUATION. 41

LIST OF FIGURES

FIGURE 1. SIXTY-DEGREE SECTOR IDENTIFYING MARK IV STORAGE BASKET PRIMARY STRUCTURAL COMPONENTS. 8
FIGURE 2. SIXTY-DEGREE SECTOR FINITE ELEMENT MODEL OF THE MARK IV STORAGE BASKET. 30
FIGURE 3. STRESS INTENSITY CONTOUR PLOT, DEADWEIGHT STACKING LOAD CONDITION. 31
FIGURE 4. STRESS INTENSITY CONTOUR PLOT FOR AN INSIDE LIGAMENT THICKNESS OF 0.085 IN. 33
FIGURE 5. STRESS INTENSITY CONTOUR PLOT FOR AN INSIDE LIGAMENT THICKNESS OF 0.210 IN. 34

LIST OF APPENDICES

APPENDIX A. COMPUTER RUN COVER SHEETS AND INPUT FILE LISTINGS 42

1. INTRODUCTION

This calculation documents the evaluation of the Mark IV Storage Basket for lifting and deadweight loading. The structural adequacy evaluation is based upon ANSI N14.6 for the lifting loading and Section III of the ASME Code for the deadweight stacking loading within the MCO.

2. REFERENCES

1. Duke, 1996, *Performance Specification for the Spent Nuclear Fuel Multi-Canister Overpack*, HNF-S-0426, Rev. 3, Duke Engineering and Services Hanford, Richland, Washington.

2. Duke, 1996, "MCO Mark IV SNF Storage Basket", Drawing No. H-2-828070, Rev. C, Duke Engineering and Services Hanford, Richland, Washington.

3. ASME, 1995, *ASME Boiler and Pressure Vessel Code, Section II, Materials, Part D--Properties*, American Society of Mechanical Engineers, New York, New York.

4. ASME, 1995, *ASME Boiler and Pressure Vessel Code, Section III, Subsection NG*, American Society of Mechanical Engineers, New York, New York.

5. ASME, 1995, A*SME Boiler and Pressure Vessel Code, Section III, Subsection NF*, American Society of Mechanical Engineers, New York, New York.

6. ANSI, 1993, *ANSI National Standard for Radioactive Materials- Special Lifting Devices for Containers Weighing 10,000 Pounds (4500 kg) or More*, American National Standards Institute, New York, New York.

7. Roark, R. J. and Young, W. C., 1975, *Formulas for Stress and Strain*, 5th Edition, McGraw-Hill, New York, New York.

8. AISC, 1989, *Manual of Steel Construction, Ninth Edition,* American Institute of Steel Construction, Chicago, Illinois.

3. ASSUMPTIONS

1. All welds made and inspected in accordance with ASME Code, Section III, Subsection NG (Reference 4). For the Mark IV Storage Basket welds, a "surface visual examination" was assumed.

2. For the dead weight loading when the baskets are stacked within the MCO, it was conservatively assumed that the center tube carries the weight of the baskets above, for center tube structural adequacy evaluations, and for the support rod evaluations, it was conservatively assumed that the support rods carry the full weight of the baskets above.

3. Other assumptions as noted within the calculation documentation.

4. GEOMETRY

The Mark IV Storage Basket geometry is defined in Drawing No. H-2-828070. The storage basket primary structural components are identified in the 60° sector shown in Figure 1. The geometry pattern shown in Figure 1 is repeated every 60°, including the Support Rod. Each hole in the bottom plate is designed to contain a single fuel rod, resulting in a capacity of 54 fuel rods per basket.

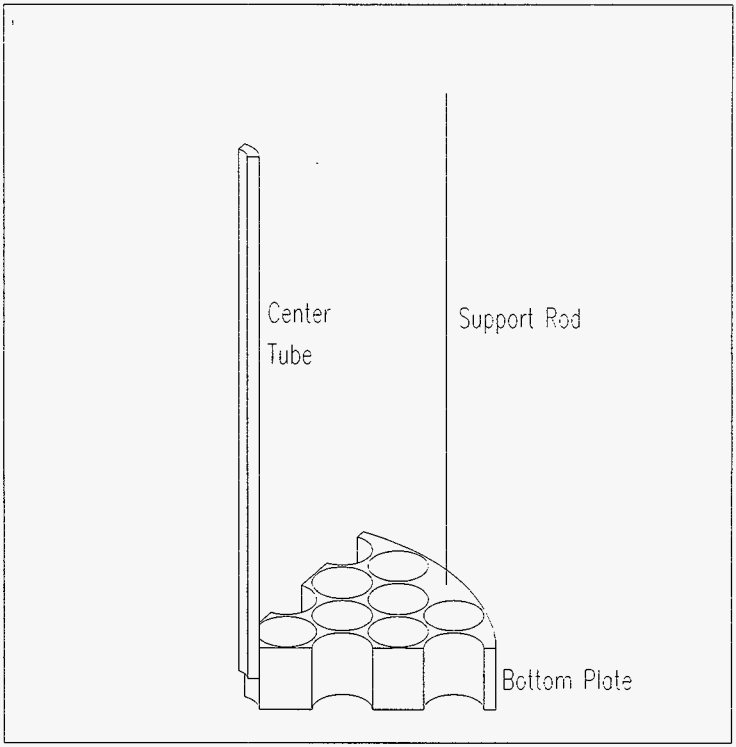

Figure 1. Sixty-Degree Sector Identifying Mark IV Storage Basket Primary Structural Components.

The Support Rods are constructed from 1-1/4 in. round bar which are shrunk fit into the bottom plate. The Center Tube is fabricated from 2.75 in. O.D., 1.75 I.D. tubing and is also connected to the bottom plate using a shrink fit. In addition to the shrink fit, the center tube is attached to the bottom plate with fillet welds. The baskets are designed to be stacked within the MCO such that the center tube and six support rods share the weight of the baskets stacked above. As noted in Section 3, establishing the center tube/support

rods load division was avoided by conservatively assuming that either the center tube or support rods carried the entire stack weight.

Not shown are a series of 1/4-in. x 3/8-in. fuel retaining bars which cross the bottom diameter of each hole to prevent the fuel from passing through the hole. Each hole contains a single retaining bar which extends inside a groove connecting a line of holes and is welded to each ligament between the holes. Also not shown is a 1-1/4-in. wide, 3/8-in. high support ring which is welded to the bottom of the bottom plate near the O.D. The support ring interfaces with the six Support Rods of a basket immediately below when the baskets are stacked.

A third component not shown is a 0.05-in. thick, 11.0-in. high sheet metal band at the basket O.D. immediately above the bottom plate. During normal operations, this sheet metal shroud is not subjected to significant loading and is considered to be non-structural.

The Mark IV components which were subjected to a structural evaluation are listed in Table 1. Structural adequacy of each component is addressed in Section 8. A summary of the evaluation results is provided in Section 8.6.

5. MATERIAL PROPERTIES

Per the Reference 2 drawing, the specified material for the Mark IV Storage Basket components is 304L stainless steel. For this analysis, the only mechanical properties of interest are the elastic modulus, yield strength, ultimate strength, and ASME stress allowable, S_m. The appropriate values were extracted from Reference 3, and are listed in Table 2.

6. ACCEPTANCE CRITERIA

For the lifting and dead weight stacking loadings considered, the appropriate acceptance criteria is discussed below.

6.1 Lifting Loads

Per Section 4.12.3 of the Reference 1 Performance Specification, the basket design "shall meet the safety factors required by the American National Standards Institute (ANSI) N14.6-1986. The ANSI safety factors apply from 5°C to 100°C". Section 4.2.1.1 of N14.6 specifies that "the load bearing members of a special lifting device shall be

Table 1. Mark IV Storage Basket Structural Components.

Component Name	Component Part No. in Dwg. H-2-828070	Component Function
Center Tube	5	(1) Provide support to above baskets when stacked inside the MCO (2) Provide dip tube access to the bottom of the MCO (3) Lifting grapple interface
Support Rod	6	Provide support to above baskets when stacked inside the MCO
Bottom Plate	2	(1) Mounting base for center pipe and support rods. (2) Maintain position of spent fuel rods after the rods are inserted into the basket
Retaining Ring	11	Bearing surface for adjacent (below) basket support rods
Fuel Retaining Bar	12	Vertical support for spent fuel rods
Center Tube Welds	-	Center tube structural attachment to Bottom Plate
Support Ring Welds	-	Support Ring structural attachment to Bottom Plate
Fuel Retaining Bar Welds	-	Fuel Retaining Bar structural attachment welds

Table 2
ASME Code Material Properties for Type 304L Stainless Steel

Temperature °F	Temperature °C	E ble TM-1, Group	S_m Table 2A, p.322	S_y Table Y-1, p.524	S_u Table U, P. 441
-20	--	--	16.7 ksi	25.0 ksi	70.0 ksi
70	--	28.3E+06	--	--	--
100	--	--	16.7 ksi	25.0 ksi	70.0 ksi
200	--	27.6E+06	16.7 ksi	21.3 ksi	66.2 ksi
212	100	27.5E+06	16.7 ksi	21.0 ksi	65.6 ksi
300	--	27.0E+06	16.7 ksi	19.1 ksi	60.9 ksi
700	--	24.8E+06	13.5 ksi	14.9 ksi	56.2 ksi
707	375	24.8E+06	13.5 ksi	14.9 ksi	56.2 ksi
750	--	--	13.3 ksi	14.7 ksi	55.9 ksi
800		24.1E+06	--	--	--

s4allow.xls

Notes 1: Underlined values determined by linear interpolation, all other values taken from Section II, Part D of the ASME Code.
2: Value of E taken from Table TM-1 for Material Group G.

capable of lifting three times the combined weight of the shipping container with which it will be used, plus the weight of intervening components of the special lifting device, without generating a combined shear stress or maximum tensile stress at any point in the device in excess of the corresponding minimum tensile yield strength of their materials of construction. They shall also be capable of lifting five times that weight without exceeding the ultimate tensile strength of the materials." ANSI N14.6 also states that the shear stress shall be taken as an average value over the cross section, and that the tensile stress may be due to direct or bending loads. The bending stress is defined as being linear over the cross section.

The "load bearing members of a special lifting device" are interpreted to apply to all components of the storage baskets in the load path between the lifting grapple and fuel. At the maximum lifting temperature of 100°C, the ANSI N14.6 allowables are:

$$\frac{Sy}{3} = \frac{21.04ksi}{3} = 7.01ksi$$
$$\frac{Su}{5} = \frac{65.6ksi}{5} = 13.12ksi$$
$$\Rightarrow Use: Pm + Pb \leq 7.01ksi$$

6.2 Deadweight Loads

Per Section 4.12.3 of Reference 1, the "baskets will be able to support the fuel at 1.0g while at 375°C". Reference 1 does not specify the acceptance for this loading. For consistency with the Mark 1A basket criteria, Reference 4 (Subsection NG) was assumed. For membrane and membrane plus bending stresses, the allowable stresses of Table 3 are applied.

Table 3. Allowable Stresses - Deadweight.

Temperature		S_m	Design/Level A Stress Limits		
°F	°C	[Table 2]	P_m (S_m)	P_L (1.5 S_m)	(P_m or P_L) + P_b (1.5 S_m)
212	100	16.7 ksi	16.7 ksi	25.1 ksi	25.1 ksi
707	375	13.5 ksi	13.5 ksi	20.3 ksi	20.3 ksi

s4allow.xls

Notes 1: Design & Level A Stress Limits from NG-3221 & NG-3222, respectively.

2: Axial compressive stresses must be limited to values established in accordance with one of the following:

- NG-3133.3 (external pressure)
- NG-3133.6 (axial compression on cylindrical shells)
- NF-3322.1(c) (column type members)
- Code Case N-284 (shell structures)

The bottom basket center pipe and support rods are subjected to compression loading, with the potential for column buckling. Since Subsection NG does not address column buckling, Subsection NG was supplemented by Subsection NF. For the center pipe, the more restrictive of NG-3133.6 (shell buckling) or NF-3322.1(c)(2) was used. For the support rods, the NF criteria was used.

6.3 Weld Criteria

As indicated in Table 1, the Mark IV Storage Basket design includes three structural welds. Two of the welds are fillet welds (retaining bars and support ring). The support ring weld is loaded only during lifting operations, supports only the deadweight of the support ring, and is not significantly stressed. The support ring weld is controlled by minimum weld size requirements, rather than stress limits. The third weld (center pipe/bottom plate) was originally a fillet weld, but was later changed to a bevel weld when the inside diameter of the bottom plate was reduced in order to thicken the innermost ligaments. The acceptance criteria for these two weld types are addressed separately below.

6.3.1 Fillet Welds

For deadweight stacking loading (375°C), the ASME-NG allowable fillet weld stresses are controlled by Para. NG-3350. Table NG-3352-1 specifies weld quality factors for various types of welds and examination methods. For the Mark IV Storage Baskets, a "surface visual examination" was assumed. Para. NG-3352 states that the quality factors are applied by "multiplying the allowable stress limit" by the quality factor specified in Table NG-3352-1. However, NG-3352 has no specific direction for defining the "allowable stress limit" for fillet welds. A conservative approach would be to apply the quality factors to the "pure shear" limit of $0.6S_m$, (NG-3227.2). Based upon a detailed finite element analysis of a typical fillet weld (Section 8.7), a more reasonable approach is to multiply the weld quality factor times the membrane stress limit of S_m, using the throat area of the fillet weld. From Table NG-3352-1, the appropriate weld quality factors range from 0.35 to 0.4, resulting in fillet weld throat stress allowables ranging from 4.7 ksi to 5.4 ksi.

For the lifting load condition, ANSI N14.6 applies. As indicated in Section 6.0, above, the limiting criteria for lifting for 304L SS is one third of the yield strength. For a fillet weld loaded in shear, a reasonable estimate of the shear yield strength is 0.6 times the tensile yield (see, e.g., Para. NG-3227.2), the lifting loading weld stress limits become 0.6xSy/3 = 0.2Sy. For the 100°C max. lifting temperature, this results in an allowable of 0.2x21.04 = 4.21ksi, which is less than the deadweight stacking allowable stress. Since the retaining

bar weld loading is the same for both the deadweight stacking and lifting load conditions, the allowable is controlled by the lifting load condition.

6.3.2 Bevel Weld

The center pipe/bottom plate bevel weld is loaded in compression bearing during deadweight stacking loading. The weld joint was sized to assure that there was sufficient bearing area for the deadweight stacking load condition. As indicated in Table 9.1 of Reference 8, a partial penetration groove weld joint loaded in compression bearing, the allowable stresses are the same as the base metal. Therefore, it is not necessary to apply the weld quality factors for the deadweight stacking load condition. Base metal membrane and membrane plus bending load limits were applied to the deadweight stacking load condition.

For the lifting load condition, the center pipe/bottom plate weld is loaded in tension. The maximum principal (conservative relative to stress intensity or equivalent stress) membrane plus bending stresses in the weld were compared to the (yield stress)/3 limit as an acceptance criteria.

Table 4. Mark IV Storage Basket Weld Stress Allowables.

Weld Location	Critical Load Condition	Quality Factor, n	Allowable Stress, ksi
Center Pipe to Bottom Plate	Deadweight Stacking (375°C)	0.4	0.24Sm = 3.24
Fuel Support Bar to Bottom Plate	Deadweight Stacking (375°C)	0.35	0.21Sm = 2.84
Support Ring to Bottom Plate	Lifting (100°C)	N/A	0.2Sy = 4.21

7. LOAD CONDITIONS & COMBINATIONS

As previously mentioned, the Mark IV Storage Baskets were evaluated for two load cases:

1. Lifting of the basket and contents with a maximum temperature of 100°C. This load condition was evaluated using ANSI N-14.6 safety factors.
2. Deadweight stacking of the baskets inside the MCO at the design temperature of 375°C. A full stack consists of five baskets, resulting in the bottom basket supporting four baskets above.

No other loads were considered. Note that Section 4.11 of the performance specification exempts the Mark IV baskets from drop accident loading.

8. STRESS ANALYSIS CALCULATIONS

The Mark IV Storage Baskets were evaluated using both hand calculations (Mathcad) and finite element calculations (ANSYS). The finite element calculations were limited to stress predictions in the relatively complex bottom plate (Section 8.5).

The Mathcad calculations pages were copied from the Mathcad file. The first few pages provide the basic Mathcad input parameters and other preliminaries used in the calculations. The Mathcad pages for each component evaluated follow in the appropriate sections below.

INPUT PARAMETERS:

$d_r := 1.25 \cdot in$	Support Rod Diameter
$l_r := 24.817 \cdot in$	Support Rod Length Extending Above Bottom Plate
$S_y := 14900 \frac{lb}{in^2}$	304L Yield Strength @ Design Temp. of 375 degC

$E := 24.8 \cdot 10^6 \cdot \frac{lb}{in^2}$ 304L Young's Modulus @ Design Temp.

$D_o := 2.75 \cdot in$ Center Pipe O.D.

$T := 0.5 \cdot in$ Center Pipe Wall Thickness

$A_p := \frac{\pi}{4} \cdot \left[D_o^2 - (D_o - 2 \cdot T)^2 \right]$

$A_p = 3.534 \cdot in^2$ Center Pipe Area

$I_p := \frac{\pi}{64} \cdot \left[D_o^4 - (D_o - 2 \cdot T)^4 \right]$

$I_p = 2.347 \cdot in^4$ Center Pipe Mom. of Inertia

$r_p := \frac{1}{4} \cdot \sqrt{D_o^2 - (D_o - 2 \cdot T)^2}$

$r_p = 0.446 \cdot in$ Center Pipe Rad. of Gyration

$W_b := 3200 \cdot lb$ Mark-IV Loaded Basket Upper Bound Weight, Appendix 3 of Design Report: 3190 lb

$D_{pi} := 2.50 \cdot in$ Inside Dia. of Bottom Plate

ALLOWABLE STRESSES

LIFTING LOAD CONDITION:

Criteria: ANSI N14.6, Temp. = 100 degC, Establish Allowable Stresses:

Basic tension allowable (304L Material)-

$$S_{u100} := 65600 \frac{lb}{in^2}$$

$$\frac{S_{u100}}{5} = 1.312 \cdot 10^4 \cdot \frac{lb}{in^2}$$

Base material lifting allowable controlled by yield strength

$$S_{y100} := 21040 \frac{lb}{in^2}$$

$$\frac{S_{y100}}{3} = 7.013 \cdot 10^3 \cdot \frac{lb}{in^2}$$

Fillet Weld Allowable Stresses:

For a fillet weld, a direct application of ANSI N14.6 is to limit the shear stress in the throat of the weld to 1/3 of the yield stress in pure shear. Since the shear yield stress is close to 60% of the tensile yield (see, e.g. Para. NG-3227.2: pure shear allow. = 0.6Sm), this results in a weld shear stress allowable of 0.2 Sy.

DESIGN CONDITION:

Criteria: Assume ASME NG allowables, Design Temp. = 375 degC (707 degF),

$$S_{m375} = 13500 \cdot \frac{lb}{in^2}$$

$$S_{y375} = 14900 \cdot \frac{lb}{in^2}$$

Fillet Weld Allowable Stress:

Section 6.3 of this calculation report addresses the Mark IV fillet weld allowable stresses, which are applied to the Mark IV basket fillet welds below.

8.1 Center Pipe

Membrane Stress (controlled by design condition)

$$P_m := \frac{4 \cdot W_b}{A_p}$$

Conservatively assume all four baskets above bottom basket carried by center pipe

$$P_m = 3.622 \cdot 10^3 \cdot \frac{lb}{in^2}$$

$$Ratio := \frac{P_m}{S_{m375}}$$

$Ratio = 0.268$ Membrane stress OK

Check Buckling per ASME NG-3133.6 (also consider NF-3322.1(c)(2) for column buckling)

$T = 0.5 \cdot in$

$$R := \frac{D_o}{2} - T$$

$R = 0.875 \cdot in$

$$A := \frac{0.125}{\left(\frac{R}{T}\right)}$$

$A = 0.071$

Obtain B value from ASME Code, Section II, Figure HA-3

$$B := 7560 \cdot \frac{lb}{in^2}$$

$$Ratio := \frac{P_m}{B}$$

$Ratio = 0.476$ Axial compressive stress limit OK per ASME NG

Checking column buckling per ASME NF 3322.1:

$$E = 2.48 \cdot 10^7 \cdot \frac{lb}{in^2}$$

$I_p = 2.347 \cdot in^4$

$K_p := 0.8$ Effective length factor, pinned @ top, Reference 8

$l_p := l_r$

$r_p = 0.53 \cdot in$

$$\frac{K_p \cdot l_p}{r_p} = 37.436 \quad < 120, \text{ use Eq. (6a)}$$

$$F_a := S_{y375}\left[0.47 - \frac{\frac{K_p \cdot l_p}{r_p}}{444}\right]$$

$$F_a = 5.747 \cdot 10^3 \cdot \frac{lb}{in^2} \quad < B, \text{ above, column buckling controls}$$

$$Ratio := \frac{P_m}{F_a}$$

$$Ratio = 0.63 \quad < 1.0, \text{ ASME NF limits met}$$

Evaluate Center Pipe/Bottom Plate Weld:

Weld geometry:

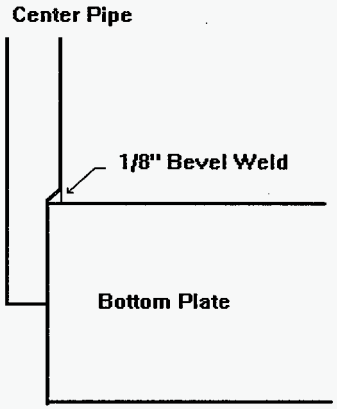

BEVEL WELD SIZING:

Check membrane stress in weld for deadweight stacking for a 1/8" bevel weld:

$$A_{weld} := \frac{\pi}{4}\cdot\left[(2.75\cdot in)^2 - (2.5\cdot in)^2\right]$$

$$P_m := \frac{4\cdot W_b}{A_{weld}}$$

$$P_m = 1.242\cdot 10^4 \cdot \frac{lb}{in^2}$$

$$Ratio := \frac{P_m}{S_{m375}}$$

$$Ratio = 0.92$$

1/8" weld is sufficient for deadweight stacking loading

Check 1/8" Bevel Weld for lifting load condition (maximum lifting temperature = 100°C):

$$P_m := \frac{W_b}{A_{weld}}$$

$$P_m = 3.104\cdot 10^3 \cdot \frac{lb}{in^2}$$

$$\frac{S_{y100}}{3} = 7.013\cdot 10^3 \cdot \frac{lb}{in^2}$$

Maximum lifting temperature allowable

$$\text{Ratio} := \frac{P_m}{\left(\frac{S_{y100}}{3}\right)}$$

$\text{Ratio} = 0.443$

Thus, the bevel weld is adequate per the Reference 6 allowable of Sy/3.

8.2 Support Rod

$d_r := 1.25 \cdot in$

$I_r := \frac{\pi \cdot d_r^4}{64}$

$I_r = 0.12 \cdot in^4$

$K_r := 2.1$ Effective length factor, fixed-free, Reference 8

$l_r := 24.817 \cdot in$

$r_r := \frac{d_r}{4}$

$r_r = 0.313 \cdot in$

$A_r := \frac{\pi \cdot d_r^2}{4}$

$A_r = 1.227 \cdot in^2$

Using ASME NF 3322.1(c)(2)

$$\frac{K_r \cdot l_r}{r_r} = 166.77 \qquad > 120, \text{ use Eq. (6b)}$$

$$F_a = S_{y375} \cdot \left[0.40 - \frac{\frac{K_r \cdot l_r}{r_r}}{600} \right]$$

$$F_a = 1.806 \cdot 10^3 \cdot \frac{lb}{in^2}$$

Conservatively assuming the bottom basket support rods carry the full weight of the four baskets above,

$$F_r := \frac{4 \cdot W_b}{6 \cdot A_r}$$

$$F_r = 1.738 \cdot 10^3 \cdot \frac{lb}{in^2}$$

$$Ratio := \frac{F_r}{F_a}$$

$Ratio = 0.962$ <1.0, ASME NF requirements met for support rods

8.3 Fuel Retaining Bars

Critical load condition is lifting due to the ANSI N-14.6 lower allowables.

$b := 0.25 in$ Retaining bar cross section per dwg.H-2-828070

$h := 0.375\,in$

$I_b := \frac{b \cdot h^3}{12}$

$I_b = 0.001 \cdot in^4$

Due to the deflection of the bar, the load would tend to concentrate near the O.D. of the hole. However, even if it is conservatively assuming a simply supported beam with the fuel rod load concentrated at the center, the support bar is adequate:

$W_f := 55.4 \cdot lb$

$l_b := 2.75 \cdot in$

$\sigma_b := \frac{W_f l_b \cdot \frac{h}{2}}{4 \cdot I_b}$

$\sigma_b = 6.5 \cdot 10^3 \cdot \frac{lb}{in^2}$

Using ANSI N-14.6, the bending stress is limited to Sy/3 @ 100 degC-

$\frac{S_{y100}}{3} = 7.013 \cdot 10^3 \cdot \frac{lb}{in^2}$

$Ratio := \frac{\sigma_b}{\left(\frac{S_{y100}}{3}\right)}$

$Ratio = 0.927$

Fuel retaining bar OK in bending.

Checking shear in the retaining bar,

$$F_s := \frac{W_f}{2 \cdot b \cdot h}$$

$$F_s = 295.467 \cdot \frac{lb}{in^2}$$

The yield strength in shear is about 60% of the tensile yield, resulting in a lifting allowable of 0.6(Sy/3) = 0.2Sy.

$$Ratio := \frac{F_s}{0.2 \cdot S_{y100}}$$

$$Ratio = 0.07$$

Retaining bar OK in shear

Check the length of the fillet welds attaching the fuel retaining bars to bottom plate. Assume 1/8" welds (ASME NG & NF minimum), on one side of the bar. Since the available weld length is less than 4 x 1/8" = 1/2", the maximum effective weld size is 0.375"/4 = 3/32" (ASME NF-3324.5(d)(3)(b)):

$$A_w := \frac{\sqrt{2}}{2} \cdot \frac{3}{32} \cdot in \cdot 0.375 \cdot in$$

$$A_w = 0.025 \cdot in^2$$

$$Ratio := \frac{\frac{W_f}{A_w}}{0.35 \cdot 0.6 \cdot S_{m375}}$$

$$Ratio = 0.786$$

Thus, a single 1/8" fillet weld, the full height (3/8") of the bar, at each ligament is adequate.

8.4 Support Ring

The critical loading for the support ring occurs in the next-to-the-bottom basket when the baskets are stacked inside the MCO at the design temperature. The critical support ring location corresponds to a support rod position from the bottom basket being centered on the fuel hole support ring span, as shown below. Conservatively assume bottom basket rod supports 1/6 of weight of 4 baskets stacked above (no support from center tube):

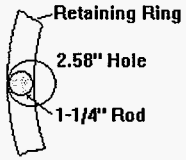

$$F_r := \frac{4 \cdot W_b}{6}$$

$$F_r = 2.118 \cdot 10^3 \cdot lb$$

Assume a 3/8" thick, 2.58" x 1.25" rectangular plate simply supported on 3 sides. As the plate deflects under the support rod loading, the load would tend to concentrate furthest from the free edge. Thus, it is reasonable to assume that the loading linearly increases away from the free edge. Using Table 26, Case 2d. from Roark 5th Ed. (Reference 7) and the rectangular approximation below,

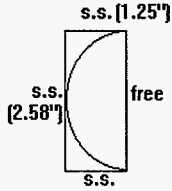

$$q := \frac{2 \cdot F_r}{(2.58 \cdot in \cdot 1.25 \cdot in)}$$

$q = 1.323 \cdot 10^3 \cdot \frac{lb}{in^2}$

$\beta := 0.11$ a/b = 0.50

$b := 2.58 \cdot in$

$t := 0.375 \cdot in$

$P_b := \frac{\beta \cdot q \cdot b^2}{t^2}$ Rectangular Plate Approximation

$P_b = 6.889 \cdot 10^3 \cdot \frac{lb}{in^2}$

ASME III-NG Design Cond. Allowable (Para. NG-3221.2):

$1.5 \cdot S_{m375} = 2.025 \cdot 10^4 \cdot \frac{lb}{in^2}$

$Ratio := \frac{P_b}{1.5 \cdot S_{m375}}$

$Ratio = 0.34$ < 1.0 O.K.

The fillet welds which attach the support ring to the bottom plate are loaded only during lifting operations. During lifting, the weld stresses are very small, since they carry only the dead weight of the support ring:

Assume 1" welds @ 30 deg. (5.92") spacing (12 welds total):

$W_{ring} = \frac{\pi}{4} \cdot \left[(22.375 \cdot in)^2 - (19.875 \cdot in)^2 \right] \cdot 0.375 \cdot in \cdot 0.286 \cdot \frac{lb}{in^3}$

$W_{ring} = 8.897 \cdot lb$

For 1/8" fillet welds (Min. size per ASME III, Fig. NG 4427-1), the throat shear stress is

$$\tau := \frac{W_{ring}}{0.125 \cdot in \frac{\sqrt{2}}{2} \cdot 12 \cdot 1 \cdot in}$$

$$\tau = 8.388 \cdot \frac{lb}{in^2}$$

$$0.2 \cdot S_{y100} = 4.208 \cdot 10^3 \cdot \frac{lb}{in^2}$$

$$Ratio := \frac{\tau}{0.2 \cdot S_{y100}}$$

$$Ratio = 0.002$$ << 1.0, weld stresses O.K.

The fillet welds which attach the support ring to the bottom plate are loaded only during lifting operations. During lifting operations, the weld stresses are negligible, since they carry only the dead weight of the support ring. However, Fig. NG-4427-1 of Subsection NG specifies a minimum fillet weld dimension of 1/8". However, since the weld is essentially non-structural, a smaller weld size is permissible.

8.5 Bottom Plate

The bottom plate was evaluated for both the deadweight stacking condition inside the MCO and the lifting condition. These load conditions are evaluated in the subsections that follow.

8.5.1 Deadweight Stacking Load Condition

The critical bottom plate for this load condition is the second basket from the bottom with the bottom basket support rods rotated 30° relative to the support rods for the basket immediately above. It was conservatively assumed that the weight of the top three baskets is carried entirely by the support rods of the fourth basket. This configuration develops the maximum bending stress in the bottom plate.

For this load condition, the fourth basket support rods would each carry one-sixth of the weight of the top three baskets (single basket weight = 3177 lb per Appendix A of the Performance Spec.):

$$F_r = (3x3177)/6 = 1588 \text{ lbs.}$$

In addition to the loading on the support rods, the bottom plate also carries the weight of the fuel rods in the basket. The fuel rod weight was applied as an equivalent pressure (Single rod weight = 55.4 lb per App. A of the Performance Spec.):

$$\text{Area} = \tfrac{1}{4}[(22.625)^2 - (2.75)^2]\pi - \tfrac{1}{4}(2.58)^2(54\pi) = 113.8 \text{ in}^2$$

$$\text{Press} = 54(55.4)/\text{Area} = 26.3 \text{ psi.}$$

The equivalent pressure approach was judged to be conservative because it moves the center of loading radially outward, relative to the actual fuel support locations, resulting in higher bending moments at the maximum stress locations (outer ligaments, as shown below).

Due to the 60° symmetry, only one-sixth of the basket was modeled. The 60° sector ANSYS finite element model of the Mark IV Storage Basket is shown in Figure 2. The bottom plate and center pipe were modelled using SOLID45 elements, and the support rod was modelled using BEAM4 elements. To account for a 1/8-inch reduction of wall thickness at the bottom of the center pipe, the thinner wall dimension was conservatively used for the full height of the pipe.

For the deadweight stacking load condition, the loading was comprised of a 1588 lb downward vertical load at the top of the support rod, a 26.3 psi downward pressure on the bottom plate, and a 1.0g deadweight acceleration. The model was constrained vertically at the bottom outer corners (adjacent basket, below, support rod locations, 30° rotation). The ANSYS input data for the deadweight stacking load case is provided in the pltstk.inp and plstk.out files.

The deadweight stacking load case results are summarized in the form of a stress intensity contour plot shown in Figure 3. Note that the higher stress intensity values occur in the outermost ligaments. The maximum stress intensity location is the bottom (inside) of the ligaments adjacent to the support rod constraints. As indicated in the legend, the maximum stress intensity is just under 10 ksi. As directed by Table NG-3217-1 of the ASME Code, it is permissable to define the primary bending stress in a ligament as the average of the

surface stress through the width of a ligament. However, for simplicity, the maximum ligament stress of 7.3 ksi was used. From Table 3, the allowable primary membrane plus bending stress intensity is 20.3 ksi, resulting is a stress ratio of 7.3/20.3 = 0.36 for the deadweight stacking load case. This relatively low stress ratio indicates that further refinement of the modeling and load application is not warranted.

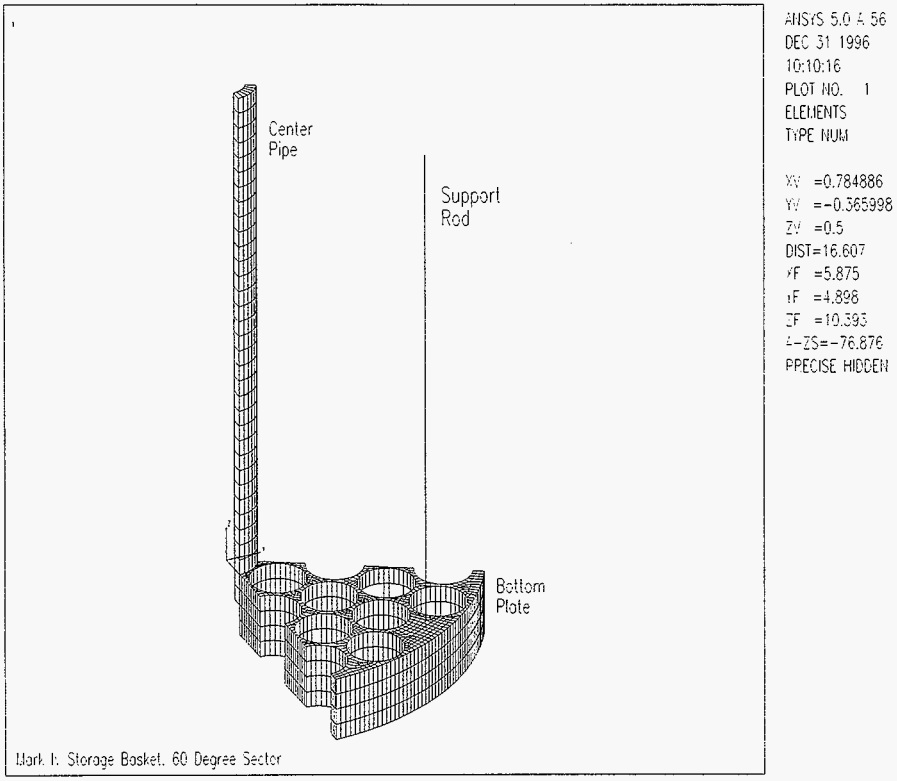

Figure 2. Sixty-Degree Sector Finite Element Model of the Mark IV Storage Basket.

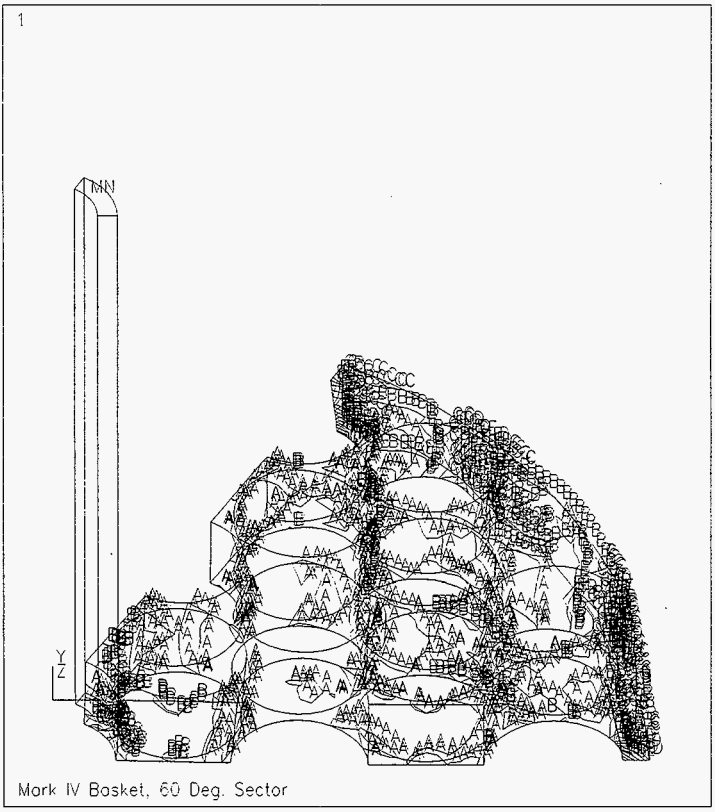

Figure 3. Stress Intensity Contour Plot, Deadweight Stacking Load Condition.

8.5.2 Lifting Load Condition

The Figure 3 ANSYS model was also used for the lifting load case, with boundary condition changes. The only constraint was a vertical constraint at the top of the center pipe (lifting location). The loading included 1.0g gravity loading and the 26.3 psi downward pressure

representing the gravity loading from the fuel. The lifting load results are summarized in the stress intensity plot provided in Figure 4. Note that a maximum stress intensity of about 9 ksi occurred in the bottom of the ligament at the inside radius of the plate. This maximum ligament stress is essentially all primary bending stress and exceeds the allowable lifting stress of 7.0 ksi discussed in Section 6.1.

The inner-most ligaments, per the H-2-827591 drawing, are only 0.085 inches thick. By decreasing the O.D. of the center pipe, the thickness of the inner-most ligaments can be correspondingly increased. The currently specified O.D. of the center pipe is 2.75 in. If the center pipe O.D. is decreased to 2.50 in., the ligament thickness is increased by 1/8-in., resulting in a ligament thickness of 0.210 in. This increased ligament thickness geometry modification was evaluated with the ANSYS model (ANSYS Files: pltlft.inp and pltlft.out). The results are summarized in the Figure 6 contour plot. Note that the maximum stress intensity (5.5 ksi) occurs at a different location than for the thinner ligament model and is less than the 7.01 ksi allowable:

$$\text{Ratio} := \frac{5463}{7010}$$

$$\text{Ratio} = 0.779$$

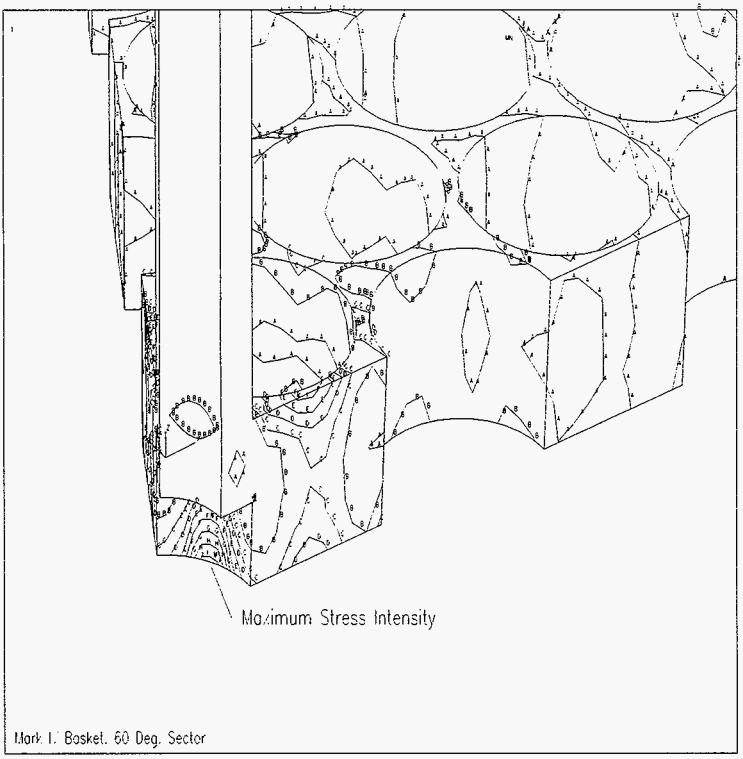

Figure 4. Stress Intensity Contour Plot for an Inside Ligament Thickness of 0.085 in.

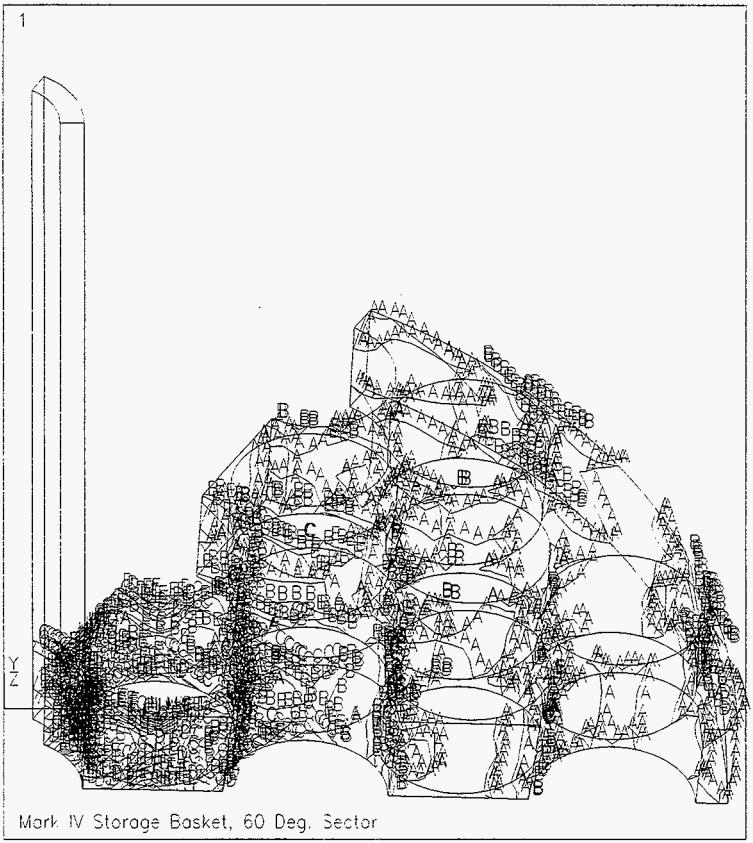

Figure 5. Stress Intensity Contour Plot for an Inside Ligament Thickness of 0.210 in.

8.6 Load Distribution and Basket Interface Considerations

When the baskets are stacked inside the MCO, the center pipe and support rod load distribution is very sensitive to the interface geometry. Reasonable fabrication tolerances will result in an imperfect fit, which will likely result in a three-point contact at the basket interface (three rods or two rods and the center pipe). There is also the possibility that the center pipe will carry the entire load.

Even for the case of a perfect fit, the stack loading will not be evenly shared between the center pipe and rods. Using the Figure 3 ANSYS model, the perfect fit load distribution was calculated by applying the fuel deadweight pressure to the bottom plate, and obtaining the reactions at the support rod and center pipe (ANSYS files: pltld.inp and pltld.out). From the ANSYS output, the support rod and center pipe reactions were 397 lb and 137 lb, respectively (534 lb total). The center pipe load ratio is 137/534 = 0.26. However, for the imperfect fit, the center pipe load ratio could range from zero to one.

In order to establish reasonable tolerances on the basket interface dimensions, capacity force/deflection response predictions were made for both a support rod and the center pipe. By knowing the force/deflection response, the effect of component length differences on the component load sharing can be evaluated. The capacity force/deflection response was obtained using the ANSYS plastic beam element (BEAM23), with large deflections/strain enabled. Buckling was initiated by assuming a 0.25-in. offset of the vertical load.

Assuming the top of the support rod is unrestrained laterally, the predicted support rod force/deflection response is shown in Figure 7 (ANSYS input/output files: rodb.inp/rodb.out). Assuming that three support rods are supporting four baskets above, the force per rod is 4(3177)/3 = 4236 lb. Note, from Figure 7, that a deflection of about 0.070 inches is achieved in a support rod before the load capacity drops below 4236 lb. A less conservative force/deflection rod response was obtained by using a gap/friction element on top of the rod to account for lateral constraint due to friction. Using a conservative friction coefficient of 0.1, the response shown in Figure 8 was obtained (ANSYS input/output files: rodbf.inp/rodbf.out). Note that a much higher capacity and deformation was obtained, when rod frictional constraint was considered.

The force/deflection response of the center pipe was also obtained as shown in Figure 9 (ANSYS input/output files: pipeb.inp/pipeb.out). Assuming that the bottom center pipe carries the full load from the four baskets above, the center pipe loading is 4(3177) = 12,710 lb, as shown in the figure. As indicated in the figure, the center pipe capacity is well in excess of the loading. Also note that with an 1/8-in. center pipe deflection, the plastic buckling mode has not been reached.

The above force/deflection results indicate that tight basket interface tolerances are not necessary. Conservatively using half of the 4236 lb deflection of 0.070 in. from Figure 7, fabrication height differences of 0.035 in., or greater, are acceptable. It appears that the interface fabrication tolerance issue may be controlled by functional, rather than structural considerations. For example, a 0.035 in. height difference between the center pipe and support rods, results in a horizontal tipping distance of about 0.10 in.

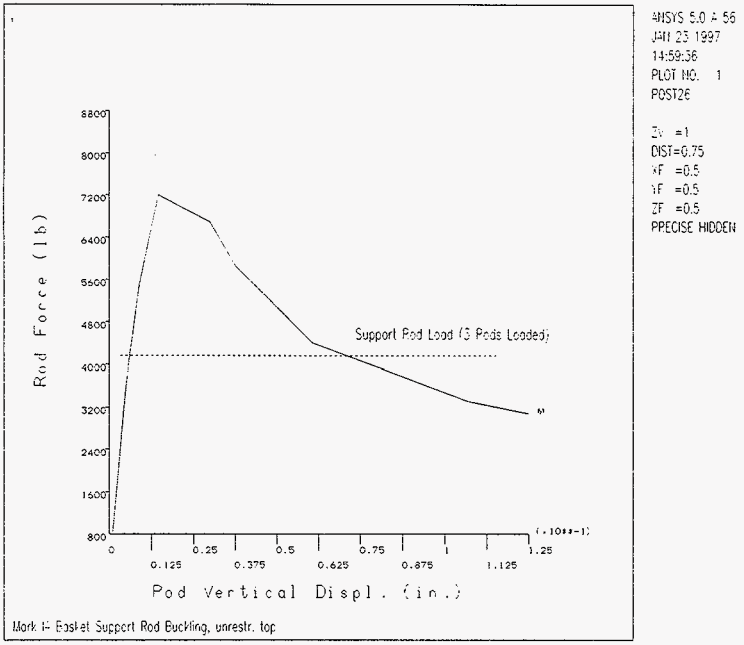

Figure 7. Force/Deflection Response of Support Rod, No Top Constraint.

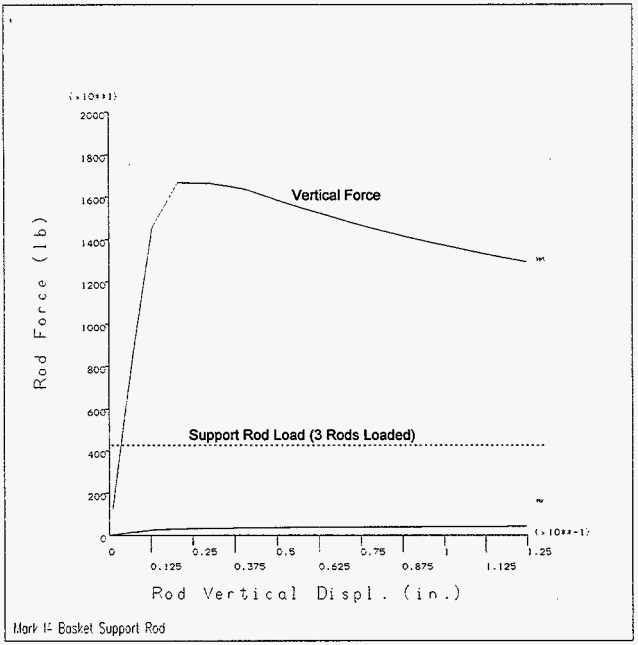

Figure 8. Support Rod Force/Deflection Response w/ Friction Constraint.

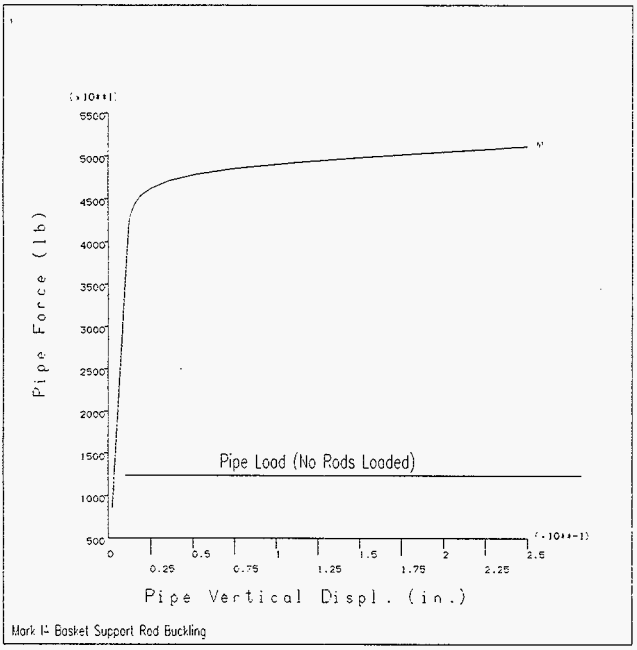

Figure 9. Center Pipe Force/Deflection Response.

8.7 Fillet Weld Finite Element Analysis

As part of the development of the acceptance criteria for the basket fillet welds, a detailed ANSYS model of a 1/4" center pipe/bottom plate fillet weld was generated, as shown in Figure 10. This weld was later changed to a bevel weld, but the ANSYS results for the earlier fillet weld design were retained as part of the justification for the fillet weld acceptance criteria.

The weld was subjected to the dead weight of two baskets (2 x 3177 lb). Using the LPATH and PRSECT ANSYS commands, the membrane and membrane plus bending stress intensity values were obtained for the critical weld section. See fillet.inp and fillet.out for the ANSYS input and output file listings. The ANSYS results indicated a membrane stress intensity of 4005 psi and a membrane plus bending stress intensity of 4938 psi. Since the membrane plus bending was less than 1.5 times the membrane stress, the membrane stress controls, which is limited to nS_m (n = weld quality factor).

Using the throat area of the weld, the estimated membrane stress is

$$P_m := \frac{2 \cdot 3177 \cdot lb}{2.75 \cdot in \cdot \pi \cdot \frac{\sqrt{2}}{2} \cdot 0.25 \cdot in}$$

$$P_m = 4.16 \cdot 10^3 \cdot \frac{lb}{in^2}$$

which is conservative relative to the ANSYS membrane stress prediction of 4005 psi. Thus, based upon the detailed ANSYS analysis, a reasonably conservative approach for the 1/4" fillet weld is to use a stress based upon the weld throat area and a stress limit of nS_m.

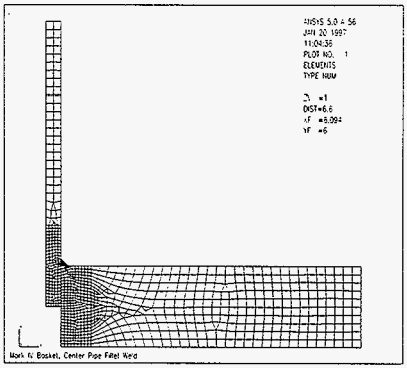

Figure 10. ANSYS Model of a 1/4" Center Pipe/Bottom Plate Fillet Weld.

8.8 Component Stress Results Summary

From the calculations above, a summary of the component stress analysis results was compiled into Table 5. Note that the predicted stresses are below allowables for all components.

Table 5. Summary of Mark IV Basket Structual Evaluation.

Item	Critical Load Condition	Stress Category	Maximum Stress (psi)	Allowable	Ratio
Center Pipe	Dead Weight Stacking	Buckling	3622	5747	0.63
C. Pipe/B. Plate Weld	Dead Weight Stacking	Pm	12,420	13,500	0.92
Support Rod	Dead Weight Stacking	Buckling	1738	1806	0.96
Retaining Bar	Lifting	Maximum Bending Stress	6500	7013	0.93
R. Bar Welds	Dead Weight Stacking	Pure Shear	922	4208	0.22
Support Ring	Dead Weight Stacking	Pb	6675	20,100	0.33
Support Ring Welds	Lifting	Pure Shear	8	4100	0.002
Bottom Plate	Lifting	Pm+Pb	5463	7013	0.78

APPENDIX A

COMPUTER RUN OUTPUT SHEETS

AND

INPUT FILE LISTINGS

COMPUTER RUN COVER SHEET

Project Number:	KH-8009-8
Computer Code:	ANSYS®-PC
Software Version:	5.0A
Computer System:	MS-DOS, Pentium® Processor
Computer Run File Number:	KH-8009-8-06
Unique Computer Run File Name:	Pltstk.inp
Run Description:	Stress Analysis of the Mark IV Storage Basket Stacking Load Condition
Creation Date/Time:	22 January 1997/10:31:40am

Bob V. Winkel 4/18/97

Prepared By: Bob V. Winkel Date

Joe Nichols 4/17/97

Checked By: Joe Nichols Date

LISTING OF PLTSTK.INP FILE

```
/batch,list
/filenam,pltstk
/prep7
/title,Mark IV Basket, 60 Deg. Sector

SIZE = 0.24        ! element size (.24 best mesh)
THICK1= 3.00       ! plate thickness
THICK2= .375       ! center pipe thickness
pressure = 26.1    ! uniform pressure load
OR = 22.625/2      ! plate outside radius
IR = 2.50/2        ! plate inside radius
RR = 21.275/2      ! support rod loca. radius
HI = 24.125        ! height of center pipe/rods
rhole = 2.58/2     ! radius of fuel support hole

/com hole locations - global cartesian
x1 = 2.382
x2 = 4.763
x3 = 7.145
x4 = 9.526

y1 = 0
y2 = 1.3750
y3 = 2.750
y4 = 4.125
y5 = 5.500
y6 = 6.875
y7 = 8.250
y8 = 9.625
*afun,deg          ! use degrees for function input/output

et,1,shell63
et,2,shell63
et,3,beam4    ! 3-d elastic beam
et,4,solid45
et,5,beam4    ! Beam Element for Fuel Rod
et,6,mass21,,,2  ! Mass Element for Fuel Rod

r,1,THICK1
r,2,THICK2
r,3,1.227,.120,.120,1.25 ! Support Rod
r,5,100,1000,1000,2      ! Rigid Fuel Element
r,6,55.4    ! Mass of Fuel Element
r,7,.27.7   ! Fuel Ele. Mass on Symmetry Axis (Half Mass)

dens,1,.2854
ex,1,26.5E+06
nuxy,1,.3

/com define bottom plate
csys,1      ! global cylindrical
k,10,0,0
k,1,IR,0
```

```
k,2,OR,0
k,3,OR,30
k,4,RR,30
k,5,IR,30

l,1,2          ! line 1
larc,2,3,10,OR    ! line 2
l,3,4          ! line 3
l,4,5          ! line 4
larc,5,1,10,IR    ! line 5
lesize,5,,5       ! 5 degree segments for inside arc

/com area 1 = bottom plate
al,1,2,3,4,5

/com define center pipe
k,20,0,0,HI
k,21,IR,0, HI
k,25,IR,30,HI
larc,25,21,20,IR  ! line 6
lesize,6,,10      ! 5 degree segments for inside arc
k,26,0,0,-1.5
k,27,IR,0.,-1.5
k,28,IR,30,-1.5
larc,28,27,26,IR  ! line 7 @ bottom end of center pipe
lesize,7,,10
l,27,21           ! vertical line (8) at 0 degrees
l,28,25           ! vertical line (9) at 30 degrees
/com area 2 = center pipe
al,6,7,8,9

/com define support rod
k,30,RR,30,HI
l,4,30         ! vertical line (10) at 30 degrees
lesize,10,,,4

/com define holes in bottom plate
wplane,,x4,y1
pcirc,rhole       ! area 3
wplane,,x4,y3
pcirc,rhole       ! area 4
wplane,,x3,y2
pcirc,rhole       ! area 5
wplane,,x3,y4
pcirc,rhole       ! area 6
wplane,,x2,y1
pcirc,rhole       ! area 7
wplane,,x2,y3
pcirc,rhole       ! area 8
wplane,,x1,y2
pcirc,rhole       ! area 9
wplane,,defa              !Set working plane to default
wpstyle                   !To remove triad (toggles)
/com subtract holes from bottom plate
boptn,yes      !To save areas
asba, 1,3
```

```
asba,10,4     !A10 created from previous subtraction
asba,11,5     !A11 created from prev. subtr.
asba,12,6
asba,13,7
asba,14,8
asba,15,9     ! bottom plate is now area 16
adele,1
adele,3,15

/com mesh areas (30 degrees)

/com bottom plate
esize,SIZE
mat,1
real,1
amesh,16

/com center pipe
esize,THICK1/4
type,2
real,2
amesh,2

/com repeat mesh to obtain 60 degree model
csys
clocal,11,,,,,30
arsym,y,2,16,14

/com nodes in cylindrical coordinates
csys,1
nrotat,all

/com support rod
type,3
real,3
lmesh,10

/com generate solid elements
type,4
esize,,4      !esize = 4 for final model

/com bottom plate extrusion
vext,3,,,,,-3
vext,16,,,,,-3

/com center pipe extrusion
esize,,.75
vext,1,2,,-THICK2

/com remove shell elements
asel,all
asel,s,type,,2
aclear,all
asel,all
asel,s,type,,1
aclear,all
```

```
csys,0

/com rotate all nodes into cyl. coord. system and merge
csys,1
nrotate,all
nummerg,all

/com constrain edges of plate (60 deg. symm.)
nsel,s,loc,y,0
csys,1
nrotat,all
d,all,uy,
nsel,all
nsel,s,loc,y,60
csys,1
nrotat,all
d,all,uy
nsel,all

/com axial constrain @ center pipe support
nsel,s,loc,x,IR
nsel,r,loc,z,-3
d,all,uz
nall

/com axial constraint @ support rods underneath
csys,1
nsel,s,loc,z,-3
nsel,r,loc,y,0,2
nsel,r,loc,x,OR-1,OR
d,all,uz
nall
nsel,s,loc,z,-3
nsel,r,loc,y,58,60
nsel,r,loc,x,OR-1,OR
d,all,uz
nall

/com couple nodes adjacent to rod support
nsel,s,loc,z,0
nsel,r,loc,y,28,32
nsel,r,loc,x,RR-.3,RR+.3
cp,1,uz,all
nall

/com constrain rota. dof @ rod connection
csys
dk,4,rotx,,,,roty,rotz
sbctran
fini

/solu
/com fuel loading (pressure), sup. rod (3 baskets above) & acel
asel,s,loc,z,0
sfa,all,,pres,pressure    ! fuel pressure
asel,all
```

```
f,1005,fz,-1588
acel,,,1.0    ! 1 g vertical
solve
save
fini

/post1
/WIN,1,SQUARE
/ANGLE,  1,-30 ,XS,1
/show,graphics,pic,1
eplot
/edge,,1
set,last
plnsol,s,int
/show,vga
fini

/exit
```

COMPUTER RUN COVER SHEET

Project Number:	KH-8009-8
Computer Code:	ANSYS®-PC
Software Version:	5.0A
Computer System:	MS-DOS, Pentium® Processor
Computer Run File Number:	KH-8009-8-06
Unique Computer Run File Name:	Pltstk.out
Run Description:	Stress Analysis of the Mark IV Storage Basket Stacking Load Condition
Run Date/Time:	22 January 1997/4:52:30pm

Bob V. Winkel 4/17/97

Prepared By: Bob V. Winkel Date

Joe Nichols 4/17/97

Checked By: Joe Nichols Date

COMPUTER RUN COVER SHEET

Project Number:	KH-8009-8
Computer Code:	ANSYS®-PC
Software Version:	5.0A
Computer System:	MS-DOS, Pentium® Processor
Computer Run File Number:	KH-8009-8-06
Unique Computer Run File Name:	Pltlft.inp
Run Description:	Stress Analysis of the Mark IV Storage Basket Stacking Load Condition
Creation Date/Time:	22 January 1997/2:43:56pm

Bob V. Winkel 4/18/97

Prepared By: Bob V. Winkel Date

Checked By: Joe Nichols 4/17/97

Date

LISTING OF PLTLFT.INP FILE

```
/batch,list
/filenam,pltlft
/prep7
/title,Mark IV Storage Basket, 60 Deg. Sector

SIZE = 0.24        ! element size (.24 best mesh)
THICK1= 3.00       ! plate thickness
THICK2= .375       ! center pipe thickness
pressure = 26.1    ! uniform pressure load
OR = 22.625/2      ! plate outside radius
IR = 2.50/2        ! plate inside radius
RR = 21.275/2      ! support rod loca. radius
HI = 23.785        ! height of center pipe/rods
rhole = 2.58/2     ! radius of fuel support hole

/com hole locations - global cartesian
x1 = 2.382
x2 = 4.763
x3 = 7.145
x4 = 9.526

y1 = 0
y2 = 1.3750
y3 = 2.750
y4 = 4.125
y5 = 5.500
y6 = 6.875
y7 = 8.250
y8 = 9.625
*afun,deg          ! use degrees for function input/output

et,1,shell63
et,2,shell63
et,3,beam4    ! 3-d elastic beam
et,4,solid45  ! Bottom Plate
et,5,beam4    ! Beam Element for Fuel Rod
et,6,solid45  ! Center Pipe

r,1,THICK1
r,2,THICK2
r,3,1.227,.120,.120,1.25 ! Support Rod

dens,1,.2854
ex,1,26.5E+06
nuxy,1,.3

/com define bottom plate
csys,1      ! global cylindrical
k,10,0,0
k,1,IR,0
k,2,OR,0
k,3,OR,30
k,4,RR,30
```

```
k,5,IR,30

l,1,2          ! line 1
larc,2,3,10,OR    ! line 2
l,3,4          ! line 3
l,4,5          ! line 4
larc,5,1,10,IR    ! line 5
lesize,5,,5       ! 5 degree segments for inside arc

/com area 1 = bottom plate
al,1,2,3,4,5

/com define center pipe
k,20,0,0,HI
k,21,IR,0, HI
k,25,IR,30,HI
larc,25,21,20,IR  ! line 6
lesize,6,,5       ! 5 degree segments for inside arc
k,26,0,0,-1.5
k,27,IR,0.,-1.5
k,28,IR,30,-1.5
larc,28,27,26,IR  ! line 7 @ bottom end of center pipe
lesize,7,,5
l,27,21           ! vertical line (8) at 0 degrees
l,28,25           ! vertical line (9) at 30 degrees
lesize,8,.750
lesize,9,.750
/com area 2 = center pipe
al,6,7,8,9

/com define support rod
k,30,RR,30,HI
l,4,30         ! vertical line (10) at 30 degrees
lesize,10,,,4

/com define holes in bottom plate
wplane,,x4,y1
pcirc,rhole       ! area 3
wplane,,x4,y3
pcirc,rhole       ! area 4
wplane,,x3,y2
pcirc,rhole       ! area 5
wplane,,x3,y4
pcirc,rhole       ! area 6
wplane,,x2,y1
pcirc,rhole       ! area 7
wplane,,x2,y3
pcirc,rhole       ! area 8
wplane,,x1,y2
pcirc,rhole       ! area 9
wplane,,defa              !Set working plane to default
wpstyle                   !To remove triad (toggles)
/com subtract holes from bottom plate
boptn,yes      !To save areas
asba, 1,3
asba,10,4      !A10 created from previous subtraction
```

```
asba,11,5      !A11 created from prev. subtr.
asba,12,6
asba,13,7
asba,14,8
asba,15,9      ! bottom plate is now area 16
adele,1
adele,3,15

/com mesh areas (30 degrees)

/com bottom plate
esize,SIZE
mat,1
real,1
amesh,16

/com center pipe
type,2
real,2
amesh,2

/com repeat mesh to obtain 60 degree model
csys
clocal,11,,,,,30
arsym,y,2,16,14

/com nodes in cylindrical coordinates
csys,1
nrotat,all

/com support rod
type,3
real,3
lmesh,10

/com generate solid elements
type,4
esize,,4       !esize = 4 for final model

/com bottom plate extrusion
vext,3,,,,,-3
vext,16,,,,,-3

/com center pipe extrusion
type,6
esize,,2
vext,1,2,,-THICK2

/com remove shell elements
asel,all
asel,s,type,,2
aclear,all
asel,all
asel,s,type,,1
aclear,all
csys,0
```

```
/com merge nodes
csys,1
esel,s,type,,4
nsle,s
nummerg,node,.02    ! merge bottom plate nodes
esel,s,type,,6
nsle,s
nummerg,node,.02    ! merge center pipe nodes
nall
eall
nsel,s,loc,x,1.24,1.26
nsel,r,loc,z,-.1,0.1
nummerg,node,.02    ! connect pipe/plate @ top of plate only (conservative)
nall

/com constrain edges of plate (60 deg. symm.)
nsel,s,loc,y,0
csys,1
nrotat,all
d,all,uy,
nsel,all
nsel,s,loc,y,60
csys,1
nrotat,all
d,all,uy
nsel,all

/com axial constraint
nsel,s,loc,z,HI
nsel,r,loc,x,0,IR+.1
d,all,uz
nsel,all

/com constrain rota. dof @ rod connection
csys
dk,4,rotx,,,,roty,rotz
sbctran
fini

/solu
/com fuel loading (pressure), sup. rod (3 baskets above) & acel
asel,s,loc,z,0
sfa,all,,pres,pressure    ! fuel pressure
asel,all
acel,,,1.0    ! 1 g vertical
solve
save
fini

/post1
/WIN,1,SQUARE
/ZOOM,,OFF
/ANGLE,  1,-30 ,XS,1
/show,graphics,pic,1
eplot
```

```
/edge,,1
set,last
plnsol,s,int
/show,vga
fini
/exit
```

COMPUTER RUN COVER SHEET

Project Number:	KH-8009-8
Computer Code:	ANSYS®-PC
Software Version:	5.0A
Computer System:	MS-DOS, Pentium® Processor
Computer Run File Number:	KH-8009-8-06
Unique Computer Run File Name:	Pltlft.out
Run Description:	Stress Analysis of the Mark IV Storage Basket Stacking Load Condition
Run Date/Time:	22 January 1997/3:15:30pm

Bob V. Winkel 4/18/97

Prepared By: Bob V. Winkel Date

Joe Nichols 4/17/97

Checked By: Joe Nichols Date

COMPUTER RUN COVER SHEET

Project Number:	KH-8009-8
Computer Code:	ANSYS®-PC
Software Version:	5.0A
Computer System:	MS-DOS, Pentium® Processor
Computer Run File Number:	KH-8009-8-06
Unique Computer Run File Name:	Rodb.inp
Run Description:	Stress Analysis of the Mark IV Storage Basket Stacking Load Condition
Creation Date/Time:	23 January 1997/1:38:20pm

Bob V. Winkel 4/18/97

Prepared By: Bob V. Winkel Date

Checked By: Joe Nichols 4/17/97 Date

LISTING OF RODB.INP FILE

```
/batch,list
/filenam,rodb
/prep7
/title,Mark IA Basket Support Rod Buckling

et,1,beam23,,,,,4
!et,1,beam23
et,2,beam23
et,3,contac12

r,1,2.874,1.34,6.384,3.072,2.916,1.897,2.816
!r,1,2.874,.430,1.34
r,2,10,83.333,10
r,3,0,1e6,,1.0

dens,1,.2854
ex,1,27.6E+06
nuxy,1,.3
tb,bkin,1,2
tbtemp,0
tbdata,1,17.6e3,0.9e6
tbtemp,200
tbdata,1,17.6e3,0.9e6

dens,2,.2854
ex,2,27.6E+06
nuxy,2,.3
tb,bkin,2,2
tbtemp,0
tbdata,1,17.6e6,0.9e6
tbtemp,200
tbdata,1,17.6e6,0.9e6
mu,2,0.1     ! Rod/basket friction coefficient

n,1,
n,21,0,22.318
fill,1,21
n,22,-.25,22.318
n,23,-.25,23
type,1
real,1
e,1,2
egen,20,1,1
type,2
mat,2
real,2
e,21,22
type,3
mat,2
real,3
e,22,23

eplot
```

```
/com Boundary Conditions
d,1,all
d,23,all
fini

/solu
autots,on
nlgeom,on
d,23,uy,-0.012   ! Initial Displacement
cnvtol,f,,.005
cnvtol,m,-1

time,1
nsubst,1
outpr,basic,1
lswrite,1
time,2
d,23,uy,-.100
nsubst,2000
outres,all,2
outpr,basic,10
lswrite,2
time,3
nsubst,2000
d,23,uy,-.2
lssolve,1,2
fini

/post26
NSOL,2,22,U,Y,uy22
RFORCE,3,1,F,Y,fy1
prvar,2,3
ADD,4,2,,,,,-1
xvar,4
/AXLAB,X,Rod Vertical Displ. (in.)
/AXLAB,Y,Rod Force (lb)
!/show,graphics,pic,1
plvar,3
```

COMPUTER RUN COVER SHEET

Project Number:	KH-8009-8
Computer Code:	ANSYS®-PC
Software Version:	5.0A
Computer System:	MS-DOS, Pentium® Processor
Computer Run File Number:	KH-8009-8-06
Unique Computer Run File Name:	Rodb.out
Run Description:	Stress Analysis of the Mark IV Storage Basket Stacking Load Condition
Run Date/Time:	23 January 1997/1:40:26pm

Bob V. Winkel 4/18/97

Prepared By: Bob V. Winkel Date

Joe Nichols 4/17/97

Checked By: Joe Nichols Date

COMPUTER RUN COVER SHEET

Project Number:	KH-8009-8
Computer Code:	ANSYS®-PC
Software Version:	5.0A
Computer System:	MS-DOS, Pentium® Processor
Computer Run File Number:	KH-8009-8-06
Unique Computer Run File Name:	Rodbf.inp
Run Description:	Stress Analysis of the Mark IV Storage Basket Stacking Load Condition
Creation Date/Time:	23 January 1997/4:15:56pm

Bob V. Winkel 4/18/97

Prepared By: Bob V. Winkel Date

Joe Nichols 4/17/97

Checked By: Joe Nichols Date

LISTING OF RODBF.INP FILE

```
/batch,list
/filenam,rodbf
/prep7
/title,Mark IA Basket Support Rod Buckling, unrestr. top

et,1,beam23,,,,,,2
et,2,contac12

r,1,1.25
r,2,10.
r,3,0,1e8,,1.0

dens,1,.2854
ex,1,27.6E+06
nuxy,1,.3
tb,bkin,1,2
tbtemp,0
tbdata,1,21.3e3,0.3e6
tbtemp,200
tbdata,1,21.3e3,0.3e6

mu,2,0.1     ! Rod/basket friction coefficient

n,1,
n,21,0,24.125
fill,1,21
n,22,-.25,24.125     ! 1/4" offset
!n,23,-.25,25.

type,1
real,1
e,1,2
egen,20,1,1
real,2
e,21,22    ! rigid link for load offset

type,2
mat,2
real,3
!e,22,23

eplot

/com Boundary Conditions
d,1,all
fini

/solu
/com Apply displ. in y direction
d,22,uy,-.005
neqit,50
autots,on
nlgeom,on
```

```
cnvtol,f,,.01
cnvtol,m,-1
time,1
nsubst,10
outpr,basic,10
lswrite,1

time,2
d,22,uy,-.125
nsubst,1000
outres,all,2
outpr,basic,10
lswrite,2
lssolve,1,2
fini

/post26
NSOL,2,22,U,Y,uy22
RFORCE,3,1,F,Y,fy1
prvar,2,3
ADD,4,2,,,,,,-1
xvar,4
/AXLAB,X,Rod Vertical Displ. (in.)
/AXLAB,Y,Rod Force (lb)
/show,graphics,pic,1
plvar,3
fini
/exit
```

COMPUTER RUN COVER SHEET

Project Number:	KH-8009-8
Computer Code:	ANSYS®-PC
Software Version:	5.0A
Computer System:	MS-DOS, Pentium® Processor
Computer Run File Number:	KH-8009-8-06
Unique Computer Run File Name:	Rodbf.out
Run Description:	Stress Analysis of the Mark IV Storage Basket Stacking Load Condition
Run Date/Time:	23 January 1997/4:17:06pm

Bob V. Winkel 4/18/97

Prepared By: Bob V. Winkel Date

Joe Nichols 4/17/97

Checked By: Joe Nichols Date

REVISION	0				PAGE 64
PREPARED BY / DATE	BV 4/17/97				OF 68
CHECKED BY / DATE	JN 4/17/97				

COMPUTER RUN COVER SHEET

Project Number:	KH-8009-8
Computer Code:	ANSYS®-PC
Software Version:	5.0A
Computer System:	MS-DOS, Pentium® Processor
Computer Run File Number:	KH-8009-8-06
Unique Computer Run File Name:	Weld.inp
Run Description:	Stress Analysis of the Mark IV Storage Basket Stacking Load Condition
Creation Date/Time:	27 January 1997/8:36:28am

Bob V. Winkel 4/18/97

Prepared By: Bob V. Winkel Date

Joe Nichols 4/17/97

Checked By: Joe Nichols Date

LISTING OF WELD.INP FILE

```
/batch,list
/filenam,fillet
/prep7
/title,Mark IV Basket, Center Pipe Fillet Weld

THICK1= 3.00        ! plate thickness
THICK2= .500        ! center pipe thickness
OR = 22.625/2       ! plate outside radius
IR = 2.50/2         ! plate inside radius
fsize = 0.125       ! fillet weld size

et,1,plane42,,,1

dens,1,.2854
ex,1,26.5E+06
nuxy,1,.3

/com Define Area Keypoints
k,1,IR,0
k,2,OR,0
k,3,OR,3
k,4,IR,3
k,5,IR,1.75
k,6,IR,1.75 - fsize
k,7,1.375,3
k,8,1.375,3 + fsize
k,9,IR - .5,1.75
k,10,IR - .5,12
k,11,1.375,12
k,12,IR - fsize,1.75
k,13,IR + 1,0
k,14,IR + 1,3
k,15,IR - .5,4.5
k,16,1.375,4.5
k,17,IR,2
k,18,IR,1.75

/com Define Areas
A,13,2,3,14
A,1,13,14,7,4,17,5,6
A,9,12,18,4,8,16,15
A,4,7,8
A,15,16,11,10

/com Develop Mesh
esize,.02
amesh,4
esize,.08
amesh,2,3
esize,.3
amesh,1
amesh,5
save
```

```
fini

/solu
/com Vertical Constraint at Top of Center Pipe
nsel,s,loc,y,12
d,all,uy
nall
/com Pressure Load on Bottom Plate
nsel,s,loc,y,3
nsel,r,loc,x,1.375,15
sf,all,pres,8.017
nall
solve
save
fini

/post1
set,last
/WIN,1,SQUARE
/show,graphics,pic,1
EPLOT
/ZOOM, 1, 1.8250 , 2.9745 , 0.00000E+00, 1.4232
/EDGE,,1
PLNSOL,S ,INT
lpath,2,10
prsect
/show,vga
fini
/exit
```

COMPUTER RUN COVER SHEET

Project Number:	KH-8009-8
Computer Code:	ANSYS®-PC
Software Version:	5.0A
Computer System:	MS-DOS, Pentium® Processor
Computer Run File Number:	KH-8009-8-06
Unique Computer Run File Name:	Weld.out
Run Description:	Stress Analysis of the Mark IV Storage Basket Stacking Load Condition
Run Date/Time:	27 January 1997/8:18:24am

Bob V. Winkel 4/18/97

Prepared By: Bob V. Winkel Date

Joe Nichols 4/17/97

Checked By: Joe Nichols Date

PARSONS	CALCULATION PACKAGE	FILE NO: KH-8009-8-07 DOC. NO: HNF-SD-SNF-DR-003, Rev. 0, Appendix 9 PAGE 1 of 52

PROJECT NAME:	CLIENT:
MCO Final Design	Duke Engineering & Services Hanford, Inc.

CALCULATION TITLE:

STRESS ANALYSIS OF THE MARK IV SCRAP BASKET

PROBLEM STATEMENT OR OBJECTIVE OF CALCULATION:

PERFORM A STRESS ANALYSIS OF THE MARK IV SCRAP BASKET IN ACCORDANCE WITH REVISION 2 OF THE MCO PERFORMANCE SPECIFICATION. TWO LOADS ARE CONSIDERED:

1. LIFTING
2. DEADWEIGHT

CRITERIA ARE BASED ON ANSI N14.6 AND THE ASME CODE.

QA Forms 4/18/97

DOCUMENT REVISION	AFFECTED PAGES	REVISION DESCRIPTION	PREPARED BY INITIALS / DATE	CHECKED BY INITIALS / DATE	APPROVED BY INITIALS / DATE
0	1-52	Initial Issue	Bob Winkel Bob Winkel BW 4/18/97	Joe Nichols Joe Nichols JN 4/17/97	Charles Temus Charles Temus 4/18/97

CONTENTS

CONTENTS 3

LIST OF TABLES 5

LIST OF FIGURES 6

1. INTRODUCTION 8

2. REFERENCES 8

3. ASSUMPTIONS 8

4. GEOMETRY 9

5. MATERIAL PROPERTIES 11

6. ACCEPTANCE CRITERIA 12

6.1 Lifting Loads 12

6.2 Deadweight Loads 12

7. LOAD CONDITIONS & COMBINATIONS 16

8. STRESS ANALYSIS - HAND CALCULATIONS 17

8.1 Center Pipe 17

8.2 Bottom Plate 18

8.3 Center Pipe to Coupling Pipe and Coupling Pipe to Bottom Plate Welds 20

8.4 Stiffener Plate to Bottom Plate Welds 21

8.5 Stiffener Plate to Center Pipe Weld 22

8.6 Stiffener Plate to Outer (Shell) Plate Weld 23

8.7 Outer (Shell) Plate to Bottom Plate Weld 23

9. ANSYS ANALYSIS 25

9.1 Stress Analysis 25

LIST OF TABLES

	Page
TABLE 1 MARK IV SCRAP BASKET GEOMETRY	9
TABLE 2 ASME CODE MATERIAL PROPERTIES FOR TYPE 304L STAINLESS STEEL	11
TABLE 3 ALLOWABLE STRESSES - DEADWEIGHT	13
TABLE 4 WELD CRITERIA - DEADWEIGHT	16
TABLE 5 ANSYS MODEL WEIGHT	26
TABLE 6 EVALUATION OF STIFFENER TO BOTTOM PLATE WELD USING ANSYS RESULTS	29
TABLE 7 EVALUATION OF STIFFENER TO CENTER PIPE WELD USING ANSYS RESULTS	30
TABLE 8 EVALUATION OF STIFFENER TO OUTER (SHELL) PLATE WELD USING ANSYS RESULTS	31
TABLE 9 EVALUATION OF CENTER PIPE TO BOTTOM PLATE WELD USING ANSYS RESULTS	32
TABLE 10 EVALUATION OF OUTER SHELL TO BOTTOM PLATE WELD USING ANSYS RESULTS	33
TABLE 11 ANSYS RESULTS - DEADWEIGHT ALLOWABLES	34
TABLE 12 ANSYS RESULTS - LIFTING ALLOWABLES	35

LIST OF FIGURES

	Page
FIGURE 1 ANSYS MODEL	36
FIGURE 2 BOUNDARY CONDITIONS	37
FIGURE 3 BOUNDARY CONDITIONS- TOP VIEW	38
FIGURE 4 STRESS INTENSITY	39
FIGURE 5 STRESS INTENSITY IN BOTTOM PLATE	40
FIGURE 6 STRESS INTENSITY IN CENTER PIPE	41
FIGURE 7 STRESS INTENSITY IN CENTER PIPE AT STIFFENER PLATE CONNECTION	42
FIGURE 8 STRESS INTENSITY IN OUTER (SHELL) PLATE	43
FIGURE 9 STRESS INTENSITY IN STIFFENER PLATE	44

LIST OF APPENDICES

APPENDIX A 45

1. INTRODUCTION

This calculation documents the evaluation of the Mark IV scrap basket for lifting and deadweight loads. The evaluations are performed based on the criteria of the ASME Code and ANSI N14.6. A combination of hand calculations and ANSYS analysis is used.

2. REFERENCES

1. "Performance Specification for the Spent Nuclear Fuel Multi-Canister Overpack," Specification HNF-S-0426, Revision 3, February 1996.

2. "K-Basin Spent Nuclear Fuel Scrap Basket", Prepared for U.S.D.O.E. (Richland Operations) by DE&S Hanford, Drawing Number H-2-828075, Revsion C.

3. ASME Boiler and Pressure Vessel Code, Section II - Materials, Part D - Properties, 1995 Edition with 1995 Addenda.

4. ASME Boiler and Pressure Vessel Code, Section III, Subsection NG, "Core Support Structures", 1995 Edition with 1995 Addenda.

5. ASME Boiler and Pressure Vessel Code, Section III, Subsection NF, "Component Supports", 1995 Edition with 1995 Addenda.

6. "American National Standard for Radioactive Materials - Special Lifting Devices for Shipping Containers Weighing 10000 Pounds (4500 kg) or More", ANSI N14.6-1993, American National Standards Institute, New York.

7. Roark, Raymond J., & Young, Warren C., "Formulas for Stress and Strain", 5th Edition, McGraw-Hill Book Company, New York, 1975.

8. AISC, 1989, *Manual of Steel Construction, Ninth Edition,* American Institute of Steel Construction, Chicago, Illinois

3. ASSUMPTIONS

1. All welds are made in accordance with NG-4000 and are inspected in accordance with NG 5260.

3. Others as noted

4. GEOMETRY

The primary structural components of the Mark IV scrap basket, as defined in the Reference 2 drawing, are as listed in Table 1:

Table 1
Mark IV Scrap Basket Geometry

Component	Description
Center Pipe	Tubular Section with Outside diameter of 2.75 inches and a nominal wall thickness of 0.50". Section Properties are: $A = \frac{\pi}{4}\left(OD^2 - ID^2\right)$ $= \frac{\pi}{4}\left((2.75\,in)^2 - (1.75\,in)^2\right)$ $= 3.53\,in^2$ $I = \frac{\pi}{64}\left(OD^4 - ID^4\right)$ $= \frac{\pi}{64}\left((2.75\,in)^4 - (1.75\,in)^4\right)$ $= 2.35\,in^4$ $r = \sqrt{I/A}$ $= \sqrt{2.35\,in^4 / 3.53\,in^2}$ $= .815\,in$
Bottom Plate	The bottom plate is a 1/4" thick plate with 1/4" diameter holes on a 1-1/2 triangular pitch.

Outer (Shell) Plate	The outer shell plate is 12 gage sheet metal (.109" thick). The OD of the shell is 22.50 inches. Other section properties are: $ID = OD - 2t$ $= 22.50\,in - 2(.109\,in)$ $= 22.28\,in$ $IR = ID/2$ $= 11.14\,in$ $A = \frac{\pi}{4}\left(OD^2 - ID^2\right)$ $= \frac{\pi}{4}\left((22.50\,in)^2 - (22.28\,in)^2\right)$ $= 7.74\,in^2$
Stiffener Plates	There are 6 radial stiffener plates connecting the center pipe to the bottom plate and the shell plate. The stiffener plates are 10 gage (.109") thick stainless steel.
Center Pipe to Coupling Ring Weld	The center pipe to coupling ring weld is specified as a continuous 1/4" fillet weld.
Coupling Ring to Bottom Plate Weld	The center pipe to coupling ring weld is specified as a continuous 1/4" fillet weld.
Outer (Shell) Plate to Bottom Plate Weld	The shell plate to bottom plate weld is specified as a continuous butt weld.
Stiffener Plate to Center Pipe Weld	The stiffener plate to center pipe weld(s) is specified as a double sided intermittent 0.109" fillet weld, 2" welds on 4.43" centers.
Stiffener Plate to Outer (Shell) Plate Weld	The stiffener plate to outer plate weld(s) is specified as a double sided intermittent 0.109" fillet weld, 2" welds on 4.43" centers.
Stiffener Plate to Bottom Plate Weld	The stiffener plate to bottom plate weld(s) is specified as a double sided 1/16" fillet weld (2" on 4" centers).

5. MATERIAL PROPERTIES

The Mark IV scrap basket may be fabricated from Type 304L or Type 304 stainless steel. Only Type 304L material properties are used in this analysis to preserve conservatism.

For this analysis, only elastic modulus and allowable stress values are needed. Values are taken from Section II, Part D of the Code (See [3]) and are listed in Table 2.

Table 2
ASME Code Material Properties for Type 304L Stainless Steel

Temperature °F	Temperature °C	E ble TM-1, Group	S_m Table 2A, p.322	S_y Table Y-1, p.524	S_u Table U, P. 441
-20	--	--	16.7 ksi	25.0 ksi	70.0 ksi
70	--	28.3E+06	--	--	--
100	--	--	16.7 ksi	25.0 ksi	70.0 ksi
200	--	27.6E+06	16.7 ksi	21.3 ksi	66.2 ksi
212	100	27.5E+06	16.7 ksi	21.0 ksi	65.6 ksi
300	--	27.0E+06	16.7 ksi	19.1 ksi	60.9 ksi
700	--	24.8E+06	13.5 ksi	14.9 ksi	56.2 ksi
707	375	24.8E+06	13.5 ksi	14.9 ksi	56.2 ksi
750	--	--	13.3 ksi	14.7 ksi	55.9 ksi
800		24.1E+06	--	--	--

s4allow.xls

Notes 1: Underlined values determined by linear interpolation, all other values taken from Section II, Part D of the ASME Code.
2: Value of E taken from Table TM-1 for Material Group G.

6. ACCEPTANCE CRITERIA

This calculation considers (1) lifting loads and (2) deadweight loads. Criteria for each are described below

6.1 Lifting Loads

Per Section 4.12.3 of the MCO Specification (See [1]), the basket design is "shall meet the safety factors required by the American National Standards Institute (ANSI) N14.6-1986. THE ANSI safety factors apply from 5°C to 100°C." For nonessential lifts, Section 4.2.1.1 of N14.6 (See [6]) establishes factors safety of 3 against yield stress and 5 against tensile stress. Thus criteria of N14.6 is equivalent to an allowable stress of the lesser of $S_y/3$ or $S_u/5$. At the maximum lifting temperature of 100°C, the allowables are:

$$\frac{S_y}{3} = \frac{25.0\ ksi}{3} = 8.33\ ksi$$
$$\frac{S_u}{5} = \frac{70.0\ ksi}{5} = 14.00\ ksi$$
$$\Rightarrow use: P_m + P_b \le 8.33 ksi$$

6.2 Deadweight Loads

Per Section 4.12.3 of [1], all baskets must be able to support the fuel at 1.0g while at 375°C. The specification does not provide criteria for the Mark IV baskets under these loads, thus the normal (Level A) condition criteria of Subsection NG will be used. As described in the following paragraphs, the criteria of NG is supplemented by the criteria of Subsection NF for the center pipe. For membrane and membrane plus bending stresses the allowable stresses of Table 3 are applied.

The scrap baskets may be located at the top or the bottom of the MCO. Thus, in addition to self weight, the Mark IV scrap basket must be able to support the weight of 4 additional baskets. Under these compressive loads, stability of the basket must be evaluated.

Table 3
Allowable Stresses - Deadweight

Temperature °F	Temperature °C	S_m [Table 2]	Design/Level A Stress Limits P_m (S_m)	P_L (1.5 S_m)	(P_m or P_L) + P_b (1.5 S_m)
212	100	16.7 ksi	16.7 ksi	25.1 ksi	25.1 ksi
707	375	13.5 ksi	13.5 ksi	20.3 ksi	20.3 ksi

s4allow.xls

Notes 1: Design & Level A Stress Limits from NG-3221 & NG-3222, respectively.

2: Axial compressive stresses must be limited to values established in accordance with one of the following:

- NG-3133.3 (external pressure)
- NG-3133.6 (axial compression on cylindrical shells)
- NF-3322.1(c) (column type members)
- Code Case N-284 (shell structures)

6.2.1 Outer Shell

6.2.1.1 Shell Buckling

The shell buckling allowable for the outer shell is determined in the following steps using NG-3133.6. Note that NG-3133.6 assumes that both the top and bottom edges of the shell are constrained by stiffening rings and/or vessel heads. This constraint is not provided at the top of the basket (although the radial stiffeners do provide intermittent support).

1. Determine the factor A using a value of 11.14 inches for the shell inside radius (See Table 1 for dimensions):

$$A = \frac{.125}{R/t}$$

$$= \frac{.125}{11.14\ in/0.109\ in} = 0.0012$$

2. From the ASME Code, Section II, Part D, Figure HA-3 for Type 304L stainless steel at 375°C, the allowable compressive stress is equal to Factor B:

$$B = 4100\ psi$$

6.2.1.2 Panel Buckling

Critical load will be investigated using Table 35, Case 13 of [7]. Each 60° segment of the basket is modeled as a curved panel with a uniform compression load on the curved edges. This formulation does not include the safety factors built into the Code equations.

$$\sigma = \frac{1}{6} \cdot \frac{E}{1-\nu^2} \cdot \left[\sqrt{12\left(1-\nu^2\right)\left(\frac{t}{r}\right)^2 + \left(\frac{\pi t}{b}\right)^4} + \left(\frac{\pi t}{b}\right)^2 \right]$$

Terms in this equation are:

$r = radius, use\ OR\ of\ 11.25\ in$

$a = panel\ height = 26.85\ in$

$b = arc\ length$

$= \alpha \cdot OR = 60°\left(\frac{\pi}{180°}\right)11.25\ in$,

$= 11.78\ in$

$t = panel\ thickness = .109\ in$

Substituting the dimensions into the buckling equation to find the critical buckling stress and using E at 375°C from Table 2:

$$\sigma = \frac{1}{6} \cdot \frac{24.8 \cdot 10^6\ psi}{1-.3^2} \cdot \left[\sqrt{12\left(1-.3^2\right)\left(\frac{.109\ in}{11.25\ in}\right)^2 + \left(\frac{\pi \cdot .109\ in}{11.25\ in}\right)^4} + \left(\frac{\pi \cdot .109\ in}{11.25\ in}\right)^2 \right]$$

$$= 150\ ksi$$

This stress is much larger than the value determined for shell buckling in Section 6.2.1.1, therefore the shell buckling allowable will be used (Note also that this value is greater than the yield stress, thus elastic buckling will not control).

6.2.2 Center Pipe

For the center pipe, criteria will be developed based on the more restrictive of NG-3133.6 (shell buckling) or NF-3322.1(c)(2) (buckling of stainless steel columns).

6.2.2.1 Shell Buckling - NG-3133.6

Determine factor A where R is the center pipe inside radius of 1.375"

$$A = \frac{.125}{R/t}$$
$$= \frac{.125}{.875\,in/0.50\,in} = .071$$

From Figure HA-3 for Type 304L stainless steel at 375°C, the allowable compressive stress is equal to the Factor B:

$$B = 8500\ psi$$

6.2.2.2 Column Buckling - NF-3322(c)(2):

The center pipe is approximately 28.0" tall. At the bottom of the basket, the pipe is restrained by the bottom plate. At the top of the basket, the center pipes interlock such that lateral restraint is provided. Thus the pipe is modeled as pinned at both the top and bottom (k=1.0, Reference 8). Using the radius of gyration calculated in Table 1, the equivalent buckling length is:

$$\frac{kl}{r} = \frac{1.0 \cdot 28.6\,in}{.815\,in} = 35.1$$

For this value of kl/r, the allowable axial compressive stress is:

$$F_a = S_y\left(0.47 - \frac{\left(kl/r\right)}{444}\right)$$

At the deadweight temperature of 375°C, this becomes

$$F_a = 14.9\,ksi\left(0.47 - \frac{35.1}{444}\right)$$
$$= 5.83\,ksi$$

This value is less than the value for shell buckling, thus the allowable compressive stress on the center pipe will be conservatively taken as value for column buckling.

6.2.3 Weld Criteria

Criteria for welds will be developed based on the quality factors provided in Table NG-3352-1. As stated in NG-3352, "The quality factor is used by multiplying the allowable stress limit for primary and secondary stress categories times the quality factor in evaluating the design." For deadweight loads, this is interpreted as factoring the allowable membrane plus bending stress (listed in

Table 3) by the appropriate quality factor from Table NG-3352-1. These values are listed and allowables developed in Table 4.

Table 4
Weld Criteria - Deadweight

Weld Type	Location(s)	Quality Factor	Allowable Primary Stress	Allowable Weld Stress
Continuous Fillet Weld (Type VII)	1. Center Pipe to Coupling Ring Weld 2. Coupling Ring to Bottom Plate Weld	n = 0.35	20.3 ksi	7.11 ksi
Intermittent butt weld; 2" welds on 4" center	3. Shell plate to bottom plate weld	n = 0.30 (Note 1)	20.3 ksi	6.03 ksi
Double sided intermittent fillet weld (1/8"); 2" welds on 4" centers.	4. Stiffener Plate to Center Pipe Weld 5. Stiffener Plate to Outer (Shell) Plate Weld 6. Stiffener Plate to Bottom Plate Weld	n = 0.30	20.3 ksi	6.03 ksi

Notes:
1. No criteria are provided for intermittent butt welds, therefore the quality factor for intermittent fillet welds is conservatively applied.
2. All welds are assumed to be inspected using surface visual examination in accordance with NG-5260.

7. LOAD CONDITIONS & COMBINATIONS

The Mark IV scrap baskets are evaluated for two load cases:

1. Lifting of the basket and contents while at 100°C. This loading is evaluated using criteria based on the safety factors incorporated in ANSI N-14.6.

2. Deadweight of the basket and contents while at 375°C. The basket inside the MCO is considered the limiting case. The basket may be at the top of the MCO (and thus be required to support only it's own weight) or at the bottom of the MCO where it is required to support the dead load of 4 added baskets.

No other loads are considered. Section 4.12.2 of the performance specification (See [1]) exempts the Mark IV baskets from consideration of drop, or other, accident loads.

An analysis weight of 3200 pounds (see Table 1 of Appendix 3) is used for each basket.

8. STRESS ANALYSIS - HAND CALCULATIONS

The Mark IV scrap basket will be evaluated using hand calculations. The analysis model used for each component is described in the following sections: As appropriate, separate evaluations are performed for lifting and deadweight and/or, tensile and compressive loadings.

8.1 Center Pipe

8.1.1 Lifting

The center pipe must support the total weight of the basket and contents for lifting. Stresses will be calculated over the gross cross section and at the reduced cross section at the grapple attachment. Note that local effects at the grapple attachment are not included in the scope of this calculation. The nominal cross sectional area is calculated in Table 1. At the grapple, the OD of the pipe remains 2.75 in, however the inside diameter increases from 1.75 inch to:

$$ID = 1.75\ in + 2\ (.125\ in) = 2.00\ in$$

The cross sectional area is:

$$\begin{aligned} A &= \frac{\pi}{4}\left(OD^2 - ID^2\right) \\ &= \frac{\pi}{4}\left[(2.75\ in)^2 - (2.00\ in)^2\right] \\ &= 2.80\ in^2 \end{aligned}$$

Stress at the grapple ring

$$f_a = \frac{3200\ lb}{2.80\ in^2} = 1.14\ ksi$$

Stress over the nominal cross section:

$$f_a = \frac{3200\ lb}{3.53\ in^2} = .91\ ksi$$

Ratios of calculated to allowable stress are:

$$Ratio: \frac{1.14\ ksi}{8.33\ ksi} = .14 \le 1.0 \Rightarrow OK \quad \text{(at the grapple ring)}$$

$$\frac{0.91\ ksi}{8.33\ ksi} = .11 \le 1.0 \Rightarrow OK \quad \text{(at the nominal cross section)}$$

8.1.2 Deadweight

Under deadweight loading, the critical load in the center pipe is axial compression resulting from the weight of the 4 upper baskets (for the bottom basket in the MCO). Assuming the center pipe carries the total weight of the upper baskets and neglecting the self weight of the center pipe in the bottom basket, the axial compression stress is:

$$f_a = \frac{(4\ baskets)\ 3200\ lb/basket}{3.53\ in^2} = 3.63\ ksi$$

Compared to the allowable column buckling stress determined in Section 6.2.2:

$$Ratio: \frac{3.63\ ksi}{5.83\ ksi} = .62 \le 1.0 \Rightarrow OK$$

8.2 Bottom Plate

To evaluate the bottom plate using hand calculations, the plate is modeled as a uniformly loaded circular sector. Equations are provided in [6] for two type of boundary conditions (1) all edges simply supported and (2) the sides simply supported and the outside edge fixed. Although this analysis model does not correspond directly with the loaded condition, it will provide an indication of the stress level in the bottom plate. Using this model, stresses in the bottom plate are the same for the lifting and deadweight conditions.

For both sets of boundary conditions, the applied pressure is taken as the plate self weight plus the fuel weight distributed over the annular plate area. Plate area is (using OD of the coupling ring and ID of the shell plate):

$$A_{plate} = \frac{\pi\left(OD^2 - ID^2\right)}{4}$$
$$= \frac{\pi\left((3.25in)^2 - (22.28in)^2\right)}{4} = 381.6\ in^2$$

The applied pressure load is:

$$q = \frac{W_{FUEL}}{A_{PLATE}} + \gamma_{STEEL} t_{PLATE}$$
$$= \frac{3010\ lb}{381.6\ in^2} + \left(.286\ lb/in^3\right)(.25\ in)$$
$$= 7.96\ lb/in^2 \Rightarrow use\ 8.0\ lb/in^2$$

Reference: fuel weight from Appendix 3, Table 1, assuming scrap weight = total fuel weight, 304 SS density from Mil Hndbk 5.

Case 1 - All edges Simply supported ([7], Table 24, Case 27 (Page 370):

The maximum bending stress is given as:

$$\sigma_{max} = \frac{\beta_1 \cdot q \cdot a^2}{t^2}$$

For θ equal to 60° (6 stiffeners), the factor β_1 is .155. Using the shell plate OD to calculate the stress:

$$\sigma_{max} = \frac{.155 \cdot 8.0\ lb/in^2 \cdot (11.25\ in)^2}{(.25\ in)^2}$$
$$= 2.51\ ksi$$

Case 2 - Outside edge fixed ([7], Table 24, Case 28 (Page 371):

The maximum bending stress is calculated using the same equation listed in the preceding paragraph. For the outside edge fixed and θ equal to 60° (6 stiffeners), the factor β is .204. The stress is:

$$\sigma_{max} = \frac{.204 \cdot 8.0\, lb/in^2 \cdot (11.25\, in)^2}{(.25\, in)^2}$$
$$= 3.30\, ksi$$

Case 2 controls. The ratio of calculated to allowable stress is determined for both lifting and deadweight allowables. The calculated stress in bending in the bottom plate. Thus the allowable for membrane plus bending stress is applied:

$$Ratio: \frac{3.30\, ksi}{8.33\, ksi} = .40 \le 1.0 \Rightarrow OK \quad (lifting)$$
$$\frac{3.30\, ksi}{20.3\, ksi} = .16 \le 1.0 \Rightarrow OK \quad (deadweight)$$

8.3 Center Pipe to Coupling Pipe and Coupling Pipe to Bottom Plate Welds

Both welds will be evaluated using a weld area based on the outside diameter of the center pipe:

$$A_w = \pi \cdot OD \cdot t_w$$
$$= \pi(2.75\, in)(.25\, in)$$
$$= 2.16\, in^2$$

Lifting

Under lifting loads, the welds are assumed to carry the total weight of the basket and contents. Weld stress is:

$$f_w = \frac{Weight}{A_w}$$
$$= \frac{3200\, lb}{2.16 in^2}\sqrt{2}$$
$$= 2.10\, ksi \quad \text{(at the weld throat)}$$

Deadweight

Under deadweight loads, the weld in the bottom basket is assumed to carry half of the total load from the upper 4 baskets. This assumption is reasonable since the center pipe is welded to the stiffeners, which transfer much of load directly to the bottom plate.

$$f_w = \frac{4 \cdot Weight}{A_w}$$
$$= \frac{4 \cdot 3200\ lb}{2.16 in^2}\sqrt{2}$$
$$= 8.38\ ksi \quad \text{(at the weld throat)}$$

Using the allowable weld stress from Table 4, the ratio of calculated to allowable stress is:

$$Ratio: \frac{8.38\ ksi / 2}{7.11\ ksi} = 0.59 \le 1.0 \Rightarrow OK$$

8.4 Stiffener Plate to Bottom Plate Welds

The loading in the stiffener plate to bottom plate welds is the same for deadweight and lifting. Stresses in the 2"-4" skip welds are calculated based on double fillets with 1/16" leg. The effective weld throat is compared to the stiffener plate thickness to determine the controlling element:

$$t_w = \frac{(2\ sides)(.0625\ in)}{\sqrt{2}} = .088\ in$$

The combined thickness of the double sided weld is slightly less than the plate thickness of .109 inches. In the initial analysis of this weld, the weld area was larger than the plate thickness and the stress was calculated based on the plate thickness. As noted in Table 11, below, the calculated margin is sufficient to cover this weld size change.

There are 6 stiffener plates (spaced at 60°) around the basket. Based on a coupling ring OD of 3.25in and a shell plate ID of 11.14 inches, and using the plate thickness, the weld area is:

$$A_w = L_w \cdot t_{plate} = 6\ stiffeners(22.28\ in - 3.25\ in)(.109\ in)/2$$
$$= (57.1\ in)(.109\ in)$$
$$= 6.22\ in^2$$

Assuming that the weld carries the total load of 3200 lb:

$$f_w = \frac{3200\ lb}{6.22 in^2}$$
$$= 0.51\ ksi$$

Using the allowable weld stress from Table 4, the ratio of calculated to allowable stress is:

$$Ratio: \frac{0.51\,ksi}{6.03\,ksi} = 0.08 \le 1.0 \Rightarrow OK$$

8.5 Stiffener Plate to Center Pipe Weld

The loading in the stiffener plate to center pipe welds is considered to be the same for deadweight and lifting. Stresses in the welds are calculated based on five (5) 2" long segments of double fillet welds with 1/8" leg. The effective weld throat is compared to the stiffener plate thickness to determine the controlling element:

$$t_w = \frac{(2\ sides)(.125\ in)}{\sqrt{2}} = .177\ in$$

The combined thickness of the double sided weld is greater than the plate thickness of .109 inches. Therefore, stress will be calculated based on the plate thickness.

There are 6 stiffener plates (spaced at 60°) around the basket. The total weld area is:

$$\begin{aligned} A_w &= L_w \cdot t_{plate} \\ &= (6\ stiffeners)(5\ welds/stiffener)(2\ in/weld)(.109\ in) \\ &= 6.54\ in^2 \end{aligned}$$

Assuming that the total load of 3200 pounds is carried in the welds, the stress is:

$$\begin{aligned} f_w &= \frac{3200\ lb}{6.54 in^2} \\ &= 0.49\ ksi \end{aligned}$$

Using the allowable stress for intermittent fillet welds from Table 4, the ratio of calculated to allowable stress is:

$$Ratio: \frac{0.49\ ksi}{6.03\ ksi} = 0.08 \le 1.0 \Rightarrow OK$$

8.6 Stiffener Plate to Outer (Shell) Plate Weld

The configuration of the stiffener plate to outer (shell) plate welds is identical to the configuration of the stiffener plate to center pipe welds evaluated in Section 8.5 (2" double fillet welds on 4" centers). Therefore, the qualification of the stiffener plate to center pipe welds in Section 8.5 also demonstrates qualfication of the stiffener to outer plate weld. No additional analysis is required.

8.7 Outer (Shell) Plate to Bottom Plate Weld

The outer plate to bottom plate weld is specified as a continuous butt weld. For a shell diameter of approximately 22.5", there will be welding for 1/2 of the circumference and the weld thickness will be equal to the outer plate thickness of .109 in. Weld area is:

$$\begin{aligned} A_w &= L_w t_w \\ &= (\pi\, OD)\, t_w \\ &= (\pi\, 22.5\ in).109\ in \\ &= 7.7\ in^2 \end{aligned}$$

Lifting

Assuming the weld carries the total load of 3200 pounds, the stress is:

$$\begin{aligned} f_w &= \frac{3200\ lb}{7.7 in^2} \\ &= 0.42\ ksi \end{aligned}$$

Using the allowable stress for intermittent fillet welds from Table 4, the ratio of calculated to allowable stress is:

$$Ratio: \frac{0.42\ ksi}{6.03\ ksi} = 0.07 \le 1.0 \Rightarrow OK$$

Deadweight

Under deadweight loads, it is assumed that the total weight of the upper baskets is transmitted through the outer shell(s). The load on the weld will be the weight of the 4 upper baskets plus the weight of the outer plate of the bottom basket. The weight of the shell plate will be neglected and the load is:

$$\begin{aligned} f &= (4\ baskets)\,(3200 lb/basket) \\ &= 12{,}800\ lb \end{aligned}$$

The stress is:

$$f_w = \frac{12{,}800\ lb}{3.85 in^2}$$
$$= 3.32\ ksi$$

And the ratio of calculated to allowable stress is:

$$Ratio: \frac{3.32\ ksi}{6.03\ ksi} = 0.55 \le 1.0 \Rightarrow OK$$

9. ANSYS ANALYSIS

In addition to the hand calculations described in Section 8, an evaluation of the Mark IV scrap basket was performed using the finite element model shown in Figure 1. The model was developed with SHELL63 elements with 6 degrees of freedom at each node. Thicknesses were input for each component of the model as listed below:

Component	Analysis Thickness
Bottom Plate	.25 in
Center Pipe	.50 in
Outer (Shell) Plate	.109 in
Stiffener Plate	.109 in

The mid-thicknesses of the center pipe and outer plates were modeled at radii of 1.375" and 11.25", respectively. (Note: The correct mid-thickness of the center pipe is 1.125". Since the effect of this change would be small, and since the stress ratios are relatively low, a reanlysis was not necessary.) The basket height was modeled as 26.85". To simplify the modeling, the stiffener plate was modeled as rectangular with a uniform height of 20.6".

The basket was modeled as 4 separate parts. At the welded connections, coincident nodes were coupled in translation. The forces at these coupled nodes are used to evaluate the connecting welds. All welds were modeled as being continuous. Since the welds are intermittent (2" welds at 4" spacing), the calculated weld stresses will be doubled.

9.1 Stress Analysis

9.1.1 Boundary Conditions

A 60° section of the basket was modeled. Symmetry boundary conditions were applied at the edges of the model (See Figure 2 & Figure 3). The top edge of the center pipe was fixed in the vertical direction to approximate the lifting configuration. These boundary conditions are also used for deadweight stresses. This is conservative since, under deadweight, additional support will be provided at the outside edge of the basket (by the bottom of the MCO for the bottom basket or by support rods for a top basket).

9.1.2 Loading

A uniform pressure load was applied to the bottom plate. The load was calculated (within ANSYS) using the fuel weight of 3010 lb (see Table 1 of Appendix 3, assuming the scrap

weight equal to the total fuel weight) over the annular area of the bottom plate. In addition, a 1.0g load was applied in the vertical direction. Thus the vertical reaction load should be equal to the basket self weight plus 3010 lb. The weight of the model (1/6 of a basket) is calulated in Table 5 using the input dimensions:

Table 5
ANSYS Model Weight

Component	Weight (As Modeled):
Bottom Plate	$W_{BOTTOM} = \left(\frac{60°}{360°}\right)\pi\left(OR^2 - IR^2\right)\cdot t_{BOTTOM}\cdot\gamma_{STEEL}$ $= \left(\frac{60°}{360°}\right)\pi\left[(11.25\ in)^2 - (1.375\ in)^2\right]\cdot .25in\cdot .2854\ lb/in^3$ $= 4.658\ lb$
Center Pipe	$W_{C.PIPE} = \alpha\cdot IR\cdot t_{C.PIPE}\cdot h\cdot\gamma_{STEEL}$ $= 60°\left(\frac{\pi}{180°}\right)\cdot 1.375\ in\cdot .50\ in\cdot 26.85\ in\cdot .2854\ lb/in^3$ $= 5.517\ lb$
Outer Plate	$W_{SHELL} = \alpha\cdot OR\cdot t_{SHELL}\cdot h\cdot\gamma_{STEEL}$ $= 60°\left(\frac{\pi}{180°}\right)\cdot 11.25\ in\cdot ..109\ in\cdot 26.85\ in\cdot .2854\ lb/in^3$ $= 9.840\ lb$
Stiffener Plate	$W_{STIFFENER} = (OR - IR)\cdot t_{STIFFENER}\cdot h_{STIFFENER}\cdot\gamma_{STEEL}$ $= (11.25\ in - 1.375\ in)\cdot ..109\ in\cdot 20.6\ in\cdot .2854\ lb/in^3$ $= 6.328\ lb$
TOTAL WEIGHT	**26.3 pounds** (1/6 Basket)

Under the 1g lifting load, the total reaction should be approximately:

$$F_Z = W_{FUEL} + W_{BASKET}$$
$$= \frac{3010\ lb}{6} + 26.3\ lb$$
$$= 528.0\ lb$$

Review of the stress analysis output file shows that the reported reaction force in the Z direction is 527.36 lb. This is acceptable compared to the value calculated above.

9.1.3 Results

The SHELL63 elements used for this analysis report stresses at the top and bottom surfaces, and at the midthickness of the element. In this analysis, the midthickness stress is classified as membrane stress. Since stresses are low, stresses at all locations are conservatively classifed as general membrane stresses, P_m. Stresses at the top and bottom surface stresses are classified as membrane plus bending stresses: $P_m + P_b$.

Stress results for each part of the scrap basket were listed in the ANSYS analysis. Results are summarized in Table 11 for lifting and in Table 12 for deadweight (conservatively, the analyses are identical, only the allowables are different) In addition, stress contour plots are included (for the top surface stresses only) for each component (See Figure 4 through Figure 9).

9.1.4 Weld Evaluation

Welds are evaluated in the following tables:

Stiffener to Bottom Plate Weld	Table 6
Stiffener to Center Pipe Weld	Table 7
Stiffener to Outer (Shell) Plate Weld	Table 8
Center Pipe to Bottom Plate Weld	Table 9
Outer (Shell) Plate to Bottom Plate Weld	Table 10

Evaluation of all welds follows the same methodology.

1. Length of each segment of weld, L_w, is determined based on node point coordinates
2. Forces at each node are taken from the ANSYS output and a resultant force calculated as:

$$F_{RESULTANT} = \sqrt{F_X^2 + F_Y^2 + F_Z^2}$$

3. Weld load (pounds per inch) is calculated as: $F_{RESULTANT}/L_w$.

4. Weld stress is calculated based on the weld load and the weld area. Area used for each weld is listed in the notes at the bottom of the tables.

5. The stress ratio (calculated stress / allowable stress) is calculated. The allowable stress is listed at the bottom of each table. The intermittent fillet welds (2" welds on 4" centers) were modeled as continuous, therefore the calculated stresses are doubled (ratio of 4"/2").

As shown in the weld tables, all stresses are below the allowable values.

Table 6
Evaluation of Stiffener to Bottom Plate Weld Using ANSYS Results

Stiffener to Bottom Plate Weld

Node	Location (X, in)	Weld Length	Load Fx	Fy	Fz	Resultant	Weld Stress[1] (lb/in)	(lb/in^2)	Stress Ratio
7	1.375	0.244	-6.18	0	-4.59	7.70	63.18	409.9	0.058
27	1.862	0.501	-10.12	0	-0.84	10.15	40.56	263.1	0.037
47	2.377	0.528	-13.11	0	7.37	15.04	56.95	369.5	0.052
67	2.919	0.557	-14.23	0	13.78	19.81	71.11	461.3	0.065
87	3.491	0.588	-14.90	0	19.19	24.30	82.69	536.4	0.075
107	4.094	0.620	-15.31	0	24.80	29.15	94.05	610.1	0.086
127	4.730	0.654	-15.34	0	30.62	34.25	104.77	679.7	0.096
147	5.402	0.690	-14.92	0	36.29	39.24	113.80	738.2	0.104
167	6.110	0.727	-13.97	0	41.31	43.61	119.91	777.9	0.109
187	6.856	0.767	-12.48	0	45.03	46.73	121.82	790.3	0.111
207	7.644	0.809	-10.41	0	46.66	47.81	118.16	766.5	0.108
227	8.475	0.854	-7.84	0	45.15	45.82	107.38	696.6	0.098
247	9.351	0.900	-4.83	0	38.97	39.27	87.25	566.0	0.080
267	10.275	0.950	-2.33	0	23.53	23.65	49.80	323.1	0.045
287	11.250	0.488	-0.92	0	2.65	2.80	11.49	74.5	0.010
						Maximum:	121.82	790.3	0.111

scrap4a.xls-welds

Notes: 1. Stress at weld throat based on double fillet with weld size (leg) of 0.109 inches.
2. Stress ratio based on an allowable, Fw, of 7.11 ksi for continuous fillet welds
3. The stiffener to Center Pipe weld is an intermittent weld (2" on 4" centers), since only half the length is welded, stresses are factored by 2.

Note: Current design is for 1/16" welds, but welds are obviously adequate due to large margins.

Table 7
Evaluation of Stiffener to Center Pipe Weld Using ANSYS Results

Stiffener to Center Pipe Weld

Node	Location (X, in)	Weld Length	Load Fx	Fy	Fz	Resultant	Weld Stress[1,3] (lb/in)	(lb/in^2)	Stress Ratio
7	0.000	0.251	-6.18	0	-4.59	7.70	61.29	397.6	0.066
1027	0.502	0.502	-4.78	0	-9.98	11.06	44.02	285.6	0.047
1047	1.005	0.502	-1.89	0	-12.57	12.71	50.60	328.2	0.054
1067	1.507	0.502	0.78	0	-13.18	13.20	52.55	340.9	0.057
1087	2.010	0.502	2.23	0	-13.05	13.24	52.70	341.9	0.057
1107	2.512	0.502	2.65	0	-12.61	12.89	51.29	332.8	0.055
1127	3.015	0.502	2.49	0	-12.11	12.36	49.21	319.2	0.053
1147	3.517	0.502	2.08	0	-11.60	11.79	46.91	304.3	0.050
1167	4.020	0.502	1.60	0	-11.11	11.22	44.68	289.8	0.048
1187	4.522	0.502	1.09	0	-10.64	10.70	42.57	276.2	0.046
1207	5.024	0.502	0.59	0	-10.19	10.21	40.63	263.6	0.044
1227	5.527	0.502	0.11	0	-9.79	9.79	38.96	252.8	0.042
1247	6.029	0.502	-0.35	0	-9.43	9.43	37.55	243.6	0.040
1267	6.532	0.502	-0.76	0	-9.11	9.14	36.40	236.1	0.039
1287	7.034	0.502	-1.13	0	-8.84	8.92	35.49	230.2	0.038
1307	7.537	0.502	-1.45	0	-8.62	8.74	34.81	225.8	0.037
1327	8.039	0.502	-1.72	0	-8.45	8.62	34.32	222.7	0.037
1347	8.542	0.502	-1.94	0	-8.32	8.54	34.01	220.6	0.037
1367	9.044	0.502	-2.12	0	-8.24	8.50	33.85	219.6	0.036
1387	9.546	0.503	-2.25	0	-8.19	8.50	33.81	219.4	0.036
1407	10.049	0.502	-2.33	0	-8.20	8.52	33.91	220.0	0.036
1427	10.551	0.503	-2.35	0	-8.24	8.57	34.10	221.2	0.037
1447	11.054	0.503	-2.33	0	-8.32	8.64	34.40	223.1	0.037
1467	11.556	0.503	-2.25	0	-8.45	8.74	34.80	225.8	0.037
1487	12.059	0.503	-2.12	0	-8.62	8.88	35.33	229.2	0.038
1507	12.561	0.502	-1.92	0	-8.84	9.04	36.03	233.7	0.039
1527	13.063	0.503	-1.65	0	-9.11	9.25	36.83	238.9	0.040
1547	13.566	0.503	-1.31	0	-9.43	9.52	37.87	245.7	0.041
1567	14.068	0.503	-0.88	0	-9.81	9.85	39.20	254.3	0.042
1587	14.571	0.503	-0.35	0	-10.26	10.27	40.86	265.1	0.044
1607	15.073	0.503	0.30	0	-10.79	10.79	42.96	278.7	0.046
1627	15.576	0.503	1.08	0	-11.40	11.45	45.58	295.7	0.049
1647	16.078	0.502	2.04	0	-12.14	12.31	49.04	318.1	0.053
1667	16.580	0.502	3.22	0	-12.99	13.38	53.27	345.5	0.057
1687	17.083	0.503	4.72	0	-14.05	14.82	59.00	382.7	0.063
1707	17.585	0.503	6.68	0	-15.23	16.63	66.19	429.4	0.071
1727	18.088	0.502	9.28	0	-16.77	19.16	76.28	494.8	0.082
1747	18.590	0.503	12.58	0	-18.39	22.28	88.68	575.3	0.095
1767	19.093	0.503	16.96	0	-20.81	26.85	106.85	693.2	0.115
1787	19.595	0.502	22.68	0	-24.07	33.07	131.63	853.9	0.142
1807	20.098	0.503	42.78	0	-28.93	51.64	205.55	1333.4	0.221
1827	20.600	0.251	56.94	0	-34.82	66.74	531.81	3450.0	0.572
						Maximum:	531.81	3450.0	0.572

scrap4a.xls-welds

Notes: 1. Stress on weld throat based on double fillet with weld size (leg) of 0.109 inches.
2. Stress ratio based on an allowable, Fw, of 6.03 ksi for intermittent fillet welds.
3. The stiffener to Center Pipe weld is an intermittent weld (2" on 4" centers), since only half the length is welded, stresses are factored by 2.

Note: Weld spacing increased to 4.43". Margins are adequate to cover this minor change.

Table 8
Evaluation of Stiffener to Outer (Shell) Plate Weld Using ANSYS Results

Stiffener to Outer Shell Weld

Node	Location (Z, in)	Weld Length	Load Fx	Load Fy	Load Fz	Load Resultant	Weld Stress (lb/in)	Weld Stress (lb/in^2)	Stress Ratio
287	0.000	0.251	-0.92	0	2.65	2.80	22.30	289.3	0.048
3307	0.502	0.502	0.11	0	0.21	0.24	0.94	12.2	0.002
3327	1.005	0.502	-0.36	0	-0.56	0.66	2.64	34.2	0.006
3347	1.507	0.502	-0.64	0	-0.86	1.08	4.28	55.6	0.009
3367	2.010	0.502	-0.63	0	-0.67	0.92	3.67	47.6	0.008
3387	2.512	0.502	-0.49	0	-0.22	0.54	2.16	28.0	0.005
3407	3.015	0.502	-0.33	0	0.32	0.46	1.83	23.8	0.004
3427	3.517	0.502	-0.21	0	0.87	0.89	3.55	46.1	0.008
3447	4.020	0.502	-0.14	0	1.40	1.40	5.59	72.5	0.012
3467	4.522	0.502	-0.10	0	1.90	1.90	7.57	98.2	0.016
3487	5.024	0.502	-0.08	0	2.37	2.37	9.45	122.6	0.020
3507	5.527	0.502	-0.07	0	2.82	2.82	11.22	145.6	0.024
3527	6.029	0.502	-0.07	0	3.24	3.24	12.89	167.3	0.028
3547	6.532	0.502	-0.06	0	3.63	3.63	14.44	187.4	0.031
3567	7.034	0.502	-0.06	0	3.99	3.99	15.88	206.0	0.034
3587	7.537	0.502	-0.06	0	4.32	4.32	17.19	223.0	0.037
3607	8.039	0.502	-0.05	0	4.61	4.61	18.37	238.3	0.040
3627	8.542	0.502	-0.05	0	4.88	4.88	19.41	251.9	0.042
3647	9.044	0.502	-0.04	0	5.11	5.11	20.33	263.7	0.044
3667	9.546	0.503	-0.04	0	5.30	5.30	21.10	273.7	0.045
3687	10.049	0.502	-0.03	0	5.46	5.46	21.74	282.0	0.047
3707	10.551	0.503	-0.02	0	5.58	5.58	22.22	288.3	0.048
3727	11.054	0.503	-0.02	0	5.67	5.67	22.55	292.6	0.049
3747	11.556	0.503	-0.01	0	5.71	5.71	22.72	294.8	0.049
3767	12.059	0.503	-0.01	0	5.71	5.71	22.73	294.9	0.049
3787	12.561	0.502	0.00	0	5.67	5.67	22.58	292.9	0.049
3807	13.063	0.503	0.01	0	5.58	5.58	22.20	288.0	0.048
3827	13.566	0.503	0.01	0	5.44	5.44	21.66	281.0	0.047
3847	14.068	0.503	0.02	0	5.26	5.26	20.92	271.4	0.045
3867	14.571	0.503	0.03	0	5.02	5.02	19.99	259.3	0.043
3887	15.073	0.503	0.04	0	4.74	4.74	18.87	244.9	0.041
3907	15.576	0.503	0.05	0	4.42	4.42	17.58	228.1	0.038
3927	16.078	0.502	0.07	0	4.05	4.05	16.14	209.4	0.035
3947	16.580	0.502	0.08	0	3.65	3.65	14.53	188.6	0.031
3967	17.083	0.503	0.10	0	3.23	3.23	12.85	166.7	0.028
3987	17.585	0.503	0.12	0	2.79	2.79	11.10	144.0	0.024
4007	18.088	0.502	0.16	0	2.34	2.34	9.32	121.0	0.020
4027	18.590	0.503	0.19	0	1.90	1.91	7.60	98.6	0.016
4047	19.093	0.503	0.26	0	1.47	1.49	5.93	77.0	0.013
4067	19.595	0.502	0.30	0	1.14	1.18	4.68	60.8	0.010
4087	20.098	0.503	-0.16	0	0.84	0.86	3.41	44.2	0.007
4107	20.600	0.251	2.08	0	1.17	2.38	18.99	246.4	0.041
						Maximum:	22.73	294.9	0.049

scrap4a.xls-welds

Notes: 1. Stress on weld throat based on double fillet with weld size (leg) of 0.109 inches.
2. Stress ratio based on an allowable, Fw, of 6.03 ksi for intermittent fillet welds.
3. The stiffener to outer shell weld is an intermittent weld (2" on 4" centers), since only half the length is welded, stresses are factored by 2.

Note: Weld spacing increased to 4.43". Margins are adequate to cover this minor change.

Table 9
Evaluation of Center Pipe to Bottom Plate Weld Using ANSYS Results

Stiffener to Bottom Plate Weld

Node	Location (X, in)	Weld Length	Load Fx	Load Fy	Load Fz	Load Resultant	Weld Stress[1] (lb/in)	Weld Stress[1] (lb/in^2)	Stress Ratio
7	1.375	0.244	-6.18	0	-4.59	7.70	63.18	409.9	0.068
27	1.862	0.501	-10.12	0	-0.84	10.15	40.56	263.1	0.044
47	2.377	0.528	-13.11	0	7.37	15.04	56.95	369.5	0.061
67	2.919	0.557	-14.23	0	13.78	19.81	71.11	461.3	0.076
87	3.491	0.588	-14.90	0	19.19	24.30	82.69	536.4	0.089
107	4.094	0.620	-15.31	0	24.80	29.15	94.05	610.1	0.101
127	4.730	0.654	-15.34	0	30.62	34.25	104.77	679.7	0.113
147	5.402	0.690	-14.92	0	36.29	39.24	113.80	738.2	0.122
167	6.110	0.727	-13.97	0	41.31	43.61	119.91	777.9	0.129
187	6.856	0.767	-12.48	0	45.03	46.73	121.82	790.3	0.131
207	7.644	0.809	-10.41	0	46.66	47.81	118.16	766.5	0.127
227	8.475	0.854	-7.84	0	45.15	45.82	107.38	696.6	0.116
247	9.351	0.900	-4.83	0	38.97	39.27	87.25	566.0	0.094
267	10.275	0.950	-2.33	0	23.53	23.65	49.80	323.1	0.054
287	11.250	0.488	-0.92	0	2.65	2.80	11.49	74.5	0.012
						Maximum:	121.82	790.3	0.131

scrap4a.xls-welds

Notes:
1. Stress at weld throat based on double fillet with weld size (leg) of 0.109 inches.
2. Stress ratio based on an allowable, Fw, of 6.03 ksi for intermittent fillet welds.
3. The stiffener to Center Pipe weld is an intermittent weld (2" on 4" centers), since only half the length is welded, stresses are factored by 2.

Note: Current weld design is continuous. Above evaluation is conservative.

Table 10
Evaluation of Outer Shell to Bottom Plate Weld Using ANSYS Results

Outer Shell to Bottom Plate Weld

Node	Location (θ)	Weld Length	Load F_R	Load F_θ	Load Fz	Load Resultant	Weld Stress (lb/in)	Weld Stress (lb/in^2)	Stress Ratio
281	-30.0	0.491	-1.85	5.38	-8.76	10.44	42.54	390.3	0.055
282	-25.0	0.982	-3.59	-3.06	-17.08	17.72	36.10	331.2	0.046
283	-20.0	0.982	-3.29	-5.62	-15.69	16.99	34.61	317.5	0.044
284	-15.0	0.982	-2.83	-7.16	-13.13	15.22	31.00	284.4	0.040
285	-10.0	0.982	-2.19	-7.33	-8.89	11.73	23.89	219.1	0.031
286	-5.0	0.982	-1.31	-5.48	-0.35	5.65	11.50	105.5	0.015
287	0.0	0.982	0.14	0.00	5.53	5.53	11.27	103.4	0.014
288	5.0	0.982	-1.31	5.48	-0.35	5.65	11.50	105.5	0.015
289	10.0	0.982	-2.19	7.33	-8.89	11.73	23.89	219.1	0.031
290	15.0	0.982	-2.83	7.16	-13.13	15.22	31.00	284.4	0.040
291	20.0	0.982	-3.29	5.62	-15.69	16.99	34.61	317.5	0.044
292	25.0	0.982	-3.59	3.06	-17.08	17.72	36.10	331.2	0.046
293	30.0	0.491	-1.85	-5.38	-8.76	10.44	42.54	390.3	0.055
						Maximum:	42.54	390.3	0.055

scrap4a.xls-welds

Notes: 1. Length is αR, where α is in radians and R is the IR of the outer shell of ≈11.25 in.
2. Weld stress based on single groove weld allowable for a weld thickness of 0.109 inches.
3. Stress ratio based on an allowable, Fw, of 6.03 ksi for single groove welds.
4. The outer shell to bottom plate weld is an intermittent weld (2" on 4" centers), since only half the length is welded, stresses are factored by 2.

Note: The above analysis is conservative for the current design, which specifies a continuous weld.

Table 11
ANSYS Results - Deadweight Allowables

Location		Stress Category	Stress Intensities Maximum	Stress Intensities Allowable	Ratio
Bottom Plate	Middle	P_m	0.17 ksi	13.5 ksi	0.01
	Top	$P_m + P_b$	2.78 ksi	20.3 ksi	0.14
	Bottom	$P_m + P_b$	2.81 ksi	20.3 ksi	0.14
Center Pipe	Middle	P_m	0.77 ksi	13.5 ksi	0.06
	Top	$P_m + P_b$	0.98 ksi	20.3 ksi	0.05
	Bottom	$P_m + P_b$	0.85 ksi	20.3 ksi	0.04
Shell Plate	Middle	P_m	0.43 ksi	13.5 ksi	0.03
	Top	$P_m + P_b$	1.78 ksi	20.3 ksi	0.09
	Bottom	$P_m + P_b$	2.10 ksi	20.3 ksi	0.10
Stiffener Plate	Middle	P_m	2.23 ksi	13.5 ksi	0.17
	Top	$P_m + P_b$	2.23 ksi	20.3 ksi	0.11
	Bottom	$P_m + P_b$	2.23 ksi	20.3 ksi	0.11
Maximum Component Stresses:		P_m	2.23 ksi	13.5 ksi	0.17
		$P_m + P_b$	2.81 ksi	20.3 ksi	0.14
Center Pipe To Coupling Pipe Weld			0.05 ksi	7.11 ksi	0.01
Center Pipe To Coupling Pipe Weld			0.05 ksi	7.11 ksi	0.01
Stiffener Plate to Bottom Plate Weld			0.79 ksi	6.03 ksi	0.13
Stiffener Plate to Center Pipe Weld			3.45 ksi	6.03 ksi	0.57
Stiffener Plate to Shell Plate Weld			0.29 ksi	6.03 ksi	0.05

scrap4a.xls - results

Table 12
ANSYS Results - Lifting Allowables

Location		Stress Category	Stress Intensities		Ratio
			Maximum	Allowable	
Bottom Plate	Middle	P_m	0.17 ksi	8.33 ksi	0.02
	Top	$P_m + P_b$	2.78 ksi	8.33 ksi	0.33
	Bottom	$P_m + P_b$	2.81 ksi	8.33 ksi	0.34
Center Pipe	Middle	P_m	0.77 ksi	8.33 ksi	0.09
	Top	$P_m + P_b$	0.98 ksi	8.33 ksi	0.12
	Bottom	$P_m + P_b$	0.85 ksi	8.33 ksi	0.10
Shell Plate	Middle	P_m	0.43 ksi	8.33 ksi	0.05
	Top	$P_m + P_b$	1.78 ksi	8.33 ksi	0.21
	Bottom	$P_m + P_b$	2.10 ksi	8.33 ksi	0.25
Stiffener Plate	Middle	P_m	2.23 ksi	8.33 ksi	0.27
	Top	$P_m + P_b$	2.23 ksi	8.33 ksi	0.27
	Bottom	$P_m + P_b$	2.23 ksi	8.33 ksi	0.27
Maximums			2.81 ksi	8.33 ksi	0.34

scrap4a.xls - results

Figure 1
ANSYS Model

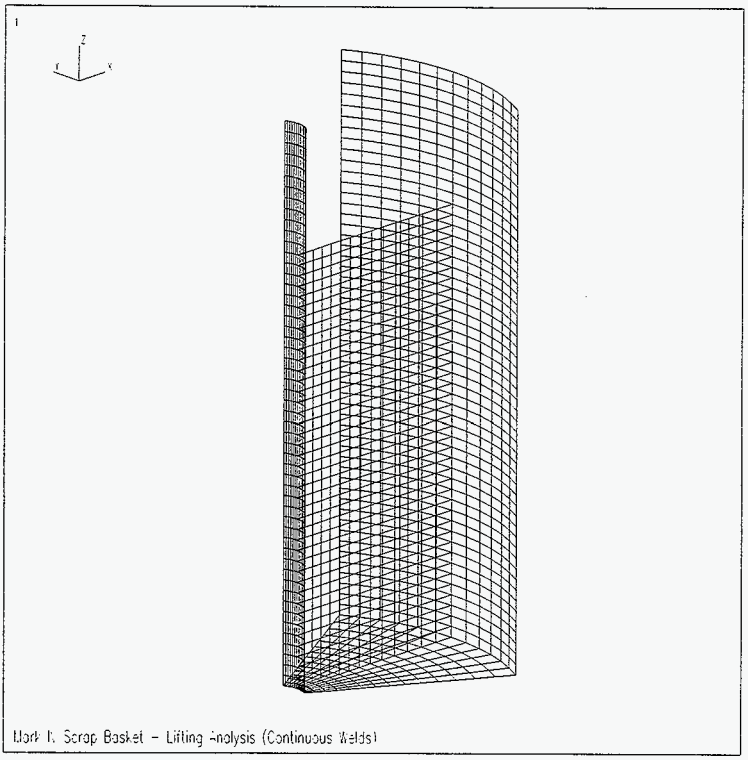

Figure 2
Boundary Conditions

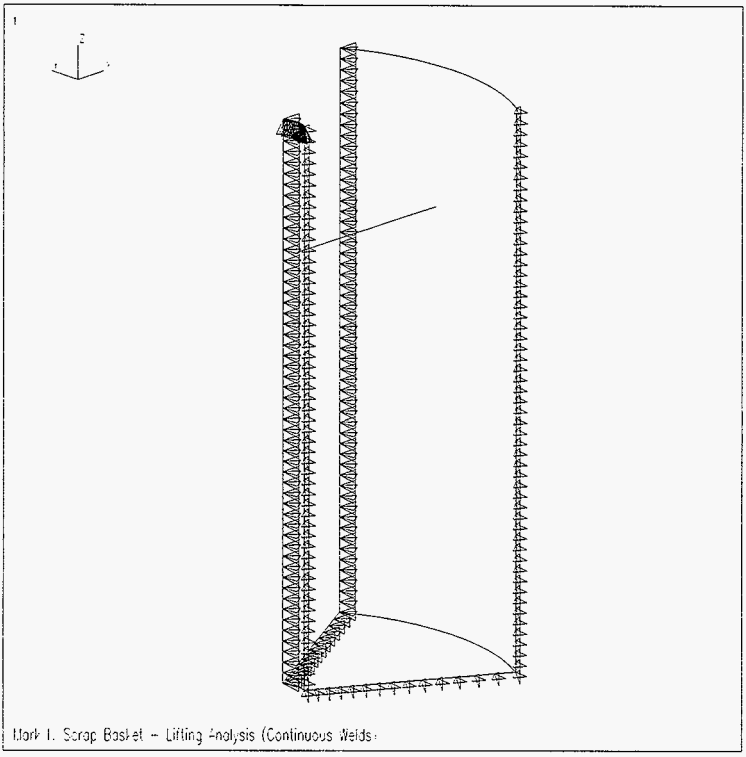

Figure 3
Boundary Conditions- Top View

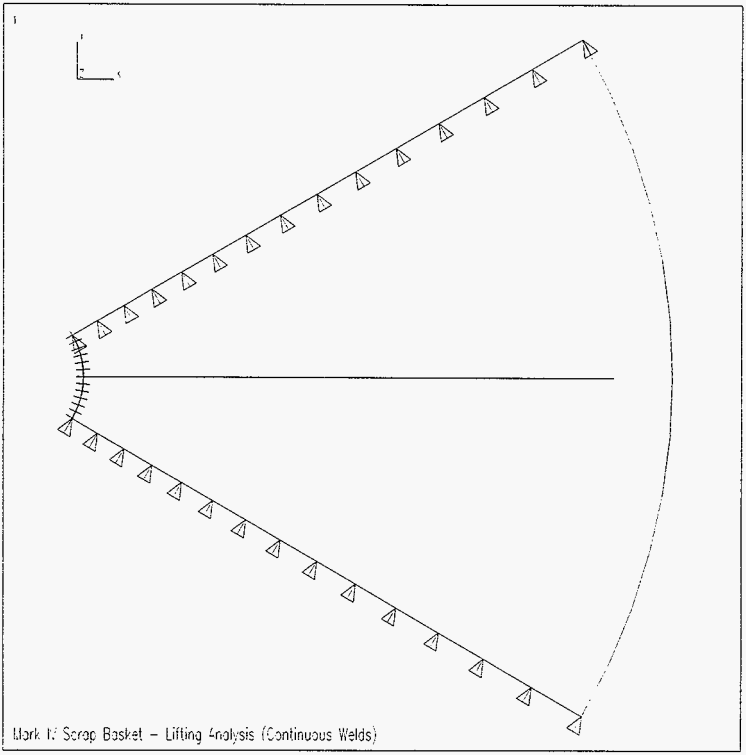

Figure 4
Stress Intensity

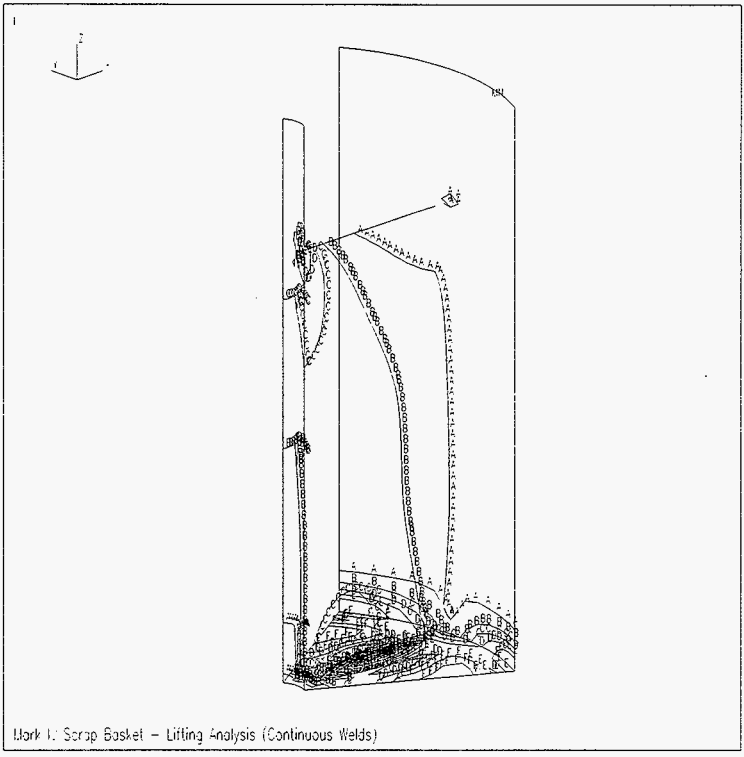

Mark IV Scrap Basket – Lifting Analysis (Continuous Welds)

Figure 5
Stress Intensity in Bottom Plate

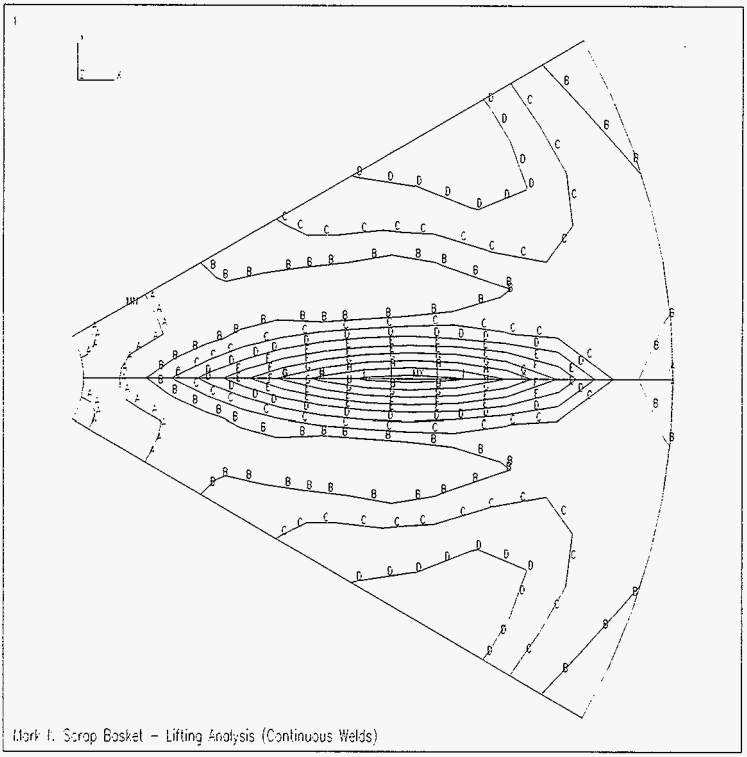

Figure 6
Stress Intensity in Center Pipe

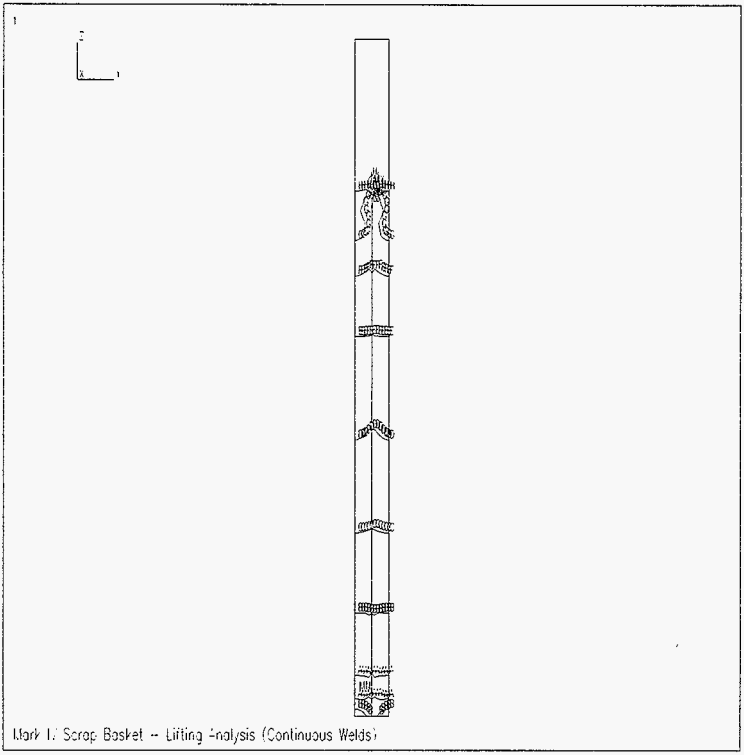

Figure 7
Stress Intensity in Center Pipe at Stiffener Plate Connection

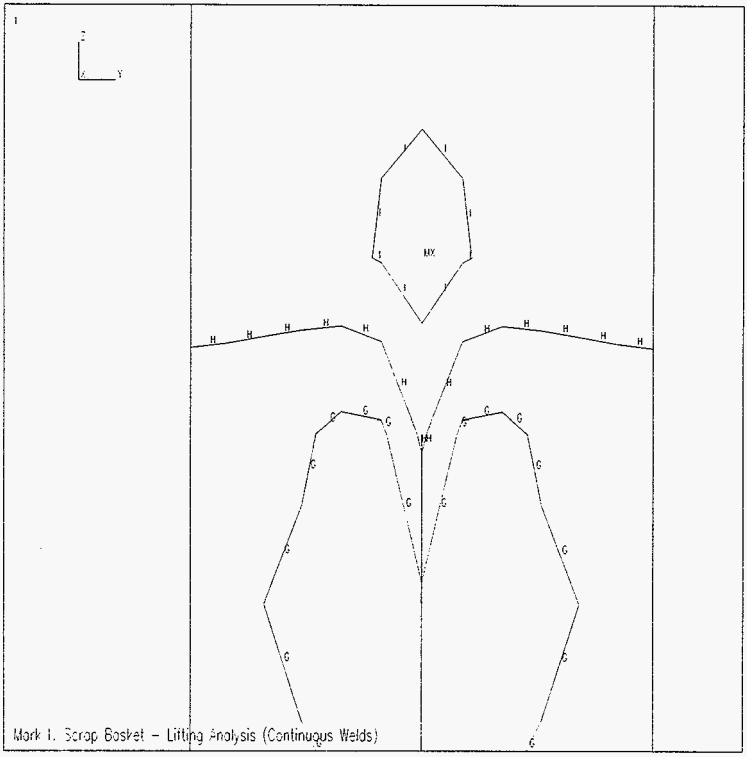

Figure 8
Stress Intensity in Outer (Shell) Plate

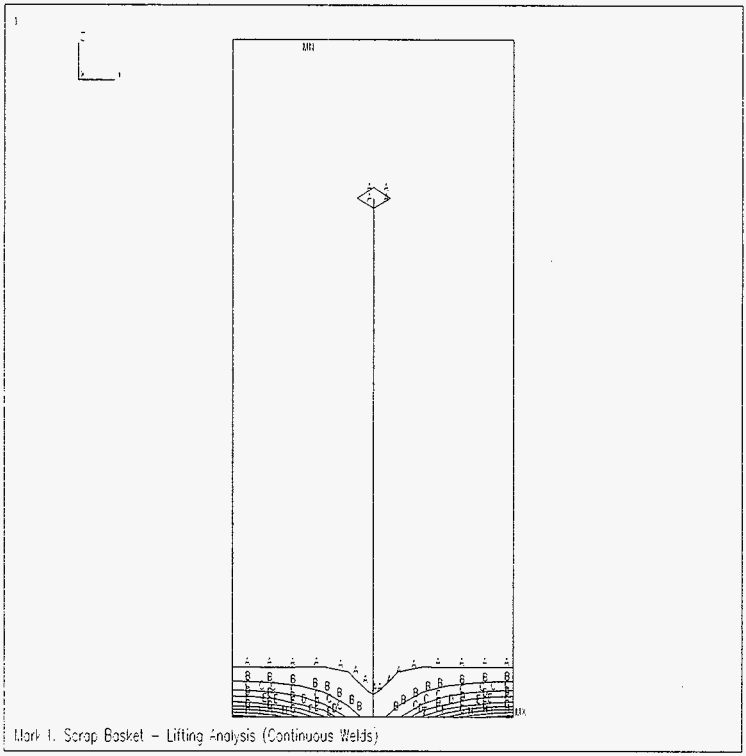

Mark I. Scrap Basket – Lifting Analysis (Continuous Welds)

Figure 9
Stress Intensity in Stiffener Plate

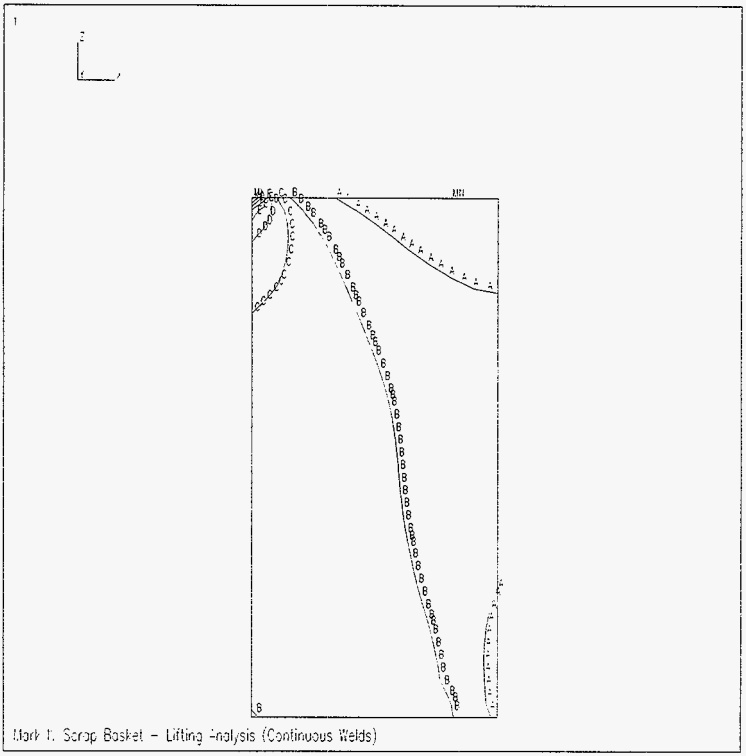

APPENDIX A

COMPUTER RUN OUTPUT SHEETS

AND

INPUT FILE LISTINGS

COMPUTER RUN COVER SHEET

Project Number:	KH-8009-8
Computer Code:	ANSYS®-PC
Software Version:	5.0A
Computer System:	MS-DOS, Pentium® Processor
Computer Run File Number:	KH-8009-8-07
Unique Computer Run File Name:	Scrap4a.inp
Run Description:	Stress Analysis of the Mark IV Scrap Basket
Creation Date/Time:	16 January 1997/11:02:38am

Bob V. Winkel 4/18/97

Prepared By: Bob V. Winkel Date

Joe Nichols 4/17/97

Checked By: Joe Nichols Date

LISTING OF SCRAP4A.INP

```
/batch,list
/filenam,scrap4a
/title,Mark IV Scrap Basket - Lifting Analysis (Continuous Welds)

/com  60 Degree section of Mark IV scrap basket.
/com  Lifting load is evaluated by restraining the center pipe in the axial
/com  direction and applying a uniform pressure load to the bottom plate
/com  plus 1 g in the axial (z) direction.  Pressure load is taken as the
/com  weight of fuel in a Mark IV fuel basket over the area of the annular
/com  bottom plate.  The basket is modeled with shell elements with
/com  thicknesses input.
/com
/com  Each part (e.g., bottom plate, center pipe) is modeled separately.
/com  At weld locations, the parts are joined by merging coincident nodes.

/com  ***********************************************************************
/com     This analysis assumes continuous welds between all parts.
/com  ***********************************************************************

/prep7

tref,400      ! evaluate at 662F (350C)

et,1,shell63   ! bottom plate
et,2,shell63   ! center pipe
et,3,shell63   ! outer shell
et,4,shell63   ! stiffener

r,1,0.25      ! bottom plate thickness
r,2,0.50      ! center pipe thickness
r,3,0.109     ! outer shell thickness
r,4,0.109     ! stiffener thickness

pi=3.1415926
ir=1.375
or=11.25
hi=26.85
fuelwt = 3010              ! weight of fuel in Mark IV basket
area=pi*((or*or)-(ir*ir))     ! total area of bottom plate
deadload = fuelwt/area        ! fuel pressure on bottom plate
/triad,ltop

/com  material properties
dens,1,.2854
nuxy,1,.3

mptemp,1, 70,100,200,300,400,500
mptemp,7,600,650,700,750
/com elastic moduli for 304L stainless steel
mpdata,ex,1,1,28.3E+06,28.1E+06,27.6E+06,27.0E+06,26.5E+06,25.8E+06
mpdata,ex,1,7,25.3E+06,25.1E+06,24.8E+06,24.5E+06
/com list material properties
mplist
```

```
csys,1
/com bottom plate ************************************
n, 1,ir,-30    ! inside arc
n,13,ir, 30
fill,1,13

n,281,or,-30    ! outside arc
n,293,or, 30
fill,281,293
fill,1,281,13,,20,13,1,2.0

type,1
real,1
e,1,21,22,2
egen,12,1,-1
egen,14,20,-12
save

/com center pipe ************************************
ngen,2,1000,1,13,1
ngen,42,20,1001,1013,1,,,20.6/41
ngen,13,20,1821,1833,1,,,(26.85-20.6)/12

type,2
real,2
e,1001,1002,1022,1021
egen,12,1,-1
egen,53,20,-12

/com outside shell ************************************
ngen,2,3000,281,293,1
ngen,42,20,3281,3293,1,,,20.6/41
ngen,13,20,4101,4113,1,,,(26.85-20.6)/12

type,3
real,3
e,3281,3282,3302,3301
egen,12,1,-1
egen,53,20,-12

/com stiffener plate ************************************
n,5001,ir
n,5015,or
fill,5001,5015,13,,1,,,2.0
ngen,42,20,5001,5015,1,,,20.6/41
!ngen,13,20,5821,5835,1,,,(26.85-20.6)/12

type,4
real,4
e,5001,5002,5022,5021
egen,14,1,-1
egen,41,20,-14
save
```

```
/com nodes in cylindrical system
nall
nrotat,all

/com boundary conditions ****************************************
/com symmetry
csys,1
nsel,s,loc,y,30
nsel,a,loc,y,-30
nplot
d,all,uy,0.0,,,,rotx,rotz

/com top of center pipe for lifting
nsel,s,loc,x,ir
nsel,r,loc,z,hi
d,all,uz,0
nall
save

/com merge coincident nodes at welded connections ************************
/com center pipe to bottom plate weld
esel,s,type,,1    ! bottom plate
esel,a,type,,2    ! center pipe
nsle              ! select nodes associated w/elements
nummrg,node

/com bottom plate to outer shell (assume - verify rotation)
esel,s,type,,1    ! bottom plate
esel,a,type,,3    ! outer shell
nsle              ! select nodes associated w/elements
nummrg,node

/com outer shell to stiffener (assume continuous)
esel,s,type,,4    ! stiffener
esel,a,type,,3    ! outer shell
nsle              ! select nodes associated w/elements
nummrg,node

/com bottom plate to stiffener (assume continuous)
esel,s,type,,4    ! stiffener
esel,a,type,,1    ! bottom plate
nsle              ! select nodes associated w/elements
nummrg,node

/com center pipe to stiffener (assume continuous)
esel,s,type,,4    ! stiffener
esel,a,type,,2    ! center pipe
nsle              ! select nodes associated w/elements
nummrg,node
nall
eall

/com applied loads ******************************************************
esel,s,type,,1
sfe,all,2,pres,,deadload  ! pressure load
eall
```

```
nall
acel,,,1.0              ! gravity load
save
fini

/solu ***************************************************************
solve
fini
/post1
set,last
rsys,1          ! results in global cylindrical

/com stiffener to bottom plate weld
esel,s,type,,4    ! select stiffener elements
nsle            ! select stiffener element nodes
nsel,r,loc,z,0    ! nodes at base
nlist
nforce

/com stiffener to center pipe weld
nsle            ! select stiffener element nodes
nsel,r,loc,x,ir   ! nodes at center pipe
nlist
nforce

/com stiffener to outer shell weld
nsle            ! select stiffener element nodes
nsel,r,loc,x,or   ! nodes at outer shell
nlist
nforce

/com center pipe to bottom plate weld
esel,s,type,,1    ! select bottom plate
nsle            ! select bottom plate element nodes
nsel,r,loc,x,ir   ! nodes at center pipe
nlist
nforce

/com outer shell to bottom plate weld
nsle            ! select bottom plate element nodes
nsel,r,loc,x,or   ! nodes at outer shell
nlist
nforce
nall
eall

/com print stress results *******************************************
/page,,,800     ! 800 lines per page (elimate headers)
/com stress results in bottom plate
esel,s,type,,1   ! bottom plate
shell,mid
prns,s,prin     ! membrane
shell,top
prns,s,prin     ! membrane + bending
shell,bot
prns,s,prin     ! membrane + bending
```

```
nall
eall

/com stress results in center pipe
esel,s,type,,2   ! center pipe
shell,mid
prns,s,prin      ! membrane
shell,top
prns,s,prin      ! membrane + bending
shell,bot
prns,s,prin      ! membrane + bending
nall
eall

/com stress results in outer (shell) plate
esel,s,type,,3   ! bottom plate
shell,mid
prns,s,prin      ! membrane
shell,top
prns,s,prin      ! membrane + bending
shell,bot
prns,s,prin      ! membrane + bending
nall
eall

/com stress results in stiffener plate
esel,s,type,,4   ! bottom plate
shell,mid
prns,s,prin      ! membrane
shell,top
prns,s,prin      ! membrane + bending
shell,bot
prns,s,prin      ! membrane + bending

/com reaction forces
nall
eall
prrs

/com stress and geometry plots **********************************************
nall
eall
/show,scrap4a,pic,1
/vup,,z
/view,,-1,-1,.5
/dscale,,1

eplot            ! element plot
/EDGE,ALL,1,45      ! turn off element lines
plns,s,int

/view,1,,,1         ! view from top
/vup,,y
/pbc,u,1            ! show translational restraints
eplot
/vup,,z
```

```
/view,,-1,-1,.5
eplot
/pbc,u,0          ! hide translational restraints

esel,s,type,,1    ! bottom plate
/view,1,,,1
/vup,,y
plns,s,int

esel,s,type,,2    ! center pipe
/view,1,1
/vup,,z
plns,s,int
/ZOOM,1,6.2204,-0.14295,20.764,1.0978
/zoom,,off

esel,s,type,,3    ! outer shell
plns,s,int

esel,s,type,,4    ! stiffener plate
/view,,,-1
plns,s,int

nall
eall

fini
exit
```

COMPUTER RUN COVER SHEET

Project Number:	KH-8009-8
Computer Code:	ANSYS®-PC
Software Version:	5.0A
Computer System:	MS-DOS, Pentium® Processor
Computer Run File Number:	KH-8009-8-07
Unique Computer Run File Name:	Scrap4a.out
Run Description:	Stress Analysis of the Mark IV Scrap Basket
Run Date/Time:	16 January 1997/11:09:56am

Bob V. Winkel 4/18/97

Prepared By: Bob V. Winkel Date

Checked By: Joe Nichols 4/17/97 Date

PARSONS	CALCULATION PACKAGE	FILE NO: KH-8009-8-08 DOC NO: HNF-SD-SNF-DR-003 Rev. 0, Appendix 10 PAGE 1 of 34

PROJECT NAME:	CLIENT:
MCO Final Design	Duke Engineering Services Hanford, Inc.

CALCULATION TITLE:

STRESS ANALYSIS OF THE SHIELD PLUG INTERFACE COMPONENTS

PROBLEM STATEMENT OR OBJECTIVE OF CALCULATION:

PERFORM A STRESS ANALYSIS OF THE SHIELD PLUG INTERFACE COMPONENTS (PROCESS VALVES, PROCESS PORT COVER PLATES AND BOLTS, PROCESS FILTER ATTACHMENT WELDS, RUPTURE DISC HOLDERS) IN ACCORDANCE WITH REVISION 3 OF THE MCO PERFORMANCE SPECIFICATION. TORQUE RECOMMENDATIONS FOR THE COVER PLATE BOLTS AND PROCESS VALVES ARE ALSO ADDRESSED.

THREE LOADING CONDITIONS ARE CONSIDERED:

1. DESIGN PRESSURE OF 150 PSIG
2. PRELOAD TORQUE ON COVER PLATE BOLTS AND PROCESS VALVES
3. THERMAL EXPANSION DIFFERENCES AT DESIGN TEMPERATURE OF 375°C
4. CRITICAL DROP LOADING (HORIZONTAL) OF 101 G'S

CRITERIA ARE BASED ON SUBSECTION NB OF SECTION III OF THE ASME CODE.

Of Parsons 4/18/97

DOCUMENT REVISION	AFFECTED PAGES	REVISION DESCRIPTION	PREPARED BY INITIALS / DATE	CHECKED BY INITIALS / DATE	APPROVED BY INITIALS / DATE
0	1-35	Initial Issue	Bob Winkel BW 4-17-97	Charles Temus 4/18/97	Charles Temus 4/18/97

TABLE OF CONTENTS

1. INTRODUCTION 5

2. REFERENCES 5

3. ASSUMPTIONS 6

4. GEOMETRY 6

5. MATERIAL PROPERTIES 8

6. ACCEPTANCE CRITERIA 10

7. LOAD CONDITIONS AND COMBINATIONS 11

8. STRESS ANALYSIS CALCULATIONS 11

8.1 Process Port Cover Plate and Bolts 11
8.1.1 Cover Plate Bolts 13
8.1.2 Cover Plate Evaluation 16

8.2 Process Valve Plug Evaluation 17

8.3 Rupture Disc Holder 25

8.4 Torque Recommendations 31

8.5 Process Filter Attachment Welds 33

LIST OF FIGURES

FIGURE 1. SHIELD PLUG INTERFACE COMPONENT GEOMETRY. 7

LIST OF TABLES

TABLE 1. MATERIAL LISTING FOR SHIELD PLUG INTERFACE COMPONENTS 8
TABLE 2. ASME CODE MATERIAL PROPERTIES FOR TYPE 304L STAINLESS STEEL. 9
TABLE 3. ASME DESIGN TEMPERATURE MATERIAL PROPERTIES FOR COVER PLATE BOLTS AND PROCESS VALVES. 9

1. INTRODUCTION

This calculation documents the evaluation of the MCO process port cover plates, cover plate bolts, process valves, and the process filter attachment welds. The special process valves containing rutpure discs are included in the evaluation, as well as the rupture disc unit which will be inserted into the canister cover. The structural adequacy evaluation is based upon Subsection NB of Section III of the ASME Code (Reference 3). Component loading includes preload from torquing of bolts and process valve bodies, design pressure, and drop loading.

2. REFERENCES

1. DE&S, 1997, *Performance Specification for the Spent Nuclear Fuel Multi-Canister Overpack*, WHC-S-0426, Rev. 3, Duke Engineering and Services Hanford, Richland, Washington.

2. ASME, 1995, *ASME Boiler and Pressure Vessel Code, Section II, Materials, Part D--Properties*, American Society of Mechanical Engineers, New York, New York.

3. ASME, 1995, *ASME Boiler and Pressure Vessel Code, Section III, Subsection NB*, American Society of Mechanical Engineers, New York, New York.

4. Roark, R. J. and Young, W. C., 1975, *Formulas for Stress and Strain*, 5th Edition, McGraw-Hill, New York, New York.

5. Baumeister, T., editor, 1967, *Standard Handbook for Mechanical Engineers,* 7th Edition, McGraw-Hill, New York, New York.

6. Parsons, 1997, "Stress Analysis of the Mark 1A Storage and Scrap Baskets," Calculation No. KH-8009-8-05, Parsons Infrastructure and Technology Group, Inc., Richland, Washington.

7. Bickford, J. H., 1990, *An Introduction to the Design and Behavior of Bolted Joints,* 2nd Edition, Marcel Dekker, Inc., New York City, New York.

8. Shigley, J. E. and Mischke, C. R., *Mechanical Engineering Design*, 5th Edition, McGraw-Hill, New York, New York.

9. IFI, 1988, *Fastener Standards*, 6th Edition, Industrial Fasteners Institute, Cleveland, Ohio.

10. Horton, H. L., 1974, Machinery's Handbook, 19th Edition, Industrial Press, Inc., New York, New York.

3. ASSUMPTIONS

1. Preloads from torquing the cover plate bolts and process valves are assumed to be accurate to within +30% and -35%. This range is assumed to include the standard preload/torque uncertainties, including operator and tool inaccuracies. A "Never-Sieze" lubricant is assumed for the preload/torque calculations, using "Nut-Factor" values from Reference 7. It is conservatively assumed that the maximum temperature during torque application (insertion and removal) is the design temperature of 375°C. It is also assumed that the Reference 7 nut factors are not affected by temperature. As discussed in Section 8.1.4, the adequacy of the uncertainty range and the mean nut factor, for the cover plate bolts and process valves must be verified by test.

2. It is assumed that the threaded process valve bodies can be appropriately evaluated as bolts, relative to the ASME Code design stress limits.

3. It is assumed that the torquing tool, used for inserting and preloading the rupture disc type process plug, will extend beyond the holes in the hex head. That is, the hex head minimum cross section, at the vent holes, will not experience the full torque during torquing operations.

4. Some of the dimensions of the rupture disc valve (e.g. rupture disc outside diameter) are based upon a specific rupture disc manufacturer. Since the dimensions are vendor dependent, some of the calculations may need to be modified, depending on the final rupture disc manufacturer selected.

5. Other assumptions as noted within the calculation documentation.

4. GEOMETRY

The geometry of the shield plug interface components are defined on the assembly drawing (H-2-828041), the shield plug drawing (H-2-828045), the process plug valve drawing (H-2-828047), the cover plate/bolt drawing (H-2-828048), and the process filter drawing (H-2-828049). The structural components are identified in Figure 1. There are four process ports in the shield plug. The structural components of the port closures are identical, except some of the cover plates have four bolts and some have five. Only the weaker four-bolt

configurations are analyzed in this report. The purpose of the cover plates is to provide secondary containment for the process valve seals, and to protect the valves during handling operations.

The top of the process filter valve bodies consists of a hex head used for torquing the threaded valve bodies into the four shield plug port holes. Sealing for both the process valves and the cover plates is achieved using a C-seal requiring a minimum seating load of 300 lb/in.

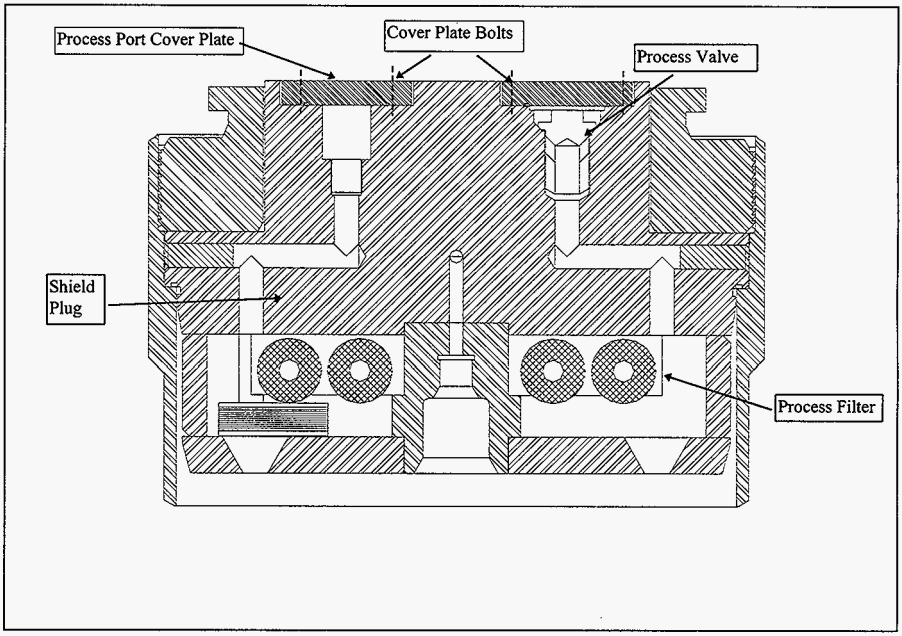

Figure 1. Shield Plug Interface Component Geometry.

The process filter is welded to the bottom of the shield plug as shown. The filter details are not specified by the drawing because it is being supplied by others. Only the 1/8-in. filter

attachment welds are evaluated by this calculation. A bounding filter assembly weight of 50 lb is specified by the Reference 1 Performance Specification.

The process valve bodies are identical except for the type that contain rupture discs. The rupture disc type valve bodies are in two pieces which are welded together by a full-circumference structural groove weld. The critical loading for this weld is the torque applied during insertion and removal.

In addition to the process valve design which contains a rupture disc, there is a rupture disc pressure relief device (hereafter referred to as "rupture disc holder") which can be inserted either into Port 1 or the canister cover. The threaded portion of this pressure relief component is smaller (3/4-in. NPSM thread) than the 1-7/8-in process valve threads and is also addressed in the calculations below.

5. MATERIAL PROPERTIES

The materials included in the shield plug interface components are listed in Table 1. The structural properties of interest for 304L stainless steel are provided in Table 2. The cover plate bolt and process valve material properties at the MCO design temperature of 375°C are listed in Table 3. It is noted that the process valves and rupture disc holder are constructed from 304LN stainless steel, which is a standard ASME pressure boundary material, but 304LN is not listed under the ASME bolting material section (Section II, Part D, Table 4). Since the valve bodies function much like a bolt (external threads, hex head, provide preload to seal), they were evaluated using ASME rules for bolts. The 304LN S_m value listed in the table is the pressure vessel material value which is essentially twice the bolt material allowable. This difference is accounted for in the stress calculations.

Since the process filters are being designed by others, process filter material properties are not addressed. The process filters will be welded to the 304L shield plugs. Therefore, the 304L base material allowables, Table 2, were applied to the attachment welds.

Table 1. Material Listing for Shield Plug Interface Components

Component	Material	ASME Spec No.
Shield Plug, Process Port Cover Plate	304L SS	SA-182
Cover Plate Bolts	22Cr-13Ni-5Mn	SA-193-B8R
Process Valves & Rupture Disc Holder	304LN SS	SA-479 (Bar Stock)

Table 2. ASME Code Material Properties for Type 304L Stainless Steel.

Temperature °F	Temperature °C	E ble TM-1, Group	S_m Table 2A, p.322	S_y Table Y-1, p.524	S_u Table U, P. 441
-20	--	--	16.7 ksi	25.0 ksi	70.0 ksi
70	--	28.3E+06	--	--	--
100	--	--	16.7 ksi	25.0 ksi	70.0 ksi
200	--	27.6E+06	16.7 ksi	21.3 ksi	66.2 ksi
212	100	27.5E+06	16.7 ksi	21.0 ksi	65.6 ksi
300	--	27.0E+06	16.7 ksi	19.1 ksi	60.9 ksi
700	--	24.8E+06	13.5 ksi	14.9 ksi	56.2 ksi
707	375	24.8E+06	13.5 ksi	14.9 ksi	56.2 ksi
750	--	--	13.3 ksi	14.7 ksi	55.9 ksi
800		24.1E+06	--	--	--

s4allow.xls

Notes 1: Underlined values determined by linear interpolation, all other values taken from Section II, Part D of the ASME Code.
2: Value of E taken from Table TM-1 for Material Group G.

Table 3. ASME Design Temperature Material Properties for Cover Plate Bolts and Process Valves.

Material	Elastic Modulus, psi	Mean Thermal Expansion Coefficient (70-707°F, in/in/°F)	S_m, psi
SA 193-B8 Cover Plate Bolts	26.2×10^6	9.16×10^{-6}	12,100
304LN Process Valves & Rupture Disc Holder	24.8×10^6	9.77×10^{-6}	15,900

6. ACCEPTANCE CRITERIA

For the process port valves, cover plates, and cover plate bolts, the critical load condition is the design condition loading: 150 psi design pressure @ 375°C combined with the preload torque loading. (Note: Near the end of the MCO design process, the design condition was changed to two temperature/pressure combinations-- 150 psi @ 200°C and 75 psi @ 375°C. In this appendix, the conservative envelope of 150 psi @ 375°C is conservatively used.) Torsional stresses in the process valve bodies are also addressed. It is conservatively assumed that the preload is applied at the full design temperature, since the valves will be tightened and loosened during processing operations. For the process filter attachment welds, the critical loading is the 101g horizontal drop.

Since the Reference 1 Performance Specification specifies that the MCO is to be designed to the intent of Subsection NB of the ASME Code, the ASME Code requirements are used as the acceptance criteria for the shield plug interface components. All of the interface components are part of the MCO pressure boundary with the exception of the process filter attachment welds. For the process filter attachment welds, it is assumed that the inspection will be limited to a visual examination and appropriate weld quality factors from Subsection NG are applied. The full design temperature allowables are conservatively applied to the attachment weld evaluation.

As mentioned in Sections 3 and 5, since the process valves are constructed in the form of a bolt, and are required to maintain the preload on the pressure boundary seal, ASME bolt stress limits are applied to the process valve bodies. Since the 304LN valve plug material is not listed in the bolt section of the Code material properties, Table 4 of Reference 2, the appropriate bolt-type Sm was derived using Article III-2120 from Section III of the ASME Code (1/3 yield).

A rupture disc is included in one of the process filter designs and in the canister cover, which results in a two-piece design assembled with a seal weld at the edge of the disc and a structural connection weld. The structural weld is subjected to both torque loading and the design pressure. The weld is a groove weld which is questionable relative to the ASME Subsection NB weld configuration requirements. The Subsection NG weld quality factors are applied to the rupture disc valve structural weld, assuming a surface only dye penetrant examination. As indicated in the calculations below, the resulting design margin is large, which minimizes potential concerns relative to the structural adequacy of the rupture disc valve structural weld.

7. LOAD CONDITIONS AND COMBINATIONS

It is expected that the initial attachment of the process valves and cover plates to the shield plug will be conducted at room temperature. For later processing operations, torquing of both the cover plate bolts and process valves may occur at higher temperatures. To cover the possibility of torquing operations at higher temperatures, it is conservatively assumed that torquing could occur at the full design temperature of 375°C. Another conservative assumption is that the maximum torque to the process valves could occur simultaneously with the full design pressure, e.g. when the break away torque is applied during valve opening.

As stated in Section 6, the critical loading for the process valves and cover plates is the torquing preload combined with the design pressure and temperature. Due to the relative size of these components, the vertical drop inertia loading is less than the pressure loading. For the more severe horizontal drop, the parts bear against the sides of shield plug holes (cover plate sits in a recess). Appendix F of the ASME Code does not limit bearing stresses. Thus, only the filter attachment welds are evaluated for the drop loading.

8. STRESS ANALYSIS CALCULATIONS

The shield plug interface components structural evaluations were limited to hand calculations. Calculation details for each component follows below.

8.1 Process Port Cover Plate and Bolts

Calculation Parameters:

$n_b = 4$ Minimum number of bolts

$A_b := \frac{\pi}{4} \cdot (.490 \cdot in)^2$ Bolt area above threads

$A_b = 0.189 \cdot in^2$

$A_{et} := 0.998 \cdot \frac{in^2}{in}$	5/8-11 UNC thread stripping area, Reference 9
$A_{it} := 1.42 \cdot \frac{in^2}{in}$	Internal thread stripping area, Reference 9
$l_{thread} := 0.75 \cdot in$	Bolt thread length
$d_s := 3.555 \cdot in$	Outside diameter of seal
$t_p := 1.00 \cdot in$	Plate thickness
$d_b := 0.625 \cdot in$	Nominal bolt diameter
$d_{bc} := 4.375 \cdot in$	Diameter of bolt circle
$f_{sp} := 300 \cdot \frac{lb}{in}$	Minimum seal preload, see Appendix 14
$pres := 150 \cdot \frac{lb}{in^2}$	Design pressure
$S_{mb} := 12100 \cdot \frac{lb}{in^2}$	SA 193 B8R bolt material Sm, design temp. = 707 degF
$S_{mp} := 13500 \cdot \frac{lb}{in^2}$	304L plate, design temperature
$\alpha_p := 9.70 \cdot 10^{-6} \cdot \frac{in}{in \cdot R}$	304L mean expansion coefficient, 70 to 707 degF
$\alpha_b := 9.16 \cdot 10^{-6} \cdot \frac{in}{in \cdot R}$	SA 193 Gr B8R bolt expansion coefficient, 70 - 707 degF
$E_b := 26.2 \cdot 10^6 \cdot \frac{lb}{in^2}$	SA 193 Gr B8R bolt, Elastic Modulus, 707 degF
$K_{min} := 0.11$	Minimum nut factor, "Never-Seize" lubricant, Table 5.1 of Reference 7
$K_{max} := 0.21$	Maximum nut factor, Reference 7

$K_{mean} = 0.17$ Mean nut factor, Reference 7.

Note that $K_{max} = K_{mean} + 24\%$ & $K_{min} = K_{mean} - 35\%$, which is close to the 30% variance frequently recommended for bolt/preload predictions (Reference 7). For establishing the minimum torque required for seal seating, a K_{mean} + 30% was conservatively used.

8.1.1 Cover Plate Bolts

Bolt Area Requirement (See Appendix E, ASME Code):

Appendix E requires that a bolt have sufficient area to carry the required seal load plus the pressure loading.

$H := \frac{\pi}{4} \cdot d_s^2 \cdot pres$ Pressure load

$H = 1.489 \cdot 10^3 \cdot lb$

$H_p := \pi \cdot d_s \cdot f_{sp}$ Minimum preload

$H_p = 3.351 \cdot 10^3 \cdot lb$

$A_{req} := \frac{H + H_p}{S_{mb}}$

$A_{req} = 0.4 \cdot in$

$Ratio := \frac{A_{req}}{n_b \cdot A_b}$

$Ratio = 0.53$ Adequate Bolt Area for preload + pressure

Check Bolt Adequacy for In-Service Loads:

The ASME Code requires that the maximum in-service bolt stress not exceed 2 Sm.

1) Thermal Loading

$$\sigma_{bth} := E_b \cdot (\alpha_p - \alpha_b) \cdot (707 \cdot R - 70 \cdot R)$$

$$\sigma_{bth} = 9.012 \cdot 10^3 \cdot \frac{lb}{in^2}$$ Preload increase due to relative thermal growth

2) Maximum Preload

Torque, per bolt, required to assure required minimum preload (f_{sp}) on seal:

$$T_{in} := \frac{f_{sp} \cdot \pi \cdot d_s}{n_b} \cdot K_{mean} \cdot 1.3 \cdot d_b$$

$$T_{in} = 9.641 \cdot lb \cdot ft$$

Maximum preload per bolt for a torque of T_{in}:

$$F_{pmax} := \frac{T_{in}}{K_{min} \cdot d_b}$$

$$F_{pmax} = 1.683 \cdot 10^3 \cdot lb$$

$$\sigma_{bp} := \frac{F_{pma}}{A_b}$$

$$\sigma_{bp} = 8.924 \cdot 10^3 \cdot \frac{lb}{in^2}$$

Bolt stress from pressure loading (conservatively assume bolts carry entire pressure load):

$$\sigma_{bpres} := \frac{H}{n_b \cdot A_b}$$

$$\sigma_{bpres} = 1.974 \cdot 10^3 \cdot \frac{lb}{in^2}$$

Maximum combined in-service stress in bolts:

$$\sigma_{btot} := \sigma_{bp} + \sigma_{bpres} + \sigma_{bth}$$

$$\sigma_{btot} = 1.991 \cdot 10^4 \cdot \frac{lb}{in^2}$$

Comparing the total in-service stress to the allowable of $2S_m$:

$$Ratio := \frac{\sigma_{btot}}{2 \cdot S_m}$$

$Ratio = 0.823$ Cover bolts OK for in-service loading

CHECK BOLT THREAD STRIPPING:

Since the XM-19 bolt strength is much higher than the 304L shield plug strength, the shield plug internal threads control.

$S_m := 13500 \cdot \frac{lb}{in^2}$ Shield plug membrane stress allowable

$\sigma_{thread} := \frac{2 \cdot S_{mb} \cdot A_b}{A_{it} \cdot l_{thread}}$ Thread stress, bolt @ allow. stress

$$\sigma_{thread} = 4.285 \cdot 10^3 \cdot \frac{lb}{in^2}$$

$$Ratio := \frac{\sigma_{thread}}{0.6 \cdot S_m}$$

$$Ratio = 0.529$$

8.1.2 Cover Plate Evaluation

Consider a simply-supported circular plate having a diameter equal to the bolt-circle diameter (Reference 4, Table 24):

$$\nu := 0.3$$

$$M_{max} := \frac{pres \cdot \left(\frac{d_{bc}}{2}\right)^2 \cdot (3 + \nu)}{16}$$

$$M_{max} = 148.041 \cdot lb \cdot \frac{in}{in}$$

$$\sigma_p := 6 \cdot \frac{M_{max}}{t_p^2}$$

$$\sigma_p = 888.245 \cdot \frac{lb}{in^2}$$

$$Ratio := \frac{\sigma_p}{1.5 \cdot S_m}$$

$$Ratio = 0.044$$

Thus, the cover plate has a large margin, relative to Code allowables.

8.2 Process Valve Plug Evaluation

The process valve plug is threaded and was evaluated using bolt requirements (NB-3230).

Parameter Definitions:

$d_p := 1.875 \cdot in$ Valve nominal diameter (1 7/8-12 UN-2A Thread)

$l_{thread} := 2.266 \cdot in$ Valve thread engagement length

$A_{vsol} := 2.53 \cdot in^2$ Tensile area of valve/bolt (solid), Reference 10

$$d_{eff} := \sqrt{\frac{A_{vsol} \cdot 4}{\pi}}$$

$d_{eff} = 1.795 \cdot in$ Valve plug effective outside diameter

$d_h := 0.688 \cdot in$ Valve plug radial hole diam. (3 holes @ 120 degrees)

$d_i := 1.00 \cdot in$ Valve plug inside diameter

$$A_{vnet} := A_{vsol} - \frac{\pi \cdot d_i^2}{4} - 3 \cdot d_h \cdot \left(\frac{d_{eff} - d_i}{2} \right)$$

$A_{vnet} = 0.924 \cdot in^2$ Valve plug net area @ radial holes

$$S_{mv} := 5856 \cdot \frac{lb}{in^2}$$

S_{mv} = valve plug design temperature material allowable, SA-479, 304LN divided by 3 to correspond to bolt S_m value.

$E_v := 24.8 \cdot 10^6 \cdot \frac{lb}{in^2}$ Valve plug modulus of elasticity

$d_s := 2.00 \cdot in$ Conservative seal diameter

Required Valve Plug Area:

Per ASME Code requirements, bolt (valve plug) area must be sufficient to carry the required seal load plus the full pressure load.

$H := \frac{\pi}{4} \cdot d_s^2 \cdot pres$ Pressure load

$H = 471.239 \cdot lb$

$H_p = \pi \cdot d_s \cdot f_{sp}$ Minimum preload

$H_p = 1.885 \cdot 10^3 \cdot lb$

$A_{req} := \frac{H + H_p}{S_{mv}}$

$A_{req} = 0.402 \cdot in^2$

$Ratio := \frac{A_{req}}{A_{vnet}}$

$Ratio = 0.435$ Net area of plug is adequate for axial loading

Check Valve Plug Adequacy for In-Service Loads

1) Thermal Loading

There is no thermal loading in the valve plug since the expansion coefficients for the valve and shield plug are the same.

2) Maximum Preload

Torque required to maintain required minimum preload (f_{sp}) on seal:

$$T_{in} := \left(f_{sp} \cdot \pi \cdot d_s\right) \cdot K_{mean} \cdot 1.3 \cdot d_p$$

$$T_{in} = 65.09 \cdot lb \cdot ft$$

Maximum preload:

$$F_{pmax} := \frac{T_{in}}{K_{min} \cdot d_p}$$

$$F_{pmax} = 3.787 \cdot 10^3 \cdot lb$$

$$\sigma_{bp} := \frac{F_{pmax}}{A_{vnet}}$$

$$\sigma_{bp} = 4.097 \cdot 10^3 \cdot \frac{lb}{in^2}$$

Plug stress from pressure loading (conservatively assume plug carries entire pressure load):

$$\sigma_{bpres} := \frac{H}{A_{vnet}}$$

$$\sigma_{bpres} = 509.794 \cdot \frac{lb}{in^2}$$

Maximum combined in-service stress in plug:

$$\sigma_{btot} := \sigma_{bp} + \sigma_{bpres}$$

$$\sigma_{btot} = 4.607 \cdot 10^3 \cdot \frac{lb}{in^2}$$

Comparing the total in-service stress to the allowable of $2S_m$:

$$Ratio := \frac{\sigma_{btot}}{2 \cdot S_{mv}}$$

$Ratio = 0.393$ Process valve plug meets Code bolt stress requirements

Because the valve plug net area is small relative to the thread engagement length, the axial stress obviously controls relative to thread stripping. Therefore, thread stripping calculations were not performed.

Check Valve Plug Adequacy for Torque Loading:

Conservatively assume that the minimum cross-section of the valve plug experiences the full torque. The polar moment of inertia can be approximated from $3(A_{net}/3)d_c^2$, where d_c is the midwall radius:

$$d_{eff} = 1.795 \cdot in$$

$$J_{net} := 3 \cdot \left(\frac{A_{vnet}}{3}\right) \cdot \left(\frac{\frac{d_{eff}}{2} + \frac{d_i}{2}}{2}\right)^2$$

$$J_{net} = 0.451 \cdot in^4$$

For comparison, check J for section w/o holes:

$$J := \frac{\pi}{32}\cdot\left(d_{eff}^4 - d_i^4\right)$$

$$J = 0.921 \cdot in^4$$

J_{net} appears to be overly conservative (ignores centroidal inertia). A more reasonable value can be obtained from Reference 8, p. 752, for a hollow shaft with two holes:

$d_h = 0.688 \cdot in$ Hole diameter

$d_{heff} := d_h\cdot\sqrt{1.5}$

$d_{heff} = 0.843 \cdot in$ Two-hole equivalent diameter

$$\frac{d_{heff}}{d_{eff}} = 0.469$$

$$\frac{d_i}{d_{eff}} = 0.557$$

From Table A-16 of Reference 8, an effective J coefficient, A, was obtained:

$A := 0.58$ Approximate, use 0.5

$$\tau := \frac{T_{in}\cdot\frac{d_{eff}}{2}}{0.5\cdot J}$$

$$\tau = 1.523\cdot 10^3 \cdot \frac{lb}{in^2}$$

$\tau_{allow} := 0.6\cdot 2\cdot S_{mv}$ Pure shear allowable, Sm doubled for bolt in-service stress

$$Ratio := \frac{\tau}{\tau_{allow}}$$

$Ratio = 0.217$ Torsional stress relatively small

Although the torsional stress is small, it is additive to the preload stress and potentially the pressure stress. Combining the valve plug axial and torsional stresses follows below.

$$\sigma_1 := \frac{\sigma_{btot}}{2} + \sqrt{\frac{\sigma_{btot}^2}{4} + \tau^2}$$

$$\sigma_1 = 5.065 \cdot 10^3 \cdot \frac{lb}{in^2}$$

$$\sigma_2 := \frac{\sigma_{btot}}{2} - \sqrt{\frac{\sigma_{btot}^2}{4} + \tau^2}$$

$$\sigma_2 = -457.983 \cdot \frac{lb}{in^2}$$

$$P_m := \sigma_1 - \sigma_2$$

$$P_m = 5.523 \cdot 10^3 \cdot \frac{lb}{in^2}$$

$$\text{Ratio} := \frac{P_m}{2 \cdot S_{mv}}$$

$$\text{Ratio} = 0.472$$

Thus, the valve plug is adequate for a combined axial stress (preload/pressure) and torsional stress (65 ft-lb torque). Note from Section 8.4, a maximum torque of 105 ft-lbs is recommended, which increases the above stress ratio to 0.74, indicating the valve plug is adequate for the maximum torque as well.

Rupture Disc Process Plug Torque Stress:

The hex head of the process plug, which contains the rupture disc, is hollow which introduces the possibility of a torque overstress, which does not exist for the solid hex heads of the standard process valves. The hollow hex head torsional stress evaluation follows below. For analysis simplification, the outside surface was assumed to be round, conservatively using the minimum diameter (flat-to-flat).

$d_o := 1.312 \cdot in$

$d_i := 1.1 \cdot in$

$J := \frac{\pi}{32} \cdot \left(d_o^4 - d_i^4\right)$

$J = 0.147 \cdot in^4$

$T_{max} := 105 \cdot ft \cdot lb$ Maximum torque (Section 8.4)

$\tau := \frac{T_{max} \cdot \frac{d_o}{2}}{J}$

$\tau = 5.617 \cdot 10^3 \cdot \frac{lb}{in^2}$

$\tau_{allow} := 2 \cdot 0.6 \cdot S_{mv}$

$\tau_{allow} = 7.027 \cdot 10^3 \cdot \frac{lb}{in^2}$

$Ratio := \frac{\tau}{\tau_{allow}}$

$Ratio = 0.799$ Hex head torsional stress OK

Weld Sizing for Rupture Disc Process Valve

The process valve which contains a rupture disc, requires a two-piece construction connected with a structural weld. This weld potentially carries both the pressure loading and the torsional stress during torquing (removal).

$d_w := 2.00 \cdot in$ Structural weld diameter

$T_{max} := 105 \cdot ft \cdot lb$ Maximum preload torque (above)

Try a 1/8-in groove weld:

$t_w := 0.125 \cdot in$

$f_w := \frac{T_{max}}{\pi \cdot \frac{d_w^2}{2}}$ Circumferential force/in @ weld

$f_w = 200.535 \cdot \frac{lb}{in}$

$\tau_w := \frac{f_w}{t_w}$ Circumferential shear stress in weld

$\tau_w = 1.604 \cdot 10^3 \cdot \frac{lb}{in^2}$ Weld shear stress

$n := 0.4$

n = groove weld quality factor per ASME NG-3352-1 (Surface PT inspection)

$ratio := \frac{\tau_w}{0.6 \cdot 2 \cdot S_{mv} \cdot n}$ Stress ratio using 0.6x2xSmv allow. per ASME NB-3227.2

$ratio = 0.571$

The groove weld also carries the axial pressure loading.

$pres = 150 \cdot \frac{lb}{in^2}$

$$d_{seal} := 1.37 \cdot in$$

$$\tau_{wp} := \frac{pres \cdot \pi \cdot \frac{d_{seal}^2}{4}}{\pi \cdot d_w \cdot t_w}$$

$$\tau_{wp} = 281.535 \cdot \frac{lb}{in^2}$$

Conservatively adding the torsional and axial shear stresses:

$$\tau_{tot} := \tau_w + \tau_{wp}$$

$$ratio := \frac{\tau_{tot}}{0.6 \cdot 2 \cdot S_{mv} n}$$

$ratio = 0.671$ Weld OK for torsion + pressure

8.3 Rupture Disc Holder

The rupture disc pressure relief device which may be inserted into both Port 1 and the canister cover, has a specified thread of 3/4" NPSM. The rupture disc holder body is evaluated below, following a similar procedure as for the process valve plug. One significant difference is that the rupture disc holder will be torqued at room temperature only and torsion will not be combined with pressure.

Parameter Definitions:

$d_b := 1.0 \cdot in$ Thread area nominal diameter (3/4-in NPSM)

$l_{thread} := 0.79 \cdot in$ Valve thread engagement length

$d_o := 0.982 \cdot in$ Min. pitch diameter, p. 1777 of Reference 10

$d_i := 0.75 \cdot in$ Inside diameter, threaded region

$$A := \frac{\pi}{4}\cdot\left(d_o^2 - d_i^2\right)$$

$A = 0.316 \cdot in^2$ Cross sectional area, threaded region

Body design temperature material allowable, SA-479, 304LN yield strength divided by 3 to correspond to bolt S_m value:

$$S_{mv} := 5856\cdot\frac{lb}{in^2}$$

$d_s := 1.158 \cdot in$ Seal diameter

Required Holder Body Area:

$H := \frac{\pi}{4}\cdot d_s^2 \cdot pres$ Pressure load

$H = 157.979 \cdot lb$

$H_p := \pi \cdot d_s \cdot f_{sp}$ Minimum preload

$H_p = 1.091 \cdot 10^3 \cdot lb$

$$A_{req} := \frac{H + H_p}{S_{mv}}$$

$A_{req} = 0.213 \cdot in^2$

$$Ratio := \frac{A_{req}}{A}$$

$Ratio = 0.676$ Body area is adequate for preload + pressure

Check Holder Body Adequacy for In-Service Loads

1) Thermal Loading

No thermal loading (expansion coefficients are same)

2) Maximum Preload

Torque required to achieve required minimum preload (f_{sp}) on seal:

$$T_{in} := \left(f_{sp} \cdot \pi \cdot d_s\right) \cdot K_{mean} \cdot 1.3 \cdot d_b$$

$$T_{in} = 20.1 \cdot lb \cdot ft$$

Maximum preload for T_{in} torque:

$$F_{pmax} := \frac{T_{in}}{K_{min} \cdot d_b}$$

$$F_{pmax} = 2.193 \cdot 10^3 \cdot lb$$

$$\sigma_{bp} := \frac{F_{pmax}}{A}$$

$$\sigma_{bp} = 6.948 \cdot 10^3 \cdot \frac{lb}{in^2}$$

Body axial stress from pressure loading (conservatively assume body carries entire pressure load):

$$\sigma_{bpres} := \frac{H}{A}$$

$$\sigma_{bpres} = 500.579 \cdot \frac{lb}{in^2}$$

Maximum combined in-service stress in holder body:

$$\sigma_{btot} = \sigma_{bp} + \sigma_{bpre}$$

$$\sigma_{btot} = 7.448 \cdot 10^3 \cdot \frac{lb}{in^2}$$

Comparing the total in-service stress to the allowable of $2S_m$:

$$Ratio := \frac{\sigma_{btot}}{2 \cdot S_{mv}}$$

$$Ratio = 0.636$$

Body meets Code bolt stress requirements for the seal seating load + pressure

Check Thread Stripping in Holder Body:

$T_{max} := 35 \cdot ft \cdot l$ Maximum recommended torque, Section 8.4

$$F_{pmax} := \frac{T_{max}}{K_{min} \cdot d_b}$$

$$F_{pmax} = 3.818 \cdot 10^3 \cdot lb$$

$A_{et} := 1.66 \cdot \frac{in^2}{in}$ Approximate external thread stripping area (1" bolt)

$l_{engage} := 0.75 \cdot in$ Thread engagement length

$$\tau_s := \frac{F_{pmax}}{A_{et} \cdot l_{engage}}$$

$$\tau_s = 3.067 \cdot 10^3 \cdot \frac{lb}{in^2}$$

$$\text{Ratio} := \frac{\tau_s}{0.6 \cdot 2 \cdot S_{mv}}$$

$\text{Ratio} = 0.256$ Thread stripping OK

Check Disc Holder Adequacy for Torque Loading:

Conservatively assuming that the minimum cross-section of the body experiences the full torque, find the allowable torque which will bring the holder body to the allowable stress. Assume that the maximum torque will be applied only at room temperature.

$$J := \frac{\pi}{32} \cdot \left(d_o^4 - d_i^4\right)$$

$J = 0.06 \cdot in^4$

$T_{max} := 50 \cdot ft \cdot lb$ Maximum torque (iteratively obtained)

$$\tau := \frac{T_{max} \cdot \frac{d_o}{2}}{J}$$

$\tau = 4.891 \cdot 10^3 \cdot \frac{lb}{in^2}$

Combining torsional stress with preload stress:

$$F_{pmax} := \frac{T_{max}}{K_{min} d_b}$$

$F_{pmax} = 5.455 \cdot 10^3 \cdot lb$

$$\sigma_{bp} := \frac{F_{pma}}{A}$$

$\sigma_{bp} = 1.728 \cdot 10^4 \cdot \frac{lb}{in^2}$

$\sigma_{btot} := \sigma_{bp}$

$$\sigma_1 := \frac{\sigma_{btot}}{2} + \sqrt{\frac{\sigma_{btot}^2}{4} + \tau^2}$$

$$\sigma_1 = 1.857 \cdot 10^4 \cdot \frac{lb}{in^2}$$

$$\sigma_2 := \frac{\sigma_{btot}}{2} - \sqrt{\frac{\sigma_{btot}^2}{4} + \tau^2}$$

$$\sigma_2 = -1.288 \cdot 10^3 \cdot \frac{lb}{in^2}$$

$$P_m := \sigma_1 - \sigma_2$$

$$P_m = 1.986 \cdot 10^4 \cdot \frac{lb}{in^2}$$

$$S_{mv} := 10000 \cdot \frac{lb}{in^2}$$ One third of room temperature yield strength

$$Ratio := \frac{P_m}{2 \cdot S_m}$$

$Ratio = 0.993$ Thus, a torque of 50 ft-lbs is the maximum allowed.

Check rupture disc holder weld:

The specified rupture disc holder weld is a circumferential 1/8-in. groove weld at a diameter of 1.75 in. The weld size is equal to the rupture disc process valve. Since the maximum allowable torque (50 ft-lbs) is approximately half of the 105 ft-lb maximum for the process valve, and since the rupture disc holder will only be torqued at room temperature, the weld is structurally adequate by comparison.

8.4 Torque Recommendations

The minimum torque values, T_{in}, required to seat the seals is established above for the cover plate bolts, process valves, and rupture disc holder. It is emphasized that preload torque relationship is conditional on the adequacy of the "nut factors" extracted from Reference 7, assuming a "Never Sieze" lubricant. Reference 7, in turn, emphasizes that nut factors "can only be determined experimentally, and experience shows that we really have to redetermine it for each new application. Even then it is not a single number. Experience shows that for accurate prediction we have to make a number of experiments to determine the mean K, standard deviation, etc. Having done this, however, we can indeed predict the minimum and maximum preload we're going to achieve for a given input torque, at a predictable confidence level."

With the above qualifier in mind, a maximum torque can be estimated as the torque which would cause a component to reach it's Code allowable.

Cover Plate Bolts:

Minimum torque = 9.6 ft-lb (T_{in} for cover bolts)

From the in-service stress evaluation above, the maximum stress ratio for the cover plate bolts is 0.823, which correponds to the T_{in} torque value. The maximum torque permitted, T_{max}, is the torque which results in a Code stress ratio of 1.0. The stresses and allowables associated with this stress margin are as follows:

$\sigma_{bp} := 8924 \cdot \frac{lb}{in^2}$ Preload torque stress, 9.6 ft-lb torque (above)

$\sigma_{bpress} := 1974 \cdot \frac{lb}{in^2}$ Pressure stress (above)

$\sigma_{ballow} := 2 \cdot S_{mb}$ Allowable in-service stress, 2Sm

$T_{incr} := \frac{\sigma_{ballow} - \sigma_{bpress}}{\sigma_{bp}}$ Allowable torque increase ratio

$T_{incr} = 2.491$

$T_{max} := T_{incr} \cdot 9.6 \cdot ft \cdot lb$

$T_{max} = 23.91 \cdot lb \cdot ft$

Thus, the maximum torque range for the cover plate bolts is 10 to 24 ft-lb. To allow some margin on both seal load and bolt overstress, a torque of 17 ± 5 ft-lb is recommended. As indicated above, a testing/calibration program is recommended to finalize the bolt torque range.

Process Valves:

Following the same procedure as above for the process valve torquing, yields the following:

$\sigma_{bp} := 4097 \cdot \frac{lb}{in^2}$ Preload stress for T_{in} = 65 ft-lb torque

Ignoring small contribution from torsional stress as indicated above):

$\sigma_{bpress} := 509.8 \cdot \frac{lb}{in^2}$ Pressure stress

$\sigma_{ballow} := 2 \cdot S_{mv}$ Allowable in-service stress

$T_{incr} := \frac{\sigma_{ballow} - \sigma_{bpress}}{\sigma_{bp}}$

$T_{incr} = 2.734$

$T_{in} = 65.09 \cdot lb \cdot ft$

$T_{max} := T_{incr} \cdot T_{in}$

$T_{max} = 177.972 \cdot lb \cdot ft$

Thus, a torque of 178 ft-lb will cause the axial stress to reach the allowable stress of 2 S_m. However, as shown above, the rupture disc valve hex head will be overstressed by a torque exceeding 130 ft-lbs. An appropriate torque value is one which assures an adequate seal preload, but low enough to prevent damage to the hollow hex head and not damage the seal. A reasonable recommended torque is 90 ± 15 ft-lb). The need for a

testing/calibration program, discussed above, is especially important for the process valves because the geometry is significantly different from a solid cylinder.

Rupture Disc Holder:

As shown in Section 8.3, a minimum torque of 20 ft-lb is required to preload the seal and a torque in excess of 50 ft-lbs will overstress the disc holder minimum cross section. To assure an adequate preload and to avoid damaging the seal and/or the holder, a torque magnitude of 30 ± 5 ft-lbs) is recommended.

8.5 Process Filter Attachment Welds

Drawings H-2-828041 and H-2-828049 specifies 1/8-in. fillet welds on both sides of the filter (11.5 in. on one side and 16.38 in. on the other side).

$$L_{sw} = 11.5 \cdot in$$

$$L_{lw} = 16.38 \cdot in$$

The filter is relatively flat, allowing the simplifying assumption that the filter inertia loading is in the plane of the welds. Assuming the center of gravity is midway between the welded edges, the worst drop direction is parallel to the weld axes. Moment equilibrium requires that the force on each weld be equal.

$$W_f = 50 \cdot lb$$

Maximum filter weight, Reference 1

$$F_l := \frac{W_f 101}{2}$$

$$F_l = 2.525 \cdot 10^3 \cdot lb$$

$$\sigma_w := \frac{F_l}{L_{sw} \cdot 0.125 \cdot in \cdot 0.707}$$

$$\sigma_w = 2.484 \cdot 10^3 \cdot \frac{lb}{in^2}$$

The inertia force, being in the same plane as the welds, results in a shear stress with a throat stress allowable of $0.6S_m$.

$n := 0.35$ Weld efficiency factor, surface visual inspection

$S_m := 13500 \cdot \frac{lb}{in^2}$ 304L @ design temperature

$$Ratio := \frac{\sigma_w}{0.6 \cdot S_m \cdot n}$$

$Ratio = 0.876$ Filter attachment welds OK

This document was too large to scan as a whole document, therefore it required breaking into smaller sections.

Document number: SD-SNF-DR-003

Section 3 **of** 3

Title: Multi-Canister Overpack Design Report

Date: 6/9/97 **Revision:** A000

Originator: Smith KE
Co: WESH

Recipient:
Co:

References: EDT-620106

PARSONS	CALCULATION PACKAGE	FILE NO: KH-8009-8-09 DOC. NO.: HNF-SD-SNF-DR-003, Rev. 0, Appendix 11 PAGE 1 of 133

PROJECT NAME: MCO Final Design

CLIENT: Duke Engineering & Services Hanford, Inc.

CALCULATION TITLE:

MULTI-CANISTER OVERPACK THERMAL STRESS ANALYSIS

PROBLEM STATEMENT OR OBJECTIVE OF CALCULATION:

PERFORM A THERMAL STRESS ANALYSIS OF THE MCO IN ACCORDANCE WITH REVISION 3 OF THE MCO PERFORMANCE SPECIFICATION. CRITERIA ARE BASED ON THE ASME CODE.

QA Parsons 4/9/97

DOCUMENT REVISION	AFFECTED PAGES	REVISION DESCRIPTION	PREPARED BY INITIALS / DATE	CHECKED BY INITIALS / DATE	APPROVED BY INITIALS / DATE
0	1-133	Initial Issue	Zachary Sargent 4/8/97	Joe Nichols 4/7/97	Charles Temus 4/9/97

CONTENTS

	Page
CONTENTS	2
LIST OF TABLES	3
LIST OF FIGURES	3
1. INTRODUCTION	5
2. REFERENCES	5
3. ASSUMPTIONS	6
4. MATERIAL PROPERTIES	6
5. ACCEPTANCE CRITERIA	6
6. SHELL DESIGN	9
6.1 Internal Pressure	10
6.2 External Pressure	10
7. STRESS ANALYSIS	11
7.1 Computer Model	11
7.2 Load Cases	15
7.3 Results	16

LIST OF TABLES

Page

TABLE 1: ASME CODE MATERIAL PROPERTIES FOR TYPE 304L STAINLESS STEEL 7

TABLE 2: ASME CODE MATERIAL PROPERTIES FOR TYPE 304 STAINLESS STEEL 8

TABLE 3: ALLOWABLE LEVEL A STRESS INTENSITY LIMITS FOR TYPE 304L 8

TABLE 4: ALLOWABLE LEVEL A STRESS INTENSITY LIMITS FOR TYPE 304 9

TABLE 5: ANSYS MODEL STRESS REPORT SECTIONS 17

TABLE 6: SUMMARY OF MAXIMUM STRESS INTENSITIES FOR LOAD CASE 1 18

TABLE 7: SUMMARY OF MAXIMUM STRESS INTENSITIES FOR LOAD CASE 2 19

TABLE 8: SUMMARY OF MAXIMUM STRESS INTENSITIES FOR LOAD CASE 3 19

TABLE 9: SUMMARY OF MAXIMUM STRESS INTENSITIES FOR LOAD CASE 4 20

TABLE 10: SUMMARY OF MAXIMUM STRESS INTENSITIES FOR LOAD CASE 5 20

TABLE 11: SUMMARY OF MAXIMUM STRESS INTENSITIES FOR LOAD CASE 6 21

LIST OF FIGURES

Page

FIGURE 1: AXISYMMETRIC MODEL WITH BOUNDARY CONDITIONS, UPPER SECTION 12

FIGURE 2: AXISYMMETRIC MODEL WITH COUPLED NODES 13

FIGURE 3: AXISYMMETRIC MODEL WITH BOUNDARY CONDITIONS, LOWER SECTION 14

FIGURE 4: LOAD CASE 1 – UPPER SECTION STRESS INTENSITIES 22

FIGURE 5: LOAD CASE 1 -- LOWER SECTION STRESS INTENSITIES 23

FIGURE 6: LOAD CASE 2 – UPPER SECTION STRESS INTENSITIES 24

FIGURE 7: LOAD CASE 3 – UPPER SECTION STRESS INTENSITIES 25

FIGURE 8: LOAD CASE 3 – LOWER SECTION STRESS INTENSITIES 26

FIGURE 9: LOAD CASE 4 – UPPER SECTION STRESS INTENSITIES 27

FIGURE 10: LOAD CASE 4 – LOWER SECTION STRESS INTENSITIES 28

FIGURE 11: LOAD CASE 5 – UPPER AND LOWER MCO TEMPERATURE DISTRIBUTION 29

FIGURE 12: LOAD CASE 5 – UPPER SECTION STRESS INTENSITIES 30

FIGURE 13: LOAD CASE 5 – LOWER SECTION STRESS INTENSITIES 31

FIGURE 14: LOAD CASE 6 – UPPER SECTION STRESS INTENSITIES @ HEAT-UP 32

FIGURE 15: LOAD CASE 6 – LOWER SECTION STRESS INTENSITIES @ HEAT-UP 33

FIGURE 16: LOAD CASE 6 – UPPER SECTION STRESS INTENSITIES @ COOL-DOWN 34

FIGURE 17: LOAD CASE 6 – LOWER SECTION STRESS INTENSITIES @ COOL-DOWN 35

APPENDICES

APPENDIX A: 36

1. INTRODUCTION

The Multi-Canister Overpack (MCO) assembly is a single purpose Spent Nuclear Fuel (SNF) that is capable of maintaining subcriticality at all times and maintain SNF containment and confinement after being closed and sealed. The MCO assembly consists of a shell, a shield plug, a locking ring and jacking screws.

This calculation documents the evaluation of the MCO shell under different Process Operating Conditions. These evaluations are as follows:

1. MCO at 75°C (167°F) with full internal vacuum and 25 psig external pressure.
2. MCO at 375°C (707°F) with full internal vacuum and 0 psig external pressure.
3. MCO at 375°C (707°F) with 150 psig internal pressure and 0 psig external pressure.
4. Lifting of the MCO at 132°C (270°F) and 150 psig.
5. Thermal gradient of a maximum of 100°C (180°F) between the outside of the MCO shell and the center of the MCO shield plug.
6. Heat-up / Cool Down thermal transient.

The evaluations are performed based on the criteria of the ASME Code. A combination of hand calculations and ANSYS© analysis is used.

2. REFERENCES

1. "Performance Specification for the Spent Nuclear Fuel Multi-Canister Overpack," Specification HNF-S-0426, Revision 3, February 1997.
2. ASME Boiler and Pressure Vessel Code, Section II - Materials, Part D - Properties, 1995 Edition with 1995 Addenda.
3. ASME Boiler and Pressure Vessel Code, Section III - Division I, Subsection NB, 1995 Edition with 1995 Addenda.
4. Swanson Analysis System, Inc., ANSYS© Engineering Analysis System User's Manual, Volumes I, II and III, Version 5.0A, 23 December 1992.

5. Duke Engineering Services Hanford, Specifications Drawings, Drawing H-2-828041, Revision C.

3. ASSUMPTIONS

1. Pressure is applied uniformly
2. Others as noted

4. MATERIAL PROPERTIES

The MCO assembly is fabricated from Type 304L stainless steel, except for the jacking screws which are fabricated ASTM A193 Grade B8M. The MCO shell is fabricated out of Type 304L stainless steel with minimum tensile and yield strengths of Type 304 stainless steel. For this analysis, values for material properties are taken from Section II, Part D of the Code (See [2]) and are listed in Table 1.

For the shield plug, locking ring, lifting cap and canister collar, Type 304L stainless steel may be replaced with Type 304N or Type 304LN, at the discretion of the designer. The effects of thermal conductivity, thermal expansion, minimum yield strength and minimum tensile strength have been evaluated and it is the conclusion of the preparer that the use of these stainless steels does not, in any way, alter the contents of this calculation.

5. ACCEPTANCE CRITERIA

This calculation considers thermal and pressure loads. The allowable stress intensities are specified by NB-3220 of the ASME Code [3]. For normal condition loading, the MCO is analyzed according to Level A stress intensity limits, as listed in Table 2 below.

Table 1: ASME Code Material Properties for Type 304L Stainless Steel

Temperature		E^1	α^2	β^3	S_y^4	S_m^5	S_u^6
°F	°C	(x 10^6 psi)	(in./in./°F)	(Btu/Hr-in.-°F)	(ksi)	(ksi)	(ksi)
-20	-29		--	--	25.0	16.7	70.0
70	21	28.3	--	0.716	25.0	16.7	70.0
100	38	28.1[7]	8.55	0.725	25.0	16.7	70.0
200	93	27.6	8.79	0.775	21.3	16.7	66.2
270	132	27.2	8.94	0.807	19.8	16.7	62.5
300	149	27.0	9.00	0.817	19.1	16.7	60.9
392	200	26.5	9.18	0.863	17.6	15.9	58.7
400	204	26.5	9.19	0.867	17.5	15.8	58.5
500	260	25.8	9.37	0.908	16.3	14.8	57.8
600	316	25.3	9.53	0.942	15.5	14.0	57.0
700	371	24.8	9.69	0.983	14.9	13.5	56.2
707	375	24.8	9.70	0.986	14.9	13.5	56.2
800	427	24.1	9.82	1.02	14.4	13.0	55.5

[1] Table TM-1, Material Group G, P. 614

[2] Table TE-1, P.590-591

[3] Table TCD, P. 606

[4] Table Y-1, P. 524

[5] Table 2A, P. 322

[6] Table U, P. 441

[7] Underlined values determined by linear interpolation, all others taken from ASME Code, Section II, Part D.

Table 2: ASME Code Material Properties for Type 304 Stainless Steel

Temperature		E^{8}	α^{9}	β^{10}	S_y^{11}	S_m^{12}	S_u^{13}
°F	°C	(x 10^6 psi)	(in./in./°F)	(Btu/Hr-in.-°F)	(ksi)	(ksi)	(ksi)
-20	-29		--	--	30.0	20.0	75.0
70	21	28.3	--	0.716	30.0	20.0	75.0
100	38	28.1[14]	8.55	0.725	30.0	20.0	75.0
200	93	27.6	8.79	0.775	25.1	20.0	71.0
270	132	27.2	8.94	0.807	23.3	20.0	67.5
300	149	27.0	9.00	0.817	22.5	20.0	66.0
392	200	26.5	9.18	0.863	20.9	18.8	64.5
400	204	26.5	9.19	0.867	20.8	18.7	64.4
500	260	25.8	9.37	0.908	19.4	17.5	63.5
600	316	25.3	9.53	0.942	18.3	16.4	63.5
700	371	24.8	9.69	0.983	17.7	16.0	63.5
707	375	24.8	9.70	0.986	17.6	16.0	63.5
800	427	24.1	9.82	1.02	16.9	15.2	62.7

Table 3: Allowable Level A Stress Intensity Limits for Type 304L

	Allowable Stress Intensity Limits (ksi)			
Stress Intensity	Formula	132°C (270°F)	75°C (167°F)	375°C (707°F)
P_M	$1.0S_M$	16.7	16.7	13.5
P_L	$1.5\ S_M$	25.1	25.1	20.3
P_L+P_B	$1.5\ S_M$	25.1	25.1	20.3
P_L+P_B+Q	$3.0\ S_M$	50.1	50.1	40.5
P_M+P_B+Q+F	N / A[15]			

[8] Table TM-1, Material Group G, P. 614
[9] Table TE-1, P. 590-591
[10] Table TCD, P. 606
[11] Table Y-1, P. 530-531
[12] Table 2A, P. 326
[13] Table U, P. 441
[14] Underlined values determined by linear interpolation, all others taken from ASME Code, Section II, Part D.
[15] Not applicable because fatigue is not being considered.

Table 4: Allowable Level A Stress Intensity Limits for Type 304

	Allowable Stress Intensity Limits (ksi)			
Stress Intensity	Formula	132°C (270°F)	75°C (167°F)	375°C (707°F)
P_M	$1.0S_M$	20.0	20.0	16.0
P_L	$1.5\ S_M$	30.0	30.0	24.0
P_L+P_B	$1.5\ S_M$	30.0	30.0	24.0
P_L+P_B+Q	$3.0\ S_M$	60.0	60.0	48.0
P_M+P_B+Q+F	N / A[16]			

6. SHELL DESIGN

The MCO shell and bottom plate are analyzed for internal pressure using classical methods. The allowable external pressure for the shell is calculated per the rules of Paragraph NB-3133.2 Reference 3. The design internal pressure of the MCO is 150 psi. There is also a pressure on the bottom of the MCO due to the weight of the fuel. From Appendix A of [1], the weight of the contents, W_F, is approximately 16,000 lbs.

Given the inside radius of the MCO shell R = 11.50 inches, the area of the bottom plate is:

$$A_{BP} = \pi(R^2) = 415.48 \text{ in}^2$$

Therefore, the pressure from the fuel on the bottom plate, P_F, is

$$P_F = \frac{W_F}{A_{BP}} = 38.51 \text{psi or } 39.00 \text{ psi}$$

The fuel is conservatively assumed to act as a fluid, resulting in lateral pressure against the shell walls. Therefore, the total internal pressure is 150 + 39 = 189 psi.

[16] Not applicable because fatigue is not being considered.

6.1 Internal Pressure

The inside diameter of the MCO shell is 23.00 inches and its outer diameter is 24.00 inches. The wall thickness is therefore 0.5 inch. The stress through the shell due to the pressure load is then

$$\sigma_P = \frac{pR}{t}$$

where p = internal pressure = 189 psig

R = Mean Radius = (24.00+23.00)/4 = 11.75 in.

T = thickness of MCO shell = 0.5 in.

Therefore

$$\sigma_P = \frac{(189)(11.75)}{0.50} = 4442 \text{ psi}$$

6.2 External Pressure

In Process Operating Condition 1, the MCO is subjected to a full internal vacuum with a 25 psig external pressure; equivalent to external pressures of 14.7 psi + 25 psi or 40 psi at 75°C (167°F).

Given the following parameters:

T = Shell thickness = 0.50 inches

D_o = Shell outside diameter = 24.00 inches

L = Shell unsupported length = 143.55 inches (139.76 +1/3(0.88)+1/3(10.5)) [6]

$D_o / T = 48.0$

$L / D_o = 5.98$

A = Geometric factor, from Figure G of [2] = 0.0006

B = Stress factor, from Figure HA-1 of [2] = 6,500 psi

P_a = Allowed external pressure

$$P_a = \frac{4B}{3\left(\frac{D_o}{T}\right)} = 181 \text{ psi}$$

This value is greater than the 40 psi maximum external pressure, therefore the cylindrical portion of the shell is adequate for external pressure.

7. STRESS ANALYSIS

A stress analysis of the MCO assembly is performed using the computer analysis program ANSYS, Reference 5. For normal conditions six load cases are evaluated as described in Section 7.2.

7.1 Computer Model

The ANSYS model is built using two-dimensional axisymmetric elements. To model the threads between the shell and locking ring, coincident nodes are coupled. Coupled nodes are also used to model the threads between the locking ring and the jacking screw. Symmetry boundary conditions are applied to all nodes along the centerline.

The axisymmetric model used in this analysis is shown in Figures 1, 2 and 3.

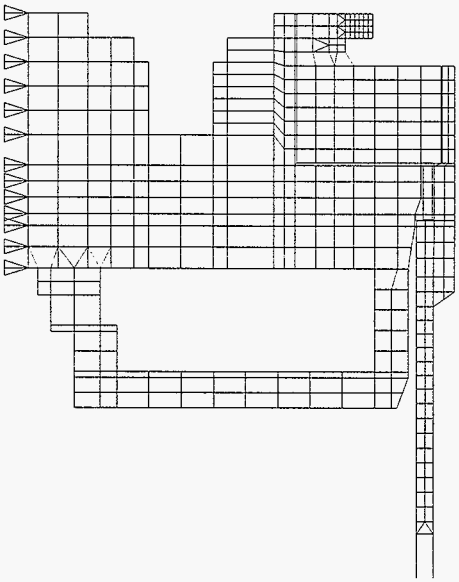

Figure 1: Axisymmetric Model with Boundary Conditions, Upper Section

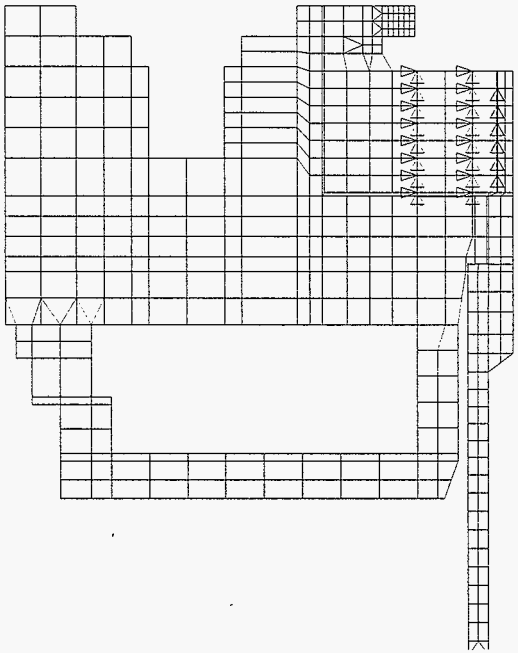

Figure 2: Axisymmetric Model with Coupled Nodes

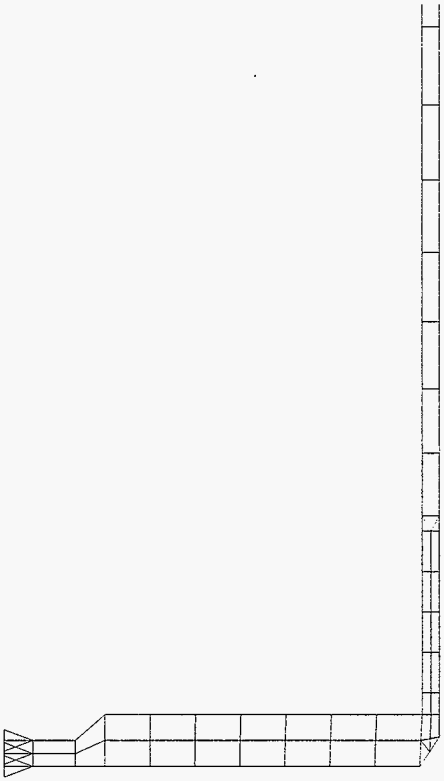

Figure 3: Axisymmetric Model with Boundary Conditions, Lower Section

7.2 Load Cases

Six Process Operating Condition load cases are analyzed in this calculation.

1. Full internal vacuum with 25 psig external pressure; equivalent to external pressures of 14.7 psi + 25 psi or 40 psi, at 75°C (167°F) uniform temperature. All stresses for this load case are classified as primary stresses (P_M or P_L+P_B).

2. Full internal vacuum with 0 psig external pressure; equivalent to external pressure of 14.7 psi or 15 psi, at 375°C (707°F) uniform temperature. All stresses for this load case are classified as primary stresses.

3. 189 psi internal pressure at 375°C (707°F) uniform temperature. This value represents 150 psi for the design pressure and 39 psi for the fuel weight. All stresses for this load case are classified as primary stresses.

4. Lifting of the MCO with 189 psi internal pressure at 132°C (270°F) uniform temperature. All stresses for this load case are classified as primary stresses.

5. Differential temperature: shell at 375°C (707°F) and shield plug at 275°C (527°F), at 189 psi internal pressure. All stresses for this load case are classified as primary plus secondary (P_L+P_B+Q), since thermal stresses are secondary stresses (Q). The primary stresses for this load case are the same as load case 1.

6. Heat up / cool down transient: shell temperature is different at various locations, timed at 24 hours (heat up) and at 73 hours (cool down), with 189 psi internal pressure. Shell temperatures are obtained from Section 4.9.2 and Figure 1 of [1]. All stresses for this load case are classified as primary plus secondary (P_L+P_B+Q), since thermal stresses are secondary stresses (Q). The primary stresses for this load case are the same as load case 1.

For Load Case 1, the corresponding ANSYS input and output files are POC1.inp and POC1.out, respectively.

For Load Case 2, the corresponding ANSYS input and output files are POC2.inp and POC2.out, respectively.

For Load Case 3, the corresponding ANSYS input and output files are MCO375.inp and MCO375.out, respectively.

For Load Case 4, the corresponding ANSYS input and output files are POC4.inp and POC4.out, respectively.

For Load Case 5, the corresponding ANSYS input and output files are TG275.inp and TG275.out, respectively.

For Load Case 6 at Heat-up, the corresponding ANSYS input and output files are TT24.inp and TT24.out, respectively.

For Load Case 6 at Cool-down, the corresponding ANSYS input and output files are TT73.inp and TT73.out, respectively.

7.3 Results

Stresses are reported along the sections is listed in Table 4. A summary of the maximum stress intensities is presented in Tables 5 through 9.

For load cases 1,2,3 and 4 (internal and external pressures), the primary membrane stress P_M, is compared to the allowable membrane stress, S_M; the membrane plus bending stress, P_L+P_B, is compared to $1.5S_M$. For load cases 5 and 6, the total stress P_L+P_B+Q, is compared to $3S_M$.

The results show that for all load cases, the computed stress intensities are lower than the allowable stress intensities.

Figure 11 is a temperature distribution plot for Load Case 6. Per the MCO Performance Specification, one can notice that the shell radial temperature difference does not exceed 5°C (9°F).

Table 5: ANSYS Model Stress Report Sections

Component	Inside Node	Outside Node
Bottom Plate	1	41
	6	46
	10	50
Lower Shell	50	52
	50	55
	53	55
	62	64
	65	67
Mid-Shell	100	101
	122	123
	134	135
	156	157
	170	171
	180	181
Upper Shell	202	204
	235	237
	985	989
	262	264
	277	279
	292	294
Shield Plug	601	641
	601	613
	603	703
	606	706
	706	736
	766	806
	748	808
	730	810
	736	815
	869	874
	870	875
Locking Ring	431	434
	404	424
	406	426

For the following tables the lower shell, middle shell and upper shell have the properties of Type 304 stainless steel. The bottom plate, shield plug and locking ring have the properties of Type 304L stainless steel.

Therefore, in calculating the stress ratios, the following apply:

Type 304: S_M = 20.0 ksi @ 75°C (167°F)
S_M = 16.0 ksi @ 375°C (707°F)
S_M = 20.0 ksi @ 132°C (270°F)

Type 304L: S_M = 16.7 ksi @ 75°C (167°F)
S_M = 13.5 ksi @ 375°C (707°F)
S_M = 16.7 ksi @ 132°C (270°F)

Table 6: Summary of Maximum Stress Intensities for Load Case 1

Component	P_M (ksi)	Stress Ratio	P_L+P_B (ksi)	Stress Ratio
Bottom Plate (304L)	0.94	0.06	2.56	0.11
Lower Shell (304)	1.02	0.05	1.88	0.08
Middle Shell (304)	1.01	0.05	1.03	0.04
Upper Shell (304)	6.69	0.33	10.28	0.43
Shield Plug (304L)	6.58	0.39	7.57	0.30
Locking Ring (304L)	1.18	0.07	1.69	0.07

Note: Stress Ratio = $\frac{P_M}{S_M}$ or $\frac{P_L + P_B}{1.5 S_M}$ S_M at 75°C (167°F)

Table 7: Summary of Maximum Stress Intensities for Load Case 2

Component	P_M (ksi)	Stress Ratio	P_L+P_B (ksi)	Stress Ratio
Bottom Plate (304L)	0.35	0.03	0.96	0.05
Lower Shell (304)	0.38	0.02	0.71	0.03
Middle Shell (304)	0.38	0.02	0.39	0.02
Upper Shell (304)	5.48	0.34	8.62	0.36
Shield Plug (304L)	7.20	0.53	7.64	0.38
Locking Ring (304L)	1.26	0.09	1.74	0.08

Note: Stress Ratio = $\frac{P_M}{S_M}$ or $\frac{P_L + P_B}{1.5S_M}$ S_M at 375°C (707°F)

Table 8: Summary of Maximum Stress Intensities for Load Case 3

Component	P_M (ksi)	Stress Ratio	P_L+P_B (ksi)	Stress Ratio
Bottom Plate (304L)	4.41	0.33	12.05	0.59
Lower Shell (304)	4.84	0.30	11.46	0.48
Middle Shell (304)	4.76	0.30	4.86	0.20
Upper Shell (304)	6.25	0.39	10.35	0.43
Shield Plug (304L)	4.47	0.33	6.46	0.32
Locking Ring (304L)	1.65	0.12	2.27	0.11

Note: Stress Ratio = $\frac{P_M}{S_M}$ or $\frac{P_L + P_B}{1.5S_M}$ S_M at 375°C (707°F)

Table 9: Summary of Maximum Stress Intensities for Load Case 4

Component	P_M (ksi)	Stress Ratio	P_L+P_B (ksi)	Stress Ratio
Bottom Plate (304L)	4.48	0.27	12.29	0.49
Lower Shell (304)	4.81	0.24	8.52	0.28
Middle Shell (304)	4.78	0.24	4.86	0.16
Upper Shell (304)	6.89	0.35	11.53	0.38
Shield Plug (304L)	4.36	0.26	6.39	0.26
Locking Ring (304L)	1.85	0.11	3.24	0.13

Note: Stress Ratio = $\frac{P_M}{S_M}$ or $\frac{P_L + P_B}{1.5S_M}$ S_M at 132°C (270°F)

Table 10: Summary of Maximum Stress Intensities for Load Case 5

	Differential Temperature	
Component	P_L+P_B+Q (ksi)	Stress Ratio
Bottom Plate (304L)	11.79	0.29
Lower Shell (304)	9.45	0.20
Middle Shell (304)	4.86	0.10
Upper Shell (304)	10.85	0.23
Shield Plug (304L)	21.71	0.54
Locking Ring (304L)	3.09	0.08

Note: Stress Ratio = $\frac{P_L + P_B + Q}{3S_M}$ S_M at 375°C for Shell, rest at 275°C

Table 11: Summary of Maximum Stress Intensities for Load Case 6

	Heat Up (24 hr.)		*Cool-Down (73 hr.)*	
Component	P_L+P_B+Q (ksi)	Stress Ratio	P_L+P_B+Q (ksi)	Stress Ratio
Bottom Plate (304L)	11.83	0.29	11.66	0.29
Lower Shell (304)	9.33	0.19	9.87	0.21
Middle Shell (304)	4.85	0.10	4.90	0.10
Upper Shell (304)	10.62	0.22	11.07	0.23
Shield Plug (304L)	8.13	0.20	6.24	0.15
Locking Ring (304L)	1.76	0.04	2.43	0.06

Note: Stress Ratio $= \dfrac{P_L + P_B + Q}{3S_M}$

Temperatures are extracted from Figure 1 of [1] for the Heat-up and Cool-down.

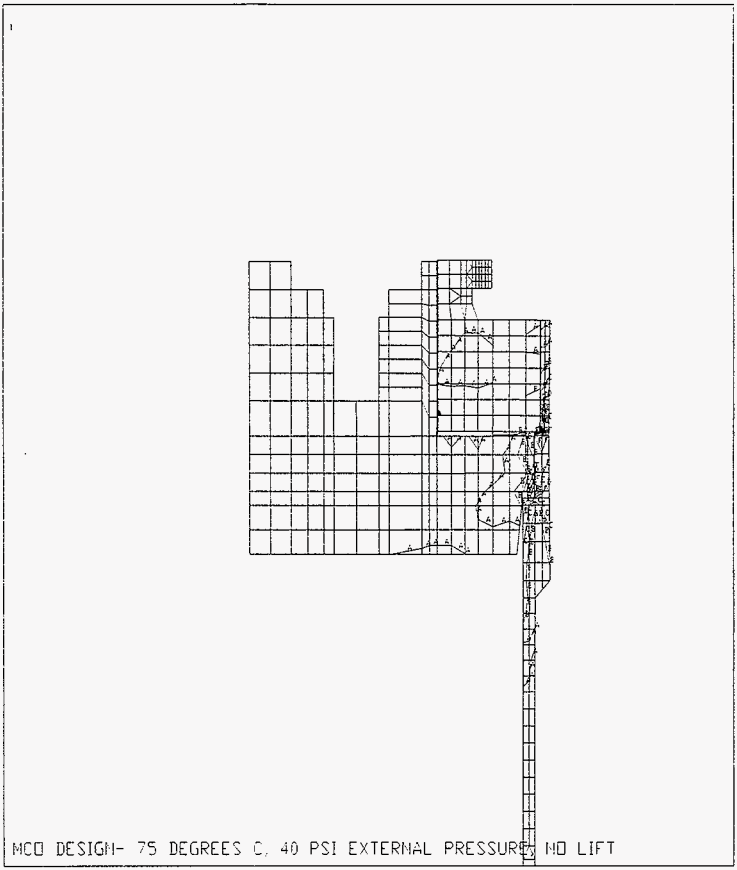

Figure 4: Load Case 1 – Upper Section Stress Intensities

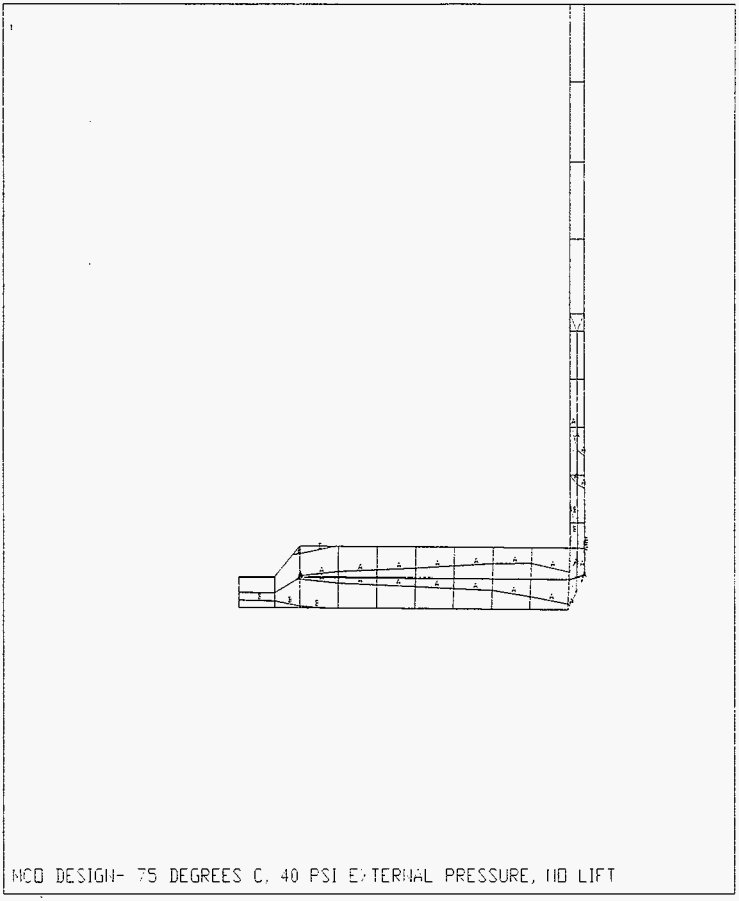

Figure 5: Load Case 1 -- Lower Section Stress Intensities

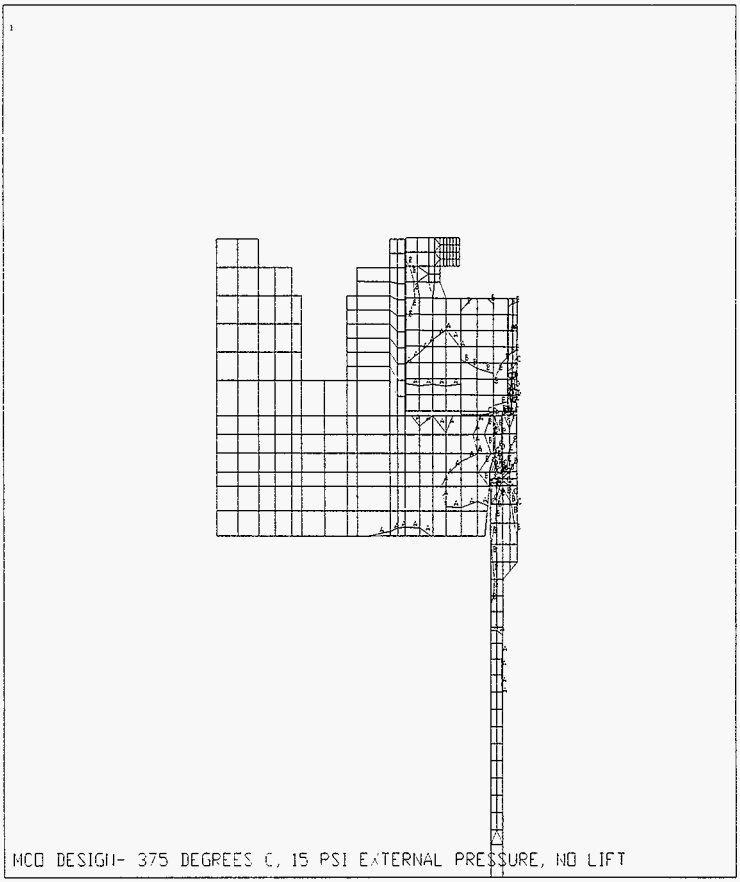

Figure 6: Load Case 2 – Upper Section Stress Intensities

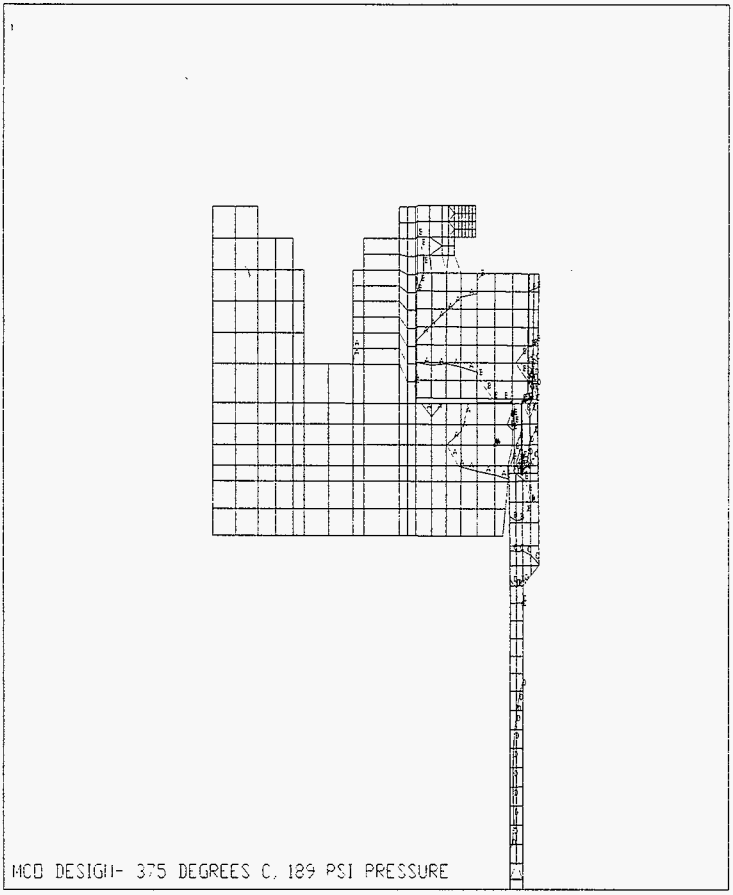

Figure 7: Load Case 3 – Upper Section Stress Intensities

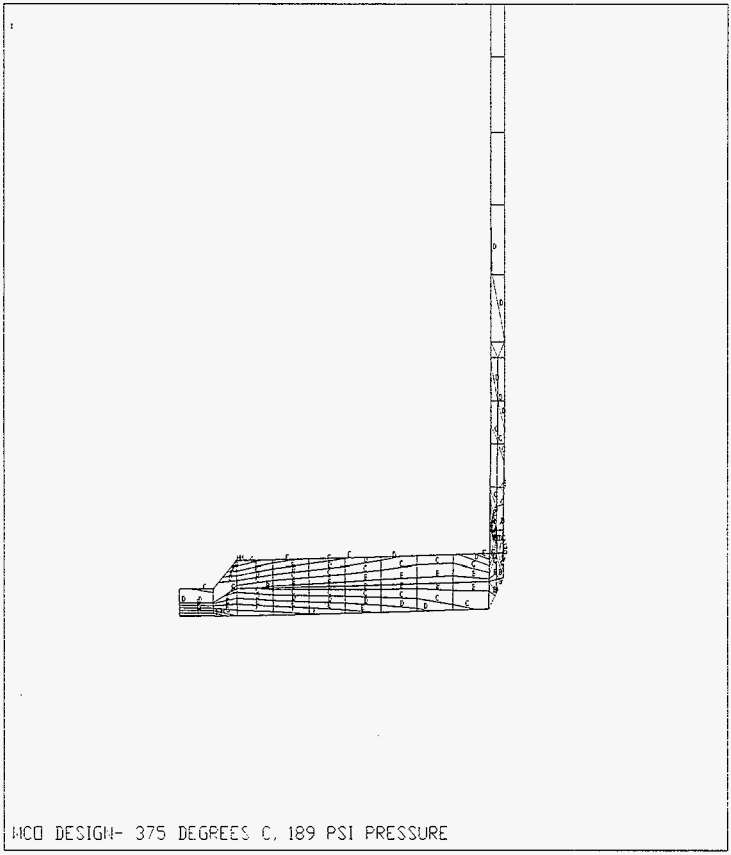

Figure 8: Load Case 3 – Lower Section Stress Intensities

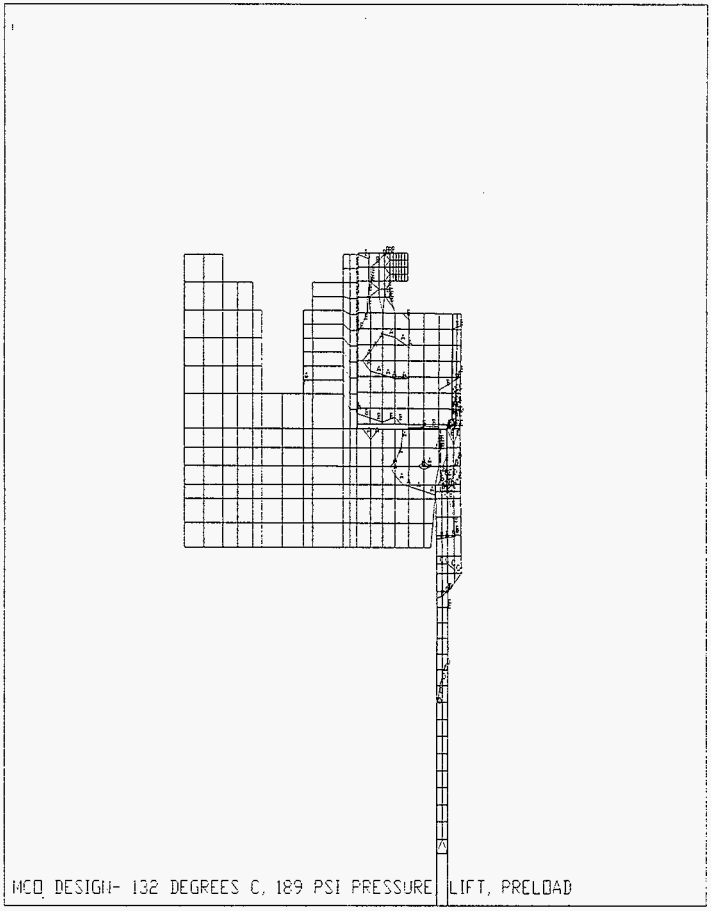

Figure 9: Load Case 4 – Upper Section Stress Intensities

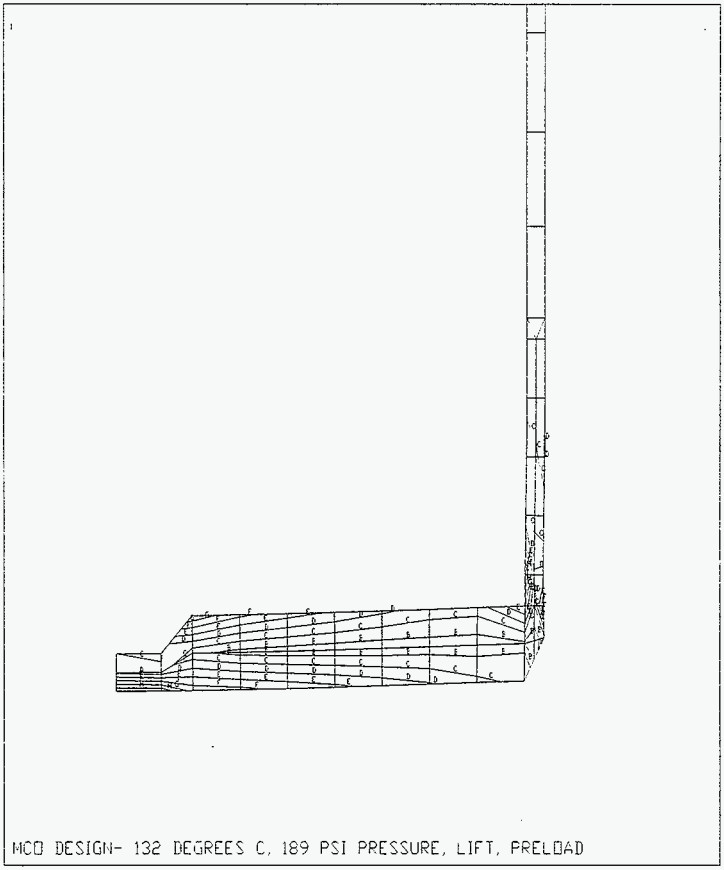

Figure 10: Load Case 4 – Lower Section Stress Intensities

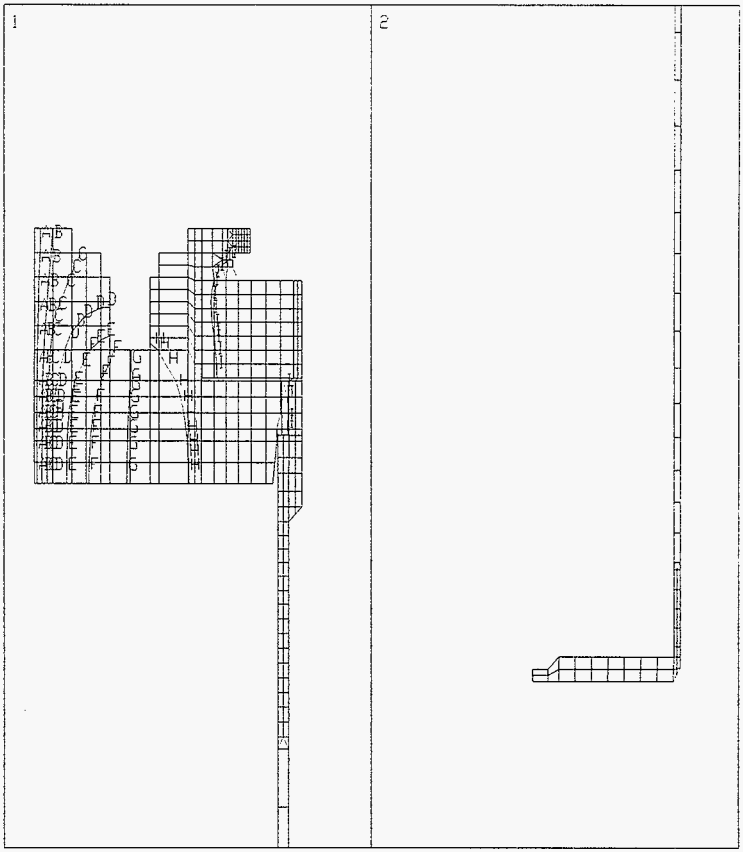

Figure 11: Load Case 5 – Upper and Lower MCO Temperature Distribution

Note: The temperature distribution for the lower MCO Assembly (pictured at right) shows no letters because it is a continuation of the upper shell, at 707°F.

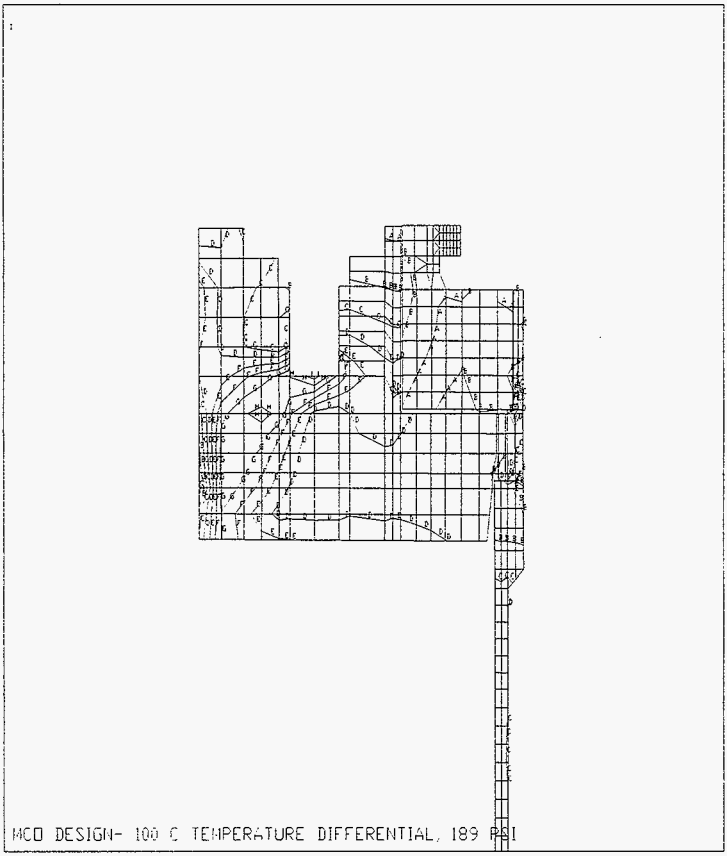

Figure 12: Load Case 5 – Upper Section Stress Intensities

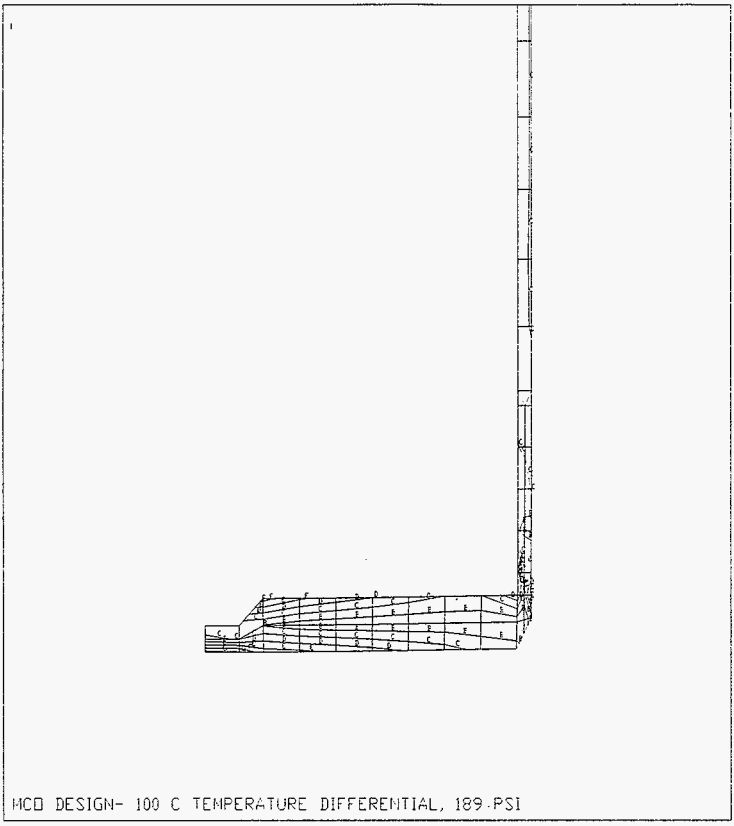

Figure 13: Load Case 5 – Lower Section Stress Intensities

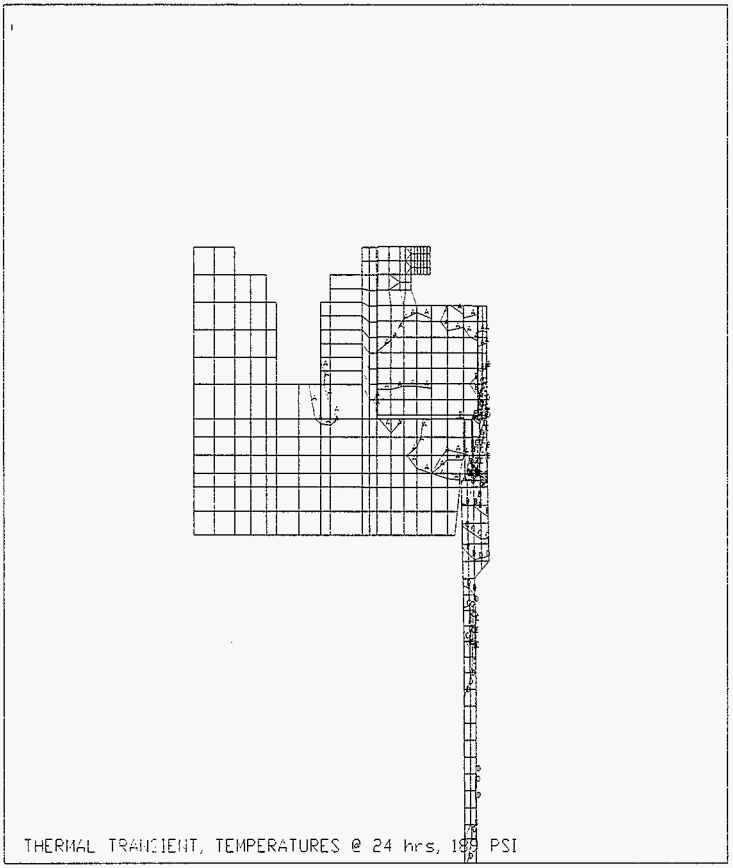

Figure 14: Load Case 6 – Upper Section Stress Intensities @ Heat-Up

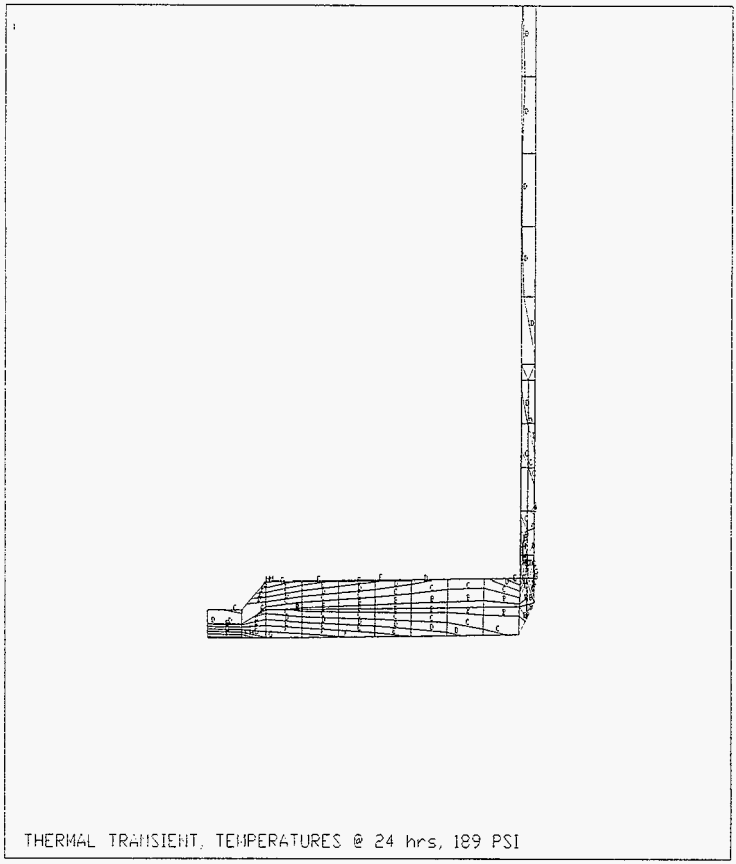

Figure 15: Load Case 6 – Lower Section Stress Intensities @ Heat-Up

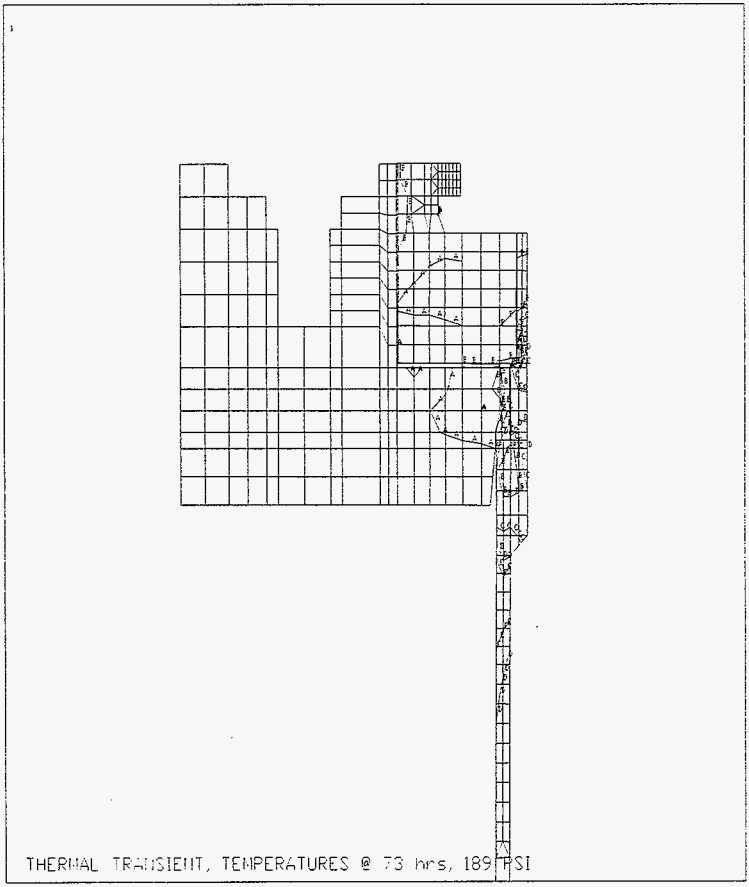

Figure 16: Load Case 6 – Upper Section Stress Intensities @ Cool-Down

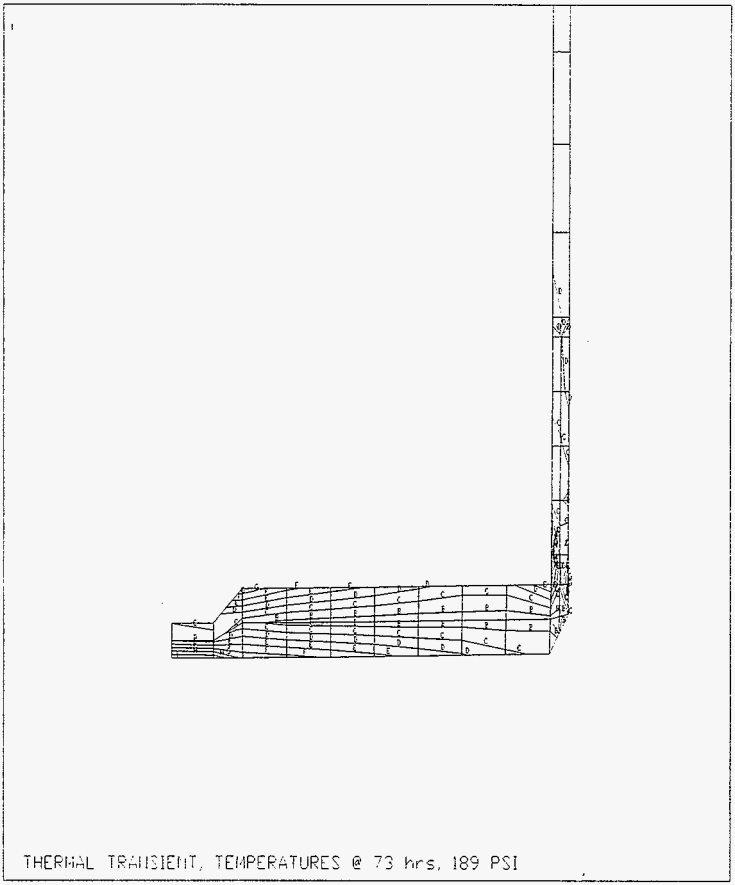

Figure 17: Load Case 6 – Lower Section Stress intensities @ Cool-Down

APPENDIX A:

Computer Run Output Sheets

&

Input File Listings

COMPUTER RUN COVER SHEET

Project Number:	KH-8009-8
Computer Code:	ANSYS®-PC
Software Version:	5.0A
Computer System:	MS-DOS, Pentium® Processor
Computer Run File Number:	KH-8009-8-09
Unique Computer Run Filename:	POC1.inp
Run Description:	Load Case 1: 40 psi, 75°C
Creation Date / Time:	27 March 1997 2:08:44 PM

Prepared By: Zachary G. Sargent Date 4/18/97

Checked By: Joe Nichols Date 4/17/97

LISTING OF POC1.INP FILE

```
/BATCH,LIST
/FILENAM,POC1
/PREP7
/TITLE,MCO DESIGN- 75 DEGREES C, 40 PSI EXTERNAL PRESSURE, NO LIFT

TREF,70
TUNIF,167

/COM **** ELEMENT TYPES ****
ET,1,42,,,1              ! Shell
ET,2,42,,,1              ! Shield Plug
ET,3,42,,,1              ! Lifting & Locking Ring
ET,4,12                  ! Gap Elements Between Shield Plug & Shell
KEYOPT,4,7,1
ET,5,42,,,1              ! Bolt

/COM **** REAL CONSTANTS FOR GAP ELEMENTS ****
R,4,-90,1.0e8,-0.06,3.0      ! Shell/Shield Plug, Initially Open .06"
R,5,0,1.0e8,2.95e-03         ! L. Ring/Shield Plug, Under Bolt, Preloaded
R,6,0,1.0E8,0,2.0            ! Sealing Surface, closed

/COM ************ MATERIAL PROPERTIES **************
MP,DENS,1,490/1728           ! 304L SS
MP,NUXY,1,0.3

MP,DENS,5,490/1728           ! SA193 Grade B8M
MP,NUXY,5,0.3

/COM **** DEFINING TEMPERATURES FOR MPDATA ****
MPTEMP,1, 70,100,200,300,400,500
MPTEMP,7,600,650,700,750

/COM **** DEFINING ELASTIC MODULI FOR 304L & SA-193 ****
MPDATA,EX,1,1,28.3e+06,28.1e+06,27.6e+06,27.0e+06,26.5e+06,25.8e+06
MPDATA,EX,1,7,25.3e+06,25.1e+06,24.8e+06,24.5e+06
/COM                         ! SA-193
MPDATA,EX,5,1,28.3e+06,28.1e+06,27.6e+06,27.0e+06,26.5e+06,25.8e+06
MPDATA,EX,5,7,25.3e+06,25.1e+06,24.8e+06,24.5e+06

/COM **** MEAN COEFFICIENTS OF THERMAL EXPANSION (in./in./(F) ****
! SA240 Gr 304L
MPDATA,ALPX,1,1,0,8.55e-06,8.79e-06,9.00e-06,9.19e-06,9.37e-06
MPDATA,ALPX,1,7,9.53e-06,9.61e-06,9.69e-06,9.76e-06

! SA193 Gr B8M
MPDATA,ALPX,5,1,0,8.54e-06,8.76e-06,8.97e-06,9.21e-06,9.42e-06
MPDATA,ALPX,5,7,9.60e-06,9.69e-06,9.76e-06,9.81e-06

/COM************ SHELL GEOMETRY ***************
IR=11.5                  ! Internal Shell Radius @ Bottom
OR=12.000                ! Shell Outside Radius @ Bottom
IR2 = 12.02              ! Inside Radius at Collar Sealing Surface
OR2 = 12.625             ! Outside Radius at Collar Sealing Surface
```

```
IR3 = 12.25                ! Inside Radius at Collar-Lifting Ring Weld

/COM **** BOTTOM COVER PLATE  [DWG SK-2-300378] ****
N,1,,-1.32                 ! Row 1
N,2,1.25,-1.32
N,3,2.13,-1.32
N,10,11.423,-1.32
FILL

N,41,0.00,-0.44            ! Row 3
N,42,1.25,-0.44
N,43,2.13,0.44
N,50,IR,0.44
FILL,43,50
N,52,OR,0.44
FILL,50,52

FILL,1,41,1,21,1,10        ! Middle Row
FILL,10,50,1,30
N,32,12,-0.32
FILL,30,32
FILL,10,32,1,11
N,53,IR,1.17
N,55,OR,1.17               ! Shell Stub/Weld
FILL,53,55

/COM **** SHELL [DWGS SK-2-300379 & SK-2-300461] ****
N,65,IR,6.68
N,67,OR,6.68
FILL
FILL,53,65,3,,3,3,1

/COM **** SINGLE ROW SHELL ****
N,100,IR,7.18              ! Inside
N,140,IR,71.68
N,180,IR,136.68

N,101,OR,7.18              ! Outside
N,141,OR,71.68
N,181,OR,136.68
FILL,100,140,20,,2,2,1,2.0
FILL,140,180,19,,2,2,1,.5

/COM **** DOUBLE ROW SHELL ****
N,190,IR,137.18            ! Transition to Double Row
N,192,OR,137.18
FILL

/COM **** BASE OF CASK THROAT--ELEVATION: 138 INCHES ****
N,217,IR,142.68            ! Transition to Double Row
N,219,OR,142.68
FILL
FILL,190,217,8,,3,3,1      ! Vertical Fill

/COM **** BOTTOM OF COLLAR TRANSITION ****
N,235,IR,146.06            ! Start of Transition to Large O.D &
```

```
N,237,OR,146.06              ! Assumed Location of Shield Plug Taper
FILL
N,238,IR,146.68
N,240,OR,146.68
FILL                  ! Horizontal Fill
FILL,217,235,5,,3,3,1        ! Vertical Fill

/COM **** TOP OF COLLAR TRANSITION ****
N,241,IR,147.31             ! End of Transition to Large O.D &
N,243,OR,147.31              ! Assumed Location of Shield Plug Taper
FILL                  ! Horizontal Fill
NGEN,2,3,241,243,1,,0.75

/COM **** COLLAR SEALING SURFACE ****
N,247,IR,149.63             ! Inside Radius of Sealing Surface
N,249,IR2,149.63            ! Outside Radius at Sealing Surface
FILL                  ! Horizontal Fill

/COM **** THICK WALL AT COLLAR TRANSITION ****
NGEN,2,10,240,249,3          ! Nodes 250-259 Coincident w/240-249 (by 3)
N,255,OR2,147.31            ! Outside Surface
N,261,OR2,149.63            ! Outside Surface
N,258,OR2,148.06
N,980,IR,149.38
N,981,11.755,149.38
N,982,IR2,149.38
N,983,12.317,149.38
N,984,OR2,149.38
N,990,OR2,146.68
FILL,240,990,1,251
NGEN,2,5,980,984,1,,-0.66
FILL,246,258,1,257
FILL,253,255,1,,1,3,3
FILL,237,990,1,991

/COM **** COLLAR AT BOTTOM EDGE OF PLUG (.155" above Sealing Surface) ****
NGEN,2,3,259,,,,0.245        ! Nodes 262

/COM **** COLLAR AT TOP EDGE OF PLUG (2" above bottom Edge) ****
NGEN,2,9,262,,,,2.00         ! Nodes 271
FILL,262,271,2

/COM **** COLLAR AT BASE OF THREADS ****
N,274,IR3,152.00
N,1000,IR2,152.00

/COM **** TOP TO COLLAR (WELD CLOSURE) ****
N,295,IR3,156.00
FILL,274,295
NGEN,3,1,259,295,3,(OR2-IR2)/2
NGEN,3,1,274,295,3,(OR2-IR3)/2

/COM********** LOCKING & LIFTING RING GEOMETRY **********
RING1=7.94
RING2=9.375
RING3=9.625
```

```
RING4=10.19
RING5=12.23
LOCAL,11,0,,152.00          ! Local System z=0 at Base of Ring
CSYS,11

/COM **** TOP EDGE ****
N,401,RING1,6.13
CSYS,O
N,404,9.375,158.13
FILL,401,404,,,1
N,406,RING4,158.13
FILL,404,406,,,1            ! Top Edge

/COM **** LIFTING SURFACE ****
CSYS,11
N,421,RING1,5.13
N,424,RING2,5.13
FILL,421,424
N,426,RING4,5.13
FILL,424,426
FILL,401,421,1,,10,6,1
N,431,RING1,6.13-1.56
N,434,RING2,6.13-1.56
FILL

/COM **** BOLTING SURFACE ****
N,441,RING1,4
N,444,RING3,4
FILL
N,445,10.9375-.6875,4        ! Inside Edge of Bolt Hole
N,447,10.9375+.6875,4        ! Outside Edge of Bolt Hole
FILL
N,910,10.9375-.6875,4
N,911,10.9375+.6875,4
N,448,RING5,4               ! O.D of Ring
CSYS,0                      ! Bolt Extension
N,924,10.25,152.00          ! Double Nodes @ Bolt for Gap elements
N,925,11.625,152.00
FILL,910,924,6,,2
FILL,911,925,6,,2
N,525,10.25,151.874         ! Bottom of Bolt Extension
N,527,11.625,151.874
FILL

/COM **** BOTTOM OF LIFTING/LOCKING RING ****
CSYS,11
NGEN,2,70,441,448,1,,-4      ! Bottom Surface of Lifting/Locking Ring
FILL,441,511,6,,10,8,1       ! Fill in Lifting/Locking Ring

/COM************ SHIELD PLUG (offset y by 158.25) *************
LOCAL,20,0,,158.13
TYPE,2
PLUGR1=11.975
PLUGR2=11.45
PLUGR3=11.25
PLUGR4=7.89
```

```
/COM **** NODES AT PLUG AXIS (r=0) ****
N,601
N,602,0,-1
N,603,0,-1.994
N,606,0,-4.994
FILL,603,606,2,604
N,607,0,-6.25
N,610,0,-8.25
FILL,607,610,2,608
N,611,0,-8.75
N,613,0,-10.5
FILL,611,613

/COM **** NODAL GENERATION ****
NGEN,2,20,601,613,1,0.8825
NGEN,2,20,621,633,1,0.8825          ! Id Large Opening
NGEN,2,20,642,653,1,0.6875
NGEN,2,20,662,673,1,0.6875          ! Id Medium Opening
NGEN,2,20,683,693,1,0.4235          ! Id Small Opening
NGEN,2,10,706,713,1,0.9515          ! Center of Opening

N,730,5.4665,-1.994                 ! Od Small Opening
N,736,5.4665,-4.994
FILL,730,736,5,731
N,737,5.4665,-6.25
N,740,5.4665,-8.25
FILL,737,740,2,738
N,741,5.4665,-8.75
N,743,5.4665,-10.5
FILL,741,743
N,748,5.89,-1.0
NGEN,2,20,730,743,1,0.4235
FILL,748,750
N,766,7.265,0
NGEN,2,20,748,763,1,1.375
FILL,766,768
NGEN,3,20,766,768,1,0.3125
N,789,7.5775,-1.56
N,796,7.5775,-5.56
FILL,789,796,6
NGEN,2,20,789,796,1,0.3125
NGEN,3,20,777,783,1,0.3125

/COM **** UNDER LOCKING RING ****
N,824,8.5017,-6.25
N,827,8.5017,-8.25
FILL
N,828,8.5017,-8.75
N,830,8.5017,-10.5
FILL
NGEN,3,7,824,830,1,0.5616
NGEN,2,7,838,844,1,0.625
NGEN,2,7,845,851,1,0.6875          ! Under Bolt
N,859,11.625,-6.25
N,860,11.625,-6.917
```

```
N,861,11.625,-7.584
N,862,PLUGR2,-8.25
N,863,PLUGR2,-8.75
N,865,PLUGR3,-10.5
FILL,863,865,1
N,866,PLUGR1-0.288,-6.25
N,869,PLUGR1-0.288,-8.25
FILL,866,869,2
N,870,PLUGR1-0.288,-8.476
NGEN,2,5,866,870,1,0.288

/COM **** REFINING LIFTING EAR ****
CSYS,0
N,877,9.53,158.13
N,889,9.53,157.63
N,901,9.53,157.13
FILL,403,404,1,876
FILL,413,414,1,888
FILL,423,424,1,900
FILL,877,405,1,878
FILL,405,406,2,879,1
FILL,889,415,1,890
FILL,415,416,2,891,1
FILL,404,414,1,881
FILL,877,889,1,882
FILL,878,890,1,883
FILL,405,415,1,884
FILL,879,891,1,885
FILL,880,892,1,886
FILL,406,416,1,887
FILL,889,901,1,894
FILL,414,424,1,893
FILL,901,425,1,902
FILL,890,902,1,895
FILL,415,425,1,896
FILL,425,426,2,903,1
FILL,891,903,1,897
FILL,892,904,1,898
FILL,416,426,1,899
FILL,424,434,1,907
FILL,433,434,1,908
FILL,423,433,1,905
FILL,905,907

/COM **** COUPLING NODES ****
/COM **** BETWEEN LIFTING/LOCKING RING & SHELL ****
CP,1,UY,508,277          ! Start Threads
CP,2,UY,498,280
CP,3,UY,488,283
CP,4,UY,478,286
CP,5,UY,468,289
CP,6,UY,458,292

/COM **** BETWEEN BOLT & LOCKING RING ****
CP,7,UY,445,910
CP,8,UX,445,910
```

```
CP,9,UY,447,911
CP,10,UX,447,911
*DO,I,1,7
CP,10+I,UY,445+10*I,910+2*I
*ENDDO
*DO,I,1,7
CP,17+I,UY,447+10*I,911+2*I
*ENDDO
*DO,I,1,7
CP,24+I,UX,445+10*I,910+2*I
*ENDDO
*DO,I,1,7
CP,31+I,UX,447+10*I,911+2*I
*ENDDO
NALL
EALL

/COM **** ELEMENT GENERATION FOR SHELL ****
TYPE,1
MAT,1

/COM **** BOTTOM OF SHELL ****
E,1,2,22,21
E,2,3,23,22
EGEN,8,1,-1
E,10,11,30
E,21,22,42,41
E,22,23,43,42
EGEN,10,1,-1
E,11,31,30
E,11,32,31

/COM **** SHELL ****
E,50,51,54,53
EGEN,2,1,-1
EGEN,5,3,-2

/COM **** FIRST TRANSITION ELEMENTS ****
E,65,66,100
E,100,66,101
E,67,101,66

/COM **** SINGLE SHELL ****
E,100,101,103,102
EGEN,40,2,-1

/COM **** SECOND TRANSITION ELEMENTS ****
E,190,180,191
E,180,181,191
E,181,192,191

/COM **** TOP SHELL (DOUBLE ELEMENT) ****
E,190,191,194,193
EGEN,2,1,-1
EGEN,18,3,-2
E,244,245,986,985
```

```
EGEN,2,1,-1
E,256,257,988,987
E,257,258,989,988
E,985,986,981,980
EGEN,4,1,-1
E,980,981,248,247
EGEN,2,1,-1
E,982,983,260,249
E,983,984,261,260

/COM **** COLLAR TRANSITION & THREADED REGIONS ****
E,237,991,251,240
E,991,990,251
E,240,251,254,253
E,251,990,255,254
E,253,254,257,256
EGEN,2,1,-1
E,259,260,263,262
EGEN,2,1,-1
EGEN,12,3,-2
E,271,274,1000

/COM **** MERGE COINCIDENT NODES FOR SHELL ****
ESEL,S,TYPE,,1
NSLE
NUMMRG,NODE,
EALL
NALL
/COM **** END OF SHELL/COLLAR ELEMENT GENERATION ****

/COM **** LOCKING/LIFTING RING ELEMENTS ****
TYPE,3
MAT,1
E,411,412,402,401
EGEN,2,1,-1
EGEN,2,10,-2
E,413,888,876,403
E,881,404,876
E,888,881,876
E,888,414,881
E,881,882,877,404
E,414,889,882,881
E,882,883,878,877
E,889,890,883,882
E,883,884,405,878
E,890,415,884,883
E,884,885,879,405
E,415,891,885,884
E,885,886,880,879
E,891,892,886,885
E,886,887,406,880
E,892,416,887,886
E,423,900,888,413
E,893,414,888
E,900,893,888
E,900,424,893
```

```
E,893,894,889,414
E,424,901,894,893
E,894,895,890,889
E,901,902,895,894
E,895,896,415,890
E,902,425,896,895
E,896,897,891,415
E,425,903,897,896
E,897,898,892,891
E,903,904,898,897
E,898,899,416,892
E,904,426,899,898
E,431,432,422,421
E,905,423,422
E,432,905,422
E,432,433,905
E,905,906,900,423
E,433,908,906,905
E,906,907,424,900
E,908,434,907,906
E,441,442,432,431
EGEN,2,1,-1
E,443,908,433
E,443,444,434,908
E,451,452,442,441
EGEN,3,1,-1
EGEN,7,10,-3
E,454,912,910,444
E,464,914,912,454
E,474,916,914,464
E,484,918,916,474
E,494,920,918,484
E,504,922,920,494
E,514,924,922,504
E,458,448,911,913
E,468,458,913,915
E,478,468,915,917
E,488,478,917,919
E,498,488,919,921
E,508,498,921,923
E,518,508,923,925

/COM **** BOLT ****
TYPE,5
MAT,5
E,455,456,446,445
EGEN,8,10,-1
E,456,457,447,446
EGEN,8,10,-1
/COM********** END OF LOCKING/LIFTING RING **********

/COM **** SHIELD PLUG ELEMENTS ****
TYPE,2
MAT,1
E,602,622,621,601
EGEN,12,1,-1
```

```
EGEN,2,20,-12
EGEN,3,20,-11
EGEN,2,20,-10
E,707,717,716,706
EGEN,7,1,-1
E,717,737,736,716
EGEN,7,1,-1
E,731,751,750,730
EGEN,13,1,-1
E,749,769,768,748
EGEN,15,1,-1
E,767,787,786,766
EGEN,17,1,-1
EGEN,2,20,-17
E,818,825,824,817
EGEN,6,1,-1
EGEN,5,7,-6
E,853,860,859,852
EGEN,6,1,-1
E,860,867,866,859
EGEN,3,1,-1
E,867,872,871,866
EGEN,4,1,-1
/COM********** END OF SHIELD PLUG **********

/COM********** CONTACT ELEMENTS **********
/COM **** BETWEEN LOCKING RING & SHIELD PLUG ****
TYPE,4
REAL,4
E,806,401
E,807,411
E,808,421
E,809,431
E,810,441
E,811,451
E,812,461
E,813,471
E,814,481
E,815,491
E,816,501
E,817,511

/COM **** BETWEEN SHIELD PLUG & BOTTOM OF BOLT
REAL,5
E,845,525
E,852,526
E,859,527

/COM **** BETWEEN SHIELD PLUG & SHELL (ABOVE SEAL)
REAL,4
E,871,271
E,872,268
E,873,265
E,874,262

/COM **** BETWEEN SHIELD PLUG & SHELL (BELOW SEAL)
```

```
E,863,980

/COM **** BETWEEN SHIELD PLUG AND SEAL LIP
TYPE,4
REAL,6
E,247,862
E,248,870
E,249,875
/COM************** END GAP ELEMENTS **************

/COM************** BOUNDARY CONDITIONS AT AXIS (X=0) *************
CSYS,0
NSEL,S,LOC,X,0
D,ALL,UX,0
NALL
EALL
NSEL,S,NODE,,10
D,ALL,UY,O
NALL
EALL
SAVE
FINISH

!*****************************************************************
/COM*****************       SOLUTION PHASE       ***************
/SOLUTION

/COM **** APPLYING 40 PSI EXTERNAL PRESSURE ****
NALL
EALL
NSEL,S,LOC,X,0,11.425        ! Bottom Plate
NSEL,R,LOC,Y,-1.31,-1.33
SF,ALL,PRES,40
NALL
EALL
NSEL,S,LOC,X,11.422,12.01    ! 30 d Chamfer
NSEL,R,LOC,Y,-1.33,-0.31
SF,ALL,PRES,40
NALL
EALL
NSEL,S,LOC,X,11.99,12.01     ! Outside shell
NSEL,R,LOC,Y,-0.33,146.1
SF,ALL,PRES,40
NALL
EALL
NSEL,S,LOC,X,11.99,12.627    ! Outside Shell Transition
NSEL,R,LOC,Y,146.05,146.69
SF,ALL,PRES,40
NALL
EALL
NSEL,S,LOC,X,12.623,12.627   ! Outside Shell
NSEL,R,LOC,Y,146.67,156.01
SF,ALL,PRES,40
NALL
EALL
NSEL,S,LOC,X,12.24,12.626    ! Top of Shell
```

```
NSEL,R,LOC,Y,155.99,156.01
SF,ALL,PRES,40
NALL
EALL
NSEL,S,LOC,X,9.624,12.24      ! Top of Locking Ring
NSEL,R,LOC,Y,155.99,156.01
SF,ALL,PRES,40
NALL
EALL
NSEL,S,LOC,X,9.374,9.626      ! Transition to Lifting Ear
NSEL,R,LOC,Y,155.99,157.13
SF,ALL,PRES,40
NALL
EALL
NSEL,S,LOC,X,9.374,10.20      ! Underside of Lifting Ear
NSEL,R,LOC,Y,157.12,157.14
SF,ALL,PRES,40
NALL
EALL
NSEL,S,LOC,X,10.18,10.20      ! Side of Lifting Ear
NSEL,R,LOC,Y,157.12,158.14
SF,ALL,PRES,40
NALL
EALL
NSEL,S,LOC,X,7.93,10.20       ! Top of Lifting Ear
NSEL,R,LOC,Y,158.12,158.14
SF,ALL,PRES,40
NALL
EALL
NSEL,S,LOC,X,7.25,7.90        ! Top of Shield plug
NSEL,R,LOC,Y,158.12,158.14
SF,ALL,PRES,40
NALL
EALL
NSEL,S,LOC,X,7.26,7.27        ! Side of Siphon Port (Top)
NSEL,R,LOC,Y,157.12,158.14
SF,ALL,PRES,40
NALL
EALL
NSEL,S,LOC,X,5.88,7.27        ! Siphon Port Step (Top)
NSEL,R,LOC,Y,157.12,157.14
SF,ALL,PRES,40
NALL
EALL
NSEL,S,LOC,X,5.88,5.90        ! Side of Siphon Port (Mid)
NSEL,R,LOC,Y,156.13,157.14
SF,ALL,PRES,40
NALL
EALL
NSEL,S,LOC,X,5.4,5.9          ! Siphon Port Step (Mid)
NSEL,R,LOC,Y,156.13,156.15
SF,ALL,PRES,40
NALL
EALL
NSEL,S,LOC,X,5.46,5.47        ! Bottom Siphon Port (Side)
NSEL,R,LOC,Y,153.0,156.37
```

```
SF,ALL,PRES,40
NALL
EALL
NSEL,S,LOC,X,3.56,5.47        ! Bottom Siphon Port
NSEL,R,LOC,Y,153.0,153.2
SF,ALL,PRES,40
NALL
EALL
NSEL,S,LOC,X,3.55,3.57        ! Bottom Siphon Port (Side)
NSEL,R,LOC,Y,153.0,156.37
SF,ALL,PRES,40
NALL
EALL
NSEL,S,LOC,X,3.13,3.58        ! Siphon Port Step (Mid)
NSEL,R,LOC,Y,156.13,156.15
SF,ALL,PRES,40
NALL
EALL
NSEL,S,LOC,X,3.13,3.15        ! Side of Siphon Port (Mid)
NSEL,R,LOC,Y,156.13,157.14
SF,ALL,PRES,40
NALL
EALL
NSEL,S,LOC,X,1.75,3.15        ! Siphon Port Step (Top)
NSEL,R,LOC,Y,157.12,157.14
SF,ALL,PRES,40
NALL
EALL
NSEL,S,LOC,X,1.6,1.8          ! Side of Siphon Port (Top)
NSEL,R,LOC,Y,157.12,158.14
SF,ALL,PRES,40
NALL
EALL
NSEL,S,LOC,X,0,1.8            ! Top of Shield Plug
NSEL,R,LOC,Y,158.12,158.14
SF,ALL,PRES,40
NALL
EALL
SOLVE
SAVE
FINISH

/COM **** POSTPROCESSING ****
/POST1
SET,LAST
/TYPE,ALL,HIDC
/GLINE,ALL,0
RSYS,0
PLNSOL,S,INT
/DSCALE,,20
/REPLOT
LPATH,1,41                    ! Bottom Plate
PRSECT
LPATH,6,46
PRSECT
LPATH,10,50
```

```
PRSECT
LPATH,50,52          ! Lower Shell
PRSECT
LPATH,62,64
PRSECT
LPATH,65,67
PRSECT
LPATH,100,101        ! Mid Shell
PRSECT
LPATH,122,123
PRSECT
LPATH,134,135
PRSECT
LPATH,156,157
PRSECT
LPATH,170,171
PRSECT
LPATH,180,181
PRSECT
LPATH,202,204        ! Upper Shell
PRSECT
LPATH,235,237
PRSECT
LPATH,985,989
PRSECT
LPATH,262,264
PRSECT
LPATH,277,279
PRSECT
LPATH,292,294
PRSECT
LPATH,601,641        ! Shield Plug
PRSECT
LPATH,601,613
PRSECT
LPATH,603,703
PRSECT
LPATH,606,706
PRSECT
LPATH,766,806
PRSECT
LPATH,748,808
PRSECT
LPATH,730,810
PRSECT
LPATH,736,815
PRSECT
LPATH,869,874
PRSECT
LPATH,870,875
PRSECT
LPATH,431,434        ! Locking Ring
PRSECT
LPATH,406,426
PRSECT
LPATH,404,424
```

PRSECT
SAVE

COMPUTER RUN COVER SHEET

Project Number:	KH-8009-8
Computer Code:	ANSYS®-PC
Software Version:	5.0A
Computer System:	MS-DOS, Pentium® Processor
Computer Run File Number:	KH-8009-8-09
Unique Computer Run Filename:	POC1.out
Run Description:	Load Case 1 Output
Run Date / Time:	27 March 1997 2:11:24 PM

Prepared By: Zachary G. Sargent Date 4/18/97

Checked By: Joe Nichols Date 4/17/97

COMPUTER RUN COVER SHEET

Project Number:	KH-8009-8
Computer Code:	ANSYS®-PC
Software Version:	5.0A
Computer System:	MS-DOS, Pentium® Processor
Computer Run File Number:	KH-8009-8-09
Unique Computer Run Filename:	POC2.inp
Run Description:	Load Case 2: 15 psi, 375°C
Creation Date / Time:	27 March 1997 2:09:06 PM

Prepared By: Zachary G. Sargent — Date: 4/18/97

Checked By: Joe Nichols — Date: 4/17/97

LISTING OF POC2.INP FILE

```
/BATCH,LIST
/FILENAM,POC2
/PREP7
/TITLE,MCO DESIGN- 375 DEGREES C, 15 PSI EXTERNAL PRESSURE, NO LIFT

TREF,70
TUNIF,707

/COM **** ELEMENT TYPES ****
ET,1,42,,,1              ! Shell
ET,2,42,,,1              ! Shield Plug
ET,3,42,,,1              ! Lifting & Locking Ring
ET,4,12                  ! Gap Elements Between Shield Plug & Shell
KEYOPT,4,7,1
ET,5,42,,,1              ! Bolt

/COM **** REAL CONSTANTS FOR GAP ELEMENTS ****
R,4,-90,1.0e8,-0.06,3.0      ! Shell/Shield Plug, Initially Open .06"
R,5,0,1.0e8,2.95e-03         ! L. Ring/Shield Plug, Under Bolt, Preloaded
R,6,0,1.0E8,0,2.0            ! Sealing Surface, closed

/COM ************ MATERIAL PROPERTIES **************
MP,DENS,1,490/1728           ! 304L SS
MP,NUXY,1,0.3

MP,DENS,5,490/1728           ! SA193 Grade B8M
MP,NUXY,5,0.3

/COM **** DEFINING TEMPERATURES FOR MPDATA ****
MPTEMP,1, 70,100,200,300,400,500
MPTEMP,7,600,650,700,750

/COM **** DEFINING ELASTIC MODULI FOR 304L & SA-193 ****
MPDATA,EX,1,1,28.3e+06,28.1e+06,27.6e+06,27.0e+06,26.5e+06,25.8e+06
MPDATA,EX,1,7,25.3e+06,25.1e+06,24.8e+06,24.5e+06
/COM                         ! SA-193
MPDATA,EX,5,1,28.3e+06,28.1e+06,27.6e+06,27.0e+06,26.5e+06,25.8e+06
MPDATA,EX,5,7,25.3e+06,25.1e+06,24.8e+06,24.5e+06

/COM **** MEAN COEFFICIENTS OF THERMAL EXPANSION (in./in./(F) ****
! SA240 Gr 304L
MPDATA,ALPX,1,1,0,8.55e-06,8.79e-06,9.00e-06,9.19e-06,9.37e-06
MPDATA,ALPX,1,7,9.53e-06,9.61e-06,9.69e-06,9.76e-06

! SA193 Gr B8M
MPDATA,ALPX,5,1,0,8.54e-06,8.76e-06,8.97e-06,9.21e-06,9.42e-06
MPDATA,ALPX,5,7,9.60e-06,9.69e-06,9.76e-06,9.81e-06

/COM************ SHELL GEOMETRY ***************
IR=11.5                  ! Internal Shell Radius @ Bottom
OR=12.000                ! Shell Outside Radius @ Bottom
IR2 = 12.02              ! Inside Radius at Collar Sealing Surface
OR2 = 12.625             ! Outside Radius at Collar Sealing Surface
```

```
IR3 = 12.25              ! Inside Radius at Collar-Lifting Ring Weld

/COM **** BOTTOM COVER PLATE  [DWG SK-2-300378] ****
N,1,,-1.32               ! Row 1
N,2,1.25,-1.32
N,3,2.13,-1.32
N,10,11.423,-1.32
FILL

N,41,0.00,-0.44          ! Row 3
N,42,1.25,-0.44
N,43,2.13,0.44
N,50,IR,0.44
FILL,43,50
N,52,OR,0.44
FILL,50,52

FILL,1,41,1,21,1,10      ! Middle Row
FILL,10,50,1,30
N,32,12,-0.32
FILL,30,32
FILL,10,32,1,11
N,53,IR,1.17
N,55,OR,1.17             ! Shell Stub/Weld
FILL,53,55

/COM **** SHELL [DWGS SK-2-300379 & SK-2-300461] ****
N,65,IR,6.68
N,67,OR,6.68
FILL
FILL,53,65,3,,3,3,1

/COM **** SINGLE ROW SHELL ****
N,100,IR,7.18            ! Inside
N,140,IR,71.68
N,180,IR,136.68

N,101,OR,7.18            ! Outside
N,141,OR,71.68
N,181,OR,136.68
FILL,100,140,20,,2,2,1,2.0
FILL,140,180,19,,2,2,1,.5

/COM **** DOUBLE ROW SHELL ****
N,190,IR,137.18           ! Transition to Double Row
N,192,OR,137.18
FILL

/COM **** BASE OF CASK THROAT--ELEVATION: 138 INCHES ****
N,217,IR,142.68           ! Transition to Double Row
N,219,OR,142.68
FILL
FILL,190,217,8,,3,3,1     ! Vertical Fill

/COM **** BOTTOM OF COLLAR TRANSITION ****
N,235,IR,146.06           ! Start of Transition to Large O.D &
```

```
N,237,OR,146.06              ! Assumed Location of Shield Plug Taper
FILL
N,238,IR,146.68
N,240,OR,146.68
FILL                  ! Horizontal Fill
FILL,217,235,5,,3,3,1        ! Vertical Fill

/COM **** TOP OF COLLAR TRANSITION ****
N,241,IR,147.31             ! End of Transition to Large O.D &
N,243,OR,147.31              ! Assumed Location of Shield Plug Taper
FILL                  ! Horizontal Fill
NGEN,2,3,241,243,1,,0.75

/COM **** COLLAR SEALING SURFACE ****
N,247,IR,149.63             ! Inside Radius of Sealing Surface
N,249,IR2,149.63             ! Outside Radius at Sealing Surface
FILL                  ! Horizontal Fill

/COM **** THICK WALL AT COLLAR TRANSITION ****
NGEN,2,10,240,249,3          ! Nodes 250-259 Coincident w/240-249 (by 3)
N,255,OR2,147.31             ! Outside Surface
N,261,OR2,149.63             ! Outside Surface
N,258,OR2,148.06
N,980,IR,149.38
N,981,11.755,149.38
N,982,IR2,149.38
N,983,12.317,149.38
N,984,OR2,149.38
N,990,OR2,146.68
FILL,240,990,1,251
NGEN,2,5,980,984,1,,-0.66
FILL,246,258,1,257
FILL,253,255,1,,1,3,3
FILL,237,990,1,991

/COM **** COLLAR AT BOTTOM EDGE OF PLUG (.155" above Sealing Surface) ****
NGEN,2,3,259,,,,0.245        ! Nodes 262

/COM **** COLLAR AT TOP EDGE OF PLUG (2" above bottom Edge) ****
NGEN,2,9,262,,,,2.00         ! Nodes 271
FILL,262,271,2

/COM **** COLLAR AT BASE OF THREADS ****
N,274,IR3,152.00
N,1000,IR2,152.00

/COM **** TOP TO COLLAR (WELD CLOSURE) ****
N,295,IR3,156.00
FILL,274,295
NGEN,3,1,259,295,3,(OR2-IR2)/2
NGEN,3,1,274,295,3,(OR2-IR3)/2

/COM********** LOCKING & LIFTING RING GEOMETRY **********
RING1=7.94
RING2=9.375
RING3=9.625
```

```
RING4=10.19
RING5=12.23
LOCAL,11,0,,152.00          ! Local System z=0 at Base of Ring
CSYS,11

/COM **** TOP EDGE ****
N,401,RING1,6.13
CSYS,O
N,404,9.375,158.13
FILL,401,404,,,1
N,406,RING4,158.13
FILL,404,406,,,1            ! Top Edge

/COM **** LIFTING SURFACE ****
CSYS,11
N,421,RING1,5.13
N,424,RING2,5.13
FILL,421,424
N,426,RING4,5.13
FILL,424,426
FILL,401,421,1,,10,6,1
N,431,RING1,6.13-1.56
N,434,RING2,6.13-1.56
FILL

/COM **** BOLTING SURFACE ****
N,441,RING1,4
N,444,RING3,4
FILL
N,445,10.9375-.6875,4        ! Inside Edge of Bolt Hole
N,447,10.9375+.6875,4        ! Outside Edge of Bolt Hole
FILL
N,910,10.9375-.6875,4
N,911,10.9375+.6875,4
N,448,RING5,4               ! O.D of Ring
CSYS,0                      ! Bolt Extension
N,924,10.25,152.00          ! Double Nodes @ Bolt for Gap elements
N,925,11.625,152.00
FILL,910,924,6,,2
FILL,911,925,6,,2
N,525,10.25,151.874         ! Bottom of Bolt Extension
N,527,11.625,151.874
FILL

/COM **** BOTTOM OF LIFTING/LOCKING RING ****
CSYS,11
NGEN,2,70,441,448,1,,-4      ! Bottom Surface of Lifting/Locking Ring
FILL,441,511,6,,10,8,1       ! Fill in Lifting/Locking Ring

/COM************ SHIELD PLUG (offset y by 158.25) **************
LOCAL,20,0,,158.13
TYPE,2
PLUGR1=11.975
PLUGR2=11.45
PLUGR3=11.25
PLUGR4=7.89
```

```
/COM **** NODES AT PLUG AXIS (r=0) ****
N,601
N,602,0,-1
N,603,0,-1.994
N,606,0,-4.994
FILL,603,606,2,604
N,607,0,-6.25
N,610,0,-8.25
FILL,607,610,2,608
N,611,0,-8.75
N,613,0,-10.5
FILL,611,613

/COM **** NODAL GENERATION ****
NGEN,2,20,601,613,1,0.8825
NGEN,2,20,621,633,1,0.8825          ! Id Large Opening
NGEN,2,20,642,653,1,0.6875
NGEN,2,20,662,673,1,0.6875          ! Id Medium Opening
NGEN,2,20,683,693,1,0.4235          ! Id Small Opening
NGEN,2,10,706,713,1,0.9515          ! Center of Opening

N,730,5.4665,-1.994                 ! Od Small Opening
N,736,5.4665,-4.994
FILL,730,736,5,731
N,737,5.4665,-6.25
N,740,5.4665,-8.25
FILL,737,740,2,738
N,741,5.4665,-8.75
N,743,5.4665,-10.5
FILL,741,743
N,748,5.89,-1.0
NGEN,2,20,730,743,1,0.4235
FILL,748,750
N,766,7.265,0
NGEN,2,20,748,763,1,1.375
FILL,766,768
NGEN,3,20,766,768,1,0.3125
N,789,7.5775,-1.56
N,796,7.5775,-5.56
FILL,789,796,6
NGEN,2,20,789,796,1,0.3125
NGEN,3,20,777,783,1,0.3125

/COM **** UNDER LOCKING RING ****
N,824,8.5017,-6.25
N,827,8.5017,-8.25
FILL
N,828,8.5017,-8.75
N,830,8.5017,-10.5
FILL
NGEN,3,7,824,830,1,0.5616
NGEN,2,7,838,844,1,0.625
NGEN,2,7,845,851,1,0.6875      ! Under Bolt
N,859,11.625,-6.25
N,860,11.625,-6.917
```

```
N,861,11.625,-7.584
N,862,PLUGR2,-8.25
N,863,PLUGR2,-8.75
N,865,PLUGR3,-10.5
FILL,863,865,1
N,866,PLUGR1-0.288,-6.25
N,869,PLUGR1-0.288,-8.25
FILL,866,869,2
N,870,PLUGR1-0.288,-8.476
NGEN,2,5,866,870,1,0.288

/COM **** REFINING LIFTING EAR ****
CSYS,0
N,877,9.53,158.13
N,889,9.53,157.63
N,901,9.53,157.13
FILL,403,404,1,876
FILL,413,414,1,888
FILL,423,424,1,900
FILL,877,405,1,878
FILL,405,406,2,879,1
FILL,889,415,1,890
FILL,415,416,2,891,1
FILL,404,414,1,881
FILL,877,889,1,882
FILL,878,890,1,883
FILL,405,415,1,884
FILL,879,891,1,885
FILL,880,892,1,886
FILL,406,416,1,887
FILL,889,901,1,894
FILL,414,424,1,893
FILL,901,425,1,902
FILL,890,902,1,895
FILL,415,425,1,896
FILL,425,426,2,903,1
FILL,891,903,1,897
FILL,892,904,1,898
FILL,416,426,1,899
FILL,424,434,1,907
FILL,433,434,1,908
FILL,423,433,1,905
FILL,905,907

/COM **** COUPLING NODES ****
/COM **** BETWEEN LIFTING/LOCKING RING & SHELL ****
CP,1,UY,508,277          ! Start Threads
CP,2,UY,498,280
CP,3,UY,488,283
CP,4,UY,478,286
CP,5,UY,468,289
CP,6,UY,458,292

/COM **** BETWEEN BOLT & LOCKING RING ****
CP,7,UY,445,910
CP,8,UX,445,910
```

```
CP,9,UY,447,911
CP,10,UX,447,911
*DO,I,1,7
CP,10+I,UY,445+10*I,910+2*I
*ENDDO
*DO,I,1,7
CP,17+I,UY,447+10*I,911+2*I
*ENDDO
*DO,I,1,7
CP,24+I,UX,445+10*I,910+2*I
*ENDDO
*DO,I,1,7
CP,31+I,UX,447+10*I,911+2*I
*ENDDO
NALL
EALL

/COM **** ELEMENT GENERATION FOR SHELL ****
TYPE,1
MAT,1

/COM **** BOTTOM OF SHELL ****
E,1,2,22,21
E,2,3,23,22
EGEN,8,1,-1
E,10,11,30
E,21,22,42,41
E,22,23,43,42
EGEN,10,1,-1
E,11,31,30
E,11,32,31

/COM **** SHELL ****
E,50,51,54,53
EGEN,2,1,-1
EGEN,5,3,-2

/COM **** FIRST TRANSITION ELEMENTS ****
E,65,66,100
E,100,66,101
E,67,101,66

/COM **** SINGLE SHELL ****
E,100,101,103,102
EGEN,40,2,-1

/COM **** SECOND TRANSITION ELEMENTS ****
E,190,180,191
E,180,181,191
E,181,192,191

/COM **** TOP SHELL (DOUBLE ELEMENT) ****
E,190,191,194,193
EGEN,2,1,-1
EGEN,18,3,-2
E,244,245,986,985
```

```
EGEN,2,1,-1
E,256,257,988,987
E,257,258,989,988
E,985,986,981,980
EGEN,4,1,-1
E,980,981,248,247
EGEN,2,1,-1
E,982,983,260,249
E,983,984,261,260

/COM **** COLLAR TRANSITION & THREADED REGIONS ****
E,237,991,251,240
E,991,990,251
E,240,251,254,253
E,251,990,255,254
E,253,254,257,256
EGEN,2,1,-1
E,259,260,263,262
EGEN,2,1,-1
EGEN,12,3,-2
E,271,274,1000

/COM **** MERGE COINCIDENT NODES FOR SHELL ****
ESEL,S,TYPE,,1
NSLE
NUMMRG,NODE,
EALL
NALL
/COM **** END OF SHELL/COLLAR ELEMENT GENERATION ****

/COM **** LOCKING/LIFTING RING ELEMENTS ****
TYPE,3
MAT,1
E,411,412,402,401
EGEN,2,1,-1
EGEN,2,10,-2
E,413,888,876,403
E,881,404,876
E,888,881,876
E,888,414,881
E,881,882,877,404
E,414,889,882,881
E,882,883,878,877
E,889,890,883,882
E,883,884,405,878
E,890,415,884,883
E,884,885,879,405
E,415,891,885,884
E,885,886,880,879
E,891,892,886,885
E,886,887,406,880
E,892,416,887,886
E,423,900,888,413
E,893,414,888
E,900,893,888
E,900,424,893
```

```
E,893,894,889,414
E,424,901,894,893
E,894,895,890,889
E,901,902,895,894
E,895,896,415,890
E,902,425,896,895
E,896,897,891,415
E,425,903,897,896
E,897,898,892,891
E,903,904,898,897
E,898,899,416,892
E,904,426,899,898
E,431,432,422,421
E,905,423,422
E,432,905,422
E,432,433,905
E,905,906,900,423
E,433,908,906,905
E,906,907,424,900
E,908,434,907,906
E,441,442,432,431
EGEN,2,1,-1
E,443,908,433
E,443,444,434,908
E,451,452,442,441
EGEN,3,1,-1
EGEN,7,10,-3
E,454,912,910,444
E,464,914,912,454
E,474,916,914,464
E,484,918,916,474
E,494,920,918,484
E,504,922,920,494
E,514,924,922,504
E,458,448,911,913
E,468,458,913,915
E,478,468,915,917
E,488,478,917,919
E,498,488,919,921
E,508,498,921,923
E,518,508,923,925

/COM **** BOLT ****
TYPE,5
MAT,5
E,455,456,446,445
EGEN,8,10,-1
E,456,457,447,446
EGEN,8,10,-1
/COM********** END OF LOCKING/LIFTING RING **********

/COM **** SHIELD PLUG ELEMENTS ****
TYPE,2
MAT,1
E,602,622,621,601
EGEN,12,1,-1
```

```
EGEN,2,20,-12
EGEN,3,20,-11
EGEN,2,20,-10
E,707,717,716,706
EGEN,7,1,-1
E,717,737,736,716
EGEN,7,1,-1
E,731,751,750,730
EGEN,13,1,-1
E,749,769,768,748
EGEN,15,1,-1
E,767,787,786,766
EGEN,17,1,-1
EGEN,2,20,-17
E,818,825,824,817
EGEN,6,1,-1
EGEN,5,7,-6
E,853,860,859,852
EGEN,6,1,-1
E,860,867,866,859
EGEN,3,1,-1
E,867,872,871,866
EGEN,4,1,-1
/COM********** END OF SHIELD PLUG **********

/COM********** CONTACT ELEMENTS **********
/COM **** BETWEEN LOCKING RING & SHIELD PLUG ****
TYPE,4
REAL,4
E,806,401
E,807,411
E,808,421
E,809,431
E,810,441
E,811,451
E,812,461
E,813,471
E,814,481
E,815,491
E,816,501
E,817,511

/COM **** BETWEEN SHIELD PLUG & BOTTOM OF BOLT
REAL,5
E,845,525
E,852,526
E,859,527

/COM **** BETWEEN SHIELD PLUG & SHELL (ABOVE SEAL)
REAL,4
E,871,271
E,872,268
E,873,265
E,874,262

/COM **** BETWEEN SHIELD PLUG & SHELL (BELOW SEAL)
```

```
E,863,980

/COM **** BETWEEN SHIELD PLUG AND SEAL LIP
TYPE,4
REAL,6
E,247,862
E,248,870
E,249,875
/COM************ END GAP ELEMENTS **************

/COM************ BOUNDARY CONDITIONS AT AXIS (X=0) ************
CSYS,0
NSEL,S,LOC,X,0
D,ALL,UX,0
NALL
EALL
NSEL,S,NODE,,10
D,ALL,UY,O
NALL
EALL
SAVE
FINISH


!*****************************************************************
/COM***************        SOLUTION PHASE        **************
/SOLUTION

/COM **** APPLYING 15 PSI EXTERNAL PRESSURE ****
NALL
EALL
NSEL,S,LOC,X,0,11.425          ! Bottom Plate
NSEL,R,LOC,Y,-1.31,-1.33
SF,ALL,PRES,15
NALL
EALL
NSEL,S,LOC,X,11.422,12.01      ! 30 d Chamfer
NSEL,R,LOC,Y,-1.33,-0.31
SF,ALL,PRES,15
NALL
EALL
NSEL,S,LOC,X,11.99,12.01       ! Outside shell
NSEL,R,LOC,Y,-0.33,146.1
SF,ALL,PRES,15
NALL
EALL
NSEL,S,LOC,X,11.99,12.627      ! Outside Shell Transition
NSEL,R,LOC,Y,146.05,146.69
SF,ALL,PRES,15
NALL
EALL
NSEL,S,LOC,X,12.623,12.627     ! Outside Shell
NSEL,R,LOC,Y,146.67,156.01
SF,ALL,PRES,15
NALL
EALL
```

```
NSEL,S,LOC,X,12.24,12.626     ! Top of Shell
NSEL,R,LOC,Y,155.99,156.01
SF,ALL,PRES,15
NALL
EALL
NSEL,S,LOC,X,9.624,12.24      ! Top of Locking Ring
NSEL,R,LOC,Y,155.99,156.01
SF,ALL,PRES,15
NALL
EALL
NSEL,S,LOC,X,9.374,9.626      ! Transition to Lifting Ear
NSEL,R,LOC,Y,155.99,157.13
SF,ALL,PRES,15
NALL
EALL
NSEL,S,LOC,X,9.374,10.20      ! Underside of Lifting Ear
NSEL,R,LOC,Y,157.12,157.14
SF,ALL,PRES,15
NALL
EALL
NSEL,S,LOC,X,10.18,10.20      ! Side of Lifting Ear
NSEL,R,LOC,Y,157.12,158.14
SF,ALL,PRES,15
NALL
EALL
NSEL,S,LOC,X,7.93,10.20       ! Top of Lifting Ear
NSEL,R,LOC,Y,158.12,158.14
SF,ALL,PRES,15
NALL
EALL
NSEL,S,LOC,X,7.25,7.90        ! Top of Shield plug
NSEL,R,LOC,Y,158.12,158.14
SF,ALL,PRES,15
NALL
EALL
NSEL,S,LOC,X,7.26,7.27        ! Side of Siphon Port (Top)
NSEL,R,LOC,Y,157.12,158.14
SF,ALL,PRES,15
NALL
EALL
NSEL,S,LOC,X,5.88,7.27        ! Siphon Port Step (Top)
NSEL,R,LOC,Y,157.12,157.14
SF,ALL,PRES,15
NALL
EALL
NSEL,S,LOC,X,5.88,5.90        ! Side of Siphon Port (Mid)
NSEL,R,LOC,Y,156.13,157.14
SF,ALL,PRES,15
NALL
EALL
NSEL,S,LOC,X,5.4,5.9          ! Siphon Port Step (Mid)
NSEL,R,LOC,Y,156.13,156.15
SF,ALL,PRES,15
NALL
EALL
NSEL,S,LOC,X,5.46,5.47        ! Bottom Siphon Port (Side)
```

```
NSEL,R,LOC,Y,153.0,156.37
SF,ALL,PRES,15
NALL
EALL
NSEL,S,LOC,X,3.56,5.47      ! Bottom Siphon Port
NSEL,R,LOC,Y,153.0,153.2
SF,ALL,PRES,15
NALL
EALL
NSEL,S,LOC,X,3.55,3.57      ! Bottom Siphon Port (Side)
NSEL,R,LOC,Y,153.0,156.37
SF,ALL,PRES,15
NALL
EALL
NSEL,S,LOC,X,3.13,3.58      ! Siphon Port Step (Mid)
NSEL,R,LOC,Y,156.13,156.15
SF,ALL,PRES,15
NALL
EALL
NSEL,S,LOC,X,3.13,3.15      ! Side of Siphon Port (Mid)
NSEL,R,LOC,Y,156.13,157.14
SF,ALL,PRES,15
NALL
EALL
NSEL,S,LOC,X,1.75,3.15      ! Siphon Port Step (Top)
NSEL,R,LOC,Y,157.12,157.14
SF,ALL,PRES,15
NALL
EALL
NSEL,S,LOC,X,1.6,1.8        ! Side of Siphon Port (Top)
NSEL,R,LOC,Y,157.12,158.14
SF,ALL,PRES,15
NALL
EALL
NSEL,S,LOC,X,0,1.8          ! Top of Shield Plug
NSEL,R,LOC,Y,158.12,158.14
SF,ALL,PRES,15
NALL
EALL
SOLVE
SAVE
FINISH


/COM **** POSTPROCESSING ****
/POST1
SET,LAST
/TYPE,ALL,HIDC
/GLINE,ALL,0
RSYS,0
PLNSOL,S,INT
/DSCALE,,20
/REPLOT
LPATH,1,41                  ! Bottom Plate
PRSECT
LPATH,6,46
```

```
PRSECT
LPATH,10,50
PRSECT
LPATH,50,52          ! Lower Shell
PRSECT
LPATH,62,64
PRSECT
LPATH,65,67
PRSECT
LPATH,100,101        ! Mid Shell
PRSECT
LPATH,122,123
PRSECT
LPATH,134,135
PRSECT
LPATH,156,157
PRSECT
LPATH,170,171
PRSECT
LPATH,180,181
PRSECT
LPATH,202,204        ! Upper Shell
PRSECT
LPATH,235,237
PRSECT
LPATH,985,989
PRSECT
LPATH,262,264
PRSECT
LPATH,277,279
PRSECT
LPATH,292,294
PRSECT
LPATH,601,641        ! Shield Plug
PRSECT
LPATH,601,613
PRSECT
LPATH,603,703
PRSECT
LPATH,606,706
PRSECT
LPATH,766,806
PRSECT
LPATH,748,808
PRSECT
LPATH,730,810
PRSECT
LPATH,736,815
PRSECT
LPATH,869,874
PRSECT
LPATH,870,875
PRSECT
LPATH,431,434        ! Locking Ring
PRSECT
LPATH,406,426
```

```
PRSECT
LPATH,404,424
PRSECT
PRSECT
SAVE
```

COMPUTER RUN COVER SHEET

Project Number:	KH-8009-8
Computer Code:	ANSYS®-PC
Software Version:	5.0A
Computer System:	MS-DOS, Pentium® Processor
Computer Run File Number:	KH-8009-8-09
Unique Computer Run Filename:	POC2.out
Run Description:	Load Case 2 Output
Run Date / Time:	27 March 1997 2:16:10 PM

Prepared By: Zachary G. Sargent Date 4/18/97

Checked By: Joe Nichols Date 4/17/97

COMPUTER RUN COVER SHEET

Project Number:	KH-8009-8
Computer Code:	ANSYS®-PC
Software Version:	5.0A
Computer System:	MS-DOS, Pentium® Processor
Computer Run File Number:	KH-8009-8-09
Unique Computer Run Filename:	MCO375.inp
Run Description:	Load Case 3: 189 psi, 375°C
Creation Date / Time:	27 March 1997 2:08:16 PM

Prepared By: Zachary G. Sargent Date 4/18/97

Checked By: Joe Nichols Date 4/17/97

LISTING OF MCO375.INP FILE

```
/BATCH,LIST
/FILENAM,MCO375
/PREP7
/TITLE,MCO DESIGN- 375 DEGREES C, 189 PSI PRESSURE

TREF,70
TUNIF,707

/COM **** ELEMENT TYPES ****
ET,1,42,,,1              ! Shell
ET,2,42,,,1              ! Shield Plug
ET,3,42,,,1              ! Lifting & Locking Ring
ET,4,12                  ! Gap Elements Between Shield Plug & Shell
KEYOPT,4,7,1
ET,5,42,,,1              ! Bolt

/COM **** REAL CONSTANTS FOR GAP ELEMENTS ****
R,4,-90,1.0e8,-0.06,3.0      ! Shell/Shield Plug, Initially Open .06"
R,5,0,1.0e8,2.95e-03         ! L. Ring/Shield Plug, Under Bolt, Preloaded
R,6,0,1.0e8,0,2.0            ! Sealing Surface, initially closed

/COM ************ MATERIAL PROPERTIES **************
MP,DENS,1,490/1728           ! 304L SS
MP,NUXY,1,0.3

MP,DENS,5,490/1728           ! SA193 Grade B8M
MP,NUXY,5,0.3

/COM **** DEFINING TEMPERATURES FOR MPDATA ****
MPTEMP,1, 70,100,200,300,400,500
MPTEMP,7,600,650,700,750

/COM **** DEFINING ELASTIC MODULI FOR 304L & SA-193 ****
MPDATA,EX,1,1,28.3e+06,28.1e+06,27.6e+06,27.0e+06,26.5e+06,25.8e+06
MPDATA,EX,1,7,25.3e+06,25.1e+06,24.8e+06,24.5e+06
/COM                         ! SA-193
MPDATA,EX,5,1,28.3e+06,28.1e+06,27.6e+06,27.0e+06,26.5e+06,25.8e+06
MPDATA,EX,5,7,25.3e+06,25.1e+06,24.8e+06,24.5e+06

/COM **** MEAN COEFFICIENTS OF THERMAL EXPANSION (in./in./(F) ****
! SA240 Gr 304L
MPDATA,ALPX,1,1,0,8.55e-06,8.79e-06,9.00e-06,9.19e-06,9.37e-06
MPDATA,ALPX,1,7,9.53e-06,9.61e-06,9.69e-06,9.76e-06

! SA193 Gr B8M
MPDATA,ALPX,5,1,0,8.54e-06,8.76e-06,8.97e-06,9.21e-06,9.42e-06
MPDATA,ALPX,5,7,9.60e-06,9.69e-06,9.76e-06,9.81e-06

/COM************ SHELL GEOMETRY ***************
IR=11.5                  ! Internal Shell Radius @ Bottom
OR=12.000                ! Shell Outside Radius @ Bottom
IR2 = 12.02              ! Inside Radius at Collar Sealing Surface
OR2 = 12.625             ! Outside Radius at Collar Sealing Surface
```

```
IR3 = 12.25              ! Inside Radius at Collar-Lifting Ring Weld

/COM **** BOTTOM COVER PLATE  [DWG SK-2-300378] ****
N,1,,-1.32               ! Row 1
N,2,1.25,-1.32
N,3,2.13,-1.32
N,10,11.423,-1.32
FILL

N,41,0.00,-0.44          ! Row 3
N,42,1.25,-0.44
N,43,2.13,0.44
N,50,IR,0.44
FILL,43,50
N,52,OR,0.44
FILL,50,52

FILL,1,41,1,21,1,10      ! Middle Row
FILL,10,50,1,30
N,32,12,-0.32
FILL,30,32
FILL,10,32,1,11
N,53,IR,1.17
N,55,OR,1.17             ! Shell Stub/Weld
FILL,53,55

/COM **** SHELL [DWGS SK-2-300379 & SK-2-300461] ****
N,65,IR,6.68
N,67,OR,6.68
FILL
FILL,53,65,3,,3,3,1

/COM **** SINGLE ROW SHELL ****
N,100,IR,7.18            ! Inside
N,140,IR,71.68
N,180,IR,136.68

N,101,OR,7.18            ! Outside
N,141,OR,71.68
N,181,OR,136.68
FILL,100,140,20,,2,2,1,2.0
FILL,140,180,19,,2,2,1,.5

/COM **** DOUBLE ROW SHELL ****
N,190,IR,137.18           ! Transition to Double Row
N,192,OR,137.18
FILL

/COM **** BASE OF CASK THROAT--ELEVATION: 138 INCHES ****
N,217,IR,142.68           ! Transition to Double Row
N,219,OR,142.68
FILL
FILL,190,217,8,,3,3,1     ! Vertical Fill

/COM **** BOTTOM OF COLLAR TRANSITION ****
N,235,IR,146.06           ! Start of Transition to Large O.D &
```

```
N,237,OR,146.06              ! Assumed Location of Shield Plug Taper
FILL
N,238,IR,146.68
N,240,OR,146.68
FILL                  ! Horizontal Fill
FILL,217,235,5,,3,3,1        ! Vertical Fill

/COM **** TOP OF COLLAR TRANSITION ****
N,241,IR,147.31            ! End of Transition to Large O.D &
N,243,OR,147.31            ! Assumed Location of Shield Plug Taper
FILL                  ! Horizontal Fill
NGEN,2,3,241,243,1,,0.75

/COM **** COLLAR SEALING SURFACE ****
N,247,IR,149.63            ! Inside Radius of Sealing Surface
N,249,IR2,149.63           ! Outside Radius at Sealing Surface
FILL                  ! Horizontal Fill

/COM **** THICK WALL AT COLLAR TRANSITION ****
NGEN,2,10,240,249,3          ! Nodes 250-259 Coincident w/240-249 (by 3)
N,255,OR2,147.31           ! Outside Surface
N,261,OR2,149.63           ! Outside Surface
N,258,OR2,148.06
N,980,IR,149.38
N,981,11.755,149.38
N,982,IR2,149.38
N,983,12.317,149.38
N,984,OR2,149.38
N,990,OR2,146.68
FILL,240,990,1,251
NGEN,2,5,980,984,1,,-0.66
FILL,246,258,1,257
FILL,253,255,1,,1,3,3
FILL,237,990,1,991

/COM **** COLLAR AT BOTTOM EDGE OF PLUG (.155" above Sealing Surface) ****
NGEN,2,3,259,,,,0.245        ! Nodes 262

/COM **** COLLAR AT TOP EDGE OF PLUG (2" above bottom Edge) ****
NGEN,2,9,262,,,,2.00         ! Nodes 271
FILL,262,271,2

/COM **** COLLAR AT BASE OF THREADS ****
N,274,IR3,152.00
N,1000,IR2,152.00

/COM **** TOP TO COLLAR (WELD CLOSURE) ****
N,295,IR3,156.00
FILL,274,295
NGEN,3,1,259,295,3,(OR2-IR2)/2
NGEN,3,1,274,295,3,(OR2-IR3)/2

/COM********** LOCKING & LIFTING RING GEOMETRY **********
RING1=7.94
RING2=9.375
RING3=9.625
```

```
RING4=10.19
RING5=12.23
LOCAL,11,0,,152.00          ! Local System z=0 at Base of Ring
CSYS,11

/COM **** TOP EDGE ****
N,401,RING1,6.13
CSYS,O
N,404,9.375,158.13
FILL,401,404,,,1
N,406,RING4,158.13
FILL,404,406,,,1            ! Top Edge

/COM **** LIFTING SURFACE ****
CSYS,11
N,421,RING1,5.13
N,424,RING2,5.13
FILL,421,424
N,426,RING4,5.13
FILL,424,426
FILL,401,421,1,,10,6,1
N,431,RING1,6.13-1.56
N,434,RING2,6.13-1.56
FILL

/COM **** BOLTING SURFACE ****
N,441,RING1,4
N,444,RING3,4
FILL
N,445,10.9375-.6875,4        ! Inside Edge of Bolt Hole
N,447,10.9375+.6875,4        ! Outside Edge of Bolt Hole
FILL
N,910,10.9375-.6875,4
N,911,10.9375+.6875,4
N,448,RING5,4               ! O.D of Ring
CSYS,0                      ! Bolt Extension
N,924,10.25,152.00          ! Double Nodes @ Bolt for Gap elements
N,925,11.625,152.00
FILL,910,924,6,,2
FILL,911,925,6,,2
N,525,10.25,151.874         ! Bottom of Bolt Extension
N,527,11.625,151.874
FILL

/COM **** BOTTOM OF LIFTING/LOCKING RING ****
CSYS,11
NGEN,2,70,441,448,1,,-4      ! Bottom Surface of Lifting/Locking Ring
FILL,441,511,6,,10,8,1       ! Fill in Lifting/Locking Ring

/COM************ SHIELD PLUG (offset y by 158.25) *************
LOCAL,20,0,,158.13
TYPE,2
PLUGR1=11.975
PLUGR2=11.45
PLUGR3=11.25
PLUGR4=7.89
```

```
/COM **** NODES AT PLUG AXIS (r=0) ****
N,601
N,602,0,-1
N,603,0,-1.994
N,606,0,-4.994
FILL,603,606,2,604
N,607,0,-6.25
N,610,0,-8.25
FILL,607,610,2,608
N,611,0,-8.75
N,613,0,-10.5
FILL,611,613

/COM **** NODAL GENERATION ****
NGEN,2,20,601,613,1,0.8825
NGEN,2,20,621,633,1,0.8825          ! Id Large Opening
NGEN,2,20,642,653,1,0.6875
NGEN,2,20,662,673,1,0.6875          ! Id Medium Opening
NGEN,2,20,683,693,1,0.4235          ! Id Small Opening
NGEN,2,10,706,713,1,0.9515          ! Center of Opening

N,730,5.4665,-1.994                 ! Od Small Opening
N,736,5.4665,-4.994
FILL,730,736,5,731
N,737,5.4665,-6.25
N,740,5.4665,-8.25
FILL,737,740,2,738
N,741,5.4665,-8.75
N,743,5.4665,-10.5
FILL,741,743
N,748,5.89,-1.0
NGEN,2,20,730,743,1,0.4235
FILL,748,750
N,766,7.265,0
NGEN,2,20,748,763,1,1.375
FILL,766,768
NGEN,3,20,766,768,1,0.3125
N,789,7.5775,-1.56
N,796,7.5775,-5.56
FILL,789,796,6
NGEN,2,20,789,796,1,0.3125
NGEN,3,20,777,783,1,0.3125

/COM **** UNDER LOCKING RING ****
N,824,8.5017,-6.25
N,827,8.5017,-8.25
FILL
N,828,8.5017,-8.75
N,830,8.5017,-10.5
FILL
NGEN,3,7,824,830,1,0.5616
NGEN,2,7,838,844,1,0.625
NGEN,2,7,845,851,1,0.6875      ! Under Bolt
N,859,11.625,-6.25
N,860,11.625,-6.917
```

```
N,861,11.625,-7.584
N,862,PLUGR2,-8.25
N,863,PLUGR2,-8.75
N,865,PLUGR3,-10.5
FILL,863,865,1
N,866,PLUGR1-0.288,-6.25
N,869,PLUGR1-0.288,-8.25
FILL,866,869,2
N,870,PLUGR1-0.288,-8.476
NGEN,2,5,866,870,1,0.288

/COM **** REFINING LIFTING EAR ****
CSYS,0
N,877,9.53,158.13
N,889,9.53,157.63
N,901,9.53,157.13
FILL,403,404,1,876
FILL,413,414,1,888
FILL,423,424,1,900
FILL,877,405,1,878
FILL,405,406,2,879,1
FILL,889,415,1,890
FILL,415,416,2,891,1
FILL,404,414,1,881
FILL,877,889,1,882
FILL,878,890,1,883
FILL,405,415,1,884
FILL,879,891,1,885
FILL,880,892,1,886
FILL,406,416,1,887
FILL,889,901,1,894
FILL,414,424,1,893
FILL,901,425,1,902
FILL,890,902,1,895
FILL,415,425,1,896
FILL,425,426,2,903,1
FILL,891,903,1,897
FILL,892,904,1,898
FILL,416,426,1,899
FILL,424,434,1,907
FILL,433,434,1,908
FILL,423,433,1,905
FILL,905,907

/COM **** COUPLING NODES ****
/COM **** BETWEEN LIFTING/LOCKING RING & SHELL ****
CP,1,UY,508,277          ! Start Threads
CP,2,UY,498,280
CP,3,UY,488,283
CP,4,UY,478,286
CP,5,UY,468,289
CP,6,UY,458,292

/COM **** BETWEEN BOLT & LOCKING RING ****
CP,7,UY,445,910
CP,8,UX,445,910
```

```
CP,9,UY,447,911
CP,10,UX,447,911
*DO,I,1,7
CP,10+I,UY,445+10*I,910+2*I
*ENDDO
*DO,I,1,7
CP,17+I,UY,447+10*I,911+2*I
*ENDDO
*DO,I,1,7
CP,24+I,UX,445+10*I,910+2*I
*ENDDO
*DO,I,1,7
CP,31+I,UX,447+10*I,911+2*I
*ENDDO
NALL
EALL

/COM **** ELEMENT GENERATION FOR SHELL ****
TYPE,1
MAT,1

/COM **** BOTTOM OF SHELL ****
E,1,2,22,21
E,2,3,23,22
EGEN,8,1,-1
E,10,11,30
E,21,22,42,41
E,22,23,43,42
EGEN,10,1,-1
E,11,31,30
E,11,32,31

/COM **** SHELL ****
E,50,51,54,53
EGEN,2,1,-1
EGEN,5,3,-2

/COM **** FIRST TRANSITION ELEMENTS ****
E,65,66,100
E,100,66,101
E,67,101,66

/COM **** SINGLE SHELL ****
E,100,101,103,102
EGEN,40,2,-1

/COM **** SECOND TRANSITION ELEMENTS ****
E,190,180,191
E,180,181,191
E,181,192,191

/COM **** TOP SHELL (DOUBLE ELEMENT) ****
E,190,191,194,193
EGEN,2,1,-1
EGEN,18,3,-2
E,244,245,986,985
```

```
EGEN,2,1,-1
E,256,257,988,987
E,257,258,989,988
E,985,986,981,980
EGEN,4,1,-1
E,980,981,248,247
EGEN,2,1,-1
E,982,983,260,249
E,983,984,261,260

/COM **** COLLAR TRANSITION & THREADED REGIONS ****
E,237,991,251,240
E,991,990,251
E,240,251,254,253
E,251,990,255,254
E,253,254,257,256
EGEN,2,1,-1
E,259,260,263,262
EGEN,2,1,-1
EGEN,12,3,-2
E,271,274,1000

/COM **** MERGE COINCIDENT NODES FOR SHELL ****
ESEL,S,TYPE,,1
NSLE
NUMMRG,NODE,
EALL
NALL
/COM **** END OF SHELL/COLLAR ELEMENT GENERATION ****

/COM **** LOCKING/LIFTING RING ELEMENTS ****
TYPE,3
MAT,1
E,411,412,402,401
EGEN,2,1,-1
EGEN,2,10,-2
E,413,888,876,403
E,881,404,876
E,888,881,876
E,888,414,881
E,881,882,877,404
E,414,889,882,881
E,882,883,878,877
E,889,890,883,882
E,883,884,405,878
E,890,415,884,883
E,884,885,879,405
E,415,891,885,884
E,885,886,880,879
E,891,892,886,885
E,886,887,406,880
E,892,416,887,886
E,423,900,888,413
E,893,414,888
E,900,893,888
E,900,424,893
```

```
E,893,894,889,414
E,424,901,894,893
E,894,895,890,889
E,901,902,895,894
E,895,896,415,890
E,902,425,896,895
E,896,897,891,415
E,425,903,897,896
E,897,898,892,891
E,903,904,898,897
E,898,899,416,892
E,904,426,899,898
E,431,432,422,421
E,905,423,422
E,432,905,422
E,432,433,905
E,905,906,900,423
E,433,908,906,905
E,906,907,424,900
E,908,434,907,906
E,441,442,432,431
EGEN,2,1,-1
E,443,908,433
E,443,444,434,908
E,451,452,442,441
EGEN,3,1,-1
EGEN,7,10,-3
E,454,912,910,444
E,464,914,912,454
E,474,916,914,464
E,484,918,916,474
E,494,920,918,484
E,504,922,920,494
E,514,924,922,504
E,458,448,911,913
E,468,458,913,915
E,478,468,915,917
E,488,478,917,919
E,498,488,919,921
E,508,498,921,923
E,518,508,923,925

/COM **** BOLT ****
TYPE,5
MAT,5
E,455,456,446,445
EGEN,8,10,-1
E,456,457,447,446
EGEN,8,10,-1
/COM********** END OF LOCKING/LIFTING RING **********

/COM **** SHIELD PLUG ELEMENTS ****
TYPE,2
MAT,1
E,602,622,621,601
EGEN,12,1,-1
```

```
EGEN,2,20,-12
EGEN,3,20,-11
EGEN,2,20,-10
E,707,717,716,706
EGEN,7,1,-1
E,717,737,736,716
EGEN,7,1,-1
E,731,751,750,730
EGEN,13,1,-1
E,749,769,768,748
EGEN,15,1,-1
E,767,787,786,766
EGEN,17,1,-1
EGEN,2,20,-17
E,818,825,824,817
EGEN,6,1,-1
EGEN,5,7,-6
E,853,860,859,852
EGEN,6,1,-1
E,860,867,866,859
EGEN,3,1,-1
E,867,872,871,866
EGEN,4,1,-1
/COM********** END OF SHIELD PLUG **********

/COM********** CONTACT ELEMENTS **********
/COM **** BETWEEN LOCKING RING & SHIELD PLUG ****
TYPE,4
REAL,4
E,806,401
E,807,411
E,808,421
E,809,431
E,810,441
E,811,451
E,812,461
E,813,471
E,814,481
E,815,491
E,816,501
E,817,511

/COM **** BETWEEN SHIELD PLUG & BOTTOM OF BOLT
REAL,5
E,845,525
E,852,526
E,859,527

/COM **** BETWEEN SHIELD PLUG & SHELL (ABOVE SEAL)
REAL,4
E,871,271
E,872,268
E,873,265
E,874,262

/COM **** BETWEEN SHIELD PLUG & SHELL (BELOW SEAL)
```

```
E,863,980

/COM **** BETWEEN SHIELD PLUG AND SEAL LIP
TYPE,4
REAL,6
E,247,862
E,248,870
E,249,875
/COM************ END GAP ELEMENTS ************

/COM************ BOUNDARY CONDITIONS AT AXIS (X=0) ************
CSYS,0
NSEL,S,LOC,X,0
D,ALL,UX,0
NALL
EALL
NSEL,S,NODE,,10
D,ALL,UY,O
NALL
EALL
SAVE
FINISH

!*****************************************************************
/COM***************        SOLUTION PHASE        **************
/SOLUTION

/COM **** LOAD 1: APPLYING 189 PSI INTERNAL PRESSURE ****
NALL
EALL
NSEL,S,LOC,X,0,1.26          ! Bottom Plate
NSEL,R,LOC,Y,-0.45,-0.43
SF,ALL,PRES,189
NALL
EALL
NSEL,S,LOC,X,1.24,2.14
NSEL,R,LOC,Y,-0.45,0.45
SF,ALL,PRES,189
NALL
EALL
NSEL,S,LOC,X,2.12,11.51
NSEL,R,LOC,Y,0.43,0.45
SF,ALL,PRES,189
NALL
EALL
NSEL,S,LOC,X,11.49,11.51     ! Inside Shell
NSEL,R,LOC,Y,0.43,149.64
SF,ALL,PRES,189
NALL
EALL
NSEL,S,LOC,X,11.49,11.76     ! Edge Shell to Seal
NSEL,R,LOC,Y,149.62,149.64
SF,ALL,PRES,189
NALL
EALL
NSEL,S,LOC,X,11.67,11.69     ! Seal
```

```
NSEL,R,LOC,Y,149.64,149.89
SF,ALL,PRES,189
NALL
EALL
NSEL,S,LOC,X,11.44,11.69    ! Shield Plug (above seal)
NSEL,R,LOC,Y,149.87,149.89
SF,ALL,PRES,189
NALL
EALL
NSEL,S,LOC,X,11.44,11.46    ! Side of Shield Plug
NSEL,R,LOC,Y,149.37,149.89
SF,ALL,PRES,189
NALL
EALL
NSEL,S,LOC,X,11.24,11.46    ! Shield Plug Taper
NSEL,R,LOC,Y,147.62,149.39
SF,ALL,PRES,189
NALL
EALL
NSEL,S,LOC,X,0,11.26        ! Bottom of Shield Plug
NSEL,R,LOC,Y,147.62,147.64
SF,ALL,PRES,189
NALL
EALL
SOLVE
SAVE
FINISH

/COM **** POSTPROCESSING ****
/POST1
SET,LAST
/TYPE,ALL,HIDC
/GLINE,ALL,0
RSYS,0
PLNSOL,S,INT
/DSCALE,,20
/REPLOT
LPATH,1,41                  ! Bottom Plate
PRSECT
LPATH,6,46
PRSECT
LPATH,10,50
PRSECT
LPATH,50,52                 ! Lower Shell
PRSECT
LPATH,53,55
PRSECT
LPATH,62,64
PRSECT
LPATH,65,67
PRSECT
LPATH,100,101               ! Mid Shell
PRSECT
LPATH,122,123
PRSECT
LPATH,134,135
```

```
PRSECT
LPATH,156,157
PRSECT
LPATH,170,171
PRSECT
LPATH,180,181
PRSECT
LPATH,202,204          ! Upper Shell
PRSECT
LPATH,235,237
PRSECT
LPATH,985,989
PRSECT
LPATH,262,264
PRSECT
LPATH,277,279
PRSECT
LPATH,292,294
PRSECT
LPATH,601,641          ! Shield Plug
PRSECT
LPATH,601,613
PRSECT
LPATH,603,703
PRSECT
LPATH,606,706
PRSECT
LPATH,766,806
PRSECT
LPATH,748,808
PRSECT
LPATH,730,810
PRSECT
LPATH,736,815
PRSECT
LPATH,869,874
PRSECT
LPATH,870,875
PRSECT
LPATH,431,434          ! Locking Ring
PRSECT
LPATH,406,426
PRSECT
LPATH,404,424
PRSECT
SAVE
```

COMPUTER RUN COVER SHEET

Project Number:	KH-8009-8
Computer Code:	ANSYS®-PC
Software Version:	5.0A
Computer System:	MS-DOS, Pentium® Processor
Computer Run File Number:	KH-8009-8-09
Unique Computer Run Filename:	MCO375.out
Run Description:	Load Case 3 Output
Run Date / Time:	27 March 1997 2:22:12 PM

Prepared By: Zachary G. Sargent Date 4/17/97

Checked By: Joe Nichols Date 4/17/97

COMPUTER RUN COVER SHEET

Project Number:	KH-8009-8
Computer Code:	ANSYS®-PC
Software Version:	5.0A
Computer System:	MS-DOS, Pentium® Processor
Computer Run File Number:	KH-8009-8-09
Unique Computer Run Filename:	POC4.inp
Run Description:	Load Case 4: 189 psi, 132°C
Creation Date / Time:	15 April 1997 5:17:54 PM

Prepared By: Zachary G. Sargent — Date: 4/18/97

Checked By: Joe Nichols — Date: 4/17/97

LISTING OF POC4.INP FILE

```
/BATCH,LIST
/FILENAM,POC4
/PREP7
/TITLE,MCO DESIGN- 132 DEGREES C, 189 PSI PRESSURE, LIFT, PRELOAD

TREF,70
TUNIF,270

/COM **** ELEMENT TYPES ****
ET,1,42,,,1              ! Shell
ET,2,42,,,1              ! Shield Plug
ET,3,42,,,1              ! Lifting & Locking Ring
ET,4,12                  ! Gap Elements Between Shield Plug & Shell
KEYOPT,4,7,1
ET,5,42,,,1              ! Bolt

/COM **** REAL CONSTANTS FOR GAP ELEMENTS ****
R,4,-90,1.0e8,-0.06,3.0      ! Shell/Shield Plug, Initially Open .06"
R,5,0,1.0e8,2.95e-03         ! L. Ring/Shield Plug, Under Bolt, Preloaded
R,6,0,1.0E8,0,2.0            ! Sealing Surface, closed

/COM ************ MATERIAL PROPERTIES **************
MP,DENS,1,490/1728           ! 304L SS
MP,NUXY,1,0.3

MP,DENS,5,490/1728           ! SA193 Grade B8M
MP,NUXY,5,0.3

/COM **** DEFINING TEMPERATURES FOR MPDATA ****
MPTEMP,1, 70,100,200,300,400,500
MPTEMP,7,600,650,700,750

/COM **** DEFINING ELASTIC MODULI FOR 304L & SA-193 ****
MPDATA,EX,1,1,28.3e+06,28.1e+06,27.6e+06,27.0e+06,26.5e+06,25.8e+06
MPDATA,EX,1,7,25.3e+06,25.1e+06,24.8e+06,24.5e+06
/COM                         ! SA-193
MPDATA,EX,5,1,28.3e+06,28.1e+06,27.6e+06,27.0e+06,26.5e+06,25.8e+06
MPDATA,EX,5,7,25.3e+06,25.1e+06,24.8e+06,24.5e+06

/COM **** MEAN COEFFICIENTS OF THERMAL EXPANSION (in./in./(F) ****
! SA240 Gr 304L
MPDATA,ALPX,1,1,0,8.55e-06,8.79e-06,9.00e-06,9.19e-06,9.37e-06
MPDATA,ALPX,1,7,9.53e-06,9.61e-06,9.69e-06,9.76e-06

! SA193 Gr B8M
MPDATA,ALPX,5,1,0,8.54e-06,8.76e-06,8.97e-06,9.21e-06,9.42e-06
MPDATA,ALPX,5,7,9.60e-06,9.69e-06,9.76e-06,9.81e-06


/COM************ SHELL GEOMETRY ***************
IR=11.5                  ! Internal Shell Radius @ Bottom
OR=12.000                ! Shell Outside Radius @ Bottom
IR2 = 12.02              ! Inside Radius at Collar Sealing Surface
```

```
OR2 = 12.625              ! Outside Radius at Collar Sealing Surface
IR3 = 12.25               ! Inside Radius at Collar-Lifting Ring Weld

/COM **** BOTTOM COVER PLATE  [DWG SK-2-300378] ****
N,1,,-1.32                ! Row 1
N,2,1.25,-1.32
N,3,2.13,-1.32
N,10,11.423,-1.32
FILL

N,41,0.00,-0.44           ! Row 3
N,42,1.25,-0.44
N,43,2.13,0.44
N,50,IR,0.44
FILL,43,50
N,52,OR,0.44
FILL,50,52

FILL,1,41,1,21,1,10       ! Middle Row
FILL,10,50,1,30
N,32,12,-0.32
FILL,30,32
FILL,10,32,1,11
N,53,IR,1.17
N,55,OR,1.17              ! Shell Stub/Weld
FILL,53,55

/COM **** SHELL [DWGS SK-2-300379 & SK-2-300461] ****
N,65,IR,6.68
N,67,OR,6.68
FILL
FILL,53,65,3,,3,3,1

/COM **** SINGLE ROW SHELL ****
N,100,IR,7.18             ! Inside
N,140,IR,71.68
N,180,IR,136.68

N,101,OR,7.18             ! Outside
N,141,OR,71.68
N,181,OR,136.68
FILL,100,140,20,,2,2,1,2.0
FILL,140,180,19,,2,2,1,.5

/COM **** DOUBLE ROW SHELL ****
N,190,IR,137.18           ! Transition to Double Row
N,192,OR,137.18
FILL

/COM **** BASE OF CASK THROAT--ELEVATION: 138 INCHES ****
N,217,IR,142.68           ! Transition to Double Row
N,219,OR,142.68
FILL
FILL,190,217,8,,3,3,1     ! Vertical Fill

/COM **** BOTTOM OF COLLAR TRANSITION ****
```

```
N,235,IR,146.06              ! Start of Transition to Large O.D &
N,237,OR,146.06              ! Assumed Location of Shield Plug Taper
FILL
N,238,IR,146.68
N,240,OR,146.68
FILL                 ! Horizontal Fill
FILL,217,235,5,,3,3,1        ! Vertical Fill

/COM **** TOP OF COLLAR TRANSITION ****
N,241,IR,147.31              ! End of Transition to Large O.D &
N,243,OR,147.31              ! Assumed Location of Shield Plug Taper
FILL                 ! Horizontal Fill
NGEN,2,3,241,243,1,,0.75

/COM **** COLLAR SEALING SURFACE ****
N,247,IR,149.63              ! Inside Radius of Sealing Surface
N,249,IR2,149.63             ! Outside Radius at Sealing Surface
FILL                 ! Horizontal Fill

/COM **** THICK WALL AT COLLAR TRANSITION ****
NGEN,2,10,240,249,3          ! Nodes 250-259 Coincident w/240-249 (by 3)
N,255,OR2,147.31             ! Outside Surface
N,261,OR2,149.63             ! Outside Surface
N,258,OR2,148.06
N,980,IR,149.38
N,981,11.755,149.38
N,982,IR2,149.38
N,983,12.317,149.38
N,984,OR2,149.38
N,990,OR2,146.68
FILL,240,990,1,251
NGEN,2,5,980,984,1,,-0.66
FILL,246,258,1,257
FILL,253,255,1,,1,3,3
FILL,237,990,1,991

/COM **** COLLAR AT BOTTOM EDGE OF PLUG (.155" above Sealing Surface) ****
NGEN,2,3,259,,,,0.245        ! Nodes 262

/COM **** COLLAR AT TOP EDGE OF PLUG (2" above bottom Edge) ****
NGEN,2,9,262,,,,2.00         ! Nodes 271
FILL,262,271,2

/COM **** COLLAR AT BASE OF THREADS ****
N,274,IR3,152.00
N,1000,IR2,152.00

/COM **** TOP TO COLLAR (WELD CLOSURE) ****
N,295,IR3,156.00
FILL,274,295
NGEN,3,1,259,295,3,(OR2-IR2)/2
NGEN,3,1,274,295,3,(OR2-IR3)/2

/COM********** LOCKING & LIFTING RING GEOMETRY **********
RING1=7.94
RING2=9.375
```

```
RING3=9.625
RING4=10.19
RING5=12.23
LOCAL,11,0,,152.00          ! Local System z=0 at Base of Ring
CSYS,11

/COM **** TOP EDGE ****
N,401,RING1,6.13
CSYS,O
N,404,9.375,158.13
FILL,401,404,,,1
N,406,RING4,158.13
FILL,404,406,,,1            ! Top Edge

/COM **** LIFTING SURFACE ****
CSYS,11
N,421,RING1,5.13
N,424,RING2,5.13
FILL,421,424
N,426,RING4,5.13
FILL,424,426
FILL,401,421,1,,10,6,1
N,431,RING1,6.13-1.56
N,434,RING2,6.13-1.56
FILL

/COM **** BOLTING SURFACE ****
N,441,RING1,4
N,444,RING3,4
FILL
N,445,10.9375-.6875,4        ! Inside Edge of Bolt Hole
N,447,10.9375+.6875,4        ! Outside Edge of Bolt Hole
FILL
N,910,10.9375-.6875,4
N,911,10.9375+.6875,4
N,448,RING5,4                ! O.D of Ring
CSYS,0                       ! Bolt Extension
N,924,10.25,152.00           ! Double Nodes @ Bolt for Gap elements
N,925,11.625,152.00
FILL,910,924,6,,2
FILL,911,925,6,,2
N,525,10.25,151.874          ! Bottom of Bolt Extension
N,527,11.625,151.874
FILL

/COM **** BOTTOM OF LIFTING/LOCKING RING ****
CSYS,11
NGEN,2,70,441,448,1,,-4      ! Bottom Surface of Lifting/Locking Ring
FILL,441,511,6,,10,8,1       ! Fill in Lifting/Locking Ring

/COM********** SHIELD PLUG (offset y by 158.25) **********
LOCAL,20,0,,158.13
TYPE,2
PLUGR1=11.975
PLUGR2=11.45
PLUGR3=11.25
```

```
PLUGR4=7.89

/COM **** NODES AT PLUG AXIS (r=0) ****
N,601
N,602,0,-1
N,603,0,-1.994
N,606,0,-4.994
FILL,603,606,2,604
N,607,0,-6.25
N,610,0,-8.25
FILL,607,610,2,608
N,611,0,-8.75
N,613,0,-10.5
FILL,611,613

/COM **** NODAL GENERATION ****
NGEN,2,20,601,613,1,0.8825
NGEN,2,20,621,633,1,0.8825          ! Id Large Opening
NGEN,2,20,642,653,1,0.6875
NGEN,2,20,662,673,1,0.6875          ! Id Medium Opening
NGEN,2,20,683,693,1,0.4235          ! Id Small Opening
NGEN,2,10,706,713,1,0.9515          ! Center of Opening

N,730,5.4665,-1.994                 ! Od Small Opening
N,736,5.4665,-4.994
FILL,730,736,5,731
N,737,5.4665,-6.25
N,740,5.4665,-8.25
FILL,737,740,2,738
N,741,5.4665,-8.75
N,743,5.4665,-10.5
FILL,741,743
N,748,5.89,-1.0
NGEN,2,20,730,743,1,0.4235
FILL,748,750
N,766,7.265,0
NGEN,2,20,748,763,1,1.375
FILL,766,768
NGEN,3,20,766,768,1,0.3125
N,789,7.5775,-1.56
N,796,7.5775,-5.56
FILL,789,796,6
NGEN,2,20,789,796,1,0.3125
NGEN,3,20,777,783,1,0.3125

/COM **** UNDER LOCKING RING ****
N,824,8.5017,-6.25
N,827,8.5017,-8.25
FILL
N,828,8.5017,-8.75
N,830,8.5017,-10.5
FILL
NGEN,3,7,824,830,1,0.5616
NGEN,2,7,838,844,1,0.625
NGEN,2,7,845,851,1,0.6875     ! Under Bolt
N,859,11.625,-6.25
```

```
N,860,11.625,-6.917
N,861,11.625,-7.584
N,862,PLUGR2,-8.25
N,863,PLUGR2,-8.75
N,865,PLUGR3,-10.5
FILL,863,865,1
N,866,PLUGR1-0.288,-6.25
N,869,PLUGR1-0.288,-8.25
FILL,866,869,2
N,870,PLUGR1-0.288,-8.476
NGEN,2,5,866,870,1,0.288

/COM **** REFINING LIFTING EAR ****
CSYS,0
N,877,9.53,158.13
N,889,9.53,157.63
N,901,9.53,157.13
FILL,403,404,1,876
FILL,413,414,1,888
FILL,423,424,1,900
FILL,877,405,1,878
FILL,405,406,2,879,1
FILL,889,415,1,890
FILL,415,416,2,891,1
FILL,404,414,1,881
FILL,877,889,1,882
FILL,878,890,1,883
FILL,405,415,1,884
FILL,879,891,1,885
FILL,880,892,1,886
FILL,406,416,1,887
FILL,889,901,1,894
FILL,414,424,1,893
FILL,901,425,1,902
FILL,890,902,1,895
FILL,415,425,1,896
FILL,425,426,2,903,1
FILL,891,903,1,897
FILL,892,904,1,898
FILL,416,426,1,899
FILL,424,434,1,907
FILL,433,434,1,908
FILL,423,433,1,905
FILL,905,907

/COM **** COUPLING NODES ****
/COM **** BETWEEN LIFTING/LOCKING RING & SHELL ****
CP,1,UY,508,277          ! Start Threads
CP,2,UY,498,280
CP,3,UY,488,283
CP,4,UY,478,286
CP,5,UY,468,289
CP,6,UY,458,292

/COM **** BETWEEN BOLT & LOCKING RING ****
CP,7,UY,445,910
```

```
CP,8,UX,445,910
CP,9,UY,447,911
CP,10,UX,447,911
*DO,I,1,7
CP,10+I,UY,445+10*I,910+2*I
*ENDDO
*DO,I,1,7
CP,17+I,UY,447+10*I,911+2*I
*ENDDO
*DO,I,1,7
CP,24+I,UX,445+10*I,910+2*I
*ENDDO
*DO,I,1,7
CP,31+I,UX,447+10*I,911+2*I
*ENDDO
NALL
EALL

/COM **** ELEMENT GENERATION FOR SHELL ****
TYPE,1
MAT,1

/COM **** BOTTOM OF SHELL ****
E,1,2,22,21
E,2,3,23,22
EGEN,8,1,-1
E,10,11,30
E,21,22,42,41
E,22,23,43,42
EGEN,10,1,-1
E,11,31,30
E,11,32,31

/COM **** SHELL ****
E,50,51,54,53
EGEN,2,1,-1
EGEN,5,3,-2

/COM **** FIRST TRANSITION ELEMENTS ****
E,65,66,100
E,100,66,101
E,67,101,66

/COM **** SINGLE SHELL ****
E,100,101,103,102
EGEN,40,2,-1

/COM **** SECOND TRANSITION ELEMENTS ****
E,190,180,191
E,180,181,191
E,181,192,191

/COM **** TOP SHELL (DOUBLE ELEMENT) ****
E,190,191,194,193
EGEN,2,1,-1
EGEN,18,3,-2
```

```
E,244,245,986,985
EGEN,2,1,-1
E,256,257,988,987
E,257,258,989,988
E,985,986,981,980
EGEN,4,1,-1
E,980,981,248,247
EGEN,2,1,-1
E,982,983,260,249
E,983,984,261,260

/COM **** COLLAR TRANSITION & THREADED REGIONS ****
E,237,991,251,240
E,991,990,251
E,240,251,254,253
E,251,990,255,254
E,253,254,257,256
EGEN,2,1,-1
E,259,260,263,262
EGEN,2,1,-1
EGEN,12,3,-2
E,271,274,1000

/COM **** MERGE COINCIDENT NODES FOR SHELL ****
ESEL,S,TYPE,,1
NSLE
NUMMRG,NODE,
EALL
NALL
/COM **** END OF SHELL/COLLAR ELEMENT GENERATION ****

/COM **** LOCKING/LIFTING RING ELEMENTS ****
TYPE,3
MAT,1
E,411,412,402,401
EGEN,2,1,-1
EGEN,2,10,-2
E,413,888,876,403
E,881,404,876
E,888,881,876
E,888,414,881
E,881,882,877,404
E,414,889,882,881
E,882,883,878,877
E,889,890,883,882
E,883,884,405,878
E,890,415,884,883
E,884,885,879,405
E,415,891,885,884
E,885,886,880,879
E,891,892,886,885
E,886,887,406,880
E,892,416,887,886
E,423,900,888,413
E,893,414,888
E,900,893,888
```

```
E,900,424,893
E,893,894,889,414
E,424,901,894,893
E,894,895,890,889
E,901,902,895,894
E,895,896,415,890
E,902,425,896,895
E,896,897,891,415
E,425,903,897,896
E,897,898,892,891
E,903,904,898,897
E,898,899,416,892
E,904,426,899,898
E,431,432,422,421
E,905,423,422
E,432,905,422
E,432,433,905
E,905,906,900,423
E,433,908,906,905
E,906,907,424,900
E,908,434,907,906
E,441,442,432,431
EGEN,2,1,-1
E,443,908,433
E,443,444,434,908
E,451,452,442,441
EGEN,3,1,-1
EGEN,7,10,-3
E,454,912,910,444
E,464,914,912,454
E,474,916,914,464
E,484,918,916,474
E,494,920,918,484
E,504,922,920,494
E,514,924,922,504
E,458,448,911,913
E,468,458,913,915
E,478,468,915,917
E,488,478,917,919
E,498,488,919,921
E,508,498,921,923
E,518,508,923,925

/COM **** BOLT ****
TYPE,5
MAT,5
E,455,456,446,445
EGEN,8,10,-1
E,456,457,447,446
EGEN,8,10,-1
/COM********** END OF LOCKING/LIFTING RING **********

/COM **** SHIELD PLUG ELEMENTS ****
TYPE,2
MAT,1
E,602,622,621,601
```

```
EGEN,12,1,-1
EGEN,2,20,-12
EGEN,3,20,-11
EGEN,2,20,-10
E,707,717,716,706
EGEN,7,1,-1
E,717,737,736,716
EGEN,7,1,-1
E,731,751,750,730
EGEN,13,1,-1
E,749,769,768,748
EGEN,15,1,-1
E,767,787,786,766
EGEN,17,1,-1
EGEN,2,20,-17
E,818,825,824,817
EGEN,6,1,-1
EGEN,5,7,-6
E,853,860,859,852
EGEN,6,1,-1
E,860,867,866,859
EGEN,3,1,-1
E,867,872,871,866
EGEN,4,1,-1
/COM********** END OF SHIELD PLUG **********

/COM********** CONTACT ELEMENTS **********
/COM **** BETWEEN LOCKING RING & SHIELD PLUG ****
TYPE,4
REAL,4
E,806,401
E,807,411
E,808,421
E,809,431
E,810,441
E,811,451
E,812,461
E,813,471
E,814,481
E,815,491
E,816,501
E,817,511

/COM **** BETWEEN SHIELD PLUG & BOTTOM OF BOLT
REAL,5
E,845,525
E,852,526
E,859,527

/COM **** BETWEEN SHIELD PLUG & SHELL (ABOVE SEAL)
REAL,4
E,871,271
E,872,268
E,873,265
E,874,262
```

```
/COM **** BETWEEN SHIELD PLUG & SHELL (BELOW SEAL)
E,863,980

/COM **** BETWEEN SHIELD PLUG AND SEAL LIP
TYPE,4
REAL,6
E,247,862
E,248,870
E,249,875
/COM************ END GAP ELEMENTS ************

/COM************ BOUNDARY CONDITIONS AT AXIS (X=0) ************
CSYS,0
NSEL,S,LOC,X,0
D,ALL,UX,0
NALL
EALL
NSEL,S,NODE,,10
D,ALL,UY,O
NALL
EALL
SAVE
FINISH

/COM***************        SOLUTION PHASE        **************
/SOLUTION

/COM **** LOAD 1: APPLYING 150 PSI INTERNAL PRESSURE ****
NALL
EALL
NSEL,S,LOC,X,0,1.26          ! Bottom Plate
NSEL,R,LOC,Y,-0.45,-0.43
SF,ALL,PRES,189
NALL
EALL
NSEL,S,LOC,X,1.24,2.14
NSEL,R,LOC,Y,-0.45,0.45
SF,ALL,PRES,189
NALL
EALL
NSEL,S,LOC,X,2.12,11.51
NSEL,R,LOC,Y,0.43,0.45
SF,ALL,PRES,189
NALL
EALL
NSEL,S,LOC,X,11.49,11.51     ! Inside Shell
NSEL,R,LOC,Y,0.43,149.64
SF,ALL,PRES,189
NALL
EALL
NSEL,S,LOC,X,11.49,11.76     ! Edge Shell to Seal
NSEL,R,LOC,Y,149.62,149.64
SF,ALL,PRES,189
NALL
EALL
NSEL,S,LOC,X,11.67,11.69     ! Seal
```

```
NSEL,R,LOC,Y,149.64,149.89
SF,ALL,PRES,189
NALL
EALL
NSEL,S,LOC,X,11.44,11.69     ! Shield Plug (above seal)
NSEL,R,LOC,Y,149.87,149.89
SF,ALL,PRES,189
NALL
EALL
NSEL,S,LOC,X,11.44,11.46     ! Side of Shield Plug
NSEL,R,LOC,Y,149.37,149.89
SF,ALL,PRES,189
NALL
EALL
NSEL,S,LOC,X,11.24,11.46     ! Shield Plug Taper
NSEL,R,LOC,Y,147.62,149.39
SF,ALL,PRES,189
NALL
EALL
NSEL,S,LOC,X,0,11.26         ! Bottom of Shield Plug
NSEL,R,LOC,Y,147.62,147.64
SF,ALL,PRES,189
NALL
EALL
LSWRITE,1

/COM **** LOAD 2: LIFTING LOAD ****
NSEL,ALL
NSEL,S,NODE,,901,904,1
NSEL,A,NODE,,425,426
SF,ALL,PRES,587.25           ! 24000#/40.87 IN^2 (SHOE WIDTH SMEARED AROUND
NALL                  ! CIRCUMFERENCE OF LIFTING EAR)
EALL
LSWRITE,2
LSSOLVE,1,2
SAVE
FINISH

/COM **** POSTPROCESSING ****
/POST1
SET,LAST
/TYPE,ALL,HIDC
/GLINE,ALL,0
RSYS,0
PLNSOL,S,INT
/DSCALE,,20
/REPLOT
LPATH,1,41                   ! Bottom Plate
PRSECT
LPATH,6,46
PRSECT
LPATH,10,50
PRSECT
LPATH,50,52                  ! Lower Shell
PRSECT
LPATH,50,55
```

```
PRSECT
LPATH,62,64
PRSECT
LPATH,65,67
PRSECT
LPATH,100,101          ! Mid Shell
PRSECT
LPATH,122,123
PRSECT
LPATH,134,135
PRSECT
LPATH,156,157
PRSECT
LPATH,170,171
PRSECT
LPATH,180,181
PRSECT
LPATH,202,204          ! Upper Shell
PRSECT
LPATH,235,237
PRSECT
LPATH,985,989
PRSECT
LPATH,262,264
PRSECT
LPATH,277,279
PRSECT
LPATH,292,294
PRSECT
LPATH,601,641          ! Shield Plug
PRSECT
LPATH,601,613
PRSECT
LPATH,603,703
PRSECT
LPATH,606,706
PRSECT
LPATH,766,806
PRSECT
LPATH,748,808
PRSECT
LPATH,730,810
PRSECT
LPATH,736,815
PRSECT
LPATH,869,874
PRSECT
LPATH,870,875
PRSECT
LPATH,431,434          ! Locking Ring
PRSECT
LPATH,406,426
PRSECT
LPATH,404,424
PRSECT
SAVE
```

COMPUTER RUN COVER SHEET

Project Number:	KH-8009-8
Computer Code:	ANSYS®-PC
Software Version:	5.0A
Computer System:	MS-DOS, Pentium® Processor
Computer Run File Number:	KH-8009-8-09
Unique Computer Run Filename:	POC4.out
Run Description:	Load Case 4 Output
Run Date / Time:	15 April 1997 5:19:56 PM

Prepared By: Zachary G. Sargent Date 4/18/97

Checked By: Joe Nichols Date 4/17/97

COMPUTER RUN COVER SHEET

Project Number:	KH-8009-8
Computer Code:	ANSYS®-PC
Software Version:	5.0A
Computer System:	MS-DOS, Pentium® Processor
Computer Run File Number:	KH-8009-8-09
Unique Computer Run Filename:	TG275.inp
Run Description:	Load Case 5: Differential Temperature
Creation Date / Time:	27 March 1997 1:00:32 PM

Prepared By: Zachary G. Sargent — Date: 4/18/97

Checked By: Joe Nichols — Date: 4/18/97

LISTING OF TG275.INP FILE

```
/BATCH,LIST
/FILENAM,TG275
/PREP7
/TITLE,MCO DESIGN- 100 C TEMPERATURE DIFFERENTIAL, 189 PSI

TREF,70              ! Reference Temperature of 70 F.

/COM **** ELEMENT TYPES ****
ET,1,55,,,1          ! Shell
ET,2,55,,,1          ! Shield Plug
ET,3,55,,,1          ! Lifting & Locking Ring
ET,4,32              ! Gap Elements Between Shield Plug & Shell
ET,5,55,,,1          ! Bolt


/COM **** REAL CONSTANTS FOR GAP ELEMENTS ****
R,4,1
R,5,0,1.0e8,2.95e-03      ! L. Ring/Shield Plug, Under Bolt, Preloaded
R,6,0,1.0e8,0,2.0         ! Sealing Surface, initially closed

/COM ************ MATERIAL PROPERTIES **************
MP,DENS,1,490/1728        ! SA240 Grade 304L
MP,NUXY,1,0.3

MP,DENS,5,490/1728        ! SA193 Grade B8M
MP,NUXY,5,0.3

/COM **** DEFINING TEMPERATURES FOR MPDATA ****
MPTEMP,1, 70,100,200,300,400,500
MPTEMP,7,600,650,700,750

/COM **** DEFINING ELASTIC MODULI ****
! SA240 Gr 304L
MPDATA,EX,1,1,28.3e+06,28.1e+06,27.6e+06,27.0e+06,26.5e+06,25.8e+06
MPDATA,EX,1,7,25.3e+06,25.1e+06,24.8e+06,24.5e+06

! SA193 Gr B8M
MPDATA,EX,5,1,28.3e+06,28.1e+06,27.6e+06,27.0e+06,26.5e+06,25.8e+06
MPDATA,EX,5,7,25.3e+06,25.1e+06,24.8e+06,24.5e+06

/COM **** MEAN COEFFICIENTS OF THERMAL EXPANSION (in./in./(F) ****
! SA240 Gr 304L
MPDATA,ALPX,1,1,0,8.55e-06,8.79e-06,9.00e-06,9.19e-06,9.37e-06
MPDATA,ALPX,1,7,9.53e-06,9.61e-06,9.69e-06,9.76e-06

! SA193 Gr B8M
MPDATA,ALPX,5,1,0,8.54e-06,8.76e-06,8.97e-06,9.21e-06,9.42e-06
MPDATA,ALPX,5,7,9.60e-06,9.69e-06,9.76e-06,9.81e-06

/COM **** THERMAL CONDUCTIVITY COEFFICIENTS (Btu/Hr-in.-(F)****
! SA240 Gr 304L
MPDATA,KXX,1,1,0.716,0.725,0.775,0.817,0.867,0.908
MPDATA,KXX,1,7,0.942,0.967,0.983,1.00
```

```
! SA193 Gr B8M
MPDATA,KXX,5,1,7.7,7.9,8.4,9.0,9.5,10.0
MPDATA,KXX,5,7,10.5,10.7,11.0,11.2

/COM************ SHELL GEOMETRY ***************
IR=11.5              ! Internal Shell Radius @ Bottom
OR=12.000            ! Shell Outside Radius @ Bottom
IR2 = 12.02          ! Inside Radius at Collar Sealing Surface
OR2 = 12.625         ! Outside Radius at Collar Sealing Surface
IR3 = 12.25          ! Inside Radius at Collar-Lifting Ring Weld

/COM **** BOTTOM COVER PLATE  [DWG SK-2-300378] ****
N,1,,-1.32           ! Row 1
N,2,1.25,-1.32
N,3,2.13,-1.32
N,10,11.423,-1.32
FILL

N,41,0.00,-0.44      ! Row 3
N,42,1.25,-0.44
N,43,2.13,0.44
N,50,IR,0.44
FILL,43,50
N,52,OR,0.44
FILL,50,52

FILL,1,41,1,21,1,10  ! Middle Row
FILL,10,50,1,30
N,32,12,-0.32
FILL,30,32
FILL,10,32,1,11
N,53,IR,1.17
N,55,OR,1.17         ! Shell Stub/Weld
FILL,53,55

/COM **** SHELL [DWGS SK-2-300379 & SK-2-300461] ****
N,65,IR,6.68
N,67,OR,6.68
FILL
FILL,53,65,3,,3,3,1

/COM **** SINGLE ROW SHELL ****
N,100,IR,7.18        ! Inside
N,140,IR,71.68
N,180,IR,136.68

N,101,OR,7.18        ! Outside
N,141,OR,71.68
N,181,OR,136.68
FILL,100,140,20,,2,2,1,2.0
FILL,140,180,19,,2,2,1,.5

/COM **** DOUBLE ROW SHELL ****
N,190,IR,137.18      ! Transition to Double Row
N,192,OR,137.18
```

```
FILL

/COM **** BASE OF CASK THROAT--ELEVATION: 138 INCHES ****
N,217,IR,142.68              ! Transition to Double Row
N,219,OR,142.68
FILL
FILL,190,217,8,,3,3,1        ! Vertical Fill

/COM **** BOTTOM OF COLLAR TRANSITION ****
N,235,IR,146.06              ! Start of Transition to Large O.D &
N,237,OR,146.06              ! Assumed Location of Shield Plug Taper
FILL
N,238,IR,146.68
N,240,OR,146.68
FILL                 ! Horizontal Fill
FILL,217,235,5,,3,3,1        ! Vertical Fill

/COM **** TOP OF COLLAR TRANSITION ****
N,241,IR,147.31              ! End of Transition to Large O.D &
N,243,OR,147.31              ! Assumed Location of Shield Plug Taper
FILL                 ! Horizontal Fill
NGEN,2,3,241,243,1,,0.75

/COM **** COLLAR SEALING SURFACE ****
N,247,IR,149.63              ! Inside Radius of Sealing Surface
N,249,IR2,149.63             ! Outside Radius at Sealing Surface
FILL                 ! Horizontal Fill

/COM **** THICK WALL AT COLLAR TRANSITION ****
NGEN,2,10,240,249,3          ! Nodes 250-259 Coincident w/240-249 (by 3)
N,255,OR2,147.31             ! Outside Surface
N,261,OR2,149.63             ! Outside Surface
N,258,OR2,148.06
N,980,IR,149.38
N,981,11.755,149.38
N,982,IR2,149.38
N,983,12.317,149.38
N,984,OR2,149.38
N,990,OR2,146.68
FILL,240,990,1,251
NGEN,2,5,980,984,1,,-0.66
FILL,246,258,1,257
FILL,253,255,1,,1,3,3
FILL,237,990,1,991

/COM **** COLLAR AT BOTTOM EDGE OF PLUG (.155" above Sealing Surface) ****
NGEN,2,3,259,,,,0.245        ! Nodes 262

/COM **** COLLAR AT TOP EDGE OF PLUG (2" above bottom Edge) ****
NGEN,2,9,262,,,,2.00         ! Nodes 271
FILL,262,271,2

/COM **** COLLAR AT BASE OF THREADS ****
N,274,IR3,152.00
N,1000,IR2,152.00
```

```
/COM **** TOP TO COLLAR (WELD CLOSURE) ****
N,295,IR3,156.00
FILL,274,295
NGEN,3,1,259,295,3,(OR2-IR2)/2
NGEN,3,1,274,295,3,(OR2-IR3)/2

/COM************ LOCKING & LIFTING RING GEOMETRY **************
RING1=7.94
RING2=9.375
RING3=9.625
RING4=10.19
RING5=12.23
LOCAL,11,0,,152.00          ! Local System z=0 at Base of Ring
CSYS,11

/COM **** TOP EDGE ****
N,401,RING1,6.13
CSYS,O
N,404,9.375,158.13
FILL,401,404,,,1
N,406,RING4,158.13
FILL,404,406,,,1            ! Top Edge

/COM **** LIFTING SURFACE ****
CSYS,11
N,421,RING1,5.13
N,424,RING2,5.13
FILL,421,424
N,426,RING4,5.13
FILL,424,426
FILL,401,421,1,,10,6,1
N,431,RING1,6.13-1.56
N,434,RING2,6.13-1.56
FILL

/COM **** BOLTING SURFACE ****
N,441,RING1,4
N,444,RING3,4
FILL
N,445,10.9375-.6875,4        ! Inside Edge of Bolt Hole
N,447,10.9375+.6875,4        ! Outside Edge of Bolt Hole
FILL
N,910,10.9375-.6875,4
N,911,10.9375+.6875,4
N,448,RING5,4              ! O.D of Ring
CSYS,0                  ! Bolt Extension
N,924,10.25,152.00          ! Double Nodes @ Bolt for Gap elements
N,925,11.625,152.00
FILL,910,924,6,,2
FILL,911,925,6,,2
N,525,10.25,151.874         ! Bottom of Bolt Extension
N,527,11.625,151.874
FILL

/COM **** BOTTOM OF LIFTING/LOCKING RING ****
CSYS,11
```

```
NGEN,2,70,441,448,1,,-4      ! Bottom Surface of Lifting/Locking Ring
FILL,441,511,6,,10,8,1       ! Fill in Lifting/Locking Ring

/COM********** SHIELD PLUG (offset y by 158.25) **********
LOCAL,20,0,,158.13
TYPE,2
PLUGR1=11.975
PLUGR2=11.45
PLUGR3=11.25
PLUGR4=7.89

/COM **** NODES AT PLUG AXIS (r=0) ****
N,601
N,602,0,-1
N,603,0,-1.994
N,606,0,-4.994
FILL,603,606,2,604
N,607,0,-6.25
N,610,0,-8.25
FILL,607,610,2,608
N,611,0,-8.75
N,613,0,-10.5
FILL,611,613

/COM **** NODAL GENERATION ****
NGEN,2,20,601,613,1,0.8825
NGEN,2,20,621,633,1,0.8825          ! Id Large Opening
NGEN,2,20,642,653,1,0.6875
NGEN,2,20,662,673,1,0.6875          ! Id Medium Opening
NGEN,2,20,683,693,1,0.4235          ! Id Small Opening
NGEN,2,10,706,713,1,0.9515          ! Center of Opening

N,730,5.4665,-1.994                 ! Od Small Opening
N,736,5.4665,-4.994
FILL,730,736,5,731
N,737,5.4665,-6.25
N,740,5.4665,-8.25
FILL,737,740,2,738
N,741,5.4665,-8.75
N,743,5.4665,-10.5
FILL,741,743
N,748,5.89,-1.0
NGEN,2,20,730,743,1,0.4235
FILL,748,750
N,766,7.265,0
NGEN,2,20,748,763,1,1.375
FILL,766,768
NGEN,3,20,766,768,1,0.3125
N,789,7.5775,-1.56
N,796,7.5775,-5.56
FILL,789,796,6
NGEN,2,20,789,796,1,0.3125
NGEN,3,20,777,783,1,0.3125

/COM **** UNDER LOCKING RING ****
N,824,8.5017,-6.25
```

```
N,827,8.5017,-8.25
FILL
N,828,8.5017,-8.75
N,830,8.5017,-10.5
FILL
NGEN,3,7,824,830,1,0.5616
NGEN,2,7,838,844,1,0.625
NGEN,2,7,845,851,1,0.6875     ! Under Bolt
N,859,11.625,-6.25
N,860,11.625,-6.917
N,861,11.625,-7.584
N,862,PLUGR2,-8.25
N,863,PLUGR2,-8.75
N,865,PLUGR3,-10.5
FILL,863,865,1
N,866,PLUGR1-0.288,-6.25
N,869,PLUGR1-0.288,-8.25
FILL,866,869,2
N,870,PLUGR1-0.288,-8.476
NGEN,2,5,866,870,1,0.288

/COM **** REFINING LIFTING EAR ****
CSYS,0
N,877,9.53,158.13
N,889,9.53,157.63
N,901,9.53,157.13
FILL,403,404,1,876
FILL,413,414,1,888
FILL,423,424,1,900
FILL,877,405,1,878
FILL,405,406,2,879,1
FILL,889,415,1,890
FILL,415,416,2,891,1
FILL,404,414,1,881
FILL,877,889,1,882
FILL,878,890,1,883
FILL,405,415,1,884
FILL,879,891,1,885
FILL,880,892,1,886
FILL,406,416,1,887
FILL,889,901,1,894
FILL,414,424,1,893
FILL,901,425,1,902
FILL,890,902,1,895
FILL,415,425,1,896
FILL,425,426,2,903,1
FILL,891,903,1,897
FILL,892,904,1,898
FILL,416,426,1,899
FILL,424,434,1,907
FILL,433,434,1,908
FILL,423,433,1,905
FILL,905,907

/COM **** COUPLING NODES ****
/COM **** BETWEEN LIFTING/LOCKING RING & SHELL ****
```

```
CP,1,TEMP,508,277          ! Start Threads
CP,2,TEMP,498,280
CP,3,TEMP,488,283
CP,4,TEMP,478,286
CP,5,TEMP,468,289
CP,6,TEMP,458,292

/COM **** BETWEEN BOLT & LOCKING RING ****
*DO,I,1,7
CP,8+I,TEMP,445+10*I,910+2*I
*ENDDO
*DO,I,1,7
CP,15+I,TEMP,447+10*I,911+2*I
*ENDDO
NALL
EALL

/COM **** ELEMENT GENERATION FOR SHELL ****
TYPE,1
MAT,1

/COM **** BOTTOM OF SHELL ****
E,1,2,22,21
E,2,3,23,22
EGEN,8,1,-1
E,10,11,30
E,21,22,42,41
E,22,23,43,42
EGEN,10,1,-1
E,11,31,30
E,11,32,31

/COM **** SHELL ****
E,50,51,54,53
EGEN,2,1,-1
EGEN,5,3,-2

/COM **** FIRST TRANSITION ELEMENTS ****
E,65,66,100
E,100,66,101
E,67,101,66

/COM **** SINGLE SHELL ****
E,100,101,103,102
EGEN,40,2,-1

/COM **** SECOND TRANSITION ELEMENTS ****
E,190,180,191
E,180,181,191
E,181,192,191

/COM **** TOP SHELL (DOUBLE ELEMENT) ****
E,190,191,194,193
EGEN,2,1,-1
EGEN,18,3,-2
E,244,245,986,985
```

```
EGEN,2,1,-1
E,256,257,988,987
E,257,258,989,988
E,985,986,981,980
EGEN,4,1,-1
E,980,981,248,247
EGEN,2,1,-1
E,982,983,260,249
E,983,984,261,260

/COM **** COLLAR TRANSITION & THREADED REGIONS ****
E,237,991,251,240
E,991,990,251
E,240,251,254,253
E,251,990,255,254
E,253,254,257,256
EGEN,2,1,-1
E,259,260,263,262
EGEN,2,1,-1
EGEN,12,3,-2
E,271,274,1000

/COM **** MERGE COINCIDENT NODES FOR SHELL ****
ESEL,S,TYPE,,1
NSLE
NUMMRG,NODE,
EALL
NALL
/COM **** END OF SHELL/COLLAR ELEMENT GENERATION ****

/COM **** LOCKING/LIFTING RING ELEMENTS ****
TYPE,3
MAT,1
E,411,412,402,401
EGEN,2,1,-1
EGEN,2,10,-2
E,413,888,876,403
E,881,404,876
E,888,881,876
E,888,414,881
E,881,882,877,404
E,414,889,882,881
E,882,883,878,877
E,889,890,883,882
E,883,884,405,878
E,890,415,884,883
E,884,885,879,405
E,415,891,885,884
E,885,886,880,879
E,891,892,886,885
E,886,887,406,880
E,892,416,887,886
E,423,900,888,413
E,893,414,888
E,900,893,888
E,900,424,893
```

```
E,893,894,889,414
E,424,901,894,893
E,894,895,890,889
E,901,902,895,894
E,895,896,415,890
E,902,425,896,895
E,896,897,891,415
E,425,903,897,896
E,897,898,892,891
E,903,904,898,897
E,898,899,416,892
E,904,426,899,898
E,431,432,422,421
E,905,423,422
E,432,905,422
E,432,433,905
E,905,906,900,423
E,433,908,906,905
E,906,907,424,900
E,908,434,907,906
E,441,442,432,431
EGEN,2,1,-1
E,443,908,433
E,443,444,434,908
E,451,452,442,441
EGEN,3,1,-1
EGEN,7,10,-3
E,454,912,910,444
E,464,914,912,454
E,474,916,914,464
E,484,918,916,474
E,494,920,918,484
E,504,922,920,494
E,514,924,922,504
E,458,448,911,913
E,468,458,913,915
E,478,468,915,917
E,488,478,917,919
E,498,488,919,921
E,508,498,921,923
E,518,508,923,925

/COM **** BOLT ****
TYPE,5
MAT,5
E,455,456,446,445
EGEN,8,10,-1
E,456,457,447,446
EGEN,8,10,-1
/COM********** END OF LOCKING/LIFTING RING **********

/COM **** SHIELD PLUG ELEMENTS ****
TYPE,2
MAT,1
E,602,622,621,601
EGEN,12,1,-1
```

```
EGEN,2,20,-12
EGEN,3,20,-11
EGEN,2,20,-10
E,707,717,716,706
EGEN,7,1,-1
E,717,737,736,716
EGEN,7,1,-1
E,731,751,750,730
EGEN,13,1,-1
E,749,769,768,748
EGEN,15,1,-1
E,767,787,786,766
EGEN,17,1,-1
EGEN,2,20,-17
E,818,825,824,817
EGEN,6,1,-1
EGEN,5,7,-6
E,853,860,859,852
EGEN,6,1,-1
E,860,867,866,859
EGEN;3,1,-1
E,867,872,871,866
EGEN,4,1,-1
/COM************ END OF SHIELD PLUG ************

/COM************ CONTACT ELEMENTS ************
/COM **** BETWEEN LOCKING RING & SHIELD PLUG ****
TYPE,4
REAL,4
E,806,401
E,807,411
E,808,421
E,809,431
E,810,441
E,811,451
E,812,461
E,813,471
E,814,481
E,815,491
E,816,501
E,817,511

/COM **** BETWEEN SHIELD PLUG & BOTTOM OF BOLT
REAL,5
E,845,525
E,852,526
E,859,527

/COM **** BETWEEN SHIELD PLUG & SHELL (ABOVE SEAL)
REAL,4
E,871,271
E,872,268
E,873,265
E,874,262

/COM **** BETWEEN SHIELD PLUG & SHELL (BELOW SEAL)
```

```
E,863,980

/COM **** BETWEEN SHIELD PLUG AND SEAL LIP
TYPE,4
REAL,6
E,247,862
E,248,870
E,249,875
SAVE
FINI
/COM************ END GAP ELEMENTS *************


!*****************************************************************
/COM***************        SOLUTION PHASE        **************
/SOLUTION
ANTYPE,STATIC,NEW
OUTRES,ALL,LAST

/COM **** TEMPERATURE DIFFERENTIAL 275 C @ CENTER, 375 C OUTSIDE ****
!
NSEL,S,NODE,,601,613          ! Centerline, 275 C = 527 F
D,ALL,TEMP,527
NALL
EALL
NSEL,S,LOC,X,11.422,12.01     ! 30 d Chamfer
NSEL,R,LOC,Y,-1.33,-0.31
D,ALL,TEMP,707
NALL
EALL
NSEL,S,LOC,X,11.99,12.01      ! Outside shell
NSEL,R,LOC,Y,-0.33,146.1
D,ALL,TEMP,707
NALL
EALL
NSEL,S,LOC,X,11.99,12.627     ! Outside Shell Transition
NSEL,R,LOC,Y,146.05,146.69
D,ALL,TEMP,707
NALL
EALL
NSEL,S,LOC,X,12.623,12.627    ! Outside Shell
NSEL,R,LOC,Y,146.67,156.01
D,ALL,TEMP,707
NALL
EALL
NSEL,S,LOC,X,12.24,12.626     ! Top of Shell
NSEL,R,LOC,Y,155.99,156.01
D,ALL,TEMP,707
NALL
EALL
SOLVE
SAVE
FINI

/COM ************ STRUCTURAL ANALYSIS *************
/COM **** PREPROCESSOR ****
```

```
/PREP7

/COM **** ELEMENT TYPES ****
ET,1,42,,,1              ! Switches
ET,2,42,,,1              !   Thermal Elements PLANE55
ET,3,42,,,1              !          to
ET,5,42,,,1              !   Structural Elements PLANE42
ET,4,12                  ! Switches LINK32 to CONTACT12
KEYOPT,4,7,1

/COM **** REAL CONSTANTS FOR GAP ELEMENTS ****
R,4,-90,1.0e8,-0.06,3.0      ! Shell/Shield Plug, Initially Open .06"
R,5,0,1.0e8,2.95e-03         ! L. Ring/Shield Plug, Under Bolt, Preloaded
R,6,0,1.0e8,0,2.0            ! Sealing Surface, initially closed

/COM **** COUPLING NODES ****
/COM **** BETWEEN LIFTING/LOCKING RING & SHELL ****
CP,1,UY,508,277              ! Start Threads
CP,2,UY,498,280
CP,3,UY,488,283
CP,4,UY,478,286
CP,5,UY,468,289
CP,6,UY,458,292

/COM **** BETWEEN BOLT & LOCKING RING ****
CP,7,UY,445,910
CP,8,UX,445,910
CP,9,UY,447,911
CP,10,UX,447,911
*DO,I,1,7
CP,10+I,UY,445+10*I,910+2*I
*ENDDO
*DO,I,1,7
CP,17+I,UY,447+10*I,911+2*I
*ENDDO
*DO,I,1,7
CP,24+I,UX,445+10*I,910+2*I
*ENDDO
*DO,I,1,7
CP,31+I,UX,447+10*I,911+2*I
*ENDDO
NALL
EALL

/COM **** BOUNDARY CONDITIONS AT AXIS (X=0) ****
CSYS,0
NSEL,S,LOC,X,0
D,ALL,UX,0
ALLS
NSEL,S,NODE,,10
D,ALL,UY,O
ALLS
SAVE
FINI

/COM **** SOLUTION ****      ! Transfer Temperatures to Structural Model
```

```
/SOLU
LDREAD,TEMP,LAST,,,,TG275,RTH   ! Reads in Temperatures from TG275.RTH file.

/COM ***** APPLYING 189 PSI INTERNAL PRESSURE *****
NALL
EALL
NSEL,S,LOC,X,0,1.26          ! Bottom Plate
NSEL,R,LOC,Y,-0.45,-0.43
SF,ALL,PRES,189
NALL
EALL
NSEL,S,LOC,X,1.24,2.14
NSEL,R,LOC,Y,-0.45,0.45
SF,ALL,PRES,189
NALL
EALL
NSEL,S,LOC,X,2.12,11.51
NSEL,R,LOC,Y,0.43,0.45
SF,ALL,PRES,189
NALL
EALL
NSEL,S,LOC,X,11.49,11.51     ! Inside Shell
NSEL,R,LOC,Y,0.43,149.64
SF,ALL,PRES,189
NALL
EALL
NSEL,S,LOC,X,11.49,11.76     ! Edge Shell to Seal
NSEL,R,LOC,Y,149.62,149.64
SF,ALL,PRES,189
NALL
EALL
NSEL,S,LOC,X,11.67,11.69     ! Seal
NSEL,R,LOC,Y,149.64,149.89
SF,ALL,PRES,189
NALL
EALL
NSEL,S,LOC,X,11.44,11.69     ! Shield Plug (above seal)
NSEL,R,LOC,Y,149.87,149.89
SF,ALL,PRES,189
NALL
EALL
NSEL,S,LOC,X,11.44,11.46     ! Side of Shield Plug
NSEL,R,LOC,Y,149.37,149.89
SF,ALL,PRES,189
NALL
EALL
NSEL,S,LOC,X,11.24,11.46     ! Shield Plug Taper
NSEL,R,LOC,Y,147.62,149.39
SF,ALL,PRES,189
NALL
EALL
NSEL,S,LOC,X,0,11.26         ! Bottom of Shield Plug
NSEL,R,LOC,Y,147.62,147.64
SF,ALL,PRES,189
NALL
EALL
```

```
SOLVE
SAVE
FINI

/COM **** POSTPROCESSING ****
/POST1
PLNSOL,S,INT
/TYPE,ALL,HIDC
/GLINE,ALL,0
RSYS,0
/DSCALE,,10
/REPLOT
LPATH,1,41              ! Bottom Plate
PRSECT
LPATH,6,46
PRSECT
LPATH,10,50
PRSECT
LPATH,50,52             ! Lower Shell
PRSECT
LPATH,62,64
PRSECT
LPATH,65,67
PRSECT
LPATH,100,101           ! Mid Shell
PRSECT
LPATH,122,123
PRSECT
LPATH,134,135
PRSECT
LPATH,156,157
PRSECT
LPATH,170,171
PRSECT
LPATH,180,181
PRSECT
LPATH,202,204           ! Upper Shell
PRSECT
LPATH,235,237
PRSECT
LPATH,985,989
PRSECT
LPATH,262,264
PRSECT
LPATH,277,279
PRSECT
LPATH,292,294
PRSECT
LPATH,601,641           ! Shield Plug
PRSECT
LPATH,601,613
PRSECT
LPATH,603,703
PRSECT
LPATH,606,706
PRSECT
```

```
LPATH,706,736
PRSECT
LPATH,766,806
PRSECT
LPATH,748,808
PRSECT
LPATH,730,810
PRSECT
LPATH,736,815
PRSECT
LPATH,869,874
PRSECT
LPATH,870,875
PRSECT
LPATH,431,434          ! Locking Ring
PRSECT
LPATH,406,426
PRSECT
LPATH,404,424
PRSECT
SAVE
```

COMPUTER RUN COVER SHEET

Project Number:	KH-8009-8
Computer Code:	ANSYS®-PC
Software Version:	5.0A
Computer System:	MS-DOS, Pentium® Processor
Computer Run File Number:	KH-8009-8-09
Unique Computer Run Filename:	TG275.out
Run Description:	Load Case 5 Output
Run Date / Time:	27 March 1997 1:03:02 PM

Prepared By: Zachary G. Sargent — Date: 4/8/97

Checked By: Joe Nichols — Date: 4/17/97

COMPUTER RUN COVER SHEET

Project Number:	KH-8009-8
Computer Code:	ANSYS®-PC
Software Version:	5.0A
Computer System:	MS-DOS, Pentium® Processor
Computer Run File Number:	KH-8009-8-09
Unique Computer Run Filename:	TT24.inp
Run Description:	Load Case 6: Thermal Transient
Creation Date / Time:	27 March 1997 1:28:56 PM

Prepared By: Zachary G. Sargent — Date: 4/18/97

Checked By: Joe Nichols — Date: 4/17/97

LISTING OF TT24.INP FILE

```
/BATCH,LIST
/FILENAM,TT24
/PREP7
/TITLE, THERMAL TRANSIENT, TEMPERATURES @ 24 hrs, 189 PSI

TREF,70              ! Reference Temperature of 70 F.

/COM **** ELEMENT TYPES ****
ET,1,55,,,1          ! Shell
ET,2,55,,,1          ! Shield Plug
ET,3,55,,,1          ! Lifting & Locking Ring
ET,4,32              ! Gap Elements Between Shield Plug & Shell
ET,5,55,,,1          ! Bolt


/COM **** REAL CONSTANTS FOR GAP ELEMENTS ****
R,4,1
R,5,0,1.0e8,2.95e-03      ! L. Ring/Shield Plug, Under Bolt, Preloaded
R,6,0,1.0e8,0,2.0         ! Sealing Surface, initially closed

/COM ************ MATERIAL PROPERTIES ************
MP,DENS,1,490/1728        ! SA240 Grade 304L
MP,NUXY,1,0.3

MP,DENS,5,490/1728        ! SA193 Grade B8M
MP,NUXY,5,0.3

/COM **** DEFINING TEMPERATURES FOR MPDATA ****
MPTEMP,1, 70,100,200,300,400,500
MPTEMP,7,600,650,700,750

/COM **** DEFINING ELASTIC MODULI ****
! SA240 Gr 304L
MPDATA,EX,1,1,28.3e+06,28.1e+06,27.6e+06,27.0e+06,26.5e+06,25.8e+06
MPDATA,EX,1,7,25.3e+06,25.1e+06,24.8e+06,24.5e+06

! SA193 Gr B8M
MPDATA,EX,5,1,28.3e+06,28.1e+06,27.6e+06,27.0e+06,26.5e+06,25.8e+06
MPDATA,EX,5,7,25.3e+06,25.1e+06,24.8e+06,24.5e+06

/COM **** MEAN COEFFICIENTS OF THERMAL EXPANSION (in./in./(F) ****
! SA240 Gr 304L
MPDATA,ALPX,1,1,0,8.55e-06,8.79e-06,9.00e-06,9.19e-06,9.37e-06
MPDATA,ALPX,1,7,9.53e-06,9.61e-06,9.69e-06,9.76e-06

! SA193 Gr B8M
MPDATA,ALPX,5,1,0,8.54e-06,8.76e-06,8.97e-06,9.21e-06,9.42e-06
MPDATA,ALPX,5,7,9.60e-06,9.69e-06,9.76e-06,9.81e-06

/COM **** THERMAL CONDUCTIVITY COEFFICIENTS (Btu/Hr-in.-(F)****
! SA240 Gr 304L
MPDATA,KXX,1,1,0.716,0.725,0.775,0.817,0.867,0.908
MPDATA,KXX,1,7,0.942,0.967,0.983,1.00
```

```
! SA193 Gr B8M
MPDATA,KXX,5,1,7.7,7.9,8.4,9.0,9.5,10.0
MPDATA,KXX,5,7,10.5,10.7,11.0,11.2

/COM************ SHELL GEOMETRY ***************
IR=11.5              ! Internal Shell Radius @ Bottom
OR=12.000            ! Shell Outside Radius @ Bottom
IR2 = 12.02          ! Inside Radius at Collar Sealing Surface
OR2 = 12.625         ! Outside Radius at Collar Sealing Surface
IR3 = 12.25          ! Inside Radius at Collar-Lifting Ring Weld

/COM **** BOTTOM COVER PLATE  [DWG SK-2-300378] ****
N,1,,-1.32           ! Row 1
N,2,1.25,-1.32
N,3,2.13,-1.32
N,10,11.423,-1.32
FILL

N,41,0.00,-0.44      ! Row 3
N,42,1.25,-0.44
N,43,2.13,0.44
N,50,IR,0.44
FILL,43,50
N,52,OR,0.44
FILL,50,52

FILL,1,41,1,21,1,10  ! Middle Row
FILL,10,50,1,30
N,32,12,-0.32
FILL,30,32
FILL,10,32,1,11
N,53,IR,1.17
N,55,OR,1.17         ! Shell Stub/Weld
FILL,53,55

/COM **** SHELL [DWGS SK-2-300379 & SK-2-300461] ****
N,65,IR,6.68
N,67,OR,6.68
FILL
FILL,53,65,3,,3,3,1

/COM **** SINGLE ROW SHELL ****
N,100,IR,7.18        ! Inside
N,140,IR,71.68
N,180,IR,136.68

N,101,OR,7.18        ! Outside
N,141,OR,71.68
N,181,OR,136.68
FILL,100,140,20,,2,2,1,2.0
FILL,140,180,19,,2,2,1,.5

/COM **** DOUBLE ROW SHELL ****
N,190,IR,137.18       ! Transition to Double Row
N,192,OR,137.18
```

```
FILL

/COM **** BASE OF CASK THROAT--ELEVATION: 138 INCHES ****
N,217,IR,142.68              ! Transition to Double Row
N,219,OR,142.68
FILL
FILL,190,217,8,,3,3,1        ! Vertical Fill

/COM **** BOTTOM OF COLLAR TRANSITION ****
N,235,IR,146.06              ! Start of Transition to Large O.D &
N,237,OR,146.06              ! Assumed Location of Shield Plug Taper
FILL
N,238,IR,146.68
N,240,OR,146.68
FILL                 ! Horizontal Fill
FILL,217,235,5,,3,3,1        ! Vertical Fill

/COM **** TOP OF COLLAR TRANSITION ****
N,241,IR,147.31              ! End of Transition to Large O.D &
N,243,OR,147.31              ! Assumed Location of Shield Plug Taper
FILL                 ! Horizontal Fill
NGEN,2,3,241,243,1,,0.75

/COM **** COLLAR SEALING SURFACE ****
N,247,IR,149.63              ! Inside Radius of Sealing Surface
N,249,IR2,149.63             ! Outside Radius at Sealing Surface
FILL                 ! Horizontal Fill

/COM **** THICK WALL AT COLLAR TRANSITION ****
NGEN,2,10,240,249,3          ! Nodes 250-259 Coincident w/240-249 (by 3)
N,255,OR2,147.31             ! Outside Surface
N,261,OR2,149.63             ! Outside Surface
N,258,OR2,148.06
N,980,IR,149.38
N,981,11.755,149.38
N,982,IR2,149.38
N,983,12.317,149.38
N,984,OR2,149.38
N,990,OR2,146.68
FILL,240,990,1,251
NGEN,2,5,980,984,1,,-0.66
FILL,246,258,1,257
FILL,253,255,1,,1,3,3
FILL,237,990,1,991

/COM **** COLLAR AT BOTTOM EDGE OF PLUG (.155" above Sealing Surface) ****
NGEN,2,3,259,,,,0.245        ! Nodes 262

/COM **** COLLAR AT TOP EDGE OF PLUG (2" above bottom Edge) ****
NGEN,2,9,262,,,,2.00         ! Nodes 271
FILL,262,271,2

/COM **** COLLAR AT BASE OF THREADS ****
N,274,IR3,152.00
N,1000,IR2,152.00
```

```
/COM **** TOP TO COLLAR (WELD CLOSURE) ****
N,295,IR3,156.00
FILL,274,295
NGEN,3,1,259,295,3,(OR2-IR2)/2
NGEN,3,1,274,295,3,(OR2-IR3)/2

/COM************ LOCKING & LIFTING RING GEOMETRY **************
RING1=7.94
RING2=9.375
RING3=9.625
RING4=10.19
RING5=12.23
LOCAL,11,0,,152.00          ! Local System z=0 at Base of Ring
CSYS,11

/COM **** TOP EDGE ****
N,401,RING1,6.13
CSYS,O
N,404,9.375,158.13
FILL,401,404,,,1
N,406,RING4,158.13
FILL,404,406,,,1            ! Top Edge

/COM **** LIFTING SURFACE ****
CSYS,11
N,421,RING1,5.13
N,424,RING2,5.13
FILL,421,424
N,426,RING4,5.13
FILL,424,426
FILL,401,421,1,,10,6,1
N,431,RING1,6.13-1.56
N,434,RING2,6.13-1.56
FILL

/COM **** BOLTING SURFACE ****
N,441,RING1,4
N,444,RING3,4
FILL
N,445,10.9375-.6875,4        ! Inside Edge of Bolt Hole
N,447,10.9375+.6875,4        ! Outside Edge of Bolt Hole
FILL
N,910,10.9375-.6875,4
N,911,10.9375+.6875,4
N,448,RING5,4              ! O.D of Ring
CSYS,0                   ! Bolt Extension
N,924,10.25,152.00         ! Double Nodes @ Bolt for Gap elements
N,925,11.625,152.00
FILL,910,924,6,,2
FILL,911,925,6,,2
N,525,10.25,151.874        ! Bottom of Bolt Extension
N,527,11.625,151.874
FILL

/COM **** BOTTOM OF LIFTING/LOCKING RING ****
CSYS,11
```

```
NGEN,2,70,441,448,1,,-4      ! Bottom Surface of Lifting/Locking Ring
FILL,441,511,6,,10,8,1       ! Fill in Lifting/Locking Ring

/COM************ SHIELD PLUG (offset y by 158.25) **************
LOCAL,20,0,,158.13
TYPE,2
PLUGR1=11.975
PLUGR2=11.45
PLUGR3=11.25
PLUGR4=7.89

/COM **** NODES AT PLUG AXIS (r=0) ****
N,601
N,602,0,-1
N,603,0,-1.994
N,606,0,-4.994
FILL,603,606,2,604
N,607,0,-6.25
N,610,0,-8.25
FILL,607,610,2,608
N,611,0,-8.75
N,613,0,-10.5
FILL,611,613

/COM **** NODAL GENERATION ****
NGEN,2,20,601,613,1,0.8825
NGEN,2,20,621,633,1,0.8825          ! Id Large Opening
NGEN,2,20,642,653,1,0.6875
NGEN,2,20,662,673,1,0.6875          ! Id Medium Opening
NGEN,2,20,683,693,1,0.4235          ! Id Small Opening
NGEN,2,10,706,713,1,0.9515          ! Center of Opening

N,730,5.4665,-1.994                 ! Od Small Opening
N,736,5.4665,-4.994
FILL,730,736,5,731
N,737,5.4665,-6.25
N,740,5.4665,-8.25
FILL,737,740,2,738
N,741,5.4665,-8.75
N,743,5.4665,-10.5
FILL,741,743
N,748,5.89,-1.0
NGEN,2,20,730,743,1,0.4235
FILL,748,750
N,766,7.265,0
NGEN,2,20,748,763,1,1.375
FILL,766,768
NGEN,3,20,766,768,1,0.3125
N,789,7.5775,-1.56
N,796,7.5775,-5.56
FILL,789,796,6
NGEN,2,20,789,796,1,0.3125
NGEN,3,20,777,783,1,0.3125

/COM **** UNDER LOCKING RING ****
N,824,8.5017,-6.25
```

```
N,827,8.5017,-8.25
FILL
N,828,8.5017,-8.75
N,830,8.5017,-10.5
FILL
NGEN,3,7,824,830,1,0.5616
NGEN,2,7,838,844,1,0.625
NGEN,2,7,845,851,1,0.6875     ! Under Bolt
N,859,11.625,-6.25
N,860,11.625,-6.917
N,861,11.625,-7.584
N,862,PLUGR2,-8.25
N,863,PLUGR2,-8.75
N,865,PLUGR3,-10.5
FILL,863,865,1
N,866,PLUGR1-0.288,-6.25
N,869,PLUGR1-0.288,-8.25
FILL,866,869,2
N,870,PLUGR1-0.288,-8.476
NGEN,2,5,866,870,1,0.288

/COM **** REFINING LIFTING EAR ****
CSYS,0
N,877,9.53,158.13
N,889,9.53,157.63
N,901,9.53,157.13
FILL,403,404,1,876
FILL,413,414,1,888
FILL,423,424,1,900
FILL,877,405,1,878
FILL,405,406,2,879,1
FILL,889,415,1,890
FILL,415,416,2,891,1
FILL,404,414,1,881
FILL,877,889,1,882
FILL,878,890,1,883
FILL,405,415,1,884
FILL,879,891,1,885
FILL,880,892,1,886
FILL,406,416,1,887
FILL,889,901,1,894
FILL,414,424,1,893
FILL,901,425,1,902
FILL,890,902,1,895
FILL,415,425,1,896
FILL,425,426,2,903,1
FILL,891,903,1,897
FILL,892,904,1,898
FILL,416,426,1,899
FILL,424,434,1,907
FILL,433,434,1,908
FILL,423,433,1,905
FILL,905,907

/COM **** COUPLING NODES ****
/COM **** BETWEEN LIFTING/LOCKING RING & SHELL ****
```

```
CP,1,TEMP,508,277          ! Start Threads
CP,2,TEMP,498,280
CP,3,TEMP,488,283
CP,4,TEMP,478,286
CP,5,TEMP,468,289
CP,6,TEMP,458,292

/COM **** BETWEEN BOLT & LOCKING RING ****
*DO,I,1,7
CP,8+I,TEMP,445+10*I,910+2*I
*ENDDO
*DO,I,1,7
CP,15+I,TEMP,447+10*I,911+2*I
*ENDDO
NALL
EALL

/COM **** ELEMENT GENERATION FOR SHELL ****
TYPE,1
MAT,1

/COM **** BOTTOM OF SHELL ****
E,1,2,22,21
E,2,3,23,22
EGEN,8,1,-1
E,10,11,30
E,21,22,42,41
E,22,23,43,42
EGEN,10,1,-1
E,11,31,30
E,11,32,31

/COM **** SHELL ****
E,50,51,54,53
EGEN,2,1,-1
EGEN,5,3,-2

/COM **** FIRST TRANSITION ELEMENTS ****
E,65,66,100
E,100,66,101
E,67,101,66

/COM **** SINGLE SHELL ****
E,100,101,103,102
EGEN,40,2,-1

/COM **** SECOND TRANSITION ELEMENTS ****
E,190,180,191
E,180,181,191
E,181,192,191

/COM **** TOP SHELL (DOUBLE ELEMENT) ****
E,190,191,194,193
EGEN,2,1,-1
EGEN,18,3,-2
E,244,245,986,985
```

```
EGEN,2,1,-1
E,256,257,988,987
E,257,258,989,988
E,985,986,981,980
EGEN,4,1,-1
E,980,981,248,247
EGEN,2,1,-1
E,982,983,260,249
E,983,984,261,260

/COM **** COLLAR TRANSITION & THREADED REGIONS ****
E,237,991,251,240
E,991,990,251
E,240,251,254,253
E,251,990,255,254
E,253,254,257,256
EGEN,2,1,-1
E,259,260,263,262
EGEN,2,1,-1
EGEN,12,3,-2
E,271,274,1000

/COM **** MERGE COINCIDENT NODES FOR SHELL ****
ESEL,S,TYPE,,1
NSLE
NUMMRG,NODE,
EALL
NALL
/COM **** END OF SHELL/COLLAR ELEMENT GENERATION ****

/COM **** LOCKING/LIFTING RING ELEMENTS ****
TYPE,3
MAT,1
E,411,412,402,401
EGEN,2,1,-1
EGEN,2,10,-2
E,413,888,876,403
E,881,404,876
E,888,881,876
E,888,414,881
E,881,882,877,404
E,414,889,882,881
E,882,883,878,877
E,889,890,883,882
E,883,884,405,878
E,890,415,884,883
E,884,885,879,405
E,415,891,885,884
E,885,886,880,879
E,891,892,886,885
E,886,887,406,880
E,892,416,887,886
E,423,900,888,413
E,893,414,888
E,900,893,888
E,900,424,893
```

```
E,893,894,889,414
E,424,901,894,893
E,894,895,890,889
E,901,902,895,894
E,895,896,415,890
E,902,425,896,895
E,896,897,891,415
E,425,903,897,896
E,897,898,892,891
E,903,904,898,897
E,898,899,416,892
E,904,426,899,898
E,431,432,422,421
E,905,423,422
E,432,905,422
E,432,433,905
E,905,906,900,423
E,433,908,906,905
E,906,907,424,900
E,908,434,907,906
E,441,442,432,431
EGEN,2,1,-1
E,443,908,433
E,443,444,434,908
E,451,452,442,441
EGEN,3,1,-1
EGEN,7,10,-3
E,454,912,910,444
E,464,914,912,454
E,474,916,914,464
E,484,918,916,474
E,494,920,918,484
E,504,922,920,494
E,514,924,922,504
E,458,448,911,913
E,468,458,913,915
E,478,468,915,917
E,488,478,917,919
E,498,488,919,921
E,508,498,921,923
E,518,508,923,925

/COM **** BOLT ****
TYPE,5
MAT,5
E,455,456,446,445
EGEN,8,10,-1
E,456,457,447,446
EGEN,8,10,-1
/COM********** END OF LOCKING/LIFTING RING **********

/COM **** SHIELD PLUG ELEMENTS ****
TYPE,2
MAT,1
E,602,622,621,601
EGEN,12,1,-1
```

```
EGEN,2,20,-12
EGEN,3,20,-11
EGEN,2,20,-10
E,707,717,716,706
EGEN,7,1,-1
E,717,737,736,716
EGEN,7,1,-1
E,731,751,750,730
EGEN,13,1,-1
E,749,769,768,748
EGEN,15,1,-1
E,767,787,786,766
EGEN,17,1,-1
EGEN,2,20,-17
E,818,825,824,817
EGEN,6,1,-1
EGEN,5,7,-6
E,853,860,859,852
EGEN,6,1,-1
E,860,867,866,859
EGEN,3,1,-1
E,867,872,871,866
EGEN,4,1,-1
/COM************ END OF SHIELD PLUG **************

/COM************ CONTACT ELEMENTS **************
/COM **** BETWEEN LOCKING RING & SHIELD PLUG ****
TYPE,4
REAL,4
E,806,401
E,807,411
E,808,421
E,809,431
E,810,441
E,811,451
E,812,461
E,813,471
E,814,481
E,815,491
E,816,501
E,817,511

/COM **** BETWEEN SHIELD PLUG & BOTTOM OF BOLT
REAL,5
E,845,525
E,852,526
E,859,527

/COM **** BETWEEN SHIELD PLUG & SHELL (ABOVE SEAL)
REAL,4
E,871,271
E,872,268
E,873,265
E,874,262

/COM **** BETWEEN SHIELD PLUG & SHELL (BELOW SEAL)
```

```
E,863,980

/COM **** BETWEEN SHIELD PLUG AND SEAL LIP
TYPE,4
REAL,6
E,247,862
E,248,870
E,249,875
SAVE
FINI
/COM************ END GAP ELEMENTS ************

!*****************************************************************
/COM***************        SOLUTION PHASE       **************
/SOLUTION
ANTYPE,STATIC,NEW
OUTRES,ALL,LAST

/COM **** TEMPERATURE AT 24 HOURS ****
NSEL,S,NODE,,601,875
D,ALL,TEMP,455              ! Plug, 455 F
NALL
EALL
D,10,TEMP,604               ! Bottom Shell, 604 F
D,109,TEMP,599              ! Shell up 17", 599 F
D,128,TEMP,603              ! Shell up 45", 603 F
D,143,TEMP,599              ! Shell up 73", 599 F
D,157,TEMP,597              ! Shell up 101", 597 F
D,175,TEMP,567              ! Shell up 129", 567 F
D,177,TEMP,583              ! Shell up 132", 583 F
D,228,TEMP,567              ! Shell up 145", 567 F
SOLVE
SAVE
FINI
/COM ************ STRUCTURAL ANALYSIS *************
/COM **** PREPROCESSOR ****
/PREP7

/COM **** ELEMENT TYPES ****
ET,1,42,,,1                 ! Switches
ET,2,42,,,1                 !   Thermal Elements PLANE55
ET,3,42,,,1                 !         to
ET,5,42,,,1                 !   Structural Elements PLANE42
ET,4,12                     ! Switches LINK32 to CONTACT12
KEYOPT,4,7,1

/COM **** REAL CONSTANTS FOR GAP ELEMENTS ****
R,4,-90,1.0e8,-0.06,3.0     ! Shell/Shield Plug, Initially Open .06"
R,5,0,1.0e8,2.95e-03        ! L. Ring/Shield Plug, Under Bolt, Preloaded
R,6,0,1.0e8,0,2.0           ! Sealing Surface, initially closed

/COM **** COUPLING NODES ****
/COM **** BETWEEN LIFTING/LOCKING RING & SHELL ****
CP,1,UY,508,277             ! Start Threads
CP,2,UY,498,280
CP,3,UY,488,283
```

```
CP,4,UY,478,286
CP,5,UY,468,289
CP,6,UY,458,292

/COM **** BETWEEN BOLT & LOCKING RING ****
CP,7,UY,445,910
CP,8,UX,445,910
CP,9,UY,447,911
CP,10,UX,447,911
*DO,I,1,7
CP,10+I,UY,445+10*I,910+2*I
*ENDDO
*DO,I,1,7
CP,17+I,UY,447+10*I,911+2*I
*ENDDO
*DO,I,1,7
CP,24+I,UX,445+10*I,910+2*I
*ENDDO
*DO,I,1,7
CP,31+I,UX,447+10*I,911+2*I
*ENDDO
NALL
EALL

/COM **** BOUNDARY CONDITIONS AT AXIS (X=0) ****
CSYS,0
NSEL,S,LOC,X,0
D,ALL,UX,0
ALLS
NSEL,S,NODE,,10
D,ALL,UY,O
ALLS
SAVE
FINI

/COM **** SOLUTION ****       ! Transfer Temperatures to Structural Model
/SOLU
LDREAD,TEMP,LAST,,,,TT24,RTH   ! Reads in Temperatures from TT24.RTH file.

/COM **** APPLYING 89 PSI INTERNAL PRESSURE ****
NALL
EALL
NSEL,S,LOC,X,0,1.26         ! Bottom Plate
NSEL,R,LOC,Y,-0.45,-0.43
SF,ALL,PRES,189
NALL
EALL
NSEL,S,LOC,X,1.24,2.14
NSEL,R,LOC,Y,-0.45,0.45
SF,ALL,PRES,189
NALL
EALL
NSEL,S,LOC,X,2.12,11.51
NSEL,R,LOC,Y,0.43,0.45
SF,ALL,PRES,189
NALL
```

```
EALL
NSEL,S,LOC,X,11.49,11.51    ! Inside Shell
NSEL,R,LOC,Y,0.43,149.64
SF,ALL,PRES,189
NALL
EALL
NSEL,S,LOC,X,11.49,11.76    ! Edge Shell to Seal
NSEL,R,LOC,Y,149.62,149.64
SF,ALL,PRES,189
NALL
EALL
NSEL,S,LOC,X,11.67,11.69    ! Seal
NSEL,R,LOC,Y,149.64,149.89
SF,ALL,PRES,189
NALL
EALL
NSEL,S,LOC,X,11.44,11.69    ! Shield Plug (above seal)
NSEL,R,LOC,Y,149.87,149.89
SF,ALL,PRES,189
NALL
EALL
NSEL,S,LOC,X,11.44,11.46    ! Side of Shield Plug
NSEL,R,LOC,Y,149.37,149.89
SF,ALL,PRES,189
NALL
EALL
NSEL,S,LOC,X,11.24,11.46    ! Shield Plug Taper
NSEL,R,LOC,Y,147.62,149.39
SF,ALL,PRES,189
NALL
EALL
NSEL,S,LOC,X,0,11.26        ! Bottom of Shield Plug
NSEL,R,LOC,Y,147.62,147.64
SF,ALL,PRES,189
NALL
EALL
SOLVE
SAVE
FINI

/COM **** POSTPROCESSING ****
/POST1
PLNSOL,S,INT
/TYPE,ALL,HIDC
/GLINE,ALL,0
RSYS,0
/DSCALE,,10
/REPLOT
LPATH,1,41                  ! Bottom Plate
PRSECT
LPATH,6,46
PRSECT
LPATH,10,50
PRSECT
LPATH,50,52                 ! Lower Shell
PRSECT
```

```
LPATH,62,64
PRSECT
LPATH,65,67
PRSECT
LPATH,100,101          ! Mid Shell
PRSECT
LPATH,122,123
PRSECT
LPATH,134,135
PRSECT
LPATH,156,157
PRSECT
LPATH,170,171
PRSECT
LPATH,180,181
PRSECT
LPATH,202,204          ! Upper Shell
PRSECT
LPATH,235,237
PRSECT
LPATH,985,989
PRSECT
LPATH,262,264
PRSECT
LPATH,277,279
PRSECT
LPATH,292,294
PRSECT
LPATH,601,641          ! Shield Plug
PRSECT
LPATH,601,613
PRSECT
LPATH,603,703
PRSECT
LPATH,606,706
PRSECT
LPATH,766,806
PRSECT
LPATH,748,808
PRSECT
LPATH,730,810
PRSECT
LPATH,736,815
PRSECT
LPATH,869,874
PRSECT
LPATH,870,875
PRSECT
LPATH,431,434          ! Locking Ring
PRSECT
LPATH,406,426
PRSECT
LPATH,404,424
PRSECT
SAVE
```

COMPUTER RUN COVER SHEET

Project Number:	KH-8009-8
Computer Code:	ANSYS®-PC
Software Version:	5.0A
Computer System:	MS-DOS, Pentium® Processor
Computer Run File Number:	KH-8009-8-09
Unique Computer Run Filename:	TT24.out
Run Description:	Load Case 6 Output
Run Date / Time:	27 March 1997 1:31:22 PM

Prepared By: Zachary G. Sargent Date 4/8/97

Checked By: Joe NIchols Date 4/17/97

MULTI-CANISTER OVERPACK DESIGN REPORT

RUPTURE DISK DATA

POTENTIAL RUPTURE DISK SUPPLIERS

Address: Fike Metal Products
704 South 10th Street
Blue Springs, MO 64015

Telephone: (816) 229-3405

Fax: (816) 228-9277

Contact: Jason Patterson
Arthur Forsyth Co.
(206) 283-5716 phone
(206) 284-7269 fax

Address: Continental Disc Corporation
3160 West Heartland Drive
Liberty, MO 64068

Telephone: (816) 792-1500

Fax: (816) 792-5447

Contact Michael Pruitt

MULTI-CANISTER OVERPACK DESIGN REPORT

MAIN SEAL DATA

CARBONE LORRAINE

Product:	Helicoflex Seals
Model/Part No.:	H-305236 REV NC
Address:	Helicoflex 2770 The Boulevard P. O. Box 9889 Columbia, SC 28209
Telephone:	(803) 783-1880
Fax:	(803) 783-4279
Contact:	Michel LeFrançois

2770 THE BOULEVARD
P.O. BOX 9689
COLUMBIA, SC 29209 USA
TELEPHONE: (803) 783-1880
TELEFAX: (803) 783-4279

Helicoflex

TELEFAX

From: Michel LEFRANÇOIS

To: Chuck TEMUS
Company: VECTRA TECHNOLOGIES
Address:
Country/State: WA

Copy :

Telefax #: 206 874 2401

Columbia, March 3, 1997

Subject: MCO CASK SEAL / HELICOFLEX H-305236 REV NC
Ref.:

Dear Sir,

Re. your recent contact with Gerard Anthoine, please find sketch attached including seal description.

Please do not hesitate to call me at the number above if you have any question.

Yours Sincerely,

Michel Lefrançois

MCO CASK SEAL
HOLDING DEVICE FOR HELICOFLEX SEAL H-305236 REV NC
(SUPERSEDES PREVIOUS DESIGN H-304668 REV A)

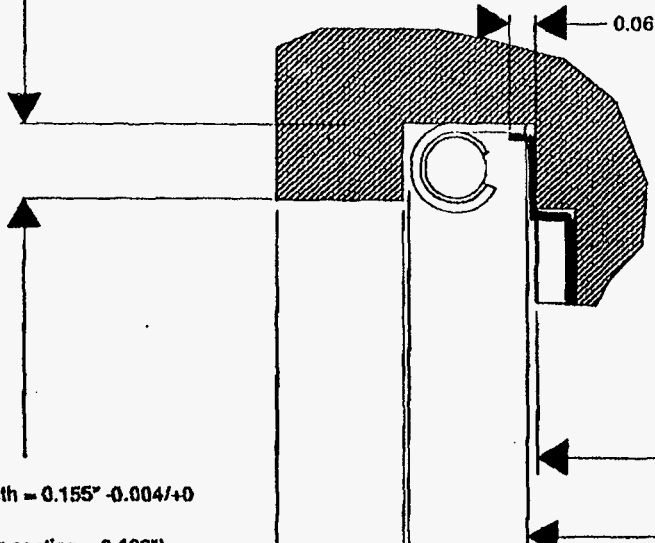

Seal Description

- > Type HN220Sp
- > Silver Jacket
- > 300Series Stainless Steel Lining
- > High Strength Alloy Spring
- > Ø23.420" OD x Ø22.940" ID x 0.186" CS
- > Required Seating Load = 1700 Lb / Inch
- > 4 clips recommended
- > Flange / Groove Sealing Faces to be 32 to 63rms

HELICOFLEX
COLUMBIA SC
ML - 2/14/97

Sketch to 4:1 Scale

MULTI-CANISTER OVERPACK DESIGN REPORT

SEAL DATA FOR PROCESS VALVE, COVERS, AND FILTERS

EG&G PRESSURE SCIENCE

Address: EG&G Pressure Science
11642 Old Baltimore Pike
Beltsville, MA 20705-1294

Telephone: (301) 937-9654

Fax: (301) 937-7027

Contact: Jeff Layer

Contact Person : Jeff Layer

Phone / fax : (301) 937-9654 / (301) 937-7027

Address : EG&G Pressure Science
11642 Old Baltimore Pike
Beltsville Md. 20705

Part Number Information

- Modified Series 80 C-Seal (Boss Size #24) PSI part number 13632
- inch O.D. silver plated C-Seal PSI part number 13503
- Series 80 C-Seal (Boss Size #12) PSI part number 801A91-0012 (INCO 718)
- Series 80 C-Seal (Boss Size #4) PSI part number 801A91-0004 (INCO 718)

PERMISSION TO USE PAGE 23

EG&G Pressure Science grants Duke Engineering Services Hanford and Parsons permission to use page 23 of our product catalog in any reports or publications necessary.

Jeff Layer
Engineering Manager
EG&G Pressure Science
11642 Old Baltimore Pike
Beltsville Md. 21797

Signed : Jeff Layer

4-10-97

CC :
Transmitted by : _____ Date _____

SERIES 80: special c-seals for "AN" fittings.

Designed specifically for AND 10049 (MS33656) Type Fittings & AND 10050 (MS33649) Type Bosses. (Supersedes Series 70)

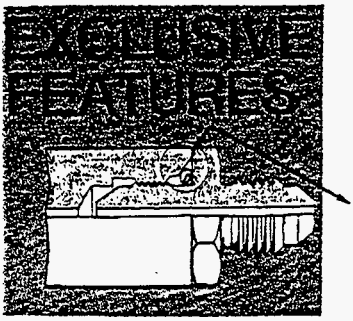

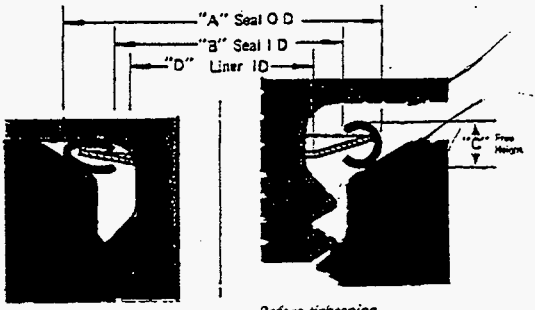

After tightening

Before tightening

- *FOOLPROOF*, its symmetrical and slips right on in either direction at installation.
- *IT'S SELF ALIGNING* and installs easily regardless of attitude of the boss.
- *FOR EASY RE-USE*, it stays with the fitting after the first compression.
- *READILY "UNSCREWS"* from the fitting when you want to discard it.
- *LOAD IS NOT TRANSMITTED* from the fitting to the boss through the seal.
- *DOES NOT REQUIRE HIGH LOAD* to effect a tight seal.
- *SEAL IS PRESSURE ENERGIZED.*
- *NO MARKING OR FRETTING* of the boss or the fitting.

HOW TO SPECIFY:

Part Number: 801A50-____-A

Only Available in a single Free Height for Given Diameter

Standard Material Thickness Per Table Below

Material Type Inconel X-750

Seal Dash No. (See Table Below)

Quality Grade

Plating (See Tables VI & VII, Pgs. 10 & 11)

BOSS SIZE NO.	SEAL DASH NO.	"A" SEAL O.D.	"B" SEAL I.D.	SEAL FREE HEIGHT "C"	"D" Liner I.D.	STD MATERIAL THICKNESS ("A" in 4th digit of P/N)
2	0002	.381	.302	.046	.278	.006
3	0003	.444	.365	.046	.341	.006
4	0004	.506	.427	.046	.397	.006
5	0005	.569	.490	.046	.459	.006
6	0006	.631	.552	.046	.517	.006
7	0007	.694	.615	.046	.579	.006
8	0008	.819	.740	.046	.699	.006
9	0009	.882	.803	.046	.761	.006
10	0010	.944	.865	.046	.817	.006
11	0011	1.100	1.021	.046	.932	.006
12	0012	1.156	1.051	.062	.995	.010
14	0014	1.281	1.176	.062	1.120	.010
16	0016	1.408	1.301	.062	1.245	.010
18	0018	1.593	1.488	.062	1.432	.010
20	0020	1.718	1.613	.062	1.557	.010
24	0024	1.968	1.863	.062	1.807	.010
28	0028	2.343	2.238	.062	2.182	.010
32	0032	2.594	2.489	.062	2.432	.010

Series 80 Seals are produced in only TWO Quality Grades:

A – Best Seal Line Finish

B – Less Than Best Seal Line Finish.

Tolerances are the same for both grades.

Both work at High and Low pressure.

Select class A for critical leakage.
Class B for low cost.

23

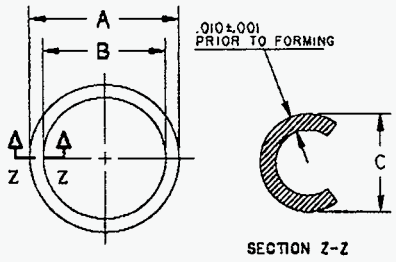

SECTION Z-Z

REVISIONS			
LTR	DATE	ECO NO.	APPROVAL

SEAL DIMENSIONS		
AVERAGE O.D. -A- SEE NOTE 2	AVG. MIN. I.D. -B- SEE NOTE 2	FREE HEIGHT -C-
$2.062^{+.000}_{-.005}$	1.969	.062±.002

NOTES:

1. TIG WELDING PRIOR-TO-FORMING PERMITTED.
2. MAXIMUM OUT-OF-ROUNDNESS OF DIAMETERS: .016
3. INDIVIDUALLY PACKAGE PER STANDARD PRESSURESCIENCE™ METHODS.
4. MARK EACH PACKAGE AS SPECIFIED ON SALES ORDER.
5. SEALING SURFACES TO CONFORM TO QCS 85345.

PRELIMINARY

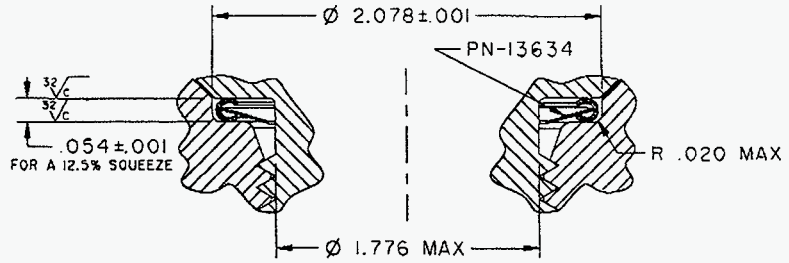

GEOMETRIC TOLERANCES TO ANSI Y14.5M-1982

MATERIAL: ~~INCONEL 718~~ INCO 718
PER AMS 5598 OR 5582
.010±.001 THICK

HEAT TREATMENT:
PER PS 0880 SEC. 11.0

PLATING:

RECOMMENDED CAVITY DETAILS

UNLESS OTHERWISE SPECIFIED DIMENSIONS ARE IN INCHES

TOLERANCES ON

LINEAR DIMENSIONS			ANGLES
.X	.XX	.XXX	1°
±	± .01	± .005	

Q.A.		
MFG		
ENG		
CHECKED		
DRAWN	S ROWLAND	05 MAR 97
APPROVED		19

EG&G PRESSURE SCIENCE

11642 OLD BALTIMORE PIKE, BELTSVILLE, MARYLAND 20705-1294
PHONE (301) 937-4010 FAX (301) 937-0134

Computer Generated

C-SEAL 02.062 O.D. FACE TYPE
INTERNAL PRESSURE

CODE IDENT NO	DWG SIZE	DRAWING NO.
15284	A	13632

SCALE: N/A EST WT N/A LB SHEET 01 OF 01

PROJECT # 10813 DIE SIZE: 02.062/063/10PIC----RHT2

REVISIONS			
LTR	DATE	ECO NO.	APPROVAL

NOTES:

1. DIMENSIONS MAY BE INSPECTED WITH LINER SEATED IN A GAUGE WITH AN I.D. OF 2.322. LINER MUST BE ABLE TO BE SEATED USING LIGHT TO MODERATE FINGER PRESSURE.
2. SURFACE FINISH 125 MICRO-INCH ALL OVER.
3. REMOVE SHARP EDGES AND CORNERS.

PRELIMINARY

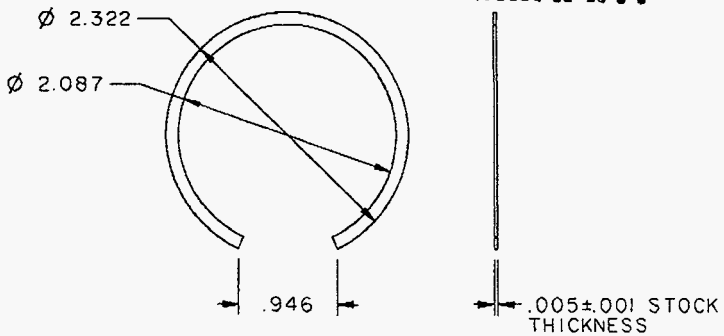

GEOMETRIC TOLERANCES TO ANSI Y14.5M-1982

MATERIAL: STAINLESS STEEL 304 PER AMS 5511, 5513 OR TYPE 301 PER AMS 5517, 5518, 5519

HEAT TREATMENT: NONE

PLATING: NONE

UNLESS OTHERWISE SPECIFIED DIMENSIONS ARE IN INCHES

TOLERANCES ON

LINEAR DIMENSIONS			ANGLES
.X	.XX	.XXX	
±	± .01	± .025	1°

Q.A.		
MFG		
ENG		
CHECKED		
DRAWN	S ROWLAND	05 MAR 97
APPROVED		19

EG&G PRESSURE SCIENCE

11642 OLD BALTIMORE PIKE, BELTSVILLE, MARYLAND 20705-1294
PHONE (301) 937-4010 FAX (301) 937-0134

Computer Generated

C-SEAL LINER

CODE IDENT NO	DWG SIZE	DRAWING NO.
15284	A	13634

SCALE: N/A EST WT N/A LB SHEET 01 OF 01

REVISIONS			
LTR	DATE	ECO NO.	APPR'L

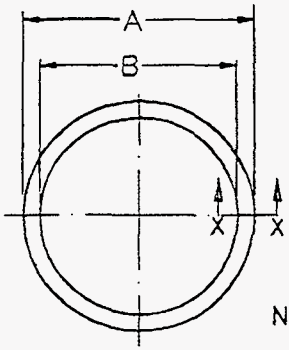

SEAL DIMENSIONS	AVG. O.D. -A- SEE NOTE 1	AVG. MIN I.D. -B- SEE NOTE 1	FREE HEIGHT -C-
BEFORE PLATING	3.520/3.510	3.310	.128/.122
AFTER PLATING	(3.519)	(3.305)	(.129)

NOTES:

1. REQUIRED OUT OF ROUNDNESS OF DIAMETERS : .100-.130
2. PLATING REQUIRED OVER THIS AREA AS SPECIFIED.
3. PLATING OPTIONAL AND MAY BE INCOMPLETE IN THIS AREA.
4. INDIVIDUALLY PACKAGE PER PSI SPECIFICATION.
5. MARK EACH PACKAGE AS SPECIFIED ON SALES ORDER.
6. VARIATION IN BASE MATERIAL HEIGHT SHALL BE LESS THAN .0005"/0.5" AROUND ENTIRE PERIMETER OF THE SEAL.
7. TIG WELDING PRIOR TO FORMING PERMITTED.

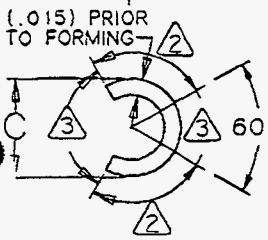

SECT. X-X

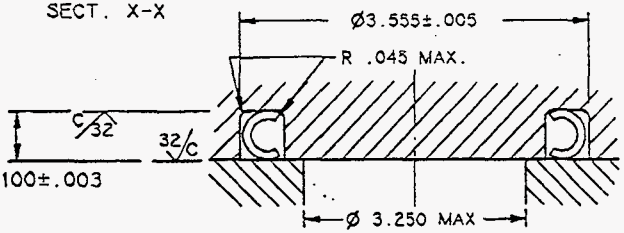

RECOMMENDED CAVITY DETAILS

THIS COPY PRINTED
SEP 1 2 1996
FOR VERIFICATION OF CAVITY DETAILS ONLY
301-937-4010

MATERIAL: INCO 750 PER AMS 5598 .015±.001 THK	PLATING: SILVER PER PSA 0900 .0015-.0025 THK	HEAT TREATMENT: PER PS 0880 SECT. 11.2

UNLESS OTHERWISE SPECIFIED DIMENSIONS ARE IN INCHES

TOLERANCES ON			
LINEAR DIMENSIONS			ANGLES
.X	.XX	.XXX	
	±.01	±.005	±1°

	R E Hen	9-12-96
MFG	R.E.M.	9-12-96
ENG	T. Nozan	9/12/96
CHECKED	C. Hazut	9/10/96
DRAWN	H PORTER	10 SEP 96

EG&G PRESSURE SCIENCE
11642 OLD BALTIMORE PIKE, BELTSVILLE, MARYLAND 20705-1294
PHONE (301) 937-4010 FAX (301) 937-0134

C-SEAL

3.520 O.D. FACE TYPE, INTERNAL PRESSURE

CODE IDENT NO	DWG SIZE	DRAWING NO.
15284	A	13503

EG&G Pressure Science has been a supplier of high performance metallic seals since 1959. Typical applications for these seals have been in aerospace, industrial, main frame computer and semiconductor processing equipment. Over the past 37 years, a large body of empirical, application-specific data has been gathered on the performance of EG&G seals; this combined with economical mass-customization of core sealing technologies has led to the positive reputation enjoyed by EG&G Pressure Science and to competitive advantages for our customers.

A Pressure Science C-Seal was chosen for this application because near zero leakage may be obtained in a cavity with a rough surface finish (up to 64 RMS). This is accomplished by plating the seal with a soft metallic plating that is smeared during compression of the seal. Gold plating is used on this seal because of the maximum temperature requirement (gold plating is used up to 1400° F). C-Seals undergo some plastic deformation when installed at the 10 to 20% squeeze recommended, however when re-used in their original cavities, they return to their original load.

In an effort to meet the re-sealability requirements (at least 5 re-seals while maintaining 1×10^{-4} cc per second Helium) on the Pressure Science SERIES 80 AN fitting seal (boss size 12 &24), three different seal face angles were considered. A standard MS33649 boss (30° angled face) and a modified MS33649 boss (with a 45° angled face) were tested, and compared with data from a cavity with parallel sealing faces (0° angle). These tests were performed using a Varian Vacuum Products Mass Spectrometer Leak Detector, using Helium at 100 psi. All three configurations were capable of containing the maximum leakage to below 1×10^{-9} cc per second Helium on the initial seal. The fixture with parallel sealing faces (0° angle) was capable of 10 reseals, staying in the 1×10^{-9} range. The other two configurations were capable of up to eight reseals in the 1×10^{-6} range, if everything was aligned and re-seated very carefully. The problem with the "conical" shaped cavity (30°- 45° angled faces) is that the seal can seat un-parallel to the top (flat surface) sealing face. The degree of offset possible is not enough to affect the initial installation / compression of the seal. However once the seal has been deformed, a new seating position with a different amount of offset may create a gap that in some locations around the circumference of the seal is either larger or smaller than the previous gap. This could create large leak paths or locally over compress the seal. Evidence of this happening is the seal free height variation after multiple reseals (as much as .005"). Normal free height variation of a compressed C-Seal is about .001 inches total.

MULTI-CANISTER OVERPACK DESIGN REPORT

HEPA FILTER DATA

MCO INTERNAL HEPA FILTER SPECIFICATION

1.0 INTRODUCTION

1.1 BACKGROUND

The MCO internal filter is required for radioactive contaminant filtration inside the MCO to protect process equipment from contamination. The filter(s) will be filtering a saturated steam atmosphere at steam flows of 35 cubic feet per minute (cfm) at temperatures not to exceed 375°C inside a vacuum chamber. The filter(s) shall provide HEPA removal efficiency of 0.3 micron (μm) particles and have a 40 gram loading capacity with 10 inches water column differential pressure at 35 cfm air flow. The filter(s) shall be sized such that 3.5 inches water column differential pressure at 35 cfm air flow clean. The filter(s) shall be capable of regeneration by back flow of gas or liquid, and be moisture repellant to saturated steam. The filter/manifold(s) shall not be larger than the envelop described in drawing H-2-828049 and be no larger than 2.6 inches in diameter (see drawing for conceptual filter arrangement scheme). The filter/manifold(s) shall be constructed of all 316 stainless steel. The filter structure shall also withstand a 100g drop and maintain a minimum of 50% of flow and filter loading capacity but HEPA efficiency is not required to be maintained after the drop.

2.0 REQUIREMENTS

2.1 FILTER DOCUMENTATION REQUIREMENTS

The bidders shall provide documentation and/or test results for the following requirements equivalent to or superseding the documents described below with their proposals:

2.1.1 Filter Airflow Resistance

Test reports or flow versus differential pressure curves for a clean airflow (Helium, steam) to meet 3.5 inches water column at 35 ACFM air.

2.1.2 Filter Removal Efficiency

Test reports documenting DOP, or other approved test material, 0.3 μm particulate removal efficiency of 99.97%.

2.1.3 Filter Loading Capacity

Test reports documenting filter loading capacity in accordance with standard SAE J726 or ASHRAE 52-76 using ASHRAE fine test dust.

2.1.4 Filter Moisture Repellency

Test report shall document filter efficiency and differential pressure performance while subjected to water spray during ASHRAE particulate loading per Section 2.2.3.

2.1.5 Filter Regenerability

Test reports documenting filter regeneration (minimally 70% clean differential pressure, loading capacity recovery, and 99.97% particulate removal efficiency after regeneration) per ASHRAE 52-76.

2.1.6 Filter Rough Handling

Certificate of Conformance, test reports, or engineering calculations shall be provided confirming the filter will withstand a 100g drop or 100 times the filter(s) weight in bending and maintain 50% of original rated flow and 50% of filter loading capacity after the drop. The filter shall sustain no visible integrity loss (cracks or punctures in the filter media, endcaps, or manifold hardware.)

2.1.7 Filter Heating Resistance

Test reports documenting resistance to heated air and maintain particulate removal efficiency during 240 hours of 375°C per standards UL-586 and MIL-F51068.

2.2 FILTER DESIGN REQUIREMENTS

2.2.1 Filter Airflow Resistance

The filter(s) shall be sized for a clean airflow (Helium, steam) of 3.5 inches water column at 35 ACFM air.

2.2.2 Filter Removal Efficiency

The filter(s) shall be designed to withstand a DOP challenge, or other approved test material, of 0.3 μm particulate and remove 99.97% of the particulate.

2.2.2 Filter Loading Capacity and Surface Area Maximization

The filter(s) shall provide maximum resistance of 10 inches water column when loaded with 40 grams of ASHRAE fine test dust at 35 ACFM air in accordance with standard SAE J726 or ASHRAE 52-76. The filter(s) shall also be designed to provide a maximum surface area square footage.

2.2.3 Filter Moisture Repellency

The filter(s) shall provide maximum repellency of 10 inches water column when the filter is challenged with supersaturated steam containing a minimum 1 gram of entrained water per 1 cubic foot of air at 35 ACFM.

2.2.4 Filter Regenerability

The filter(s) shall be capable of reverse back pulsing with gas to regain minimally 70% loading

capacity as specified in Section 2.2.2 and differential pressure and 99.97% particulate filtration per ASHRAE 52-76. The gas reverse back pulse shall consist of rapid application of reverse flow of helium or argon to the filter manifold (all filters) from a reservoir with a maximum size of 5 cubic feet, at a maximum initial pressure of 100 psi through a 20 foot length of 1 inch ID maximum discharge line.

2.2.5 Filter Heating Resistance

The filter shall be designed to with stand resistance to heated air and maintain particulate removal efficiency during 240 hours of 375°C per standards UL-586 and MIL-F51068.

2.2.6 Filter Design Basis Accident Functionality

The filter/manifold(s) shall be designed to withstand a 100g drop or 100 times the filter(s) weight in bending and maintain 50% of original rated flow and 50% of filter loading capacity after the drop. The drop or force loading to the filter shall be applied midway on the filter in a radial direction normal to the longitudinal filter axis. The filter shall also be designed to physically withstand forces related to a 1035 kPa (150 psig) pressure spike transient and maintain 50% flow and 50% loading capacity after the pressurized pulse. The intent of this requirement is to maintain a high removal efficiency (non-HEPA rated) by assuring no visible holes, punctures, cracks, or extensive deformations that circumvent or block the filter flow path.

2.3 CONSTRUCTION REQUIREMENTS

2.3.1 Filter Media

The filter(s) shall be all stainless steel construction--316L, or other suitable corrosion resistant materials. Filter end caps (if required) shall be constructed from 316L stainless steel and NOT attached to filter media by epoxies or sealants. Rolled or metallic end cap bonding such as welding or brazing may be appropriate. If weld bonding is utilized, it is suggested that low carbon base materials such as 316L or other similar corrosion resistant materials be used.

2.3.2 Filter Mounting Hardware

The filter(s) mounting hardware (i.e. supports, manifolds, etc.) shall be constructed from 316L stainless steel, other low carbon base, or corrosion resistant material (painted surfaces shall not be acceptable). The filter(s) shall be mounted to manifold in such a manner to prevent build-up of excess free water inside the manifold. The filter(s) shall be mounted near (+/- 0.0625 inches) the bottom of the manifold and the manifold angled such that any free water in the manifold will drain back into the filter media. The total weight of the filter and mounting hardware shall not exceed 22.7 kg (50 lbs). Refer to drawing H-2-828049 for filter envelop space, mounting suggestions, and additional construction suggestions.

2.3.3 Filter Environmental Conditions

The filters shall be designed and constructed to withstand the following environmental conditions:

- Design Basis Accident equal to a 100g drop or 100 times the filter(s) weight in bending per design stated above;
- Temperature ranges from -20 to 375°C (375°C for a time period of 240 hours);
- Internal to external accidental pressure spike transient of 1035 kPa (150 psig) as described above; and
- All gas atmospheres such as Nitrogen, Hydrogen, Helium, Argon, Oxygen, air, and steam.

3.0 OPTIONS

3.1 Optional bids may be submitted for filters meeting the following design conditions:

Option #1: 35 acfm flow at 6.0" water column with 0.3 μm efficiency

Option #2: 35 acfm flow at 3.5" water column with 0.5 μm efficiency

All other specification requirements remain in force for the optional bids.

MULTI-CANISTER OVERPACK DESIGN REPORT

K BASIN MCO SHIELD PLUG THICKNESS TECHNICAL EVALUATION

TABLE OF CONTENTS

1.0 INTRODUCTION AND SUMMARY 1

2.0 GENERAL APPROACH 1

3.0 SHIELDING ANALYSIS 9
- 3.1 Source Term 9
- 3.2 Geometry 10
- 3.3 Material Densities 10
- 3.4 Analysis Basis 10

4.0 RESULTS 12

5.0 UNCERTAINTIES 11

6.0. REFERENCES 14

Appendices

Appendix A
Source Terms 15

Appendix B
Calculation of Results 17

Appendix C
Ratio Based Internal Central Cylinder Plug 21

1.0 INTRODUCTION AND SUMMARY

This evaluation provides an assessment of dose as a function of plug thickness for the K Basin Multiple Canister Overpack (MCO), including an initial assessment of areal and centerline doses. Based on input from Westinghouse Hanford Company, areal averages were calculated for the more complex plug designs. The emphasis has been on obtaining the thickness that will result in an average dose rate of 100 mrem/hr or (30 mrem/hr) at contact on the plug for peak loads and nominal loads of fuel, respectively. The calculations are based on the design planned by Parsons Infrastructure & Technology Group and summarized in Table 1-1 below. This report provides a summary of the technical assumptions, basis, and results of the calculations.

Table 1-1.

Source Term	Cleaned and reloaded Mark IV fuel elements; 5.43 MTU; 11 energy bins; 8.29 x 10+15 photons/s
Model Geometry	27cm SS lid; 4 instrument penetrations; 1" central and lateral holes thru lid; 4 cm SS plate under filters; collar in place
Detector Geometry	Tissue equivalent plastic in 3 thicknesses and 8 rings
Requirement --< 100 mrem/h contact, areal average (Peak Load0	< 7 mrem/h photons and neutrons
Requirement -- < 30 mrem/h contact, areal average (Nominal Load)	< 2 mrem/h photons and neutrons

2.0 GENERAL APPROACH

For modeling purposes, each fuel element in the MCO is assumed to be 2 concentric shells of uranium, and each of these shells are treated as separate sources for analyses. This calculation uses MCNP 4A to allow a more realistic model of the MCO and to directly determine the impacts of scattering. The MCNP software is a Monte Carlo shielding analysis program, which assesses the shielding based on nuclear interactions. Figure 1-1 summarizes the presumed geometry of the fuel. The density of the uranium, steel, and air matrix is listed in Section III. Fifty-four fuel elements are assumed per layer, four layers, and no gap between layers. The center space (number 28 in Figure 2-1B) is occupied by an air filled stand pipe.

The basic assumptions are summarized below:

- The shielding calculation used the extremely conservative activity concentrations in Table 3.8 of WHC-SD-SNF-TI-009, Rev. 0. These values were used to ensure a corresponding level of conservatism in the results. The photon emissions of these

radionuclides were placed in 12 energy bins from 100 keV to 3 MeV. If the total yield fraction is less than 1 X 10^{-6} the contribution is treated as zero.

- Nominal fuel calculations are based on the an average 4-tier Concept B MCO of Mark IV fuel, as specified in Table 3.8 of WHC-SD-SNF-TI-009, Rev. 0.
- The dose is calculated by determining the energy absorbed per gram in the plastic material used in the ICRU sphere.
- The dose assumes a layer of this material directly above the top of the MCO.
- Three different thickness of material were assumed (i.e., 1cm, 15cm, and 30 cm) to provide a result comparable to the 15 cm radius ICRU sphere. Note that the detectors are cylindrical rings except for the inner most detector, which is a disk. The diameters of these rings were 1, 5, 10, 15, 20, 25, 30, and 32.5 cm in radius.
- For the neutron dose assessment, the dose is assumed to be 10% of the gamma dose based on the information in the procurement documentation.

The geometry and shield data used in calculating the shielding are summarized in Figures 2-1A through 2-1D. The general model of the MCO, lid, and fuel used in the calculations is shown in Figure 2-1E. The current design is summarized in the drawings included in the reference listing.

Figure 1-1
Fuel Geometry Information

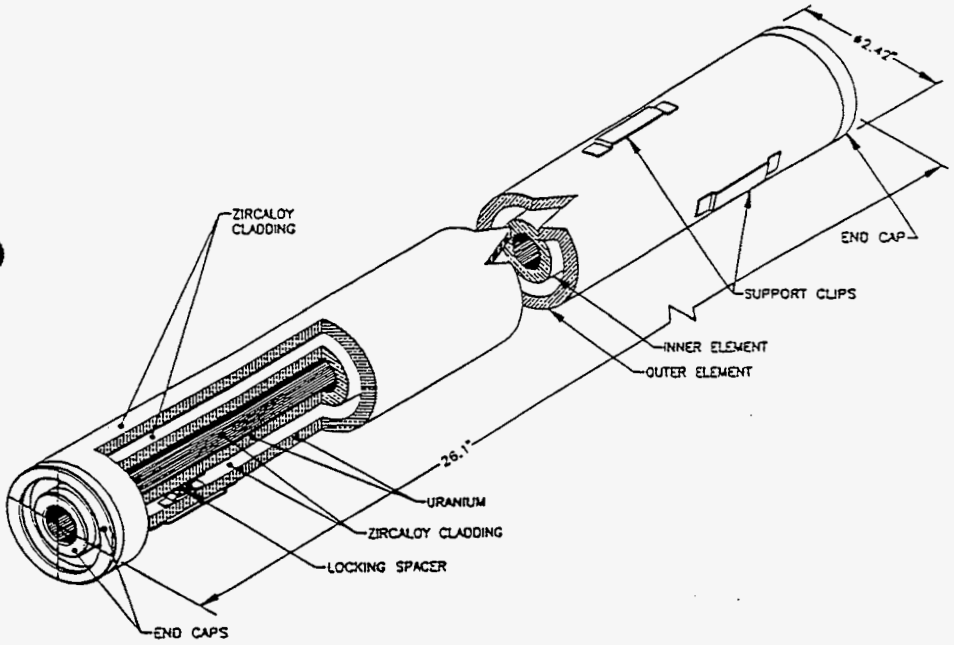

105-N REACTOR MARK IV FUEL ELEMENT ASSEMBLY
(DS00015A)

Figure 2-1A
MCO Geometry
(Full length vertical cross section, dimensions in cm)

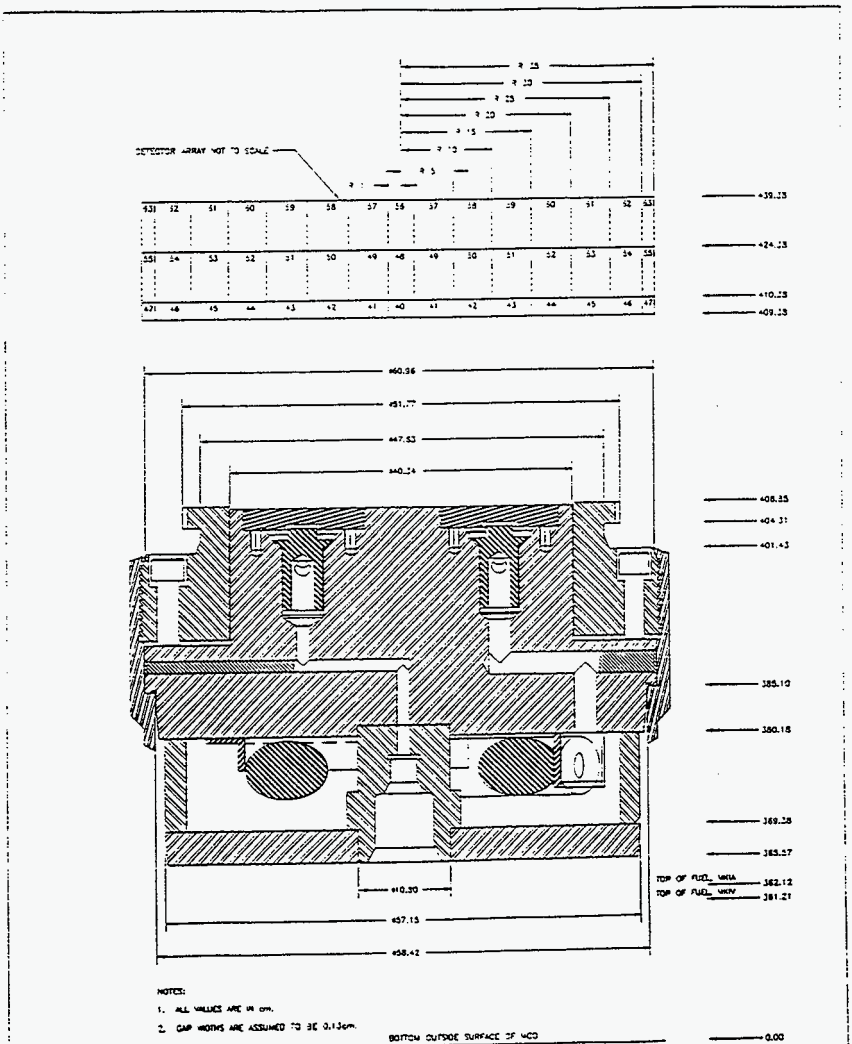

Figure 2-1B
MCO Geometry
(Fuel element horizontal cross section, dimensions in inches. Number 28 is an open pipe.)

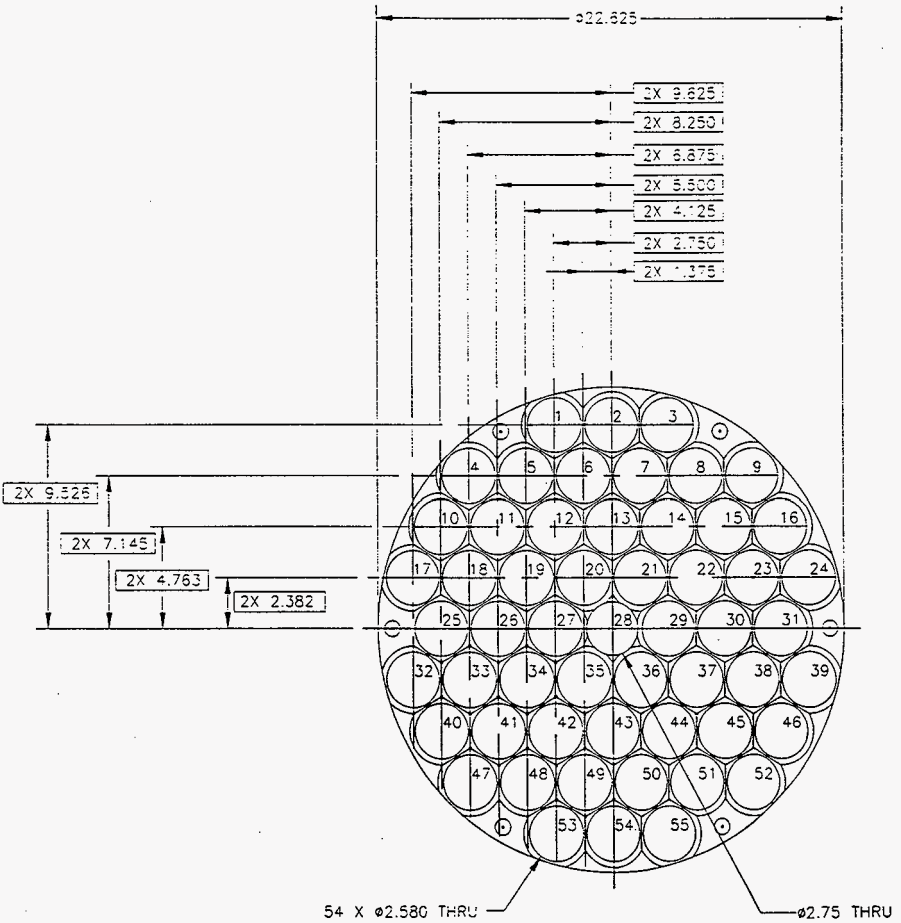

Figure 2-1C
MCO Geometry
(Lid vertical cross section, dimensions in inches)

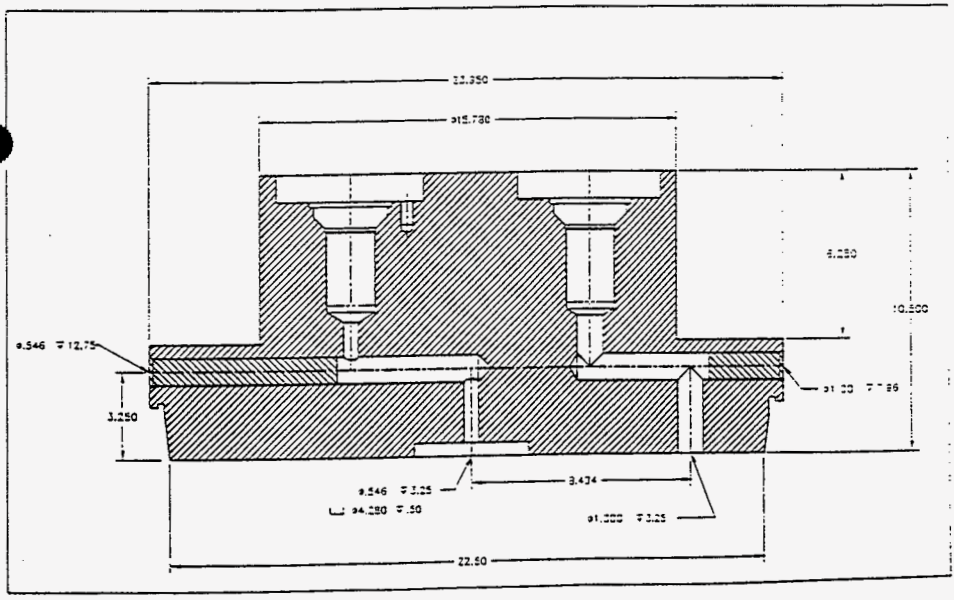

Figure 2-1D
MCO Geometry
(Lid Horizontal cross section, dimensions in inches)

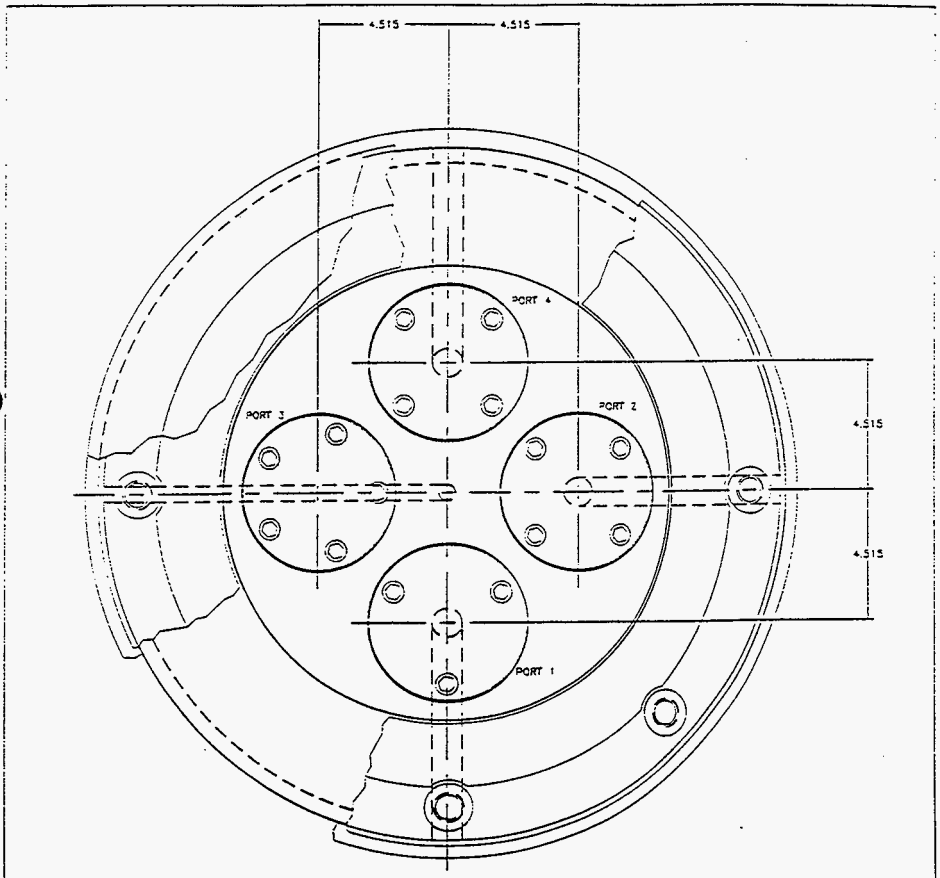

Figure 2-1E
Model of MCO and Fuel Used for Calculations

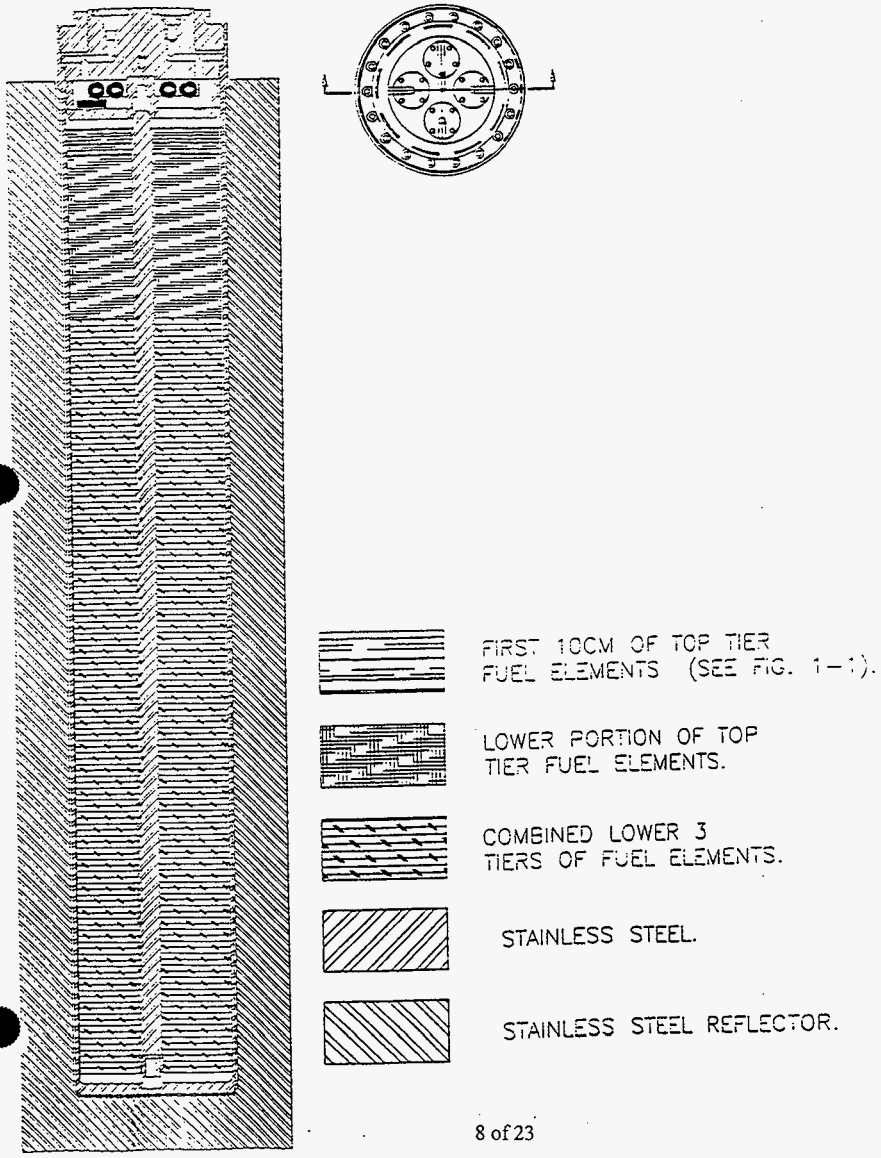

3.0 SHIELDING ANALYSIS

The shielding analysis used MCNP 4A, a computer application developed by Los Alamos National Laboratory. This computer program is documented in "MCNP 4A Monte Carlo N-Particle Transport Code System," Radiation Shielding Information Center (RSIC) document CCC-200 (see references). This software was validated in the Parsons Infrastructure & Technology Group Computer Software Validation Record, consistent with the applicable procedures. The verification of performance (completed under another DOE contract and part of a prior task) was documented in the Parsons Infrastructure & Technology Group Computer Software Verification Record number PD-A-VV-003.

The MCNP 4A output files, which include a reflection of the input deck, are maintained in the Parsons Infrastructure & Technology Office in Richland, Washington as part of the quality records associated with this calculation.

3.1 Source Term

The fission and activation product inventory from Table 3.8 of WHC-SD-SNF-TI-009, Rev 0, was used as the source term for this calculation. This source has been corrected for decay to January 1, 1995, in this table. Loaded MCO handling will not begin until 1997; however, no adjustment from January 1, 1995 to the 1997 time frame was made, as an additional means to ensure conservatism. The uranium content in the fuel was based on the data in Table 3.8 of WHC-SD-SNF-TI-009, Rev. 0. The emission spectra are based on the information in the Brookhaven database (see Appendix A). The relative energy is calculated based on this data and is summarized in Table 3-1 of this document. As indicated previously, the energy distribution is binned as discussed in Section II. Each bin value represents the upper bound of the energy bin. Therefore, the Cs-137 662 keV photon was treated as an 800 keV photon. This is conservative by about a factor of 3-4. In the 600 keV bin, it would have been non-conservative by about a factor of 2. The total fuel weight per MCO was 5.43 MTU. The total source strength was 8.294 x 10^{15} photons per second.

Table 3-1.
Energy Distribution

Upper Energy Bound (keV)	Fraction
100	0.089
200	.206
300	.0032
400	.00037
500	.19
600	.0047
800	.496

1000	.0031
1500	.0059
2000	.00076
2500	.0000083

3.2 Geometry

The geometry is shown in Figures 2-1A and 2-1B. It is assumed that the tolerance is 0.13 cm; this is assumed to be the width of the gaps for assessing scattering. The ports at the top of the MCO shield plug are assumed to be filled with inserts which reduce the holes passing through the ports to one inch, except for the rupture disk port which has no insert. The port cover plates are **not** in place in any of the calculations.

3.3 Material Densities

The MCNP input includes the density and the makeup of the materials. This information is summarized in Table 3-2.

Table 3-2.
Material Properties

Material	Density (g/cm^2)	Material Constituents (Cross-section file number [i.e., MCNP cross-section file]* and weight fraction)
Steel	8.03	26000 (1)
Air (gas)	0.001293	7000 (0.755), 8000 (0.232), 18000 (0.013)
Uranium	17.86	92000 (1)
Tissue (ICRU)	1.0	1000 (0.102), 6000 (0.123), 7000 (0.035), 8000 (0.72893), 11000 (0.0008), 12000 (0.0002), 15000 (0.002), 16000 (0.005), 19000 (0.003), 20000 (0.00007)

*The MCNP is the atomic number multiplied by 1000. For example, the atomic number of carbon is 6, so the cross-section file number is 6000.

3.4 Analysis Basis

The shielding analysis was completed for each of the two uranium portions (i.e., concentric shells) of each fuel element for the top layer or tier of fuel elements (see Appendix B). However, to improve convergence of the results, the first 10 cm of each top tier fuel element is treated as a separate source. Representative fuel elements were selected for running after the top 10 cm of the first tier rather than running all 108 cases, as a means to reduce analysis time. The bottom 3

tiers fuel element tiers are treated as a single unit and have negligible impact on the results, due to self-shielding effects. Calculations relative to the bottom 3 tiers fuel elements are not included in the spreadsheets referenced in the appendices of this document; however, they are included in the computer output files maintained with the quality assurance records.

4.0 RESULTS

MCNP was used to calculate the energy deposition per photon in a 1cm, then 14cm, and an additional 15 cm thick disk of ICRU tissue equivalent plastic. With the known photon flux the energy deposition per unit time was then calculated. This was then converted to dose using the definition of a rad which is 100ergs/g of energy deposition in tissue. The choice of the detector thickness was chosen to provide worst case and an range which covers the ICRU 15 cm radius sphere (i.e., the basis for deep dose). What we calculated was the average energy per gram of tissue deposited in the first cm of tissue, a 15cm thick layer of tissue, and a 30 cm thick layer of tissue. This provides a accurate direct method of assessing dose; although using a ICRU sphere center at each location would have been mor accurate, it was not technically feasible. This approach is consistent with the current ICRP approach for assessing the dose used by EPA, DOE, and NRC. The calculation of flux though a detector is an indirect rather than direct method Of assessing the dose and may be less accurate.

The results of the calculations are summarized in Table 4-1. These results were calculated using the spreadsheets referenced in Appendix B. As indicated in Section 2, data is given for a disk/ring source 1cm, 15 cm, and 30 cm thick; areal averages are given in the last two rows. The bottom row in this table includes the neutron dose consistent with the assumptions identified in the proposal (i.e., the neutron dose is 10% of the photon dose). The dose measured by an ionization chamber at about 1 to 2 inches above the MCO top would probably be similar to the doses specified for 1 cm thick disk. The doses for the 15 and 30 cm disks would provide the probable range of actual dose to an individual consistent with the ICRU model for deep dose.

The doses in Table 4-1 are for peak loading. The doses for the average fuel load would be about 26% of these values.

5.0 UNCERTAINTIES

The presence of a steel plug over the central cylindrical tube was not included in the original model. The reduction in doses from this plug were estimated using MCNP as described in Appendix C. This dose will range from 100% to 45% of the original values depending on the location. In the central area, where most of the areal dose is generated, the dose will range from about 100% to 65%. Overall, the plug introduces less than 10% measure of conservatism for the doses. Convergence with this data is very high.

The MCNP software provides an assessment of convergence. When using a Monte Carlo program it is necessary to use enough particles (i.e., case studies) to adequately represent the behavior of the system (i.e., obtain convergence of the predicted results with the true results). This must always be a compromise between the time required to run the calculation and the amount of convergence obtained. Approximately 10,000,000 particles (i.e., cases studies) were

run for each source term analyzed. This means since each fuel element or section of fuel element (i.e., the upper 10 cm of the first fuel element) has an inner and outer portion each of these portions were run for 10,000,000 particles. Because of the limitation of time the goal was to achieve a convergence of about 0.3 or better for the most affected detector and less than 0.2 for areas that are significant dose contributors. Other detectors would have lower convergences for a specific source. Since the higher values of convergences have a larger uncertainty, the doses were recalculated using values with convergence results of less than 0.3 for one of the analyses. The results of this recalculation were comparable so it is reasonable to assume that the estimate is reasonable and conservative. Since the basic source geometry is simple it is a reasonable assumption that the area where there would be significant dose contributions would be the area where the convergence is low, since the photon flux in these area is the highest. Note, the top layer of source (i.e., the upper 10 cm of the first fuel element) requires 108 separate runs and each run requires about 7 hours to complete so the 10,000,000 particles analysis reflects a reasonable limit for this analysis.

The results for the MCO without the cap (Table 4-1) indicate a higher degree of accuracy. In this scenario, convergence values are all lower than 0.3 except for the center detector (see Appendix B). Since there is not fuel directly below the center detector, the detector is not a significant contributor to the dose. This means that limited convergence for this case and any accompanying inaccuracies will have no significant impact on the overall dose estimate. Also, better results and convergence were possible in the calculations for this case from knowledge of the ratio of inner cylindrical section contribution relative to the outer cylindrical section contribution that had been ascertained from the first set of calculations (where the MCO cap was attached). With this ratio pre-determined (the value is constant for all scenarios) the data could be consolidated for the fuel sections, which had the impact of minimizing statistical uncertainties. Consequently, the calculations for the scenario without the MCO cap in place have much lower uncertainties and better accuracy, notwithstanding the same 10,000,000 particle case study Monte Carlo analysis was used.

Table 4-1
Dose Results Without Cover Cap

Outer Radius of Detector (cm)	1 cm Detector		15 cm Detector		30 cm Detector	
	Thickness (cm)	Dose Rate (mrem/hr)	Thickness (cm)	Dose Rate (mrem/hr)	Thickness (cm)	Dose Rate (mrem/hr)
1	1	< 3	1 to 14	< 17	15 to 30	< 2
5	1	< 8	1 to 14	< 8	15 to 30	< 3
10	1	< 17	1 to 14	< 13	15 to 30	< 5
15	1	< 23	1 to 14	< 13	15 to 30	< 3
20	1	< 7	1 to 14	< 7	15 to 30	< 3
25	1	< 3	1 to 14	< 2	15 to 30	< 2
30	1	< 3	1 to 14	< 2	15 to 30	< 2
32.5	1	< 3	1 to 14	< 2	15 to 30	< 2
Areal Average	1	< 7	15	< 5	30	< 3
Areal Average plus neutron dose	1	< 7	15	< 5	39	< 3

6.0. REFERENCES

Courtney, J. C., 1976. "A Handbook of Radiation Shielding Data," American Nuclear Society, ANS/SD-76/14.

Radiation Shielding Information Center (RSIC), 1989. "QAD-CGGP," CCC-493.

Rockwell, Theodore III, 1956. Reactor Shielding Design Manual, McGraw-Hill Book Co., Inc.

Los Alamos National Laboratory, 1995. "MCNP 4A Monte Carlo N-Particle Transport Code System," Radiation Shielding Information Center, (CCC-200).

Willis, W. L. and A. N. Praga, 1995. "105-K Basin Material Design Basis Feed Description for Spent Nuclear Project Facilities," WHC-SD-SNF-TI-009, Rev. 0.

Parsons Infrastructure & Technology Group Internal Documentation:

Computer Software Verification Plan, Project No. PD-A-VV-003, MCNP 4A: A Monte Carlo N-Particle Transport Code, December 18, 1996.

Computer Software Validation Record, "MCNP 4A: A Monte Carlo N-Particle Transport Code, December 18, 1996.

Computer Software Verification Plan, Project No. 7282651-03000, Computer Software: SUPERSHIELD, Discipline: Health Physics, Version: 1.0, draft November, 1995.

Appendix A
Source Terms

Appendix A, Source Term

The determination of the source term was based on the Brookhaven National Laboratory data from the Internet (i.e., www.nndc.bnl.com). This is the most current emission spectra data available. The calculations were performed using an EXCEL 7.0 spreadsheet, containing 3 sheets. The calculation sheets are described below, and the spreadsheet output is available in the Parsons Infrastructure & Technology Group QA and/or project files for Project KH-8009-8, project number 730531.

Sheet 1 uses the photon data from sheet 2 to find the sum the photon emissions from each radionuclide for each of the energy bins in Table 3-1.

Sheet 2 is the data downloaded from the Brookhaven database.

Sheet 3, Cells B4 to Y20 summarizes the photon emissions for each of the energy bins by radionuclides from Sheet 1. Cells C6 to Y6 provide the activity of each radionuclide per MTU based on the data specified in WHC-SD-SNF-TI-009, Rev 0. Cell Z6 is the total activity. Cells AC4 to BA20 calculate the total photon emissions in each bin (i.e., BA4 to BA20 contain the totals from cells AC4 to AZ20). Cells AC4 to AZ20 are the activities of the radionuclides times the photon emissions in the bin divided by the total activity. Cells E36 to E48 normalize the photon emissions to photon emission fractions based on cells BA4 to BA20.

Appendix B
Calculation of Results

Appendix B, Calculation of Results

The calculations were performed using an EXCEL 7.0 spreadsheet, containing 4 sheets. The calculation sheets are described below, and the spreadsheet output is available in the Parsons Infrastructure & Technology Group QA and/or project files for Project KH-8009-8, project number 730531. Sheets 1 and 2 address the dose with the cover cap in place and sheets 5 and 6 address the dose without the cap in place.

Dose With Cap

In Sheet 1 the energy flux absorbed (i.e., MeV/photon/g) and the value of the convergence from the MCNP are included in the value column for each detector (i.e., see Table B-1 and Row 1 in the spreadsheet). The energy flux absorbed is in the odd number rows and the convergence value is in the even numbered columns for the various detector cell numbers. The first two entries for any MCNP cell (i.e., Column A) are the outer concentric ring of fuel material and the second two are the inner ring of fuel material for a fuel element. Matrix Total adds the inner and outer ring energy flux absorbed data. Odd number rows are set to one in the Convergence columns and the first three rows in the Matrix Total columns are set to zero so they have no impact on the results. The even numbered rows in the Convergence column are set to one if the convergence value is zero (i.e., no data detected); otherwise they are set to the value of the convergences. Row 225 has the total energy flux absorbed and the lowest value of the convergence for MCNP cell for the first layer of fuel (i.e., the top 10 cm of a first fuel element). Row number 450 has the same data for the second layer of fuel (i.e., the balance of the top fuel element). Row number 457 has this same data for both layers. The areas in light gray in the second layer are MNCP numbers; the other values are based on these numbers as shown in Table B-2. Note that MCNP cell 28 has no fuel in it so its values are zero - it is marked with dark gray.

Sheet 2 Rows 3 to 10 and columns E, L, and S contains the grand total energy flux absorbed. The dose is then calculated in columns F, M, and T using the values shown in rows 14 to 38. The lowest applicable convergence values from Sheet 1 are summarized in columns G, N, and U. The total for each detector is then calculated in row 11. Row 12 is the cumulative dose from a 1cm thick, 15 cm thick, and 30 cm thick detector. Similar values were calculated below this with the cover cap off using a Microshield correction factor for the reduced shielding (see Appendix C for the Microshield runs) and then for the same calculation using this Microshield data for cover cap off but with an additional 4 cm of shielding over the first 25 cm of the MCO top.

Dose Without Cap

The layout and calculations in sheets 5 and 6 are the same as sheets 1 and 2 discussed above except as described below. The dose from the inner cylinder is based on the dose from the outer cylinder, corrected based on the relative ratio between the inner and outer cylinders from sheet 1 and averaged over all values with a convergence value of less than 0.3.

Table B-1.
Detectors

Inner Radius (cm)	Outer Radius (cm)	Detector Thickness (cm)	MCNP Cell Number for Detector
0	1	1	40
1	5	1	41
5	10	1	42
10	15	1	43
15	20	1	44
20	25	1	45
25	30	1	46
30	32.5	1	47
0	1	14	48
1	5	14	49
5	10	14	50
10	15	14	51
15	20	14	52
20	25	14	53
25	30	14	54
30	32.5	14	55
0	1	14	56
1	5	15	57
5	10	15	58
10	15	15	59
15	20	15	60
20	25	15	61
25	30	15	62
30	32.5	15	63

Table B-2.
MCNP Cell Equivalence for Second Layer

MCNP Cell Basis for Unanalyzed Cells	Cell To Which This Applies
(2+17+24)/3	1,3,4,10,16,32,39,40,46,47,52,51,53,54,55,
25	8,31,48, 58
33	6,7,11,15,18,23,38,41,45,49,50
(26+30+44)/3	12,13,14,19,22,26,30,34,37,42, 43,44,
31	20,21,27,28,29,35,36

Appendix C
Ratio Based Internal Central Cylinder Plug

Appendix C, Ratio Based Internal Central Cylinder Plug

Sheet 7 contains the MCNP run results with no cap on the MCO and no lid. The fuel is bare except for the small plug over the center cylinder (the "AP##" files) and the same case with this small plug removed (the "AP##a" files). The ratio is calculated in the indicate column. The next two columns are the ratio minus the layer specific mean and minus the general mean, respectively. The calculations of the mean and standard deviation are shown, as well as the projected error from averaging, which is assumed to be twice the standard deviation.

Sheet 7 used data with no top or cap but with the plug in place. These values are calculated based on the steel plug compared to the ratio with a plug made only of air. This was calculated for cells 2, 7, 13, and 20. The results for the first layer are summarized in Table C-1 and indicates the cells to which they would apply. Sheet 7 of the EXCEL spreadsheet can be found in the project files.

Table C-1.
Plug Correction for the First Layer

Calculated Cell	Equivalent Cells	Plug Shield Correction Factors for Each of the Detector Disks/Rings ±0.05 (Radius of Disk/Ring in cm)							
		1	5	10	15	20	25	30	32.5
2	1,3,4,910,17,24,32,39,40,46,47,52, 53,54,55	1.00	1.00	1.00	1.00	1.00	1.00	1.00	1.00
6	5,7,8,11,15,18,22,25,30,31,33,37,41, 45,48,49,50,51	1.00	1.00	1.00	1.00	1.00	.95	.95	.95
13	12,14,19,23,26,34,38,42,43,44	.90	.95	.90	.90	.90	.90	.90	.90
20	16,21,27,29,35,36	.45	.60	.65	.70	.75	.80	.90	.90

WAREHOUSE PLAN

FOR

MULTI-CANISTER OVERPACK

Contract No. KH-8009

April 1997

Revision 0

TABLE OF CONTENTS

1.0 INTRODUCTION 1
1.1 General Considerations 1
1.2 Container/Storage Configurations 1
1.3 Warehouses/Storage Allocation of Components and Storage Areas 2

Table 1 3

Table 2 4

2.0 HANDLING AT WAREHOUSE 4
2.1 Incoming Parts 4
2.2 Parts Segregation/Storage 5
2.3 Outgoing Parts 5

3.0 HANDLING AND USAGE OF MCO PARTS AT CSB & K BASINS 5
3.1 Reception and Staging 6

Figure 1. Flowchart of MCO Component Warehousing, Handling, and Usage 7
3.2 Packaging Removal/Component Inspection 7
3.3 Component Assembly/Integration into MCO 8

4.0 QUALITY ASSURANCE REQUIREMENTS 8
4.1 Incoming Parts Inspection 8
4.2 Pre-Usage Inspection 10

5.0 INVENTORY CONTROL 10
5.1 Tracking of MCO Components 10
5.2 Parts Supplies 10

6.0 COST 10
6.1 Warehouse Space Rental 10
6.2 Special Handling Cost 10

1.0 INTRODUCTION

The Multi-Canister Overpacks (MCO) will contain spent fuel removed from the K East and West Basins. Approximately four hundred MCOs will be fabricated for this purpose. The MCO consists of different components/sub-assemblies manufactured by one or more vendors. All components/sub-assemblies will be shipped to central warehouses which will inspect and store these components until they are required at the K Basins. The components will generally be stored as received from the manufacturer, with specified protective coatings, wrappings, and packaging intact, to maintain mechanical integrity of the components and to prevent corrosion. Components will be shipped as needed from the warehouses to the basins. At the basins, the components will be unwrapped, assembled as necessary and used in the MCO loading process.

1.1 General Considerations

Enough warehouse space is needed to house all MCO components ordered and to carry out the necessary inspections and staging activities. Warehouse facilities must maintain suitable environmental conditions to prevent corrosion of the components, and must have suitable storage shelving as required for smaller parts and ample floor space for larger components, such as the MCO shell and dip tubes. Detailed requirements on receiving, storage and handling of all MCO components are found in ASME NQA-1-1994 Edition, Subpart 2.2, "Quality Assurance Requirements for Packaging, Shipping, Receiving, Storage, and Handling of Items for Nuclear Power Plants." All warehousing, receiving, and handling of MCO components shall conform to the Level C Item requirements. Conformance to these requirements will satisfy the Quality Control and Assurance requirements for the warehousing activities. The preferred locations have easy access to the K Basins. The warehouse at Building 2101M in the 200 East area will be used for MCO components that are first sent to the CSB (shells, locking rings, and MCO caps), and a warehouse in the 100K area in Building 190 Kanister Storage Building East (KE) will be used for all the other MCO components, or those that are used first at the K Basins.

A project records control center (Record Control) needs to be established to receive inspection, storage, handling, and usage records generated during project execution. Records Control will maintain a database reflecting status on all components. The database will list components by serial numbers and/or container numbers for unnumbered parts, as well as inventory numbers used in tracking (see Section 5.0). Records referencing usage of components by number will be forwarded to Records Control, which will track all activity in the database.

1.2 Container/Storage Configurations

Table 1 lists MCO components, container/packaging configurations, and storage configurations to be used for the given component. Standard packaging identification is performed consistent with ASME NQA-1-1994 Edition, Subpart 2.2, Section 3. (Also see the Fabrication

Specification.)

1.3 Warehouses/Storage Allocation of Components and Storage Areas

There must be adequate warehouse space for staging components, and receiving and transferring components and MCO component sets as required. It is planned that two main warehousing locations will be used for MCO components:

Building 2101M, 200 East Area - Building 2101M is a large warehouse in current use for storage of equipment, waste containers, etc. It has in place the QC required item tracking system which must be used for MCO components stored here. The MCO components that are first used at the CSB (MCO shells & locking ring assembly, and the MCO cap) will be stored in Building 2101M, which is geographically close to the CSB. This warehouse has the capability to store up to 120 MCO shells in packages of two as described in Table 1. The MCO caps would be stored here on a long-term basis until needed for welding onto the MCOs at the Hot Conditioning System (HCS) annex to the CSB.

Warehouse in 100K Area - A warehouse located in Building 190 KE in the 100 area will be established for storage of all the other MCO components. Transfers of parts from this warehouse to poolside at the K Basins will be done so as to keep a steady supply of the parts available for ongoing fuel loading campaigns at the basins, without exceeding the limited staging space available for these parts within the basin facilities. Quality Control (QC) item tracking capability equivalent to that used at 2101M must be established and used at this warehouse.

Table 2 provides estimates of warehouse space needed for the components or subassemblies.

Table 1
Packaging & Storage Configurations

MCO Component	Factory Packaging	Storage Configuration
1a. MCO Shell	-Two shells per package, side by side, horizontally at the same level in the package. Packages stackable up three to four tiers deep. Packages not exceeding dimensions of 36"x53"x168".	Storage will be as is in manufacturer's packaging and crating at Building 2101M warehouse. (Stacked)
1b. Locking Ring	-Installed in the MCO shell at the factory.	Storage will be as is in the MCO shell and its packaging.
2. Shield Plug	-Each shield plug assembly separate on individual holder/heavy-duty pallet.	Storage will be as is in manufacturer's packaging and crating at Building 190 KE warehouse. (No Stacking)
3. Dip Tube	- Manufacturer may package multiple dip tubes per package, but the total package dimensions will not exceed that of the MCO shell package described above.	Storage will be as is in manufacturer's packaging and crating at Building 190 KE warehouse. (No Stacking)
4. MCO Cap	-Packaged/shipped on pallets (Two caps per pallet)	Long-term (up to eight years) storage required. Store in original packaging at Building 2101M warehouse. (No Stacking)
5. Mark IA Basket; Mark IA Scrap Basket; Mark IV Basket; Mark IV Scrap Basket	- Loaded on pallets, with a maximum of two baskets per pallet	Storage will be as is in manufacturer's packaging and crating at Building 190 KE warehouse.
6. 24" diameter shield plug seal - "helicoflex" seal	- Individually wrapped and packed in crates; approximately 20 seals/crate, 24"x30"x30" crate size.	Storage will be as is in manufacturer's packaging and crating at Building 190 KE warehouse.
7. Small parts	Packed in crates in conveniently sized lots.	Storage will be as is in manufacturer's packaging and crating at Building 190 KE warehouse.

Table 2
Warehouse Space Estimates

Component or Subassembly	Warehouse space needed for storage
1a. MCO Shell	Assuming 36"x53"x168" packages, 15 to 20 warehouse spaces (for three tier to four tier stacking) sized about 4½ by 14 feet (individual area of 62 ft^2) are needed, for a total required storage area of at least 930 to 1240 ft^2, plus aisle access area as required. This assumes that the maximum inventory of MCO shells requiring storage remains at or below 120 units.
1b. Locking Ring	Not applicable (locking rings are stored within MCO shells).
2. Shield Plug Assembly	Assuming one shield plug per pallet, where pallet footprint is 16 ft^2, and a maximum inventory of 120 units, up to 1920 ft^2 will be needed.
3. Dip Tube	Assuming a maximum inventory of 120 units, 1" diameter dip tubes and crating of 20 tubes per 12"x12"x 156" package, a 6 ft by 13 ft foot storage area will be needed, no stacking required.
4. MCO Cap	Assuming maximum inventory will be all 400 caps, and that two caps can be placed per pallet, 200 16 ft^2 pallets covering a cumulative area of 3200 ft^2 will need to be stored for up to five years.
5. Baskets (all types)	Baskets placed two per pallet can be stored at the 100K Area warehouse. Storage area required for the baskets for two MCOs would be 80 ft^2. The total storage space needed for the baskets for the maximum inventory of 120 units would be 4800 ft^2.
6. 24" diameter shield plug seal - "helicoflex" seal	Minor storage space requirement. If crated in lots of 20, no more than 6 24"x30"x30" crates would need to be stored.
7. Small parts	Minor storage space requirement. Estimate that between 20 and 40 small crates will need to be stored at any given time. These could be stacked.

2.0 HANDLING AT WAREHOUSE

2.1 Incoming Parts

All incoming parts are shipped by the manufacturer to the Hanford Site. They are received at the 1100 Area Central Warehouse, at which time a receipt inspection will be performed according to QA requirements (see NQA-1). Upon passing inspection, the parts are redirected to the proper warehouse destination on the basis of component type (Section 1.3 lists the warehouse destinations of the different MCO components). Arriving at the warehouse, they are unloaded, by forklift for palleted items, and are placed in the storage location designated for the particular component. The forklift used at the 2101M warehouse must have sufficient capacity to handle the MCO shell package. Items, except those small enough to be stored on shelving, will be on pallets and movable to their storage location on the warehouse floor by forklift. Items will be stacked as allowable, to minimize the storage cost billed to the SNF Project by the warehouses and/or maintain more efficient storage configurations. Written records prepared during the receiving process per NQA-1 will be forwarded to Records Control, and copies will follow the parts up to usage.

2.2 Parts Segregation/Storage

Components will be separated based on the determined packaging and storage conditions for the given component, or other warehouse constraints. Warehouse managers should ensure that components are arranged and tracked so withdrawal of specified sets of components for given shipments to the CSB and K Basins can be rapidly performed. Also, to minimize risk of corrosion during extended storage, arrangements should be made in segregation and storage of the components to create turnover of existing warehouse inventories as new shipments of components are received from the manufacturers.

Storage of the parts will be performed according to NQA-1 requirements. Storage records are to be maintained and will be forwarded to Records Control; copies follow the parts up to usage.

Cleanliness control of all MCO components in all warehouses shall be performed in accordance with ASME NQA-1-1994 Edition, Subpart 2.2 requirements for Level C items.

2.3 Outgoing Parts

On demand from the designated SNF Project parts coordinator, the warehoused parts are to be collected and placed on a flatbed trailer or in trucks for transport to the CSB and K Basins as required. MCO shells (with pre-installed locking rings) are shipped to the CSB no less than one package at a time with two shells per package (more than one package can be shipped per shipment if requested).

Other parts are taken from the 190 KE warehouse, loaded on a truck or carts as appropriate, and transferred per given directions to the K East or K West Basin.

Storage records will be updated to reflect the transfer of the parts out of the warehouse; the records will be forwarded to Records Control.

3.0 HANDLING AND USAGE OF MCO PARTS AT CSB & K BASINS

Section 3 concerns handling and usage of MCO components received at the CSB and K Basins. CSB Operations and K Basin Operations will be responsible for these handling operations, and for providing designated areas or stations and equipment within the basins to accommodate staging, packaging removal and component assembly activities as required.

Figure 1 depicts the handling and usage of MCO components at the key facilities. Components and assemblies are shown passing from warehouse to facility or from facility to facility as labeled arrows. Staging, packaging removal, handling, and other processing activities associated with the components are listed as bulleted phrases within the facilities and facility areas where they are executed.

3.1 Reception and Staging

Each basin is to have a forklift on hand to remove all palleted MCO components brought from the warehouses on transport trucks. The palleted items need to be moved into a designated staging/assembly area within the facility where the items can be temporarily staged pending use in the MCO loading process. This area must be a non-radiological zone, so that packaging materials and pallets can be disposed and/or recycled without generating any radiological waste or requiring radiological survey of materials leaving this zone.

Upon notice from the coordinator, loading, transfer and unloading of the MCO shells from Building 2101M to the CSB will take approximately two working days. Shield plugs and crates of other parts from the 190 KE warehouse can be delivered within one working day. Basin Operations is responsible for notifying warehouses in advance of needs for MCO components so as to assure timely availability of the components. K Basins Operations must coordinate with the CSB for timely arrival of cask/MCO shells from that facility.

Figure 1. Flowchart of MCO Component Warehousing, Handling, and Usage

3.2 Packaging Removal/Component Inspection

MCO components should remain in the staging/assembly area, and in the original packaging materials until just prior to use, to minimize contamination and potential mechanical damage. At the same time, all protective coatings, plastic covers and caps, and other packaging materials should be removed prior to introduction of the components into radiological zones, for reasons stated above. Operators are to remove all packaging material, and otherwise ready the components for use according to directions listed in Table 3. Note that all activities described are performed prior to introduction of the completed assemblies into radiological zones.

Written records shall be made documenting the unpackaging, pre-use inspection, and use of MCO components. These records will be added to the other records accompanying the components, and the complete set of records will be forwarded to Records Control. Records Control will update the component database accordingly.

3.3 Component Assembly/Integration into MCO

The steps that occur in the course of component assembly and integration into a loaded MCO are depicted in Figure 1. Some of the steps are sequential, but many activities will need to be conducted simultaneously to maintain production schedules and assure availability of parts. It is beyond the scope of this plan to develop a detailed time and motion study for these activities; however, this should be done to confirm that adequate personnel support, facility processing area, and other resources are available to meet processing needs.

4.0 QUALITY ASSURANCE REQUIREMENTS

4.1 Incoming Parts Inspection

Inspection of components will be completed at the fabrication site per NQA-1 requirements. Documentation of QA performed at the manufacturer will accompany each shipment. Incoming parts will be inspected for number and damage during shipping and handling prior to receipt at the warehouse only; inspections will be documented. If a shipment is received damaged and found not to meet the necessary criteria, the damaged units will be returned, at the manufacturer's expense, for replacement/repair. All deficiencies will be noted in a nonconformance report for each shipment. Specifics on receiving/inspection can be found in NQA-1-1994 Edition, Subpart 2.2, Section 5.

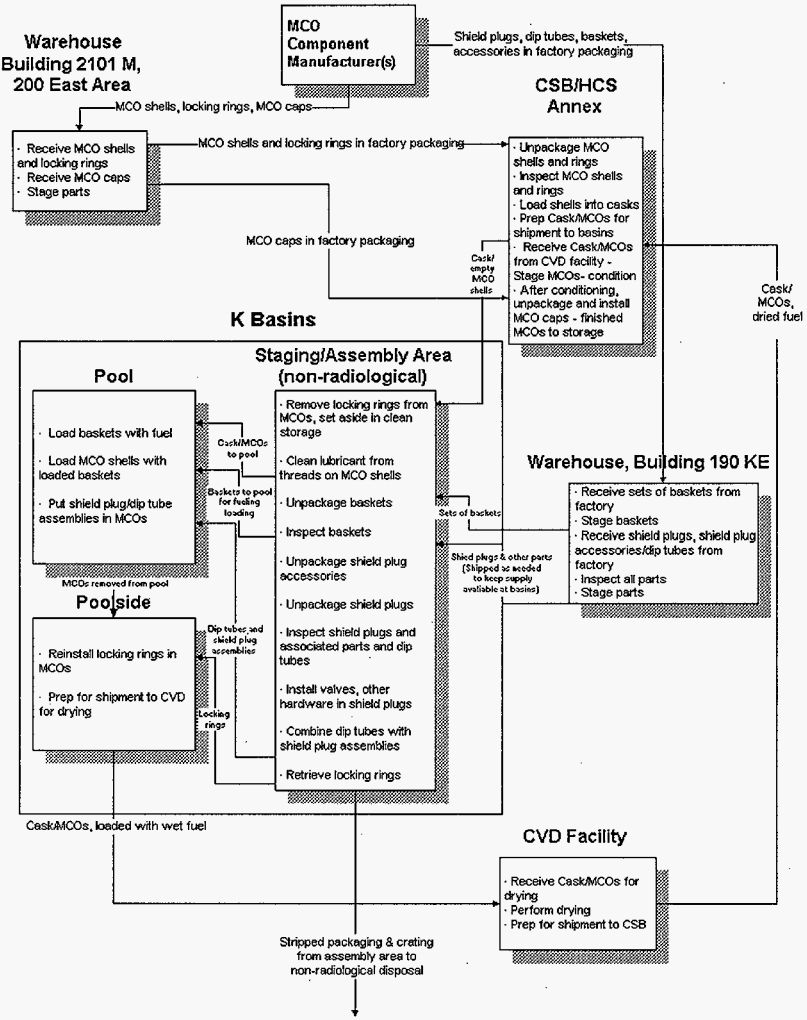
MCO Component Manufacturer(s)
Shield plugs, dip tubes, baskets, accessories in factory packaging
Warehouse Building 2101 M, 200 East Area
CSB/HCS Annex
MCO shells, locking rings, MCO caps
· Receive MCO shells and locking rings
· Receive MCO caps
· Stage parts
MCO shells and locking rings in factory packaging
· Unpackage MCO shells and rings
· Inspect MCO shells and rings
· Load shells into casks
· Prep Cask/MCOs for shipment to basins
· Receive Cask/MCOs from CVD facility - Stage MCOs- condition
· After conditioning, unpackage and install MCO caps - finished MCOs to storage
MCO caps in factory packaging
Cask/ empty MCO shells
Cask/ MCOs, dried fuel
K Basins
Staging/Assembly Area (non-radiological)
Pool
· Load baskets with fuel
· Load MCO shells with loaded baskets
· Put shield plug/dip tube assemblies in MCOs
Cask/MCOs to pool
Baskets to pool for fueling loading
MCOs removed from pool
Poolside
· Reinstall locking rings in MCOs
· Prep for shipment to CVD for drying
Dip tubes and shield plug assemblies
Locking rings
· Remove locking rings from MCOs, set aside in clean storage
· Clean lubricant from threads on MCO shells
· Unpackage baskets
· Inspect baskets
· Unpackage shield plug accessories
· Unpackage shield plugs
· Inspect shield plugs and associated parts and dip tubes
· Install valves, other hardware in shield plugs
· Combine dip tubes with shield plug assemblies
· Retrieve locking rings
Sets of baskets
Shield plugs & other parts (Shipped as needed to keep supply available at basins)
Warehouse, Building 190 KE
· Receive sets of baskets from factory
· Stage baskets
· Receive shield plugs, shield plug accessories/dip tubes from factory
· Inspect all parts
· Stage parts
Cask/MCOs, loaded with wet fuel
CVD Facility
· Receive Cask/MCOs for drying
· Perform drying
· Prep for shipment to CSB
Stripped packaging & crating from assembly area to non-radiological disposal

Table 3
Packaging Removal/Inspection Requirements

Component or Subassembly	Packaging Removal/Inspection Requirements
1a. MCO Shell	MCO shells are removed from packaging at the CSB. Protective coatings are to be removed from any exposed sealing or threaded surfaces on the shell and locking ring. Verify locking ring is snugly screwed into place. A final inspection of integrity of the shell may be performed here prior to loading the shell into an empty cask. Following this, an inspection of the MCO/cask assembly may be required.
1b. Locking Ring	The locking ring is removed from the MCO shell upon receipt of the cask/MCO from the CSB. Excess lubricant is to be wiped from the ring before storage of the ring pending reinstallation of the ring in the MCO after loading of fuel in the MCO is complete.
2. Shield Plug	Shield plugs are removed from packaging at the staging/assembly areas in the basins. Port plugs and any protective coatings are carefully removed, and surfaces cleaned if necessary. The safety class rupture disk with orifice plate, the two process valves, and the process relief valve, all installed at the manufacturer's shop, will be inspected for correct installation to proper torque values. This process should be done in conjunction with unpacking of other shield plug hardware just previous to assembly of the complete shield plug assembly.
3. Dip Tube	Dip tubes are removed from factory crating at the staging/assembly areas at the basins. Shrink-wrap, plastic caps, and protective coatings on threads are to be removed from a given dip tube as shield plug assemblies are completed. Inspection of the tube will be performed, including thread integrity and length measurements to ensure that the shield plug/dip tube assembly to be made will fit in the MCO.
4. MCO Cap	MCO caps will be unpackaged and inspected at the CSB. Integrity of weld surfaces is to be verified.
5. Baskets (all types)	Baskets are unpackaged and inspected at the basins staging/assembly areas.
6. 24" diameter shield plug seal - "helicoflex" seal	Shield plug seals are unpackaged and inspected just prior to use.
7. Small parts	Each part is to be removed from crating, removed from any of its shrink-wrap or packaging, and visually inspected prior to use.

4.2 Pre-Usage Inspection

Physical inspection of all components is required before use of the components in the MCO assembly process. These inspections will occur at the basins staging/assembly areas, as per the specific requirements given in Section 3.2. The inspection will be documented for each part and subassembly.

5.0 INVENTORY CONTROL

5.1 Tracking of MCO Components

MCO components will be tracked by an inventory number assigned. Travelers will be used to track pieces of the MCO as they are brought together.

For all received and outgoing MCO components (relative to the warehouses), entries in the Hanford Inventory Control System database are to be made, or alternately any functionally equivalent database may be used by Records Control for this function. Careful referencing of the serial numbers on parts (where applicable) is to be used in the database entries.

5.2 Parts Supplies

The facilities consuming MCO parts will coordinate with the warehouses to maintain a constant supply of these parts at the assembly areas. To accomplish this, operations at CSB and the K Basins will maintain an inventory of parts on hand, and replenish the supply by arranging for parts shipments from the warehouses when inventory drops below predetermined levels.

6.0 COST

6.1 Warehouse Space Rental

Cost will be dependent upon the space required, duration of storage, and location of the warehouse.

Building 2101M currently charges $\$8.50/ft^2$/year for storage space. There is no ongoing cost to the SNF Project for storage space in the 190 KE warehouse, once initial capital costs for readying the warehouse for use are made.

6.2 Special Handling Cost

Special handling cost will be determined based upon the packaging for each MCO part.

MULTI-CANISTER OVERPACK DESIGN REPORT

ASME CODE EXCEPTION REPORT

1.0 Purpose

This Code Exception Report is prepared to document and provide justifications for all deviations from the ASME Code Section III requirements. The MCO is a non-stamped Code vessel. The design of the MCO is required to be constructed to the intent of the ASME Code as specified in the Performance Specification. The MCO design criteria relative to Code requirements is specified in the following excerpt from the Performance Specification.

"The MCO shall be designed in accordance with DOE Order 6430.1A, General Design Criteria (DOE 1989). Safety Class (SC) and Safety Significant Components (SSCs), providing fuel containment, confinement, and criticality control, shall be constructed to meet the intent of ASME Boiler and Pressure Vessel Code, Section III, to the extent specified in this Performance Specification, Rules for Construction of Nuclear Power Plant Components, Subsection NB (ASME 1995) under the component safety group as guided by the NUREG/CR 3854, UCRL-53544, Fabrication Criteria for Shipping Containers, 1984. The Nuclear Regulatory Commission (NRC) positions in Regulatory Guides 1.84 and 1.85 on ASME Section III code cases shall be reviewed prior to using such code cases for safety class applications for the MCO. All deviations from Subsection NB shall be documented and justified."

In addition to NB, this Code Exception Report will also include a review of Sections NF and NG for those elements of the design that are required to meet the intent of these sections.

2.0 General Information

This section summarizes the description of the MCO components, the MCO function, and the application of the Code requirements to the MCO components.

2.1 Component Description

The MCO assembly is a single purpose SNF (Spent Nuclear Fuel) container that is capable of maintaining SNF subcriticality at all times and maintaining SNF containment after having been closed and sealed. The MCO assembly consists of a shell assembly, a shield plug assembly, and five to six SNF fuel baskets. It contains features that will allow processing of its SNF contents. The MCO package is an MCO assembly loaded with SNF.

The containment boundary is made up of the shell assembly and shield plug with process ports and fittings, main seal and the cover cap. The containment boundary items are to be constructed to the intent of the ASME Code Section III, Subsection NB. Since the locking ring provides structural support for the shield plug, it is also constructed to the intent of Subsection NB.

All MCO fabricator pressure boundary welds shall be made in accordance with ASME Section III, Division 1, NB-3350. All welds shall be sufficiently smooth to enable easy decontamination. Butt welds shall be ground flush to within .03 inches of base metal. Weld joint designs shall avoid potential contamination traps to the greatest extent practical. All MCO pressure boundary welds and welds bearing the weight of the fully loaded MCO must be designed for and pass 100% volumetric examination (x-rays or ultrasonic) per ASME requirements. Exceptions for field welds and the structural welds for the rupture disks shall be documented.

The Mark 1A baskets must comply with Subsection NG because geometry control is required for criticality control. The design shall meet Service Level A requirements for normal operating loads and Service Level D for accident conditions under ASME Boiler and Pressure Vessel Code, Section III, Division 1 Subsection NG. The Mark IV baskets do not have any Code requirements.

2.1.1 MCO Shell

The MCO shell is a cylindrical vessel that provides access to its cavity through its top end and receives a shield plug at its top end for closing. The MCO shell has a bottom assembly that provides a permanent sealed closure on the shell bottom end. The MCO bottom assembly is nominally flat and must include an internal liquid collection sump at the MCO centerline. The MCO must be designed with a 1.49 inch nominal distance between the inside of the MCO bottom assembly and the bottom of the lowest basket.

The MCO must permit or allow loading and stacking of the fuel baskets within its cavity. The empty shell must be designed to load into and out of the transport cask.

2.1.2 MCO Shield Plug

The MCO shall be designed with a mechanical closure configuration. The closure shall rely on a mechanical crushable seal to maintain the containment and confinement requirement at the final closure interface. The closure system shall utilize the shield plug/shell interface as the closure boundary where the crushable seal shall be located. The shield plug shall be held in place via a locking ring threaded into the MCO shell. The locking ring shall contain screws that will be tightened to force the shield plug down against the crushable seal while pushing up on the locking ring.

The MCO shall be designed to incorporate a final welded closure cap over the shield plug. The cap shall be welded to the MCO shell. The cap shall be capable/configured for lifting the MCO. The closure cap shall be capable of being fitted with a replaceable rupture disk.

2.1.3 MCO Fuel Baskets

The MCO fuel baskets are categorized into two major configurations: 1) intact fuel element baskets, and, 2) scrap fuel (fragment) baskets. Fuel baskets must also maintain criticality control for the higher enriched (Mark IA) fuel. These basic requirements lead to four different basket types as follows:

- Type (1) must have the ability to hold 48 Mark IA (higher enriched) intact-fuel elements.
- Type (2) must have the ability to hold 54 Mark IV intact-fuel.
- Type (3) will hold Mark IA (higher enriched) scrap fuel (fragments).
- Type (4) will hold Mark IV scrap fuel (fragments).

2.2 Functional Requirements

The mission of the MCO is to confine, contain, and maintain the SNF in a critically safe array to insure the safe operations and support processing of removal from K Basin, Cold Vacuum Drying (CVD) Facility, transport to the Canister Storage Building(CSB), staging (short-term storage) in the CSB, hot conditioning in the Hot Conditioning System (HCS), and interim storage in the CSB. The MCO serves as the SNF processing vessel during both CVD and hot conditioning.

The functions the MCO performs to accomplish this mission are defined below:

- Enable the reracking of fuel elements and fuel fragments/scrap;
- Maintain fuel elements and fuel fragments/scrap in a critically safe condition;
- At various times during its life provide confinement and/or containment for fuel elements and fuel fragments/scrap.
- Relieve excess internal pressure (provide pressure relief);
- Enable the processes to dewater (in preparation for sealing), CVD, and hot conditioning;
- Enable the functions to inert the MCO interior and to purge and vent gasses;
- Shield workers against gamma and neutron radiation traveling through the shield plug from the MCO interior; and
- Enable the handling of all MCO components individually, as well as a fully assembled and loaded MCO.

2.3 Code Applicability

The following sections of the ASME Code apply to the intent of construction of the MCO:

- Section II applies for materials
- Section III for materials, design, fabrication, testing , inspection, and overpressure protection
- Section V for inspection (as prescribed by the Performance Specification)
- Section IX for welder and procedure qualifications.

There are no exceptions taken for Sections II, V, and IX as prescribed by the Performance Specification. All Code Exceptions presented will refer to Section III.

3.0 Code Exceptions

This section contains specific information of where Code exceptions are taken and the reason for the exception. The Code exceptions are provided in Table 3.1

TABLE 3.1
Code Exceptions

Section / Subsection	Article	Paragraph	Section used as guidance (yes / no)	Exception Taken (yes / no)	Exception	Justification
Section III, NCA			no			
Section III, NB	NB-1000		no			
Section III, NB	NB-2000		yes	no		
Section III, NB	NB-3000	3100	yes	no		
		3110	yes	no		
		3120	yes	no		
		3130	yes	no		
		3200	yes	no		
		3210	yes	no		
		3220	yes	no		
		3230	yes	no		
		3300	yes	no		
		3310	yes	no		
		3320	yes	no		
		3330	yes	no		
		3340	yes	no		
		3350	yes	yes	NB-3351 defines weld category according to geometry. These weld types are illustrated in Figure NB-3351.1 of NB-3000. For designs that are restricted to cylindrical vessels with nozzles, weld categories are: NB-3351.1, Category A: All longitudinal welds and welds to spherical sections. Category A joints shall meet the fabrication requirements of NB-4241 and shall be capable of being examined in accordance with NB-5210. NB-3351.2, Category B: All circumferential welds to plates of equal thickness except to spherical sections as defined in category A. The weld angle between plates can not be less than 150 degrees. Category B joints shall meet the fabrication requirementsof NB-4242 and shall be capable of beingexamined in accordancewith NB-5220. Somejoints require cyclic service analysis per NB-3222.4.	Although the MCO is to be designed and fabricated as an NB vessel, it primarily is a spent fuel storage container and not a process pressure vessel or reactor vessel, for which NB was primarily written for. It has been recognized by the NRC for other spent fuel storage vessels that a welded closure provides the best long term assurance for containment of spent fuel, even though the final closure weld can not be made and inspected to the requirements of ASME Section III, Division 1, Subsection NB which they recommend for the rest of the vessel. This appears to be the same approach that the buyer took in putting the initial design together. In 10 CFR 72, what is lost in the lack of a full penetration, fully volumetric inspected weld, is made up for in requiring redundant closure welds. The MCO design does not have redundant closure

Section / Subsection	Article	Paragraph	Section used as guidance (yes / no)	Exception Taken (yes / no)	Exception	Justification
					NB-3351.3, Category C: All circumferential welds between cylinders and flat plates or flanges. Category C joints shall meet the fabrication requirements of NB-4243 and shall be capable of being examined in accordance with NB-5230. NB-3351.4, Category D: All welds between pressure boundaries and nozzles. Due to the geometry of a circumferential butt weld, the classification of the field closure weld is considered to be a category B weld, even though all the requirements for a Category B weld cannot be met. The weld is not a true full penetration weld. The welds used to assemble the rupture disk in the process plug do not meet the requirements of Subsection NB. The weld that seals the rupture disk in place and acts as a pressure boundary is a seal weld and has no structural capabilities or requirements. This is permitted by the Code. The weld that holds the top of the process plug to the bottom is a non pressure boundary weld. It provides structural support to the rupture disk and also transmits the operating torque from the operator to the closure threads. It, being a partial penetration weld, is an exception to the code.	welds. However, it does have redundant seals in the final form. Even though not welded, the mechanical seal plus the welded closure cap make up a redundant seal system. In NRC approved systems, it should be noted that neither one of the redundant seal welds are volumetrically inspected nor hydrostatically tested. The welds used in the installation of the rupture disk are acceptable, since the seal weld is permitted and is required to meet the leaktightness requirements. The weld holding the two parts of the process plug together is a structural weld but not a pressure boundary weld. it is a partial penetration weld, and can not be volumetrically inspected. However, its function is to transmit torque during operation and function as support to the edges of the rupture disk. As shown in Appendix 10, it has very low stresses. It is also inspected with liquid penetrant similar to partial penetrant welds permitted by Subsection NB in other applications.
		3360	yes	yes	NB-3362, Bolted Flange Connections, states: "It is recommended that the dimensional requirements of bolted flange connections to external piping conform	The limited space available at the process piping interface does not permit the use of ANSI fittings. Since the DESH Performance

Section / Subsection	Article	Paragraph	Section used as guidance (yes / no)	Exception Taken (yes / no)	Exception	Justification
					to ANSI B16.5, Steel Pipe Flanges and Flanged Fittings." The MCO process hardware interfaces do not use standard ANSI flanges and fittings. NB-3363 states that access openings may be attached by studs or bolts. The MCO opening is not attached in this way.	Specification does not provide interface loading, it is assumed that the MCO non-standard interface hardware is adequate for the interface loading applied during processing. From the information provided, cover plates are not truly flanges as would be used in a normal pressure system. However, they are analyzed to the ASME Code criteria. The opening is closed with a threaded locking ring holding in a shield plug which has a gasket that is preloaded with jacking bolts. NB-3227.3 implies that such a configuration is permitted by giving special stress limits for the nonintegral closure connections. The MCO design meets this criteria. The system has few cycles, (only once through the hot conditioning) and the components meet the criteria except for a minor localized yielding. The distortion that comes from that yielding is well within the seal's capabilities to maintain containment.
		3400	yes	no		
		3410	yes	no		
		3420	yes	no		
		3430	yes	no		
		3440	yes	no		
		3500	yes	no		
		3510	yes	no		
		3520	yes	no		
		3530	yes	no		
		3540	yes	no		
		3550	yes	no		
		3560	yes	no		
		3570	yes	no		
		3580	yes	no		
		3590	yes	yes	NB-3594.1: Pressure relief valve flanges shall meet interface	The non-standard pressure relief interface dimensions

Section / Subsection	Article	Paragraph	Section used as guidance (yes / no)	Exception Taken (yes / no)	Exception	Justification
					dimensions of ANSI B16.5. The non-Code relief devices use threaded connections with a metal seal.	conform to the DESH requirements. Since there is no pressure relief piping, the interface has no structural requirements other than the loading imposed by the pressure relief device which has been evaluated. The relief valve selected by the buyer is a non-flanged connection, therefore there is no flange interface requirement. The interface is a threaded connection. Threaded connections are permitted by Subsection NB for piping in the sizes indicated and it is not clear that they are permitted for attachments to the vessel as in this case. Straight threads are used in lieu of tapered threads to allow the used of a seal for easy replacement and high assurance of resealing.
		3600	yes	no		
		3610	yes	no		
		3620	yes	no		
		3630	yes	no		
		3640	yes	no		
		3650	yes	no		
		3660	yes	no		
		3670	yes	yes	NB-3671.1 permits flanged joints. NB-3671.7 permits mechanical joints where no standard exists if either tested or designed in accordance with NB-3200.	Although this section of the code pertains to piping components and is not totally applicable to the MCO, it is noted that mechanical joints such as the MCO closure are permitted when designed in accordance with NB-3200.
		3680	no	no		
		3690	no	no		
	NB-4000	4100	yes	no		
		4120	yes	yes	Material and fabrication certification will not be performed by a certificate holder.	Since, as directed by the DESH Performance Specification, the MCO will not be Code stamped, fabricators will not be limited to certificate holder.
		4130	yes	no		
		4200	yes	no		

Section / Subsection	Article	Paragraph	Section used as guidance (yes / no)	Exception Taken (yes / no)	Exception	Justification
		4210	yes	no		
		4220	yes	no		
		4230	yes	no		
		4240	yes	yes	NB-4242 "Category B weld joints in vessels and circumferential weld joints in other components shall be full penetration butt joints, except that piping 2 in. nominal pipe size and smaller may be socket welded. When used, backing strips shall be continuous in cross section. Joints prepared with opposing lips to form an integral backing strip and joints with backing strips which are not later removed are acceptable provided that the requirements of NB-3352.2 are met." The field closure weld for the MCO meets this definition and is fabricated to these requirements. NB-3352.2 evaluation is not performed since there are no cyclic loads applied to the joint.	Since the weld meets the fabrication requirements, this is not a true exception. However, even though the cyclic requirements of NB-3352.2 are met, the inspection requirements for this weld can not be met, and therefore it is an exception. The process plug rupture disk welds do not meet any of the requirements for the weld configurations of this section. The welds are designed with high margins of safety and are inspected in accordance with the requirements of partial penetration welds permitted by this section.
		4250	yes	no		
		4300	yes	no		
		4310	yes	no		
		4320	yes	no		
		4330	yes	no		
		4340	yes	no		
		4350	yes	no		
		4360	yes	no		
		4400	yes	no		
		4410	yes	no		
		4420	yes	yes	NB-4424 (d): NB-4424(d) states: "Concavity on the root side of a single-welded circumferential butt weld is permitted when the resulting thickness meets the requirements of NB-3000." The field closure weld on the MCO can not be inspected to verify this requirement therefore an exception is taken.	Although, this requirement cannot be verified by inspection, the weld design configuration minimizes the concavity potential.
		4430	yes	no		
		4440	yes	no		

Section / Subsection	Article	Paragraph	Section used as guidance (yes / no)	Exception Taken (yes / no)	Exception	Justification
		4450	yes	no		
		4500	yes	no		
		4510	yes	no		
		4520	yes	no		
		4530	yes	no		
		4540	yes	no		
		4600	yes	no		
		4610	yes	no		
		4620	yes	no		
		4630	yes	no		
		4640	yes	no		
		4650	yes	no		
		4660	yes	no		
		4700	yes	no		
		4710	yes	no		
		4720	yes	no		
		4730	yes	no		
	NB-5000	5100	yes	no		
		5110	yes	no		
		5120	yes	no		
		5130	yes	no		
		5140	yes	no		
		5200	yes	no		
		5210	yes	no		
		5220	yes	yes	NB-5221 For Vessel Welded Joints states: "Category B welded joints in vessels shall be examined by radiography and either the liquid penetrant or magnetic particle method." An exception is taken to the Code since the field closure weld on the MCO can not be radiographed due to the lack of accessibility and the radiation field it is in. NB-5222(b) Permits circumferential partial penetration welds in Piping, Pump, and Valves to be examined by liquid penetrant. The weld on the process plug/rupture disk holders is considered like the stem/bonnet of a valve. Therefore liquid penetrant inspection for a partial penetration weld is permitted and no other examination is required.	The weld configuration is in accordance with DESH direction. The magnitude of the stress levels indicate that a fully radiographed weld efficiency of 100% is not necessary. Ultrasonic inspection may be substituted in accordance with NB-5279. The MCO process plug to rupture disk welds are inspected to the conditions of Category B partial penetration welds for valves.
		5230	yes	no		
		5240	yes	no		

Section / Subsection	Article	Paragraph	Section used as guidance (yes / no)	Exception Taken (yes / no)	Exception	Justification
		5260	yes	no		
		5270	yes	yes	NB-5279 gives special exception to joints that cannot be radiographed. Example is given as a closure weld. It permits the use of ultrasonic examination performed in accordance with Section V, along with liquid penetrant inspection. Detailed written procedure must be used which has been proven by actual demonstration to the satisfaction of the Inspector, as capable of detecting and locating defects described in Subsection NB-5330. Since this is a non-stamped vessel, the Inspector would not normally be part of the acceptance process, therefore an exception is taken and the buyer would be required to find a suitable substitute.	The buyer will be providing QA coverage of the procurement of these vessels and will have inspection personnel equivalent to the "Inspector" as used in the Code to perform his function.
		5300	yes	no		
		5310	yes	no		
		5320	yes	no		
		5330	yes	no		
		5340	yes	no		
		5350	yes	no		
		5360	yes	no		
		5370	yes	no		
		5380	yes	no		
		5400	yes	no		
		5410	yes	no		
		5500	yes	no		
		5510	yes	no		
		5520	yes	no		
		5530	yes	no		
	NB-6000	6100	yes	no		
		6110	yes	yes	NB-6111 requires all components to be pressure tested. The cover cap and final closure weld are not pressure tested. "Bolts, studs, nuts, washers, and gaskets are exempt from the pressure test". This allows the use of elastomeric seals for the performance of the pressure test. Since	Final assembly is in the field with spent fuel inside the package. Pressure testing is difficult to perform due to the radiation field. It is not in the best interest of the health and welfare of the workers, or the public, to pressure test loaded canisters.

Section / Subsection	Article	Paragraph	Section used as guidance (yes / no)	Exception Taken (yes / no)	Exception	Justification
					this is not a stamped vessel, the pressure test need not be witnessed by a certified Inspector. The test need not be done by a Certificate holder since there is no requirement for a Certificate.	
		6120	yes	no		
		6200	yes	no		
		6210	yes	no		
		6220	yes	yes	NB-6221 (a) states: "The installed system shall be hydrostatically tested at not less than 1.25 times the lowest Design Pressure of any component within the boundary protected by the overpressure protection devices which satisfy the requirements of NB-7000." The MCO assembly will be hydrostatically tested in the shop prior to fuel loading, but not after loading. The field closure weld and the cover cap will not be hydrostatically tested at any time. No pneumatic testing will be performed either, since the vessel will be loaded with fuel whenever it is fully assembled.	The project position resulting in a final closure weld which cannot be hydrostatically tested was established by DESH. The inability to perform a hydrostatic test on the field closure weld result in a minimal risk, because the calculated pressure stresses in the weld are relatively small.
		6300	yes	yes	Pneumatic testing is not permitted since NB-6112.1 permits pneumatic testing only when the vessel cannot be filled with water. For the shop test, the vessel can be filled with water. For safety reasons the field closure can not be tested either pneumatically or hydrostatically .	See above.
		6310	yes	no		
		6320	yes	no		
		6400	yes	no		
		6600	yes	no		
		6610	yes	no		
		6620	yes	no		

Section / Subsection	Article	Paragraph	Section used as guidance (yes / no)	Exception Taken (yes / no)	Exception	Justification
	NB-7000	7100	yes	no		
		7110	yes	yes	Exact compliance with the general requirements can not be made since no Overpressure Protection Report is provided by the buyer and this is not a ASME Code stamped vessel.	The general intend is met by providing overpressure protection capabilities to the extent specified in the Performance Specification.
		7120	yes	no	Overpressure Protection is required by the use of pressure relief devices and associated pressure sensing devices or a design that does not exceed the Service Limits specified in the Design Specifications for non reactor components. In accordance with the Performance Specification, there is a possibility that the pressure may exceed the Service Limits, thus requiring overpressure protection. The overpressure protection is not combined with any associated pressure sensing device.	The storage system is passive and there is a low probability that any overpressure situation could occur. The release from the overpressure situation would be inside additional confinement such as the CSB tube or process area, therefore there is little need of sensing the pressure within the MCO.
		7130	yes	yes	Although the only relief valve to be provided in the system is to be specified by the Buyer and is a non-Code component, an exception is taken to NB-7131, which requires verification of the operation of reclosing pressure relief devices. No verification system or indicator is build into the system for monitoring.	The relief valve is a non-Code item, per the Performance Specification, and therefore does not have to meet the Code requirements. The type of system, passive storage for the most part, should not generate any significant events that will cause the rupture disks to burst.
		7140	yes	yes	NB-7141 (b) states: "The connection between a system and its pressure relief device shall have a minimum inside diameter equal to or greater than the nominal inside diameter of the pressure relief device inlet. The opening in the connection shall be designed to provide	Sizing of the penetrations and relief device connections, as well as the discharge restrictions, are dictated by the Performance Specification provided by the Buyer. Accumulation information was not provided, therefore sizing to meet

Section / Subsection	Article	Paragraph	Section used as guidance (yes / no)	Exception Taken (yes / no)	Exception	Justification
					direct and unobstructed flow between the system and the pressure relief device." NB-7141 (c) states: "The connection between a system and its safety valve shall be not longer than the face-to-face dimension of the corresponding tee fitting of the same dimension and pressure rating listed in ANSI B16.11. Alternatively, the connection shall not result in accumulative line losses greater than 2% of the relieving pressure." NB-7141 (d) limits total pressure loss to 3% of the relieving pressure, regardless of geometry.	accumulation pressure requirements is not part of this design.
		7150	yes	no		
		7160	yes	no		
		7170	yes	no		
		7200	yes	yes	No Overpressure Protection Report was provided by owner/buyer. Exception to all references and use of information normally provided in the report is taken.	No Overpressure Protection Report was provided by DESH.
		7210	yes	no		
		7220	yes	no		
		7230	yes	no		
		7240	yes	no		
		7250	yes	no		
		7300	yes	no		
		7310	yes	no		
		7320	yes	no		
		7400	yes	no		
		7410	yes	no		
		7420	yes	no		
		7500	yes	no	Relief valve to be used in the system is non-Code and is being specified by the Buyer, therefore this section is not evaluated.	NB-7500 is not applied to the Buyer supplied relief valve, since the Performance Specification makes the relief valve a non-Code item.
		7510	yes	no		
		7520	yes	no		
		7530	yes	no		
		7540	yes	no		
		7600	yes	no		
		7610	yes	yes	NB-7610 (a) states:	The use of rupture

Section / Subsection	Article	Paragraph	Section used as guidance (yes / no)	Exception Taken (yes / no)	Exception	Justification
					"rupture disk devices shall not be used as the sole pressure relief devices:" An exception is taken since the current specification states that the other relief devices are non-ASME Code devices and hence credit for their performance can not be evaluated for in the Code.	disks as the sole pressure relief devices was specified by DESH.
		7620	yes	no		
		7700	yes	no		
		7710	yes	no		
		7720	yes	no		
		7730	yes	no		
		7740	yes	no		
		7800	yes	no		
		7810	yes	no		
		7820	yes	yes	NB-7822 requires the rupture disk holders to be marked in a certain way. Due to the nature of special holders required for the MCO, the full extent of the marking cannot be made.	The fabrication specification requires that components be uniquely marked which will allow for the required tractability.
		7830	yes	no		
Section III, NC			no			
Section III, ND			no			
Section III, NE			no			
Section III, NF	NF-1000		no			
	NF-2000		no			
	NF-3000	all except NF-3320	no			
		3320	yes	no	Note: applies for buckling of support rods and baskets only.	
	NF-4000		no			
	NF-5000		no			
Section III, NG	NG-1000		no			
	NG-2000		yes	yes	Spring pins are to ASME specifications, but not to Section III, Subsection NG-2130.	The spring pin specification (ASME B18.8.2-1994) was "developed under procedures accredited as meeting the criteria for American National Standards", and is "widely used in general industrial applications." For the fuel basket applications, the pin loads are small compared to the ASME allowables, which provides additional

Section / Subsection	Article	Paragraph	Section used as guidance (yes / no)	Exception Taken (yes / no)	Exception	Justification
						assurance that spring pin failures will not occur. The specification for the pin requires material type and shear strength to be certified which are the important parameters. There is no welding of the pins which would require a certified material test report.
	NG-3000		yes	yes	NG-3133.6 requirements are taken exception to, since both the center tube and the basket support rods behave as columns and are evaluated using the requirements of Subsection NF.	For the center pipe, both Subsections NG and NF were considered and met. For the support rods, Subsection NF was required since Subsection NG does not address column buckling.
	NG-4000		yes	yes	Non-stamped component. Therefore, exception to the requirement that fabrication be by a certificate holder is taken (NG-4120).	DESH specified that the baskets were not to be Code stamped.
	NG-5000		yes	no		
Mandatory Appendices	Appendix I		yes			
	Appendix II		no	no		
	Appendix III		yes	no		
	Appendix IV		no	no		
	Appendix V		no	no	Reports not completed and certified.	DESH specified that the components are non-stamped, therefore official documentation sheets are not generated. Documentation of design and fabrication data is generated by other means.
	Appendix VI		yes	no		
	Appendix VII		no	no		
	Appendix XI		no	no		
	Appendix XII		yes	no		
	Appendix XIII		no	no		
	Appendix XIV		no	no		
	Appendix XVIII		yes	o		

Section / Subsection	Article	Paragraph	Section used as guidance (yes / no)	Exception Taken (yes / no)	Exception	Justification
	Appendix XIX		no	no		
	Appendix XX		no	no		
	Appendix XXI		no	no		
	Appendix XXII		no	no		
	Appendix XXIII		yes	yes	Since this is a non-stamped vessel produced by non-certificate holders, the formal qualification of personnel and assigned duties does not exist. This includes all aspects from owner's design specification to the certified data reports.	Alternate QA organization and personnel qualification system is in place that is acceptable to the buyer.

4.0 Conclusion

The ASME Code is used as a guideline for the construction of the MCO. The intent of the Code is to provide the design and construction requirements. The MCO does not require a Code stamp.

MULTI-CANISTER OVERPACK

FABRICATION SPECIFICATION

Contract No. KH-8009

May 1997

Revision 1

ORIGINAL

Parsons Approved:

[illegible] Date: 5/13/97

DOCUMENT REVISION	AFFECTED PAGES	REVISION DESCRIPTION	DATE OF REVISION	REVISION CHECKED BY	REVISION APPROVED BY

Prepared for: Duke Engineering & Services Hanford, Inc.
Prepared by: Parsons Infrastructure and Technology Group, Inc.

TABLE OF CONTENTS

1.0 INTRODUCTION 1
1.1 Project Summary 1
1.2 Description of MCO 1

2.0 SCOPE OF WORK 2
2.1 Work Included 2
2.2 Related Work By Others 3

3.0 TECHNICAL TERMS 3
3.1 Definitions 3
3.2 Abbreviations 4

4.0 SPECIFYING DOCUMENTS 4
4.1 Codes and Standards 4
4.2 Reference Drawings 6
4.3 Reference Specifications 6

5.0 FUNCTIONAL REQUIREMENTS 7
5.1 Dimensional Interfaces and Limitations 7
5.2 Decontamination 7

6.0 MANUFACTURING REQUIREMENTS 8
6.1 General Requirements 8
6.2 Materials 8
6.2.1 ASME Code Materials 9
6.2.2 Other Materials 10
6.3 Fabrication 10
6.3.1 Cutting 10
6.3.2 Forming 10
6.3.3 Machining 11
6.3.4 Fitting and Aligning 11
6.3.5 Piece Part Tolerance 11
6.3.6 Dimensional Verification 11

Table 6.3.6-1
MCO SHELL CRITICAL DIMENSIONS 11

Table 6.3.6-2
PROCESS TUBE CRITICAL DIMENSIONS 12

Table 6.3.6-3
SHIELD PLUG CRITICAL DIMENSIONS 12

ORIGINAL

Table 6.3.6-4
LOCKING & LIFTING RING CRITICAL DIMENSIONS 14

Table 6.3.6-5
CANISTER COVER CRITICAL DIMENSIONS 14

Table 6.3.6-6
MK IA STORAGE BASKET CRITICAL DIMENSIONS 14

Table 6.3.6-7
MK IA SCRAP BASKET CRITICAL DIMENSIONS 15

Table 6.3.6-8
MK IV STORAGE BASKET CRITICAL DIMENSIONS 15

Table 6.3.6-9
MK IV SCRAP BASKET CRITICAL DIMENSIONS 16

6.4 Assembly 16
6.4.1 Assembly Requirements 16
6.4.2 Dimensional Verification 16
6.4.3 Marking (Labeling) of Completed Assemblies 16
6.4.3.1 Shield Plug and Canister Cover 17
6.4.3.2 Canister Shell and Locking Ring 17
6.4.3.3 Storage and Scrap Baskets 17

Table 6.4.3-1
MCO COMPONENT LABELING 18

ORIGINAL

6.5 Welding 18
6.5.1 Welding Processes 19
6.5.2 Welding Procedures and Qualifications 19
6.5.3 Preheat and Interpass Temperatures 20
6.5.4 Workmanship and Visual Quality 20
6.5.5 Non-Destructive Examination 20
6.5.6 Repair by Welding 23
6.6 Cleaning, Coating, and Surface Preparation 24
6.6.1 Cleaning 24

7.0 EXAMINATION AND TESTING REQUIREMENTS 25
7.1 Shop Tests and Examination 25
7.1.1 Ultrasonic Inspection of Plate Used For MCO Shell 25
7.1.2 Ultrasonic Inspection of Forgings 26
7.1.3 Visual Inspections 26

7.2 Helium Leak Tests 27
7.2.1 Helium Leak Test for MCO 27
7.3 Performance Tests 27
7.3.1 Shell - Basket Gauge Test - Test 1 27
7.3.2 Diameter and Length Test - Test 2 27
7.3.3 MCO Basket Gauge Test - Test 3 27
7.3.4 Test 4 28
7.3.4.1 Shield Plug and Process Tube Insertion Test 28
7.3.4.2 Shield Plug Radial Gap Test 28
7.3.4.3 Locking Ring Fitup Test 28
7.3.5 MCO Empty Weight Test - Test 5 28
7.3.6 Final MCO OD and Length Test - Test 6 29
7.4 Pressure Test 29
7.4.1 Pressure Test for MCO Shell Assembly 29
7.5 Internal HEPA Filter Testing 29
7.6 Test Gauge Calibration 29

ORIGINAL

Table 7-1
TEST GAUGES 30

8.0 REQUIRED ACCESSORIES 30

9.0 QUALITY ASSURANCE REQUIREMENTS 31
9.1 Procurement of Materials 31
9.1.1 Procurement of ASME Code Category "SC" Materials 31
9.1.2 Procurement of ASME Code Category "SS" Materials 32
9.1.3 Procurement of Category "GS" Materials 32
9.2 Quality Control 32
9.2.1 Examination Point Program 32
9.2.2 Subcontractor QC Procedures 32
9.2.3 Dimension Control 32
9.2.4 Access to Facilities for QC 33
9.2.5 Access to Facilities for QA 33
9.2.6 Nonconformance 33
9.3 Quality Requirements for Shipping Release 33
9.3.1 Certificate of Compliance 34

Table 9-1
MCO MATERIAL QUALITY CATEGORY DESIGNATION 34

10.0 PACKAGING AND SHIPPING REQUIREMENTS 35
10.1 General Requirements 35
10.1.1 Applicable ASME/ANSI Guidelines 35
10.1.2 Shipping Information 36

10.1.3 Seller Liability For Shipping 36
10.2 Detailed Requirements 36
10.2.1 MCO, Locking Ring, and Shield Plug Preparation for Shipping 36
10.2.2 Packaging, Segregation, and Labeling 36
10.2.3 Small Parts 37
10.2.4 Packaging and Shipping Procedures 37
10.3 Delivery 38

11.0 DOCUMENT AND RECORD SUBMITTAL REQUIREMENTS 38
11.1 Documents 38
11.1.1 Shop Drawings 38
11.1.2 Drawing Standards 39
11.2 Examination and Test Procedures 39
11.3 Records 39
11.3.1 General Requirements for Document Packages 39

Table 11-1
AS-BUILT DIMENSIONS REPORTS 41

Table 11-2
DOCUMENT SUBMITTAL LIST 42

Table 11-3
RECORDS SUBMITTAL LIST 43

APPENDICES
Appendix 1: Intentionally left Blank. A-1
Appendix 2: MCO Internal HEPA Filter Specification (DESH) A-2
Appendix 3: Potential Rupture Disk Suppliers A-3
Appendix 4: Carbone Lorraine A-4
Appendix 5: EG&G Pressure Science A-5
Appendix 6: Johnson Well Wire (Wheelabrator Engineered Systems, Inc.) A-6
Appendix 7: Industrial Screen A-7
Appendix 8: MCO Critical Dimension Sketches A-8

ORIGINAL

1.0 INTRODUCTION

This Specification provides requirements for materials, marking fabrication, welding, examination, shop testing, quality assurance, documentation, packaging, and shipping for the Multi-Canister Overpack (MCO). The MCO consists of the shell assembly, shield plug, locking ring, canister cover and fuel baskets consisting of Mark IA storage, Mark 1A scrap, Mark IV storage and Mark IV scrap. The MCO shell shall be fabricated in accordance with the requirements of the ASME Boiler and Pressure Vessel Code Section III, Division 1, Subsection NB (Class 1 Components) unless noted otherwise by this Specification. The baskets shall be fabricated in accordance with the requirements of the ASME Boiler and Pressure Vessel Code Section III, Subsection NG, unless otherwise noted by this Specification. An ASME certification or N-stamp is not required.

1.1 Project Summary

The MCO provides a containment system for the vertical storage of Single Pass Reactor and N-Reactor Spent Nuclear Fuel (SNF) currently stored in the K Basins located at the Hanford Site. The MCOs will be placed in vertical storage tubes in the Canister Storage Building (CSB) located in the Hanford 200 Area. Individual MCOs and their associated transport equipment are designed for a range of capacities, fuel types, and fuel conditions associated with the subject fuel currently stored in the K East and K West Basins. The MCO is designed to store spent fuel assemblies or lesser quantities of damaged fuel, and fuel fragments.

1.2 Description of MCO

The major components of the MCO are as follows:

A. MCO Shell
B. Bottom Assembly
C. Canister Collar
D. Shield Plug Assembly
E. Locking Ring
F. Canister Cover
G. There are four types of fuel baskets used within the MCO:
   a. Mark IA regular basket
   b. Mark IA scrap basket
   c. Mark IV regular basket
   d. Mark IV scrap basket

ORIGINAL

The cylindrical shell, the bottom assembly, the canister collar, the shield plug, and the locking and lifting ring form the primary pressure retaining containment boundary for the spent nuclear fuel.

The MCO is equipped with a top end shield plug so that the radiation dose is minimized for drying, conditioning, sealing, and handling operations. The shield plug will be a single stainless steel forging. Major welded joints will attach the bottom assembly and canister collar to the MCO shell.

The shield plug will be sealed with a mechanical seal preloaded with the locking ring, and Jacking bolts/screws. The bottom assembly containment boundary welds are made during fabrication of the MCO.

The following items are critical to the MCO and must be carefully controlled and verified during fabrication, shop testing, packaging and shipment:

A. The tolerances on the outer dimensions of the MCO must be maintained to ensure that the MCO can be inserted in the transport cask.

B. The fit up of the MCO top shield plug and locking ring require dimensional controls to allow these components to be placed remotely.

C. This Specification requires a full length gauge verification test for the as-fabricated basket assemblies with respect to the MCO shell. This requires that the dimensions of the MCO shell relative to the basket assemblies envelope be closely controlled during fabrication of the MCO basket assemblies and shell.

D. Basket tolerances must be such that alignment when assembled is easily repeated.

E. Basket tolerances must be such that criticality control is also met.

These requirements are delineated by this Specification and the associated Design Drawings.

2.0 SCOPE OF WORK

This Specification sets forth the requirements for the materials, fabrication, welding, examination, shop testing, quality assurance, documentation, packaging, and shipping of one or more MCOs specified in the purchase order. The MCOs shall be shipped to the location specified in the purchase order.

ORIGINAL

2.1 Work Included

The Work set forth by this Specification shall include the following:

A. The preparation and submittal of a MCO manufacturing plan, schedule, and shop detail and assembly drawings to the Buyer for approval in accordance with the requirements of Section 11 of this Specification.

B. The preparation and submittal of MCO fabrication travelers, material certificates, fabrication procedures, welding procedures, examination procedures and reports, dimensional certificates, and other documentation as defined in Section 11 of this Specification, to verify that the material and completed Work conforms to the requirements of this Specification.

C. The furnishing of materials, fabrication, welding, shop testing, examination, documentation, quality assurance, packaging, and shipping of a complete MCO are as described by the Design Drawings, this Specification, and the Purchase Order. Included in this Work is the gauge to be used for the basket assembly acceptance tests, the mechanical closure thread gauges, the fixture for the pressure test of the shell to bottom forge assembly weld joint, and the accessories listed on the Design Drawings and in Section 8 of this Specification. The fabricator shall be responsible for fabrication design, construction, storage prior to use, and maintenance of any test equipment required by this specification.

2.2 Related Work By Others

The following items related to the MCO system are **not** included and will be furnished by Others:

A. Design of the MCO.

B. Design, fabrication, and delivery of the on-site transport cask and related equipment, including the support skid, trailer, positioning equipment, lifting yoke, remote loading and assembly equipment, and vacuum drying processing system.

3.0 TECHNICAL TERMS

The following definitions and abbreviations shall apply as used within this Specification.

3.1 Definitions

ORIGINAL

The following definitions of terms shall apply throughout this document.

A. **Buyer** is either DE&S (Duke Engineering & Services) Hanford, Inc., and/or Fluor Daniel Hanford, Inc., Richland, Washington.

B. **Seller** is the entity awarded the contract for furnishing the equipment specified herein.

C. **Owner** is the United States Department of Energy (DOE) Richland (Hanford Operations) to which the MCO is shipped.

D. The **Work** is any and all equipment, material, apparatus, item, process, and parts or portions thereof to be supplied by the Seller under the Contract.

E. **Hold Point** is a step in the fabrication/inspection process where the Seller must wait for signed approval of the Buyer to proceed. Hold Points are designated in the specification.

F. **Witness Point** is a step in the fabrication/inspection process where the Seller must contact the Buyer for authorization to proceed. Witness Points are designated in the specification.

G. **First Article of Production** is the first component/subcomponent fabricated, i.e., the first MCO produced. The Seller shall allow the Buyer to inspect each First Article of Production. The Seller must wait for the Buyer's written approval of the First Article of Production before fabricating more components.

3.2 Abbreviations

The abbreviations applicable to this Specification are defined as follows:

AISC	American Institute of Steel Construction, Inc.
ANS	American Nuclear Society
ANSI	American National Standards Institute
ASME	American Society of Mechanical Engineers
ASME Code	ASME Boiler and Pressure Vessel Code
ASNT	American Society of Non-Destructive Testing
ASTM	American Society of Testing and Materials
AWS	American Welding Society
Cask	Hanford On-Site Transport Cask
CFR	Code of Federal Regulations
CMTR	Certified Material Test Report
CSB	Canister Storage Building
DESH	Duke Engineering & Services Hanford
DOE	US Department of Energy
ISO	International Organization for Standardization
NRC	US Nuclear Regulatory Commission
SSPC	Steel Structures Painting Council

4.0 SPECIFYING DOCUMENTS

ORIGINAL

Equipment and/or services for the Work furnished in accordance with this Specification shall comply with all federal laws and with the following codes and standards to the extent referenced herein. Unless otherwise noted, the document with addenda, amendments, and revisions in effect on the date of the purchase order will apply. Later editions may be used if mutually consented to in writing between the Seller and the Buyer. Any conflicting requirements must be submitted to the Buyer in writing for resolution before proceeding with any phase of the Work.

4.1 Codes and Standards

The materials, fabrication, testing, examination, and shipping of the MCO shall be in accordance with the requirements of the following codes and standards. The Codes and Standards are applicable to the extent referenced in this fabrication specification and the associated Design Drawings.

A. ASME Code, Section II, 1995 Edition, with 1995 Addenda.

B. ASME Code, Section III, Division 1, Subsection NB, 1995 Edition, with 1995 Addenda.

C. ASME Code, Section III, Division 1, Subsection NF, 19995 Edition, with 1995 Addenda.

D. ASME Code, Section III, Division 1, Subsection NG, 1995 Edition, with 1995 Addenda.

E. ASME Code, Section V, Nondestructive Examination, 1995 Edition, with 1995 Addenda.

Radiography: Subsection A, Article 2
Subsection B, Article 22

Ultrasonic: Subsection A, Article 5
Subsection B, Article 23

Liquid Penetrant: Subsection A, Article 6
Subsection B, Article 24

ORIGINAL

Visual: Subsection A, Article 9
Subsection B, Article 28

F. ASME Code, Section IX, Welding and Brazing Qualifications, 1995 Edition, with 1995 Addenda, Part QW, Welding Articles 1,2,3, and 4.

G. CFR, Title 10, Part 21, "Reporting of Defects and Noncompliance."

H. CFR, Title 10, Part 71, Subpart H, "Quality Assurance."

I. ANSI N45.2.1, "Cleaning of Fluid Systems and Associated Components During Fabrication Phase of Nuclear Power Plants."

J. ANSI N45.2.2, "Packaging, Shipping, Receiving, Storage and Handling of Items for Nuclear Plants."

K. ANSI Y14.5M, "Dimensioning and Tolerancing-", 1994 Edition.

L. American Society of Non-Destructive Testing, Inc., SNT-TC-1A-92, December 1992 Edition, "Recommended Practice for Non-Destructive Testing Personnel Qualification and Certification."

M. "American National Standard for Radioactive Materials - Leakage Test on Packages for Shipments."

N. AWS D1.1, "Structural Welding Code: Steel."

O. ASTM A380, "Standard Recommended Practice for Cleaning and Descaling Stainless Steel Parts, Equipment and Systems."

P. ASME SA-240, "Heat-Resisting Chromium and Chromium-Nickel Stainless Steel Plate, Sheet, and Strip for Pressure Vessels."

Q. ANSI N45.2.6, "Qualifications of Inspection, Examination, and Testing Personnel for Nuclear Power Plants." (Withdrawn Prior to 12/83. Incorporated with NQA-1-1983.)

R. AWS A2.4, "Weld Symbols."

S. USNRC Regulatory Guide 1.31, "Control of Ferrite Content in Stainless Steel Weld Metal."

T. Fastener/Thread standards as identified on drawings.

U. ASME SA-312/SA-312M, "Seamless and Welded Austenitic Stainless Steel Pipe."

V. ASME SA-182/SA-182M, "Forged or Rolled Alloy Steel Pipe Flanges, Forged Fittings, and Valves and Parts for High-Temperature Service."

W. ASME Y1.1, "Abbreviations - For Use on Drawings and in Text."

X. ANSI/ASME Y14.36, "Surface Texture Symbols."

ORIGINAL

Y. ANSI/ASME B46.1, "Surface Texture (Surface Roughness, Waviness, and Lay)-", 1985 Edition.

Z. Good Painting Practices, Steel Structures Painting Council, Vol. 1, 1993, SSPC-SP1, "Surface Preparation Specification No. 1 Solvent Cleaning."

AA. ANSI N14.6, "Special Lifting Devices for Shipping Containers Weighing 10,000 pounds or more", 1993 edition.

4.2 Reference Drawings

The Design Drawings specified in the Purchase Order are hereinafter referred to as Drawings or Design Drawings, and set forth the extent of the Work to be performed under this contract.

4.3 Reference Specifications

The following reference specifications shall apply to the Work to the extent referenced in this Fabrication Specification and the Design Drawings:

A. Johnson Weld Wire, Johnsons Screens Catalog, Wheelabrator Clean Air Inc., (A Division of Wheelabrator-Frye), Minneapolis, Minnesota.

B. Continental Disc Corporation, Rupture Discs Catalog, Continental Disc Corporation, Liberty, Missouri.

C. Helicoflex seal, Helicoflex Components Division, Columbia, South Carolina.

D. EG&G seals, EG&G Pressure Science, Belesville, Maryland.

E. Relief valves to be specified by buyer.

F. HEPA filters per DESH specification.

G. Industrial Screen Products, Inc.

5.0 FUNCTIONAL REQUIREMENTS

It is critical to the safe, smooth, and proper use of the MCO that the specified dimensional tolerances for the MCO be maintained.

5.1 Dimensional Interfaces and Limitations

The critical dimensions Tables and sketches shown in Appendix 8, define the tolerances for the MCO (NOTE: If sketches, appendix 8 differ from design drawings, buyer will be notified immediately for resolution). It is important that these tolerances be met since the MCO must interface with the transport cask, the spent nuclear fuel assemblies, the K Basin fuel handling equipment, and the CSB. In addition, material thicknesses were established to provide adequate radiation shielding protection and structural margin for maximum design basis conditions. The material thicknesses are critical to final acceptance of the MCO. Where potential thinning of materials may occur during fabrication, the fabricator shall measure and verify thickness to assure that it is within that specified on the Design Drawings. The dimensions and tolerances on the final assembled components after welding and machining are the controlling dimensions. Refer to section 6.3.5 Piece Part Tolerance.

5.2 Decontamination

ORIGINAL

Exterior and the specific weld exterior surfaces of the MCO shall be readily decontaminable. This requires smooth surfaces on all sheet, plate, and welds, with no re-entrant corners. All exposed surfaces shall have a finish which meets or exceeds that specified on the Design Drawings. The MCO shell shall not be bead or sandblasted.

6.0 MANUFACTURING REQUIREMENTS

6.1 General Requirements

The MCO materials, fabrication, welding, and examination shall comply with the requirements of the ASME Boiler and Pressure Vessel Code Section III, Division 1, Subsection NB for the MCO shell, bottom plate, shield plug, locking ring, and rupture disk. The materials and welds for the MKIA steel baskets are required to meet Subsection NG. The materials, fabrication, and examination for items with non-code requirements shall meet the applicable ASTM and AWS requirements specified on the Design Drawings and herein. Refer to table 9-1 for Safety Classification of MCO components.

All Work specified in this Specification, except as specifically noted, is nuclear safety-related and requires the application of the provisions of the Code of Federal Regulations, Title 10, Part 21 (10CFR21), "Reporting of Defects and Noncompliance." It is the responsibility of the Seller to implement the provisions of CFR, Title 10, Part 21, and to pass these requirements on to their subcontractors. All defects shall be reported to Buyer.

The Seller shall accept complete responsibility for all Work performed in compliance with this Specification. Review or approval of data or procedures by the Buyer with regard to work performed to accomplish the requirements of this Specification does not constitute acceptance of any materials or components which will not fulfill the requirements established by this Specification. The requirements of this Specification shall be met.

Alternative fabrication details proposed by the Seller shall be submitted to the Buyer in writing. These shall not be incorporated in Seller's fabrication drawings without written approval from the Buyer.

6.2 Materials

ORIGINAL

Procured materials shall meet the quality assurance requirements detailed in section 9.1 of this specification. All materials used for the fabrication of the MCO shall be in accordance with the Design Drawings. Material purchase specifications shall be prepared and submitted to the Buyer for approval prior to placing the material order. Certified Material Test Reports for all materials of fabrication, including welding materials, shall be provided to the Buyer. The Seller may propose to the buyer for approval to supply alternative materials, components, or parts other than those specified if, in the opinion of the Seller, the substitution is more economical, better qualified to operate under the conditions and performance requirements, and is equivalent to, and in compliance with, the applicable ASME Code requirements. All proposed substitutions shall be clearly defined by the Seller, with a complete description including supporting data establishing equivalence to the specified item. No materials may be substituted or changed without written approval of the Buyer.

6.2.1 ASME Code Materials

All sheet, plate, pipe, forging, and rod materials, as well as all weld consumables shall meet the applicable requirements of Section III, Division 1, Subsection NB, Article NB-2000 or NG-2000, of the ASME Code. The lowest service temperature is 32°F. Certified material test reports shall accompany each lot or heat of the material supplied.

A. Material Identification
All materials shall be marked with the information required by the applicable ASME Section II, Material Specifications and Section III Sub-Articles NB-2150 or NG-2150, as applicable. Marking shall be done by any permanent method that will not result in harmful contamination or sharp discontinuities. Examples of such acceptable methods are etching or photo engraving or other method approved by the Buyer in writing. Marking of all components shall be maintained to provide traceability in the final assembly.

B. Examination and Repair of Material Defects
Examination and repair of the MCO shell materials shall be in accordance with the ASME Code, Section III, Division 1, Sub-Articles NB-2500 and NB-4130. Basket materials shall be examined and repaired in accordance with the ASME Code Section III, Sub-Articles NG-2500 and NG-4130. The requirements of the ASME Code Section II, Material Specification shall apply where they include provisions that are more restrictive than the ASME Code Section III requirements. Where repair of defects which exceed the lesser of ⅜-inch or 10 percent of the section thickness are required, the Buyer shall be notified and no work shall be done until the Seller's written repair procedure has been approved by the Buyer.

ORIGINAL

C. Welding Materials
All welding filler metals and fluxes used in the fabrication and repair of the MCO components shall conform to the requirements of Article NB-2400 of Section III of the ASME Code. Welding filler metals and fluxes used in the fabrication and repair of the steel basket shall conform to the requirement of NG-2400. (Note: Welding materials may be purchased in accordance with the year and addenda of the ASME Code effective at the time the material purchase order is placed.) These filler metals and fluxes shall be tested as specified below. Certified material test reports shall accompany each lot or heat of the material covered.

1. Stainless Steel to Stainless Steel Welds

   a. Stainless steel filler metals shall meet the ferrite requirements of USNRC Regulatory Guide 1.31 and NB-2433. All stainless steel filler metals shall be tested in accordance with NB-2432 "Chemical Analysis Test."

b. Covered stainless steel electrodes for shielded metal arc welding shall conform with the requirements of ASME SFA-5.4, classification E308L-15, E308L-16, E309L-15, or E309L-16.

c. Stainless steel filler metal for gas tungsten arc welding or for gas metal arc welding shall conform with ASME SFA-5.9, classifications ER308L or ER309L.

2. Shielding Gases

All shielding gases shall be welding grade with dew point -60°F or lower.

6.2.2 Other Materials

Piece parts and standard products incorporated into the MCO have been designated on the Design Drawings as ASTM materials or by manufacturer's call-out where applicable. These materials shall be purchased in accordance with the requirements of the applicable ASTM specifications or manufacturers standard specifications. The Seller shall supply Certificates of Conformance attesting that the item meets the applicable specifications.

6.3 Fabrication

All cutting, forming, machining and fitting operations required in the fabrication of the MCO shall be performed in accordance with approved shop drawings, the provisions of this Specification, the requirements of the ASME Code Section III, Article NB-4000 or NG-4000, as applicable, and manufacturer's recommended practices as applicable.

6.3.1 Cutting

ORIGINAL

Preparation for welds shall be by mechanical means where practical. Plasma-arc cut surfaces shall be ground to provide slag-free metal and fitup equivalent to machining. Thermal cutting of austenitic stainless steel shall not be permitted without the Buyer's approval of the process to be used. See Section 6.5.5 for enhanced non-destructive examination requirements for weld end preparation surfaces.

6.3.2 Forming

All plates if used for the MCO shell (in lieu of pipe sections) shall be rolled to final form and shall be accurately cut to size before welding, in accordance with of the ASME Code. Forming and bending shall be in accordance with the requirements of NB-4200 of the ASME Code. Plates shall be formed to true shape with curvature continuous from the edges of the plate; flat spots shall meet the cylindricity tolerances specified on the Design Drawings and in the Codes and Standards. Corrections, if required, shall be made by the pressure process and not by hammer blows.

6.3.3 Machining

Machining of the MCO and components shall be performed using tooling suitable for the task, capable of producing the required dimensional control and surface finishes specified on the Design Drawings.

6.3.4 Fitting and Aligning

Fitting and aligning of all parts is to be performed in accordance with the requirements of NB-4230 or NG-4230, as applicable, of the ASME Code. The accuracy of fitup shall be in compliance with the component tolerances specified on the Design Drawings.

6.3.5 Piece Part Tolerance

Where piece part tolerances are not shown on the Design Drawings, the Seller shall establish piece part tolerances which provide a finished product meeting the overall tolerances specified in section 6.3.6 of this specification. All piece part tolerances shall be stated on the shop drawings.

The Seller may recommend variations in the piece part tolerances established by the Design Drawings, provided a system is established which ensures that the critical dimensions and tolerances listed in section 6.3.6 are maintained.

6.3.6 Dimensional Verification

The Seller shall submit Measurement and Test Reports in accordance with section 11 of this specification which certify that each assembly/component, identified by a unique serial number, is in compliance with its applicable Table 6.3.6 and sketches Appendix 8 (NOTE: If sketches, appendix 8 differ from design drawings, buyer will be notified immediately for resolution).

ORIGINAL

Table 6.3.6-1
MCO SHELL CRITICAL DIMENSIONS

Measurement	Minimum	Maximum	Method
OD and Straightness, canister collar	n/a	25.310"	Insert into a Gage: ID 25.310", Length 10"
External Ovality, to Collar's 45° Shoulder	n/a	24.120"	Pass through a ring gage: ID 24.120", Minimum Length 4.030"
Straightness, to Collar's 45° Shoulder	n/a	24.940"	Insert into a Gage: ID 24.940", Length 149"
ID and Internal Straightness	22.750"	n/a	Pass Through a Gage: OD 22.750", Length 28"
Minimum Wall Thickness	0.425"	n/a	25% Surface Area UT, 100% Weld UT

Measurement	Minimum	Maximum	Method
Process Tube Guide Cone OD above shoulder	2.645"	2.655"	Direct Measurement, after assembly of baseplate, guide and basket support plates
Process Tube Guide Cone Top Surface to the Top Surfaces of the 6 Support Plates	2.525"	2.565"	Direct Measurement, after assembly of baseplate, guide and basket support plates
Process Tube Guide Cone OD concentric with MCO ID	n/a	.015	Direct Measurement
Support Plates Top Surfaces Flatness	n/a	0.020"	Direct Measurement, after assembly of baseplate, guide and basket support plates
Outside Length	157.325"	157.515"	Direct Measurement
Inside Length, Top Surface of Support Plates to the Collar's finished sealing surface	147.930"	148.200"	Direct Measurement
Sealing Surface Flatness	n/a	0.002"	Direct Measurement
Sealing Surface Lay	n/a	Circular	Visual, Relative to MCO Centerline
Sealing Surface Texture	n/a	0.000063"	Projection Method: Four 1.5" Long segments at 90^0 Spacing
ID between Sealing Surface and Buttress Threads	24.035"	24.045"	Direct Measurement
ID above Buttress Threads	24.567"	24.572"	Direct Measurement
Collar Major OD	25.280"	25.310"	Direct Measurement

Table 6.3.6-2
PROCESS TUBE CRITICAL DIMENSIONS

Measurement	Minimum	Maximum	Method
Length	146.930"	146.960"	Direct Measurement
Threaded Length	1.47"	n/a	Direct Measurement
Straightness Over Entire Length	n/a	0.125"	Direct Measurement

Table 6.3.6-3
SHIELD PLUG CRITICAL DIMENSIONS

Measurement	Minimum	Maximum	Method
Shield Plug Thickness prior to assembly with Collar and Filter Guard Plate	10.485"	10.515"	Direct Measurement
Plug Major OD	23.977"	23.983"	Direct Measurement

ORIGINAL

Measurement	Minimum	Maximum	Method
Plug Minor OD (Top)	15.775"	15.785"	Direct Measurement
Plug Minor OD Total Run out with respect to Rotation about the Major Diameter's Axis	n/a	0.005"	Direct Measurement
Plug Minor O.D. Bottom	22.885"	22.915"	Direct Measurement
Vertical Distance Between Top Surface of the Plug and its Locating Diameter	8.545"	8.575"	Direct Measurement
Locating Diameter Flatness	n/a	0.003"	Direct Measurement
Vertical Distance Between Locating Diameter and the Sealing Surface	0.151"	0.155"	Direct Measurement
Sealing Surface Flatness	n/a	0.002"	Direct Measurement
Sealing Surface Texture	n/a	0.000063"	Projection Method: Four 1.5" Long segments at 90^0 Spacing
Sealing Surface Lay	n/a	Circular	Visual, Relative to MCO Centerline
Vertical Distance Between Locating Diameter and the Guard Plate Bottom Surface	7.615"	7.765"	Direct Measurement
Basket Stabilizer ID	2.710"	2.720"	Direct Measurement
Basket Stabilizer Major Cutout Height	3.100"	n/a	Direct Measurement
Perpendicularity between Basket Stabilizer Thread ID and Locating Diameter	n/a	0.010"	Direct Measurement
Vertical Distance Between Locating Diameter and the Basket Stabilizer Thread Relief Top Surface	2.760"	2.785"	Direct Measurement
Port Flange Cutout Flatness (4 Places)	n/a	0.002"	Direct Measurement
Port Flange Cutout Surface Texture	n/a	0.000032"	Projection Method
Port Flange C-seal Recess Depth (4 Places)	0.097"	0.103"	Direct Measurement
Port Flange C-seal Recess Flatness (4 Places)	n/a	0.002"	Direct Measurement
Port Flange C-seal Recess Sealing Surface Texture	n/a	0.000032"	Projection Method

ORIGINAL

Table 6.3.6-4
LOCKING & LIFTING RING CRITICAL DIMENSIONS

Measurement	Minimum	Maximum	Method
Thickness	5.970"	6.030"	Direct Measurement
Center ID	15.900"	15.910"	Direct Measurement
Center Cutout Concentricity with Buttress Thread Axis of Rotation	n/a	0.005"	Direct Measurement
Lifting Ring OD	20.350"	20.410"	Direct Measurement
Lifting Ring ID	18.720"	18.780"	Direct Measurement

Table 6.3.6-5
CANISTER COVER CRITICAL DIMENSIONS

Measurement	Minimum	Maximum	Method
Major Diameter	25.280"	25.310"	Direct Measurement
Thickness	7.970"	8.030"	Direct Measurement (Prior to marking)
Lifting Ring OD	20.350"	20.410"	Direct Measurement
Lifting Ring ID	18.720"	18.780"	Direct Measurement
Bottom Lip Recess Depth	.110"	.150"	Direct Measurement
Bottom Lip Recess OD	24.550"	24.560"	Direct Measurement

ORIGINAL

Table 6.3.6-6
MK IA STORAGE BASKET CRITICAL DIMENSIONS

Measurement	Minimum	Maximum	Method
Stack Height	23.162"	23.182"	*
Baseplate Thickness	1.200"	n/a	Direct Measurement
Baseplate Flatness	n/a	0.010"	**
Envelope Diameter	n/a	22.700"	Pass Through a Gage: ID 22.700",
Fuel Vertical Room	21.5"	n/a	Direct Measurement
Fuel Rack Hole ID x 48	2.570"	n/a	Plug Gage: OD 2.570", Length 2.5"
Coupling OD	2.645"	2.655"	Direct Measurement
Coupling Stab Height	n/a	3.020"	Direct Measurement
Bushing Receiver ID	2.710"	2.720"	Direct Measurement
Bushing Reciever ID Height	3.025	n/a	Direct Measurement

* Direct measurement between a reference plane which the basket is resting on and the top surfaces of the six outside support rods and the top surface of the center post.
** Direct measurements between reference plane which the basket is resting on and the bottom surface of the basket baseplate.

Table 6.3.6-7
MK IA SCRAP BASKET CRITICAL DIMENSIONS

Measurement	Minimum	Maximum	Method
Stack Height	23.162"	23.182"	*
Baseplate Thickness	1.200"	n/a	Direct Measurement
Baseplate Bottom Flatness	n/a	0.010"	**
Envelope Diameter	n/a	22.700"	Pass Through a Gage: ID 22.700", Minimum Length 24"
Coupling OD	2.645"	2.655"	Direct Measurement
Coupling Stab Height	n/a	3.020	Direct Measurement
Bushing, Receiver ID	2.710"	2.720"	Direct Measurement
Bushing, Receiver ID Height	3.025	n/a	Direct Measurement

*Direct measurement between a reference plane which the basket is resting on and the top surfaces of the six outside support rods and the top surface of the center post.
**Direct measurements between a reference plane which the basket is resting on and the bottom surface of the basket baseplate.

ORIGINAL

Table 6.3.6-8
MK IV STORAGE BASKET CRITICAL DIMENSIONS

Measurement	Minimum	Maximum	Method
Side Post Stack Height	27.812"	27.822"	*
Center Post Height	30.387"	30.407"	**
Envelope Diameter	n/a	22.700"	Pass Through a Gage: ID 22.700", Minimum Length 28"
Fuel Vertical Room	26.7"	n/a	Direct Measurement
Fuel Rack Hole ID x 54	2.570"	n/a	Plug Gage: OD 2.570", Length 2.5"
Center Post Coupling OD	2.645"	2.655"	Direct Measurement
Bottom Plate Receiver ID	2.710"	2.720"	Direct Measurement
Bottom Plate Receiver Depth	2.570"	2.590"	Direct Measurement

*Direct measurement between a reference plane which the basket is resting on and the top surfaces of the six outside support rods.
**Direct measurement between a reference plane which the basket is resting on and the top surface of the center post.

Table 6.3.6-9
MK IV SCRAP BASKET CRITICAL DIMENSIONS

Measurement	Minimum	Maximum	Method
Stack Height	27.812"	27.822"	*
Center Post Height	30.387"	30.407"	**
Envelope Diameter	n/a	22.700"	Pass Through a Gage: ID 22.700", Minimum Length 28"
Center Post Coupling OD	2.645"	2.655"	Direct Measurement
Bottom Plate Receiver ID	2.710"	2.720"	Direct Measurement
Bottom Plate Receiver Depth	2.570"	2.590"	Direct Measurement

*Direct measurement between a reference plane which the basket is resting on and the top surface of the outside shell.
**Direct measurement between a reference plane which the basket is resting on and the top surface of the center post.

6.4 Assembly

The Seller shall develop a manufacturing plan which provides sufficient detail to clearly define the proposed assembly sequence including the required cutting, fitting, aligning, and welding steps to ensure that the overall critical tolerances are maintained. The manufacturing plan shall be submitted to the Buyer for approval prior to start of fabrication.

ORIGINAL

6.4.1 Assembly Requirements

The Seller shall establish acceptable tolerance criteria for each sub-assembly, which shall be included on the shop drawings. Tolerances shall be consistent with the overall finished MCO tolerances for size and weight specified on the Design Drawings and this Specification.

Prior to inserting the MCO basket assemblies (for fit-up test or size verification) into the MCO shell assembly, the interior of the MCO shell assembly and the basket assemblies shall be cleaned in accordance with Section 6.6 of this Specification.

6.4.2 Dimensional Verification

The Seller shall submit measurement and test reports in accordance with Section 11 of this specification which certify that each assembly/component, identified by a unique serial number, is in compliance with the dimensions shown in Table 11-1.

6.4.3 Marking (Labeling) of Completed Assemblies

This section lists the requirements for permanent marking of completed MCO assemblies. It does NOT concern temporary markings used to maintain CMTR/heat/lot traceability during shop fabrication of piece-parts.

Completed MCO components shall be sequentially identified with serial numbers per table 6.4.3-1 in order to provide traceability and nuclear material accountability.

6.4.3.1 Shield Plug and Canister Cover

A. Method: Alphanumeric labels shall be formed by bead welding directly to the top of the shield plug and canister cover using 308L weld rod. A method must be developed and used to provide uniform characters. Free hand welding without any guide or visual aid is not acceptable. Weld bead height is not to exceed 1/16". Weld profile shall be smooth with no undercutting or areas that could trap foreign materials. Two samples of welded alphanumeric labels are to be submitted to the Buyer for approval prior to method use. Welds shall be by procedures and personnel qualified in accordance with this specification. Additionally, Rupture disk holder and Process plug shall be mark with a unique serial number traceable to manufacturing documentation.

B. Marking Text Font: The text font shall be an upright, sans-serif, modern type font such as Gothic, Arial, or equivalent. Height-to-width ratio of the letters and numbers in the font may be from 1/1 to 2.2/1. All letters shall be upper case.

C. Marking Text Height: Text height shall be a minimum of ⅝".

ORIGINAL

6.4.3.2 Canister Shell and Locking Ring

A. Method: Components shall be impression stamped using blunt-nosed continuous dies, or blunt-nosed interrupted dot die stamps.

B. Marking Text Font: The text font shall be an upright, sans-serif, modern type font such as Gothic, Aerial, or equivalent. Height-to-width ratio of the letters and numbers in the font may be from 1/1 to 2.2/1. All letters shall be upper case.

C. Marking Text Height: Text height shall be a minimum of ⅝".

D. Marking Die Stamp: die stamps shall be low-stress type stamps. The tip radius of the dies for ¼" character size letters shall be 0.010" minimum. Die stamp marking shall be applied to a visible, low stress location. The material thickness of the item to be marked shall not be reduced by die stamping to less than the minimum specified on the component drawing. The impression depth shall not exceed 0.010".

6.4.3.3 Storage and Scrap Baskets

A. Method: Baskets shall be electrochemically etched. The depth of etching shall not exceed 0.003". The electrolyte and neutralizer used for electrochemical etching shall be compatible with the material to be marked.

B. Marking Text Font: The text font shall be an upright, sans-serif, modern type font such as Gothic, Arial, or equivalent. Height-to-width ratio of the letters and numbers in the font may be from 1/1 to 2.2/1. All letters shall be upper case.

C. Marking Text Height: Text height shall be 2".

Table 6.4.3-1
MCO COMPONENT LABELING

COMPONENTS	SERIAL NUMBER (First Item)	LOCATION AND ORIENTATION ON THE COMPONENT
Shield Plug	S-001	Top surface, between process ports
Canister Shell	H-001 (this is the MCO # used for tracking)	OD surface of collar, approx. 1" from top edge, and near one of the buttress thread starts.
Locking & Lifting Ring	R-001	Approx. centered on the top surface of the lifting lip.
Canister Cover	C-001	Approx. centered on the top surface.
Mark IA Storage Basket	IA-0001	OD surface of the shroud, approx. 3" from top edge.
Mark IA Scrap Basket	IAS-0001	OD surface of the shroud, approx. 3" from top edge.
Mark IV Storage Basket	IV-0001	OD surface of the shroud, approx. 3" below seal.
Mark IV Scrap Basket	IVS-0001	OD surface of the shroud, approx. 3" below seal.

6.5 Welding

ORIGINAL

All welding shall conform to the requirements of Articles NB-4000 or NG-4000 as applicable for Class 1 plate and shell type supports, as applicable, of the ASME Code, Section III and this Specification, unless noted otherwise on the Design Drawings.

All welding shall be performed by welders and welding operators qualified in accordance with NB-4300 or NG-4300, as applicable. Copies of the welder's qualifications shall be submitted at the same time that each welding procedure is submitted to the Buyer for approval.

The use of temporary welded attachments during fabrication shall be avoided as much as possible. After fabrication is complete, temporary welded attachments and arc strikes shall be removed flush with the base material without encroaching on the specified minimum thickness. All areas from which temporary attachments have been removed shall be examined by the Liquid Penetrant method after the surface has been restored.

Each piece (shell, collar, base plate, etc) is to be uniquely identified. The Seller shall establish a weld map, material map, and radiographic map for each MCO. The maps shall provide traceability of all materials to heat (lot) numbers throughout the fabrication sequence and final assembly. Each weld shall identify the welder, weld material by heat (lot) number and be traceable to applicable NDE reports. These maps shall be included in the final document package. Identification for traceability of MCO components is required. Vibra-etching, laser marking, or photo engraving is recommended for identification. **High stress die stamping and pin stamping are not permitted** (see section 6.4.3.2).

6.5.1 Welding Processes

Only the following welding processes with the restrictions listed are permitted:

A. Manual Shielded Metal-Arc
Electrodes conforming to the requirements of Section 6.2.1 Paragraph C.1 shall be used for joining stainless steel to stainless steel. Covered electrodes shall be stored and handled as recommended by the electrode manufacturer and in accordance with the applicable code requirements.

B. Gas Tungsten Arc
An inert gas backing purge must be used for the first 3/16 inch of deposited weld metal thickness for full penetration butt welds. Filler metal conforming to the requirements of Section 6.2.1 Paragraph C.1 shall be used for joints in stainless steel.

C. Gas Metal Arc
This process, except for the short circuiting arc mode, may be used for any stainless steel weld joint. The short circuiting arc mode is prohibited for all construction covered by this Specification. Filler metals for welding stainless steel shall conform to the requirements of Section 6.2.1 Paragraph C.1.

6.5.2 Welding Procedures and Qualifications

ORIGINAL

The Seller shall prepare written Welding Procedure Specifications (WPS). Each WPS shall be prepared and qualified in accordance with the requirements of ASME Section IX, ASME Section III, Subsections NB and NG, and this Specification. WPS and Procedure Qualification Records (PQR) shall be in the form of clear, sharp, reproducible prints and shall be submitted on forms QW-482 and QW-483 as shown in the ASME Code, Section IX or similar forms or formats.

Approved WPS identifications and designations shall be shown on the Seller's shop drawings for each weld. Thirty days prior to the start of fabrication, the Seller shall submit to the Buyer, one copy of WPS and corresponding PQRs. The welding and quality control procedures shall include the limitation that no welder shall have in his possession more than one type of filler metal at any one time; except that a welder may have both bare wire and covered electrodes that deposit weld metal of the same A-number class. A technique shall be used to avoid weld splatter.

6.5.3 Preheat and Interpass Temperatures

A. The maximum preheat and interpass temperature for welding austenitic stainless steel materials shall be 350°F. The minimum preheat and Interpass temperature is 50°F.

B. Preheat and Interpass temperature shall be determined by temperature indicating crayons, contact pyrometers, or other suitable means accepted by the Buyer. Temperature indicating crayons shall not be used on austenitic stainless steel, except for weld interpass temperature measurements, in which case all crayon markings shall be removed by using acetone or isopropyl alcohol prior to any heat treatment.

C. Interpass temperature requirements listed above shall also apply to tack welding, fillet welds, attachment welds, and thermal gouging and cutting.

6.5.4 Workmanship and Visual Quality

A. Each weld shall be essentially uniform in width and size throughout its full length. Each layer of welding shall be visually free of slag, inclusions, cracks, porosity, and lack of fusion.

B. Fillet welds shall be of the specified size with full throat thickness as required. Excessive convexity or concavity shall be avoided. Fillet welds shall always develop the minimum size required by the Design Drawing, but may vary in size above the minimum as long as a reasonably uniform appearance is maintained.

C. Elimination of defects and surface preparation of welds by chipping, grinding or gouging shall be done in such a manner as not to gouge, groove, or reduce the adjacent base-material thickness below the specified thickness. The Buyer approved repair procedures and verification reports shall be used for the Work.

D. Precautions should be taken to avoid weld splatter and arc strikes. If these occur, they shall be removed by procedures approved by the Buyer.

E. Peening shall not be used without prior written acceptance of the method and controls to be used. The use of pneumatic tools for slag removal is not considered peening, and is acceptable. Peening of root and cover passes is not acceptable.

F. Welds shall be ground flush within +1/32", -0" from the high side of the weld. Weld caps on all seams shall be a maximum of .03" high. If grinding is required to maintain the maximum weld height, the finish shall be equivalent to 80 grit.

6.5.5 Non-Destructive Examination

ORIGINAL

A. General

All machined surfaces shall be examined at completion of machining. Except as specified herein, all welds shall be non-destructively examined in accordance with the requirements

of NB-5000 or NG-5000, as applicable, of the ASME Code, Section III. Personnel performing non-destructive examination shall be qualified in accordance with NB-5520 or NG-5520, as applicable, SNT-TC-1A, and their qualification records shall be available at the point of work. Only individuals qualified for NDT Level I, NDT Level II, or NDT Level III may perform non-destructive testing. Level I personnel shall not interpret the results of an examination or make determination of the acceptability of an examined part. Copies of the NDE personnel qualifications shall be submitted at the same time that each NDE procedure is submitted to the Buyer for approval.

The Seller shall prepare written NDE procedures which shall be submitted to the Buyer for approval. The Seller shall also submit a sample radiograph to the Buyer for approval.

The acceptance standards shall conform to the requirements of NB-5300 or NG-5300, as applicable, of the ASME Code, Section III, Division 1. Unacceptable welds shall be repaired in accordance with NB-4400 or NG-4400, as applicable, of the ASME Code, Section III, Division 1 and re-examined by the same method that detected the flaw.

B. Radiography (RT)

All welds designated on the Design Drawings to be radiographically examined shall be examined in accordance with the requirements of Section V, Article 2 of the ASME Code. The ASME Section III penetrameter chart shall be used for radiographic examination. Radiographic acceptance standards shall be as stated in NB-5320 of the ASME Code, Section III with the following additional comments:

1. Surface pinholes shall be removed by grinding and need not be repaired by welding, providing the minimum specified thickness is maintained and the depression is faired into the surrounding weld.

2. The radiographic film shall be fine grain, high contrast, at least equivalent to Eastman Kodak AA. Lead intensifying screens shall be used. The minimum film density shall be 2.0 for single viewing, and 2.6 for double composite film viewing. For the latter, the minimum density on a single film shall not be less than 1.3. The maximum film density for both shall be 4.0. The film shall be double loaded cassettes with both films submitted to the Buyer for review.

3. A written record shall be prepared for each weld radiographically examined. As a minimum the written record shall include: identification of part, joint thickness, material, examined area, the radiographic technique covering all essential variables, a shooting sketch showing the identification and location of the film and placement of the radioactive source, lead markers, pentameter used and which datum was visible, name and certification level of radiographer interpreting the film and the findings or disposition if any. The film negative plus any film negative from repaired areas made both before and after repair work shall be included.

ORIGINAL

4. The Seller must use a calibrated densitometer when verifying the density of a radiograph. Comparator strips are not acceptable. Individual radiographs must be uniquely identified in order to correlate the radiographs with specific welds, weld locations and reader sheets for each canister.

5. The results of the radiographic inspections shall be made part of the document package. Radiographic films shall become the property of the Buyer after the contract is closed.

C. Liquid Penetrant (PT)

All welds designated on the Drawings to be examined by liquid penetrant examination shall be examined in accordance with the requirements of Section V, Article 6 of the ASME Code. For buttwelds requiring radiography, the buttweld end preparation surfaces for plate and forgings shall be examined by the liquid penetrant method. This requirement applies to all thicknesses of these product forms. The minimum acceptance standards for liquid penetrant examination shall be as specified in Section III, Division 1, Sub-Article NB-5350 or NG-5350, as applicable, of the ASME Code.

1. Liquid penetrant testing shall be by the solvent removal method. The penetration time shall be at least 5 minutes, but at no time shall the penetrant be allowed to dry or harden on the examined surfaces. The developer drying time shall be made no sooner than seven minutes nor later than 30 minutes after the developer has dried. Prior to the application of developer, the surface shall be wiped clean using solvent-damp lint-free cloth or paper towels. Flooding with liquid solvent is prohibited.

2. Penetrant testing materials (i.e., penetrant, cleaners, developers, etc.) used for examination of austenitic stainless steels and nickel-base alloys shall not cause corrosive or other harmful effects and shall not contain more than the amount of contaminant specified in Section V of the ASME Code. The penetrant materials shall be thoroughly removed immediately after the examination has been completed, followed by a swabbing or flushing of the area with demineralized water, acetone, or isopropyl alcohol.

3. A written report of each weld examined by liquid penetration shall be prepared. At a minimum, the written record shall include: Identification of part, material and/or area, name and level of examiner, and the findings or dispositions, if any.

D. Ultrasonic (UT)

All welds designated on the Design Drawings to be ultrasonically examined shall be examined in accordance with the requirements of Section V, Article 5 of the ASME Code. The minimum acceptance standards for UT examined welds shall be as specified in Section III, Division 1, Sub-Article NB-5330 or NG-5330, as applicable, of the ASME Code.

ORIGINAL

1. Calibration holes or notches shall not be machined in the article to be examined. Calibration blocks of ultrasonically identical material with thickness no less than 90% and no more than 110% of the part to be examined shall be used.

2. Couplants used for ultrasonic examination of austenitic stainless steels and nickel-base alloys shall not cause corrosive or other harmful effects.

3. Couplants shall be removed after completion of the examination using materials and procedures approved by the Buyer.

4. A written report of each weld examined by ultrasonic methods shall be prepared. At a minimum, the written report shall include: identification of part, material and/or area, name and level of examiner, calibration block used, dB settings for searching and reporting frequency, couplant, transducer size, shape, type, and model, and the findings or dispositions, if any.

5. Calibration shall consist of 80% full-screen height signal from the 1/4t hole or notch. The Distance amplitude correction (DAC) shall plot ¼t, ½t, and ¾t reflectors. Electronic DAC evaluators are acceptable. All signals over 50% DAC are reportable, all signals over 100% DAC are rejectable, unless judged by a Level III examiner to be caused by geometry or other non-harmful phenomena.

E. Visual Examination (VT)
All welds shall be visually examined in accordance with the requirements of paragraph NB-4424 or NG-4424, as applicable of Section III, and Article 9, Section V of the ASME Code. Only visual examiners qualified and certified in accordance with Seller's approved Quality Assurance Program may perform visual examination under this specification.

6.5.6 Repair by Welding

ORIGINAL

A. Weld Repair of Defects in Base Material:
Defects in plates, shapes, and bars shall be as specified in Section 6.2.1.B of this Specification.

B. Repair of Defects in Completed Welds:
Unacceptable weld defects shall be eliminated and repaired in accordance with Section III, Sub-Article NB-4450 or NG-4450, as applicable, of the ASME Code and visually re-examined prior to proceeding to any additional examinations required by this Specification. Repair welding shall be performed employing welding procedures and welders qualified in accordance with Section IX of the ASME Code. All repairs to completed welds are to be documented on an NDE/Weld History record which shall include the type and location of defect repaired, subsequent heat treatment, if performed, and the results of re-examination(s) performed after repair. In process repairs requiring removal of weld pass(es) must be documented even if they are considered "in progress".

6.6 Cleaning, Coating, and Surface Preparation

Cleaning and surface preparation for the MCO and its sub-assemblies shall be as specified on the Design Drawings and the following:

6.6.1 Cleaning

A. All metal surfaces shall have a surface cleanliness classification C or better as defined in ASME NQA-1-1994 Edition, Subpart 2.1.

B. All welding by-products such as slag, splatter, or smoke stains shall be removed.

C. The use of any mechanical method which produces excessive roughness, or cleaning agents which may have corrosive effects or affect the performance of the material is prohibited.

D. No materials or methods used during fabrication, testing, examination, or cleaning shall contain appreciable amounts of halogens or other deleterious materials.

E. Written procedures prepared in accordance with ANSI N45.2.1, Section 2.2 for cleaning, examination, and testing of cleanness shall be submitted to the Buyer for approval. The Seller shall use ASTM A-380 as a guide for preparing the procedures.

F. Prior to welding, all components shall be degreased using a cleaning agent that does not contain more than 250 ppm halogens. No markings made with markers shall remain. The cleaning technique shall be included in the cleaning procedure.

G. The inside and outside surfaces of the finished MCO shall be free from all mill scale, machining chips, grease, oil, weld splatter, arc strikes, or other foreign matter. It is essential that the MCO vessel, shield plug flow passages, process tube, strainer, and HEPA filter not contain foreign materials.

H. During fabrication, contact with CLEAN carbon steel bed plates, cutting tables, lathes, boring mills, tooling, handling equipment, testing equipment etc. is permitted. Any of the above carbon steel surfaces shall be clean of any loose scale, rust, or steel particles that could become embedded in stainless steel.

I. All grinding wheels shall be made of aluminum oxide, all wire brushes shall be Type 300 stainless steel, and both shall be used only on stainless steel material. MCO material shall be isolated from grinding or welding of carbon steels to avoid contamination.

J. Cutting oils, lubricants, inks, labels or other means of marking fabrication progress, and all other materials/chemicals used during the fabrication and inspection (such as liquid penetrant dye and developer, ultrasonic testing couplants, etc) shall have a maximum halogen content of 250 ppm. Certifications of halogen content shall be available for Buyer review.

ORIGINAL

7.0 EXAMINATION AND TESTING REQUIREMENTS

The MCO shall undergo the shop tests, examinations, performance tests, leak tests and pressure test described herein. The purpose of these tests and examinations is to ensure the quality of workmanship and to guarantee that the MCO meets the functional requirements specified herein. Detailed test procedures, acceptance criteria, and a test schedule shall be provided by the Seller for the Buyer's approval. The Seller shall furnish all shop examination and test facilities, materials, and labor necessary for performance of tests and examinations, or for any modifications resulting from the tests or examinations. The Seller shall repair or replace all or any parts of the Work not in compliance with this Specification as determined by such examinations and tests.

The Buyer shall be notified in writing at least two weeks in advance of designated hold points or witness points. In addition, three days prior to these hold or witness points, the seller shall notify the Buyer by telephone. Hold or witness points may not be waived without specific written consent of the Buyer.

7.1 Shop Tests and Examination

The Seller shall submit to the Buyer documentation identifying the Seller's QA examination and test, witness and hold points which will occur during the manufacturing, assembly, and testing activities for the MCO. This list will be used to designate the Buyer surveillance hold and witness points.

The Buyer reserves the right to make arrangements with a qualified examination firm, or provide his own representative, to be present during the required hold or witness point activities. The presence of a representative from such a firm or the Buyer's representative does not relieve the Seller from performing his required in-house quality control functions. The Seller is responsible for first line examination and verification of items and services within the contractual scope of work. The Seller shall furnish the representative all necessary documents and records to perform the required surveillance during hold and witness point activities.

ORIGINAL

The Buyer will review the work to ensure that all items have been fabricated and tested in accordance with the Specification. All material used in the MCO shell assembly, shield plug, locking ring, and canister cover shall meet the requirements of Section III, Subsection NB-2000. All material used in the fabrication of Mark IA baskets shall meet the requirements of Section III, Subsection NB.

7.1.1 Ultrasonic Inspection of Plate Used For MCO Shell

The Seller shall develop and perform a procedure for ultrasonic testing of the plate material that is used to fabricate the pressure boundary shell of the MCO. This plate material shall be ultrasonically inspected for minimum acceptable thickness, laminations, and indications in accordance with ASME Section V, Article 23, SE-797, SA-578, and supplementary requirements S3 and S4.

Scanning shall be along continuous parallel paths, parallel to the major plate axis, on 3 inch or smaller centers. This inspection shall be performed on the MCO shell after rolling and welding operations are performed. (Note: See section on welding for additional inspection requirements on welds).

Circumferential measurements shall be measured clockwise (while looking down on the MCO, and zero inches being the centerline of the longitudinal weld seam). Longitudinal measurements shall be measured from bottom to top of the MCO shell (zero inches being the bottom of the shell).

The ultrasonic inspection documentation data shall be in tabular format. The table shall indicate where each measurement was taken. An example of the tabular format shall be submitted by the Seller to the Buyer for approval prior to any measurements-of-record. The results of all UT inspections shall be made part of the final document package.

7.1.2 Ultrasonic Inspection of Forgings

The Seller shall develop and perform a procedure for ultrasonic testing of the forged components (base plate, shield plug, locking ring, and canister cover) that are used to fabricate the MCO. The forged components shall be ultrasonically inspected for minimum acceptable thickness, laminations, and indications in accordance with ASME Section V, Article 23, SE-797, SA-578, and supplementary requirements S3 and S4. (Alternatively, ASME Section III, Subsection 2542 Ultrasonic Examination of Forgings may be used). Ultrasonic testing of the forged component metal shall be performed after completion of all forging, heat treating, and initial profile machining. Note: It is permissible to perform the ultrasonic inspection before completion of final machining to finished dimensions to confirm material integrity only. Scanning shall be along continuous parallel paths on 3-inch or smaller centers. At a minimum, the scanning with normal beam method shall be performed in two directions (parallel and perpendicular to the major axis of the component). The Seller may, if desired, supplement the normal beam UT scans with angle beam scans. The ultrasonic inspection documentation data shall be in tabular format. The table shall indicate where each measurement was taken. An example of the tabular format shall be submitted by the Seller to the Buyer for approval prior to any measurements-of-record. The results of all UT inspections shall be made part of the final document package.

7.1.3 Visual Inspections

ORIGINAL

The Seller shall develop and implement a procedure to visually inspect all components of the MCO.

The Seller's procedure is to pay special attention to the threads and sealing surfaces (buttress threads on the locking ring and vessel collar, sealing surfaces of the flange covers, shield plug process ports, shield plug seal area, etc.). Inspection of mill finished, ground, or machined surface finishes shall be in accordance with an approved comparison sample/standard, and shall confirm that design drawing requirements are met.

Where visual inspection of the sealing surfaces reveals any scratches, the component shall be declared nonconforming. The part shall be dispositioned for rework or rejection. The Seller is to maintain a log of all visual inspections.

DB 5/14/97

7.2 Helium Leak Tests

7.2.1 Helium Leak Test for MCO

Upon completion of the MCO shell, the MCO shall be helium mass spectrometer leak tested in accordance with ANSI N14.5 meeting the fabrication test requirements and ASME Code, Section V, Article 10, Hood Method (hood to be covering the top of the installed shield plug, locking ring, and process port flange covers). The leak test shall include the metal seals for the first unit of each production run. Units following the first unit may be tested with elastomeric seals or equivalent that will not damage the seal surface for production use of the metal seals in the field assembly. Each MCO is to be tested at a minimum differential pressure of 15 psi using helium gas at a 99.9% minimum purity. The maximum acceptable leakage is $1x10^{-7}$ std. cm^3/sec. The leak test shall be performed after the pressure test (Section 7.4.1).

The Seller shall provide the Buyer with written procedures for the leak test for approval prior to the start of testing. The results of each leak test shall be supplied to the Buyer.

7.3 Performance Tests

The Seller shall complete the following functional performance tests for the MCO:

7.3.1 Shell - Basket Gauge Test - Test 1

Following fabrication of the shell, the Seller shall perform a gauge test using the fuel assembly basket insertion gauge indicated in Section 7.6. The test shall consist of passing the gauge through the entire length of the MCO shell interior with a resistance force of 50 pounds or less to verify the clear opening of the MCO shell. Lubrication of the gauge or other methods of reducing friction are not allowed. The Seller shall fabricate the gauge and provide written certification that it meets the specified dimensional requirements.

7.3.2 Diameter and Length Test - Test 2

ORIGINAL

Following fabrication of the MCO shell assembly, the Seller shall perform a test to dimensionally verify that the outside diameter and length are within the specified acceptance limits.

The MCO outside dimensions shall be verified to ensure that the MCO does not exceed the maximum envelope dimensions specified on the drawings. This check may be made by optical survey means, or by the construction and use of an accurate full length gauge.

7.3.3 MCO Basket Gauge Test - Test 3

Following complete assembly of the MCO, and with the MCO oriented in the vertical position, the Seller shall repeat Test 1 to demonstrate that the fuel assembly basket insertion gauge can be passed through the entire interior cavity length of the MCO, with a resistance force of 50 pounds or less.

BB 5/18/

This will also demonstrate that the as-built MCO, complies with the dimensional requirements of this Fabrication Specification. The measured resistance force to achieve passage of the gauge shall be recorded and included in the MCO test report. The performance of this test shall be designated as a fabrication hold point in the Seller's manufacturing plan.

7.3.4 Test 4

7.3.4.1 Shield Plug and Process Tube Insertion Test

Following completion of the MCO fabrication, the Seller shall perform a test to verify fitup of the shield plug. With the MCO oriented in the vertical position and the shield plug suspended at its center grapple point, the shield plug and long Process Tube shall be oriented as required, and lowered into place inside the MCO shell. No mechanical assistance or lubricating materials are permitted. At the Buyer's option, this shield plug placement test shall be repeated if difficulty in placement of the shield plug is encountered.

7.3.4.2 Shield Plug Radial Gap Test

Following placement of the shield plug within the MCO shell assembly, the fit of the shield plug shall be verified by testing the minimum and maximum radial gap between the shield plug and the MCO shell assembly as shown on the Design Drawings. The minimum gap shall be zero. The maximum gap shall be 1/16" at any location. Any locations which cannot meet the minimum or maximum gap gauge test shall be brought into conformance by the Seller and the test indicated in 7.3.4.1 repeated. The performance of this test shall be designated as a fabrication hold point in the Seller's manufacturing plan.

7.3.4.3 Locking Ring Fitup Test

The completed MCO shall be fully assembled to verify fit up of shield plug, process ports, locking ring, bolts, etc. Metal seals shall not be installed during test. Care shall be taken not to damage seal surfaces.

7.3.5 MCO Empty Weight Test - Test 5

ORIGINAL

Following completion of the MCO fabrication, the Seller shall weigh the MCO components and record the weights. The dry weight of the following components shall be supplied to the Buyer.

- Fully assembled MCO less the shield plug.
- Shield Plug assembly.
- Locking Ring
- Canister Cover
- Process Tube

CG 5/19/97

Prior to performing the MCO weight tests, the calibration of the weighing device shall be verified. Calibration records for the weighing device shall be made available to the Buyer.

7.3.6 Final MCO OD and Length Test - Test 6

Following completion of MCO fabrication, the Seller shall repeat Diameter and Length Test to verify the inside length, and outside dimensions of the MCO. The performance of this test shall be designated as a fabrication hold point in the Seller's manufacturing plan.

7.4 Pressure Test

7.4.1 Pressure Test for MCO Shell Assembly

Upon completion of the MCO, the assembly shall be tested in accordance with either Sub-Article NB-6200 Hydrostatic Tests or Sub-Article NB-6300 Pneumatic Tests of ASME Section III. The test shall be performed by internally pressurizing the MCO shell cavity to a test pressure of not less than 187.5 psig (i.e., 1.25 x Design Pressure) for a hydrostatic test, or not less than 180 psig (i.e., 1.2 x Design Pressure) for a pneumatic test. Elastomeric seals may be used instead of metallic seals

The Seller shall provide the Buyer with written procedures for the pressure test for approval prior to the start of fabrication. A written report documenting the results of the pressure test shall be supplied to the Buyer. The performance of this test shall be designated as a fabrication hold point in the Seller's manufacturing plan.

7.5 Internal HEPA Filter Testing

Perform a filter aerosol challenge to test the integrity of the filter manifold welds, filters, and flow path after the filter/manifold and protective cover plate installation on the shield plug. The final aerosol challenge tests shall be conducted in accordance with ASME N510-1989 "Testing of Nuclear Air Treatment Systems." Pretests may be performed prior to guard plate installation to permit weld repairs. The filter shall be cleaned with alcohol or other aerosol cleaning agent after each test. The documented filtering efficiency of the each shield plug and filter system shall be 99.97% DOP equivalent or better with an air flow rate of 35 ACFM. Test instrumentation shall be NIST traceable. Test report documentation of the final test (after protective shield plug guard plate installation) shall accompany each shield plug assembly and shall include, at a minimum, the specific shield plug part number, air flow rates, differential pressure across the assembly, test instrumentation NIST identification and calibration expiration dates, and the aerosol percent penetration of the shield plug assembly.

7.6 Test Gauge Calibration

ORIGINAL

The test gauges shall be calibrated in accordance with the Seller's calibration procedures before and after each test.

5/13/97

Table 7-1
TEST GAUGES

Name	Outside Diameter	Inside Diameter	Length
MCO External 1*	n/a	25.310"	158"
MCO External 2*	n/a	24.120"	4.03"
MCO External 3*	n/a	24.940"	149"
MCO Internal**	22.750"	n/a	28"
Basket Envelope	n/a	22.700"	28"
Fuel Rack Hole	2.570"	n/a	2.5"

*MCO external test gages may be integrated into a single gage at the manufactures discretion, with the buyer's approval of the gage design.
**Gage Outside diameter is 0.050" larger than Basket Envelope gage inside diameter to ensure adequate clearance between actual baskets and the MCO interior shell.

Notes:

1. Gauges may be fabricated from steel plate or a rolled section. The minimum wall thickness of the gauges is 0.25 inches.
2. It is assumed that machining of the gauges will be required to achieve adequate dimensional control.
3. Sufficient care shall be taken to safeguard the gauges from damage when not it use. The gauges shall be dimensionally verified prior to each use. The gauges shall become the property of the Buyer at completion of the purchase contract.
4. If other than 304L (including 304 tools) stainless steel gages are used, all contact surfaces with the MCO components shall require cleaning and inspection to verify no contamination.
5. All listed dimensions of the gages are listed at the project's reference temperature, 72^0F.
6. If other than 304L stainless steel gages are used, then the test procedure must record and compensate for testing temperatures.

8.0 REQUIRED ACCESSORIES

ORIGINAL

The bills of materials provided on the Design Drawings include a small number of items which are accessories for the MCO. Small parts shall be individually bagged in clear plastic. All accessories shall be identified by a metal tag securely attached to each part, or bag, and shall include the following information:

A. Purchase Order number and Serial number (or Lot number). The serial number or lot number shall be traceable through the accompanying data package to a heat number where applicable.

B. Specific accessory part name, vendor, and part number.

C. Drawing reference, revision number, and part item number.

9.0 QUALITY ASSURANCE REQUIREMENTS

The Seller is required to have an acceptable Quality Assurance Program which shall be in effect throughout the fabrication, assembly, and testing of the MCO. This program shall be in accordance with section 3.6.2 of the Statement of Work. The Quality Assurance Program must be accepted by the Buyer prior to initiation of procurement of materials and fabrication.

The Seller's Quality Assurance Program shall apply to all components except as discussed in Section 9.1.3.

9.1 Procurement of Materials

The MCOs are designated to be fabricated with a graded quality assurance program. The components are classified into three categories of safety significant classes (SSC). They are Safety Class (SC), Safety Significant (SS), and General Service (GS). The components of the MCO are classified in Table 9-1 in accordance with WHC-CM-4-4C, Safety Analysis Manual.

All materials shall conform to ASME specifications. Certified Material Test Reports (CMTR's) shall be provided for each heat (lot) used, and included in the final document package. Any discrepancies from the ASME specification requirements must be resolved before the material in question may be used.

Certified Material Test Reports shall, at a minimum, include the following test data: chemical analysis, yield strength, ultimate strength, elongation, and reduction of area.

The requirements for the procurement of the different quality categories, for the components on the Design Drawings, are listed in Table 9-1.

9.1.1 Procurement of ASME Code Category "SC" Materials

ORIGINAL

Category SC materials shall be procured from a supplier/manufacturer whose QA Program has been surveyed and/or audited by the seller to assure the program meets the applicable requirements of 10CFR71 Subpart H. QA programs meeting the requirements ASME Section III, NCA-3800, or the applicable requirements of NQA-1 are an acceptable basis for these surveys/audits.

9.1.2 Procurement of ASME Code Category "SS" Materials

These requirements address all category "SS" materials. The four acceptable methods for the procurement of these materials are:

A. Procure material from a supplier/manufacturer holding a current ASME Section III Quality System Certificate (Materials).

B. Procure material from a supplier/manufacturer that has been surveyed and audited in accordance with the requirements of 10CFR71, Subpart H.

C. Procure materials from any supplier/manufacturer and perform all the examinations and tests required by the material specification. The Seller shall prepare and supply a CMTR stating that the material meets all the requirements of the specification.

D. Procure material from an ISO 9000 certificate holder.

9.1.3 Procurement of Category "GS" Materials

Category "GS" materials shall be procured from any source. A Certificate of Conformance shall be provided for all materials and items.

9.2 Quality Control

ORIGINAL

9.2.1 Examination Point Program

An examination point program shall be prepared and included in the Seller's manufacturing plan and submitted for approval in accordance with Section 11. This examination point program shall include a description of all examination points and hold points.

9.2.2 Subcontractor QC Procedures

The Seller's and the Seller's subcontractor QC procedures shall include the use of fabrication travelers or other process control documents. Fabrication travelers shall reference or describe the procedures used in accomplishing the tasks, the examination, the test requirements and any examination hold points. Fabrication travelers shall include hold and witness points for review by the Buyer.

9.2.3 Dimension Control

All dimensions, as indicated on the referenced Design Drawings, shall be measured and documented in accordance with the Seller's examination procedures.

AB 5/3/19

9.2.4 Access to Facilities for QC

The Buyer and the Owner, or the Owner's authorized agent shall have full access to the Seller's or the Seller's subcontractor's facilities for reviewing progress and determining acceptability of quality control activities.

9.2.5 Access to Facilities for QA

The Buyer and the Owner, or the Owner's authorized agent shall have full access to the Seller's or Seller's subcontractor's facilities for auditing the implementation of the Seller's Quality Assurance Program and for performing QC Surveillance of the MCO. Any findings resulting from audit or surveillance of the Seller's or subcontractor's facilities shall be addressed and promptly corrected to the Buyer's, Owner's, or the Owner's authorized agent's satisfaction.

9.2.6 Nonconformance

Nonconformances with purchase documents, drawings, approved procedures, or material requirements dispositioned as "Repair" or "Use-As-Is" shall be submitted to the Buyer for review and approval prior to implementation. The Seller shall provide a suggested technical justification for, and a recommended disposition, when submitting the Nonconformance to the Buyer. The use of electronic transmission devices, such as FAX or e-mail are acceptable methods for transmittal of nonconformance documents where time is critical, provided the transmission is legible. A hard copy must follow.

Any work that is done to a piece or assembly after the normal processing/fabrication steps are complete is considered rework. (This includes the use of filler material added to the MCO in order to rework surface defects and meet specifications.) The Seller shall keep a record (in the form of a map) of all locations where rework has been performed on an MCO. Note: Defects such as small pits or scratches less than 1/32" deep do not require rework (except for sealing surfaces). The seller shall report any nonconformances discovered after delivery of the MCO's in writing to the Buyer within 15 working days of discovery.

The accepted Nonconformance disposition shall include a technical justification provided by the Buyer.

9.3 Quality Requirements for Shipping Release

ORIGINAL

The MCO shall not be shipped until the following requirements are met:

A. All tests and examinations have been performed.

B. The MCO final documentation package is complete and approved by the Buyer's quality representative.

C. The Seller shall notify the Buyer two (2) weeks before his intended shipping date and allow the Buyer sufficient time prior to shipment to review the documentation package as described in Section 11.3. The documentation package shall be complete and final before it is submitted for review, including documentation of the final performance tests. The Buyer reserves the right to witness repetition of any or all of the final performance tests 3 through 8, and the pressure test, after the MCO and its documentation package have been completed.

9.3.1 Certificate of Compliance

With the final documentation package, the Seller shall submit to the Buyer, a Certificate of Compliance to this Specification and the Design Drawings. As a minimum, the Certificate shall include, but not be limited to the following information:

A. Purchase Order Number.

B. Procurement Specification and Design Drawing numbers, including any approved changes, and Nonconformances applicable to the equipment.

C. A certificate by the person who is responsible for the Seller's quality assurance function.

D. Provisions for the signature of the Buyer quality representative. The Buyer's signature is to indicate an agreement that the equipment and its documentation is ready for shipment, and does not constitute acceptance by the Buyer.

ORIGINAL

Table 9-1
MCO MATERIAL QUALITY CATEGORY DESIGNATION

NOMENCLATURE/ DESCRIPTION	CODE CRITERIA	SCC DESIGNATION	QA CONDITION
MCO SHELL	SUBSECTION NB	SC	IMPORTANT TO SAFETY
LOCKING RING	SUBSECTION NB	SC	IMPORTANT TO SAFETY
MCO SHIELD PLUG	SUBSECTION NB	SC	IMPORTANT TO SAFETY
MCO BOTTOM ASS'Y FORGING	SUBSECTION NB	SC	IMPORTANT TO SAFETY
MCO COLLAR FORGING	SUBSECTION NB	SC	IMPORTANT TO SAFETY
MK1A	SUBSECTION NG	SC	IMPORTANT TO SAFETY
MK1A SCRAP	SUBSECTION NG	SC	IMPORTANT TO SAFETY
MKIV	NONCODE (ASTM)	GS	NOT IMPORTANT TO SAFETY

NOMENCLATURE/ DESCRIPTION	CODE CRITERIA	SCC DESIGNATION	QA CONDITION
MKIV SCRAP	NONCODE (ASTM)	GS	NOT IMPORTANT TO SAFETY
PROCESS VALVES	SUBSECTION NB	SS	IMPORTANT TO SAFETY
RUPTURE DISK	SUBSECTION NB	SC	IMPORTANT TO SAFETY
HEPA FILTER EXTERNAL	NONCODE, COMMERCIAL GRADE	SS	NOT IMPORTANT TO SAFETY
BLIND FLANGES & BOLTS	SUBSECTION NB	SS	IMPORTANT TO SAFETY
GASKETS	NONCODE, COMMERCIAL GRADE	SS	IMPORTANT TO SAFETY
CONDITIONING CHAMBER FILTER INTERNAL HEPA FILTER	NONCODE, COMMERCIAL GRADE	SS	NOT IMPORTANT TO SAFETY
LONG PROCESS TUBE	NONCODE, COMMERCIAL GRADE	SS	NOT IMPORTANT TO SAFETY
MCO BOTTOM ASS'Y FORGING SPACER PLATES	SUBSECTION NG	SC	IMPORTANT TO SAFETY
LOCATOR CONE	SUBSECTION NG	SC	IMPORTANT TO SAFETY
PROCESS RELIEF VALVE	NONCODE COMMERCIAL GRADE	SS	NOT IMPORTANT TO SAFETY
SHOVE PROCESS TUBE	NONCODE (ASTM)	SS	NOT IMPORTANT TO SAFETY
2 MM PROCESS TUBE SCREENS	NONCODE	SS	NOT IMPORTANT TO SAFETY
ORIFICE PLATES	NONCODE	SS	NOT IMPORTANT TO SAFETY

10.0 PACKAGING AND SHIPPING REQUIREMENTS

ORIGINAL

10.1 General Requirements

10.1.1 Applicable ASME/ANSI Guidelines

All packaging and shipping shall be in accordance with ASME NQA-1-1994 Edition, Subpart 2.2, "Quality Assurance Requirements for Packaging, Shipping, Receiving, Storage, and Handling of Items for Nuclear Power Plants." All packaging and shipping shall conform to Level C requirements or better. The Seller shall provide a packaging plan with details by component.

10.1.2 Shipping Information

On the date of the MCO shipment, the Seller shall inform the Buyer of the following: the carrier bill of lading number, the routing and destination instructions, and a list of the items being shipped.

10.1.3 Seller Liability For Shipping

The Seller shall ensure that the as-fabricated, as-tested condition of the MCO is maintained, and that distortion or creep during shipment is prevented. Any damage or distortion of the MCO as a result of improper packaging, in transit handling, or shipping, shall be repaired at the expense of the Seller.

The MCO shall be packaged and shipped in such a manner that all components are present so Test 4 or 6, Section 7.3.4 or 7.3.6, respectively can be satisfactorily repeated upon receipt by the Buyer.

10.2 Detailed Requirements

10.2.1 MCO, Locking Ring, and Shield Plug Preparation for Shipping

The completed MCO shell shall be shipped with the locking ring (including jacking bolts) installed in the vessel collar. Before installing the locking ring, the surfaces of the jacking bolts shall be pre-lubed with a uniform film of Nuclear Grade (low halogen content) lubricant such as Nickel Never-Seez compound. Special care shall be taken to ensure that lube applicator brush bristles (or other contaminants) are not deposited on the threads. The locking ring jack bolts shall be installed finger-tight, to full depth of thread. The locking ring and the canister collar buttress thread surfaces shall be lubricated with Neolube (graphite alcohol).

The shipping arrangement or palletization of the shield plug shall ensure that the HEPA filter manifold and basket stabilizer extension are protected during shipment. Rupture disks and relief valves shall be installed in the shield plug, and torqued to final values. Process valve plugs (without their threaded metal o-ring seal) shall be threaded in place finger-tight. Do not over tighten the process valve plugs to avoid galling the sealing surface. Process port flange covers (without their metal o-ring seals) shall be installed and the flange bolts tightened finger-tight. Flange cover bolt threads and process valve plug threads shall be pre-lubed with a uniform film of Nuclear Grade (low halogen content) lubricant such as Nickel Never-Seez compound. Special care shall be taken to ensure that lube applicator brush bristles (or other contaminants) are not deposited on the threads.

10.2.2 Packaging, Segregation, and Labeling

ORIGINAL

MCO components shall be packaged/segregated for shipment and storage according to the requirements specified in the following table, in addition to the requirements of NQA-1. Components on different rows of the table may not be packaged or crated together, with the exception of the locking ring (1b), which is to be shipped within the MCO shell as specified. Packages containing MCO vessels, shield plugs, process tubes, and Canister covers shall be packaged/palletized in a nesting manner so that shells remain stable when or if banding is removed, and suitable for forklift

AB 5/13/97

handling. Serial numbers of components shall be included in the outside identification marking, and component identification/serial numbers shall be clearly visible through overwrap.

MCO Component	Component-specific Requirements
1a. MCO Shell	-Two shells per package, side by side horizontally at the same level in the package. Packages to be stackable up to three to four tiers deep. Shells should nest on packaging to promote stability even after any banding is removed. Packages not to exceed dimensions of 36"x53"x168".
1b. Locking Ring	-Installed in the MCO shell at the factory; see Section 10.2.1.
2. Shield Plug	-Each shield plug assembly to be shipped separately on a holder/pallet per constraints specified in Section 10.2.1. Expected weight of shield plug assembly is approximately 1657 lb, so a heavy duty pallet will be required.
3. Process Tube	-Manufacturer may package multiple process tubes per package, but the total package weight and dimensions may not exceed that of the MCO shell package described above. Recommend crating of 20 tubes per 12"x12"x 156" package (crates will not be stacked).
4. MCO Cap	-Packaged/shipped on pallets (two caps per pallet).
5. Mark IA Basket Mark IA Scrap Basket Mark IV Basket Mark IV Scrap Basket	- Loaded on pallets, with a maximum of two baskets per pallet.
6. 24" diameter shield plug seal - "helicoflex" seal	Individually wrapped and packed in crates in conveniently sized lots. Recommend crating in lots of 20, 24"x30"x30" crate size maximum.
7. Small parts	Wrapped/packaged as per discussion given in Section 10.2.3 and packed in crates in conveniently sized lots. These parts may be packaged together provided that the outermost container identified all items and quantities contained within.

10.2.3 Small Parts

ORIGINAL

Small parts (such as flange cover seals, process plug seals, etc.) shall be bagged, boxed, bubble-packed or otherwise protected within the assembly packaging to protect against damage in transit, handling, and storage. Small parts packaging shall be clearly labeled with all relevant component identification information - part name, part number, drawing number, etc.

10.2.4 Packaging and Shipping Procedures

The Seller shall provide the Buyer with the written procedures (including drawings and engineering sketches as appropriate) for packaging, labeling, and shipping of the MCO assembly. The procedures shall include package lift point provisions and lifting weight. Seller shall be required to obtain Buyer approval of the packaging, labeling, and shipping procedures before shipment of MCO components.

AB 5/13/97

10.3 Delivery

Truck unloading will be the responsibility of the Owner. The truck may be unloaded within the Owner's protected area at a location designated by the Owner. At least twenty-four (24) hours notice of truck arrival shall be given to the Owner's receiving representative. In addition, the Seller shall comply with the specific delivery times mandated by Richland Operations.

11.0 DOCUMENT AND RECORD SUBMITTAL REQUIREMENTS

This section contains the requirements for document and record submittals for the MCO. Table 11-2 summarizes the required documents to be submitted for review and approval. Table 11-3 summarizes the required records to be submitted at the time of shipment.

11.1 Documents

ORIGINAL

11.1.1 Shop Drawings

The Seller shall prepare shop drawings as necessary for normal shop practice for all assembly, sub-assembly, and piece parts associated with the MCO. The Seller shall prepare and submit one reproducible mylar and two prints of all shop drawings to the Buyer. If shop drawings are prepared using a computer-aided design (CAD) system, electronic copies of the drawing files shall also be submitted to the Buyer (AutoCAD Release 12 files are preferred).

The shop drawings are to be full-size and legible with uniform background density suitable for microfilming and subsequent reproduction from microfilm.

The shop drawings will be reviewed and, if satisfactory, will be approved. Drawings must be approved by the Buyer before fabrication begins. If not satisfactory, the Seller will be notified of the items requiring further explanation or correction; after which, one reproducible mylar and two prints of the corrected drawings and CAD files shall again be submitted for approval. The Seller shall appropriately note any changes by dated revisions on the drawing.

All shop drawings must be checked for accuracy prior to submission for approval. The approval of shop drawings shall not be construed as a complete check. Approval of shop drawings will not relieve the Seller of the responsibility for any error which may exist on the shop drawings. Approval of the shop drawings does not relieve the Seller of the responsibility for meeting the Buyer's design drawing requirements which are part of this specification.

If the Seller uses sub-contractors or sub-suppliers, the Seller is responsible for assuring that the sub-supplier uses only Buyer-approved drawings for finished pieces, and that the sub-supplier meets all applicable specification requirements.

BB 5/13/

11.1.2 Drawing Standards

Weld symbols shall be in accordance with the requirements of AWS A2.4.

The following Drafting Lettering Standards shall apply, such as supplemented by ANSI Y14.5 series:

A. Minimum character height (A, B, C, size drawings): 0.125 in. (1/8");

B. Minimum character height (D and E size drawings): 0.156 in. (5/32");

C. Minimum spacing between lines of characters: height of characters;
D. Machine and guide generated characters: 12 point size minimum;

E. Density of characters and lines: dense, sharp, and uniform.

ORIGINAL

11.2 Examination and Test Procedures

Examination and test procedures shall include identification of each characteristic or attribute evaluated, the measuring and test equipment used, the examination/testing set-up for each characteristic/attribute evaluated and other requirements as required by Code, Standard and Contract.

11.3 Records

The Seller shall submit for approval one sample document package for a complete MCO and all components to the Buyer. This sample package is to show the format for each required document, and the method of binding the documents. Buyer approval of sample document package is required prior to MCO fabrication.

The Seller shall assemble and submit to the Buyer, no later than one (1) to two (2) weeks prior to the MCO shipping date, a copy of the final records package. After the final records package has been approved by the Buyer's QA representative, two (2) copies shall be prepared. The original copy of the final document package shall be provided to the Buyer and the second copy shall be shipped with the MCO.

11.3.1 General Requirements For Document Packages

Each Document Package shall comply with the following general requirements:

1. Each package shall have a Table of Contents.

2. Each page of the document package is to be consecutively numbered and marked with the unique MCO serial number.

RB 5/13/97

3. All records must be legible, including signatures, (signature must be legible and or typed/printed) inspection stamps, page numbers, etc. Copies of records like Certified Material Test Reports will not be acceptable if legibility is in question.

4. Each piece of the MCO (shield plug, vessel, locking ring, process tube, etc) shall be identified with a serial number so traceability to inspection results can be maintained.

5. Inspection records shall include M&TE traceability, M&TE serial number, and calibration due date.

6. The Seller shall sign the Conformance Statement before presenting the items and document package to the Buyer for final inspection prior to shipment.

7. All recorded information shall be typed or recorded neatly in black ink.

8. Corrections may be made using a single line through the error, making the correction, and providing name and date. No correction fluid or tapes may be used on submitted original records.

9. Unacceptable records found upon receipt by the Buyer shall be replaced by the Seller at the Seller's expense in an expedited manner.

10. The document package shall include, but not be limited to the items identified in Tables 11-1, 11-2, and 11-3.

11. The Seller shall prepare and submit for approval by the Buyer, an Index of Records. The Index of records shall include the records identified in Table 11-3, as well as any documents used by the Seller's QA Program to trace the record to the equipment.

12. All test reports and test results shall be compared to the acceptance criteria. These reports shall contain the signature of the authorized representative or the agency performing the tests. The reports are for the Buyer review and acceptance, prior to release for shipment.

13. Functional test results shall include signed-off copies including signatures on these reports by the authorized representatives or by the agency personnel performing the tests.

14. Certified material test reports with actual chemical and physical properties for each heat number for all material (i.e., piece traceability shall be provided.). Physical properties test data shall include yield strength, ultimate strength, reduction of area, and elongation.

15. Certification of compliance that each non-evidence producing form of NDE (i.e., UT, and PT) has been by specified requirements and ASNT qualified operators.

ORIGINAL

BB 5/3/07

16. A complete radiography history including exposure diagram, reader sheet, record of defects, record of repairs, and final cleared exposure record shall be submitted to the Buyer. Film and reader sheets should be marked or noted to show any condition other than normal (i.e., surface conditions or defects within acceptance standards, etc.) and marked to show the level qualifications of the reader. Final film shall be sent to the Buyer.

17. Records of all repairs as required by Section III of the ASME Code.

18. Record of all nonconformances affecting the Seller's approved drawings and specifications, if any, along with the Buyer's supplied technical justification for acceptance.

19. Leak testing shall be performed and documented per ANSI N14.5.

20. Following satisfactory completion of all examinations and tests, the Seller shall prepare a complete set of as-built dimension documentation. This may be done by as-built drawings or check list with recorded dimensions. All dimensions shall be verified to be within the Design Drawing tolerances specified. Critical dimensions, as specified on Table 11-1 shall be measured and recorded on the as-built drawings or on separate examination sheets. As-built drawings, if accompanied by dimensional examination documents recording critical dimensions, may consist of the final revision of the shop drawing depicting the as-built condition, including nonconformances (i.e., use-as-is and repair). All as-built shop drawings shall be certified as to correctness.

21. Records of personnel qualification such as welding, NDE, etc. ORIGINAL

22. Records of the calibration of measuring and testing equipment used for acceptance.

23. Copies of all approved MCO fabrication instructions, procedures, and drawings.

24. Pressure testing shall be performed and documented per ASME Section III, Division 1, Subsection NB, Article 6000.

Table 11-1
AS-BUILT DIMENSION REPORTS

PART	Corresponding Critical Dimension Table
MCO Shell Assembly	6.3.6-1, MCO Shell Critical Dimensions
Process Tube	6.3.6-2, Process Tube Critical Dimensions
Shield Plug	6.3.6-3, Shield Plug Critical Dimensions
Locking & Lifting Ring	6.3.6-4, Locking & Lifting Ring Critical Dimensions
Canister Cover	6.3.6-5, Canister Cover Critical Dimensions

CB 5/13/97

PART	Corresponding Critical Dimension Table
Mark IA Storage	6.3.6-6, Mk IA Storage Basket Critical Dimensions
Mark IA Scrap	6.3.6-7, MK IA Scrap Basket Critical Dimensions
Mark IV Storage	6.3.6-8, MK IV Storage Basket Critical Dimensions
Mark IV Scrap	6.3.6-9, MK IV Scrap Basket Critical Dimensions

Table 11-2
DOCUMENT SUBMITTAL LIST

Item	Type of Document Required	Reference Spec. Sect.	Timing[1]
1	Detailed Manufacturing Schedules		15 days AC
2	Manufacturing Plan including key examination and test witness points		30 days PF
3	Shop Drawings (detail and assembly)		30 days PF
4	QA Manual with implementing procedures and instructions		Submit with bid
5	Material Purchase Specifications		2 week MO
6	Shop Procedures (i.e., machining, fabrication, cleaning, shipping, repair, etc.)		30 days PF
7	Process Specifications (i.e., welding, NDE, etc.)		30 days PF
8	Examination and Test Procedures (i.e., dimensional, pressure, leak, performance, etc.)		30 days PF
9	Nonconformance reports (i.e., Use-As-Is and Repair, other than repair of welds)		Prior to implementation
10	Shipment Bill of Lading		On date of shipment
11	Packaging and Shipping Procedures		90 days PS
12	Index of Records		30 days PS
13	As-Built Drawings		30 days AS

Note: AC = After award of contract,
PF = Prior to start of fabrication
MO = Prior to material order,
PS = Prior to shipment,
AS = After shipment

ORIGINAL

RB 5/13/97

Table 11-3
RECORDS SUBMITTAL LIST

Item	Type of Document Required	Reference Spec. Sect.
1	Index of records	
2	Either Certified Material Test Reports or Certificates of Compliance, as required by the Specification	
3	Filler Metal Certification	
4	Repair Records	
5	Examination Records and Reports, including Receiving Examination and Source Examination	
6	Travelers and/or Checklists	
7	Nonconformance Reports (Use-As-Is and Repair)	
8	Performance Test Reports	
9	Dimensional Examination Reports	
10	Weight Certificates	
11	Non-Destructive Examination Reports including: • Leak Testing • Ultrasonic Test Reports • Radiographic Reports and Films • Liquid Penetrant Examination	
12	Certificate of Compliance	
13	As-Built Documents (including shop drawings)	
14	Personnel Qualification Records	
15	Examination and Test Equipment Calibration Reports	
16	Copies of All Approved MCO Fabrication Instructions and Procedures	
17	Pressure Test Report	

ORIGINAL

MULTI-CANISTER OVERPACK

FABRICATION SPECIFICATION

APPENDICES

APPENDIX 1

(Intentionally left Blank)

APPENDIX 2

MCO INTERNAL HEPA FILTER SPECIFICATION (DESH)

MCO INTERNAL HEPA FILTER SPECIFICATION

1.0 INTRODUCTION

1.1 BACKGROUND

The MCO internal filter is required for radioactive contaminant filtration inside the MCO to protect process equipment from contamination. The filter(s) will be filtering a saturated steam atmosphere at steam flows of 35 cubic feet per minute (cfm) at temperatures not to exceed 375°C inside a vacuum chamber. The filter(s) shall provide HEPA removal efficiency of 0.3 micron (μm) particles and have a 40 gram loading capacity with 10 inches water column differential pressure at 35 cfm air flow. The filter(s) shall be sized such that 3.5 inches water column differential pressure at 35 cfm air flow clean. The filter(s) shall be capable of regeneration by back flow of gas or liquid, and be moisture repellant to saturated steam. The filter/manifold(s) shall not be larger than the envelop described in drawing H-2-828049 and be no larger than 2.6 inches in diameter (see drawing for conceptual filter arrangement scheme). The filter/manifold(s) shall be constructed of all 316 stainless steel. The filter structure shall also withstand a 100g drop and maintain a minimum of 50% of flow and filter loading capacity but HEPA efficiency is not required to be maintained after the drop.

2.0 REQUIREMENTS

2.1 FILTER DOCUMENTATION REQUIREMENTS

The bidders shall provide documentation and/or test results for the following requirements equivalent to or superseding the documents described below with their proposals:

2.1.1 Filter Airflow Resistance

Test reports or flow versus differential pressure curves for a clean airflow (Helium, steam) to meet 3.5 inches water column at 35 ACFM air.

2.1.2 Filter Removal Efficiency

Test reports documenting DOP, or other approved test material, 0.3 μm particulate removal efficiency of 99.97%.

2.1.3 Filter Loading Capacity

Test reports documenting filter loading capacity in accordance with standard SAE J726 or ASHRAE 52-76 using ASHRAE fine test dust.

2.1.4 Filter Moisture Repellency

Test report shall document filter efficiency and differential pressure performance while subjected to water spray during ASHRAE particulate loading per Section 2.2.3.

2.1.5 Filter Regenerability

Test reports documenting filter regeneration (minimally 70% clean differential pressure, loading capacity recovery, and 99.97% particulate removal efficiency after regeneration) per ASHRAE 52-76.

2.1.6 Filter Rough Handling

Certificate of Conformance, test reports, or engineering calculations shall be provided confirming the filter will withstand a 100g drop or 100 times the filter(s) weight in bending and maintain 50% of original rated flow and 50% of filter loading capacity after the drop. The filter shall sustain no visible integrity loss (cracks or punctures in the filter media, endcaps, or manifold hardware.)

2.1.7 Filter Heating Resistance

Test reports documenting resistance to heated air and maintain particulate removal efficiency during 240 hours of 375°C per standards UL-586 and MIL-F51068.

2.2 FILTER DESIGN REQUIREMENTS

2.2.1 Filter Airflow Resistance

The filter(s) shall be sized for a clean airflow (Helium, steam) of 3.5 inches water column at 35 ACFM air.

2.2.2 Filter Removal Efficiency

The filter(s) shall be designed to withstand a DOP challenge, or other approved test material, of 0.3 μm particulate and remove 99.97% of the particulate.

2.2.2 Filter Loading Capacity and Surface Area Maximization

The filter(s) shall provide maximum resistance of 10 inches water column when loaded with 40 grams of ASHRAE fine test dust at 35 ACFM air in accordance with standard SAE J726 or ASHRAE 52-76. The filter(s) shall also be designed to provide a maximum surface area square footage.

2.2.3 Filter Moisture Repellency

The filter(s) shall provide maximum repellency of 10 inches water column when the filter is challenged with supersaturated steam containing a minimum 1 gram of entrained water per 1 cubic foot of air at 35 ACFM.

2.2.4 Filter Regenerability

The filter(s) shall be capable of reverse back pulsing with gas to regain minimally 70% loading

capacity as specified in Section 2.2.2 and differential pressure and 99.97% particulate filtration per ASHRAE 52-76. The gas reverse back pulse shall consist of rapid application of reverse flow of helium or argon to the filter manifold (all filters) from a reservoir with a maximum size of 5 cubic feet, at a maximum initial pressure of 100 psi through a 20 foot length of 1 inch ID maximum discharge line.

2.2.5 Filter Heating Resistance

The filter shall be designed to with stand resistance to heated air and maintain particulate removal efficiency during 240 hours of 375°C per standards UL-586 and MIL-F51068.

2.2.6 Filter Design Basis Accident Functionality

The filter/manifold(s) shall be designed to withstand a 100g drop or 100 times the filter(s) weight in bending and maintain 50% of original rated flow and 50% of filter loading capacity after the drop. The drop or force loading to the filter shall be applied midway on the filter in a radial direction normal to the longitudinal filter axis. The filter shall also be designed to physically withstand forces related to a 1035 kPa (150 psig) pressure spike transient and maintain 50% flow and 50% loading capacity after the pressurized pulse. The intent of this requirement is to maintain a high removal efficiency (non-HEPA rated) by assuring no visible holes, punctures, cracks, or extensive deformations that circumvent or block the filter flow path.

2.3 CONSTRUCTION REQUIREMENTS

2.3.1 Filter Media

The filter(s) shall be all stainless steel construction--316L, or other suitable corrosion resistant materials. Filter end caps (if required) shall be constructed from 316L stainless steel and NOT attached to filter media by epoxies or sealants. Rolled or metallic end cap bonding such as welding or brazing may be appropriate. If weld bonding is utilized, it is suggested that low carbon base materials such as 316L or other similar corrosion resistant materials be used.

2.3.2 Filter Mounting Hardware

The filter(s) mounting hardware (i.e. supports, manifolds, etc.) shall be constructed from 316L stainless steel, other low carbon base, or corrosion resistant material (painted surfaces shall not be acceptable). The filter(s) shall be mounted to manifold in such a manner to prevent build-up of excess free water inside the manifold. The filter(s) shall be mounted near (+/- 0.0625 inches) the bottom of the manifold and the manifold angled such that any free water in the manifold will drain back into the filter media. The total weight of the filter and mounting hardware shall not exceed 22.7 kg (50 lbs). Refer to drawing H-2-828049 for filter envelop space, mounting suggestions, and additional construction suggestions.

2.3.3 Filter Environmental Conditions

The filters shall be designed and constructed to withstand the following environmental conditions:

- Design Basis Accident equal to a 100g drop or 100 times the filter(s) weight in bending per design stated above;
- Temperature ranges from -20 to 375°C (375°C for a time period of 240 hours);
- Internal to external accidental pressure spike transient of 1035 kPa (150 psig) as described above; and
- All gas atmospheres such as Nitrogen, Hydrogen, Helium, Argon, Oxygen, air, and steam.

3.0 OPTIONS

3.1 Optional bids may be submitted for filters meeting the following design conditions:

Option #1: 35 acfm flow at 6.0" water column with 0.3 μm efficiency

Option #2: 35 acfm flow at 3.5" water column with 0.5 μm efficiency

All other specification requirements remain in force for the optional bids.

APPENDIX 3

POTENTIAL RUPTURE DISK SUPPLIERS

Address:	Fike Metal Products 704 South 10th Street Blue Springs, MO 64015
Telephone:	(816) 229-3405
Fax:	(816) 228-9277
Contact:	Jason Patterson Arthur Forsyth Co. (206) 283-5716 phone (206) 284-7269 fax
Address:	Continental Disc Corporation 3160 West Heartland Drive Liberty, MO 64068
Telephone:	(816) 792-1500
Fax:	(816) 792-5447
Contact:	Michael Pruitt

APPENDIX 4

CARBONE LORRAINE

Product:	Helicoflex Seals
Model/Part No.:	H-305236 REV NC
Address:	Helicoflex 2770 The Boulevard P.O. Box 9889 Columbia, SC 28209
Telephone:	(803) 783-1880
Fax:	(803) 783-4279
Contact:	Michel LeFrançois

2770 THE BOULEVARD
P.O. BOX 9689
COLUMBIA, SC 29209 USA
TELEPHONE: (803) 783-1880
TELEFAX: (803) 783-4279

Helicoflex

[redacted]

HNF-SD-SNF-DR-003, Rev. 0
Appendix 19

TELEFAX

From: Michel LEFRANÇOIS

To: Chuck TEMUS
Company: VECTRA TECHNOLOGIES
Address:
Country/State: WA

Copy :

Telefax #: 206 874 2401

Columbia, March 3, 1997

Subject: MCO CASK SEAL / HELICOFLEX H-305236 REV NC
Ref.:

Dear Sir,

Re. your recent contact with Gerard Anthoine, please find sketch attached including seal description.

Please do not hesitate to call me at the number above if you have any question.

Yours Sincerely,

Michel Lefrançois

MCO CASK SEAL
HOLDING DEVICE FOR HELICOFLEX SEAL H-305236 REV NC
(SUPERSEDES PREVIOUS DESIGN H-304668 REV A)

Seal Description

- > Type HN220Sp
- > Silver Jacket
- > 300Series Stainless Steel Lining
- > High Strength Alloy Spring
- > Ø23.420" OD x Ø22.940" ID x 0.186" CS
- > Required Seating Load ≈ 1700 Lb / Inch
- > 4 clips recommended
- > Flange / Groove Sealing Faces to be 32 to 63rms

groove depth = 0.155" -0.004/+0

(Seal Cross-section = 0.186")

HELICOFLEX
COLUMBIA SC
ML - 2/14/97

Sketch to 4:1 Scale

APPENDIX 5

EG&G PRESSURE SCIENCE

Product:	C-Seal
Model/Part No.:	
Address:	EG&G Pressure Science 11642 Old Baltimore Pike Beltsville, MA 20705-1294
Telephone:	(301) 937-9654
Fax:	(301) 937-7027
Contact:	Jeff Layer

Contact Person : Jeff Layer

Phone / fax : (301) 937-9654 / (301) 937-7027

Address : EG&G Pressure Science
11642 Old Baltimore Pike
Beltsville Md. 20705

Part Number Information

- Modified Series 80 C-Seal (Boss Size #24) PSI part number 13632

- inch O.D. silver plated C-Seal PSI part number 13503

- Series 80 C-Seal (Boss Size #12) PSI part number 801A91-0012 (INCO 718)

- Series 80 C-Seal (Boss Size #4) PSI part number 801A91-0004 (INCO 718)

PERMISSION TO USE PAGE 23

EG&G Pressure Science grants Duke Engineering Services Hanford and Parsons permission to use page 23 of our product catalog in any reports or publications necessary.

Jeff Layer
Engineering Manager
EG&G Pressure Science
11642 Old Baltimore Pike
Beltsville Md. 21797

Signed : Jeff Layer

Jeff Layer 4-10-97

CC :
Transmitted by : _____ Date : _____

SERIES 80: special c-seals for "AN" fittings.

Designed specifically for AND 10049 (MS33656) Type Fittings & AND 10050 (MS33649) Type Bosses.
(Supersedes Series 70)

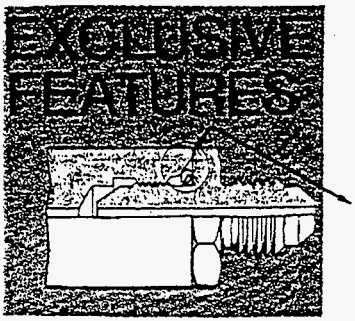

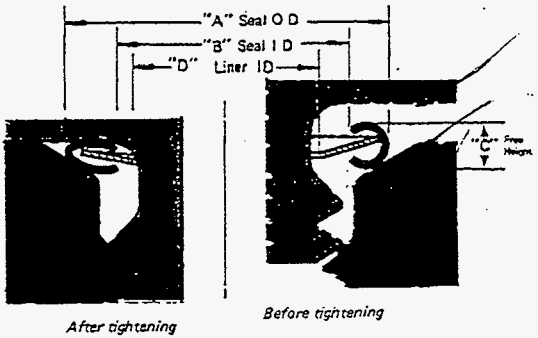

After tightening *Before tightening*

- *FOOLPROOF*, its symmetrical and slips right on in either direction at installation.
- *IT'S SELF ALIGNING* and installs easily regardless of attitude of the boss.
- *FOR EASY RE-USE*, it stays with the fitting after the first compression.
- *READILY "UNSCREWS"* from the fitting when you want to discard it.
- *LOAD IS NOT TRANSMITTED* from the fitting to the boss through the seal.
- *DOES NOT REQUIRE HIGH LOAD* to effect a tight seal.
- *SEAL IS PRESSURE ENERGIZED.*
- *NO MARKING OR FRETTING* of the boss or the fitting.

HOW TO SPECIFY:

Part Number: 801A50-____-A

- 801 — *Only Available in a single Free Height for Given Diameter*
- A — *Standard Material Thickness Per Table Below*
- 50 — *Material Type Inconel X-750*
- ____ — *Seal Dash No. (See Table Below)*
- A — *Quality Grade*

Plating (See Tables VI & VII, Pgs. 10 & 11)

BOSS SIZE NO.	SEAL DASH NO.	"A" SEAL O.D.	"B" SEAL I.D.	SEAL FREE HEIGHT "C"	"D" Liner I.D.	STD MATERIAL THICKNESS ("A" in 4th digit of P/N)
2	0002	.381	.302	.046	.278	.006
3	0003	.444	.365	.046	.341	.006
4	0004	.506	.427	.046	.397	.006
5	0005	.569	.490	.048	.459	.008
6	0006	.631	.552	.046	.517	.006
7	0007	.694	.615	.048	.579	.006
8	0008	.819	.740	.048	.699	.008
9	0009	.882	.803	.048	.761	.008
10	0010	.944	.865	.048	.817	.006
11	0011	1.100	1.021	.046	.932	.006
12	0012	1.156	1.051	.062	.995	.010
14	0014	1.281	1.176	.062	1.120	.010
16	0016	1.406	1.301	.062	1.245	.010
18	0018	1.593	1.488	.062	1.432	.010
20	0020	1.718	1.613	.062	1.557	.010
24	0024	1.968	1.863	.062	1.807	.010
28	0028	2.343	2.238	.062	2.182	.010
32	0032	2.594	2.489	.062	2.432	.010

Series 80 Seals are produced in only TWO Quality Grades:

A — Best Seal Line Finish

B — Less Than Best Seal Line Finish.

Tolerances are the same for both grades.

Both work at High and Low pressure.

Select class A for critical leakage. Class B for low cost.

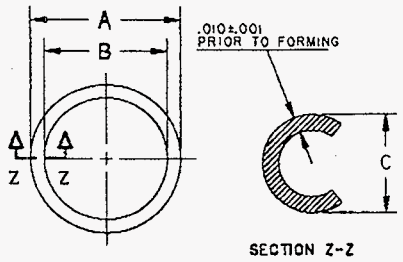

REVISIONS			
LTR	DATE	ECO NO.	APPROVAL

SEAL DIMENSIONS		
AVERAGE O.D. -A- SEE NOTE 2	AVG. MIN. I.D. -B- SEE NOTE 2	FREE HEIGHT -C-
2.062 +.000 -.005	1.969	.062±.002

NOTES:

1. TIG WELDING PRIOR-TO-FORMING PERMITTED.
2. MAXIMUM OUT-OF-ROUNDNESS OF DIAMETERS: .016
3. INDIVIDUALLY PACKAGE PER STANDARD PRESSURESCIENCE™ METHODS.
4. MARK EACH PACKAGE AS SPECIFIED ON SALES ORDER.
5. SEALING SURFACES TO CONFORM TO QCS 85345.

PRELIMINARY

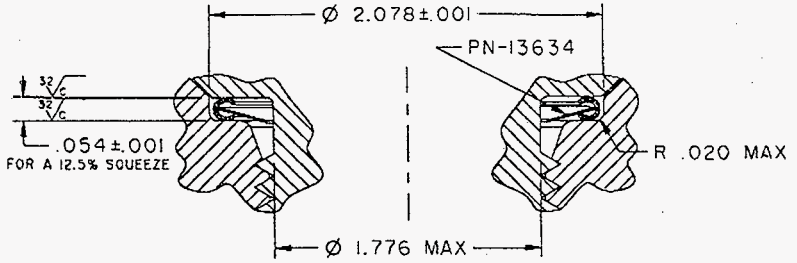

GEOMETRIC TOLERANCES TO ANSI Y14.5M-1982

MATERIAL: ~~INCONEL X-750~~ INCO 718
PER AMS 5598 OR 5582
.010±.001 THICK

RECOMMENDED CAVITY DETAILS

HEAT TREATMENT:
PER PS 0880 SEC. 11.0

PLATING:

UNLESS OTHERWISE SPECIFIED DIMENSIONS ARE IN INCHES

TOLERANCES ON

LINEAR DIMENSIONS			ANGLES
.X	.XX	.XXX	
±	± .01	± .005	1°

Q.A.		
MFG		
ENG		
CHECKED		
DRAWN	S ROWLAND	05 MAR 97
APPROVED		19

EG&G PRESSURE SCIENCE

11642 OLD BALTIMORE PIKE, BELTSVILLE, MARYLAND 20705-1294
PHONE (301) 937-4010 FAX (301) 937-0134

Computer Generated

C-SEAL 02.062 O.D. FACE TYPE
INTERNAL PRESSURE

CODE IDENT NO	DWG SIZE	DRAWING NO.
15284	A	13632

SCALE: N/A EST WT N/A LB SHEET 01 OF 01

PROJECT # 10813 DIE SIZE: 02.062/063/10PIC----RHT2

REVISIONS			
LTR	DATE	ECO NO.	APPROVAL

NOTES:

1. DIMENSIONS MAY BE INSPECTED WITH LINER SEATED IN A GAUGE WITH AN I.D. OF 2.322. LINER MUST BE ABLE TO BE SEATED USING LIGHT TO MODERATE FINGER PRESSURE.
2. SURFACE FINISH 125 MICRO-INCH ALL OVER.
3. REMOVE SHARP EDGES AND CORNERS.

PRELIMINARY

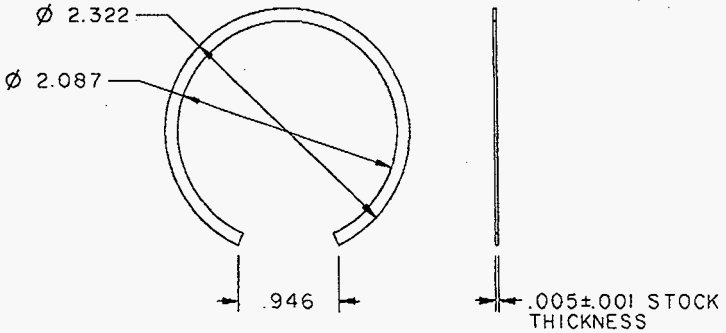

GEOMETRIC TOLERANCES TO ANSI Y14.5M-1982

MATERIAL: STAINLESS STEEL 304 PER AMS 5511, 5513 OR TYPE 301 PER AMS 5517, 5518, 5519

HEAT TREATMENT: NONE

PLATING: NONE

UNLESS OTHERWISE SPECIFIED DIMENSIONS ARE IN INCHES

TOLERANCES ON

LINEAR DIMENSIONS			ANGLES
.X	.XX	.XXX	
±	± .01	± .025	1°

O.A.		
MFG		
ENG		
CHECKED		
DRAWN	S ROWLAND	05 MAR 97
APPROVED		19

EG&G PRESSURE SCIENCE

11642 OLD BALTIMORE PIKE, BELTSVILLE, MARYLAND 20705-1294
PHONE (301) 937-4010 FAX (301) 937-0134

Computer Generated

C-SEAL LINER

CODE IDENT NO	DWG SIZE	DRAWING NO.
15284	A	13634

SCALE: N/A EST WT N/A LB SHEET 01 OF 01

REVISIONS			
LTR	DATE	ECO NO.	APPR'L

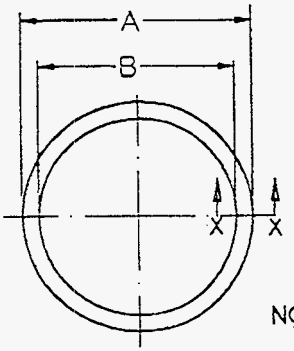

SEAL DIMENSIONS	AVG. O.D. -A- SEE NOTE 1	AVG. MIN I.D. -B- SEE NOTE 1	FREE HEIGHT -C-
BEFORE PLATING	3.520/3.510	3.310	.128/.122
AFTER PLATING	(3.519)	(3.305)	(.129)

NOTES:

1. REQUIRED OUT OF ROUNDNESS OF DIAMETERS : .100-.130
2. PLATING REQUIRED OVER THIS AREA AS SPECIFIED.
3. PLATING OPTIONAL AND MAY BE INCOMPLETE IN THIS AREA.
4. INDIVIDUALLY PACKAGE PER PSI SPECIFICATION.
5. MARK EACH PACKAGE AS SPECIFIED ON SALES ORDER.
6. VARIATION IN BASE MATERIAL HEIGHT SHALL BE LESS THAN .0005"/0.5" AROUND ENTIRE PERIMETER OF THE SEAL.
7. TIG WELDING PRIOR TO FORMING PERMITTED.

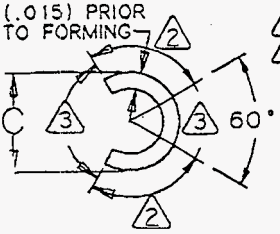

SECT. X-X

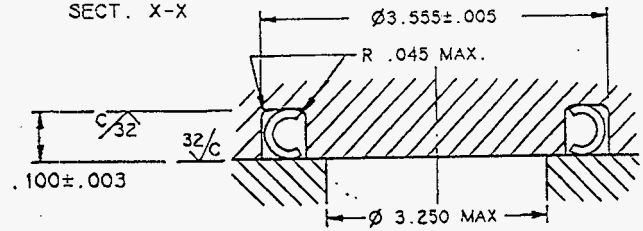

RECOMMENDED CAVITY DETAILS

THIS COPY PRINTED
SEP 1 2 1996
FOR VERIFICATION OF SENSITIVE PHONE 301-937-4010

MATERIAL: INCO 750 PER AMS 5598 .015±.001 THK	PLATING: SILVER PER PSA 0900 .0015-.0025 THK	HEAT TREATMENT: PER PS 0880 SECT. 11.2

UNLESS OTHERWISE SPECIFIED DIMENSIONS ARE IN INCHES

TOLERANCES ON			
LINEAR DIMENSIONS			ANGLES
.X	.XX ±.01	.XXX ±.005	±1°

EG&G PRESSURE SCIENCE
11642 OLD BALTIMORE PIKE, BELTSVILLE, MARYLAND 20705-1294
PHONE (301) 937-4010 FAX (301) 937-0134

	R E Hen	9-12-96
MFG	R.E.M.	9-12-96
ENG	T. Nezan	9/12/96
CHECKED	C. Hazut	9/10/96
DRAWN	H PORTER	10 SEP 96

C-SEAL

3.520 O.D. FACE TYPE, INTERNAL PRESSURE

CODE IDENT NO	DWG SIZE	DRAWING NO.
15284 A19-A5-7	A	13503

APPENDIX 6

JOHNSON WELL WIRE (WHEELABRATOR ENGINEERED SYSTEMS, INC.)

Product:	Well Wire & Strainer
Model/Part No.:	Parts are custom. Please refer to the Design Drawings for specific details.
Address:	Wheelabrator Engineered Systems, Inc. Johnson Screens 22020 Chaparral Lane Castro Valley, CA 94552
Telephone:	(510) 581-8577
Fax:	(510) 581-8622
Contact:	Dan McGee

APPENDIX 7

INDUSTRIAL SCREEN

Product:	Screen
Model/Part No.:	See Drawing 5873
Address:	Industrial Screen Products, Inc. P.O. Box 10673 Zephyr Cove, NV 89448
Telephone:	(800) 663-2702
Fax:	(800) 663-8060
Contact:	Thomas Anderson

Industrial Screen Products, Inc.
P.O Box 10673 • Zephyr Cove, NV 89448
Phone (800) 663-2702 • Fax: (800) 663-8060

Date: Thursday. January 16, 1997

To: Parsons / Vectra

Attn: Brent Becker / Chuck Temus

Fax: 509-946-8811

Sub: MCO Screen

Attached is drawing 5873 which shows the filter nozzle that you require

A quotation for this filter nozzle and the other screen will soon follow.

Best Regards

Thomas A Anderson

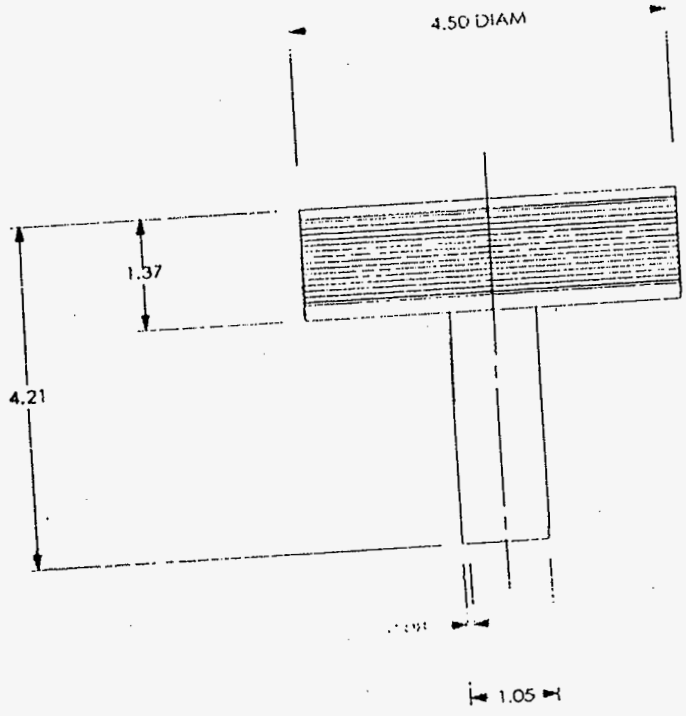

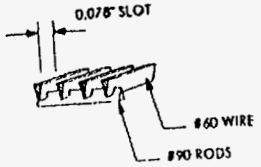

SCREEN DETAIL

DESIGN PRESSURE: 150 PSI
DESIGN TEMP: 700° F
MATERIAL: TYPE 304SS
DIMENSIONS: INCHES

THIS DRAWING MAY NOT BE REPRODUCED WITHOUT WRITTEN PERMISSION FROM INDUSTRIAL SCREEN PRODUCTS

DESCRIPTION			
PROPOSED FILTER NOZZLE			
REV	ENGINEERING DETAIL	08 JAN 97 DATE	

Industrial Screen Products
3000 Paydirt Drive
Placerville CA 95667
PH (916) 626-8001
FAX (916) 626-4376

DRG 5873 | 0

APPENDIX 8

MCO CRITICAL DIMENSION SKETCHES

NOTE: The critical dimension sketches and the critical dimension tables shall be applied in conjunction with each other to properly conform to assembled geometries, if sketches differ from design drawings, buyer will be notified immediately for resolution.

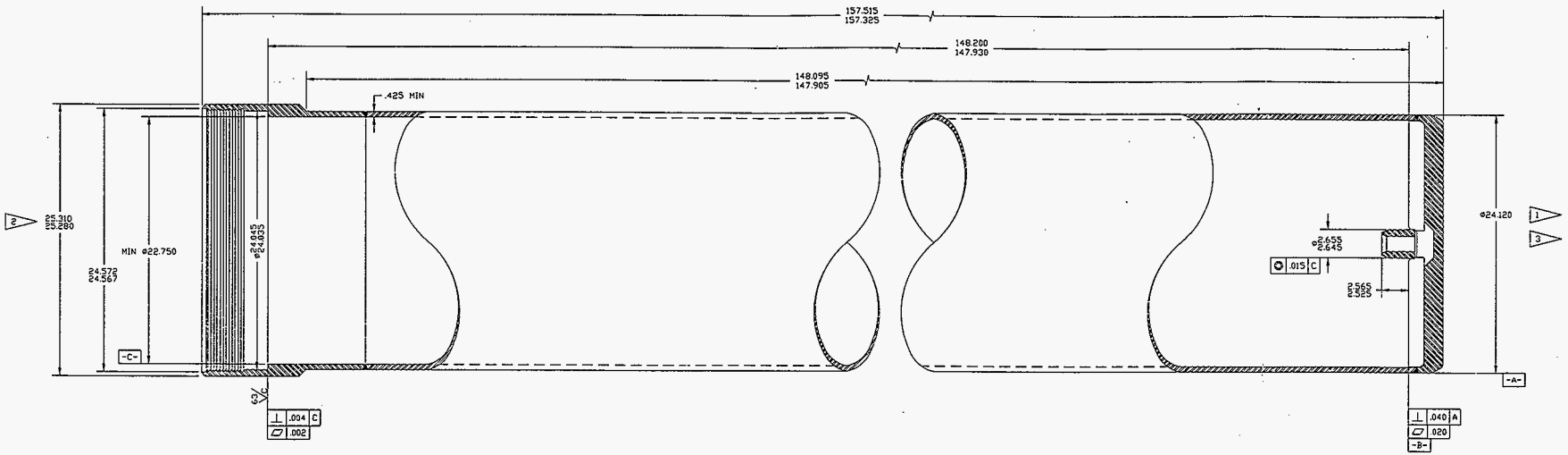

ORIGINAL

1. IN THE EVENT THAT A CONFLICT EXISTS BETWEEN THE CRITICAL DIMENSION TABLES/SKETCHES AND THE DESIGN DRAWINGS, THE BUYER SHALL BE NOTIFIED IMMEDIATELY FOR RESOLUTION.

1. EXTERNAL OVALITY SHALL NOT EXCEED 24.120" AS MEASURED WITH A RING GAGE NO SHORTER THAN 4.030".

2. OD AND STRAIGHTNESS ACROSS CANISTER COLLAR SHALL BE WITHIN A 25.310" DIAMETER ENVELOPE.

3. OD AND STRAIGHTNESS TO COLLAR'S 45° SHOULDER SHALL ALLOW INSERTION INTO A GAGE ø24.940" ID, 149" LONG.

[redacted]
HNF-SD-SNF-DR-003, Rev. 0
Appendix 19

DWG NO	TITLE	REF NUMBER	TITLE
DRAWING TRACEABILITY LIST		NEXT USED ON	REFERENCES

REVISIONS			
CADFILE	BSKETCHA	CADCODE	WIN95/ACD2.13.0:SS

BT BECKER 5/10/97

U.S. DEPARTMENT OF ENERGY
Richland Operations Office
Duke Engineering & Services Hanford, Inc.

MCO SHELL
CRITICAL DIMENSIONS

SKETCH 1 0

PARSONS I & T, INC SHOWN SKETCH 1 of 7

2 PLOT SCALE: 1=1 A19-A8-2 1 GTITLE.DWG (10/96)

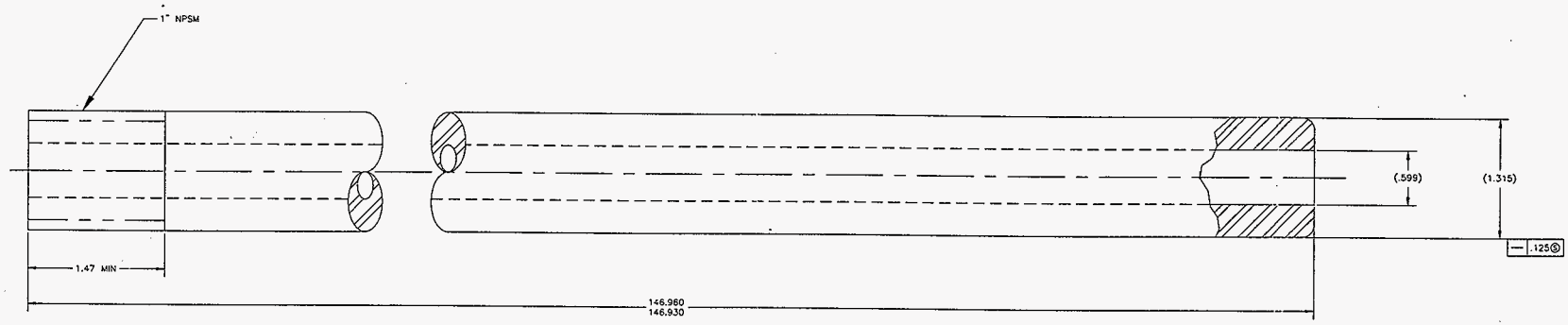

ORIGINAL

1. IN THE EVENT THAT A CONFLICT EXISTS BETWEEN THE CRITICAL DIMENSION TABLES/SKETCHES AND THE DESIGN DRAWINGS, THE BUYER SHALL BE NOTIFIED IMMEDIATELY FOR RESOLUTION.

[redacted]
HNF-SD-SNF-DR-003, Rev. 0
Appendix 19

DRAWING TRACEABILITY LIST			
DWG NO	TITLE	REF NUMBER	TITLE
		NEXT USED ON	REFERENCES

REVISIONS				
NTS	REV NO	DESCRIPTION	DATE	COMPANY

CADFILE BSKETCH8 | CADCODE WIN95:AC02:13.0:SS

U.S. DEPARTMENT OF ENERGY
Richland Operations Office
Duke Engineering & Services Hanford, Inc.

MCO PROCESS TUBE
CRITICAL DIMENSIONS

DESIGN AGENT PARSONS I & T, INC | NONE SHOWN | SKETCH 2 | 0 | SHEET 2 OF 7

2 PLOT SCALE: 1=1 | A19-A8-3 | GTITLE.DWG (10/98)

SKETCH 2 | REV 0 | SH 2 OF 7

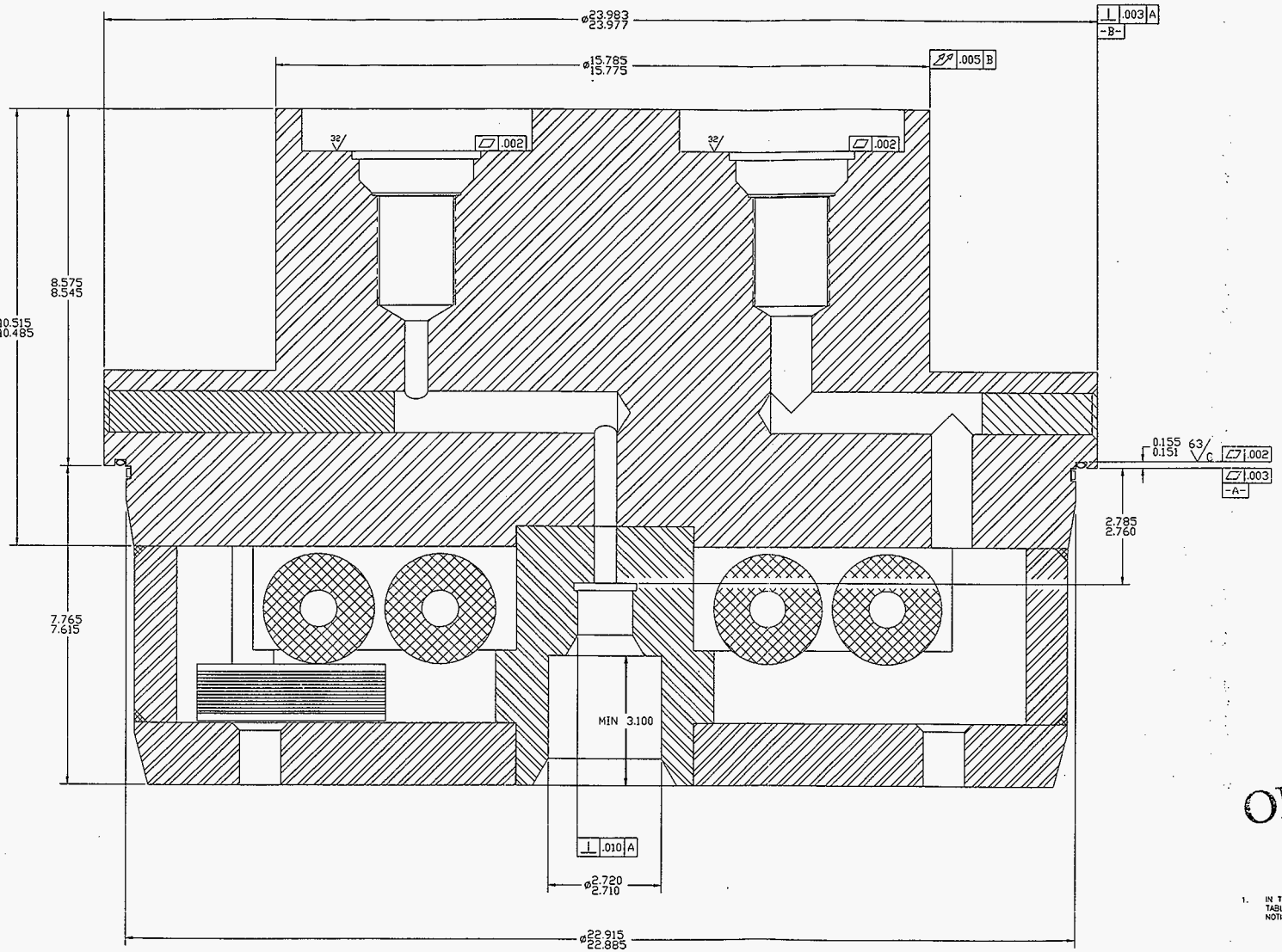

ORIGINAL

1. IN THE EVENT THAT A CONFLCT EXISTS BETWEEN THE CRITICAL DIMENSION TABLES/SKETCHES AND THE DESIGN DRAWINGS, THE BUYER SHALL BE NOTIFIED IMMEDIATELY FOR RESOLUTION.

[redacted]
HNF-SD-SNF-DR-003, Rev. 0
Appendix 19

BT BECKER 5/16/97

U.S. DEPARTMENT OF ENERGY
Richland Operations Office
Duke Engineering & Services Hanford, Inc.

MCO SHIELD PLUG
CRITICAL DIMENSIONS

SKETCH 3 0

PARSONS I & T, INC. SHOWN SHEET 3 OF 7

DWG NO	TITLE	REF NUMBER	TITLE
DRAWING TRACEABILITY LIST		NEXT USED ON	REFERENCES

REVISIONS

CADFILE @SKETCHC CADCODE WIN95:ACD2:13.0:SS

2 PLOT SCALE: 1=1

A19-A8-4 1 GTITLE.DWG (10/96)

SKETCH 3 SHEET 3 OF 7 REV 0

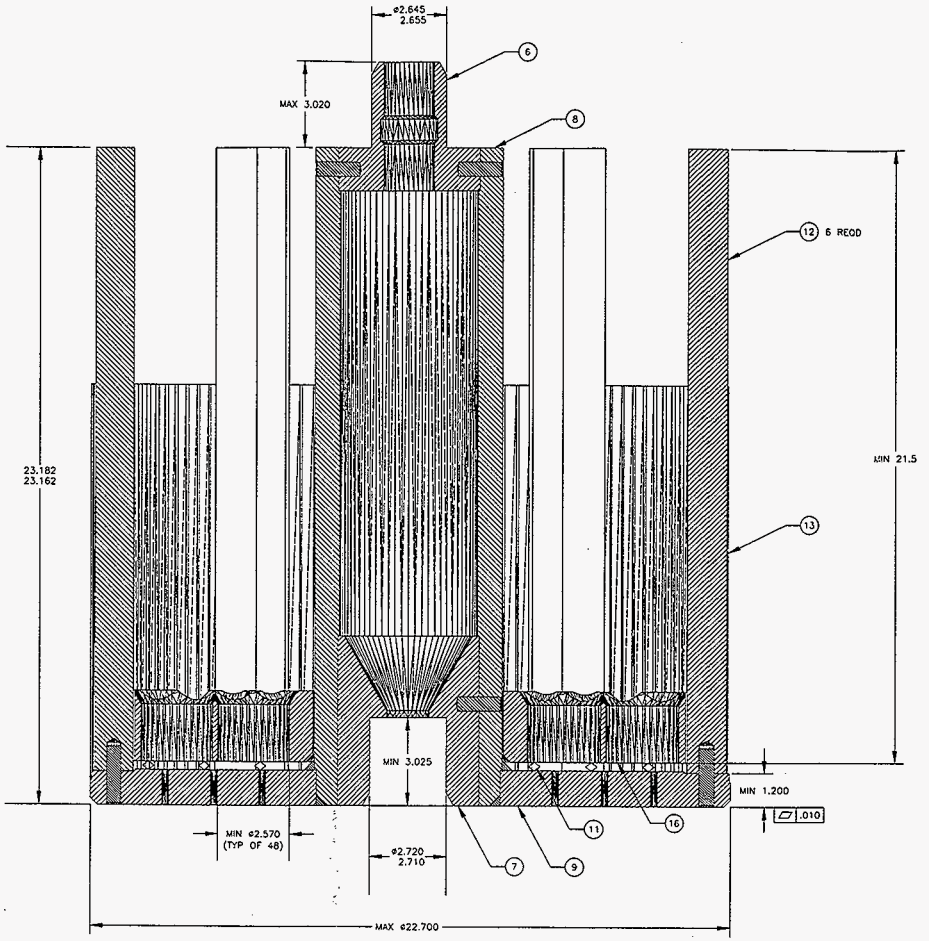

1 ASSEMBLY
SCALE: 1/2

PARTS LIST

QUANTITY REQUIRED -040	-030	-020	-010	NOMENCLATURE/DESCRIPTION	ITEM NO.
			X	ASSEMBLY	1
			1	SUBASSEMBLY, CENTER POST & BASEPLATE	2
		1		SUBASSEMBLY, CENTER POST	3
					4
					5
	1			CENTER COUPLING, BAR ROUND ø 5" X 4.5"L	6
	1			CENTER BUSHING, BAR ROUND ø 5" X 6"L	7
	1			CENTER POST, PIPE ø 6" SCHD XXS (0.864 WALL) SMLS	8
		1		BOTTOM PLATE 1.125" THK ø 24"	9
					10
			1	SPACER, AL 5005H-34 EXPANDED METAL 0.300" THK	11
			6	OUTSIDE POST, CUSTOM TRAPEZOID	12
			AR	SHROUD, SHEET METAL 18(.048" THK) GA X 14" X 71"L	13
			6	.500 COILED TYPE SPRING PIN X 2.0" LONG	14
	5			.500 COILED TYPE SPRING PIN X 1.5" LONG	15
			1	FUEL RACK, CAST OR WROUGHT ALUMINUM	16

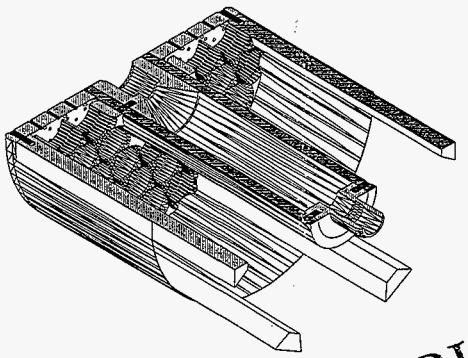

ORIGINAL

[redacted]
HNF-SD-SNF-DR-003, Rev. 0
Appendix 19

DWG NO	TITLE	REFERENCES
	DRAWING TRACEABILITY LIST	H-2-828060 MK1A STORAGE BASKET REF NUMBER TITLE
		NEXT USED ON H-2-828041

REVISIONS

DESCRIPTION	ECN

CADFILE CRTDMSTR CADCODE WIN95:ACD3-13.0:SS

U.S. DEPARTMENT OF ENERGY
Richland Operations Office
DE&S HANFORD, INC.

K-BASIN SNF
MK1A STORAGE BASKET
CRITICAL DIMENSIONS

DRAWN BY J.D. OSTERLOH 10-3-97
CHECKED 10 October 97
ENGR
QUAL ENGR
DOE APPR
PROJ MGR
PROJ ENGR
DOE APPR

F 105K 2452 SKETCH 5 0
SHOWN 1:1 SHEET 4 OF 7

2 PLOT SCALE: 1=1 A19-A8-5 1 GTITLE.DWG (10/96)

SKETCH 5 REV 0 SH 4 OF 7

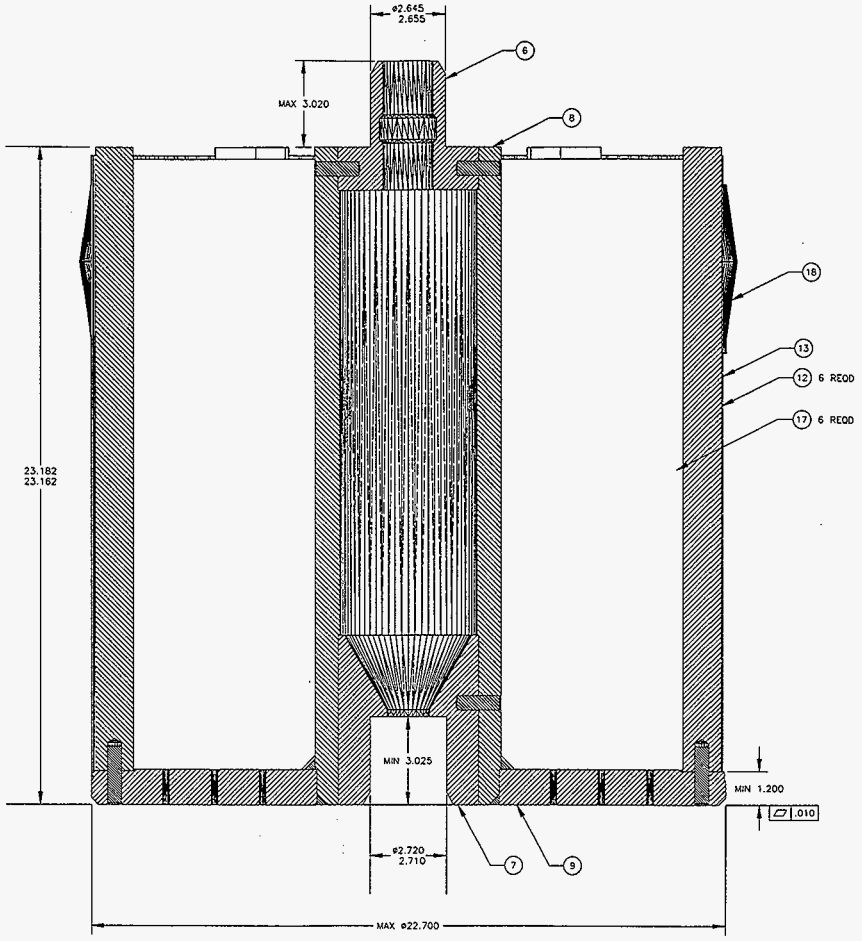

1 ASSEMBLY
SCALE: 1/2

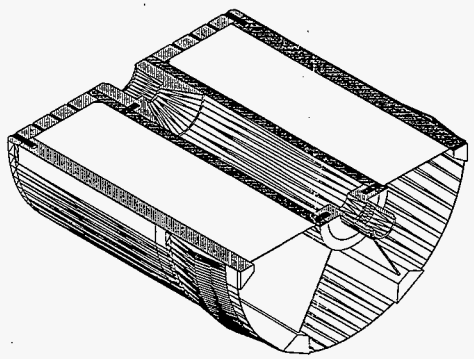

ORIGINAL

PARTS LIST

QUANTITY REQUIRED -040	-030	-020	-010	NOMENCLATURE/DESCRIPTION	ITEM NO.
			X	ASSEMBLY	1
		X	1	SUBASSEMBLY, CENTER POST & BASEPLATE	2
	X	1		SUBASSEMBLY, CENTER POST	3
					4
					5
	1			CENTER COUPLING, BAR ROUND ø 5" X 4.5"L	6
	1			CENTER BUSHING, BAR ROUND ø 5" X 6"L	7
	1			CENTER POST, PIPE ø 6" SCHD XXS (0.864 WALL) SMLS	8
		1		BOTTOM PLATE 1.125" THK ø 24"	9
					10
			1	SPACER, AL 5005H-34 EXPANDED METAL 0.300" THK	11
			6	OUTSIDE POST, CUSTOM TRAPEZOID	12
			AR	SHROUD, SHEET METAL 18(.048" THK) GA X 14" X 71"L	13
			6	.500 COILED TYPE SPRING PIN X 2.0" LONG	14
	5			.500 COILED TYPE SPRING PIN X 1.5" LONG	15
					16
			6	DIVIDER, SHEET METAL 12GA(.105" THK) X 6.45" X 21.5"	17
			AR	SEAL, SHEET METAL 30GA(.0125" THK) X 6" X 71"	18

[redacted]
HNF-SD-SNF-DR-003, Rev. 0
Appendix 19

DWG NO	TITLE	REF NUMBER	TITLE
		H-2-828065	MK1A SCRAP BASKET
DRAWING TRACEABILITY LIST		NEXT USED ON H-2-828041	REFERENCES

REVISIONS

CADFILE CRTDMSCR | CADCODE WIN95:ACD3:13 0:SS

DRAWN BY J. D. OSTERLOH 5-7-97
CHECKED 5/15/97
DATE 5/13/97
5-17-97
5-17-97

U.S. DEPARTMENT OF ENERGY
Richland Operations Office
DE&S HANFORD, INC.

K-BASIN SNF
MK1A SCRAP BASKET
CRITICAL DIMENSIONS

SIZE F | BLDG NO 105K | INDEX NO 2452 | DWG NO SKETCH 6 | REV 0
SCALE SHOWN | SHEET 5 OF 7

2 PLOT SCALE: 1=1 | A19-A8-6 | GTITLE.DWG (10/96)

DWG NO SKETCH 6 | SH 5 OF 7 | REV 0

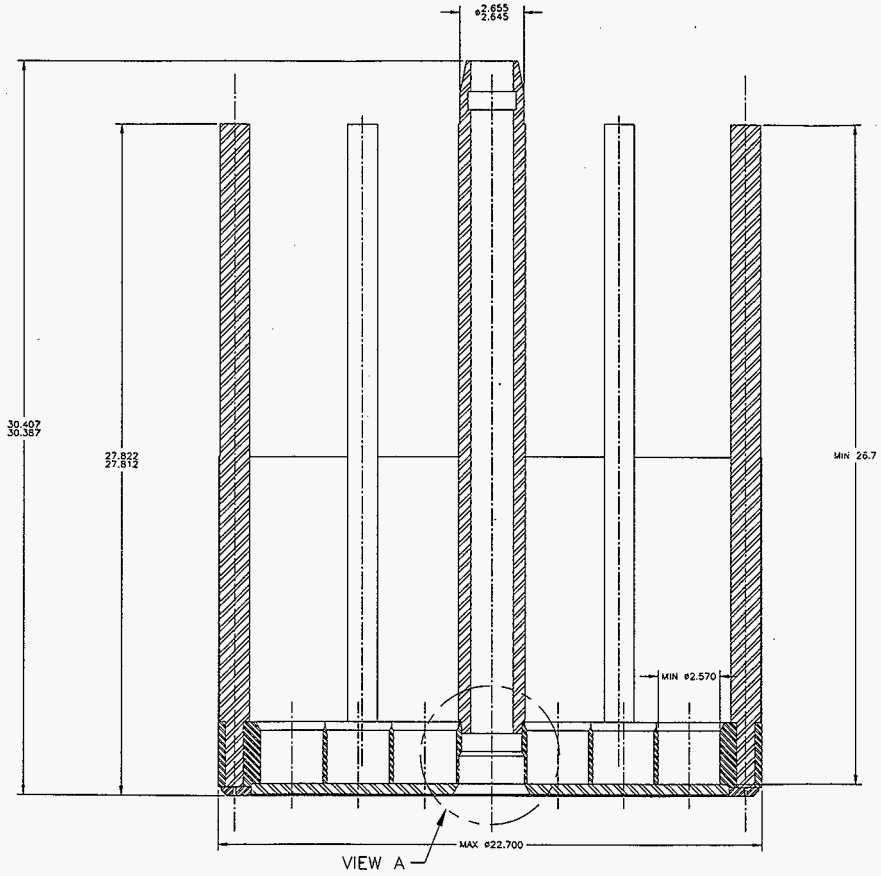

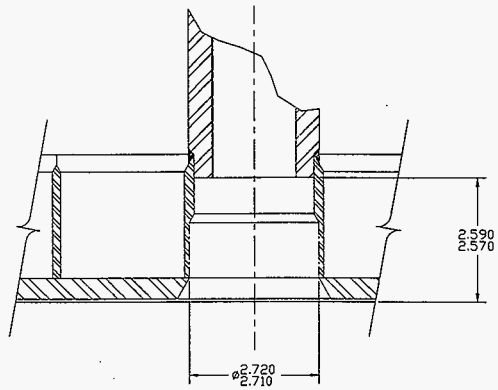

VIEW A

ORIGINAL

1. IN THE EVENT THAT A CONFLCT EXISTS BETWEEN THE CRITICAL DIMENSION TABLES/SKETCHES AND THE DESIGN DRAWINGS, THE BUYER SHALL BE NOTIFIED IMMEDIATELY FOR RESOLUTION.

[redacted]
HNF-SD-SNF-DR-003, Rev. 0
Appendix 19

DWG NO	TITLE	REF NUMBER	TITLE
DRAWING TRACEABILITY LIST		NEXT USED ON	REFERENCES

REVISIONS

CADFILE BSKETCHH CADCODE WIN95:ACD2:13.0:SS

BT BECKER 5/20/97

U.S. DEPARTMENT OF ENERGY
Richland Operations Office
Duke Engineering & Services Hanford, Inc.

MCO MK IV SNF
FUEL BASKET
CRITICAL DIMENSIONS

SKETCH 8 0

PARSONS I & T, INC SCALE SHOWN SHEET 6 OF 7

2 PLOT SCALE: 1=1 A19-A8-7 1 GTITLE.DWG (10/96)

DWG NO SKETCH 8 SH 6 OF 7 REV 0

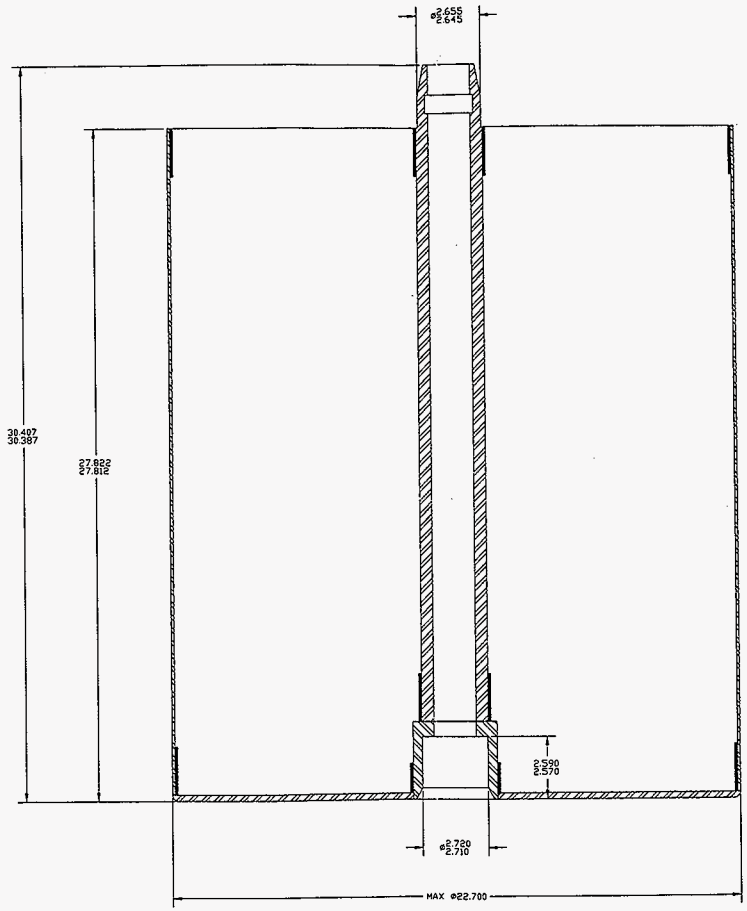

ORIGINAL

1. IN THE EVENT THAT A CONFLCT EXISTS BETWEEN THE CRITICAL DIMENSION TABLES/SKETCHES AND THE DESIGN DRAWINGS, THE BUYER SHALL BE NOTIFIED IMMEDIATELY FOR RESOLUTION.

[redacted]
HNF-SD-SNF-DR-003, Rev. 0
Appendix 19

BT BECKER 5/28/97

U.S. DEPARTMENT OF ENERGY
Richland Operations Office
Duke Engineering & Services Hanford, Inc.

MCO MK IV SNF
SCRAP BASKET
CRITICAL DIMENSIONS

SKETCH 9 0

PARSONS I & T, INC SHOWN SHEET 7 of 7

DWG NO TITLE REF NUMBER TITLE
DRAWING TRACEABILITY LIST NEXT USED ON REFERENCES

REVISIONS
CADFILE BSKETCHJ CADCODE WIN95:ACD2-13.0:SS

2 PLOT SCALE: 1=1 A19-A8-8 1 GTITLE.DWG (10/96)

DISTRIBUTION SHEET

To	From	Page 1 of 1
Distribution	SNF Storage Projects	Date 05/27/97
Project Title/Work Order		EDT No. 620106
Multi-Canister Overpack Design Report		ECN No. N/A

Name	MSIN	Text With All Attach.	Text Only	Attach./ Appendix Only	EDT/ECN Only
W. C. Alaconis	R3-85		X (with Appendix 1, 16, 17, & 19)		
G. D. Bazinet	S8-06		X (with Appendix 1, 16, & 19)		
D. M. Chenault	R3-86	X			
S. R. Crow	H1-15		X (with Appendix 1, 16, & 19)		
J. I. Diehl	X3-80	X			
J. R. Frederickson	R3-86	X			
L. H. Goldmann (2)	R3-86	X			
J. J. Irwin	R3-86		X (with Appendix 1, 16, & 19)		
A. T. Kee	R3-86		X (with Appendix 1, 16, & 19)		
B. D. Lorenz	R3-11	X			
C. R. Miska	R3-86	X			
R. P. Omberg	R3-86		X (with Appendix 1, 16, & 19)		
R. W. Rasmussen	R3-86	X			
E. S. Ruff	H5-70	X			
E. J. Shen	X3-75		X (with Appendix 1, 16, & 19)		
K. E. Smith (2)	R3-86	X			
C. E. Swenson	S8-07		X (with Appendix 1, 16, & 19)		
C. A. Thompson	R3-85		X (with Appendix 1, 16, 17, & 19)		
SNF Project File	R3-11	X			
Central Files (2)	A3-88	X			