RECEIVED
JAN 16 1997
OSTI

CONF-9609102--4
ANL/ES/CP--91796

OXYGEN-BLOWN GASIFICATION COMBINED CYCLE: CARBON DIOXIDE RECOVERY, TRANSPORT, AND DISPOSAL

R.D. DOCTOR, J.C. MOLBURG, and P.R. THIMMAPURAM

Argonne National Laboratory
9700 South Cass Avenue
Argonne, Illinois 60439

The submitted manuscript has been authored by a contractor of the U. S. Government under contract No. W-31-109-ENG-38. Accordingly, the U. S. Government retains a nonexclusive, royalty-free license to publish or reproduce the published form of this contribution, or allow others to do so, for U. S. Government purposes.

MASTER

This work is supported by the U.S. Department of Energy, Morgantown Energy Technology Center, through contract W-31-109-Eng-38 (contract manager, Dr. Richard A. Johnson).

DISTRIBUTION OF THIS DOCUMENT IS UNLIMITED

DISCLAIMER

Portions of this document may be illegible in electronic image products. Images are produced from the best available original document.

OXYGEN-BLOWN GASIFICATION COMBINED CYCLE: CARBON DIOXIDE RECOVERY, TRANSPORT, AND DISPOSAL

R.D. DOCTOR, J.C. MOLBURG, and P.R. THIMMAPURAM

Argonne National Laboratory, 9700 South Cass Avenue,
Argonne, Illinois 60439

ABSTRACT

This project emphasizes CO_2-capture technologies combined with integrated gasification combined-cycle (IGCC) power systems, CO_2 transportation, and options for the long-term sequestration of CO_2. The intent is to quantify the CO_2 budget, or an "equivalent CO_2" budget, associated with each of the individual energy-cycle steps, in addition to process design capital and operating costs. The base case is a 458-MW (gross generation) IGCC system that uses an oxygen-blown Kellogg-Rust-Westinghouse (KRW) agglomerating fluidized-bed gasifier, bituminous coal feed, and low-pressure glycol sulfur removal, followed by Claus/SCOT treatment, to produce a saleable product. Mining, feed preparation, and conversion result in a net electric power production for the entire energy cycle of 411 MW, with a CO_2 release rate of 0.801 kg/kWhe. For comparison, in two cases, the gasifier output was taken through water-gas shift and then to low-pressure glycol H_2S recovery, followed by either low-pressure glycol or membrane CO_2 recovery and then by a combustion turbine being fed a high-hydrogen-content fuel. Two additional cases employed chilled methanol for H_2S recovery and a fuel cell as the topping cycle, with no shift stages. From the IGCC plant, a 500-km pipeline takes the CO_2 to geological sequestering. For the optimal CO_2 recovery case, the net electric power production was reduced by 37.6 MW from the base case, with a CO_2 release rate of 0.277 kg/kWhe (when makeup power was considered). In a comparison of air-blown and oxygen-blown CO_2-release base cases, the cost of electricity for the air-blown IGCC was 56.86 mills/kWh, while the cost for oxygen-blown IGCC was 58.29 mills/kWh. For the optimal cases employing glycol CO_2 recovery, there was no clear advantage; the cost for air-blown IGCC was 95.48 mills/kWh, and the cost for the oxygen-blown IGCC was slightly lower, at 94.55 mills/kWh.

KEYWORDS

Gasification; combined cycle; IGCC; life cycle; supercritical CO_2; pipeline.

OVERVIEW OF ENERGY CYCLE FOR INTEGRATED COMBINED-CYCLE BASE CASE

The energy system definition for this study extends from the coal mine to the final geological repository for the CO_2. The location of the IGCC plant is specified as the midwestern United States; in the studies conducted (Doctor et al., 1994; 1996), it is assumed that the plant is 160 km by rail from the mine. Details of the IGCC portion of the system are taken from Gallaspy (1990a), who describes an electric power station using an O_2-blown KRW gasifier, while a follow-up report (Gallaspy 1990b) describes a plant using an air-blown KRW gasifier with in-bed sulfur removal. In each case studied, the CO_2 recovery technologies have

been integrated into plant design as much as possible to limit efficiency losses. For each part of the energy system, CO_2 emissions have been either computed directly from process stream compositions or calculated from energy consumption on the basis of a "CO_2 equivalence" of 1 kilogram of CO_2 per kilowatt-hour (electric) (kg/kWhe). In this way, a total CO_2 budget for the system can be derived and compared with the total CO_2 budget for other options, thereby taking into account effects outside the immediate plant boundary.

All seven cases presented here have been adjusted to be on a consistent basis of 4,110 tons/d (stream day) of Illinois No. 6 coal from the Old Ben No. 26 mine. This bituminous, 2.5%-sulfur coal contains 9.7% ash. The underground mine is associated with a coal preparation plant. The assumption is that the IGCC power plant is 160 km from the mine and the coal is shipped by rail on a unit train. The impact of coal mining and shipment on the energy budget is 2.41 MW of power use and 2,879 kg/h of CO_2 emissions. Limestone is used for in-bed sulfur capture in the two air-blown gasifier cases.

The coal preparation system for the O_2-blown IGCC plant includes equipment for unloading the coal from the unit train, passing it through magnetic separators, and then send it to a hammermill. From there, the coal is conveyed to storage silos, from which it is recovered in a fluidized stream for use in the gasifier. The coal is not dried for the O_2-blown cases. The impact of coal preparation on the energy budget is 0.85 MW of power use, with no CO_2 emissions (these will be combined with the overall emissions from the IGCC plant). Drying the coal was not considered for this case.

In contrast, the coal preparation system for the air-blown IGCC plant includes drying by the hot (760°C) flue gas from the IGCC sulfator process. This drying results in CO_2 being emitted from the energy cycle that is not reclaimed and presents a possible opportunity for further reduction. Energy use for coal and limestone preparation is 3.49 MW.

Gasifier Island

The O_2-blown base case employs an air-separation plant producing 1,900 t/d of 95% oxygen. The KRW process is an O_2-blown, dry-ash, agglomerating, fluidized-bed process. Three parallel gasifier trains operating at 3,100 kP/a and 1,010°C are included in the design. Following gasification, cyclones recover 95% of the fines; gas cooling and high-efficiency particulate removal follow. For the base case, glycol H_2S recovery provides a feed to a conventional Claus tail-gas cleanup system. Hence, the significant differences between the O_2-blown and air-blown cases are that the O_2-blown cases cool the product gas for sulfur cleanup and produce a sulfur product for the market, while the air-blown cases employ hot-gas cleanup and produce a landfill product. The impact of the gasifier island operation on the energy budget is 36.82 MW of power use and 6,153 kg/h of CO_2 emissions for the O_2-blown base case.

The air-blown base case uses in-bed sulfur removal. Spent limestone and ash from the gasifier are oxidized in an external sulfator before disposal. The sulfator flue gas is taken to the coal preparation operation for drying coal and not integrated into the later CO_2 recovery operation. The hot-gas cleanup system for particulate matter consists of a cyclone followed by a ceramic-candle-type filter. Solids collected are sent to the external sulfator before disposal. Inlet gas temperatures are maintained at approximately 280°C. Supplemental hot-gas desulfurization is accomplished in a fixed-bed zinc-ferrite system. Off-gas from the regeneration of this polishing step is recycled to the gasifier for in-bed sulfur capture. The impact of the gasifier island operation on the energy budget is 20.12 MW of power use and 137 kg/h of CO_2 emissions for the air-blown base case.

Power Island

Both the O_2-blown and air-blown base cases employ a turbine topping cycle and a steam bottoming cycle based on two heavy-duty GE MS701F industrial gas turbines with a 680°C firing temperature. The impact

on the energy budget of the power island operation is 7.02 MW of power use for the O_2-blown base case and 10.58 MW of power use for the air-blown base case. For the O_2-blown base case, gross power generation is 458.20 MW, with a net generation of 413.50 MW; for the air-blown base case, gross power generation is 479.63 MW, with a net generation of 445.44 MW.

INTEGRATED GASIFICATION COMBINED CYCLE WITH CO_2 RECOVERY

Several changes were made to the base-case IGCC plant to incorporate CO_2 recovery. For the turbine topping-cycle studies (Cases 1 and 2), these changes entailed processing the cleaned fuel gas through a "shift" reaction to convert the CO to CO_2, recovering the CO_2, and then combusting the low-CO_2 fuel gas in a modified turbine/steam cycle to produce electricity. Gas cleaning and sulfator performance were considered to be unaffected by these changes. In contrast, the fuel cell topping-cycle studies (Cases 3 and 4) required a highly cleaned gasifier without use of the water-gas shift reaction to be used by the fuel cells. A block diagram of the O_2-blown IGCC system with CO_2 recovery appears in Fig. 1.

The fuel gas from the KRW process is high in CO. Conversion of the CO to CO_2 in the combustion process would result in substantial dilution of the resulting CO_2 with nitrogen from the combustion air and with water from the combustion reaction. If the CO_2 is removed before combustion, a substantial savings in the cost of the CO_2 recovery system is possible because of reduced vessel size and solvent flow rate. The CO in the fuel gas must first be converted to CO_2 by the shift reaction, so that the resulting CO_2 can then be recovered, leaving a hydrogen-rich fuel for use in the gas turbine. The shift reaction is commonly

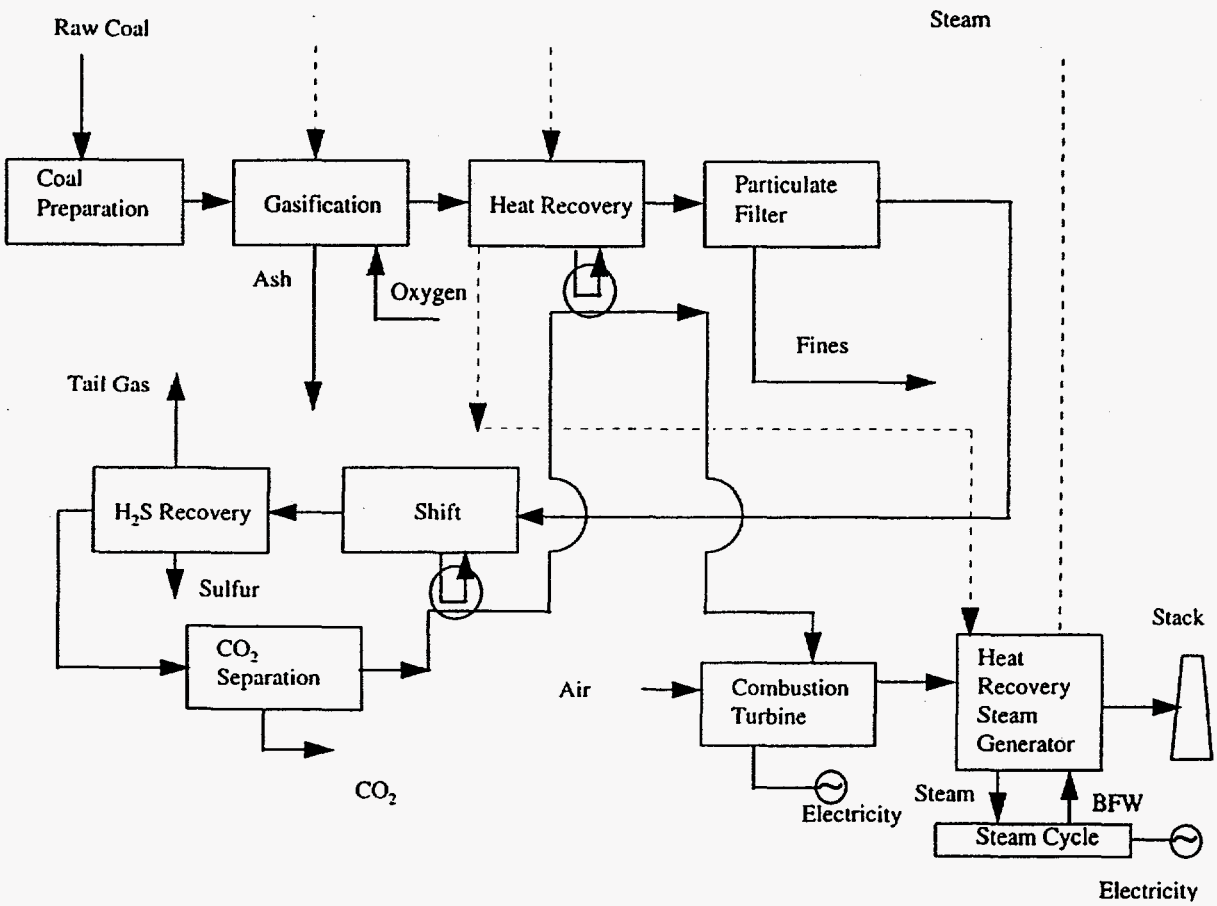

Fig. 1 Block Diagram of the Base-Case Oxygen-Blown KRW IGCC System Modified for CO_2 Recovery (Doctor et al. 1996)

accomplished in a catalyst-packed tubular reactor that uses a relatively low-cost iron-oxide catalyst. High CO_2 recovery is best achieved by staged reactors that allow for cooling between stages; a two-stage system configured to achieve 95% conversion of CO to CO_2 was found to be optimal.

Commercial CO_2-removal technologies all involve cooling or refrigerating the gas stream, with an attendant loss of thermal efficiency. To minimize the loss, the heat removed during cooling must be recovered and integrated into the system. Several options for this integration were evaluated, including steam generation alone, fuel-gas preheating with supplemental steam generation, and fuel-gas saturation and preheating. In the last case, moisture condensed from the fuel gas before CO_2 recovery is injected into the clean fuel-gas stream as it is heated by recovered heat following CO_2 removal. This option allows additional heat to be absorbed before combustion and increases the mass flow rate through the gas turbine. The balance of the thermal energy is used in the heat recovery steam generator for feedwater heating and steam generation.

For the optimal O_2-blown CO_2 recovery case (Case 1), the net electric power production was reduced by 37.6 MW from the base case, with a 0.277-kg/kWhe CO_2 release rate (when makeup power was considered). The low-pressure glycol system, which does not require compression of the synthesis gas before absorption, appears to be the best system of those studied.

PIPELINE TRANSPORT AND SEQUESTERING OF CO_2

Once the CO_2 has been recovered from the fuel-gas stream, its transportation, utilization, and/or disposal is assumed to be at supercritical pipeline pressures, so that it can be directly received in a geological repository. Costs for pipeline construction and use vary greatly by region within the United States. The recovered CO_2 represents more than three million normal cubic meters per day of gas volume. It is assumed that the transport and sequestering process releases approximately 2% of the recovered CO_2.

Levelized costs have been prepared, taking into account that the power required for compression will rise throughout the life cycle of these sequestering reservoirs. The first reservoirs to be used will, in fact, be capable of accepting all IGCC CO_2 gas for a 30-year period without requiring any additional compression costs for operation. The pipeline transport and sequestering process represents approximately 26 mills/kWh for the CO_2-recovery cases.

ENERGY CONSUMPTION AND ECONOMICS

Data on energy consumption and CO_2 emissions for the O_2-blown base case are provided in Table 1. These data can be compared with those for the optimal case that employs low-pressure glycol CO_2 recovery and a turbine topping cycle (i.e., Case 1), also provided in Table 1. A comparison of the costs of electricity for the CO_2-release base cases revealed that the cost for air-blown IGCC was 58.29 mills/kWh, while the cost for the O_2-blown case was 56.86 mills/kWh (Table 2). There was no clear advantage for the optimal cases employing glycol CO_2 recovery; the cost for air-blown IGCC was 95.48 mills/kWh, and the cost for the O_2-blown case was slightly lower, at 94.55 mills/kWh.

ACKNOWLEDGMENT

This work is supported by the U.S. Department of Energy, Morgantown Energy Technology Center, through contract W-31-109-Eng-38 (contract manager, Dr. Richard A. Johnson).

Table 1. Energy Consumption and CO_2 Emissions (Doctor et al. 1996)

Base Case - KRW O2-blown IGCC

	Electricity MW	CO2 release kg/h
Mining and Transport		
Raw Coal in Mine	-2.36	2,356
Coal Rail Transport	-0.05	523
Subtotal	-2.41	2,879
IGCC Power Plant		
Coal Preparation	-0.85	0
Gasifier Island	-36.82	6,153
Power Island	-7.02	320,387
Subtotal	-44.70	326,540
Power - Gas Turbine	298.80	
Power - Steam Turbine	159.40	
GROSS Power	458.20	
NET Power	413.50	
Pipeline/Sequester	0.00	0
Energy Cycle Power Use	-47.11	
NET Energy Cycle	411.09	329,419
CO2 emission rate/net cycle	0.801	kg CO2/kWh
Power use/CO2 in reservoir	N/A	kWh/kg CO2

Case #1 KRW O2-blown IGCC - Shift; Glycol H2S/CO2; Gas Turbine

	Electricity MW	CO2 release kg/h
Mining and Transport		
Raw Coal in Mine	-2.36	2,356
Coal Rail Transport	-0.05	523
Subtotal	-2.41	2,879
IGCC Power Plant		
Coal Preparation	-0.85	0
Gasifier Island	-36.82	6,153
Power Island	-7.02	320,387
Glycol Circulation	-5.80	-260,055
Glycol Refrigeration	-4.50	
Power Recovery Turbines	3.40	
CO2 Compression (to 2100psi)	-17.30	
Subtotal	-68.90	66,485
Power - Gas Turbine	284.80	
Power - Steam Turbine	161.60	
GROSS Power	446.40	
NET Power	377.50	
Pipeline/Sequester		
Pipeline CO2		260,055
Pipeline booster stations	-1.64	1,637
Geological reservoir (2% loss)	0.00	-254,854
Subtotal	-1.64	6,839
Energy Cycle Power Use	-72.95	
NET Energy Cycle	373.45	76,202
Derating from O2-Base Case	37.64	
Make-up Power	37.64	37,637
TOTAL	411.09	113,840
CO2 emission rate/net cycle	0.277	kg CO2/kWh
Power use/CO2 in reservoir	0.148	kWh/kg CO2

REFERENCES

Doctor, R.D., J.C. Molburg, and P.R. Thimmapuram, 1996, *KRW Oxygen-Blown Gasification Combined Cycle: Carbon Dioxide Recovery, Transport, and Disposal*, ANL-ESD-34, Argonne National Laboratory, Argonne, Ill.

Doctor, R.D., J.C. Molburg, P.R. Thimmapuram, G.F. Berry, and C.D. Livengood, 1994, *Gasification Combined Cycle:Carbon Dioxide Recovery, Transport, and Disposal*, ANL/ESD-24, Argonne National Laboratory, Argonne, Ill.

Gallaspy, D.T., T.W. Johnson, and R.E. Sears, 1990a, *Southern Company Services' Study of a KRW-Based GCC Power Plant*, EPRI GS-6876, Electric Power Research Institute, Palo Alto, Calif.

Gallaspy, D.T., 1990b, *Assessment of Coal Gasification/Hot Gas Cleanup Based Advanced Gas Turbine Systems: Final Report*, DOE/MC/26019.3004 (DE91002084), prepared by Southern Company Services, Inc., Birmingham, Ala., et al., for U.S. Department of Energy, Morgantown Energy Technology Center, Morgantown, W. Va.

Table 2. Summary of Comparative Costs of IGCC Systems (Doctor et al. 1996)

Case		BASE	BASE	Case #1	Case #2	Case#3	Case #4	ESD-24/Glycol
Gasifier Oxidant		Oxygen	Air	Oxygen	Oxygen	Oxygen	Oxygen	Air
H2S Recovery		Glycol	In-Bed/ZnTi	Glycol	Glycol	Methanol	Methanol	In-Bed/ZnTi
CO2 Recovery		none	none	Glycol	Membrane	Glycol	Membrane	Glycol
Topping Cycle		Turbine	Turbine	Turbine	Turbine	Fuel Cell	Fuel Cell	Turbine
Bottoming Cycle		Steam	Steam	Steam	Steam	Steam	Steam	Steam
Component	Unit							
Base Plant Capital	$/kW	$1,332	$1,253	$1,485	$1,703	$2,560	$2,746	$1,487
CO2 Control Capital	$/kW	$0	$0	$202	$602	$145	$905	$246
Total Plant Capital	$/kW	**$1,332**	**$1,253**	**$1,687**	**$2,305**	**$2,705**	**$3,651**	**$1,733**
Power Plant Annual Cost	$K	$137,253	$144,212	$203,238	$242,336	$249,786	$287,547	$204,288
Power Cost								
Base Plant Power Cost	mills/kWh	58.29	56.86	70.64	101.62	102.45	132.19	71.46
Pipeline Cost	mills/kWh	0	0	23.91	27.35	26.53	28.76	24.02
Net Power Cost	mills/kWh	**58.29**	**56.86**	**94.55**	**128.97**	**128.98**	**160.95**	**95.48**
Coal Energy Input	10^6Btu/h	3839	3839	3839	3839	3839	3839	3839
Gross Power Output	MW	458.20	479.63	446.40	417.60	418.50	413.20	460.88
In Plant Power Use	MW	44.70	34.19	68.90	87.60	78.39	99.40	85.11
Net Plant Output	MW	**413.50**	**445.44**	**377.50**	**330.00**	**340.11**	**313.80**	**375.77**
Net Heat Rate	Btu/kWh	9284	8618	10170	11633	11288	12234	10216
Thermal Efficiency - HHV	%	36.78%	39.62%	33.58%	29.35%	30.25%	27.91%	33.42%
Out of Plant Power Use	MW	2.41	4.18	4.05	3.87	4.05	4.12	4.47
Net Energy Cycle Power	MW	**411.09**	**441.26**	**373.45**	**326.13**	**336.06**	**309.68**	**371.30**
Net Energy Cycle Heat Rate	Btu/kWh	9339	8700	10280	11771	11424	12397	10339
Thermal Efficiency - HHV	%	36.56%	39.25%	33.21%	29.01%	29.89%	27.54%	33.02%
Net Energy Cycle Power	MW	411.09	441.26	373.45	326.13	336.06	309.68	371.30
Net Replacement [Added] Power	MW	0.00	(30.17)	37.64	84.96	75.03	101.41	39.79
Net Grid Power	MW	**411.09**	**411.09**	**411.09**	**411.09**	**411.09**	**411.09**	**411.09**