AUTEX Research Journal, Vol. 10, No2, June 2010 © AUTEX

EMPLOYING VISUALISATION TECHNIQUES AND TOOLS FOR EDUCATIONAL PURPOSES IN TEXTILE STUDIES

Zoran Stjepanovic, Darinka Fakin

University of Maribor, Faculty of Mechanical Engineering
Department of Textile Materials and Design, SI-2000 Maribor, Slovenia
stjepanovic@uni-mb.si

Abstract:

Modern textile and clothing manufacturers can today use the entire range of conventional CAD/CAM systems together with new computer graphics and Internet-based technologies in order to strengthen their position on the market, building a completely new electronic-business offer. Graphical presentation of textile products and processing, or visualisation, presents a promising technology that can be treated as a potential enrichment of conventional computer aided technologies used today by the majority of advanced producers of textile fabrics, clothing, and other textile products. The article presents the results of research on designing computer software for visualising the fabric dyeing process. The program package produced enables the effective visualisation of two fabric dyeing processes: a Pad-Batch machine line for dyeing flat textiles in open-width state, and an HT overflow dyeing machine for fabric dyeing in rope form. Graphical applications of both dyeing processes can be used for both industrial and educational purposes. In this article, we focus more on presenting the program structure and functionalities for using the software to support the education of textile students.

Key words:

Textile fabrics, dyeing process, visualisation, textile engineering, education.

Introduction

In the last twenty years, computer graphics have been successfully used to support design and construction tasks in many textile applications. Above all, the design and construction of woven and knitted fabrics and apparel products have been supported by the use of specially designed computer based information systems. Visualisation of textile processes has not received so much attention. One of the reasons for this is that visualisation of the process is not as interesting and attractive for textile producers and buyers as the textile product itself. On the other hand, such a visualisation is of great importance for educational purposes because of its potential to effectively and clearly show the students the technology and processes used in the production of textiles.

Recent Developments in Visualisation of Textile Products and Processes

Visualisation of Textile Fabrics and Garments

The microscopic appearance of textile products - fabrics and garments - has not received much attention until recently. Research into computer graphics suitable for textiles has focused mainly on the modelling and rendering of the macroscopic structure of woven textiles. In addition, knitted textiles have been successfully modelled and effectively presented graphically only a few years ago because of their very complex physical behaviours. The textile industry on the other hand would clearly benefit from the ability to visualise the whole diversity of textiles: not only the macroscopic mechanical behaviour of all types of garments, but also realistic microscopic visual properties. Specific problems appearing when visualising the knitted materials are much more complex than for woven materials, and therefore we can conclude that the knitted fabric model is a more general model of flat textile structures.

Different approaches to dealing with the fabric drape model have been made [1-3]. When simulating the draping of textiles, one has to deal with subtle, but important, differences between knitted and woven fabrics regarding the arising force functions.

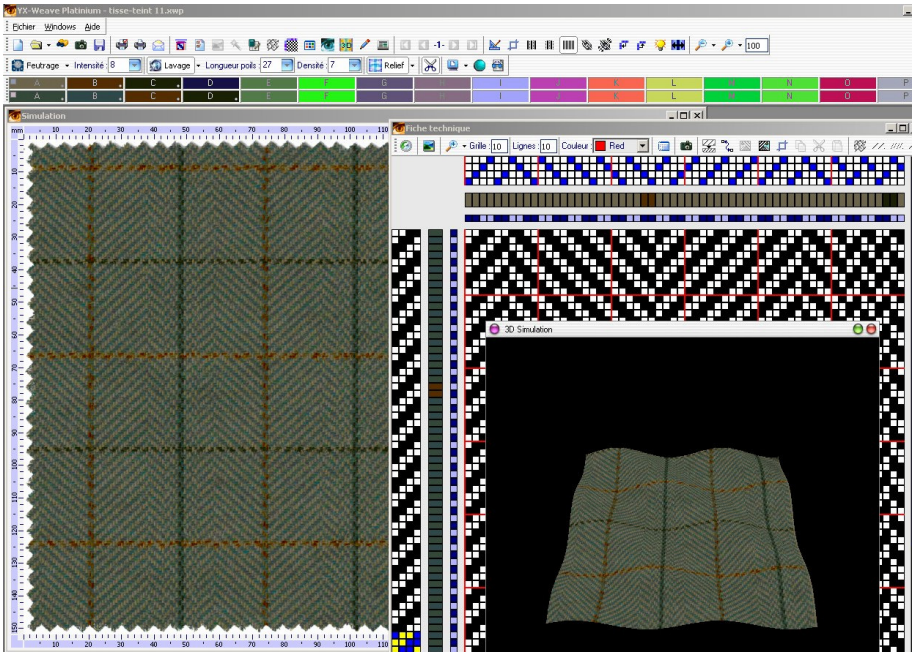

Figure 1. 2D and 3D representations of a woven fabric.

To describe the draping of the flat textile structures, such as woven or knitted fabrics, the particle system approach or another suitable model is usually adapted [2,4]. Figure 1 shows 2D and 3D representations of a woven fabric [5]. A 3D representation of a shaped knitted fabric is shown in Figure 2 [6].

Figure 2. 3D representation of a shaped knitted fabric.

In order to perform a draping simulation, the textile structure is represented by mesh-elements, rectangular sections of garment. Mass points (or particles) are then set at the corners of the mesh-elements defining the couplings between the mass points. This organisation gives a fairly standard system of coupled particles and may be treated as in any other physically based modelling system.

In order to enable and support the whole range of e-business activities, universities, research institutions, and software producers have developed dedicated software packages. Numerous apparel CAD systems have made-to-measure or pattern alteration functions which can be used in concert with the scanner based measurements to create a custom pattern for the customer. The measurements are formatted specifically for the target apparel CAD package so that the input of the data to the system and the output of the made-to-measure pattern, either to a fabric cutter or to a plotter, occur automatically. Additionally, the possibility exists for the customer to view the fit and appearance of both made-to-measure and standard-sized garments as a computer simulation (a virtual try-on). The garment is draped on the customer's 3D scan image, and he or she can see how the garment looks and fits before the purchase is made [7]. In Figure 3 the visualisation of pre-positioned and sewn garments can be seen [8].

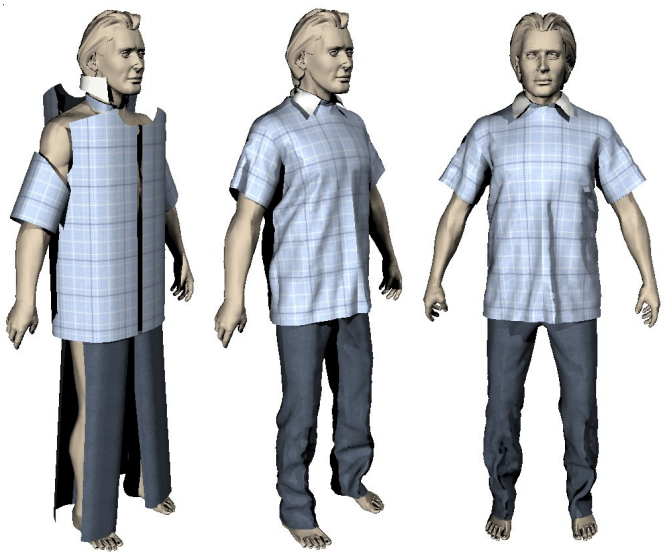

Figure 3. Visualisation of pre-positioned and sewn garments.

Graphical Representation of Textile Processes

Graphical representation of textile processes includes the visualisation and animation of different production processes for manufacturing linear and flat textile structures as well as garments and other 3D textile forms. Until recently, graphical representation of textile processes did not receive as much attention as visualisation and virtualisation of textile products. One of the reasons for this is that visualisation of the process is not as interesting and attractive for textile producers and buyers as the textile product itself. On the other hand, such a visualisation is of great importance for controlling and maintaining the process, as well as for educational purposes, because of its potential to effectively and clearly show students the technology and processes within the textile manufacturing chain.

Visualisation and animation techniques have greater potential for clearly representing different processes that have a continuous or semi-continuous nature. Figure 4 shows the visualisation of a sliver conveying system [9]. One frame from the animation of a precision mote knife setting system [10] is presented in Figure 5.

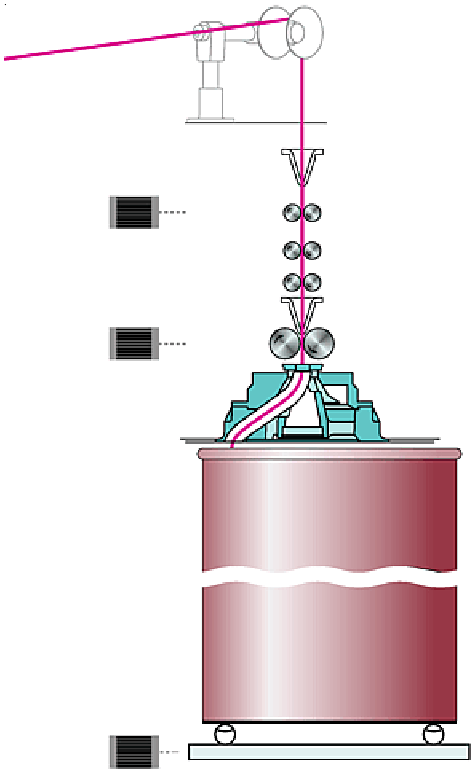

Figure 4. Visualisation of sliver conveying.

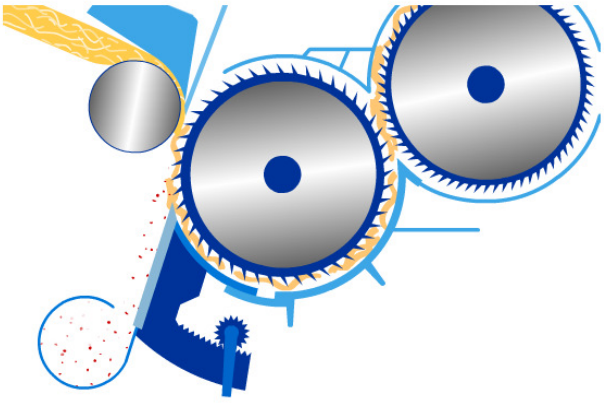

Figure 5. Animation of a precision mote knife setting system.

Results and Discussion

When planning the research, two configurations of fabric dyeing machinery were selected for visualisation: an HT overflow dyeing machine for fabric dyeing in rope form, and a semi-continuous Pad-Batch machine line for dyeing of flat textiles in open-width state. The research team involved textile specialists as well as specialists from the area of computer programming and computer graphics. Object oriented Microsoft Visual C++ programming language was used for development of the software running on personal computers using the Microsoft Windows XP operating system.

Visualising the HT overflow dyeing process

HT overflow is a piece goods dyeing process suitable for medium-weight and heavy woven and knitted fabrics, especially those made of natural fibres and blends with delicate surfaces [11]. The finished surfaces of fabrics and their handle meet high quality requirements. Because of the closed machine construction it is not easy for students to form a picture of the dyeing process and to understand it. For this reason we designed and programmed the graphical application for visualisation and animation of the HT overflow dyeing process, a practical example of which follows this text [12]. Figure 6 shows a diagram of the exhaustion dyeing process applied to pure cotton fabric having a surface mass of 200 g/m using Bezaktiv Rot HE-3B dyestuff and suitable chemicals and textile auxiliary agents. A screenshot from the program for visualisation of the HT overflow dyeing machine is shown in Figure 7.

Visualisation and Animation of the Pad-Batch Machine Line
The Pad-Batch dyeing process is one of the commonly used dyeing processes for open-width dyeing of textile fabrics that enables, among others [13]: flexible dyeing of short lots, quick changes of lot by means of a quick cleaning system, minimisation of residual liquor due to optimum trough designs, maximal dye yield, even colouration, reasonable prices, safety, reproducibility, integrated control of all process parameters such as temperature, fabric tension, moisture profile, and winding tension, optional connection of a process pilot system, and tailing correction.

As a result of our R&D work we designed and developed a computer graphics program for visualisation and animation of vital/active/moving machine elements, with the flow of the fabric through the fabric dyeing process shown. The graphic interface enables intuitive and simple use of program functions.

Potential applications of the developed program are:
- to enable the visualisation of the active dyeing machine elements,
- to enable students of textile technology and young professionals (without production experience) to get acquainted with the textile dyeing machinery and technological processes,
- to enable textile specialists dealing with the planning of technological plants to choose between different possibilities for optimal location of the machine lines.

As a higher education institution offering textile education programs, we were above all concentrating on potential related to the use of the program for pedagogical purposes, although there exist other possibilities for application of the program.

Program Functionalities

The main menus in the Pad-Batch machine line application are: Program, Animation, Library, View, and Help. Submenu functions can be selected from the charts containing selection/input fields, which enables simple, effective, and surveyable use of the program. We can easily set different process parameters, such as processing times, length, surface mass and thickness of the fabric, squeezing effect, and processing velocities. Different sound effects and colours can be used in order to enhance the clear representation of the dyeing process. Also the reset function is programmed so that it can be used to set the original (default) values.

Recipe:

A	1.0 g/L Meropan DPE
	40 g/L sodium sulphate
B	2 % Bezaktiv Rot HE-3B
C	5 g/L sodium carbonate
	2 g/L natriumhydroxyd (w=32%)
D	0.5 g/L Cotoblanc NSR

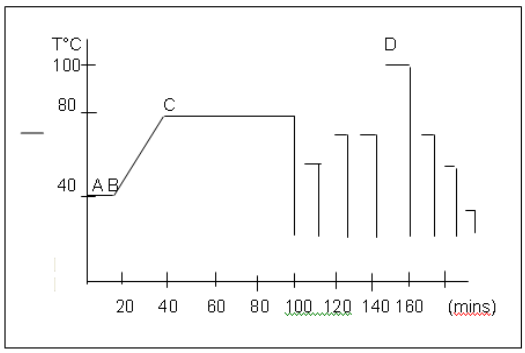

Figure 6. Diagram of exhaustion dyeing process.

Material: 100 % cotton

Fabric mass: 200 g/length meter
Fabric width: 152 cm
Fabric length: 300 m
Dye type; commercial name:
Reactive; Bezaktiv Rot HE-3B

Type of procedure: exhaustion
Liquor ratio: 8:1

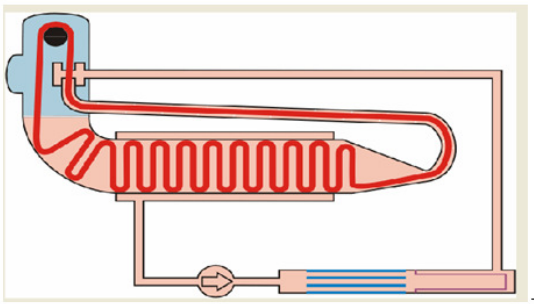

Figure 7: Screenshot from the program for visualisation of HT overflow dyeing machine.

Figures 8-11 show some of the available Pad-Batch machine line elements that can be reached from the Library menu.

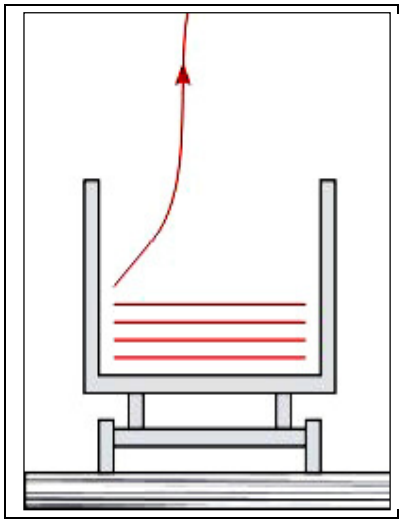

Figure 8. Fabric carriage.

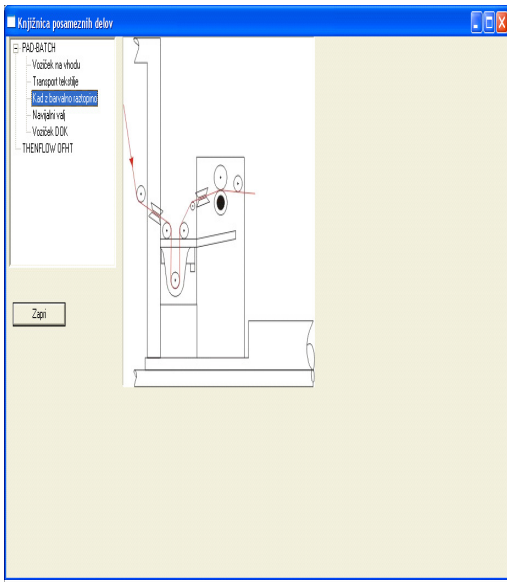

Figure 9. Impregnation in cold solution of dye and alkali.

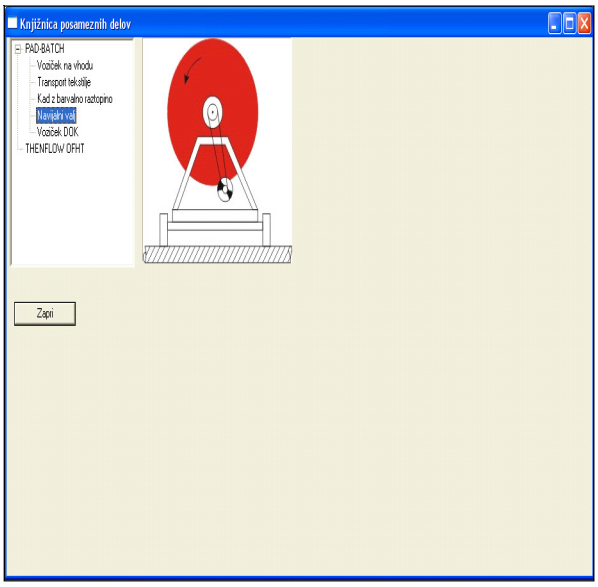

Figure 10. Batching roller.

Practical Examples for Visualisation of a Fabric Dyeing Process

An illustrative example for visualisation and animation of the Pad-Batch semi-continuous line for open-width fabric dyeing is shown in Figure 12. The three parts of the semi-continuous line - impregnation, fixation, and washing/rinsing areas - can be clearly seen. For this purpose we prepared an example of dyeing a pure cotton fabric having a surface mass of 200 g/m. In the upper part of the screen, information on the material (fabric), such as fabric thickness, surface mass, width, and length, is given, as well as the type and commercial name of the applied dye. Important processing parameters can be chosen, inputted into the program, and shown together with the recipe in the upper part of the window (Figure 12).

Future Work and Expectations

The software package designed and produced offers many possibilities for improvement and enhancement of program functionalities. In order to make the visualisation and animation of the dyeing process even more clear and understandable, we plan to include 3D representation of the vital machines/ production line parts. For this purpose, the main elements and mechanisms, particularly within the Pad-Batch machine line, will be modelled and their activity will be animated. Also, the possibility of including some already existing graphical representations and animations from acknowledged machine producers, such as Kuesters [13], exists. An example of the 3D detail - a representation of the impregnation part within the Pad-Batch machine line - is shown in Figure 13. We expect that the planned enhancement will bring the program package a new value and will therefore raise its application value.

Conclusions

Universities, research institutions, and software producers nowadays apply new computer graphics technologies in order to create advanced computer solutions that will in the future support the whole cycle starting from the virtual design of fabric and garments through automated production up to virtual merchandising.

Graphical presentation of textile products and processing, or visualisation, presents a promising technology that can be treated as a potential enrichment of conventional computer aided technologies used today by the majority of advanced producers of textile fabrics, clothing, and other textile products. The results of R&D work on designing computer software for visualising the fabric dyeing process were presented in this article. The developed program package enables an effective visualisation of two fabric dyeing processes: a Pad-Batch machine line for dyeing flat textiles in an open-width state and an HT overflow dyeing machine for fabric dyeing in rope form. Although graphical applications of both dyeing processes can also be used for industrial purposes, in this article we focused more on presenting the program structure and functionalities for using the software for educational purposes. The program package and its structure and functionalities were presented to both professionals and university-level students. Their reaction was that the program offers an enhanced insight into the dyeing machinery possibilities to enable them to better understand the parameters of the dyeing process.

These kinds of computer based technologies and programs are in permanent development to improve the application value. They can be evaluated as very useful for educational

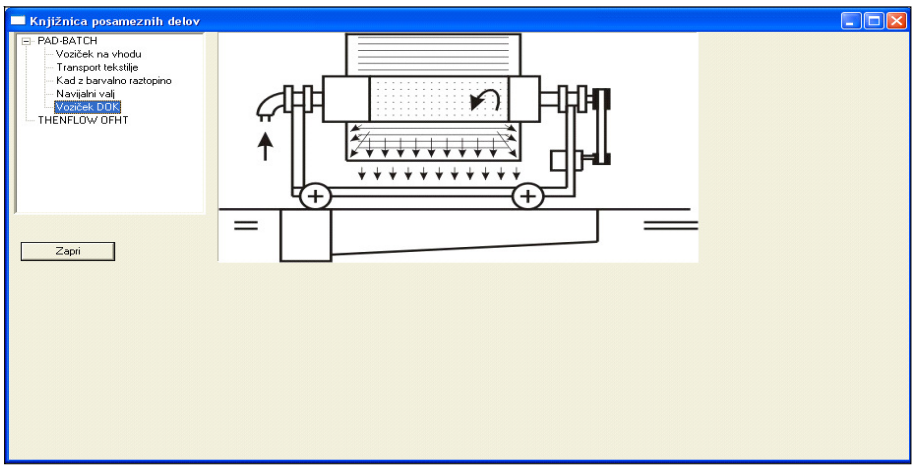

Figure 11. Washing machinery.

Material: 100 % cotton

Fabric thickness: 0.9 mm
Fabric mass:200 g/length meter
Fabric width: 152 cm
Fabric length: 2000 m
Dye type; commercial name:
Reactive; Bezaktiv Rot S-GT 150
Squeezing effect: 80 %
Fixation time: 24 h
Washing time: 20 mins

Recipe:

Dyeing solution:	30 g/L	Bezaktiv Rot S-GT 150
	50 – 100 g/L	urea
	3 – 5 g/L	Subitol RNC
Alkali solution:	50 mL/L	waterglass (w=32%)
(w=32%)	22 mL/L	natriumhydroxyd
Blend ratio:	4 part - Dyeing solution	
	1 part - Alkali solution	
Padding temperature:	25°C	

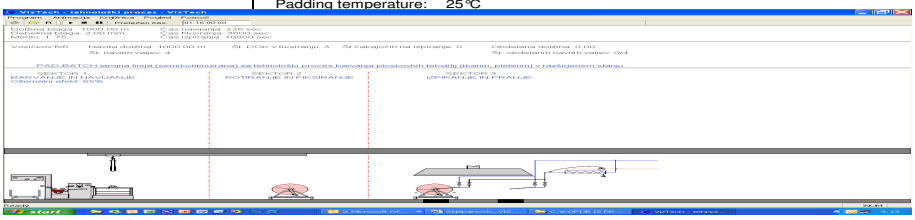

Figure 12. Screenshot of a program sequence of Pad-Batch machine line visualisation.

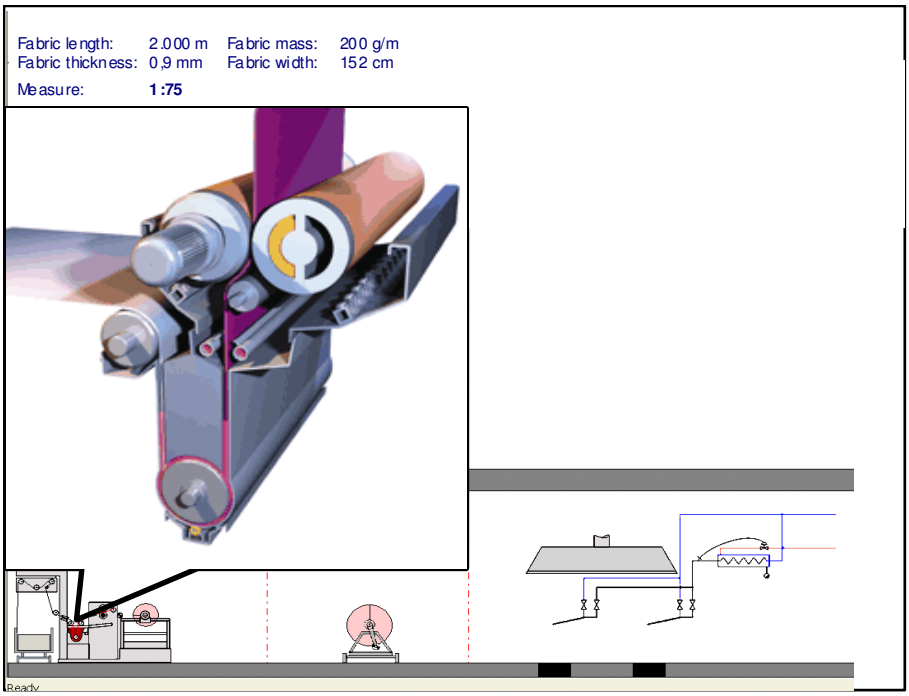

Figure 13. Functionality for introducing 3D details within the Pad-Batch machine line.

purposes in universities and higher education institutions offering modern textile studies. With this article we also wanted to present the need to create multidisciplinary teams and to connect the knowledge from different scientific fields when realising a research work of this kind.

References:

1. *C.K. Au, M.M.F. Yuen, Feature-based reverse engineering of mannequin for garment design, Computer-Aided Design Vol. 31 (1999), pp. 751-759.*
2. *D.E. Breen, D.H. House, M.J. Wozny, "Predicting the drape of woven cloth using interacting particles", Proc. SIGGRAPH '94, Orlando: Computer Graphics Annual Conf. Series, ACM Press (1994), pp. 365-372.*
3. *B. Eberhardt, A. Weber, W. Strasser, A fast, flexible, particle-system model for cloth draping, IEEE Computer Graphics and Applications, Vol. 16, No. 5 (1996).*
4. *D.E. Breen, D.H. House, M.J. Wozny, "A particle-based model for simulating the draping behaviour of woven cloth", Technical Report ECRC-94-19, European Computer-Industry Research Centre, München (1994).*
5. *Yxendis, Dobby Weaving Software. Available from: http://www.yxendis.com/ [5. 02. 2006].*
6. *Yxendis, XY Knit Platinium. Available from: http://www.yxendis.com/ [5. 02. 2006].*
7. *S. Cray, Virtual reality in virtual fashion, IEEE Spectrum Magazine Online. Available from: http://www.spectrum.ieee.org/select/0298/vr.html [5. 02. 2006].*
8. *A. Fuhrmann, V. Luckas, C. Gross, "Improving the clothing design process: fast 3D visualisation of garments", Proc. 4th Int. Conf. Innovation and Modelling of Clothing Engineering Processes IMCEP 2003, Maribor, Slovenia (2003), pp. 69-77.*
9. *Truetzschler. Fibre and sliver technology. CD-ROM, Truetzschler, Moenchenglagbach (2003).*
10. *Truetzschler. Product range, Sliver Formation. Available from: http://www.truetzschler.de/ [4. 03. 2009].*
11. *Then. Products/piece dyeing. Available from: http://www.then.de/ [16. 11. 2008].*
12. *Z. Stjepanovic, D. Fakin, P. Puncer, Visualization of a fabric dyeing process for educational purposes. Proc. 5th World Textile Conference AUTEX 2005, 27-29 June 2005, Portoro•, Slovenia. Maribor: Faculty of Mechanical Engineering, Department of Textiles (2005), pp. 1123-1129.*
13. *Kuesters. CPB Dyeing. Available from: http://www.kuesters.com/ [20. 03. 2009].*

∇∆