DOCTOR OF PHILOSOPHY

Improving sustainable performance by enhancing supply chain resilience the dynamic capability perspective

Li, Kexing

Award date:
2023

Awarding institution:
Coventry University

Improving sustainable performance by enhancing supply chain resilience: the dynamic capability perspective

Kexing Li

A thesis submitted in partial fulfilment of Coventry University's requirements for the degree of Doctor of Philosophy

December 2022

Declaration

I declare that this project is the result of my own work and all the written work and survey are my own, except where stated and referenced otherwise. This thesis has not been accepted or submitted for any comparable award elsewhere. I have given consent for my thesis, if accepted, to be available for photocopying and for inter-library loan, and for the title and summary to be made available to outside organisations.

Kexing Li
Augest 2023

Abstract

Conversations about supply chain resilience frameworks can lead stakeholders throughout the supply chain to adopt varied resilience measures in the face of unforeseen events. However, this approach can introduce inconsistencies that weaken and undermine resilience. This research, anchored in the dynamic capability framework, delves into the role of supply chain resilience in underpinning the sustainable evolution of supply chains, with a focal emphasis on the Chinese construction sector. Through a cross-sectional descriptive questionnaire survey, data was collected from 525 participants within Chinese construction supply chains. This dataset was rigorously analysed using both the Statistical Package for Social Sciences (SPSS) and Analysis of Moment Structures (AMOS). Firstly, employing second-order models, the study offers profound insights into the multifaceted nature of the pivotal constructs. The research differentiates between traditional company dynamic capabilities and supply chain dynamic capabilities, accentuating the imperative for a layered perspective. Then, Structural Equation Modelling (SEM) analyses revealed a direct, positive correlation between resilience and sustainability, where dynamic capabilities played a mediating role. Significantly, among the various dynamic capabilities, only Supply Chain Seizing (SEI) was discerned to significantly mediate the relationship between Supply Chain Resilience (SCR) and Sustainable Supply Chain Management (SSCM). Finally, invariance analysis affirmed the study's general applicability across diverse firm types in the Chinese construction domain. However, certain non-invariances detected in specific relations and error terms underscore the necessity for meticulous instrument development and validation to cater to different sample groups. The analysis also indicated that while SSCM practices are notably beneficial for designers, there exists an evident gap in their optimal application among contractors. In an era where Chinese construction firms are expanding globally, placing emphasis on the triple bottom line, the implications of this research stand out. Theoretically, the study illuminates the intricate nexus between supply chain resilience, dynamic capabilities, and sustainable management. From a practical standpoint, firms, especially in volatile contexts, are advised to embed dynamic capabilities within their strategic frameworks. A pivotal takeaway is the marked effectiveness of sustainable practices among designers compared to contractors, pinpointing clear areas for enhancement.

Acknowledgements

Despite all the troubles and sufferings during my three-year PhD course, I have finally reached the moment for which I have desired. Since it was a long journey, intellectually and emotionally, I would not have stood here without kind help and supports from the people around me. In particular, I would like to express my sincere gratitude to:

Dr Mahdi Bashiri, Prof Ming Lim, Dr Tega Akpobi, Dr Jiayao Hu, Dr Jialun Hu for providing me with insightful advice and encouraging me to keep going with confidence;

Dr Esin Yoruk, Dr Senmao Xia, Dr Xue Zhou, Dr Seyed Mojtaba Sajadi, Prof Jeff Jia,Dr Abdulrahman Al-Surmi for examining my thesis and providing valuable comments to significantly improve the quality of this thesis;

Prof Yuchen Liang, Dr Xinwen zhang, Dr Sir Yee Lee, Dr Yurun Yang, Dr Zihao Liu for leading me to Coventry University and motivating me to become a good researcher;

Miss Xueyan Fan, Dr ZhuJian Qiao, Mr Kaikun Chen, Miss Hanxiao Yang, Mr Jianfeng Jiang, Mr Shuo Chen for being my friends whom I can lean on during the PhD course;

Lastly, but not least by no means, I would like to express my special gratitude to my parents, for their endurance through the toughest time in my lives. In particular, without my parents sacrifices and unwavering supports, I was not able to have come this far.

Table of Contents

List of Tables

List of Figures

List of Appendix

Chapter 1: Introduction

1.1 Background

It is crucial to increase supply chain resilience (SCR) understanding and expertise because disruptions, even if they have a low likelihood of occurring, can have devastating effects on businesses if they do appear. Underestimating or being unable to predict an event's presence and effects can result in interruptions that significantly affect SC operations, regardless of SC size or the immediate field of business. Recently, SCR has become a main strategic requirement of the sustainable supply chain. This tendency emanates from the following three main facts (such as lean operation, natural disasters and the requirements of Triple Bottom Line).

Contemporary strategies for SC efficiency, such as the exploitation of globalisation, inventory reduction, centralised distribution and production, supply base reduction, lean operation and outsourcing, have generated uncertainties (Revilla & Saenz, 2017; Rotaru et al., 2014; Blackhurst et al., 2011; Tang 2006; Jüttner et al., 2003). Although these methods have resulted in reduced costs, improved quality, enhanced business sustainability, and greater agility for many supply chains, along with global SCs, more significant risks and uncertainties are encountered. For example, lean inventories and just-in-time operations reduce the ability of supply networks to withstand supply interruptions by leaving little opportunity for error when circumstances drastically shift (Rajesh, 2018; Peng et al., 2011). In the meantime, as supply chains get more intricate, they become more susceptible to disruptions caused by various factors, such as political instability, unforeseen regulatory concerns, port issues, and terrorist operations (Scheibe & Blackhurst 2018). Consequently, establishing SCR was a natural consequence of recognising these rising hazards (Christopher & Lee, 2004).

Apart from the vulnerability of SC, past and recent disasters have demonstrated unexpected disruptions also bring dramatic consequences for supply chains, such as production shutdowns, hampered productivity and capacity utilisation (Ivanov, 2020; Jabbarzadeh, Fahimnia, & Sheu, 2017; Cardoso et al. 2015). In the longer term, the firm's stock price and financial health will suffer a negative impact and even go broke of such consequences (Tang 2006; Hendricks & Singhal 2005). Hurricanes Katrina, Ike, Sandy and Mathew in the United States (2005, 2008 and 2012) and Atlantic Coast (2016), tsunamis in the Indian Ocean (2004) and Japan (2011), earthquakes in China (2008) and Chile (2011 & 2015) and flood in the Philippines (2013), and early in March 2020, the number of COVID-19 cases has risen exponentially worldwide, resulting in border closures, quarantines, and total shutdowns of many vital facilities, markets, and activities in the South China Sea (SC The World Health Organization (WHO) proclaimed the global pandemic on March 11, 2020. Realising the detrimental effects of disruptions,

businesses are attempting to establish more robust supply chains than ever before, which is a problem for sustainable growth (Jabbarzadeh et al., 2018; Baghalian et al., 2013; Tomlin, 2006). It is because resilience refers to a supply chain that can absorb shocks and keep its primary function and structure despite disruptions (Hosseini et al., 2019; Bhamra et al., 2011; Christopher & Peck, 2004).

More and more environmental and social burdens require companies to consider environmental and social issues in their supply chains, such as developing more accurate sustainable development indicators for working conditions, accidents, carbon footprints and corruption. Many places require firms to consider these costs and associated (Giannakis & Papadopoulos, 2016). It means that the requirement of sustainability makes the ability of enterprises to meet the new policy. In turn, a firm with a resilience strategy becomes a key advantage for enterprises seeking to improve sustainable supply chain management. It makes it imperative for companies to consider SCR in their sustainability strategies in response to potential TBL requirements, such as consumer requests, government policies or NGO proposals. It is understandable, given that the majority of a company's environmental footprint and social duty lay outside its direct control over manufacturing, packaging, and transportation. Sustainable supply chains are interactions between organisations in a supply chain that deliver environmental and social benefits to the entire supply chain or to one or more organisations in the supply (Taylor & Vachon, 2017). As is well known, the focal point of strategy in SCs has evolved from local optimisation of sustainability elements to consideration of suppliers' and customers' interfaces with operations (Kleindorfer et al., 2005). Moreover, due to the deteriorating natural environment, supply chain sustainability is viewed as a critical source of environmental responsibility, which is crucial to the long-term profitability of businesses (Wang & Sarkis, 2013). This means that embedding resilience into sustainable SCs management can not only enhance the ability to resist uncertain changes brought about by the shift of SCs strategic centre but also promote the implementation as a sustainable development strategy, especially in terms of social responsibility and natural environment, and try to reduce the frequency of natural disasters caused by excessive and unfriendly human activities by strengthening upstream and downstream coordination.

In practice, supply chain resilience and sustainability performance interact throughout the strategic network design phase. For instance, Fahimnia & Jabbarzadeh (2016) identify that supply chains are susceptible to variations in the resilience level in terms of three dimensions of sustainability (i.e., economic, environmental and social). Ivanov (2018) shows that sustainability factors can be associated with supply chain resilience in different ways through a simulation-based model. To be more particular, the impacts of disruptions can be increased by sustainable single sourcing and reduction of inventory facilities. On the other hand, the

sustainability and resilience of SCs can be enhanced simultaneously by facility protection. Zahiri et al. (2017) found that sustainability and resilience objectives conflict by studying a case problem. Given that Jabbarzadeh et al. (2018) evaluate past robust supply chain network designs, re-design the resilient network, and can concurrently incorporate the three characteristics of sustainability, they are deemed to have achieved their objective. Nevertheless, despite the linkages between resilience and sustainability in real-world examples, many of its sectors lack significant empirical investigation, especially its relationship with sustainability. For instance, research efforts on SC resilience and sustainable SCM tend to system design rather than a managemental view. Thus, this will be the first and most significant gap in this research.

SSCM enables businesses to pursue economic, social, and environmental goals in addition to corporate responsibility measures (e.g., Gold et al., 2010, Carter & Easton, 2011). Constant changes in supply chain arrangements, which have generated concerns about how and whether this could help to sustainability (Halldórsson et al., 2009), necessitate proactive action on the part of corporations. This provides a link to an additional emerging subject of management research, namely dynamic capacities.

Nevertheless, another reason why the role of resilience in sustainability remains underappreciated may be that it is not a direct effect only. For example, Kholaif and Ming (2022) observed that uncertainty positively impacted the adoption of green supply chain management practices, with a more significant impact on firms' environmental and social performance. Bose et al. (2022) find that enterprises can better capture market changes and effectively adjust strategies by strengthening cooperation and communication with internal and external stakeholders. A driver of such a firm's action is the changing configuration of supply chains (Halldorsson et al., 2009), raising concerns about how and whether this contributes to sustainability. A link is provided to another young field of management research, namely dynamic capabilities (DC) approach. In the current highly competitive business environment, enterprises need not only the ability to operate and compete in the existing environment but also the ability to reorganise and reconfigure resources to adapt to dynamic markets and emerging technologies (Teece, 2007; O'Reilly & Tushman, 2008), which requires its transition to more sustainable business models and operations. Being able to maintain sustainable initiatives and results during periods of severe and prolonged disruption is a key capability for managers and enterprises. Therefore, we consider how to improve sustainable performance through critical supply chain resilience from the perspective of dynamic capabilities.

From a long-term strategic perspective, firms need operations and competence to compete in existing circumstances and recombine and reconfigure resources to adapt to dynamic markets and emerging technologies (O'Reilly & Tushman, 2008). In this view, dynamic capabilities enable a company's top executives to identify dangers and opportunities and to reconfigure

assets based on their features, such as particular skills, processes, procedures, organisational structures, decision rules, and disciplines (Teece, 2007). According to Teece et al. (1997, p. 515), "Winners in the global marketplace have been organisations that can exhibit prompt responsiveness and rapid, flexible product innovation, as well as the managerial capability to coordinate and use internal and external talents successfully." That means dynamic capabilities and resilient strategies showed similar strategic responses and characteristics when responding to threats. Therefore, dynamic capabilities could be used as an excellent managerial view to explore the relationship between SCR and SSCM.

This study chooses the construction sectors (not including the real estate business) in China that fulfil the requirements for such a long-term sustainable SCs development and dynamic environment. Firstly, the activities of sustainable construction SCs will face more risks and challenges than traditional ones because of the goals of reaching sustainability in addition to the usual goals such as a sustainable design, keeping the safety of employees and customers, carrying on an environmental procurement and timely delivery with quality within project budgets (Hwang & Supa'at, 2017; Zhao et al., 2016). To achieve these goals, newly developed and complicated design approaches and construction technologies will be inclined to adopt by construction projects like using innovative materials (such materials may have durability issues or lack of sufficient tests) or seeking third-party green certification, which may generate considerable uncertainties and unpredictable risks in each node of SCs (Hwang & Supa'at, 2017; Hwang et al., 2015; Yang & Zou, 2014). Furthermore, governments and other public authorities require more and more regulations like recycling, energy and regarding site selection grows each year and is even expected to continue to increase in the future. If construction projects cannot appropriately cope with the risk, their successful completion and operation of sustainable construction sectors will further be impacted. As a result, effective SCs risk management is of great importance during the sustainability of this sector.

Secondly, with the recent and rapid growth in China, the construction sector has advanced and become more significant than previously. Since 2006, the country has begun implementing sustainability policy and enacting new rules to alter generally practised patterns in the construction industry, such as the Assessment Standard for Green Buildings (He et al., 2018). Meanwhile, the added value of the construction sector (not including the real estate business) in China increased from 5,534 billion RMB in 2000 to 70904 billion RMB in 2019, which is 7% of the whole GDP (National Bureau of Statistics, 2019). That also means it solves large employment. Consequently, energy consumption in the construction sector grew from 21.79 Mtsce (Million tons of standard coal equivalent) in 2000 to 77.19 Mtsce in 2016. At the same time, total energy consumption in China rose from 1,469.64 Mtsce in 2000 to 4,360 Mtsce in 2016 (National Bureau of Statistics, 2016; 2017). As a result, more stringent environmental

regulations, upper management commitments, social pressures, technological innovations and increased demand for more sustainable products and services are forcing organisations to rethink their operational improvement plans by considering the environmental and social factors of sustainability (Garza-Reyes et al., 2019).

Some studies focus on evaluating sustainable construction risk factors independently. Yang et al. (2016) and Yang & Zou (2014) analysed and modelled stakeholder-related hazards in sustainable building. Performing a risk analysis based on risk interdependencies can provide a more thorough and effective analysis for assessing, responding to, controlling and monitoring uncertain occurrences in sustainable construction projects. However, although risk factors have been widely discussed, no prior systematic studies investigate risk interdependencies during sustainable construction by taking the dynamic capabilities view into account. Meanwhile, although the traits of construct sectors are suitable and necessary to adopt a resilience strategy, there is a lack of empirical research on resilience to develop it in sustainable SCs. Besides, although Guan et al. (2020) and Goh et al. (2020) presented sustainable construct sectors' practice and performance with an exploratory study, they called for further research on sustainable construct sectors' consequences through the production of a more comprehensive framework. Therefore, the second gap in this research is the lack of comparative research about sustainable SCs management and SCs resilience, especially in the constructor.

Moreover, the existing operational studies (Kamalahmadi & Mellat- Parast 2016; Namdar et al. 2018) neglected environmental and social performance in favour of cost minimization in normal and disruption scenarios. They advised using economic success as a resilience metric. Despite incorporating the notion of environment and society pillars into their operational objectives, this trend has led to the majority of SCR not understanding the effects of environment and society pillars on the process of resilience building. A few SCR and SSCM studies have begun to investigate and incorporate the environmental pillars of sustainability into their research models; however, because the concept of sustainability is incomplete, these studies have yielded limited results. In their 2014 study, Govindan et al. defined sustainability as green management and cited only environmental advantages as examples. SGM, EP, IGM, and CGM are important perspectives that must be considered to achieve corporate sustainability. Their recommended, green-related strategies cannot effectively represent all sustainability pillars (Zhang et al., 2018; Zhu et al., 2008). Thus, the limited empirical study and incomplete measurements are the third gaps.

1.2 Research Objectives and Questions

The present study intends to evaluate the mediating role of DC in the links between SCR practice and SSCM practice, thereby bridging the gap between our theoretical findings on DC

and their practical consequences by addressing the following research question. 1) What are the strategic implications of supply chain resilience about the sustainable performance of the construction sector? and 2) What are the impacts of dynamic capability on improving supply chain resilience in the sustainable construction supply chain? To address the research questions, a more comprehensive model of sustainable practice will be provided that incorporates revised sustainable metrics (i.e., the economy, society, and environment pillars) and the relationships with SCR via DCs.

The impact of SCR procedures on SSCM from a SCDC perspective will be investigated using five hundred expected samples. A quantitative follow-up research (questionnaire) was done to investigate the underlying causes of the survey results. This study offers two main contributions to the literature. We elaborated on the impact of resilience on supply chain sustainability (Shashi et al., 2020; Negri et al., 2021). We uncovered their mediating relationship from a dynamic capability perspective to better illustrate their relationship with science parks.

The following Table 1-1 summarises the research questions, aims, and objectives and also outlines the relative hypothesis

Table 1- 1. Overview of Research Objectives

Research Question	Aim	Objectives	Research Hypothesis (34 Hypotheses in total)
RQ1. What are the strategic implications of supply chain resilience for the sustainable performance of the construction sector?	To explore the relationships between supply chain resilience (SCR), supply chain dynamic capabilities (SCDC), sustainable supply chain management (SSCM), and sustainable supply chain management performance (SSCMP).	1) To identify the underlying philosophy of SCR, SCDC, SSCM, and SSCMP (Literature review).	$H_{1a\ to\ 1i}$: SPD, EP, ECC, IGM, IR, DM, SM, CDI and RL positively reflect SSCM. $H_{2a\ to\ 2d}$: ENVP, OPEP, ECOP, and SCOP positively reflect SSCMP. $H_{3a\ to\ 3d}$: CC, RE, CU, AG positively reflect SCR in $H_{4a\ to\ 4c}$: SEN, SEI, REC positively reflect SCDC
		2) To explore the validity of the above measurements in the Chinese Construction sector (Focus group). 3) To investigate the relationship between SCR, SCDC, SSCM and SSCMP in the Chinese Construction sector (Questionnaire, SPSS, Amos).	H_5: SCR is positively associated with SSCM.
			H_6: SCR is positively associated with SCDC.
			H_7: SCDC is positively associated with SSCM.
			H_8: SSCM is positively associated with SSCMP.
RQ2. What are the impacts of dynamic capability on improving supply chain resilience in the sustainable construction supply chain?	To develop conceptual models of the relationship between supply chain resilience, dynamic capabilities, sustainable supply chain management, and sustainable supply chain management performance.	4) To investigate the role of SCDC in the research model (Amos). 5) To test the invariance of the research model in the Chinese construction supply chain (Amos)	H_9: SCDC mediates the relationship between SCR and SSCM. H_{9a}: SEN mediates the relationship between SCR and SSCM. H_{9b}: SEI mediates the relationship between SCR and SSCM. H_{9c}: REC mediates the relationship between SCR and SSCM. H_{T1}: Invariance of unconstrained between Arc and Con. H_{T2}: Invariance of measurement weight between Arc and Con. H_{T3}: Invariance of random measurement residuals between Arc and Con. H_{T4}: Invariance of structure covariance between Arc and Con. H_{T5}: Invariance of the latent mean of Structure means between Arc and Con. H_{T6}: Invariance of path coefficients between Arc and Con.

SCR= Supply chain resilience; DC= Dynamic capabilities; SSCM= Sustainable supply chain management; SSCMP= Sustainable supply chain management performance; SEN=supply chain sensing; Sei=Supply chain seizing; Rec= supply chain reconfiguration; Arc=Architects and consultants; Con= Contractor.

1.3 Research Framework

The methodological issue comes in capturing and investigating these subsequent interactions in a single study (Saunders et al., 2012). Due to this difficulty, most studies focus on one or two phases that may be investigated using a single research approach. This thesis employs a multi-phase mixed-method approach from a holistic perspective that encompasses sustainable supply chain management activities. In contextualising resilience improvement for sustainable management in the Chinese construction supply chain, they are based on empirical data, although their techniques for data analysis vary. Figure 1-1 illustrates the research framework in further depth.

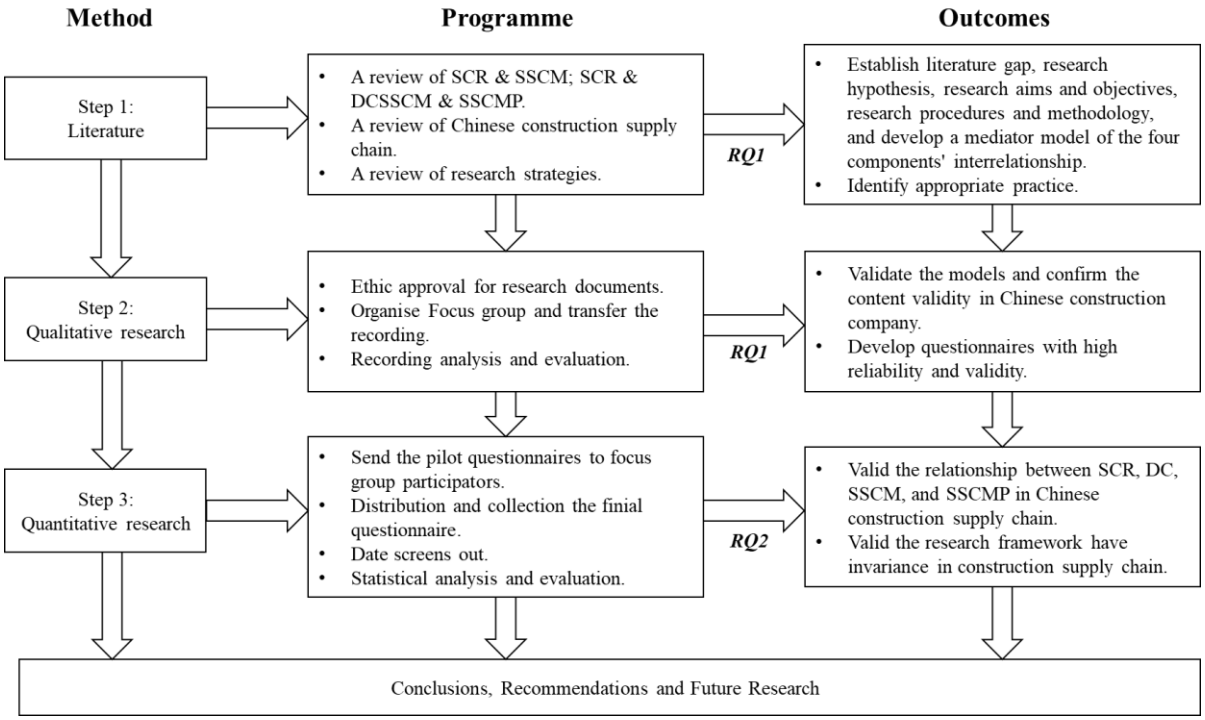

Fig.1- 1 Research Step Framework

Step 1: The investigation begins with a thorough literature review to define the study's context and set it apart from related fields. Chapter 2 will provide a detail of this process.

Step 2: After in-depth interviews with key informants from the construction sector active in sustainability and resilience projects, it will analyse the data gathered through an inductive, informal discussion forum and participant observation. There has been much use in the past of both informal discussion forums and participant observations as exploratory qualitative research methodologies due to their ability to increase familiarity with the research topic and problem and spark originality (Saunders et al., 2012). According to the research, one significant benefit of these techniques is the generation of novel ideas, themes, and fields that might not have been uncovered by conventional interviewing alone (Saunders et al., 2012; Kline, 2015; Byrne, 2016). As a result, the subsequent round of in-depth interviews with industry representatives built on the findings of these two qualitative

research techniques. Experts in the field should be engaged in qualitative, explanatory research before a quantitative study is conducted (Saunders et al., 2012; Kline, 2015; Byrne, 2016). Chapter 3 will cover the qualitative and quantitative research methods, data collection, and sampling that were put into practice, as well as provide a result of qualitative

Step 3: Explanatory and descriptive studies fell under the second tier of quantitative analysis. As a follow-up to the literature review and qualitative research that led to the development of a conceptual model and hypotheses, this study applied quantitative research approaches to test the validity of these ideas in an empirical setting. To gather information, a self-guided online survey was made available. Because conducting quantitative research requires extensive planning and organisation in advance to guarantee accurate results and the appropriate application of statistical processes and analysis (Kline, 2015; Byrne, 2016), this study used tried-and-true methods for developing questionnaires, a deliberate sampling strategy and organised data collection methods (as detailed in chapter 5). Adopting suitable measurement items from pre-existing scales was the first stage in operationalising the conceptual model and its components; if new scales had to be produced, standard methods for scale development were used. After extensive testing and validation, the questionnaire was converted into an online survey utilising the online survey technology Qualtrics. The study centred on the upper and middle echelons of management in China's bustling construction industry. Following collection, the data underwent a statistical analysis employing causal analysis as a further step in the study's confirmation process. Structural pathways analysis was applied to the data, allowing for the testing of hypotheses in line with the tenets of SEM (SEM). Therefore, SPSS AMOS 26 for SEM was used to assess the conceptual model and its assumptions. The conceptual model was improved in light of the findings. Finally, the analysis of the invariance technique will also highlight the differences in the implementation level given the firm's circumstances. Chapter 4 will discuss the quantitative result, and Chapter 5 will discuss conclusions from two research methods.

1.4 Thesis Structure

This dissertation contains six chapters. The first chapter introduced the research context, aims and questions, framework, scope, and structure of this dissertation. It briefly described the requirements for this research and how it will be executed.

The dissertation's second chapter is based on the literature review and analyses existing research on supply chain resilience, dynamic capability, and sustainability. It will provide a study framework to review existing SCR & SSCM research, assess the present knowledge on SSCM based on SCR, and then identify the research gaps in the Construction supply chain, in particular. According to the sub-questions in RQ1, it investigates various practices and then develops metrics to have a deeper understanding of them. These metrics are utilised to create a high-order structure highlighting the relationships between resilience, dynamic capability, and sustainability in construction supply chains.

Based on this, a theoretical model of supply chain dynamic capacities development is depicted. In terms of dynamic capacities, it also conceptualises the discussion between enhancing supply chain resilience and sustainability. By developing hypotheses and measurement scales, these three groups of constructs will be incorporated into a research model.

The third chapter describes the qualitative and quantitative methods that will be utilised in this thesis. After defining the research design, this section attempts to justify the measures design and hypothesis to answer the research questions by outlining the use of focus groups and analysis procedures. It examines the findings of the semi-structured interviews and the questionnaire survey about the influence of resilience and sustainability on the successful exploitation of dynamic capability for enhanced sustainable performance in the Chinese construction supply chain. It demonstrates how qualitative findings can complement quantitative studies. Then, describe the quantitative approach that will be utilised for this thesis. After describing the study design, this section attempts to justify the methodological choices to answer the research questions by outlining the data collection and analysis methodologies.

The results from statistical analyses of survey data are presented in Chapter 4. The descriptive statistics of survey data will reveal the degree to which resilient and sustainable practices are implemented. Amos26 will be used to validate the measurement and structural model to provide insight into the implications of resilience on sustainable supply chain management. Moreover, invariance analysis will show the disparities between tactics based on a company's circumstances.

Chapter 5 discusses the findings of the questionnaire survey on resilience to improve sustainable performance in Chinese enterprises from a dynamic capability perspective.

Future scholars will find Chapter 6's summary of limits and proposed future study directions helpful. The outcomes of their work can assist them in discovering areas in which they may need to improve and keep them abreast of the most recent research and best practices in their profession. Some possible suggestions for Chinese managers to consider while enhancing their sustainability performance.

1.5 Chapter Summary

This chapter discussed the growing significance of resilience and sustainability in practice and identified unexplored important research fields. Based on the research gaps, it advocated that resilience and sustainable management solutions for a construction supply chain that may decrease the occurrence and impact of risks and waste and create a desirable supply chain be investigated. The purpose generated two study questions regarding how resilience and sustainability are understood and how an organisation can effectively manage resilient and sustainable building supply chain processes. To address the research questions, a research architecture consisting of two exploratory studies and one

predictive/confirmatory study was described. This chapter also establishes the study boundaries, which include supply chain operations, a network of diverse businesses in the construction sector, and China as the country where this research will be undertaken. In addition, the full structure of the thesis was described. In conclusion, this chapter explained why research on resilient and sustainable supply chains is necessary and how it may be conducted to comprehend resilience and sustainability and their management. The following chapter will review recent research on supply chain resilience, dynamic capability, sustainable supply chain management, and performance.

Chapter 2: Literature Review

In order to rigorously discuss the gaps discussed in the previous chapter, this chapter reviews previous research on resilience-based sustainable supply chains and identifies research gaps. Due to the lack of in-depth research on management perspectives, the exploratory nature of this study leads this literature review to focus on how to build SSCM knowledge in order to apply the findings to the construction supply chain in China. In order to understand the existing body of literature, definitions of resilience, sustainability, and dynamic capabilities in the context of supply chains are proposed, and then an SSCM research framework is proposed to illustrate the structure of current knowledge on SSCM and synthesize knowledge in a structured manner. The results of this chapter will answer the first research question: "RQ1a: What is the effective SCR, SSCM, DC practice?". The elements in this framework will be further discussed in later chapters so that it can provide theoretical guidance for understanding China's construction supply chain research. Figure 2.1 show the position of this chapter in this thesis.

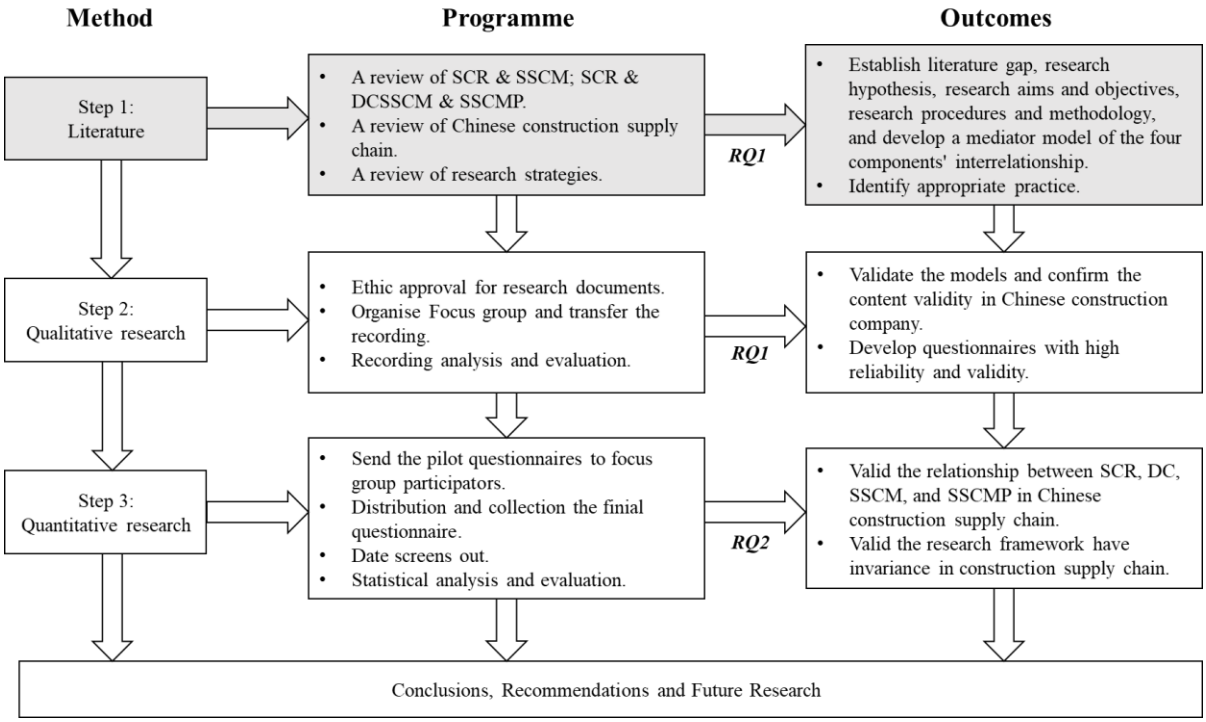

Fig.2- 1 Research Flowchart 1

This chapter consists of seven main parts. The first part will discuss the methodology and overview of the literature review, such as leading journals, themes, methodologies, Illustration types and Industries. These discussions will help the research indicate trends in current research. Based on this trend, the following three sections will focus on the in-depth discussion of the potential research topic. Sections 2.2 and 2.3 will discuss the definition of resilience in the supply chain and then propose the measurement factors used in the research. The theory's application will be discussed in Section 2.4, and the specific measurement will also be proposed by developing the dynamic capabilities from the organization to the supply chain. Refer to the above discussion, and Section 2.5 will indicate the research gap of this research. To fill the indicated research gaps, relevant hypotheses and research framework will be presented in Section 2.6. The final section concludes the chapter and provides brief guidance for subsequent chapters. Figure 2.2 outline the structure of this chapter.

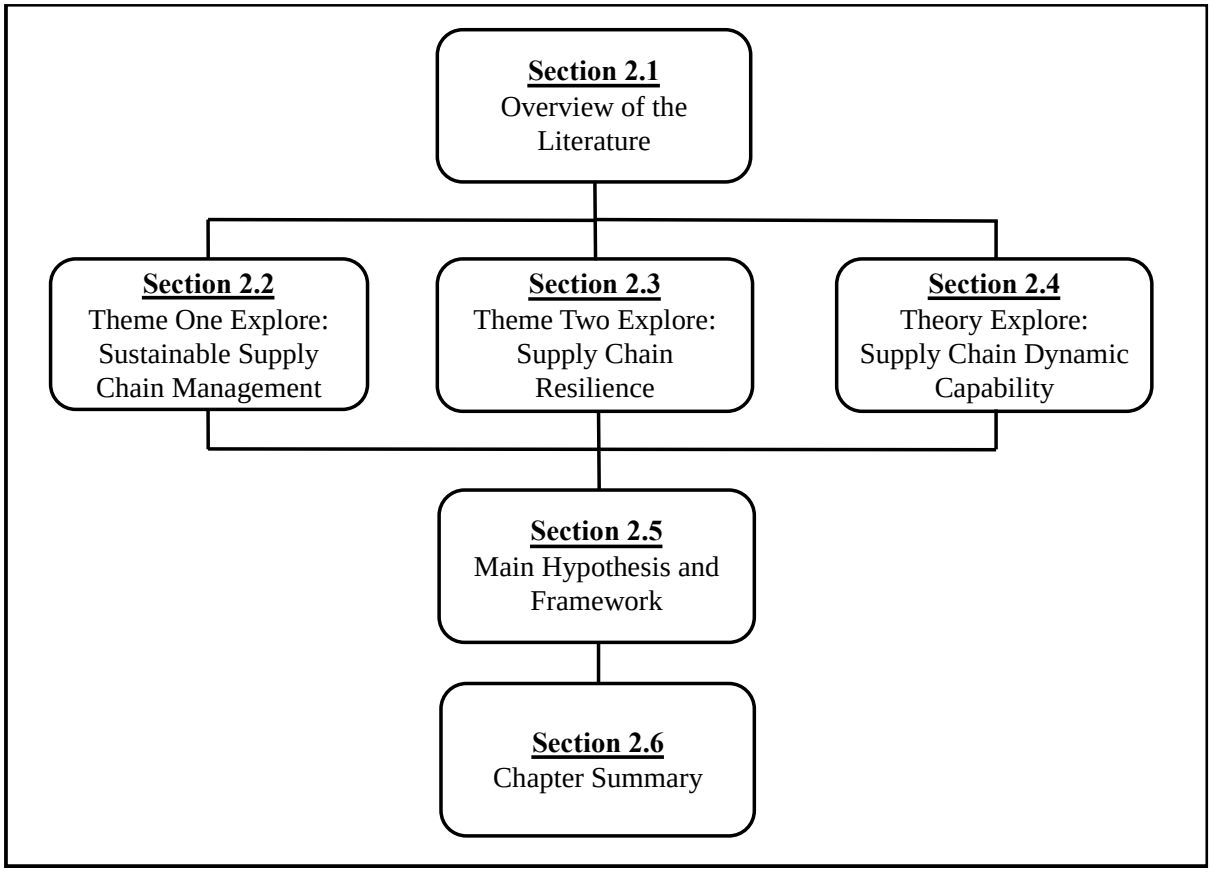

Fig.2- 2 The Outline of Chapter 2

2.1. Overview

In 2004, Christopher and Peck released "Building the Resilient Supply Chain," which suggested a definition of supply chain resilience (Christopher & Peck, 2004). This theory concurs with the definition of resilience as "the capacity of a system to return to its original condition or transition to a new, more desired state following disturbance." Due to stricter regulations, increased competition, and consumer pressures (Meixell & Luoma, 2015), there has been a growing emphasis on supply chain sustainability in recent years. It has led to globalisation, outsourcing, challenging markets, uncertain demand, and a push toward economic competitiveness (Ansari & Kant, 2017; Grant et al., 1991). Extreme weather conditions, natural disasters, global governance failure, information infrastructure breakdown, water crises, cyberattacks, and infectious illnesses are, in order of likelihood and impact, the top supply chain threats (Jabbarzadeh et al., 2018). In addition to greater demand volatility, shortened product life cycles, and an accelerated innovation rate, these recent changes have contributed to supply chain complexity vulnerability (Fahimnia & Jabbarzadeh, 2016). As a result, the need to examine supply network resilience to plan for, resist, and recover from supply chain disruptions has evolved (Kamalahmadi & Parast, 2016).

The sustainable supply chain is broadly defined as the interaction between companies in a supply chain that holistically offers environmental, economic, and social advantages to the supply chain as a whole

or to one or more businesses within the supply chain (Taylor & Vachon 2018). The present sustainable supply chain is plagued with numerous issues. First, sustainability typically prioritises efficiency over effectiveness. For instance, enhancing a company's efficiency and sustainability by lowering its inventory may impair its ability to respond to supply shortages (Negri et al., 2021). Second, the intricate architecture of sustainable supply chains makes them susceptible to risk (Abdolazimi et al., 2021). Since resilience can refer to a supply chain that can absorb disturbances and retain its primary function and structure in the face of disruptions through Communication and coordination, re-engineering, risk culture management, and agility, it is ideally suited for addressing these challenges faced by the sustainable supply chain (Christopher & Peck 2004; Sheffi & Rice, 2005; Bhamra et al., 2011; Fahimnia & Jabbarzadeh. 2016). These features significantly impact supply chain management and influence the supply chain's design, organisation, and operations (Ambulkar et al., 2015; Chowdhury & Quaddus, 2017; Adobor & McMullen, 2018; Lohmer et al., 2020).

Some researchers examined the resilience-based sustainable supply chain to determine its potential. Castañeda-Navarrete et al. (2021), for instance, conducted a literature review to assess the value of resilience for supply chain management in five key policy areas: delivering emergency responses, reformulating foreign direct investment attraction strategies, supporting technology adoption and skills development, deploying labour standards, and adopting gender-sensitive responses. Chowdhury & Quaddus (2017) analysed the quantitative survey data using structural equation modelling based on partial least squares. The finding shows that the resilience scale (like flexibility, efficiency and recovery) possibly better predicts supply chain operational vulnerability and supply chain performance and corresponds to the "technical" and "evolutionary" fitness criteria of dynamic capacity theory. Even if there are some linked studies, it should be explicitly noted that these investigations are still in the early phases, and associated academic articles are not fruitful (Bechtsis et al., 2021). In addition to academic papers, the industry is actively studying the application of resilience in supply chains. In the energy industry, the contributions of the considered measures and the consequences of uncertainty are analysed by examining an actual situation in Iran. The results demonstrate that decision-makers can use the proposed model to boost corporate social responsibility and resilience by 50% and 20%, respectively, despite a 50% increase in total cost (Hosseini-Motlagh et al., 2020). In an automobile assembly company, the Conditional Value-at-Risk criterion is compared to Value-at-Risk and average absolute deviation to model risk. Results demonstrated that the suggested model predicts the overall cost, pollution, energy consumption, and employment level more accurately than the baseline model (Mehrjerdi & Lotfi, 2019). Despite those above academic and practical concerns, the influence of resilience on sustainable supply chains is still little understood. This section examines articles on resilience-based sustainable supply chains to better understand the value of resilience, identify the present research content, and establish a future research agenda.

Several articles have conducted literature reviews on resilience-based sustainable supply chains; for instance, one article focused on a data-driven secure, resilient, and sustainable supply chain (Bechtsis et al., 2021), while another article reviewed the food supply chain (Adelodun et al., 2021). The remaining two articles did not have a specific application background (Negri et al., 2021; Sharma et al., 2021). These papers investigated the value, present trends, and future potential associated with the impact of supply chain resilience. To the best of our knowledge, no literature study has been conducted that addresses the four components described in this research, including supply chain themes, research methodology, illustration types, and industries addressed. In addition, this study examines the value resilience will offer to supply chains by analysing the content of previous research works, which has considerable significance for the technology in its infancy. This section seeks to provide answers to the following questions to shed light on this research.

Q1: What is the value of considering sustainability and resilience for the same supply chain? The answer to this question will be given after the discussion of sustainability and resilience in Section 2.3.4.
Q2: What sustainable supply chain theme has attracted the most attention of scholars? The answer to this question will be given in Section 2.1.2.2.
Q3: What research methodologies and illustration types are developed in adopting sustainability in supply chains? The answer to this question will be given in Sections 2.1.2.3 and 2.1.2.4.
Q4: Which industries are involved in resilient and sustainable supply chains? The answer to this question will be given in Section 2.1.2.5.

The rest of this section is as follows. Section 2.1.1 introduces the research methodology. The descriptive analysis and content analysis of the reviewed articles are described in Section 2.1.2. Section 2.1.3 explores research trend and future research opportunities.

2.1.1. Method to explore sustainability and resilience

This section describes the research methodology used for the literature review, which consists of article screening and article coding.

2.1.1.1. Article screening

Consideration was given to relevant, high-quality articles to generate credible research questions. ScienceDirect, Scopus, and Google Scholar are the three most essential citation databases. Scopus is regarded as a more trustworthy international academic journal database than the other two sources and contains the highest quality research publications. To improve the quality and rigour of the article search, the publications analysed were restricted to those published in academic journals with peer review and those focusing solely on the resilience system to make the analysis successful. This study's query string included "Sustainable," "Resilient," and "supply chain." The term resilience dates back to 2004. However, it was first primarily used in the supply chain operations industry. The first academic journal

paper on resilience and sustainable supply networks appeared in 2009. 2004 to 2021 was thus chosen as the range for the timeframe search. Table 2-1 details the three phases of article screening: theme search, type screening, and content screening. This table also includes a listing of the screening requirements. In the initial round of theme searches, 260 articles were chosen for inclusion. After applying a type-based filter, 162 articles were discovered. After the vetting of the material, 160 legitimate articles remained.

Table 2- 1. Criteria used to screen the articles.

Stage	Details
Theme search (260)	Database: Scopus Language: English Time range: Jan.2005 to Dec.2021 TITLE-ABS-KEY: resilient AND sustainable AND supply AND chain Search space: Theme
Type screening (162)	According to the theme search, the articles in the Scopus database are initially selected. Only article and journal paper are retained
Content Screening (160)	Read the title and abstracts to judge the relevance. In addition, read the contents of the articles selected in the previous step to judge the relevance

2.1.1.2. Article coding

This study's coding approach is based on the four-dimensional coding proposed by Ghadimi et al. (2019), which includes sustainable supply chain themes, research methodology, illustration styles, and application sectors. The 106 articles covered in Section 2.1.1.1 were coded according to the four dimensions outlined above to produce the four perspectives of content analysis stated in Section 2.1.2. A difficulty arises throughout the coding procedure that merits consideration: determining the category to which an article belongs is subjective. To ensure the rigour and objectivity of the categorization procedure, the criteria suggested by Wang et al. (2019) to double-check the categories were adopted. The procedure employed was as follows: the first and second authors coded the data. If there was any contradiction in the coding, the third author participated in the coding, and the ultimate decision was reached jointly by all writers.

Here, Ming et al. (2021) is used to illustrate the particular coding procedure. Using resilience theory, these researchers investigated the risk decision-making dilemma in a spaceship supply chain under decentralized, somewhat centralized, and completely centralized circumstances. (1) Themes concerning the supply chain's sustainability. The study addressed risk issues in supply networks, hence it falls inside the risk category in terms of the resilience's specific impact. (2) Research techniques. The study used the Stackelberg game model to examine the profit in three conditions; hence, it falls under the genre of

mathematical models that employ modelling. (3) Illustration kinds. The use of mathematical models implies numerical experiments were conducted. Four industries are discussed. The study analyzed a spaceship production supply chain, which clearly falls within the category of manufacturing.

2.1.2. Overview of the Literature

This part addresses the descriptive and content analysis of the 160 articles specified in Section 2.1.1.1, leading to the discussion of the findings. The descriptive analysis presents basic information about the articles, such as publication year, leading journals, and nations (Section 2.1.2.1). In addition, content analysis is conducted to analyse the current research content based on the four coding dimensions proposed in Section 2.1.1.2, such as sustainable supply chain themes (Section 2.1.2.2), research methodologies (Section 2.1.2.3), illustration types (Section 2.1.2.4), and industries addressed (Section 2.1.2.5).

2.1.2.1. Publications per year, main journals, and countries

Since 2009, Table 2-2 displays the number of research articles and review articles published on relevant topics. The overall trend reveals that the number of published articles increased year, indicating that experts' interest in conducting research has gradually grown. The period studied in this study concludes in 2021. Since 2009, review articles have been published. It is because research on the coupling of resilience and sustainable supply chain has only recently begun. Previous study findings are insufficient to support review articles. As the investigation progresses, there will be a rapid increase in the number of review articles.

Table 2- 2. Number of articles per year.

Types	2009	2011	2012	2014	2015	2016	2017	2018	2019	2020	2021
Research	0	1	2	4	2	3	8	9	14	25	65
Review	1	0	1	1	2	0	3	1	0	7	11
Total	1	1	3	5	4	3	11	10	14	32	76

Source: Author

In addition, the article's sources are examined. The 160 publications analysed in this study were published in 94 journals and covered a variety of disciplines, including Environmental Science, Engineering, Business, Management and Accounting, Social Sciences, Energy, and Decision Sciences. The top ten journals in which acronyms are used to indicate the reported journals are shown in Figure 2-3. Sustainability Switzerland published 14 articles, the greatest number of publications of any journal. Consequently, they are likely to become top-tier journals in the field of resilience-based sustainable supply chains, attracting numerous submissions in related areas. Many articles have not been published in supply chain and logistics publications like Supply Chain Management: An International Journal and Transportation Research Part E-Logistics and transportation review. It is anticipated that the number of

articles on resilience-based sustainable supply chains to be published in these two journals will increase significantly.

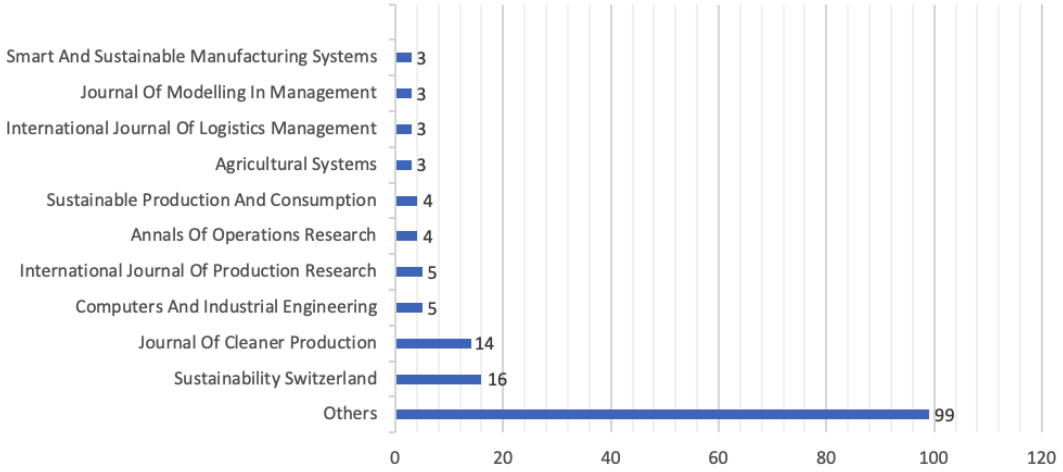

Fig.2- 3 Top ten journals with the number of articles.

Source: Author

The 106 publications evaluated in this study are from 54 nations, indicating that the topic of resilience-based sustainable supply chains has drawn the interest of scholars' interest and that research has been conducted on a global scale. Table 3 displays the eight nations with the highest number of published articles. The United Kingdom published 21.86 percent of all articles, placing it first worldwide. This is because resilience has attained national strategic significance in the United Kingdom. Various departments and municipalities have also produced pertinent documentation to aid in the creation of the resilience supply chain (Christopher & Peck, 2004). Therefore, academics are able to conduct a pertinent study on resilience. After the United Kingdom, India (26), the United States (26), Iran (24), China (14), Australia (11), Canada (10), and Italy (10) are the next most populous nations (9). However, it should be mentioned that the average number of citations in British articles is 22,40, which is lower than the average number of sources in American and Indian publications, which are both 27,46.

Table 2-3. Top eight countries with the number of articles.

Rank	Country	Count	Citations	Average Citations
1	United Kingdom	35	784	22.40
2	India	26	707	27.19
3	United States	26	714	27.46
4	Iran	24	241	10.04
5	China	14	158	11.29
6	Australia	11	283	25.73
7	Canada	10	85	8.50
8	Italy	9	42	4.67

Source: Author

2.1.2.2. Sustainable Supply chain themes

Regarding applying resilience to sustainable supply chains, scholars and practitioners have elaborated on three themes: impact, function, and configuration. This study subdivides these three topics into subthemes based on the characteristics of sustainable supply chain operations, as indicated in Appendix A1. These themes are used to organize the 160 articles.

The first theme, "Impact," comprises 39 articles or 24 percent of the total. Since research on resilience-based sustainable supply chains has just started, it is vital to describe the impact of resilience on sustainable supply chains to identify research opportunities. Most of these articles are still at the reasoning stage, implying that conceptual means are employed to explain the value, status, obstacles, and opportunities of resilience. For instance, Yamin (2021) explored the difficulties of adopting resilience in a sustainable supply chain by studying the primary drivers of a rising economy. Their research led to the developing of a model based on supply chain intelligence, communication, leadership commitment, orientation toward risk management, supply chain competence, and network complexity. The findings recommend that supply chain managers should focus on big data analytics, risk management orientation, supply chain communication and leadership commitment to improving supply network resilience and sustainable supply chain performance. Under the theme "Impact," fifteen articles have no specific application area (categorized under the sub-theme "Ordinary"). In comparison, twenty-three papers examine the impact of industry background, including agriculture, manufacturing, and service industries. In Section 4.5, more industries that have utilized resilience are explored.

Most articles, 59.4%, address the second theme, "Function." This theme is relevant to tackling the following problem: "Where will resilience enters the supply chain?" These articles examine the benefit of resilience in terms of "Impact" by focusing on the specific changes induced by resilience concerning a particular component. A survey of 63 papers reveals that resilience has permeated four dimensions: product (10), process (43), operation (36), and sustainability (26). The subtheme "Process" has garnered the most interest, with most articles focusing on "Logistics." Yazdanparast et al. (2021) suggest a feasible optimization model for producing drop-in biofuels using the current petroleum infrastructure. The model addresses potential supply and production disruptions and investigates four proactive measures to improve overall SC resilience: flexible supply contracts, infrastructure fortification, alternate production routes, and emergency inventory prepositioning. The study's findings demonstrate that the offered solutions effectively reduce logistical expenses. This phenomenon is consistent with the concept that supply chain flexibility and risk management culture are important resilience factors.

In contrast to the "Specific" subject with its several subthemes, there are numerous articles on "Vulnerability" and "Design." These publications address the effect of resilience on agility (Nayeri et al., 2021; Brooks et al., 2021) and inventory (Hosseinifard & Abbasi, 2018, Mardle & Metz, 2017). The

operational level has a direct effect on the total performance. The existing study examined operations from the top three perspectives of performance, strategy, and supplier.

Following the well-known triple bottom line (TBL) philosophy, the supply chain operation should prioritize economic advantages and consider the environment and society. To date, eight articles studied sustainability. 17 publications examined a single factor, environment and society (Miatto et al., 2021; Ritchie, 2021). Only six articles thoroughly examined all three elements (Nchanji & Lutomia, 2021; Jensen & Orfila, 2021). Therefore, the study of resilient-based sustainable supply chains considering the three dimensions of economics, society, and environment is currently insufficient, and Section 5 proposes research themes for future research.

Only six studies examine the topic "Configuration." The articles on this topic explore the concurrent use of resilience and emerging technologies such as the Internet of Things (McClements, 2021; Quayson et al., 2020), artificial intelligence (Li et al., 2021), and Blockchain (Naz et al., 2021). For instance, Li et al. (2021) created an intelligent platform based on service-oriented approaches with a practical case demonstration to handle fragmented management and inadequate connectivity in prefabricated building construction. The suggested Blockchain and all-inclusive ICT (e.g., Internet-of-Things, Cyber-Physical System, and Building Information Modelling) are combined to inspire new intelligent construction techniques. The supply chain for building prefabricated homes is anticipated to become more sustainable due to significant research and open research paths.

2.1.2.3. Research methodologies

This section examines the research approaches used to explore sustainable supply networks based on resilience. A survey of 160 publications identifies three research method categories: conceptual, empirical, and modelling. In Appendix A2, the 160 articles are categorised according to the three methods proposed. The number of articles that correspond to each of the four approaches are comparable. This conclusion demonstrates the existence of research potential, as research in related domains is still in its exploratory phase.

The second-largest number of publications, 61, falls into the "Conceptual" category, which is consistent with the emergence of a new research topic. To solve the stated topic, a general description, literature reviews, and theory are constructed and designated as "Conceptual," with most research being available descriptions. For instance, Ali et al. (2022) utilized dynamic capability theory to understand better how supply chain resilience maintains competitive advantages, specifically readiness, response, and recovery. The results are that excessive reliance on offshoring sometimes becomes lower supply chain resilience, especially amid unexpected and prolonged global shocks.

"Empirical" is the smallest category in research methodology, with a total of 38 articles, 19 of which are qualitative and 19 of which are quantitative. Various techniques, such as seminars, implementation experience, expert interviews, and case studies, are used in qualitative research to generate insights. For instance, Michel-Villarreal et al. (2021) examined the lessons acquired by adopters of resilience in the sustainable food supply chain by analysing two short food supply chains in Mexico. Lessons learnt from the case studies include low-cost digital technologies (such as freeware and social media) that can encourage adaptability, cooperation, transparency, and agility. In addition to the qualitative analysis described previously, several studies conducted "empirical" quantitative research, which involves creating and testing hypotheses, gathering data, and confirming hypotheses. Using empirical data from 278 interviewer-administered questionnaires and 13 in-depth interviews with village herds from Dumba, Mapayi, Old Nuli, and Shabwe, Gwaka and Dubihlela et al. (2020) investigated whether rural smallholder livestock farmers would use emerging technologies to improve the resilience of their operations. According to the findings, smallholder livestock farmers were shown to have an overwhelming need to adopt innovative technology. Emerging technologies have substantial and positive implications for decreasing supply chain risk and stock loss and theft risks.

In 38 articles, modelling methods were employed to answer research challenges. In particular, 12.5% of the publications included mathematical modelling, nonlinear programming, game theory, and mean-variance techniques. These methods seek to resolve issues using the outcomes of mathematical processes. For instance, Shafiee et al. (2021) studied the use of resilience for multi-objective mixed-integer programming, and the results showed maximized job opportunities and minimized costs, environmental effects, and delivery time. In addition, eleven studies utilised simulation modelling, whose objective is to simulate the application of resilience. For instance, Kaur and Singh (2019) established a disaster-resilient supply chain based on sustainable procurement, resulting in substantial cost reductions while optimising procurement and logistics under carbon emission limitations. In addition, 31 studies used multicriteria decision modelling approaches, such as fuzzy decision-making Mari et al. (2016) and fuzzy analytic hierarchy process similar to Jabbarzadeh et al. (2018). The multicriteria decision approach established the evaluation and selection criteria and success factors.

2.1.2.4. Illustration types

This study developed three illustrations to narrow the gaps in the research methodology stated in Section 4.3 and highlight the theoretical gaps and empirical perspectives of various writers. As stated in Table Appendix A3, three categories were developed: "Application," "Theoretical approach," and "Numerical instances." This table reveals that the majority of articles, 84 (53%), examine and verify the proposed theories by analysing case studies or applications of resilience. It is consistent with the notion that industry leads academia in the study of practice, as the industry has a long history of studying practice. For instance, Kayikci (2020) created a stream processing data-driven decision-making model for more excellent environmental performance and resilience in sustainable logistics infrastructure employing

fifteen variables and three related domains. According to the study's findings, the integrated multimodal logistics hub's environmental performance and resilience capacity is modest.

67 publications (42% of the total) employed a "theoretical approach"; this research addressed the theoretical gap by employing certain techniques or empirical approaches. This theme encompasses just qualitative empirical methods. The quantitative empirical approaches are categorised as "Numerical instances" due to empirical data. For instance, the study by Mwangi et al. (2021) falls under the "theoretical approach" category because the researchers determined that the sustainability and resilience concepts are interrelated through in-depth semi-structured interviews and a focus group approach with nine tea producer organisations in Kenya. However, Mondal & Roy (2021) designed the resilient supply chain network using empirical data from production centres and various hospitals during the COVID-19 pandemic. Consequently, their research falls under the "Numerical example" category.

9 papers utilised "Numerical examples" to demonstrate the efficacy of the established methodologies. This method is deemed appropriate for validating the study's hypotheses. Nonetheless, it should be noted that the limits of this approach cannot be fully understood unless it is used in real-world settings. Ivanov (2018) simulated a sustainable supply chain operation process based on resilience to discover sustainability variables that attenuate the ripple effect and improve it. The results demonstrated that the adaptability of suppliers and reconfiguration of regional storage facilities mitigates the domino effect and improves sustainability. Section 2.1.3.3 provides additional explanations of the theory and practice.

2.1.2.5. Industries addressed

The focus of research on the coupling of resilience and supply chains is on various industrial sectors. The review articles are classified as primary, secondary, and tertiary industries according to the North American Industry Classification System (Wang et al., 2021). Agriculture, forestry, fishing, and animal husbandry are primary industries, while secondary industries include manufacturing, light industry, building, etc. Tertiary industries include commerce, logistics, transportation, retail, etc. 34 out of 106 articles in Appendix A4 did not focus on a specific industry application, as shown by the category "None." These papers attempted to describe prevalent issues and the current research emphasis. 34%, 20%, and 19% of the articles on a single industry focused on the primary, secondary, and tertiary industries, respectively.

Agriculture has received the most interest, with studies on soybeans (Nchanji & Lutomia, 2021), maise (Ely et al., 2016), and tea (Mwangi et al., 2021), among others. The agricultural sector garnered the most interest. Two factors demonstrate the reasonableness of the worry for the agricultural field: The first reason is that, as a direct result of COVID-19, farmers worldwide have had sales difficulties, resulting in massive overstocks of agricultural products and food waste. Emergency responses can coordinate the interaction between emergency operations and agrarian production's logistical

requirements (Pu et al., 2021). The second factor relates to food safety concerns. The robust urban food supply chain is holistically evaluated to ensure that its citizens receive sufficient energy or macronutrients and that it functions pretty (Jensen and Orfila, 2021).

The second most extensive collection of publications examines three categories of secondary industries: manufacturing (Yazdanparast et al., 2021; CastaedaNavarrete et al., 2021; Fazli-Khalaf et al., 2021); light industry (Abdolazimi et al., 2021; Sahu and Sahu, 2019; Sahu and Kohli, 2019); and construction (Li et al., 2021; Ekanayake et al., 2021). Abdolazimi et al. (2021), for instance, focus on healthcare and non-cold pharmaceutical care delivery by utilising resilience solutions to overcome the inherent unpredictability of sensitive parameters. Two robust models were ultimately constructed to aid healthcare and pharmaceutical distributors in making better-informed decisions to reduce cost, lead time, and environmental consequences and improve their capabilities. Because the intricate structure of supply chains makes them susceptible to risk, most of the research focused on manufacturing. It is determined that the most pressing tasks are to reconfigure the company's resources, conduct real-time risk monitoring on the ground, and build a risk management culture. When these characteristics are strengthened, the supply chain's resilience can be enhanced, and the most significant risks of supplier delays, natural disasters, political instability, and poor supplier materials can be mitigated (Hsu et al., 2021).

The final group of studies examined the field of tertiary industry, which includes trading (Mondal and Roy, 2021; Kayikci, 2020), transportation (Cretan et al., 2012; Ramirez-Pea et al., 2020), retail (Elzarka, 2020; Suryawanshi et al., 2020), and so on. Implementing resilience in the commercial sector can result in cost savings while optimising procurement and logistics under carbon emission limits, among other advantages (Kaur and Singh, 2019). In addition to the specific industry sector, some scholars have researched multiple industrial sectors (i.e., an article contains two or more application scenarios), which is shown under the category "Multi-industry" (Hervani et al., 2021; Yamin, 2021; Diaz-Elsayed et al., 2020). It makes the conclusions more general and applicable for providing industry insights. For instance, Diaz-Elsayed et al. (2020) examined the supply chains for smartphones and fuel-efficient vehicles. They found that both resilient supply chains can facilitate a rapid recovery in emergencies or natural disasters. Yamin (2021) provided a summary of the primary factors for the supply chain's resilience by analysing the resilience drivers in several factories.

2.1.3 Research Trend

Section 2.1.2's findings and comments help to highlight study gaps and future research possibilities. Based on Sections 2.1.2.2 to 2.1.2.5, the following trends and opportunities in research are identified: (1) neglected themes in supply chains; (2) applied methodology in the research; (3) academic theory and industry practise; and (4) practise in various industrial sectors.

2.1.3.1. Ignored themes in sustainable supply chains

Compared to other subthemes, the discourse on sustainability appears to be restricted. The following shortcomings are uncovered after evaluating 26 sustainability-related articles: (1) Social dimension consideration is inadequate. The sustainable supply chain should consider all social criteria, including working conditions, occupational health and safety, human rights, and product safety. However, most publications focus on product safety, and only one article covers additional dimensions (Sumagaysay, 2017). Therefore, relevant research is required to enhance the indicators of the social dimension in the sustainable supply chain based on resilience. (2) Environmental concern is limited in scope. Waste management, energy efficiency, greenhouse gas emissions, and other environmental factors should be considered in supply chains. Most current research focuses on "Green," or lowering carbon emissions (Mari et al., 2016). A few papers (Govindan and Gholizadeh, 2021; Ayvaz et al., 2021) and types of study on energy efficiency discuss waste management (Mehrjerdi and Shafiee, 2021; Sharifi et al., 2020). In order to properly stress the role of resilience in supporting environmental management, more comprehensive environmental challenges must be investigated. (3) A deficiency in quantitative research. Since the majority of papers employ conceptual methodologies, quantitative research is judged insufficient. Presently, no research can systematically give a model for the performance of a sustainable supply chain in a resilient environment.

Produce, outsourcing, and order management should be the subject of additional investigation. The top five specific articles are logistics (Lotfi et al., 2021), performance (Adelodun et al., 2021), environment (Negri et al., 2021), strategy (McGrath et al., 2021), and design (McGrath et al., 2021) according to Table A1 (Pu et al., 2021). This occurrence is consistent with the importance of supply chain resilience examined in Section 2. The other topics stated in Table A1, such as production, outsourcing, and order management, which are vital for supply chain management, have gotten less attention (Ali et al., 2021; Vicente-Vicente et al., 2021; Zhao et al., 2021). Therefore, research on these themes should also be performed to meet the problems of supply networks based on resilience.

The configuration research receives less consideration than the effect and function topics. This circumstance may have three causes (Duan et al., 2020). The proliferation of the Internet of Things (IoT) devices has resulted in an exponential increase in the volume of data, which poses significant data storage challenges. The second factor is the transmission process's delay. Delay ensures the consistency of the entire resilience network but is unacceptable for many emergencies. Due to the vulnerability of the Internet of Things, supply chain network security and participant privacy are both worthy of consideration. The development and deployment of new technology, according to McClements (2021), can result in a more egalitarian, robust, and efficient food production system. They proposed that all stakeholders in the food supply chain should support deploying these new technologies if they are safe and effective. Therefore, researching a resilient and sustainable supply chain, particularly concerning data storage, information transfer, and blockchain network security, is a potential avenue.

2.1.3.2. Applied methodologies in the research

The research will be conducted using conceptual, empirical, and modelling techniques. The research prospects from the three approaches are examined in this section. First, since there have been more relevant studies, literature reviews have steadily grown to dominate research in the conceptual category. However, the existing literature review can be split into two groups: studies with an agricultural background focus and studies without a distinct sector background focus. As a result, there aren't many assessments of the literature on supply chain resilience in business, manufacturing, and other areas. Second, empirical qualitative methodologies are used in current research. Case studies and quantitative research should dominate the configuration of resilience in sustainable supply chains as this study becomes more in-depth. The relationship between supply chain resilience and sustainable supply chains can be strengthened, and associated theories can be proposed using conceptual and empirical techniques because supply chain resilience is still in its infancy.

The modelling category currently includes a lot of research opportunities, particularly in industries, in mathematical modelling, simulation modelling, and multicriteria judgements. There aren't many studies that explicitly apply supply chain resilience using mathematical modelling. The current focus of research is on the environment of supply chain resilience and identifying the variables impacted by resilience and their effects on the outcomes. For instance, Hervani et al. (2021) conceive a performance framework for businesses to measure supply chain social sustainability and resilience capacities strategically using the resource-based view. The outcome recommended using the performance measurement methodology to handle social sustainability and resilience issues in the supply chain to support their competitive advantages. Therefore, there is an urgent need for research that uses mathematical modelling and a managerial view to examine resilience technologies.

The papers that use simulation modelling bridge the gap between theory and practice. Only two of the six papers in the category for this theme replicate the whole supply chain activity (Kaur and Singh, 2019; Ivanov, 2018). Future simulation studies should therefore consider the flow of commodities, data, capital, organisational, production, and delivery processes (buying, inventory management, logistics management, etc.) involving suppliers, wholesalers, retailers, and carriers. 31 papers identify implementation success variables and resilience selection and evaluation using multicriteria decision-making models. The general conclusion must be applied to resilience practice because some research determining the drivers and barriers to successful implementation (Mithun et al., 2019; Rajesh, 2019) has gaps. A connection between these elements must be established by simulation or mathematical modelling, and fresh research needs must be found.

2.1.3.3. Academic theory and industrial practice

Theoretical gaps and empirical claims are validated in three types of papers, as shown in Table A3: those that fall under application, theoretical approach, and numerical examples. Through "Applications," 84 papers supported their hypotheses. The relevant research community generally accepts this method, and the research outcomes provide viewpoints for current academic and applied research. Scholars should study the following research options to investigate the relationship between academic theory and industrial practise.

Supply chain resilience has not garnered the interest of businesses, particularly small and medium-sized businesses (SMEs). The majority of the 19 case studies in the "Application" category cover the implementation of resilience strategies in cities and nations such as Leeds (Jensen and Orfila, 2021), Ghana (Vecchio et al., 2020), and the Upper Midwest of the United States (Miller, 2021), among others. Few articles discuss enterprise supply chains (Govindan and Gholizadeh, 2021; Abdolazimi et al., 2021). The occurrence of this event is typical, and due to differences in the level of cognition and infrastructure of enterprises, in a market that values profit, the income of enterprises is usually the focus of attention. Supply chain resilience can solve the current dilemma of enterprises, including market risks, sustainable development and innovation (Kwak et al., 2018; Negri et al., 2021). Therefore, establishing a supply chain is both an opportunity and a challenge for enterprises. Additionally, businesses should understand their benefits. A flexible organisational structure facilitates strategic deployment flexibility and reduces startup costs. Since enterprise research has recently begun, numerous issues can be considered: (1) How does the value of supply chain resilience differ across firms and city systems? (2) What are the barriers to corporate resilience implementation success? What are the similarities and variations between the systems inside the city?

When conducting academic research, it is essential to consider the perspectives of diverse populations. The fact that 67 papers employ the "Theoretical approach" methodology raises the question: can theory lead practice? Pagell and Shevchenko (2014) argued that academic research conducted by practice managers should better inform practical actions. Due to statistics, the certain study involves the junction of theoretical methodologies and numerical experimentation. The research on industrial practice utilised seminars, questionnaires, and interviews with experts to collect data. The interviewees are specialists such as (Soma et al., 2021; Moktadir et al., 2021), industry managers such as (Yamin, 2021; Kogler and Rauch, 2019), and supply chain practitioners such as (Mwangi et al., 2021; Gwaka and Dubihlela et al., 2020), with diverse academic and industry viewpoints. To acquire a broader perspective, future studies must include persons representing the government, other companies, and countries. The papers employing numerical experiments connect theory and practice, operating midway between "theoretical technique" and "real-world application."

The topic of sustainability merits additional consideration. In the area of numerical examples, nine articles addressed Efficiency or effectiveness when the objective function was constructed (Lotfi et al.,

2021; Mondal and Roy, 2021). However, only one of these publications (Mehrjerdi and Lotfi, 2019) in the sustainability theme category explored environmental factors, indicating an insufficient amount of relevant research on the theory and practice of the sustainability theme.

2.1.3.4. Practice in different industrial sectors

The tertiary industry gives opportunities to develop resilient, sustainable supply chains in the future. According to the survey results shown in Table A4, research on the resilience of supply chains considers primary, secondary, and tertiary businesses, demonstrating that supply chain resilience has broad applicability across all sectors. In addition, the proportion of studies about diverse industries is comparable. This conclusion shows that further research opportunities exist for examining resilience in many industries. However, the economy has evolved fast in recent decades, with a significant emphasis on tertiary businesses rather than secondary ones. Therefore, tertiary businesses will do more pertinent research to establish the value of supply chain resilience.

More industrial sectors ought to be investigated. Agriculture, manufacturing, and commerce have garnered the most attention in the subcategory of industries. The communication and coordination, reconfiguration, risk culture, and adaptability of resilient supply chains aid in resolving issues in these industries. Few studies concentrate on retail and construction (Elzarka, 2020; Li et al., 2021), and certain industries, such as animal husbandry in the primary industry, mining in the secondary industry, and cultural entertainment in the tertiary industry, have also been neglected. These industries also give the potential for future research.

2.2. Sustainable Supply Chain Management

Following a comprehensive review of resilience-based sustainability, it became apparent that the social and environmental dimensions were insufficiently studied (Section 2.1.3.1). This observation resonates with the broader trajectory of sustainable development, prompting an in-depth dialectical literature review based on previously conducted systematic analyses. The primary objective of this chapter is to bridge the identified research gap, elucidating the contemporary status of sustainable supply chains in exhaustive detail. The discourse encompasses two critical dimensions: sustainable practice and sustainable performance.

2.2.1. Sustainability and Triple Bottom Line

The Brundtland Commission's concept of sustainability (World Commission on Environment and Development, 1987, p. 8) is the most often used and largely recognised definition of sustainability. anything which "meets the demands of the present without jeopardising the ability of future generations to meet their own needs" Research based their depiction of the three pillars of sustainability as three interconnected rings on this idea, which they call the "Common three-ring sector perspective of sustainable development" (Giddings et al., 2002; Barton, 2000). Nonetheless, this framework gives

special attention to the ways in which the economy affects ecological and social systems. Rather of analysing how the economy, environment, and society are interconnected, they favour a technology solution to sustainable development problems (Giddings et al., 2002). As a result, social and ecological issues are often sidelined in the name of progress toward a better future. Therefore, Carter & Rogers (2008) argue that the environment, society, and economic performance are the three pillars upon which organisational sustainability rests. Elkington's (1998) concept of the triple bottom line, which examines and balances economic, environmental, and social goals simultaneously from a microeconomic perspective, is similar to this point of view. As a result, their concept quickly rose to prominence as a leading authority in the sustainable development community. According to this model, companies admit:

[...] is not simply a matter of good corporate citizenship – earning brownie points for reducing noxious emissions from your factory or providing health care benefits to your employees [...] Effective management today must incorporate the principle of sustainability (Savitz & Weber, 2006, pp. xiv).

In their paper "Nestled Sustainable Development," Giddings et al. (2002) demonstrate the nested relationships between the economy, society, and environment. Montabon et al. (2016) have created a similar model for SSCM. This type of thinking is known as "ecologically dominant reasoning." The economic system, they said, must take a back seat to the social and environmental ones. In this sense, the natural environment provides a broad framework or limitation within which the social system should operate, and the social environment provides a second restriction within which the economic system should function. This means that concerns for the environment and the public good must take precedence above economic considerations. Academics are constantly improving the appropriate framework to better use supply chain sustainability to achieve long-term development benefits, despite the fact that operationalizing sustainability in a company's supply chains may sound highly ambitious and tough.

2.2.2. Sustainable Supply Chain Conceptualisation

Extant definitions are analysed and compiled in Table 1. According to research on the most widely accepted definitions of SSCM, while all three components of the triple bottom line were specifically addressed, this was not the case for every definition. The concept of SSCM was developed, for instance, by Seuring (2008), who did so from a social and environmental vantage point. It is argued that integrating sustainable development and supply chain management will ensure that environmental and social considerations are taken into account at every stage of the supply chain, allowing for the avoidance of interconnected problems and the prioritisation of more sustainable products and procedures. When discussing the social side of sustainability, Wittstruck and Teuteberg (2011) emphasised the importance of ethics. In order to promote sustainability in the supply chain, they suggested a new model for SSCM that places special focus on ethical and environmental considerations.

Meanwhile, other scholars have included the idea of cooperation into it, with the reasoning that establishing a reliable link and working together with partners will improve the supply chain's efficiency (Badurdeen et al., 2009). A group of supply chain management guidelines upheld, actions taken, and linkages formed in response to environmental and social concerns regarding the development, procurement, production, distribution, use, reuse, and disposal of a company's goods and services, as for example, are discussed by Haake & Seuring (2009). Although this term is useful, it does not adequately capture the economic likelihood. Therefore, SSCM is defined by Wolter (2003) and Mariadoss (2016) as the integration of key inter-firm business processes to achieve social, environmental, and economic goals. The more comprehensive definition of SSCM offered by Seuring & Muller (2008, p. 1700) includes this idea: "the management of material, information, and capital flows as well as cooperation among companies along the supply chain while taking into account goals from all three dimensions of sustainable development, i.e., economic, environmental, and social, which are derived from customer and stakeholder requirements." This word is widely used as a benchmark in the SSCM discipline, with following research and definitions generally building upon its foundation. For instance, Esfahbodi et al. (2016, p353), Das (2017, p1356).

TBL, collaboration, and long-term benefits are the three cornerstones of this concept, as it have seen in the prior discussion. As was said before, traditional definitions of SSCM generally recognised the need to deal with these elements. While the topic of sustainability is often explored, many of the other qualities highlighted in this study have not been covered in detail elsewhere. Therefore, the term highlights the need to address the triple bottom line of economic, environmental, and social considerations as essential to achieving sustainability. However, only a few definitions express clearly the necessity for SSCM to embrace a long-term perspective (Carter & Rogers, 2008; Haake & Seuring, 2009; Pagell & Wu, 2009; Badurdeen et al., 2009); In addition, researchers seldom mention collaboration, despite its significance not just to sustainable development but also to the supply chain process (Badurdeen et al, 2009). Taken together, these factors allow us to propose the following definition of SSCM:

SSCM is a long-term development strategy that entails the management of raw materials, components, and processes from manufacturers to suppliers to final customers, as well as the product's recirculation through the product's lifecycle stages, and cooperation between companies along the supply chain, taking into account economic, environmental, and social goals.

Table 2-4. Conceptualization of Sustainable Supply Chain management

References	**Definition Characteristics**				
	Social	Environmental	Economic	Long-term	Coordination
Wolters (2003)	√	√	√		
Jorgensen & Knudsen (2006)	√				√
Carter & Rogers (2008)	√	√	√	√	√

Seuring & Müller (2008)	√	√	√	√	√
Seuring (2008)	√	√		√	
Ciliberti et al. (2008b)	√	√	√		
Font et al. (2008)	√	√	√		
Pagell & Wu (2009)				√	√
Badurdeen et al (2009)	√	√		√	√
Haake & Seuring (2009)	√	√			√
Spence & Bourlakis (2009)	√	√	√		
Wolf & Mujtaba (2011)				√	√
Closs et al., (2011)				√	√
Gupta & Palsule-Desai (2011)		√		√	√
Wittstruck & Teuteberg (2012)	√	√			√
Hassini et al. (2012)	√	√			√
Ahi & Searcy (2013)	√	√	√	√	√
Gualandris & Kalchschmidt (2014)	√	√			
Xu & Gursoy (2015)				√	
Hsu et al. (2016)		√		√	
Mariadoss et al (2016)	√	√	√		√
Esfahbodi et al. (2016)		√		√	
Das (2017)	√	√	√	√	

Source: Author

2.2.3. Sustainable Supply Chain Practices

To be sure, SSCM is a natural progression from green supply chain management (GSCM), which centred on environmental considerations (Ahi & Searcy, 2013). The SSCM practises proposed by many experts differ since the concept of SSCM is so broad. Exploratory factor analysis was used by Zsidisin & Hendrick (1998) to identify four GSCM factors; these factors were hazardous materials, investment recovery, product design, and supply chain relationships, and they were determined by surveying purchasing managers in Germany, the United Kingdom, and the United States. Five factors, including internal environmental management (IEM), good production practises (GP), cooperation with customers including environmental requirements (CC), eco-design practises (ECO), and internal relations, were identified by Zhu et al. (2008) as essential to the successful implementation of GSCM practises (IR). In their assessment of drivers and practises in one developing country, China, Zhu & Sarkis (2006) focus in on the automotive, thermal power, and electronic/electrical sectors. So that it may plan, build, and test a scale to evaluate how well SSCM is being implemented. Based on data from 293 Chinese businesses, Zhang et al. (2018) performed research on green supply chain management and corporate social responsibility and developed eight measuring scales to characterise the unique management practises of sustainable supply chain management. Researching whether or if SSCM practises are ecologically beneficial and financially feasible and determining the role of governance in the adoption of SSCM practises. For their study, Esfahbodi et al. (2017) used structural equation modelling using seven measurement scales to compile and analyse data from 146 factory managers in the United Kingdom. Environmental management practises, operations practises, supply chain integration, socially inclusive practises for employees, and community socially inclusive practises were the five pillars of SSCM practises created by Das (2017) based on the five elements of sustainable development. In addition, data from 255 organisations was gathered using a survey instrument that was

developed after reviewing the relevant literature. Furthermore, Mariadoss et al. (2016) proposed an integrative model based on stakeholder theory that incorporates the relationships between a firm's orientations and sustainable supply chain practises, as well as interactions between the various firm orientations in relation to such sustainable practises, and empirically tested their hypotheses in a survey of 149 managers in the US manufacturing and service industries. Hu et al. (2019) provided a comprehensive summary of sustainable practises related to the sharing economy, such as investment recovery (IGM), corporate social responsibility (CSR), internal green management (IGM), supplier green management (SGM), eco-design (ECD), and customer green management (CGM), in order to study the connection between green-related sustainable supply chain practises and consumers' motivation to participate in the sharing economy on sharing economy platforms (CGM).

As was made obvious above, several sustainable practises exist, each addressing a unique academic field. This study reviews the aforementioned and related literature and proposes the nine most relevant SSCM practise thorough evaluation studies to provide a more comprehensive and accurate knowledge of the connection between SSCM practise and SCR practise. The motivation to incorporate all three dimensions of sustainability into SSCM practises can be traced back to the introduction of the concept of TBL by Elkington (1998), the principles of equity in SD proposed by Haughton (1999), the ecologically dominant logic proposed by Montabon et al. (2016), and the concept of SCM. Even though SSCM scholars have published a number of measurement scales for SSCM practise, this research aims to provide a comprehensive measurement scale for evaluating nine synergistic management tasks. This study takes into account SSCM as an all-encompassing, multi-dimensional concept, which is evaluated using nine management methods drawn from a wide range of academic fields.

2.2.3.1. Sustainable Product Design (SPD)

Sustainable product development (SPD) entails making an effort for the product to be less harmful to the environment and easier to recycle. This may be done in a number of ways, including the use of more environmentally (Min & Galle, 2001). Conventional product design, on the other hand, is concerned only with meeting the demands of the target market in terms of functionality, quality, and cost (Ahmad et al., 2018). To improve a product's societal and economic performance over its entire life cycle — from production to disposal — while also reducing its environmental and resource impacts is the major focus of SPD (Gagnon et al., 2012). This shows that SPD is critically important in sustainable manufacturing processes. Sustainable industrial practises are those that can be maintained indefinitely, relying on inputs that have a low environmental impact and produce low levels of waste and pollution (Lakshmimeera & Palanisamy, 2013). SPD has been hailed as the sustainable production strategy by a number of studies (Zhu et al., 2008; Green et al., 2012) since it reflects the green activities included into manufacturing processes. Three aspects of sustainability have been identified as crucial in recent studies (Ahmad et al., 2018). In addition, Zhu et al. (2008) argue that SPD is the most crucial observable

aspect of sustainable products. Therefore, the study recommends implementing the SPD practise, which is a comparable reflection of the sustainable production strategy. Thus, the research hypothesis:

H_{1a}: Sustainable Product Design (SPD) positively reflects supply sustainable supply chain management in Construction sector.

The Chinese government is under pressure from new international regulatory compliances to ensure that all major enterprises' activities in the country meet environmental design guidelines (Zhu & Sarkis, 2007). Significantly, most Chinese construction firms work together with their suppliers and partners to efficiently carry out SPD-related projects. Construction firms operating in developing countries sometimes work in tandem with others to amass the required green resources, expertise, and capabilities (Jayarama & Avittathur, 2015). Some very large corporations that focus on serving industrialised nations' consumers are headquartered in China. As a result, Chinese businesses exporting products to countries with stricter environmental regulations must adopt SPD practises. Most of the top enterprises in the nation have adopted compliance issues such as lifecycle review of all products, reduction in material and energy consumption, and making sure that packaging materials are not only reusable but also contain a substantial proportion of recyclable materials (Zhu et al., 2010; Feizpour & Mehrjardi, 2014). This research will thus consider SPD from the following three angles: biodegradability; energy consumption; recycling; and toxicity of product components.

2.2.3.2. Environmental Procurement (EP)

Environmental procurement (EP) or green supplier management is a significant factor in the sustainability part of supply chain management (SSCM). EP is defined "the set of supply chain management policies held, actions taken, and relationships developed in response to environmental issues surrounding the design, purchase, manufacture, distribution, usage, and disposal of the firm's commodities" (Zsidisin & Siferd, 2001, p. 69). As a result, pollution control—also called an end-of-pipe strategy—has given way to cleaner manufacturing methods as the norm in environmental management (Manzini & Vezzoli, 2002). But much more drastic changes are needed to make the transition to a sustainable society. It's necessary to make adjustments at the consumer level (Manzini & Vezzoli, 2002). This adjustment is now often utilised in the state-of-the-art EP process. It is worth noting that public procurement inside the European Union typically follows the rules laid forth in the EU procurement guidelines. On the other hand, stakeholder and NGO pressure is a big impetus for businesses to adopt sustainable procurement practises (Powell, 2006). It has been observed that private firms often do not engage in green buying unless there are clearly stated financial advantages (Varnäs et al., 2009). Reducing waste, energy use, and material consumption are all potential benefits of green buying for private companies (Varnäs et al., 2009). Consequently, EP is concerned with waste reduction via the minimization of hazardous waste and material replacement via the proper purchase of raw materials (Min & Galle, 2001). It comprises collaborating with providers to make eco-friendly goods

and services (Carter & Carter, 1998). For businesses to improve their environmental performance, they need their suppliers' input, since they are the only ones who can ensure that the items the company buys are both ecologically sustainable and made in an environmentally responsible manner (Hsu et al., 2013). In other words, most large businesses work with their suppliers to purchase green products and services (Vachon & Klassen, 2008).

In order to meet rising environmental standards from both regulators and consumers, most of China's largest manufacturers have begun implementing sustainable procurement practises with their local suppliers (Zhu et al., 2010; Feizpour & Mehrjardi, 2014). In order to get green inputs, manufacturers often form inter-organizational partnerships with specific suppliers that have the requisite green resources and competences. By working together, companies may have access to the data and tools they need to create greener, more environmentally friendly goods and services. Therefore, supplier dependency is of highest value in the context of SSCM, as suppliers may supply businesses with green resources that aid in the deployment of SSCM practises and affect performance outcome. Thus, the research hypothesis:

H_{1b}: Environmental Procurement (EP) positively reflects supply sustainable supply chain management in Construction sector.

According to previous research, EP is an essential part of SSCM (Min & Galle, 1997; Zhu et al., 2008, 2013). According to Nagel (2000), the substance of EP includes environmental ideas such as eco-labels, the avoidance of environmentally hazardous chemicals, the recyclability of supply materials, and the environmental responsibility of suppliers. Certification and teamwork are two of the most important variables in this regard (Pagell & Wu, 2009). Ford, General Motors, and Toyota, three major automakers, have all required ISO 4000 certification among their Chinese suppliers (Zhu et al., 2008). In addition to working with primary suppliers, the European Parliament also evaluates the environmental accountability of secondary suppliers. For the sake of this research, "EP" refers to "the collection of purchase policies held, activities conducted, and supplier connections created in response to natural environment-related issues" (Zsidisin & Siferd, 2001, p. 69). Therefore, this research will look at EP from three angles: supplier certification, supplier communication and collaboration, and regular monitoring.

2.2.3.3. Environmental Customer Collaboration (ECC)

ECC or Customer Green Management is the process through which a company and its clients work together to create environmentally responsible practises and policies. Customers and the featured business are shown as equal partners. Manufacturing, resource management, and distribution may all be handled in an eco-friendly way by working together with customers (Zhang et al, 2018). When people think of "green supply chain," they often conflate ECC with one-way and control-oriented

activities like on-site audits, questionnaires, and other buyer requirements (Zhu & Sarkis, 2004). For this reason, the ECC will place more emphasis on environmental cooperation than environmental monitoring (Vachon & Klassen, 2006). Therefore, the working hypothesis is as follows:

H_{1c}: Environmental Customer Collaboration positively reflects supply sustainable supply chain management in Construction sector.

A synergy that encourages development along the whole supplier-to-customer supply chain is possible, claim Vachon & Klassen (2008), when businesses actively include their customers in environmental matters. Supply chain planning and the identification of environmental performance objectives must interact strongly for environmental collaboration to be successful. If you're a big client, you probably want your suppliers to be green saviours, too. As a result, there is substantial motivation for suppliers to work with the customer on environmental standards (GEMI, 2001; Zhu et al., 2008). Cleaner production, greener packaging, and optimising logistical resources are all examples of supply chain practises typically associated with ECC. ECC, as proposed by Vachon & Klassen (2008), can boost supply chain efficiency. As another bonus, a positive correlation between environmental performance and ECC is discovered (Zhu et al., 2013). Therefore, the production, packaging, and transportation sectors will be investigated as they relate to ECC.

2.2.3.4. Internal Green Management (IGM)

Green purchasing, customer cooperation, eco-design, and investment recovery are all GSCM practises that may be implemented after environmental sustainability is recognised as a strategic necessity and obtains the backing of upper and middle management, as stated by Green et al. (2012). Therefore, SSCM techniques like EP, SPD, ECC, etc. may be implemented with the help of IGM. In this thesis, integrated governance (IGM) is defined as the method of improving organisational environmental performance by means of top-down support, staff education, formal rules, and informal networks across departments (Zhang et al., 2018). For this reason, several studies have concluded that in order for a company to achieve environmental excellence, top management must be totally committed to the implementation of environmentally sound business practises (Zsidisin & Siferd, 2001; Green et al., 2012; Zhang et al., 2018). That's why it's crucial that the IGM leadership is fully invested in sustainability (Zhang et al., 2018). The use of green SCM practises was shown to be favourably affected by Zhu et al(2008) .'s discovery of IGM support. People management, internal design, corporate culture, and environmental investment are the four lenses through which this research will evaluate IGM. Therefore, Therefore, the hypothesis is as following:

H_{1d}: Internal Green Management positively reflects supply sustainable supply chain management in Construction sector.

2.2.3.5. Investment Recovery (IR)

One aspect of comparative GSCM practise for which there is study and data available is known as Investment Recoupment (IR) (Zhu & Sarkis, 2006). A new method of environmental management, IR is being used by both developed and developing countries to create closed-loop supply chains (Tibben-Lembke, 2004; Zhu et al., 2008). According to Zhang et al. (2018), IR may be obtained with the use of reverse logistics. The goal of investment recovery is to get back as much money as possible through getting rid of waste (Zsidisin & Hendrick, 1998). In addition to reusing or recycling unwanted or outdated goods, IR should consider selling any excess inventory or assets (Zhu et al., 2008). Profitable surplus sales can be achieved by employing investment recovery processes. Investment recovery often means recouping lost funds from unused goods or idle assets by selling them off or finding other uses for them (Esfahbodi et al., 2016). Meanwhile, Zhu et al. (2007) draw the conclusion that the positive impacts of IR on environmental and economic performance are statistically significant. This study proposes a comparable approach, using IR practise that is reflective of SSCM. Therefore, the hypothesis is as following:

H_{1e}: Investment Recovery positively reflects supply sustainable supply chain management in Construction sector.

In order to recoup the value of a lost investment, businesses must think creatively about how to put items that are no longer directly useful to the company to use. Disposal and investment recovery is generally delegated to buying and supply management since it is commonly assumed that those responsible for sourcing the required materials are also best suited to repurpose or otherwise dispose of the waste that is generated (Bird & Clopton, 1977; Johnson & Leenders, 1997). Investment recovery is a simple way to address both ecological concerns and fiduciary responsibilities. Burlington Companies' Raeford facility, for instance, processes raw wool, removing the grease, and then sells it to other businesses like the lipstick industry, where it is used as a raw material. For another, you may recycle or repurpose old industrial machinery by selling it (Giuntini & Andel, 1995). It is possible to recycle scrap by reusing it in-house, selling it to another business, a dealer, a broker, an employee, or returning it to its original source (Johnson & Leenders, 1997). Organizations like the National Association for the Exchange of Industrial Resources, Gifts in Kind America, the Institute of Scrap Recycling Industries, the Industrial Materials Exchange, and the California Materials Exchange, which is supported by the California Integrated Waste Management Board, all help investment recovery (Min & Galle, 1997).

Investment recovery has received less attention in China than in industrialised nations like the United States and Germany because of China's waste management policies and the lack of recycling networks in the country (Zhu & Sarkis, 2006; Zsidisin & Hendrick, 1998). While certain industries may lack adequate planning and implementation, Zhu and Sarkis (2006) discovered that the automotive industry really has a very high standard. In contrast, IR is concerned with recouping lost funds by selling off

unused or outdated assets (Green et al., 2012). Reducing by-product waste and emissions is the end goal of IR practises like resource reuse and surplus sales (Zhu et al., 2008). Since investment recovery sometimes entails the sale of surplus garbage and used materials as well as capital excess equipment, it can have an effect on a company's cost performance (Zhu et al., 2008). Investment recovery has the capacity to affect both environmental and economic performance, as highlighted by Zhu & Sarkis (2007), who also found a correlation between the two. Due to this, this research will look at IR from not one but two angles: that of excess assets and that of refurbished goods.

2.2.3.6. Diversity Management (DM)

Diversity Management (DM) refers to the strategic and conscious effort by an organization to create an inclusive environment that values, respects, and capitalizes on the variety of unique personal characteristics found among its employees. These characteristics include ethnic background, cultural heritage, nationality, and various demographic factors such as age, gender, religious beliefs, marital status, and educational level (Tajeddini et al., 2023). Effective DM aims to foster a workplace culture where this diversity is leveraged to enhance cross-cultural learning, knowledge sharing among employees, and innovation within the business, ultimately contributing to improved individual and organizational performance (Kaiser & Müller, 2015)

According to Carter & Easton (2011), a complete understanding of CSR and sustainability in the context of supply chain management requires a focus on environmental considerations, diversity, human rights, and safety. From this vantage point, Zhang et al. (2018) divide CSR into three categories: diversity management (DM), community development and engagement (CDI), and safety management (SM). An organization's dedication to diversity, as argued by Kacperczyk (2009), can have a beneficial effect on shareholder value in the long run. Purchasing from minority/women-owned businesses (MWBE) is seen as an important part of a more diverse supplier base (Carter & Jennings, 2004; Dollinger et al., 1991; Carter et al., 1999). The percentage of women and minorities (WM) employed as executives, the promotion of WM, and the contracting with MWBE suppliers are all ways in which diversity may be measured, as stated by Inoue & Lee (2011). Corporate involvement in diversity issues also has a positive effect on hotels' future profits, as Inoue & Lee (2011) discovered. This study suggests a similar approach by employing the DM, a comparative expression of social sustainability. Therefore, the hypothesis is as following:

H_{1f}: Diversity Management positively reflects supply sustainable supply chain management in Construction sector.

Additionally, diversity issues are factored into the Kinder, Lydenburg, and Domini rate, a prominent method for gauging CSR (Kacperczyk, 2009; Inoue and Lee, 2011; Berman et al., 1999). In particular, these five forms of KLD data have seen extensive use: First, there are challenges pertaining to

employees, products, communities, the environment, and diversity. At the outset, the KLD assigns a rating for the company's relationship with its employees based on factors like the availability of retirement benefits and cooperative labour relations. Two, the product quality ratings are based on how seriously a company takes its relationships with its customers, as seen by the quality and originality of its goods and the security of its offerings. Thirdly, a company's score in this category can be influenced by its charitable giving, educational programmes, and volunteer efforts to better the areas in which it operates. A company's environmental score reflects the amount to which it promotes environmental sustainability by doing things like reducing its carbon footprint, increasing its usage of renewable energy, and increasing its recycling efforts, among other things. Last but not least, the diversity ratings show how much a company values diversity in its management and operations by actions such as hiring and promoting women and people of colour and placing orders with businesses owned by women and people of colour. As a result, this research will look at DM from three angles: the equality of partners, the equality of workers, and the equality of customers.

2.2.3.7. Community Development and Involvement (CDI)

Gray et al. (1996) argue that society may be seen as an accumulation of social contracts between individuals and the society at large. Macrosocial and microsocial contracts are the two main categories of social agreements (Donaldson & Dunfee, 1999). The term "microsocial contracts" refers to more specific forms of community service, whereas the term "macrosocial contract" refers to the generalised social expectation that companies will contribute to their neighbourhoods (Moir, 2001). After surveying 115 companies, the CCPA (2000) concluded that community involvement is crucial to a business's long-term viability and that 75% of that surveyed supported community development. Most companies in the CCPA (2000) survey also saw CDI as a kind of CSR and connected to long-term economic benefits. To be more specific, CDI inclusive practises can be broken down into two groups: the first is socially inclusive practises for employees, which include providing for fair wages and perquisites, leave and other fringe benefits, and opportunities for growth, which will provide a solid groundwork for company employees to volunteer for local charities (Das, 2017; Welford & Frost, 2006; Hutchins & Sutherland, 2008; Zhu et al., 2016). The term "socially inclusive practises for community" is used to describe a business's efforts to improve its image among its constituents by fostering local economic growth and social cohesion through the provision of services like employment, training, and healthcare, as well as other social benefits (Hutchins & Sutherland, 2008; Zhu et al., 2016). As a result, this research will look at CDI from both the macrosocial and microsocial contracting viewpoints. Therefore, the hypothesis is as following:

H_{1g}: Community Development and Involvement positively reflects supply sustainable supply chain management in Construction sector.

2.2.3.8. Safety Management (SM)

It has been argued that CSR includes a focus on security issues raised by Carter & Rogers (2004). The concept of corporate social responsibility (CSR) as it applies to supply chain operations places a premium on safeguarding the health and safety of employees as well as the security of storage facilities and manufacturing areas (Ciliberti et al., 2008a). Leading global contractors, as reported by Wu et al. (2015), place a premium on occupational health and safety as part of their CSR key standards framework. In addition, the social part of the TBL is consistent with the approach utilised by Saunders et al. (2015), who substitute social sustainability requirements with safety requirements. In the construction sector, despite being more efficiently handled during the planning, design, and procurement phases of a project, social domain sustainability issues about worker safety are frequently left to the contractor and subcontractors to address during the implementation phase (Behm, 2005; Hinze & Wiegand, 1992; Huang & Hinze, 2006; Gambatese et al., 2005). Experiments have demonstrated that worker safety is "crucial to developing supply chain operations" (Edum-Fotwe et al., 2001, p. 161). In addition, building projects are "information-based supply chains" in which the quality and timeliness of specialised information exchanges between critical actors is a successful element for worker safety performance (Edum-Fotwe et al., 2001; McCreadie & Rice, 1999). Using safety as a stand-in for long-term benefits also enables you to quickly assess these claims using tried-and-true ways of measuring safety performance (Manuele, 2003). As a result, this research will look at SM from three angles: operational context, operational priority, and personnel. Therefore, the hypothesis is as following:

H_{1h}: Safety Management positively reflects supply sustainable supply chain management in Construction sector.

2.2.3.9. Reverse logistics (RL)

The goal of RL is to maximise output per unit of input by decreasing non-value-added activities. The quality revolution of the 1980s is echoed in the current view of waste as inefficient use of resources. Flaws used to be seen as an inevitable result of production, but now they are seen as a symptom of poor product and process design. A major step forward, the idea inspires companies to integrate quality into every step of their operations and to use creativity to boost output while cutting expenses. Waste often reveals flaws in product design or manufacture, therefore environmental concerns are a natural outgrowth of quality assurance. Total Quality Management (TQM) focuses on satisfying customer wants and needs (Lai & Cheng, 2005), however the ecological perspective tells us to frame flaws in terms of societal issues. In the same way that "zero faults" was central to TQM, "zero waste" is a major improvement since waste is generated internally in a processor either via usage or disposal of a product (Lai & Cheng, 2009). An eco-friendlier operating system is one that maximises efficiency (Corbett & Klassen, 2006). Consequently, the logistics of reverse logistics need a lot of time and effort from professionals in the field, which many businesses lack the personnel or funds to give (Lai et al., 2013). For this reason, it is important to coordinate with other organisations who have expertise collecting and processing abandoned objects for recycling. Reverse logistics, which includes investment recovery, has

been largely overlooked in China due to a lack of focus on waste management standards and an inadequate closed-loop infrastructure. Chinese authorities are looking at recycling and remanufacturing restrictions as landfills there continue to overflow (Zhu et al., 2007). In response, many Chinese businesses have started using end-of-life product management and other eco-friendly practises, either voluntarily or because they were ordered to. Therefore, the hypothesis is as following:

H_{1i}: Reverse logistics positively reflects supply sustainable supply chain management in Construction sector.

In a survey conducted by Rogers & Tibben-Lembke (2001), the most common practises for disposing of returned objects were found to be: resale "as is," remanufacturing or refurbishing, recycling or burial, repackaging, and recovering primary components. Lai et al., (2013) claims that RL includes activities such as recycling, refurbishing, and waste disposal. Reuse, resale, product upgrading (repackaging, repair, refurbishing, or remanufacturing), materials recovery (cannibalism, recycling), and waste management are the four disposal alternatives defined by Prahinski & Kocabasoglu (2006). (incineration and landfilling the product). Literature reviews will be used to investigate RL from six different angles: waste management, recycling, reuse, materials recovery, reprocessing, and design for RL.

Table 2-5. Measurement of Sustainable Supply Chain Management

Sustainable Supply Chain Management	**Reference**												
	This Research	Carter & Jennings, 2004	Das, 2017	Esfahbodi et al., 2017, 2016	Mariadoss et al., 2016	Wu et al., 2015	Lai et al., 2013	Dadhich et al., 2015	Zhang et al., 2018	Zhu & Sarkis, 2004	Zhu et al., 2008	Zhu et al.,2013	Zhang et al., 2018;
Sustainable Product Design (SPD)													
SPD1 Design of products for reduced consumption of material/energy	√			√						√			√
SPD2 Design of products for reuse, recycle, recovery of material, component parts	√			√						√			√
SPD3 Design of products to avoid or reduce use of hazardous products and/or their manufacturing process	√			√						√			√
SPD4: Consider the biodegradability of the materials used in our products (reverse coded)	√												√
SPD5 Consider sustainable alternatives to standard materials during design	√			√						√			√
SPD6 Consider the sustainable impact on the surrounding environment during the construction period	√												
Environmental Procurement (EP)													
EP1 Suppliers are selected using environmental criteria (ISO 14000 certification)	√			√						√	√		√
EP2 suppliers regarding the environmental objectives	√			√						√	√		√
EP3 Conduct environmental audit for suppliers' internal management	√			√						√	√		√

Sustainable Supply Chain Management	Reference												
	This Research	Carter & Jennings, 2004	Das, 2017	Esfahbodi et al., 2017, 2016	Mariadoss et al., 2016	Wu et al., 2015	Lai et al., 2013	Dadhich et al., 2015	Zhang et al., 2018	Zhu & Sarkis, 2004	Zhu et al., 2008	Zhu et al.,2013	Zhang et al., 2018;
EP4 Design specification to suppliers that include environmental requirements for purchased item.	√			√						√	√		√
Environmental Customer Collaboration (ECC)													
ECC1 Cooperate with customers for eco design and cleaner production	√			√							√	√	√
ECC2 Require supplier for environmentally friendly packaging	√			√							√	√	√
ECC3 Cooperate with supplier for reverse logistics relationships	√			√							√	√	√
Internal Green Management (IGM)													
IGM1 senior and middle-level manager committed to applying green supply chain management practices from senior managers	√				√					√	√		√
IGM2 Determine the environmental sustainability of the expected project life cycle	√				√					√	√		√
IGM3 Cross-functional cooperation to achieve environmental improvement	√				√					√	√		√
IGM4 Special training for workers on environmental issues	√									√	√	√	
IGM5 ISO 14001 certification	√									√	√	√	
IGM6 assess sustainability issues that may affect project completion	√											√	

Sustainable Supply Chain Management	Reference												
	This Research	Carter & Jennings, 2004	Das, 2017	Esfahbodi et al., 2017, 2016	Mariadoss et al., 2016	Wu et al., 2015	Lai et al., 2013	Dadhich et al., 2015	Zhang et al., 2018	Zhu & Sarkis, 2004	Zhu et al., 2008	Zhu et al.,2013	Zhang et al., 2018;
IGM7 Our internal performance evaluation system incorporates environmental factors	√			√								√	
IGM8 We aim to eradicate corruption in all its forms	√			√		√							
Investment Recovery (IR)													
IR1 Aim to sale of excess inventories/materials	√			√						√			√
IR2 Aim to sale of scrap and used materials	√			√						√			√
IR3 Aim to sale of excess capital equipment	√			√						√			√
Diversity Management (DM)													
DM1 All business enterprise suppliers have equal opportunity to become our partners (i.e., no difference regarding gender, nationality)	√					√							√
DM2 All workers have equal opportunity of employment with us (i.e., no difference regarding gender, nationality)	√					√							√
DM3 All workers have equal treatment and opportunity for promotion	√					√							√
Community Development and Involvement (CDI)													
CDI1 We strive to improve local employment opportunities for the local community	√		√		√								√
CDI2We continuously promote community education, public health and cultural development (e.g. employees volunteer for local charities)	√				√								√

Sustainable Supply Chain Management	Reference												
	This Research	Carter & Jennings, 2004	Das, 2017	Esfahbodi et al., 2017, 2016	Mariadoss et al., 2016	Wu et al., 2015	Lai et al., 2013	Dadhich et al., 2015	Zhang et al., 2018	Zhu & Sarkis, 2004	Zhu et al., 2008	Zhu et al.,2013	Zhang et al., 2018;
CDI3 We acquainted with local environmental laws and policies	√				√								
CDI4 We are involved in local community development plans (partnerships with government agencies and industry group)	√				√								√
CDI5 Use of child labour and forced labour is not allowed in our organization.	√		√										
Safety Management (SM)													
SM1 Conduct regular safety inspections on the warehouse, especially after special weather	√	√										√	√
SM2 Regularly conduct safety inspections and maintenance on our projects	√	√										√	√
SM3 Guarantee the health and safety of our staff at working environment (E.G. “zero harm” safety management)	√	√				√						√	√
SM4 Regularly provide safety training to our employees.	√	√				√						√	√
SM5 Employees are entitled to leave, provident fund, medical benefits and other facilities.	√		√			√							
SM6 Recognize the collective bargaining power of wage rates	√					√							
Reverse Logistics (RL)													
RL1 Look at solutions for the reverse flow of the materials after the end-of-life	√						√	√					
RL2 Looking forward to building carbon neutral buildings, which will involve	√						√	√					

Sustainable Supply Chain Management	Reference												
	This Research	Carter & Jennings, 2004	Das, 2017	Esfahbodi et al., 2017, 2016	Mariadoss et al., 2016	Wu et al., 2015	Lai et al., 2013	Dadhich et al., 2015	Zhang et al., 2018	Zhu & Sarkis, 2004	Zhu et al., 2008	Zhu et al.,2013	Zhang et al., 2018;
green sourcing, recycling and reusage of plasterboards													
RL3 Collaborate with their suppliers to reduce fuel consumption from underutilized routes (eg. Using the lorries and trucks on return journey to get both environmental and economic benefits)	√			√	√		√	√					
RL4 Track and monitor emissions caused in materials distributions (e.g., carbon footprint).	√			√	√		√	√					

Source: Author

Table 2 6. Exclude Reason of sustainable supply chain management

Measurements	Exclude Reason	Reference
Circular Economy Strategies	These strategies encourage the reuse, recycling, and regeneration of products instead of a simple produce-use-dispose approach. This can be substituted by Sustainable Product Design (SPD) because SPD ensures that products are designed for reuse and recycling from the outset.	Elia et al., 2017; Zhang et al (2018); Esfahbodi et al. (2017，2016); Zhu & Sarkis, 2004
Energy Efficiency and Emissions Reduction	This practice involves adopting technologies and strategies to reduce energy consumption and greenhouse gas emissions. This can be replaced by Internal Green Management (IGM), which uses internal management strategies to reduce energy consumption and carbon emissions.	Hafez et al., (2023); Zhang et al (2018); Zhu, Sarkis and Lai (2008); Zhu & Sarkis, 2004; Mariadoss et al (2016); Zhu et al., (2013)
Water Resource Management	This is the optimization of water usage strategies to reduce consumption and minimize pollution.This can be substituted by Environmental Procurement (EP) by purchasing water-saving products and services.	Zhang & Oki (2023); Zhang et al, (2018); Heydari et.al (2020)
Green Building and Architectural Design	This adopts environmentally friendly materials and design strategies to reduce the environmental impact of buildings. This can be replaced by Community Development and Involvement (CDI), which encourages community involvement in green building projects.	Nguyen et al., (2023); Zhang et al (2018); Das (2017); Mariadoss et al (2016);
Biodiversity Conservation	Actions are taken to protect and restore natural ecosystems and species populations. This can be aligned with Diversity Management (DM), as diverse management practices can raise organizational awareness about the importance of biodiversity.	Mabele et al., (2023); Zhang et al (2018); Wu et al., 2015
Zero Waste Initiatives	The focus is on minimizing waste, especially that which ends up in landfills or is incinerated. This can be replaced by Internal Green Management (IGM) and Reverse Logistics (RL), which work to reduce waste and encourage reuse.	Ahmed et al., (2023); Zhang et al (2018); Esfahbodi et al. (2017，2016); Zhu & Sarkis, (2004)

Adoption of Renewable Energy	This involves using alternatives to fossil fuels like solar, wind, and hydro energy. This can be taken up by Environmental Procurement (EP), which prioritizes products and services using renewable energy.	Sudarsan et al., (2023); Zhu & Sarkis, 2004; Zhu, Sarkis and Lai (2008); Zhang et al (2018); Esfahbodi et al. (2017, 2016)
Continuous Education and Training	This educates employees and stakeholders about the importance of sustainability. This can be replaced by Environmental Customer Collaboration (ECC), which shares and educates about sustainability with customers.	Lee et al., (2023); Zhu, Sarkis and Lai (2008); Zhang et al (2018);Esfahbodi et al. (2016,2017); Zhu et al.,2013
Product Lifecycle Assessment	This evaluates the environmental impact of a product from raw material to disposal. This can be substituted by Sustainable Product Design (SPD), which considers the product's lifecycle from the design phase.	Mouton et al., (2023);Zhang et al (2018); Esfahbodi et al. (2017， 2016); Zhu & Sarkis, 2004
Fair Trade Practices	This ensures that workers in the supply chain receive fair wages and working conditions. This can be replaced by IGM, ensuring fairness and ethics in the supply chain.	Kong, (2023); Zhang et al (2018); Zhu, Sarkis and Lai (2008); Zhu & Sarkis, 2004; Mariadoss et al(2016); Zhu et al.,(2013)
Carbon and Water Footprint Calculation	This assesses and takes measures to reduce an organization's carbon and water footprint. This can be substituted by Investment Recovery (IR), which evaluates the resource usage of the organization.	Wang et al., (2023); Zhang et al (2018); Esfahbodi et al. (2017， 2016); Zhu & Sarkis, (2004)

2.2.4. Sustainable Supply Chain Performance

There are essentially three components of SSCM performance that reflect the essence of sustainability in organisational performance: economic performance, environmental performance, and social performance. Researchers also included a few other variables. Operations performance was discussed in the works of Zhu et al. (2007; 2008; 2012), Esfahbodi et al. (2017), Green et al. (2012), and Zailani et al (2012). The environment was incorporated in the works of Zhu & Sarkis (2006), Esfahbodi & colleagues (2017), Zhu & Sarkis (2004, 2007), and Zhu and Sarkis (2004, 2007; 2008). References are made to studies conducted by Hutchins & Sutherland (2008) and Zhu & Zhang (2015) with regards to social performance. It turns out that there's a lot of overlap between the topics of economic performance and operational performance that different academics have explored. Furthermore, the connotation of the phrase "economic performance" is somewhat broad in character; consequently, this research has utilised the term "economic performance" rather than "operations performance" within the framework of organisational performance in the current study. In keeping with sustainable principles, this research assesses SSCM in terms of its environmental, social, and economic impacts. The factors of SSCM performance cited in the current literature were chosen such that they could be classified under one of the three categories of SSCM performance. Because of this, the items in this study were able to be better operationalized, and their efficacy was confirmed by empirical testing. This research expands the evaluation of sustainable performance. It adds operational efficiency performance to measure the effectiveness of green effectiveness innovations that are easily overlooked by the economy or the market.

2.2.4.1. Environmental performance (ENVP)

Companies that follow SSCM procedures are more likely to assess their impact on the environment. Various metrics are employed as gauges of success when assessing environmental initiatives. Solid waste, liquid waste, gaseous waste, and hazardous material discharge, as well as the cost of effluent treatment and release, and the occurrence of environmental mishaps, all decrease as a result (Zhu & Sarkis, 2004; Zhu et al., 2007; Rao et al., 2009; Harms et al., 2013; Esfahbodi et al., 2017). Additionally, Welford and Frost (2006) suggested cutting down on workplace accidents. Pullman et al., (2009) looked at protecting biodiversity, as well. The present assessment of environmental performance takes into account all of these aspects. Therefore, the hypothesis is as following:

H_{2a}: Environmental performance positively reflects sustainable supply chain performance.

2.2.4.2. Social performance (SCOP)

The Resource-based perspective of the firm states that a company's exceptional social performance may serve as a strategic asset (Barney, 1991; Grant, 1991). However, management must keep track of how much the investment in "community-centred social performance"(CSP) and "employee-centred social

performance"(ESP) has contributed to boosting employees' capacities and providing an enabling environment for the community before they can evaluate the firm's success on the social dimension for employees and the community. Business success in this area is commonly referred to as "social performance," which may be broken down into CSP and ESP. ESP is expressed in terms of corporate social image (Duarte et al., 2014), enhancement of opportunity in employment/business of the surrounding community, improvement in CSP is expressed in terms of improving the health, working conditions, and living conditions of employees (Welford & Frost, 2006; Hutchins & Sutherland, 2008; Zhu & Zhang, 2015; Mani et al., 2016; Zhu et al., 2016). The literature review's findings were adapted and included in the current study. Therefore, the hypothesis is as follows:

H_{2b}: Social performance positively reflects sustainable supply chain performance.

2.2.4.3. Economic performance (ECOP)

Manufacturing companies want to apply environmental management methods for a variety of reasons, including improved economic performance. According to earlier research, resolving environmental challenges might open up new markets for competitors and suggest novel ways to improve the value of existing core business initiatives (Hansmann and Kroger, 2001, Wagner and Schaltegger, 2006, Lai and Wong, 2012). Internal green management (IGM), for example, has been demonstrated in studies to be a corporate environmental management approach that has a positive association with an organization's financial success as part of "win-win" propositions (Gil et al., 2001, Montavon et al., 2007, Rao and Holt, 2005, Wong et al., 2012). Most businesses can benefit from an improved performance by using internal GSCM procedures like ISO14001 (Segarra-Ona et al., 2012, Prajogo et al., 2012). Long-term, sustainable management strategies can result in large increases in cash flows from operations, return on assets, profit before taxes, and sales (Ameer and Othman, 2012). Economic performance is demonstrated to benefit significantly from sustainable supplier cooperation (Hollos et al., 2012). Considering the numerous study results, the following hypothesis is put forth:

H_{2c}: Economic performance positively reflects sustainable supply chain performance.

2.2.4.4. Operation performance (OPEP)

Efficient cost cutting and increased productivity throughout the supply chain constitute economic performance. Organizations that embrace economic practises are likely to evaluate their economic performance in terms of assets and investments. Advanced operations management systems were found to significantly improve both mass operational and lean operational performance by González-Benito & González-Benito (2005). Multiple authors (Chen & Paulraj, 2004; Zhu et al., 2007; Pullman et al., 2009; Green et al., 2012; Wittstruck & Teuteberg, 2012; Zailani et al., 2012; Harms et al., 2013; Laosirihongthong et al., 2013; Esfahbodi et al., 2014) have recommended cutting back on energy use and associated costs. Additional logistical efficiency increases were used by Zhou et al. (2008).

However, economic and competitive factors are noted in the literature to include cost (Li et al., 2006), quality (Mitra & Datta, 2014), delivery dependability (Hu et al., 2010), and enhancements in productivity/capacity utilisation (Mitra & Datta, 2014). Modifications and additions to most of the previously stated objects were made for this investigation. Therefore, the following hypothesis is put forth:

H_{2d}: Economic performance positively reflects sustainable supply chain performance.

Table 2-7. Measurement of supply Sustainable Supply Chain Management Performance

Sustainable Supply Chain Management Performance (20)	Reference						
	This Research	Das, 2017	Esfahbodi et al., 2017, 2016	Zhu et al., 2007	Lai et.al, 2013	Kumar, 2018	Zhu et al.,2013
Environmental performance (ENVP)							
ENVP1 Discharge of toxic materials (solid and liquid and gases).	√	√	√			√	√
ENVP2 Company's environmental situation.	√		√				√
ENVP3 The biodiversity of the surrounding area.	√	√					
Operational performance (OPEP)							
OPEP1 Amount of goods delivered on time	√			√		√	√
OPEP2 Project quality	√			√		√	√
OPEP3 Capacity utilization	√						√
OPEP4 Reputation with customer satisfaction	√					√	
OPEP5 position in international marketplace				√			
OPEP6 Inventory utilization				√			
Economic performance (ECOP)							
ECOP1 Decrease of fee for waste discharge (include treatment)	√				√		√
ECOP2 Decrease of cost for materials purchasing	√		√				√
ECOP3 Decrease of cost for energy consumption	√		√				√
ECOP4 Decrease of fine for environmental accidents			√				√
ECOP5 Effective in handling recovery of assets related to our returned materials (include cost containment)				√			
ECOP6 Reduction of inventory investment				√			
Social performance (SOCP)							
SOCP1 Inequity in remuneration and other perquisites given to the employees of the same level.	√	√					
SOCP2 The differences in compensation package admissible to the employees of different hierarchy.	√	√					
SOCP3 The working environment of the organization and morale of its employees to a considerable level.	√	√				√	
SOCP4 The corporate image of the firm in terms of the same being responsible towards the community.	√	√			√		
SOCP5 The opportunities of the surrounding community in respect of employment/business.	√	√					
SOCP6 The literacy/level of education of the surrounding people.	√	√				√	

Source: Author

2.3. Supply Chain Resilience

United Nations Global Compact and BSR (2010) determined that greenhouse gas emissions, natural disasters, accidents, energy consumption, packaging waste, and environmental harm during logistics and transportation are significant sustainability-related hazards for many businesses (Sustainability, 2010). Environmental disasters, illegal or immoral practises, and product boycotts are among factors that raise questions about a company's capacity to remain in business for the long haul. Unfair work and labour practises, as well as a rise in commodities and energy prices as a result of fuel shortages, are the root causes of these problems in social justice (Anderson, 2005). Several high-profile scandals involving major corporations are discussed in the BSR (2010) report. The use of child or forced labour, mistreatment of animals, disregard for the environment, collusive pricing, allegations of bribery or fraud, and infringements on intellectual property are all examples (O'Callaghan, 2016). Many companies face serious risks from these kinds of uncertainty since they might damage their reputations and cause them to lose money. Different kinds of uncertainty are distinguished by the frequency with which they occur and the severity of the disruptions they cause to supply chain operations (Hosseini et al., 2019). Pettit et al. (2010) and Burnard & Bhamra (2011) both refer to these phenomena as high-impact/low-probability (HILP) occurrences.

Similarly, they provide another another all-encompassing, multi-dimensional idea to characterise the organization's capability or attitude toward HILP situations. The concept of resilience has generated a rich body of literature because of its relevance to fields as disparate as physics and supply chain management. To put it simply, resilience is the ability of an element or system to return to a stable state after being disrupted (Gunderson 2000; Burnard & Bhamra, 2011). Therefore, it may be possible to cultivate not just a tolerance for risk but also an innate ability to adapt proactively to environmental uncertainty via the emergence of resilience components within organisational systems. Because of this, businesses will not only be prepared for the challenges posed by high impact events, but will also be able to find opportunities and make money in the face of ambiguity. Thus, resilient organisations may fare better in the face of and while dealing with uncertainty (Burnard &Bhamra, 2011). So, applying the concept of resilience to increasingly complex SCs can help make SCs more sustainable. Thus, supply chain resilience is achieved by implementing a resilience plan into everyday operations in order to reduce the impact of HILP occurrences, protect SC continuity, and have the capacity to continually enhance SC operating level.

2.3.1. What is Supply Chain Resilience?

As defined by Christopher & Peck (2004) and other writers, SCR is "the capacity of an SC's system to return to its original or transition to a new, more desired state following a disruption." According to Sheffi & Rice (2005), SCR is "the company's capacity to absorb disruptions or allow the SCs network to return to state circumstances more rapidly," and it "has a favourable influence on firm performance."

SCR, as defined by Ivanov & Sokolov (2013), is the ability to both maintain and recover (adapt) scheduled execution while still attaining intended (or changed, yet still acceptable) performance.

Table 2-7 compiles the many definitions of SCR that have appeared in recent studies. Even if there are some differences among the SCR definitions that have been offered, there are also some commonalities. Several definitions, including agility, recovery, continuity, adaptive and desired level. Most definitions of SCR highlight the importance of proactively strengthening SCs by increasing their capacity to recover from interruptions (Kim et al., 2015; Pettit et al., 2010; Closs & McGarrell, 2004). To make advantage of this preventative method, it is vital to emphasise a crucial and matching SCR feature. Christopher & Lee (2004) argue that agility is one of the most valuable means of fostering SC resilience. Those who believe this argue that SC networks that can adjust to turbulent environments quickly have more resilience. According to them, SC networks with greater flexibility can respond to chaotic circumstances more quickly. Agility is the capacity of South Carolina businesses to respond quickly, efficiently, and cost-effectively to unanticipated supply or demand fluctuations (Wieland & Wallenburg, 2013).

However, before the process reacts quickly, the SCs should hold the ability to bear the result of the disruption, that is, adaptive ability. Absorptive capacity refers to all realisations that were implemented before the interruption occurred. It can be considered the first line of defence against destruction and reduce the necessary energy for recovery after destruction. According to Lücker & Seifert (2018) and Ivanov & Dolgui (2020), absorptive capacity is the ability of the system to absorb or withstand the impact of system disturbances and minimise the negative effects of damage with a relatively low energy or energy level. Namely, multi-purchasing, risk-reducing inventory and supplier segmentation were the common contingency mechanisms at this level. For example, Pepsi-Cola uses a spare packaging plant in the United States with a risk-reduced inventory to deal with the supply of coconut water from South Asia (Steenkamp, 2017).

Meanwhile, although many definitions underscore that the capability of SCs to recover and return to normal operations after a disruption is an essential factor of resilience (Longo & Oren, 2008, Falasca et al., 2008, Guoping & Xinqiu, 2010, Poins & Koronis, 2012, Roberta Peria et al., 2014, Ponomarov, 2012, Kamalahmadi & Mellat & Parast, 2016, Govindan et al., 2016), it is worth noting that some scholars believe that it should be restored to a desired level. This research also agrees with this view because the pursuit of greater resilience can ensure the continuous development of the supply chain.

Continuity is another essential feature, which is not only reflected in the preparation and operation before disasters but also an essential goal of the disaster response. Meanwhile, although some scholars consider time and cost issues in the definition of resilience (Ribeiro & Barbosa-Povoa, 2018), this research believes that the supply chain should naturally consider cost and time issues when considering

daily connected operations, followed by recoverin a desired level, these two aspects should be naturally improved as well. Thus, based on the above discussions, SCR may be defined as:

SCR is a capability of the supply chain to consider continuity in daily operations, and response unexpected events in emergency and recover a desired level after disruptions.

Table 2-8. Conceptualization of Supply chain resilience

Reference	Characteristics:				
	Agility	Recover	Continuity	Adaptive	Desired
Christopher & Peck（2004）	√	√	√		√
Gaonkar & Viswanadham (2007)		√	√		
Datta et al. (2007)			√	√	
Falasca et al. (2008)	√	√			
Ponomarov & Holcomb (2009)	√	√	√		√
Barroso et al. (2011)		√	√		
Jüttner & Maklan (2011)	√	√			
Ponis & Koronis (2012)	√	√	√	√	√
Carvalho et al., (2012)	√				
Melnyk et al. (2014)		√		√	
Brandon-Jones et al. (2014)		√	√		
Roberta Pereira et al. (2014)	√	√			√
Kim et al. (2015)			√	√	
Chowdhury & Quaddus (2017)	√	√			√
Ribeiro & Barbosa-Povoa (2018)	√	√	√		
de Lima et al. (2018)	√			√	√
Sharma & George (2018)	√	√			
Hosseini etc. (2019)	√	√	√	√	

Source: Author

2.3.2. Supply Chain Resilience Practice.

These studies provide various frameworks and techniques that are informed by the many definitions of Supply Chain Resilience. Using systems theory and the resource-based view of the firm as theoretical foundations and adopting a theory-building approach based on a multi-industry empirical investigation, Blackhurst et al. (2011) identified the three main components of resilience as human capital resources, organisational and inter-organisational capital resources, and physical capital resources. Then, they established empirical generalisations connecting 19 aspects of the supply chain to supply resilience. Azevedo et al. (2013) suggest an Ecosilient Index to assess the greenness and resilience of automobile companies and their corresponding supply chains, which would help close the gap between theory and practise. Research shows that the resilient paradigm improves the automotive supply chain's ability to compete. Having a flexible supply base/source and the ability to see the complete supply chain from end to end are two major factors contributing to resilience. Since Ambulkar et al. (2015) hold that an organization's focus on supply chain disruptions is inadequate on its own to build resilience, they investigate how resource reconfiguration mediates the connection between the two. Using a case study from an Indian automaker, Sahu et al. (2017) show how their multi-level hierarchical design can evaluate and monitor the robust performance of the candidate industry. Supply chain re-engineering, supply chain cooperation, instituting a culture of supply chain risk management, and supply chain agility are the major components of their index. This study also makes reference to the definition of

resilience and other resilience practises such as supplier segregation (Hosseini & Barker, 2016 Hasani & Khosrojerdi, 2016), multiple sourcing (Namdra et al., 2017; Lücker & Seifert, 2017; Bicer, 2015), inventory positioning (Turnquist & Vugrin, 2013), and multiple transportation channels (Kamalahmadi & Mellat-Para). Following Table 2-9 summary the supply chain resilience practice in four dimension and theoretical basis for the design of the questionnaire is indicated as well.

Table 2-9. Include Reason of Four Resilience Practice

Measurements	Include Reason	Question Design & Code
Communication and coordination (CC)	Supply chain vulnerability is a network-wide concept by definition, so risk management must also be network-wide	
Collaboration in the supply chain	Information exchange can reduce uncertainty.	CC1 We have regular communication with all partners
Strategy, tactics and operations	These trends and new issues may affect the continuity of the supply chain at some point in the future	CC2 Our leadership will analyze trends and new issues after the completion of the new project
The right company and supplier strategy	Disperse risks and reduce costs	Interview: How does the company identify and manage suppliers
Supply chain intelligence	The type of knowledge that establishes supply chain resilience involves identifying sources of risk and uncertainty at each node and link in the supply chain	Every supplier in our supply chain has a risk monitoring system (Delete) CC3 We have detailed instructions to guide the activities of general contractors, sub-contractors, direct suppliers and indirect suppliers.
Control System	The main function is to quickly detect faults and facilitate rapid corrective actions	We have an anomaly reporting system and forecasting tools for early awareness of impending outages (Delete)
(Re)Engineering (RE)	The supply chain is usually designed to be optimized for cost and customer service, and the "target function of the optimization function" is rarely flexible; Continuously adjust the supply chain to adapt to the new environment by absorbing new information.	
Supplier's risk awareness	Many companies also focus on cost and quality gains and ignore the importance of flexibility	RE1 We attach importance to the risk awareness of suppliers (usually take the company's own risk system as a reference)
Real Options Theory	Excessive use of current resources may affect the long-term interests of the organization	RE2 Our company's supply chain is fully prepared to deal with the financial consequences of supply chain disruption Interview: In the face of interruption, how will managers' decisions weigh the current and long-term interests RE4 We have a high degree of tacit understanding and long-term cooperation with stakeholders in the supply chain
Re-examine the "trade-off" of efficiency and redundancy	It may be extremely beneficial for creating resilience in the supply chain The coupling point and additional capacity (i.e., production, transportation, personnel) together can make demand uncertainty more effective management	RE3 We will strategically allocate additional capacity and/or inventory

Measurements	Include Reason	Question Design & Code
		Interview: How to weigh a company's material inventory
Culture (CU)	Just like the only way to achieve total quality management (TQM) is to establish a culture that makes quality a concern for everyone.	
Risk management team	1) Supply chain risks pose the most serious threat to business continuity; 2) Not every company represents its own supply chain management on the board of directors.	CU1 We have a department to manage supply chain risks and disruptions
Understanding and acting on the "maverick" message culture	1) Able to respond to interrupts in time; 2) Organizations that can allocate decision-making power and successfully motivate employees to be enthusiastic about the company's mission are fundamentally flexible	CU3 We have a professional corporate culture that successfully inspires stakeholders to be passionate about the company's mission. CU4 We know every detail of the engineering contract very well.
Almost missed method	Use small interruptions as an indicator of developing problems, thereby minimizing the risk of major interruptions	CU2 We value any degree of supply chain disruption that can show us what can be improved, and we will learn and think about how to avoid similar supply chain disruptions. CU5 We will regularly check the rationality of project design and construction. CU6 We regularly assess the impact of market and policy changes on projects and companies
Agility (AG)	1) Many organizations are at risk because they take too long to respond to changes in demand or interruptions in supply, which amplifies their losses; 2) Incremental agility can not only improve the organization's ability to respond to risks, and allow the composition to deal with risks calmly, and secondly, even in the face of interruptions, even if decisions are made, to reduce losses as much as possible.	
Conversion ability	It is not necessary to have the ability to produce all products in all factories to greatly increase its flexibility.	AG1 When needed, we can adjust the scope of supply chain operations to implement decision-making (our suppliers, logistics, and employees are usually able to meet multiple needs)
Comprehensive decision-making ability	The decision-making after the interruption will continue to solve the current problems and reduce the loss of long-term benefits. 1) Lead customers to products that they can manufacture with available components; 2) Demand for its products, thereby mitigating the impact of interference; 3) Looking for new sources of supply	AG2 Our company's supply chain is able to adequately cope with unexpected interruptions by quickly restoring its product flow AG3 We attach importance to communication with customers, and regularly review customer feedback to judge the value of decision-making.
Create a cross-disciplinary, cross-functional process team	The existence of the bullwhip effect will further distort visibility, and this effect will amplify the subtle changes in market demand back into the supply chain.	We have created a cross-disciplinary, cross-functional process team (Delete)

Measurements	Include Reason	Question Design & Code
Simplify the process, reduce the lead time of warehousing and reduce the time without added value	It can improve the response speed of the supply chain to changes in demand	AG4 On the premise of safety, we simplify the work process and reduce the activities that cannot generate value in the construction process (eg. Directly deal with buyers and suppliers to reduce the number of layers in SC.)

Source: Author

2.3.2.1 Communication and coordination (CC)

Integration SCR's communication and coordination (CC) approach involve supply chain visibility, coordination, and the exchange of relevant data. And to be even more precise, one of the most important things that can be done to lower supply chain risk is establishing a supply chain community where knowledge can be freely shared. Most businesses instead focus on forecasting demand, which forces them to make choices in silos. This information siloing leaves them vulnerable (Christopher & Peck, 2004). The authors of Lee et al. (1997) found that knowledge sharing considerably mitigated the effects of the bullwhip effect. According to Lee & Whang (2000), accurate data is crucial for efficient supply chain management.

On the other hand, working together to mitigate danger is a successful risk management strategy (Sinha et al., 2004). The openness of an organisation to share any and all information on risks and risk events is an example of the kind of collaboration that is closely tied to visibility (Faisal et al., 2006). It has been said that during times of crisis, collaboration is the glue that keeps supply chain organisations together (Richey & Autry, 2009). The ability to work together helps lessen worries and boosts preparation for each given event. Joint efforts across several supply chains with high cooperation degrees reduce vulnerability (Christopher & Peck, 2004). For efficient responses to system-level disruptions, supply chain collaboration's architectural features, decision synchronisation, and incentive alignment must be in place (Simatupang & Sridharan, 2008). After the first disturbances have been dealt with, Sheffi (2001) argues that it is just as vital for the parties involved to work together to share their knowledge. Visibility is the foundation of coordination, and it encompasses data about entities and events, including orders, stock, shipping, and distribution, as well as external happenings (Sheffi, 2001). Improving the supply chain's ability to see demand data can help mitigate potential problems (Chopra & Sodhi, 2004). By allowing everyone to see what's happening in the supply chain, visibility helps reduce the likelihood of a crisis being handled poorly (Christopher & Lee, 2004). In addition, having whole view of the pipeline ensures that the correct signals are detected promptly, which is crucial for being prepared for any incident (Van der Vorst & Beulens, 2002). In light of what has been said above, it should be no surprise that SCs should prioritise CC as an integrated practice if they want to reduce risk, especially information asymmetry. Therefore, the hypothesis for the study is:

H_{3a}: Communication and coordination (CC) positively reflect Supply Chain Resilience.

By working together, suppliers and buyers can lessen the chance of SC disruptions occurring in the upstream SC and mitigate the negative effects of disruption propagation throughout the whole SC (Hosseini et al., 2019). On the other hand, clear lines of communication reduce ambiguity and assist avoid wasteful delays in implementing countermeasures (Fugate et al. 2009). The need of clearly

specified communication protocols was highlighted, for instance, by Blackhurst et al. (2011). Additionally, six companies cited cross-functional risk management teams as a key factor in strengthening supply resilience. A supply chain that is optimised by a risk management team that includes members from many departments can better handle fluctuations in demand. Additionally, a mechanism for real-time data sharing is critical for facilitating collaboration and information sharing throughout the supply chain. Supply chain intelligence, as defined by Sahu et al. (2017), is the meeting point of supply chain management and business intelligence. IT infrastructure that allows for information to be accessed, integrated, analysed, and shared within and across organisations. The analytical application is crucial here; this is computer programme developed specifically for supply chain operations including purchasing, production, and shipping. Therefore, this study will examine CC from three perspectives: communication protocols; collaborative planning; and the intelligence of SCs.

2.3.2.2 Resource reconfiguration (RE)

A company's existence and success depend on its leaders' abilities to effectively manage resources and reallocate them in response to shifting market conditions (Sapienza et al., 2006; Sirmon et al., 2007; Davis et al., 2009). High-uncertainty events, or supply chain disruptions, interrupt the normal flow of goods and services along the supply chain (Bode et al., 2011). Due to the unpredictability of supply chain disruptions, there is uncertainty about the value and use of existing resources for developing skills that aid in disruption recovery (Craighead et al., 2007). When firms adapt to changing circumstances, they may discover new risks or opportunities, requiring them to update, reorganise, and realign their risk management framework. It has been shown that a company's capacity to reorganise and reconfigure its resource base is crucial for establishing competences that contribute to firm survival and growth during periods of high uncertainty, such as the production of a new product or the entry into a new market (Tushman & Anderson, 1986; Sirmon et al., 2007). Organizations need to reorganise and realign existing innovation resources and processes to boost their innovation capacity in reaction to changes in the market, as noted by Marsh & Stock (2006) and Helfat et al. (2007). Enterprises, as noted by Sirmon et al. (2007), must reorganise their resource base while facing environmental shock caused by industry discontinuities. That is to say, in order to develop the skills essential for thriving in an ever-evolving marketplace, firms need to do more than simply maintain the status quo in terms of their resource base. If a business is able to restructure its operations in response to a changing market, it may be better prepared to develop resilience against the effects of competition and other forms of disruption (Blackhurst et al., 2011). Therefore, the hypothesis for the study is:

H_{3b}: Resource reconfiguration (RE) positively reflect Supply Chain Resilience.

Human capital resources (Becker 1964), organisational and interior-organizational capital resources (Tomer, 1987), and physical capital resources (Williamson, 1975) are all subdivided into their own categories in this study to improve the effectiveness of the firm's resource reallocation strategy based

on RBV (Barney, 1991). The data analysis led to the discovery of several human capital features that increase supply resilience (Becker, 1964). These features included the ability to conduct an efficient post-disruption analysis, a well-educated and trained workforce, and an understanding of the whole cost of supply chain management. Education and training of supply chain employees was cited by six of the seven organisations examined by Blackhurst et al. (2011) as a key component in improving supply resilience. Organizational and inter-organizational capital resources, in addition to human capital resources, can strengthen supply chain resilience. These facets centre on the company's intangible assets, such as the relationships it has both internally and with its suppliers and other businesses (Barney 1991). Organizational and inter-organizational assets were uncovered through data analysis; these assets included clearly defined communication channels, cross-functional risk management teams, clearly defined contingency plans, collaborations with customs programmes and port diversification strategies, and the creation of supplier relationship management programmes (Blackhurst et al, 2011). Intangible assets, such as physical capital, also aid in supply reliability. The ability to manage risks at individual nodes (i.e., firms), the use of safety stock, technologies that increase visibility within the supply chain, systems that monitor the supply chain and predict weak areas, and the speed with which the supply chain can be redesigned when disruptions occur are all crucial (Liu et al., 2016). In light of this, this research will assess RC from the viewpoints of three types of resources: human, organisational, and physical capital.

2.3.2.3 Creating a supply chain risk management culture (CU)

The resilience and feasibility of the supply chain will improve with the institutionalisation of a risk management culture across the organisation. The concept of "supply chain continuity management" should be included into an organization's existing culture of risk management (Christopher & Peck, 2004). Any business or organisation worth its salt will have risk management baked into its daily operations and engrained in their company culture (Waters, 2007). Managing supply chain risks and disruptions is outlined by an organization's SCRM culture. Examples of such resources include the establishment of a specialised division to handle supply chain risks and disruptions, the creation of a corresponding information system, and the implementation of key performance indicators (KPIs) and metrics to track the effectiveness of the supply chain risk management and disruption management process (Ambulkar et al., 2015). Companies might benefit from a systematic approach to managing supply chain risks when they have ingrained a strong SCRM culture (Cooper, 1998). Benefits to the business include clearer job descriptions, more specialised work, the ability to train new employees, and more efficient communication (Perrow, 1986). When a company's supply chain is interrupted, the ability to respond quickly is essential, and growing task specialisation makes this possible. A speedy recovery may be possible with timely action (Blackhurst et al., 2011; Bode et al., 2011). If the company has a strong SCRM culture, it may learn from prior disruptions and apply that knowledge to future disturbances. Based on the idea that an organization's assets may fortify its supply chain against disruptions, we conceptualised SCRM culture as a three-item scale (Blackhurst et al., 2011). That there

is an internal resource (either a person or a department) dedicated to managing supply chain risks and disruptions, that key performance indicators and metrics are used to track the severity of supply chain risks and disruptions, and that information technology is used to monitor and respond to these threats all constitute SCRM culture elements. Therefore, the hypothesis for the study is:

H_{3c}: Creating a supply chain risk management culture (CU) positively reflect Supply Chain Resilience.

2.3.2.4 Agility (AG)

Agility is the capacity to survive in a situation where results are highly unpredictable (Prater et al., 2001). Many companies are put in jeopardy because it takes them too long to respond to changes in demand or disruptions in supply. Quickly adjusting to new conditions is a cornerstone of resilience, since it allows you to maintain your advantage even when times are tough. Inventory management issues can be alleviated when companies work with a supplier that responds quickly (Chopra & Sodhi, 2004). "agility," in particular the creation of reactive supply networks, is crucial for success in the present environment (Christopher & Towill, 2001). Evaluation or approximation findings can give a notion of a resilience index, but assessing one in practise is challenging (Das, 2017). on the other hand, may be used effectively when collaborating with suppliers and network partners to deliver the agility necessary to respond to disruption events (Soni, & Kodali, 2013). Consequently, this study recommends using the nimbleness that stands in for SCR. Therefore, the hypothesis for the study is:

H_{3d}: Agility (AG) positively reflect Supply Chain Resilience.

When referring to a service provider's (SP) ability to adapt its network architecture and operations strategy quickly to meet the changing and unpredictable demands of its customers, the phrase "SC agility" is frequently employed (Dubey et al., 2018). The authors Wieland & Wallenburg (2013) suggest that the concept of resilience may be split into two sub-concepts: responsiveness (represented by agility) and readiness (represented by robustness). They highlighted the potential for agility to increase SC resilience and its positive influence on the value given to the SC customer. In order to put agility into practise, four indicators were selected. A company's ability to quickly recover from a supply chain interruption depends on its reactivity, agility, and situational awareness.

Table 2-10. The Measurement of Supply Chain Resilience

Supply Chain Resilience Characteristics(11)	**References**									
	This research	Christopher & Peck (2004)	Sheffi & Rice (2005)	Blackhurst et al. (2011)	Ambulkar et al. (2015)	Gölgeci & Ponomarov (2015)	Chowdhury & Quaddus, (2017)	Adobor & McMullen (2018)	Altay et al, (2018)	Lohmer et. al (2020)
Communication and coordination (CC)		√	√							
CC1 Collaboration in the supply chain	√	√					√			√
CC2 Strategy, tactics and operations	√	√						√		
CC3 Supplier strategy	√		√				√	√		
CC4 Supply chain intelligence	√	√	√	√	√	√	√			
(Re-Engineering (RE)		√	√							
RE1 Supplier's risk awareness	√	√								
RE2 Real Options Theory	√	√				√	√			
RE3 Re-examine the "trade-off" of efficiency and redundancy	√	√	√	√	√		√		√	√
Risk management Culture (CU)		√	√							
CU1 Risk management team	√	√			√		√			√
CU2 Understanding and acting on the "maverick" message culture	√		√	√	√		√			√
CU3 Almost missed method	√		√	√	√	√				
CU4 Correct contract	√									
Agility (AG)		√	√							
AG1 Conversion ability	√		√	√		√	√	√	√	

AG2 Comprehensive decision-making ability	√		√		√	√			
AG3 Create a cross-disciplinary, cross-functional process team	√	√				√	√	√	√
AG4 Simplify the process, reduce the lead time of warehousing and reduce the time without added value	√	√				√		√	√

Source: Author

2.3.3. Supply Chain Resilience and Sustainable Supply Chain Management

After above discussion, it is easy to know an ever-increasing emphasis must now be placed on reducing disruption risks and achieving resilience in SCs as they get more sophisticated, and more tasks are outsourced. The current economy would not function without global SCs and transportation networks, which in turn affect issues of sustainability such as trade fueling, green consumption, and job rates. When planning a SC, it's important to think about how to cope with any disruptions in advance and plan for them if they happen. However, for sustainability's sake, it is more important to utilise single sourcing, less stored inventory, and less redundancy (e.g., various transportation systems) than it is to use the backup supplier, the capacity buffer, excess inventory, or multiple sourcing (Ivanov, 2018). Many scientists work to find solutions to the conflict between resilience and sustainability by building models that can weigh the pros and disadvantages of each (Fahimnia & Jabbarzadeh, 2016; Ivanov, 2017; Zahiri et al., 2017). The bulk of research have looked at the impact of SCR on SSCM, albeit from a system design perspective rather than a management one, despite the well-established interconnections between SCR and SSCM in real-world circumstances. This suggests that it is not obvious how the SCR procedures' SSCM activities will improve the organization's sustainable performance or how effective they will be. Identifying the important lean, green, and resilient practises on which senior management should concentrate to enhance the performance of automotive supply chains is one of the few empirical studies that explores the link between resilience and sustainability from a managerial viewpoint. That means that managers lack reliable lessons to guide their SCR and SSCM practices. Although there are various constructs in terms of SCR practice and SSCM practice and SSCM performance, their research does not contain various comprehensive constructs in their fields, respectively. This trend may lead to these studies generated narrow findings. As a result, this research carries on the above literature review to summarise the comprehensive and universal constructs in detail. Furthermore, Goh et al. (2020) through large literature review of construct industry, provide two main challenge. To begin, there is still a misunderstanding of what sustainability entails due to a lack of common terminology for referring to it. Second, it might be difficult to integrate an ecological perspective into national policy in countries with a high poverty rate. The selection of China's construction industry as the subject of this investigation was motivated by these two challenges. There is a dearth of research on SSCM and SCR in the Chinese construction industry, which is a major problem.

Another equally important question is how to explore the relationship between SCR and SSCM from a managerial perspective. It should be obvious that SCR and SSCM are deficient in the area of management. The major goal of the SCR strategy is to deal with potential dangers and unforeseen events (Christopher & Lee, 2004). Hence, SCR must show flexibility or agility while confronting unknown circumstances. The presence of these features in the dynamic capabilities view (DCV) (Lee & Rha, 2016) suggests that it may provide a satisfactory explanation. Furthermore, SSCM requires firms to flourish and expand in a changing economy. This is quite close to the role that dynamic capabilities

play in an organization, which is to seek a competitive edge for the organization in a constantly changing environment. More specifically, SSCM allows companies to pursue economic, social, and environmental goals while also implementing corporate responsibility practises (e.g., Gold et al., 2010; Carter & Easton, 2011) that enhance logistical performance and resource use. Constant shifts in supply chain arrangements are a major factor in this kind of corporate action, as they raise concerns regarding how and whether such shifts might contribute to sustainability (Halldórsson et al., 2009) and need strategic moves. It connects to the burgeoning field of management study known as the DCV. Thus, this thesis will thus investigate the connection between SCR and SSCM from the perspective of dynamic capabilities.

Dynamic Capabilities were first presented by Teece et al. (1997) to account for competitive advantage and performance in fast-moving, ever-evolving markets. Eisenhardt & Martin (2000) claim that DCs are the "[...] the ways in which a company puts its resources to work, particularly its methods of integrating, reconfiguring, acquiring, and releasing those assets so as to respond to and even drive shifts in the market. This means that dynamic capabilities are the procedures at the organisational and strategic levels that allow firms to achieve new resource configurations. " Reason being that SSCM allows businesses to pursue economic, social, and environmental goals simultaneously while also using corporate responsibility practices (e.g., Gold et al., 2010, Carter & Easton, 2011) to boost logistical performance and resource use. Therefore, Beske et al. (2014) set out to examine the connection between resource-efficient DC and SCs management. They think that whether DCs can contribute to sustainability will depend on how changes in supply chain structure play out, therefore it's important to be proactive. As the supply chain continues to evolve at a quick pace, the complexity of the environment and the processes involved may also increase, making dynamic capabilities a useful tool to help SCs gain an edge. On the other hand, dynamic capabilities are considered when a company develops a plan for dealing with uncertainty and implements a resilience capacity, such as increasing the organisation's adaptability. According to Lee & Rha (2016), dynamic capacity includes organisational resiliencies including adaptation, flexibility, and agility. These are crucial skills for navigating the ever-shifting landscape of today's global company. Unfortunately, it has yet to be thoroughly clarified how the dynamic potential of SC flexibility relates to supply chain resilience, which reduces the negative impacts of SC instability. Therefore, the purpose of this research is to examine how dynamic capacities shape the partnership between supply chain resilience methods and sustainable responsibility (RQ2a, RQ2b). Although this research observes that dynamic capabilities can be introduced as a theoretical basis to support the discussion of resilience and sustainability, dynamic capabilities are usually applied at the firm level rather than the supply chain level. Thus, in order to answer this question well, the next section will discuss what the dynamic capabilities in supply chain management are and what the value of the dynamic capability theory extension is.

2.4. Supply Chain Dynamic Capability

In today's turbulent times and rapidly changing business environment, companies must continuously develop and adjust their supply chain practices meeting society's and customer's needs and remain competitive (Christopher & Holweg, 2011). The original supply chain management method appears weak under the new challenges. At the same time, in an uncertain environment, the supply chain will face more and more uncertain factors due to various trends and changes, such as disruptions, technological developments and changes in consumer behavior (O'Keefe et al., 2016). These challenges drive the supply chain toward a dynamic managerial theory, dynamic capabilities are an indispensable element, usually understood as " (1) to sense and shape opportunities and threats, (2) to seize opportunities, and (3) to maintain competitiveness through enhancing, combining, protecting, and, when necessary, reconfiguring the business enterprise's intangible and tangible assets" (Teece, 2007, p.1319). However, the oversaturation of the literature on dynamic capabilities provides conflicting recommendations and strategies that hinder the adoption of dynamic capabilities in the supply chain (Pagel and Shevchenko, 2014). To alleviate this situation, companies should determine which areas of dynamic capability development are most relevant to them and formulate customized strategies and capabilities that suit them (Kähkönen et al., 2018). Therefore, from the perspective of the focus company, it covers a wide range of external, internal, and upstream and downstream activities in the supply chain to maintain the stability of enterprise development.

This study employs Teece's (2007) dynamic capabilities perspective to theoretically support Lambert & Cooper's (1998) supply chain management process. The theory model explains three kinds of dynamic capabilities for sustainable competition by four dimensionalities of the supply chain, including microcosmic, macroscopic, internal and external resources. Importantly, this does not appear to give a framework for sustaining competition management. Define the capabilities necessary to perform the dynamic capabilities of the supply chain in the current context. The notion of supply chain dynamic capability facilitates natural enhancement and competitive advantage. This section is guided by the research question, "What are the dynamic capacities of supply chain management?"

This section seeks contributions from a managerial perspective. Because this section has a clear theoretical goal, a critical review will be adopted, and the first part will discuss the methodology for exploring theory development (Section 2.4.1). Secondly, the ensuring literature review offers an expanded discussion of their interrelations to understand whether dynamic capabilities can be used in supply chain research (Section 2.4.2). Its contributions to dynamic capabilities are derived from the direct use of its three-development strategy for elucidating the rationale for supply chain management (2.4.3). While such capabilities are not new, this is the first time they have been evaluated and classified holistically concerning supply chain operations and the three dynamic capabilities. It is envisioned by applying the three dynamic capabilities in supply chain management processes to explain sustainability for supply chain competitiveness (Section 2.4.4). Then, to present explicit and clear recommendations for supply chain management contribution based on 12 metrics for distinct competitive sustainability

from operations to strategies (Section 2.4.5). Lastly, the contribution to measuring the dynamic capabilities of the supply chain is derived from the definition of the capabilities as comprising four dimensions of microcosmic, macroscopic, internal, and external resources from exploration and exploitation perspectives (Section 2.4.6).

2.4.1. Method to Develop Supply Chain Dynamic Capability

This section's objective is to define the dynamic capabilities required to support each of the three-supply chain dynamic capabilities. Conceptual research with three parts accomplishes this. Phase 1 provides a literature review and analysis to determine essential capabilities from SC-DC parallels. Phase 2 theoretically establishes supply chain dynamic capabilities frameworks by reducing, refining, categorizing, and sub-categorizing. The third phase confirms and reflects on the findings by reference to contemporary literature.

2.4.1.1. Phase 1 – Literature

As illustrated in Figure 1, the literature evaluation and analysis consisted of three stages. A standard literature review methodology accompanied by qualitative content analysis was employed. Content analysis is an efficient way of analysing and deriving meaning from text (Burla et al., 2008), making it an attractive tool for interpreting literature (Tranfield et al., 2003). The researcher might "expand a theoretical framework conceptually [...] to make predictions about the variables of interest or the relationships between variables, so assisting in the determination of the first coding scheme" (Hsieh & Shannon, 2005, p. 1281). Here, the DCs are conceptually expanded, and a content analysis of DCs and SCM literature produced predictions for the capabilities necessary to support each resource.

Stage 1 centred on DCs literature, utilising dynamic capabilities as keywords for literature searches. This allowed for an assessment of 21 significant DC articles published between 1991 and 2019. Most notably, this provided conceptual development of DC procedure. Despite the fact that the discussion of capabilities in these studies was limited, several implications of capabilities were nonetheless discovered. For instance, Teece (1997, 2007) makes explicit connections between the evolutionary process of dynamic capacities and organisation mechanisms, and sense, seize, and reconfiguration as a managerial routine is examined in depth (Teece,2007; Pavlou & El Sawy, 2011; Lee & Rha, 2016). Phase 2 aimed to investigate DC-SCM parallelism to extract additional capabilities. This facilitated review of 25 articles published between 2007 and 2017 that focus on both the DC and SCM. The work by Lee & Rha (2016) that interprets dynamic capacities management as competitive resources and describes the nature of sense, seize, and reconfiguration within the supply chain environment was very significant. Other studies provided a less clear explanation of capabilities, but implications were often recognised and bolstered by extensive repetition. In Stage 3, relevant SCM methods derived from Stages 1 and 2 were further explored in a DCs environment. This invited assessment of 93 SCM papers published between 1995 and 2017 extracts additional capabilities and ensures saturation. Relevant SCM

methodologies were used as search terms for the literature, and papers with an emphasis on capabilities were prioritised. Ambulkar et al. (2015).'s research on the firm's resilience to supply chain disruptions, which does not explicitly mention supply chain management, provided knowledge related to resource reconfiguration capabilities, for instance, by expanding on links found in Stage 2. In total, 113 capabilities were retrieved.

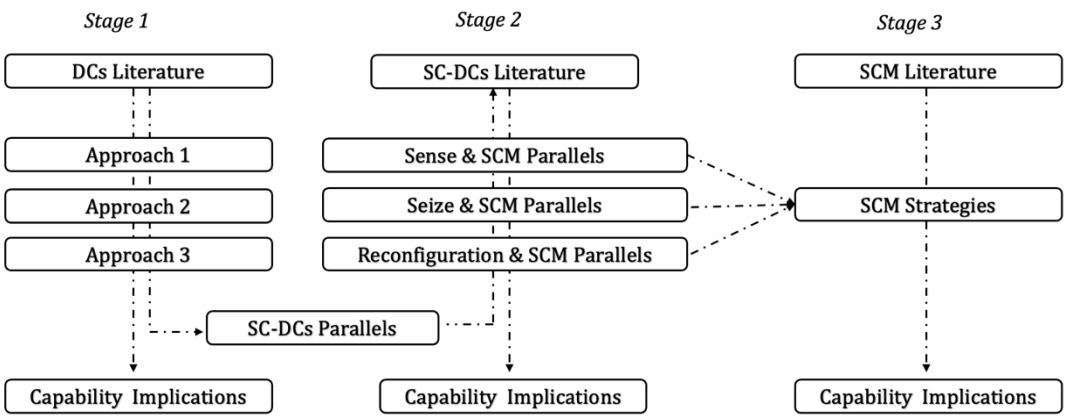

Fig.2- 4 Process of literature exploration and capability extract.

Notably, a precise definition of "capacity" was required to validate the derived capabilities. This study attempted to include participants from each of the three pillars. The resource-based theory defines capabilities as the capacity to deploy resources to accomplish a job or activity or to enhance performance (Teece et al., 1997) and emphasises managerial capabilities (Lockett et al., 2009). The dynamic capabilities activities of sensing, seizing, and reconfiguring was also helpful in defining the capabilities pertinent to this investigation. According to sustainable SCM literature, supply chain capabilities and dynamic capabilities are synonymous (Defee & Fugate, 2010). Consequently, Amui et al. (2017. p. 309) study of dynamic capabilities in the supply chain was useful, defining capabilities as "a characteristic, skill, or competence to learn, improve, and adapt."

2.4.1.2. Phase 2 – Analysis

"Without sufficient conceptualisation, it is impossible to make observations," asserts Ackroyd (2004, p. 143). The conceptual creation of dynamic capability frameworks was a three-stage, complex process. According to Gbrich (2007, p. 21), the initial stage includes classification, which allows data to be "separated, sorted, regrouped, and relinked to solidify meaning and explanation." The capabilities were classified as sensing, seizing, and reconfiguring actions. The second phase entailed lowering and refining extracted capabilities from the literature. It was necessary because many DC-SCM capabilities were similar, resulting in redundant and confusing naming. Some capabilities were renamed to reflect their dynamic role in their corresponding resource for clarity. It was accomplished manually, with researchers individually allocating skills to categories. The third step used the same procedure to

classify skills as internal versus external from a microscopic to a macroscopic perspective. It distinguishes resource exploitation from internalities (Penrose, 1959) and externalities (Barney, 2001) and answers calls for multi-level analysis to differentiate between microcosmic and macroscopic capabilities (Barney & Felin, 2013; Foss & Pedersen, 2016). Internal-external classification also recognises the importance of inbound and outbound activities to sustainable development (Malhotra & Mackelprang, 2012). In particular, internal and external capacities are necessary to adapt to sustainable competition (Dangelico et al., 2017).

The final conceptual definition of dynamic capabilities for the three DC resources evolved from these three phases of conceptual development. This procedure was significantly hampered by the cryptic presentation of skills in the literature, which provided little insight into their precise function. It means categorisation based on dynamic skills, microcosmic-macrocosmic distinctions, or internal-external focus was a lengthy, open-ended procedure. It was exacerbated by the fact that some talents applied to many categories. The reliability evaluation was crucial in this case. In greater detail, the researchers explored any discrepancies in coding or renaming, including the interpretation and additional literature review. Final conceptual development reduced the seventy capacities to twelve.

2.4.1.3. Phase 3 – Corroboration

In 2020, the conceptual frameworks were finalised. Phase 3 required further literature review for two reasons. Given the conceptual nature of the investigation, it is essential to validate the conceptual frameworks and demonstrate their trustworthiness. Second, to identify additional insights and new capabilities from the fast-moving nature of the field. Consequently, literature with explicit DC discussion was prioritised. This is an invited review of three significant publications from 2020 to 2021. de Moura & Saroli (2020) and McDougall et al. (2021) address three DCs for the sustainable supply chain management. For instance, Sandberg's (2021) research discussed sensing, reconfiguration, and seizing for logistics flexibilities. Literature detailing capabilities for supply chain operation outside of a DC setting was also instructive, requiring the examination of three additional vital publications. However, while these seven major publications supported the extraction of other capabilities, they did not provide further information. Instead, supplementary skills validated conceptual frameworks. It indicates saturation in the extraction of capabilities and bolsters conceptual development's rigour. Moreover, consultation with fresh literature confirmed DC-SCM parallelism and prompted consideration of the findings.

2.4.2. The Review of Dynamic Capability and Supply Chain Management

Following the three phases of the first phase, this part first discusses the definition of dynamic capabilities in this research. Then the rationale for matching dynamic capability characteristics with supply chain processes is discussed. Finally, this section discusses the necessity of extending and applying dynamic capabilities to supply chain management based on the characteristics of the supply chain.

2.4.2.1 Dynamic Capability Conceptualization

One definition of dynamic capability is an organization's ability to coordinate, establish, and reorganise its internal and external competencies in response to a rapidly shifting environment (Teece et al., 1997). To avoid the circularity of defining capability using capability, Eisenhardt & Martin (2000) provide a thorough definition from a process standpoint. They argue that dynamic capabilities are a unique set of activities that require resource use and include product development, strategic planning, and partnership formation. Zollo & Winter (2002), writing from the perspective of operational routines, define dynamic capabilities as a learned and permanent pattern of collaborative behaviours aimed at establishing and modifying operational routines. From an entrepreneurial standpoint, dynamic capabilities are defined by Zahra et al. (2006) as the ability to reorganise a company's resources and processes in a manner that is envisioned and regarded acceptable by the company's senior decision-makers. An organization's dynamic capabilities may be defined as its proactive capacity to develop, extend, or change its resource base, as described by Helfat & Peteraf (2009). Based on previous research, Barreto (2010) proposes that a company's dynamic capability consists of its propensity to see opportunities and challenges, to make timely and market-driven choices, and to modify its resource base. This tendency allows the company to tackle problems in a methodical fashion. Definitions from the literature are analysed and compiled in Table 2-11.

Table 2-11 Conceptualization of Dynamic Capabilities

Reference	**Characteristics**		
	Sensing	**Seizing**	**Reconfiguring**
Teece & Pisano (1994)	√	√	
Teece, et. al., (1997)		√	√
Eisenhardt &Martin（2000）		√	√
Zollo & Winter (2002)		√	
Zahra et al. (2006)		√	√
Wang & Ahmed (2007)		√	√
Teece (2007)	√	√	√
Helfat & Peteraf (2009)		√	√
Barreto (2010)		√	√
Li & Liu (2014)	√	√	√

Source: Author

Academics have deconstructed dynamic capacities from several perspectives, including content and process, ontology, and epistemology, revealing multifaceted content in the process of defining and explaining dynamic capacities (Helfat & Peteraf, 2009). Meanwhile, most academics use a process-oriented approach to deconstructing dynamic capacities, with some research breaking down the latter into components like sensing/perception, seizing/selection, reconfiguration/deployment, etc (Barreto, 2010, Helfat & Peteraf, 2009, Pandza & Thorpe, 2009). Most only choose two of these three features.

There will be more occurrences of seizing and rearranging in these two components (Eisenhardt & Martin, 2000; Zahra et al., 2006). Few academics use a definition that includes all three of these aspects (Teece, 2007; Li & Liu, 2014). The 3P architecture introduced by Teece et al. (1997) considers process, position, and route. They theorised that a business's competitive advantage lies in the quality of its management and organisation, which in turn depends on the rarity of the firm's assets and the ease with which its products can be distributed. The problem with this strategy is that it concentrates just on corporate behaviour without investigating underlying causes. For this reason, Teece (1998) offers a new paradigm that defines dynamic capacities in terms of opportunity detection and opportunity grasping. However, this method ignores the motivations behind business actions in favour of analysing the actions themselves. Therefore, Teece (1998) offers a different modeto explain dynamic capabilities, one that emphasises the importance of both the capacity to recognise and act upon new opportunities. After ten year, then realised the value of integration, and re-proposed and improved the new framework, which comprises sensing, capturing, and reconfiguration (Teece, 2007).

The concept works in an ideal market economy but may not hold in developing countries. For instance, Barreto (2010), in his analysis of adaptive capabilities, explains dynamic capabilities from four dimensions: the capacity to recognise opportunities and threats, make sound decisions promptly, focus on the market when making choices, and modify the organization's resource base. There is a need for improvement, even if Barreto's (2010) definition of dynamic capacity eliminates some major issues with earlier definitions, such as vagueness, ambiguity, and repetition and gives a logical conclusion for the prior definition. "Market-oriented decisions" may not reflect reality in countries like China, where the market process is flawed. It might be due to one of two probable causes. One is that China's product and capital markets are still in their infancy because of its ongoing economic transformation (Li & Liu, 2014). Governments at all levels, national and municipal, continue to play crucial roles in allocating resources. Companies must consider more than just market forces when conducting business, including political and relationship factors (or guanxi) (Park & Luo, 2001). Second, when people talk about their organisations' processes, they often talk about things like the "implementation" of strategy or the use of resources and talent (Helfat & Peteraf, 2009). In addition to recognising a need or opportunity for change and developing a response, Helfat & Peteraf (2009) argue that dynamic capacities also include the capacity to put that answer into action. Thus, this study defines dynamic capabilities as:

A dynamic capability is an organization's ability to systematically address challenges, based on its inclination to perceive a dynamic environment, make timely choices, and reconfigure its resources as needed.

This thesis' theoretical foundation is based on a conceptual framework composed of two subjects: SCM is the setting of the research, which will be a conversation between internal and external resources; DC is the theoretical foundation, which gives two types of theoretical support, microcosmic and

macrocosmic. The DC applies the supply chain management idea of Lambert & Cooper (1998) to a sustainability setting (Defee & Fugate, 2010). According to the DC theory, enterprise growth results from discovery and use (March 1991). Teece (1997) theorized three of these abilities in his seminal article: learning, reconfiguration/transformation, and coordination/integration. Following reconceptualization defines three interaction capabilities: Sense, seizing, and reconfiguring (Teece, 2007). This study assumes the third, fourth, and fifth viewpoints of dynamic capacities. It acknowledges sense as the capacity to examine systems (and one's capacities) to learn, perceive, filter, shape, and calibrate opportunities (Kurzhals, 2021; Teece, 2007; Lee & Rha, 2016). Considered capable of modifying and replacing business models (Teece, 2007; Lee & Rha, 2016; Sandberg, 2021). Reconfiguration entails redesigning the business model, asset reorganization, and standard operating processes (Teece,1997; Teece, 2007; Eisenhardt & Martin, 2000; Lee & Rha, 2016; Sandberg,2021). In addition to supporting the reaction of a dynamic market for competitive advantage, applying these three capabilities to SCM provides a distinction that enables businesses to build sustainable strategies to their requirements.

The emphasis should be placed on SCM and distinguished from supply chain dynamic capabilities and dynamic corporate capabilities. Several research (Beske, 2012; Beske et al., 2014; Li & Liu, 2014; Seifert, 2015; Lee & Rha, 2016; Cherrafi et al., 2018; Sandberg,2021; de Moura & Saroli, 2021) have applied the DC to supply chain management to support environmental operation competitiveness. In such studies, Sense, Seize, and reconfiguration predominate, but supply chain management features and methods are rarely mentioned. Moreover, emphasising these three types of skills disregards their respective microcosmic and macrocosmic viewpoints. SCM consists of internal and external components that facilitate the use of DC's micro and macro views. According to Faisal (2010), a dynamic supply chain capability is difficult to imitate and, following the theory of dynamic capabilities, competitively advantageous.

While DC theory attempts to promote SCM adoption, SCM also promotes DC theory. The DC is a prominent theory in SCM (Defee & Fugate, 2010; Beske, 2012; Beske et al., 2014), however, it lacks practical application (Sandberg, 2021; de Moura & Saroli, 2021), creating a theory-practice gap (McDougall et al., 2021). Specifically, the characteristics necessary to support the implementation of DC theory have yet to be described. In DC theory, microcosmic skills play a vital role in competitive exploitation (March 1991; Teece, 2007). Scholars have long sought a definition and explanation of capabilities in competitive resources (Li & Liu, 2014; Seifert, 2015; Lee & Rha, 2016), and supply chain dynamic capability is no exception (Sandberg,2021; de Moura & Saroli, 2021; Gunasekaran & McGaughey). In contrast, SCM benefits from widespread applicability and significant study around its deployment (Lambert & Cooper, 1998, 2000). Consequently, SCM provides vital insight into capabilities that may aid in developing DC theory. It is acknowledged in contemporary supply chain

literature, which contends that certain capabilities are required to construct supply chain capabilities (Sandberg, 2021; de Moura & Saroli, 2021).

2.4.2.2 Dynamic Capabilities and Supply Chain Management

While the preceding section illustrates the synergies between the SC and DC, the links between the DC and SCM are not new. Standard DCs literature relies on the supply chain (Teece, 2007; Li & Liu, 2014). Sustainability (Seuring & Müller, 2008) and competitiveness (Prajogo & Sohal, 2013) are achieved via the supply chain, not by the company. Consequently, competitive utilization of sustainability resources necessitates operational assistance. It has sparked interest in the connection between operation capabilities and the supply chain. Defee & Fugate (2010), for instance, examine dynamic supply chain capabilities to build a sustained competitive advantage. Lee & Rha (2016) provide a practical explanation of dynamic capacities to complement theoretical frameworks of supply chain management and investigate supply chain disruption mitigation solutions. Sandberg (2021) develops a conceptual framework for constructing logistic flexibility based on dynamic capacities. Nonetheless, none of this research conceptualizes particular alignments between each of the three DCs' personalities and their respective SCM tactics.

As previously said, such a conceptualization is a beginning point for defining supply chain dynamic capabilities, building on the vast applicability (Gunasekaran & McGaughey, 2004; Olhager, 2010) and considerable study (Lambert et al., 1998) of SCM. SCM capabilities have not yet been properly linked or categorized based on the three DCs' characteristics. It is advantageous for SCM as the three skills provide differentiation and competitive SCM exploitation. This proposes a novel framework for SCM that promotes sustainability for competitiveness in contrast to decoupling points (Olhager, 2010) and operation strategy (Hill & Hill, 2009). It is consistent with current literature that argues for adopting DC in supply chain management to enhance competitiveness (McDougall et al., 2021; Sandberg, 2021).

Sensing is "a scanning, creating, learning, and interpreting activity" (Teece, 2007, p. 1322) that identifies opportunities through entrepreneurial access to current information or the development of new information. It is often done to promote market-searching activities, predict market trends, and shift client requirements (Gebauer, 2011). It is consistent with the resource-based theory's deliberate learning (Zollo & Winter, 2002) to find competitive exploitation chances from organizational actions (Penrose, 1959) or external opportunities (Barney, 1991). It promotes identifying short- and long-term prospects at the micro and macro levels. In a supply chain context, it gives a wealth of knowledge to seize fresh opportunities (Cheng et al., 2014).

The activities of exploitation determine which "sensed" chances to invest in growth and profitability (Teece, 2007). This is a challenging and risky process that requires developing and implementing new business models. It can support management to make rational decisions efficiently (Zollo & Winter,

2002). Considering the micro and macro, seize activities can be distinguished into routine-based management decision-making, and high-level awareness-based strategic decision-making. In short, it enables the supply chain to "change the business environment, the resource-base of the supply chain or to adapt from sudden changes" (Beske et al., 2014, p. 141).

By reconfiguration resources to improve, combine, or safeguard capabilities, reconfiguration activities fuel path-dependent organisational evolution (Teece, 2007). It renews resources to adjust to shifting markets and increase the viability and validity of competition. It is ongoing and requires internal learning and competence development (Gebauer, 2011). In the micro and macro context, reconfiguration activities are embedded in the short-term and long-term decisions to support continuous evolution and competitive leveraging (Strauss et al., 2017). It drives organisational learning in a supply chain setting (Yang et al., 2018) to develop more agile and responsive supply chains (Miemczyk et al., 2016).

In this study, applying the three dynamic capabilities activities provides a framework to categorise capabilities taken from SCM to enable the micro and macro views. From a micro-and macro-theoretical point of view, activities represent organizational conventions (Pentland et al., 2012; Becker, 2004;) and organizational capabilities (Zollo & Winter, 2002). In addition, this is also consistent with the "strategic task" (Cheng et al., 2014) that the supply chain literature regards dynamic capabilities as a strategic basis (Sandberg, 2021) and maintains competitiveness (Dangelico et al., 2017). To the best of author knowledge, this is the first explicit application of micro and macro views to sensing, seizing and reconfiguration activities in dynamic capabilities.

2.4.2.3 Supply Chain Management Process and Character

Successful supply chain management (SCM) means moving from managing individual functions to integrating activities into key supply chain processes, such as turning materials and parts into finished products and the logistics of getting these products to market (Lambert & Cooper, 2000). In the past, the upstream and downstream parts of the supply chain talked to each other as separate entities and only got small bits of information from each other at random times. Gradually, the purchasing department places orders when necessary, does marketing based on what customers want, contacts different distributors and retailers, and tries to meet this demand. But in the current market, it's getting harder and harder to define this demand. Do people want more or better? Usually, the need is shown in the supply chain as a number. As information technology improves over time, finding a reasonable demand for quantity becomes easier, so this demand gradually shifts to one for quality. In the fierce market competition, supply chain innovation is also becoming more important. It is mainly shown by how key businesses find new suppliers and complements that can work together and develop new ideas. This characteristic is consistent with the characteristic of dynamic ability Sense (Teece, 2007).

In addition to Sense in guiding enterprises how to effectively update effective information, the role of Seize ability in decision-making is also essential, and this is also required for a successful supply chain. Lambert & Cooper (2000) think for an integrated supply chain to work, there needs to be a constant flow of information, which helps make the best product flow. But the best way to keep making the best product flow is to figure out how to grasp the most important parts of this huge amount of information and use them to make the best product flow. The focus of the process is still on the customer (Mentzer et al., 2001). For an excellent customer-centred system to work, information needs to be processed quickly and correctly so the system can respond rapidly. Also, these systems need to be changed often to keep up with changes in customer demand and to change the system's configuration to keep up with changes in customer demand. This process also requires the supply chain to have reconfiguration capabilities (Teece, 2007).

Controlling the unknowns in customer demand, the manufacturing process, and supplier performance is important for SCM to work well (Lambert & Cooper, 2000). But as time has passed, controlling costs is no longer the only way to judge the quality of the supply chain. Once, Kodak and Nokia also had supply chains that made their competitors green with envy, but they stopped competing in the market. From the supply chain's point of view, what is their problem? In other words, the cost of trying things out and seeing what works is too high in the modern world. If their supply chain gives them chances to change their business strategies on time, they might be able to stay in business in today's market. Therefore, this study believes that it is necessary to understand if their supply chain is to change, what kind of capabilities should they have or what are the determining factors?

The coronavirus is also a reminder that successful supply chain management is not only able to meet the above-mentioned capabilities, but also should consider globalization and social responsibility in its characteristics. Supply chain management has a global effect and is causing immediate problems with the flow of goods and inventory. Scholars have been looking at this risk in global SCM networks for a long time, but since the pandemic stopped working, the new SCM risk dialogue has become the most important topic. SCM risk research mainly focuses on operational risks that threaten inventory investment and supply chain costs (Sodhi et al., 2012).

During the COVID-19 pandemic, many consumers took advantage of the widespread media attention in consumer markets to meet demand, resulting in multiple supply chains failing to bring products to market, especially for hand sanitiser, cleaning supplies, and toilet paper (Baker et al. People, 2020). It makes it worse when consumers misunderstand demand. When suppliers should put more goods on shelves quickly, they fill all the frames with stuff people don't need, wasting resources and making companies charge higher prices. Suppliers and supply chain operations should be thinking about how to stock those shelves, even if it pays off the cost of on-time stocking very well. Therefore, this study

believes that successful supply chain management is to operate the entire supply chain skillfully according to the company's understanding of the market to meet consumers' needs gradually.

Also, the person in charge of the supply chain must pay attention to the door-to-door logistics service. These SCM services have become more popular in the past ten years because the online retail business has grown. During the pandemic, point-to-point delivery models like Door Dash, Instacart, and Amazon Flex have been very important. The home delivery research not only found that these services are important to customer satisfaction with online shopping but also pointed out that customers look at things like delivery time and order status when judging delivery quality (Mentzer et al., 2001). All of these are things that supply chain managers should think about today. At the same time, it shows that there needs to be more talk about an important SCM pillar: the visibility of information (Srivastava et al., 1999; Teece, 2007). In the early stages of the pandemic, product shortages caused many people to ask questions like, "How long until the next shipment?" And "Will there be more products?" Consumers usually don't get this kind of information about the beginning of the supply chain. Still, studies have shown that the status of retail inventory (e.g., "an insufficient inventory") can affect how and why people buy things (Peinkofer et al., 2016). Therefore, the company must exercise judgement and make timely investments to use technologies like blockchain and transportation tracking platforms to understand the upstream inventory replenishment delivery window and distribution, how to use these technologies responsibly and effectively, and which technologies are best for enterprise supply chain operations (Teece, 2007). These have also become issues that should be considered in a successful supply chain. Only by fully integrating dynamic capabilities into the supply chain can enterprises maintain a leading position in the competition. The next sections look at how to build dynamic capabilities into how supply chains work so that companies can become more competitive and stay that way over time.

2.4.3. Three DC Approach: Supply Chain Dynamic Capability Theory Development

Successful supply chain management (SCM) entails a shift from controlling separate tasks to integrating activities into critical supply chain processes, such as transforming raw materials and components into finished products and sending these items to market via transportation (Lambert & Cooper, 2000). In the past, the upstream and downstream portions of the supply chain have interacted as isolated entities, receiving occasional information flows across time. Gradually, the purchasing department attempts to match this need by placing purchases when appropriate, marketing based on client demands, establishing relationships with various distributors and merchants and establishing communication with them. However, defining this demand in the current business climate is becoming difficult. Is the order for quantity or quality predominant? Traditionally, the need exists in the supply chain as a quantity. As information technology advances, it becomes easier to identify a legitimate demand for an amount. Therefore, this desire gradually shifts to one for quality. In the ferocious market competition, supply

chain innovation is also becoming increasingly important, primarily shown in how leading businesses recruit new suppliers and complements that can collaborate and develop.

According to Yang et al. (2020), supply chain learning is classified into four types: process orientation, structure orientation, consequence orientation, and other informal definitions. While supply chain learning is not included in this research, critical capabilities of supply chain learning have been incorporated into Supply Chain Dynamic Capability (SCDC). For instance, the process view of dynamic capability refers to the development process of new knowledge that has the potential to alter a firm's behavior. Similarly, consequence orientation focuses on the ultimate objectives of SCDC, such as improving performance and enhancing competitive advantage.

Operating an integrated supply chain necessitates a constant flow of information, which aids in developing the optimal product flow (Lambert & Cooper, 2000). However, sustaining the continuous production of the best product flow depends on extracting vital information from this vast amount of data and using it to construct the best product flow. The consumer remains the process's primary focus. To realise a good customer-centric system, it is vital to process information quickly and properly so the system can respond quickly. The configuration of these systems must be modified periodically in response to fluctuations in consumer demand and the system setup. Figure 2-5 show the process of developing dynamic capabilities from an inside routine of the organisation to a supply chain managerial routine. Table 2-11 explain why some capability was excluded or merged into other capacities in this process.

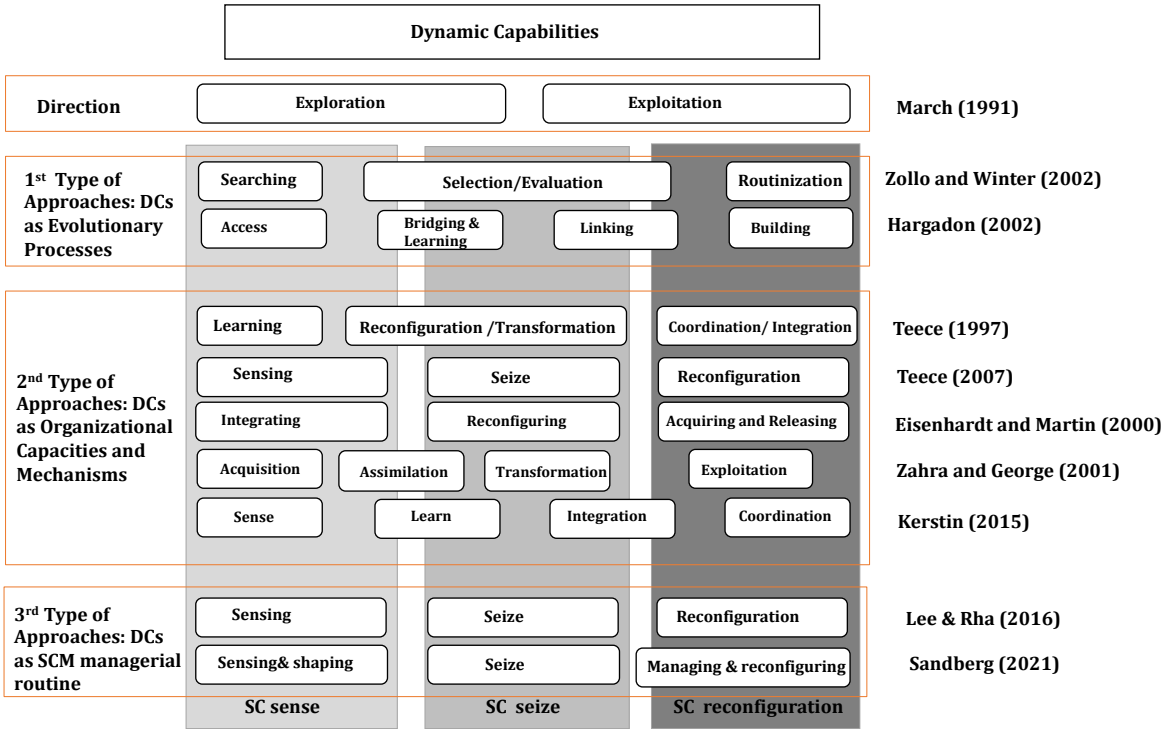

Fig.2- 5 Three type of approaches

Source: Author

Table 2-12. Exclude Reason of dynamic capabilities

Measurements	Exclude Reason	Reference
Learning	It is defined as the ability to acquire, absorb, transform and utilize knowledge; it is included in Sening's understanding of new information and Seizing's innovation in establishing the boundaries of the enterprise and internal and external.	Yang et al. (2020); Pavlou & El Sawy (2011); Zahra & George (2002);
Integrating	It is defined as the ability to embed new knowledge into new operational capabilities through the establishment of a common understanding and collective awareness; this can actually be simply summarized as a part of reconfiguration based on sensing.	Pavlou & El Sawy (2011); Eisenhardt & Martin (2000)
Coordinating	It is defined as the ability to orchestrate and deploy tasks, resources, and activities in new operational functions. This is actually the third point of governance and the fourth point of knowledge management in reconfiguration.	Pavlou & El Sawy (2011);

Source: Author

2.4.3.1. 1st type of approaches: DCs as evolutionary process.

The first technique views DC as a dynamic process, with enterprises making decisions and solving problems at various phases (Kurzhals, 2021). DCs are investigated and developed primarily in two ways. These two aspects can be observed in learning, analysing, mimicking, regenerating, and technological change (March, 1991), enhancing an organisation's performance and providing it with a competitive advantage. The key to their skill is not to get better at just one of these two things but to find a balance between exploring and improving in every practice. The essence of development is enhancing and expanding existing things, such as abilities, technology, and examples. The purpose of exploration is to test out novel approaches. In comparison to the investigation, its benefits are frequently unfavourable, challenging to attain, and unknown. It should also be emphasised that the interaction between costs, rewards, and ecology will alter the trade-off between exploration and development.

Zollo & Winter (2002) identified a method for balancing exploration and development while simultaneously managing two processes. According to this strategy, the relationship between discovery and development is cyclical and dynamic. This interaction involves four stages: mutation, selection, reproduction, and retention. This connection is demonstrated by the three mechanisms proposed by the authors: the tacit accumulation of prior experience, the expression of knowledge, and the compilation of knowledge. In their view, the evolution of the process of acquiring implicit expertise and the actions of articulating and codifying explicit information produces dynamic capacities.

To remain competitive in a world that is always changing, businesses must consider the trade-offs between exploration and development. Hargadon (2002) developed a process model of knowledge brokering to determine how to weigh the process of researching external conditions and establishing internal activities by discussing the connection between learning and innovative skills. They emphasise

the relationship between the basic responsibilities of organisational learning and innovation and how both rely on the social structure surrounding them, such as access, bridging, learning, linking, and building. He realised that for firms to remain competitive over time, they must continuously discover and explain how social dynamics operate. "What is crucial for innovation is not what the organisation already understands," they explained. It is how they use prior knowledge to comprehend new situations and new positions to comprehend prior knowledge (Hargadon, 2002, p80). In a second way, this procedure is referred to as the enterprise's permeability.

2.4.3.2. 2nd type of approaches: DCs as organisational capacities and mechanisms

The second way to consider dynamic capabilities is to view DC as an organisation's capability and mechanism. According to Teece et al. (1997), a company's dynamic capabilities are its ability to integrate, construct, and reconfigure internal and external capabilities in response to rapidly changing circumstances. In this definition, dynamic capability is a specific capability. Dynamic capabilities are no longer restricted to a process or an evolutionary method in the second method. Instead, this process or procedure is embedded inside the enterprise's operational mechanism and organisational capacities. In other words, the second approach represents the evolution of the first method over time. However, Exploration and development remain central to the discussion.

2.4.3.3. 3rd type of approaches: DCs as SCM managerial routine.

The supply chain is comprised of numerous firms' activities, with the core businesses at its centre. Consequently, dynamic skills can aid organisations and entrepreneurs in finding strategies to compete that are not detrimental to their long-term success. Supply chain management is a natural fit. The supply chain can also be viewed as discovering new market prospects, notably through new information, expertise, and data with varying access rights (Teece, 2007). Baumol (2006, p. 4) stated, "Schumpeter's entrepreneur's task is to knock everything out of balance, whereas Kirzner's mission is to restore balance. It is the driving force behind the industrial revolution and growth. If equilibrium is reached, it infrequently occurs (Shane, 2003). Currently, these forces play a significant role in the economy.

Likewise, a core company or supply chain management must always be "local" and "remote" in terms of technology and market monitoring, search, and investigation to identify and shape opportunities (Teece, 2007). This activity entails investing in potential upstream suppliers and determining downstream consumers' demands. Moreover, the supply chain as a whole is implicated conditions of operation, industry, and market, as well as prospective rival responses. Long-standing businesses typically have a method for resolving issues and determining the worth of the market, making this a significant problem. Expenses generally are a major aspect of the process. However, if they do not make the necessary adjustments, their great supply chain will not be able to assist them in meeting the new market's requirements. Over time, Nokia's flawless supply chain will not be able to withstand the hit the smartphone market deals them.

When major firms and supply chain managers first see prospects, they must be able to communicate new events and changes, create upstream suppliers to pursue, and share downstream markets. They must swiftly determine how the supply chain's technology will evolve, as well as how rivals, supply chain partners, and downstream markets will react. Even if they do, competitors may not calibrate the opportunity similarly. Their actions, as well as those of markets, supply partners, bodies that set standards, and governments, can alter the kind of opportunities and how competition grows.

There are other regulations governing how competitive forces can play a role. Regulatory bodies and entities that establish norms, laws, and social and commercial ethics impose these restrictions. Consequently, the "rules of the game" result from the interaction and evolution of the (business) ecosystem's participants. Entrepreneurs and managers must make accurate predictions because the future is unknowable. These estimates are transformed into plausible hypotheses that can be modified when fresh evidence is accumulated. Once a new evolving route has been discovered, it must move swiftly.

This dissertation will focus primarily on Sense's capabilities. 1) to guide the process of internal research and development (R&D) and the selection of new technologies; 2) the process of using external science and technology development; 3) to access suppliers and support the innovation process; 4) the process of identifying target market segments, changing customer needs, and customer innovation.

2.4.4. Link Dynamic Capabilities View with Supply Chain Management Strategies

This section provides SCM measures pertinent to the three dynamic characters (Table 2-12). These are derived through a review of DCs literature (Stage 1), SC-DC literature (Stage 2), and pertinent SCM material outside of the direct context of DCs (Stage 3). In addition, the analysis contains literature confirming the relevance of the tactics.

2.4.4.1. Sense and supply chain management

As discussed, links between sense capability and SCM surround advanced approaches to analysis system and consequently the learning and discovery, filtering, shaping and regeneration capabilities. Concerning strategies, some researchers discuss the importance of review product development work and the importance of establishing effective procedures to take advantage of the development of external science and technology (Pavlou & El Sawy, 2011; Kerstin, 2021; Lee & Rha, 2016). SCM literature suggests the connection of physical and managerial component are particularly important in driving advanced supply chain development (Lambert et.al, 1998). The organisation have an appropriate process to identify and respond to market or industry trends (Kerstin, 2021; Lee & Rha, 2016; Li & Liu 2014; Seifert, 2015), with clear links with monitoring the activities of competitors (Kerstin, 2021; Seifert, 2015; Lee & Rha, 2016; Li &d Liu, 2014). In a dynamic environment setting,

identify and respond to the industry trends maximise operation performance, reduce risk and boost competitiveness (Hong et al, 2018; Isnaini, 2020; Sessu et. al, 2020). Regularly reviewing changes in the business environment is also linked with sense capabilities (Pavlou & El Sawy, 2011; Lee & Rha, 2016). By embedding the interpretation and creation process into the enterprise itself (Teece, 2007). Thus, regularly reviewing changes supports successful supply chain capabilities building in a dynamic environmental and competitive context.

2.4.4.2. Seize and supply chain management

DC and SCM parallels are most obvious in seize capability, where the shift towards external focused operations (Hart, 1995) necessitates a supply chain focus (Miemczyk et al., 2016). The goal is to maximize the correctness of the business model, while improving waste, cost, efficiency and quality throughout the operation process. Therefore, Seize is embodied in the organizational form and business model. For example, companies use excellent business models to identify valuable new information and knowledge and import them into the supply chain. In addition, it is also important to choose the boundaries of the enterprise. This will affect whether companies can establish and maintain upstream relationships with cooperative innovation. Both can reduce the impact of negative information in the entire supply chain (Perotti et al., 2012), and promote efficiency, risk reduction, and competitiveness (Jumadi & Zailani, 2010). The business model prioritizes long-term benefits throughout the design process, which corresponds to the initial conceptualization of supply chain management. In addition to the benefits of efficiency and cost reduction, this also reduces operational and technical risks (Dangelico et al., 2017).

Resource investment and technology research is central in both seize (Teece,2007) and SCM (Lambert et al., 1998). The innovation of supply chain is particularly important (Teece,2007), promoting the direct involvement of an organisation with its suppliers and customers in planning jointly for product management and development (Kerstin, 2021). In line with seize capabilities, this supports knowledge and capacity building of sustainable practices (Bhupendra & Sangle, 2017) to support dynamic environmental operations (Dangelico et al., 2017). Effective communication procedures extend the resource investment and technology research and is also linked with seize (Hart & Milstein, 1999; Matopoulos et al., 2014). Surrounding the corporate values and culture, it emphasizes the value of leadership and effective communication in handling challenging decisions. Accordingly, quickly and right resolves conflicts in the strategic decision-making process drives successful supply chain capabilities building.

2.4.4.3. Reconfiguration and supply chain management

Links between reconfiguration and SCM are less prominent than those of sense and seize but can be identified. Some insights derive from review of clean technologies predicating “sustainable development” resource. For example, sustainable development is linked with corporate social

responsibility (Mencug & Ozanne, 2005; Markley & Davis, 2007). Some insights come from an examination of the concept that foreshadows "decentralization and near-decomposability". For example, collaborators and managers have the right to directly make changes to the product (Lee & Rha, 2016; Li & Liu, 2014). Considering that the restructuring of the enterprise system and the restructuring of resources have the same goals, the ability of enterprise restructuring is particularly Important, support active restructuring actions. On the other hand, in terms of physical resources (Lambert et al., 1998), the integration of resources to form novel resources is an important way to create competitive advantages through enterprise restructuring (Tecce, 2007; Lee & Rha, 2016; Kerstin 2021; Sandberg, 2021). Efficient resource utilization is the most common strategy in supply chain management (Defee & Fugate, 2010).

Another common but easily overlooked strategy is eliminating suppliers that do not meet the company's development goals. At the same time, there are mechanisms to develop new suppliers that conform to the corporate culture. This can maintain the company's development trend at a high level and reduce some unnecessary risks. Consistent with developing suppliers, corporate knowledge management also plays an important role in restructuring capabilities. New knowledge about logistics and the latest raw materials must be acquired through frequent exchanges between companies and partners. While knowledge management is already linked with reconfiguration, some overlap can be expected due to the interrelated nature of resources (Hart, 1997). Thus, reducing the redundancy of resources to ensure effective reconfiguration capabilities is conducive to establishing excellent supply chain capabilities.

2.4.5. Extraction, Conceptual Development and Corroboration of Capabilities

Using qualitative content analysis, 70 capabilities are identified while identifying SC-DC parallels and analysing the literature. Twelve of these are from notable DC books (Stage 1). The majority of these have to do with micro-foundations and the nature of dynamic capacities, and they lack proof and convincing explanations. Additional 58 are derived from a review of parallels between SC and DC (Stage 2) and non-DC-related SCM techniques (Stage 3). These could benefit from additional proof and explanation, but they do not group DC's resources. After innovation became a prominent issue in SC-DCs literature, the final twelve capabilities were derived from a review of innovation literature.

Each of the 112 capabilities is associated with utilising a DC's resource or the SCM approach that accompanies it. This lengthy list of capabilities is transformed into frameworks of dynamic capabilities that are simpler to comprehend by conceptual development. First, reduction and refining eliminate 26 capabilities or duplicates of other abilities. For instance, identifying opportunities, feeling the significant potential opportunities and threats and having good observation and judgment abilities. Second, since this study is only about dynamic capabilities, it doesn't look at capabilities that don't help with sensing, seizing, or transforming. It means that 32 more options have been taken away. For example, firm size is often mentioned in the literature as a way to get resources and improve

competitiveness, but it can't be called a dynamic capability. It leaves an easier-to-understand list of 12 skills. Then, these dynamic capabilities are put into groups based on what they do and what their internal and external roles are. In conclusion, Tables 2-12 and 2-13 show that this study has four supply chain sense capabilities, four supply chain seize capabilities and four supply chain reconfiguration capabilities.

The latest research supports these last skills. Five critical papers from 2017 to 2020 can be used to pull out 12 skills. Again, many of the words for these skills are the same or very similar. Also, many people don't think about a resource's changing abilities or put it in a category. But they and the conceptual frameworks agree on a lot of things.

Table 2-13. Measurement of Supply Chain Dynamic Capabilities

Supply Chain Dynamic Capabilities Characteristics(12)	**References**							
	This research	de Moura & Saroli (2020)	Kumar, (2018)	Lee & Rha, 2016	Seifert, 2015	Li & Liu, 2014	Beske et al., 2014	Beske, 2012
Supply Chain Sensing	√							
SEN1: Guide the process of internal R&D and selection of new technologies	√	√	√	√	√	√	√	√
SEN2: The process of using exogenous science and technology development	√	√		√				
SEN3: Discover the innovation process of suppliers and complements	√			√	√		√	√
SEN4: Identify target market segments	√	√	√	√	√	√		
Supply Chain Seizing	√							
SEI1: Depicts customer solutions and business models	√	√		√		√		
SEI2:Chooses corporate boundaries to manage supplements and "control" platforms	√							
SEI3: Selection decision protocol	√				√		√	√
SEI4: Build loyalty and commitment	√			√	√	√		
Supply Chain Reconfiguration	√							
REC1: Decentralization and nearly decomposable	√	√			√			
REC2: Cooperation Specialization	√	√	√	√	√	√		
REC3: Governance	√	√					√	√
REC4: Knowledge Management	√			√			√	√

Table 2-14. Include Reason of three supply chain dynamic capabilities

Measurements	Include Reason	Question Design & Code
Supply Chain Sensing	1) Most emerging trajectories are difficult to discern. Perceiving (and shaping) new opportunities is largely a scanning, creating, learning, and explanatory activity. Investment in research and related activities is usually a necessary complement to that activity. 2) Cutting-edge knowledge is essential to the strategy and performance of technology-based companies; secondly, corporate resources are limited and need to be used rationally	
Guide the process of internal research and development (R&D) and selection of new technologies.	1) Individual-The ability to recognize opportunities depends in part on the individual's abilities and existing knowledge- 2) Enterprise-It is more preferable to embed the scanning, interpretation and creation process into the enterprise itself. If the enterprise does not participate in such activities, they will not be able to evaluate market and technological development and discover opportunities. As a result, they may miss opportunities that others see. 3) Corporate management-more decentralized organizations with local autonomy are less likely to be deceived by the market and technological development. 4) Decentralization is conducive to the development of technology, and at the same time, external science is also the case.	SC Sen1 We will regularly review the possible impact of changes in the business environment on customers.
The process of using exogenous science and technology development.	1) A large part of the introduction of new products comes from external sources 2) Customers are sometimes the first to realize the potential of applying new technologies 3) Continuous and rapid design around new technologies/components developed elsewhere can itself provide a lasting competitive advantage. The success of downstream competition can be derived from the company's ability to continuously utilize such (external) innovations before the competition	SC Sen2 We regularly review our project development work to ensure that they meet the needs of our customers. SC Sen3 We have exchanged documents with our SC partners that contain valuable knowledge, which helps to improve SC's performance
Discover the innovation process of suppliers and complements.	1) Companies can search for new possibilities and participate in development activities. If successful, this development will affect the relative fate of the enterprise. This in turn determines the market structure	SC Sen4 We have an effective process to continuously explore new suppliers and complementors who can cooperate and innovate (eg. suppliers who can develop clean materials, and property management that emphasizes environmental governance)
Identify target market segments	Changing customer needs and customer innovation process.	SC Sen5 We have an appropriate process to identify and respond to market or industry trends (including competitors' activities)
Supply Chain Seizing	1) When new opportunities are discovered, they can be solved through new products, processes or services. But these require a lot of investment in advance, and how to determine these investments is closely related to the enterprise model and enterprise boundaries. 2) The product development process enables managers to combine their various skills and functional backgrounds to create income-generating products and clothing (Eisenhardt & Martin, 2000)	
Depicts customer solutions and business models	1) The business model is a way to entice customers to pay for value and turn those payments into profit. 2) Enterprises must have the ability to create, adjust, adjust and replace business models, which is the foundation of dynamic capabilities.	SC Sei1 We have effective routines (organizational forms and business models adjusted in time) to identify new information and knowledge of value and import them into new projects.

Measurements	Include Reason	Question Design & Code
Chooses corporate boundaries to manage supplements and "control" platforms	Indicate how the boundaries of the enterprise should be set to ensure that the innovation is more likely to benefit the initiator of the innovation. Rather than imitators and simulators. The ability of an enterprise to acquire technology from the outside and develop it internally is a key skill	SC Sei2 We can successfully establish and maintain upstream and downstream relationships with cooperative innovation.
Selection decision protocol	The advantages brought by economies of scale are not significant, and high-tech products usually appear in the form of "systems"	SC Sei3 We have effective routines to guide the direction of enterprise resource investment and technology research and development. Interview: How to deal with conflicts in decision-making
Build loyalty and commitment	Teece, 2007: Wrong decisions are very destructive and difficult to recover, especially those involving major investments	1) We have an appropriate process to release outdated resources to update our resource base. 2) We can quickly deal with conflicts in the strategic decision-making process. 3) We can quickly remedy unsatisfied customers. 4) Quality control process and audit;
Supply Chain Reconfiguration	1) To minimize internal conflicts and ensure sustainable competition, continuous readjustment and redeployment are required (Teece, 2007) 2) to adapt to changing market opportunities"	
Decentralization and nearly decomposable	1) In a highly fragmented situation, companies are unlikely to continuously respond to customers and new technologies 2) The basic principle of reconfiguration is to achieve greater responsibility for management decisions, so that the awareness of opportunities and threats can be carried out more thoroughly and quickly	SC Rec1 Our departments all have the right to directly make and implement department-related decisions.
Cooperation Specialization	The reason is that the benefits of economies of scale are now less, and new products are usually presented in a "systematic" way, so cooperation and specialization are very important	SC Rec2 We can effectively integrate and combine existing resources into novel combinations in SC to better match new market needs or temporary engineering needs
Governance	Without proper accountability/oversight, abuse of discretion and use of company assets for private purposes may occur	SC Rec3 We have a mechanism to eliminate suppliers that do not meet the corporate development goals and develop new suppliers that meet the corporate plan.
Knowledge Management	The ability to organize internal knowledge to manage patents-because the competition of intangible assets is very important and involves long-term interests) (What is important is the combination of know-how within the company and between the company and external organizations (for example, other companies, universities)	SC Rec4 We often interact with other departments to acquire new knowledge related to engineering development, process innovation or logistics and the latest raw materials

2.4.6. Conceptual Frameworks of Supply Chain Dynamic Capability Theory

This section presents the final frameworks of supply chain dynamic capabilities (Figure 2-6, 2-7, and 2-8). These three figures will define capabilities form dynamic capabilities activities (Micro and macro) to execute the internal and external resources in SCM. This supports the competitive leveraging of sustainable supply chain strategies. An introduction of the final capabilities and their corroboration is offered below. Meanwhile, based on the relationship between the above three dynamic capabilities and the supply chain, Table 2-13 summarizes the reasons for using the three-supply chain dynamic capabilities and the theoretical basis for the design of the questionnaire is indicated as well.

Nevertheless, the application of dynamic capabilities to complex supply chains is not an easy task. In order to ensure that each dynamic capability in the supply chain can be explained appropriately and accurately, each dynamic capability should correspond to the correct supply chain process. It is necessary to provide a background for the multi-level analysis in strategic research and its relevance in this context. Jarzabkowski & Spee (2009) illustrate the different levels and units of research analysis. Research and analysis are divided into three levels: macro, meso and micro. However, this is a single-dimensional analysis. In this study, these three levels will be integrated into the internal and external resources of the supply chain, and the meso level information will be integrated into the micro and macro dimensions, and the supply chain internal and external dimensions.

Inter-micro explained the original micro-level, which refers to exploring strategic issues at the level of individual actors within the organization. This type of research may attempt to explain some specific phenomena that are closest to the participants who constructed it and may therefore be regarded as part of its micro-interaction (for example, Samra-Fredericks, 2003). The matching unit of analysis is the individual actors in the organization, which analyzes and investigates individual practitioners. For example, Rouleau (2005) studies how individual behavior affects organizational strategy.

Inter-marc explains part of the meso-level research that explores strategic issues at the organizational or sub-organization level, such as functions and units. Research at this level can investigate strategic processes or strategic action patterns (e.g., Balogun & Johnson, 2005). The analysis unit is the aggregation of participants in the organization. It analyzes the practitioners who are the aggregation participants, such as the senior management team, middle management, or functional departments, such as engineering or business development departments. For example, Molly & Whittington (2005) studied strategic decision-making within the group while drawing on the group's previous experience in similar situations.

Exter-micro explains part of the meso-level and part of the macro-level. It aims to develop specific partners based on the company's own strategic resources. This cooperation is usually interpreted as complements. In addition, the analysis unit of this dimension is consistent with inter-marc.

Exter-marco explained that the original macro-level refers to research exploring strategic issues at the institutional level, usually explaining activities and action patterns in specific industries and business environments (Lounsbury & Crumley, 2007). The business environment refers to the external influences that affect the company's decision-making and performance, including market competition within the industry (Grant & Jordon, 2013). Environmental impacts can be political, economic, social, and technological factors and the actions of governments, regulatory agencies, suppliers, competitors, and customers that affect the industry. The matching analysis unit is the participants outside the organization, which mainly analyzes the actions of the investigation agency, such as the government and regulatory agencies, industries or departments, and the relationship with the organization. For example, Whittington et al. (2006) show that regulatory and government pressures affect the organisation's strategy seminar discussions.

2.4.6.1. Supply Chain Sensing (SC Sen)

The four capabilities in Figure 2-6 seek to help the supply chain build sustainable competitiveness. Perceived Mac-external aims to build an understanding of the market and industry, which not only requires an understanding of the company's own resources, but also requires familiarity with partners in the supply chain. The perceived Mic-external emphasizes the importance of complements. In the era of rapid technological development, if this kind of exploration and development succeeds, it will affect the relative fate of the enterprise, which in turn determines the market structure (Teece, 2007). Such activities will be more effective with the support of middle and senior managers. Mic-internal means that if middle and senior managers can integrate the correct cognition into the business process of the enterprise through a series of exploratory activities, it will increase the success rate of exploratory activities (Pavlou & El Sawy, 2011). Sometimes, customers will be the first to realize the potential of applying new technologies, so the ability to respond to upstream innovations in a timely manner is also a manifestation of competitiveness.

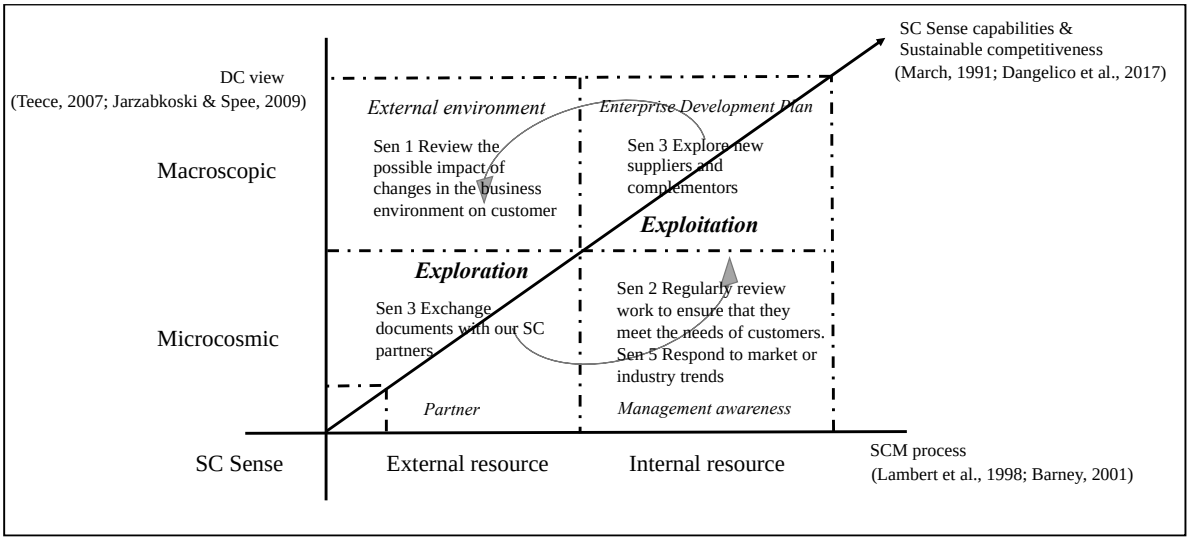

Fig.2- 6 Activities in supply chain sense (SC Sen) cycle

Source: Author

Thus, this research hypothesis that:

H_{4a}: Supply Chain Sensing (SC Sen) positively reflect Supply Chain Dynamic capability.

2.4.6.2. Supply Chain Seizing (SC Sei)

The capture capabilities of the four supply chains in Figure 2-7 are designed to help supply chain decision-makers make ideal decisions and or sustainable competitiveness. This supports the creation of fully sustainable products that take into account resources inside and outside the supply chain and differentiated advantages. The design and performance specifications of the product and the business model used help define the way companies provide value to customers, induce customers to pay for value and convert these payments into profits (Tecce, 2007). Therefore, the ability of Mac-internal aims to determine the correct business model of the enterprise to help the enterprise identify valuable knowledge in the supply chain. As this research all know, the advantages brought by economies of scale are not significant now, and high-tech products replaced by them usually appear in a "systematic" way. The core of this "system" is the resource investment and technological research and development in the supply chain. However, resources are limited, and not all research and development can improve the competitiveness of products, which requires a distinction between long-term and short-term benefits. Therefore, in the context of rapid technological development, it is very important to correctly set corporate boundaries. Mic-external shows how to set up corporate boundaries to ensure that innovation is more likely to benefit the initiator of the innovation. Rather than imitators and simulators. This requires companies to specifically acquire technology from the outside and the ability to develop technology internally. This ability can be reflected in the successful establishment and maintenance of upstream relationships for cooperative innovation. In order to ease the difficulty of implementing such decisions, an effective communication procedure is needed. Therefore, Mic-internal aims to establish effective communication procedures to alleviate conflicts in supply chain decision-making.

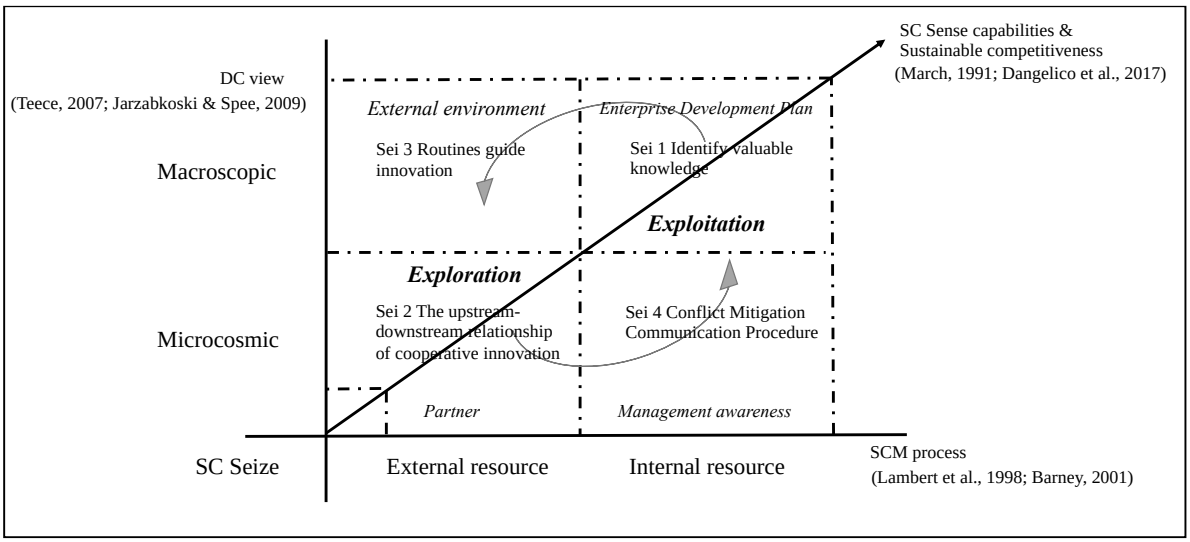

Fig.2- 7 Activities in supply chain seize (SC Sei) cycle.

Source: Author

Thus, this research hypothesis that:

H_{4b}: Supply Chain Seizing (SC Sei) positively reflect Supply Chain Dynamic capability.

2.4.6.3. Supply chain reconfiguration (SC Rec)

The four supply chain restructuring capabilities in Figure 2-8 are designed to help the supply chain optimize resources to improve sustainable competitiveness. With the determination of the external environment and the continuous changes of internal resources, Mac-external, which needs reconfiguration capabilities, is effectively integrating and combining existing resources in the supply chain to match the thin market. Not only to keep up with the benefits of technological development and cooperation, without proper accountability/supervision, abuse of discretion and use of company assets for private purposes may also occur (Teece, 2007). Therefore, for key enterprises, it is particularly important to regularly eliminate suppliers that do not meet the corporate development goals and have a mechanism to develop new suppliers that meet the corporate culture. But this is not enough to satisfy the execution process of supply chain reconfiguration capabilities, because in the highly decentralized situation, companies are unlikely to continue to respond to customers and new technologies. In addition, the basic principle of refactoring is to achieve greater responsibility for management decisions, to achieve a more thorough and faster perception of opportunities and threats. Therefore, key enterprises need to continuously reconstruct the definition in Mic-internal according to the environment in the supply chain. Specifically, it requires partners and managers to have the right to directly make changes to products when they meet normal needs. The purpose of this exploration and development is to apply the results to the development of the enterprise. Therefore, the organization's internal knowledge and ability to manage patents cannot be ignored, because the competition of intangible assets is very important and involves long-term benefits.

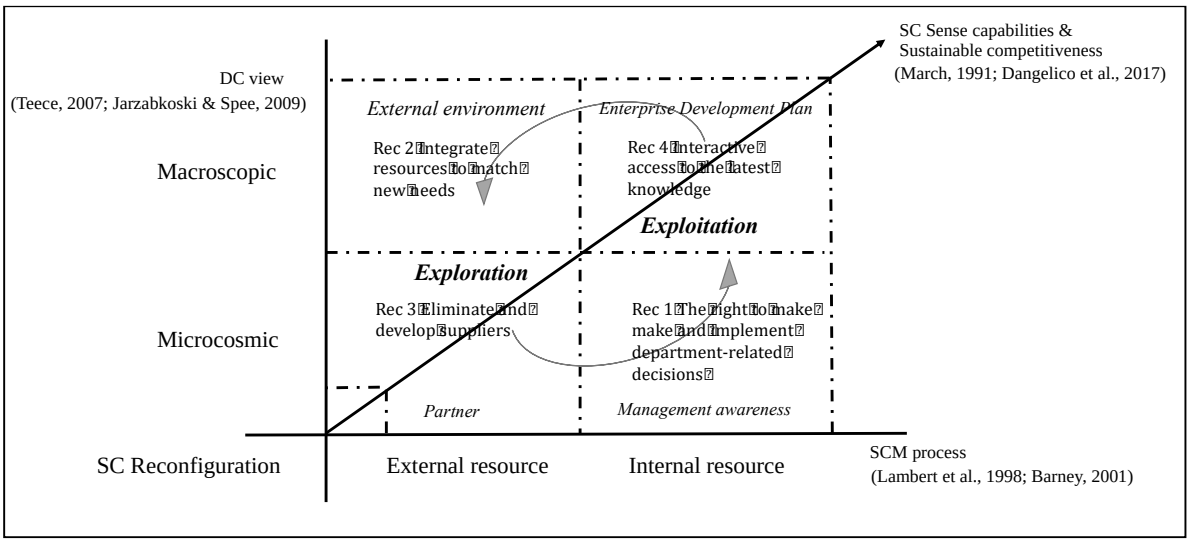

Fig.2- 8 Activities in supply chain reconfiguration (SC Rec) cycle

Source: Author

Thus, this research hypothesis that:

H_{4c}: Supply chain reconfiguration (SC Rec) positively reflect Supply Chain Dynamic capability.

2.4.7 Through SCDC

Previous studies have delved into the arena of supply chain sustainability, predominantly through the lens of dynamic capabilities (DC). Beske et al. (2014) laid the conceptual groundwork, and subsequent works by Siems et al. (2021) furthered this exploration with a systematic literature review. This latter study specifically highlighted the DC-driven sustainability practices within the food and automotive sectors, revealing comparative insights into the evolution of practices in these industries.

While these contributions are noteworthy, an integral aspect of the discourse seems underexplored: the micro-foundations of capabilities related to supply chain resilience (SCR). There has been a particular interest in supply chain capabilities and how they drive sustainability. For instance, Silvestre et al. (2020) introduced the idea that exploration and exploitation capabilities are steered by specific routines to execute sustainable development initiatives. Pereira et al. (2021) accentuated the essential role of learning capacity, especially in dynamic settings like the COVID-19 pandemic. Yet, these studies largely overlook the broader supply chain context, encompassing both upstream and downstream elements, as pointed out by Yang et al. (2020) and Silva et al. (2023).

A significant research gap looms: the detailed elucidation of supply chain sustainability performance and the micro-foundations of SCR-related capabilities. Some scholarly works suggest that sustainable development can precede resilience. Conversely, the majority propound the idea that resilience bolsters sustainable development within supply chains. However, only a handful, with Silva et al. (2023) being

a prime example, have ventured to decipher the intricate relationship between resilience and sustainability, particularly in the context of dynamic capabilities in the supply chain.

2.5 Research Gap, Path Hypothesis and Framework

Following the detailed discussion in the previous section, this section will conclude with research gaps from the present main trends. To fill identified gaps, this section will also make the corresponding hypotheses to guide follow-up research. The research model of this study will be constructed through the existing hypotheses in this section as well.

2.5.1 Research Gap Summary

Based on the above discussion, this section sets out where the gaps that this study will focus on filling lie within the current trends. This will clarify the implications of this research and how future research should build on this research.

Section 2.1.3.1 indicate three thematic trends indicated 1) Insufficient attention to the social dimension. (2) Insufficient attention to the environment. 3) Lack of quantitative research. These trends are the main driving force for this study, which means that the development of a resilience-based sustainable supply chain is imperfect. Still, a supply chain with both effectiveness and efficiency is very attractive, and it is also a challenge that has to be faced in the process of supply chain development. Given this challenge, Can the effectiveness and efficiency be satisfied in the same supply chain? It leads to this study's main research question: What is the relationship between resilience and sustainability (Gap2)? To answer this question in detail, another essential goal of this study is to explore what a sustainable supply chain and resilient supply chain is. The definition and practice of resilience and sustainability are discussed in detail in Sections 2.2 and 2.3, which provides a foundation to explore the relationship gap between resilience and sustainability in Section 2.3.4.

Section 2.1.3.2 guides this research on how to think about the relationship between sustainability and resilience through the review of application methods. It summarizes the current focus on theoretical strengthening, simulation modelling and application of conclusions. Based on the views of some scholars, a large number of analyzes between resilience and sustainability focus on the engineering field rather than from a management perspective. At the same time, there is a lack of thinking about how the analysis results are applied to the current supply chain development from a management perspective. This research explores the relationship between resilience and sustainability from a management perspective, but how to explore it from a management perspective? Which management theories are appropriate? Through the discussion in 2.3.4, which is between the characteristics of resilience and the theory that has been used to develop sustainable supply chains, this study matches the dynamic capability theory as the theoretical basis of this study (Gap1). Through a review of relevant literature, Table 2-14 lists the existing relationships among resilience, dynamic capacity, and sustainability, as

well as the areas that this research will focus on. In addition, Table 2-14 also indicates that there is a gap between SCR and SCDC. Therefore, another important task of this study is to combine the current literature with exploring the potential relationship between SCR and SCDC and promoting the development of conjecture through qualitative research. Similarly, before this, to rigorously explore the relationship between resilience and sustainability through dynamic capabilities, a theoretical exploration is considered necessary and attractive. Can dynamic capabilities be transferred from enterprise applications to supply chain applications? This question drives this research to explore the development process of dynamic capabilities and their relationship with the supply chain.

In addition, Section 2.1.3.3 discusses a difference in resilience between academics and practice, which lead this research to understand how managers understand supply chain resilience. It drives quantitative research methods, especially invariance analysis, to verify that all stakeholders have the same knowledge of the practice. The result will provide a theoretical and practical reference for a reasonable explanation of the relationship between resilience and sustainability for all stakeholders in the supply chain (Gap 3). Based on the discussion in Section 2.1.3.4, this research is interested in the construction industry because the sustainability of the construction industry is more severe than that of the tertiary sector, which involves not only green interests but also includes the social responsibility of stakeholders in the complex construction supply chain. The exploration of the tertiary sector in the future can be based on the results of this research. But this study only focuses on the construction supply chain in the Chinese context because it plays a vital role in construction sectors in the current world. It also needs to be noted that the different cultural gaps greatly influence the process and construction of multi-construction supply chains. Future research on sustainable construction supply chains under various cultural differences is equally important, and this research also can provide support.

Table 2-15. Theme Relationship of Managerial View

		Dependent variable			
		SCR	**SSCM**	**SCDC**	**SSCMP**
Independent variable	**SCR**	/	OT, Ivanov, 2020 OT, Moktadir et. al, 2021 OT, Levesque, 2012 OT, Fahimnia & Jabbarzadeh, 2016 **ME(SCDC), This research**	**ME(SCDC), This research**	OT, Eltantawy, 2016; OT, Sabahi & Parast, 2020 Me (OV), Chowdhury & Quaddus, 2017; MO (Org culture), Altay et al, 2018;
	SSCM	OT, Ivanov, 2018 OT, Marchese et. al, 2018	/	ME(SCDC), Hong et al, 2018	OT, Esfahbodi et al, 2016,2017; ME(SCDC), Hong et al, 2018; MO(SCDC), Isnaini, 2020; MO(SCDC), Sessu et. al, 2020; **ME(SCDC), This research**
	SCDC	ME(SCDC), Eltantawy, 2016; ME(SCDC), Lee & Rha, 2016; MO(SCDC), Govindan et al., 2015; ME(OV), Chowdhury & Quaddus, 2017; ME(SCDC), Sabahi & Parast, 2020 MO(Risk), Brusset & Teller, 2017;	OT, Kumar et. al, 2018 OT, Seifert, 2015 OT, Buzzao & Rizzi, 2020 ME(SCDC), Brusset & Teller, 2017; ME(SCDC), Hong et al, 2018; **ME(SCDC), This research**	/	OT, Beske, 2012; OT, Beske et.al, 2014; ME(SCDC), Jiangtao et al, 2018
	SSCMP				/

Source: Author

Note – ME, mediator; MO, moderator; OT, others; SCR, supply chain resilience; SCDC, supply chain dynamic capabilities; SSCM, sustainable supply chain management; SSCMP, sustainable supply chain management performance.

2.5.2 Structural Path Hypothesis and Research Framework.

The main purpose of the structural pathway model is to test causality and lay the foundation for further exploration of the relationship between SCR and SSCM. This section of the research model consists of the three main subjects covered by the literature review, which look at the relationships among the four factors.

2.5.2.1 Supply Chain Resilience (SCR) and Sustainable Supply Chain Management (SSCM).

Existing research indicates that resilience positively affects the sustainability of supply systems. For example, Cohen et al. (2022) argue that when disruptive risks occur, firms can impress the public more with prompt action and favourable outcomes. Since supply chain resilience is a relatively new concept, only a small amount of study has been conducted on its relevance to sustainable supply networks. For example, Ivanov (2018, p3508) claims a "resilient supply chain structure in mitigating knock-on effects and improving sustainability". The rationale for the coexistence of resilience and sustainability has been explained by research in engineering structures, which has deepened the interest of management scientists in resilience and continuous supply chain management. Negri et al., 2021 A literature review found that they are in significant conflict, as sustainability typically focuses on efficiency, while resilience seeks effectiveness. However, Kortmann et al., 2014 demonstrate through quantitative evidence from managers in India and the United States that strategic flexibility improves operational efficiency through mass customisation capabilities. Furthermore, Adobor & McMullen (2018) argue that supply chain resilience enables companies to improve sustainable management, thereby improving their performance in the industry. Specifically, Sauer et al. (2022) confirmed that, economically, through five out of ten cases, they demonstrated a clear efficiency-oriented resilient approach to pandemic action. Different cases have demonstrated that the resilience of SCs also mitigates the impact of potential crises on the reduction of CO2 emissions; in society, resilience-related actions aim to support suppliers in ensuring their sustainability and employment and to promote transparency; these challenges are primarily attributable to insufficient order volumes and risk offsetting by supplier employees. It means resilient practices can lead to better socially relevant sustainable management as well. Therefore, the research hypothesis:

H_5: SCR is positively associated with SSCM.

2.5.2.2 Supply Chain Resilience (SCR) and Supply Chain Dynamic Capabilities (SCDC).

Although there is some study evaluating SCR approach in light of the dynamic capability theory, more is needed (Eltantawy, 2016a; Chowdhury & Quaddus, 2017). Because SCDC is influenced by both internal and external surroundings (Eriksson, 2014; Eriksson et al., 2022), it cannot be utilised as a starting point to improve sustainability. Instead, sustainable development resilience strategies can be

leveraged as internal drivers for SCDC development. There are two causes for it. In the focus group, this research discovered that several great routes and leading laws of an organisation can subtly enhance dynamic capabilities (F14). Second, the initial conceptual framework makes it clear that DCs are believed to be composed of processes (Eltantawy, 2016b; Eriksson, 2014; Eriksson et al., 2022). Consequently, it can be viewed in two ways; empirical studies make it clear that the majority of dynamic capability assessments characterise the everyday operation process. As an example, one of the measuring criteria is "We routinely assess the possible impact of market and project environment changes on the supply chain" (Pavlou & El Sawy, 2011; Lee & Rha, 2016). Sensing is one of the reactive dynamic capacities in this process. In terms of operationalization, Eriksson (2014, p.74) has emphasised the significance of SCDC as a unique process: "defining a specific process within a company as a SCDC is easier than traversing many (sometimes imprecise) knowledges processes." In the meantime, Tondolo and Bitencourt (2014) present a theoretical justification for this outcome. According to them, "Dynamic Capabilities are produced by a series of processes that have an effect on organisational resources and capabilities." Thus, there is grounds to suppose that the process of organising operationalisation can be viewed as a precursor to SCDC (Eriksson, 2014). Consequently, the research hypothesis:

H_6: SCR is positively associated with SCDC.

2.5.2.3 Supply Chain Dynamic Capabilities (SCDC) and Sustainable Supply Chain Management (SSCM).

In China, the construction sector is one of the least productive. Material management approaches, for instance, should reflect a global awareness toward sustainable and ecologically friendly practises when coordinating resources, as the inefficient use and management of materials over their entire life cycle becomes increasingly important (Hasan et al. 2018). Meanwhile, construction logistics are becoming more complicated (Whitlock et al. 2021), and there is an unresolved information asymmetry between suppliers and contractors because current solutions don't consider the fact that material supplied according to a predefined schedule is consumed nonuniformly (Varnäs et al., 2009). As a result, unreliable and unpredictable material management in the supply chain is to blame for the aforementioned problems with cost and schedule overruns as well as quality failures. As a result, these issues must be taken into account in the design of a long-term supply chain for the construction sector.

Studies on dynamic capability that have been conducted so far provide a possible solution to the supply chain's inherent instability and vulnerability. Considering its demonstrable dynamic capabilities and positive impact on SSCM. According to Cheng et al. (2014), dynamic capability significantly improves a company's inventive abilities in a highly competitive market. Many more research focus on different aspects of this connection. According to Mentzer et al. (2001), a company's capacity to strategically cooperate with its suppliers along the supply chain can be a source of competitive advantage. Learning capability in the supply chain is found to have a significant effect on supply chain efficiency by Bessant

et al. (2003). Information sharing between supply chains can boost productivity and reduce risk, as shown by Dyer & Hatch's (2006) comparison of the supply chains of U.S. automotive manufacturers to Toyota's. Several authors, including Chen et al. (2007) and Green et al. (2007), have stressed the value of adaptable information flows in the supply chain. This flexibility, according to Lee & Rha (2016), is critical for reducing the impact of supply chain disruptions and increasing a company's long-term viability. Extensive research by Hong et al. (2018) shows that the dynamic capability of the supply chain significantly affects environmentally responsible business practises. Therefore, this study backs the trend in supply chain dynamic capabilities toward greater external and internal integration, which necessitates greater participation and cooperation from SC participants such as supplier integration, contractor integration, designer integration, and owner integration, to improve process flow efficiency and reduce fragility and uncertainty. Therefore, the research hypothesis:

H_7: SCDC is positively associated with SSCM.

2.5.2.4 Sustainable Supply Chain Management (SSCM) and Sustainable Supply Chain Management Performance (SSCMP).

The path analysis also shown that DC significantly contribute to SSCM improvement. The literature addresses this finding (Hong et al, 2018; Felsberger et al., 2022). The data supports both the DC and SSCM models (McDougall et.al, 2021). Elf et al. (2022) found that public buildings with dynamic capacities have the potential to produce a persistent competitive advantage, and this outcome supports that finding. Hong et al. (2018) state that increasing the supply chain's entire dynamic capability can improve the efficiency of environmental monitoring and the inventiveness and activity of significant firms. Protecting and reinforcing the client organization's role in supporting innovation in the construction sector is made possible through investing in the development of the dynamic capabilities of public clients (Manley, 2006). To conclude that SSCM is governed by its routines and processes, which have a significant impact on the supply chain's dynamic capability, Seifert (2015) analyse Nestle's "Zero Waste to Disposal" project. This finding is in line with a number of anecdotal reports from China, which claim that leading construction firms there have enhanced their SSCM procedures by means of nimbler organisational structures and processes. In order to stay ahead of the competition, China Coal Technology & Engineering Group has introduced the idea of intelligent supply chain construction. A viable, controlled, and tractable intelligent supply chain, as well as dynamic and sustainable supply chain management, can be established through the integration of existing resources and the use of information technology. Teece (2007, p.1332) believes that the importance of specialisation to enterprise strategy has increased while the value of scale and scope economies to enterprise boundary decisions may have decreased. Therefore, businesses all along the supply chain can work together to improve profitability and sustainability through the dynamic practise of resource integration. Since this is the case, it's not surprising that governments and building companies are increasingly interested in a resource integration solution. The results of the study's focus group have

also been confirmed "BIM is a carrier, a database. Various disciplines can coordinate through a platform to improve the efficiency of our work. For example, energy-saving, capital saving, investment, etc. (F18)". That's why adaptable abilities are so important for making sustainable building supply chain management a reality. Therefore, the research hypothesis:

H_8: SSCM is positively associated with SSCMP.

The above discussion provides a reasonable relationship between resilience, sustainability, and dynamic capability. Exploring the relationship helps answer the main research "RQ2: What are the impacts of dynamic capability on improving supply chain resilience in the sustainable construction supply chain? " Meanwhile, based on the review in the previous sections, which justified the definition and content in detail for each dimension. Therefore, referring to hypothesis, following Figure 2-9 will show the framework of this research to respond to the research gap

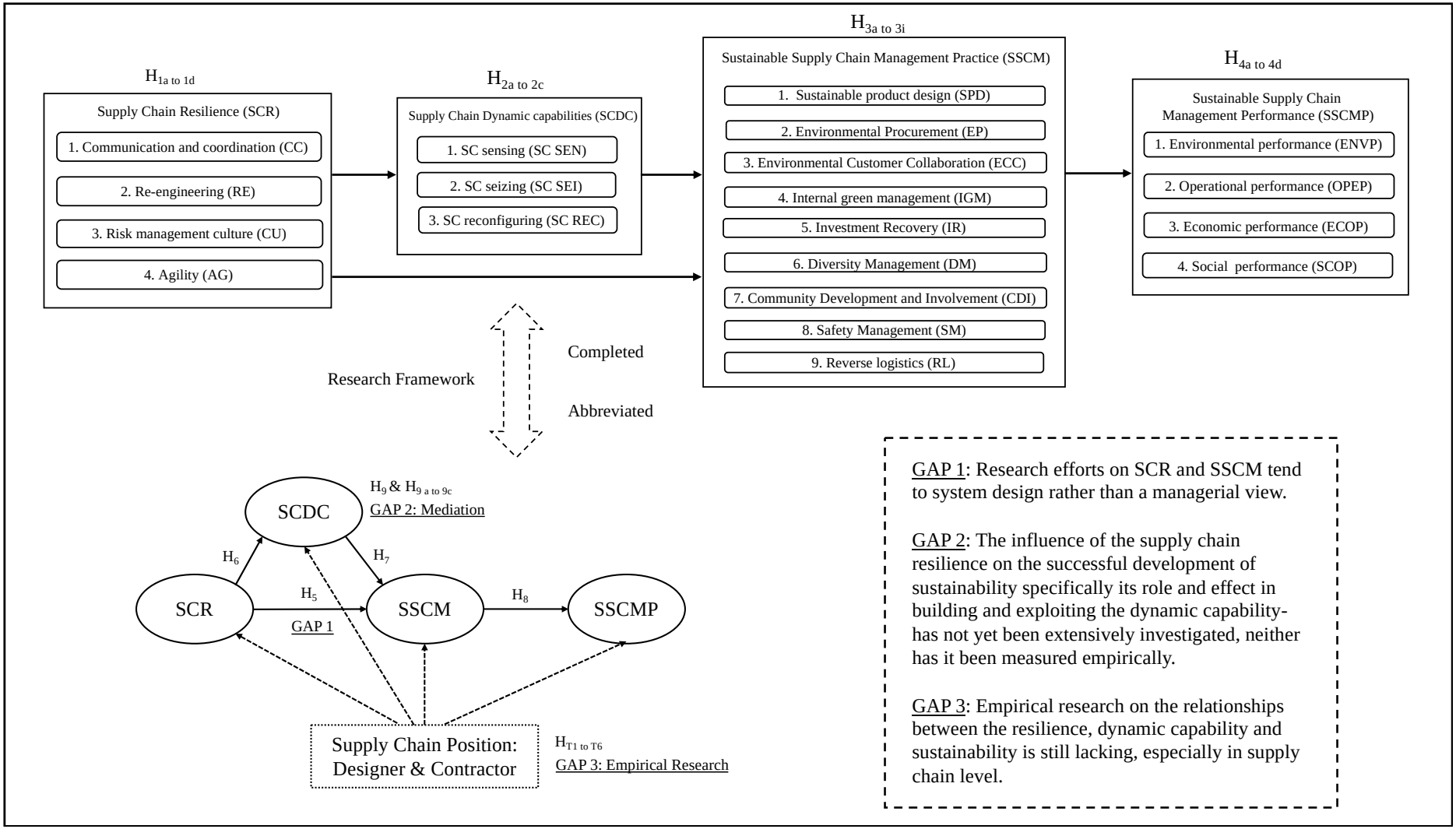

Fig.2- 9 Research Model with Gap

2.5.3 Mediation Hypothesis

Due to the tension between efficiency and efficacy (Negri et al., 2021), the effects of SCR practise on SSCM are not readily apparent. Jabbarzadeh et al. (2018) outline the relationship between SCR and SSCM from an engineering standpoint, however they lack empirical evidence demonstrating the relationship and its usefulness in management. Based on the preceding discussion, this study concludes that a sustainable resilience strategy can be used as an internal driver for SCDC development, and that the study of dynamic capabilities appears to offer potential for addressing the vulnerability and uncertainty of the construction supply chain This suggests that efficiency will lead to an increase in dynamic capacities, which will strengthen the practise of sustainable supply chain management. SCDC will consequently function as a catalyst to mediate the relationship between supply chain resilience and sustainability (if further information is required). Lin &Wu (2014) argue that dynamic capabilities can commonly mediate a company's resources or activities to boost performance. Some scholars have undertaken considerable research on the driving force of dynamic capabilities, and they believe that enhancing the operational process will increase the effectiveness of dynamic capabilities. These researchers hypothesise that dynamic skills have a positive impact on the sustainable development of businesses, hence boosting the performance of sustainable supply chain management in organisations. They demonstrated the influence of the connection between sustainable management and dynamic capacities. In light of the previously stated perspectives, the following study hypotheses are proposed:

H_9: SCDC mediates the relationship between SCR and SSCM.
H_{9a}: SC SEN mediate the relationship between SCR and SSCM.
H_{9b}: SC SEI mediate the relationship between SCR and SSCM.
H_{9c}: SC REC mediate the relationship between SCR and SSCM.

Since this is the first time the relationship between SCR and SSCM has been explored from a managerial point of view, it is not expected that every hypothesis will be supported. Conversely, the rejected hypothesis could provide important insights into the role of dynamic capabilities in the management of resilience and sustainability. A detailed discussion of mediation analysis includes simple and multi mediation will be given in post analysis of Section 4.3.

2.5.4 Invariance Hypothesis

While invariance analysis is commonly used in cross-cultural research, this study's supply chain demonstrates that different locations along the supply chain also have their unique cultural characteristics, particularly in the construction industry, where contractors tend to emphasize efficiency even though delays due to uncertainty are the most common issue with contractor work.

Their suppliers are functional manufacturing businesses, just like most supply chain providers. However, due to their close linkages to consulting and design, diverse initiatives must be modified to meet the requirements of each project. Enterprises in the construction supply chain have varying traits and cultures (the reason why this study uses invariance analysis). Therefore, the extent to which different respondents interpret survey items similarly is crucial in empirical research. A detailed discussion of invariant analysis will be given in the post-analysis of Section 4.3.

2.5.3.1 Invariance of unconstrained

Configurational invariance implies that every group has the same number of constituents. It is provided when the factor structure achieves appropriate model fit "when both groups are tested freely and simultaneously" (Gaskin, 2012). The estimation of the unconstrained multi-group model demonstrates just a modest decrease in the fit indices compared to the final measurement model. Configuration invariance implies that the underlying structure of the component is equally valid across all groups (Kline, 2015). All groups must have the same number of constructs and linked items in a CFA model. Additionally, the CFA results for each group must achieve an acceptable level of model fit, comparable to the CFA validation for the single-group situation. Using measurement theory, the purpose of this phase is to establish that the constructs are homologous across groups (Hair et al., 2018). Therefore, the research hypothesis is as follows:

H_{T1}: CON and ARC have invariance of unconstrained in research model.

2.5.3.2 Invariance of measurement weigh (Metric)

Because factor loadings reveal the causal effect of observed indicators on their latent concept, metric invariance requires that factor loadings be uniform across all groups (Bollen, 1989). As a result, metric invariance proves that values on manifest indicators are equally important to different communities (Vandenberg & Lance, 2000). Empirical comparisons of multiple CFA classes are made in this phase. In this step, the CFA model's factor loadings are also checked to make sure they're consistent. Satisfaction now provides conceptual parity of assessed meaning across communities (Hair al, 2018). Factor loadings for both groups were confirmed, however it nevertheless estimated loadings independently (Kline, 2015). The estimated 2 must be more than 0.05 at the 5% level of significance in order to conclude that the CFA models are comparable. Therefore, the hypothesis for the study is:

H_{T2}: CON and ARC have invariance of measurement weigh in research model.

2.5.3.3 Invariance of random measurement residuals

The portion of item variation that cannot be explained by the latent variable's variation is called the residual variance. Therefore, the test for equality of between-group residual variance determines if there is equivalent measurement error across scale items when gauging latent constructs. For example, if

some people in the sample are less familiar with the scale and its scoring forms than others, you may find that residual invariance breaks down (Mullen, 1995). Residual noninvariance may also be brought on by cultural differences in language, idioms, grammar, and syntax, as well as in the experiences people from different communities have had (Malpass, 1977). That the items in both sets are internally consistent is shown by the residual variance invariance. Alternatively, elements in both sets are of equivalent quality as indicators of the underlying construct (Cheung & Rensvold, 2002). Error variance invariance tests whether or not the error in the variance of a variable is uniform across the sample (Hair et al., 2018; Kline, 2015). Therefore, the hypothesis for the study is:

H_{T3}: CON and ARC have invariance of random measurement residuals in research model.

2.5.3.4 Invariance of structure covariance

To some extent, the covariance between different constructs is bounded by the structure covariance. The purpose of this was to test for associations between variables at the group level (Hair et al., 2018; Kline, 2015). Comparable to the importance of the measurement aspect is the importance of having a consistent structure across all groups. Potential in theory. Therefore, the hypothesis for the study is:

H_{T4}: CON and ARC have invariance of structure covariance in research model

2.5.3.5 Invariance of latent mean structure mean

According to the principle of the invariance of latent structure means, when comparing observed means across groups, all constant influences on the indicators are nullified. That's why it's essential for interpreting differences in means between groups. this research hypothesise that men and women have different perspectives on these issues because of gender differences in the willingness to acknowledge to specific managerial difficulties indicated in a questionnaire. This difference may have an additive effect on the observed means but not on the response variation. Culture, cohort effects, and disparities in data collection procedures are also potential causes of diverse additive response types. One example of procedural variance is when patients are weighed in their street clothes in one clinic and in examination gowns in another (Gregorich, 2006). This situation is plausible in the context of this study, for example, if one management is employed before a company experiences devastation and another is hired after the same company suffers a disaster. It's possible that managers brought in later will have less of an understanding of the company's capabilities due to this. Potential aspects like time, position, gender, etc., must be removed from estimates of the company's dynamic capacities to ensure accuracy. This inquiry, then, necessitates a test structure. The model used in the study shows that CON and ARC are structure-mean invariant.

H_{T5}: CON and ARC have invariance of structure mean in research model

2.5.3.6 Invariance of path coefficients

The primary goal of path coefficient invariance is to determine whether the model has the same effect on these two supply chain nodes. The path coefficient test is a continuation of the preceding class tests. This has two advantages. First, if the model is invariant, it has broad applicability in the construction supply chain and may be promoted and implemented broadly. Second, if there is non-invariance, the model will highlight areas of difference and provide managers and decision-makers with improvement guidance. Consequently, the research hypothesis is:

H_{T6}: CON and ARC have Invariance of path coefficients in research model

2.6 Chapter Summary

By situating supply chain resilience (SCR) and sustainable supply chain management (SSCM) within the broader strategic management field, sections 2.2 and section 2.3 introduced the fundamental concepts and definitions necessary to pursue this line of research. Section 2.4 aimed to lighten the nature of supply chain dynamic capabilities, their functions, and their effects on resilience and sustainability. And then, Section 2.5 outlined the arguments and related hypotheses of the research to provide a foundation for the conceptual development and empirical investigation of the relationship between supply chain resilience and sustainable supply chain from a dynamic capability (SCDC) perspective. To wrap up the chapter, the conceptual model for this research was presented, outlining the theoretical connections between the constructs of interest in the studies and culminating in a subset of hypotheses that must be empirically tested in the subsequent qualitative and quantitative research steps.

Chapter 3: Research Methodology

The preceding chapter analyses the theoretical basis of the SCR & SSCM idea and the company's SCDC. It identifies the SCR and SSCM relationship's antecedents and interactions. This chapter lays the framework for future empirical research by defining these structures and sketching a tentative conceptual model based on the literature. This chapter explains how to research to answer the questions posed in the previous chapter. Because this thesis is concerned with two phases of the sustainable supply chain management process, practise identification and performance enhancement, a single study technique cannot adequately address the topic. Instead, selecting the appropriate research methodologies for each step is preferable, resulting in a multiphase research strategy. To build on these theoretical and conceptual findings and transform the preliminary conceptual framework into a theoretically sound model supported by evidence, this study employed a mixed-method research strategy, which included both qualitative and quantitative research phases. This chapter will discuss the outcomes of the qualitative analysis. In addition, this chapter will answer the first research question, "RQ1b: How do these methods function in Chinese construction?" This approach will connect the outcomes of each step of sustainable management. Eventually, it will provide a sustainable supply chain management strategy for the Chinese construction industry. The progression of this study chapter is depicted in Figure 3-1.

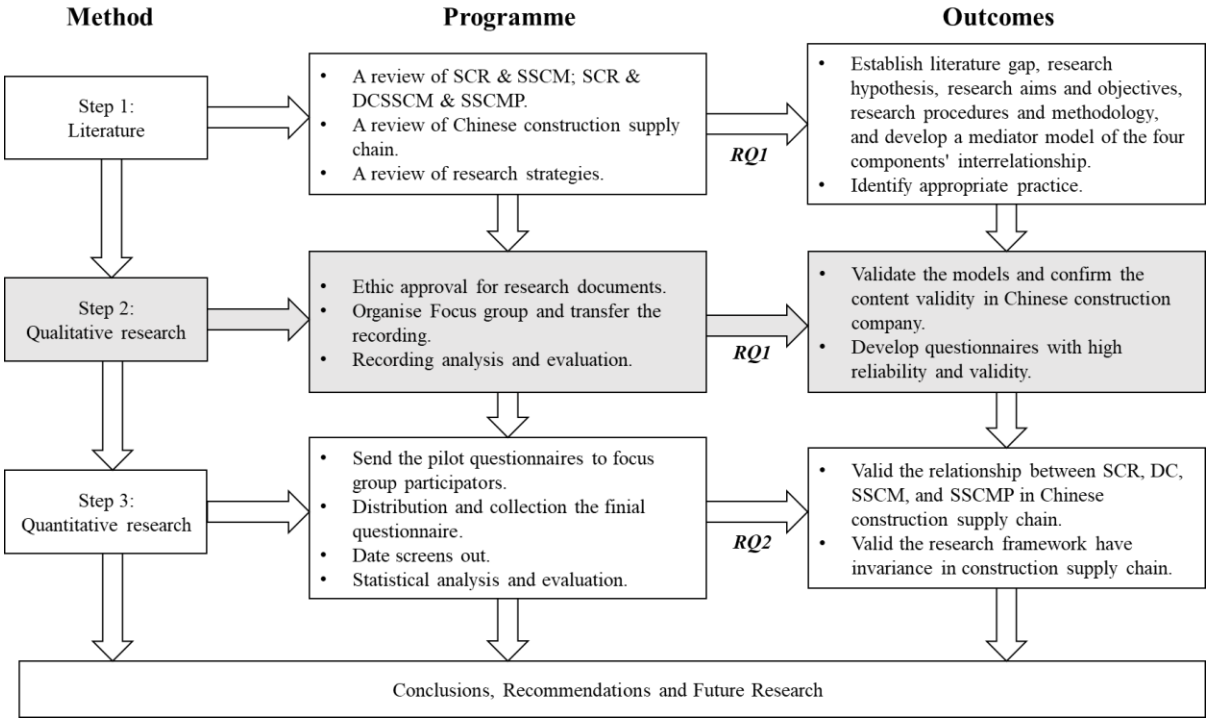

Fig.3- 1 Research Flowchart 2.

This chapter contains four major sections. The first section will discuss the research's overall design, including its philosophy, methodology, and techniques. The following two questions are primarily concerned with how the data was acquired and analysed. Mainly, the second portion will discuss the

research methodology for discovering and analysing construction practices. Focus groups are utilised in this stage as a qualitative research method to enhance the first conceptual Model and hypotheses derived from the literature review. In the subsequent quantitative research phase, this revised conceptual model, and its hypotheses were evaluated in the real world. In the third section, it shall discuss how the measurement and structural Model will be evaluated. This section will conclude with a brief overview of the chapter and ideas for subsequent sections. Figure 3-2 depicts the chapter's outline.

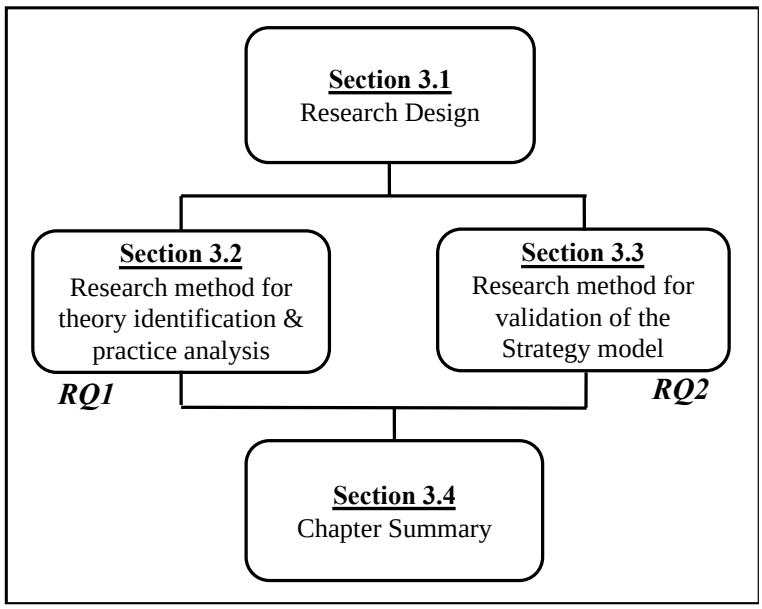

Fig.3- 2 The outline of Chapter 3.

3.1. Research Design

Research design is the overall strategy for doing the study (Bryman and Bell, 2011). It demonstrates how the research hypotheses will be used to achieve the study objectives (McDaniel and Gates 1999). It is a list of possibilities for responding to research questions effectively (Ghauri and Gronhaug 2002). It is comparable to a research method, which is the procedure for collecting and analysing data (Bryman and Bell 2011). Saunders et al. (2012) created a research framework that summarises these crucial aspects of research design. Figure 3-3 illustrates how this approach might be applied to this dissertation.

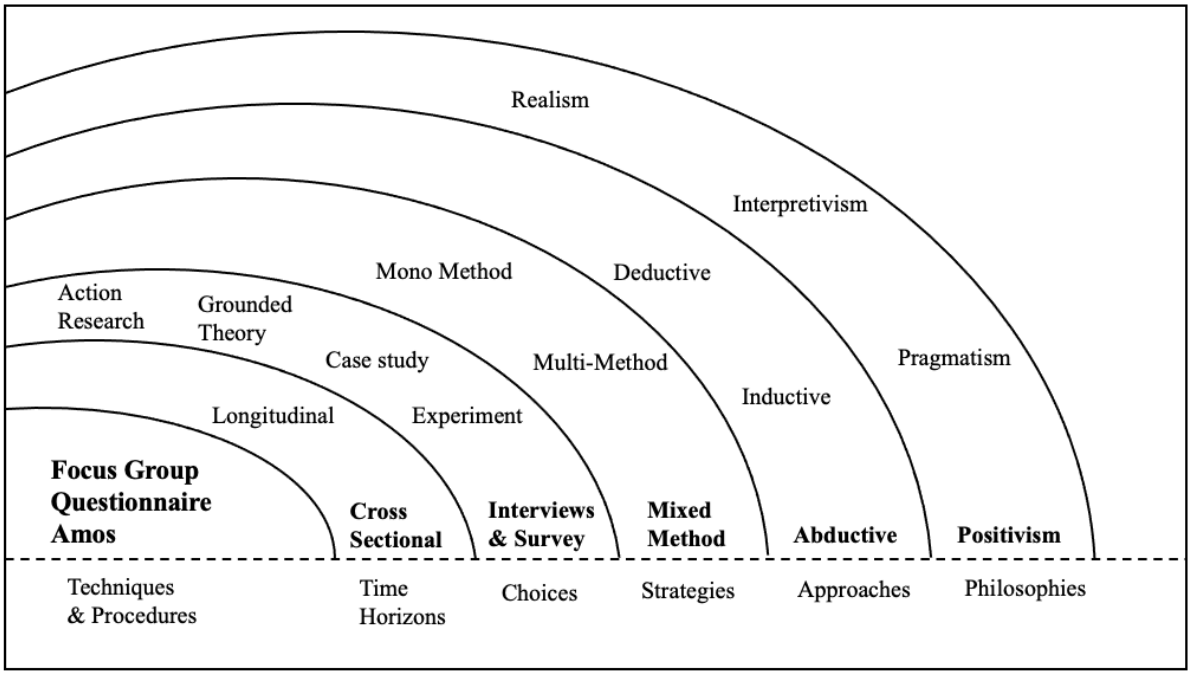

Fig.3- 3 The overview of the research design

Source: Adapted from Saunders et al., 2012

3.1.1. Research philosophy

The thesis's philosophical approach is grounded in ontology and positivism as epistemology. Questions of ontology pertain to the nature of social entities. Specifically, they concern with the assumptions about its operation (Saunders et al. 2012). In this setting, social entities might be viewed as independent from external reality, or they can create social constructs through their perceptions and actions (Bell & Bryman, 2022). The former is known as objectivism in social science, whereas the latter is known as subjectivism or constructivism. Objectivism presupposes an objective world and unchangeable truths about the nature of knowledge, which enables the identification of common knowledge and notions that serve as the foundation for social activities (Sarantakos, 2005).

Positivism asserts that objective reality exists outside of individuals, causing social scientists to study events like natural scientists (Bell & Bryman, 2022). By accepting an empiricist description of natural sciences, positivism extends scientific methodology to the social sciences (Benton & Craib 2001). This paradigm attempts generalisations based on the causality of variables (Sarantakos, 2005), necessitating the use of deductive reasoning and primarily quantitative methods dealing with statistical analyses of enormous datasets (Hong & Easterby-Smith et al. 2002). Benton & Craib (2001, p. 23) provided the following summary of positivism's characteristics:

1. Acceptance of the empiricist view of the natural sciences.

2. Science is regarded as either the highest or only authentic type of knowledge.

3. The scientific method as taught by empiricists may and should be used to the study of human mental and social existence in order to establish these fields as social sciences.
4. Once trustworthy social scientific knowledge has been developed, it will be possible to use it to govern or manage the behaviour of people or groups in society.

Considering that the thesis also explores settings and mechanisms that influence the resilient and sustainable management process using mixed techniques, it may have been grounded in critical realism (Bhaskar, 1975) or pragmatism (Tashakkori & Teddlie, 2003). However, positivism is the dominant epistemology of this study since (1) explanations demonstrate causality, (2) ideas are operationalised, (3) generalisation is pursued by statistical probability, and (4) sampling demands a large sample size (Hong & Easterby-Smith et al. 2002). According to positivism, this study is based on observable phenomena and is conducted objectively and value-free (Saunders et al. 2012).

This study focuses on China's construction supply chain, which differs from standard supply chain structures because it is typically centred on establishing projects. Consequently, objectively verifying the deployment of particular supply chain methods and procedures in the building business is vital. In addition, it is well known that supply chain research has historically been highly influenced by the positivist paradigm (Mentzer & Kahn 1995; Spens & Kovacs 2006). A recent systematic evaluation of supply chain research literature revealed that 830 out of 840 publications adhered to the positivist paradigm (Woo et al. 2011). Positivism is the cross-disciplinary consensus for supply chain and logistics research involving multiple disciplines. Specifically, SCR and SSCM incorporate a substantial amount of operations research, frequently grounded in engineering and the positivist worldview. In addition, adopting hypotheses from related areas necessitates deductive testing. SCR and SSCM's practice-oriented and solution-based research history seeks applicability and generalisations, necessitating an objective paradigm. SCR and SSCM are integrated into the study of physical resources, such as site construction processes and supply chain networks.

3.1.2. Research Approach

Abductive research, which blends inductive and deductive reasoning, was the research methodology employed for this study. The research technique uses theory (Saunders et al., 2012), which explores how theory and research are related (Bell & Bryman, 2022). Deductive, inductive, and abductive are the three methods used in research, according to Kovacs & Spens (2005). The deduction is the use of theory to explain or forecast real-world events, whereas induction is the use of real-world events to explain or predict occurrences (Ghauri & Gronhaug 2002). In other words, the deductive method is a tool to evaluate hypotheses derived from theories and demonstrate their integrity. In contrast, the inductive technique is a strategy to construct a theory by generalising specific data (Bell & Bryman, 2022). Thus, the primary distinction between the two methods is whether data or idea comes first.

According to Kovacs & Spens (2005), the logistics discipline does not have a long history of theory creation because it has always employed a deductive approach. In addition, they stated that the concept of being taken away could inspire the development of new theories in this sector. The distinction between an abductive and a deductive method is that an abductive approach attempts to comprehend a phenomenon from a new perspective (Dubois & Gadde 2002). Additionally, it differs from the inductive method in that it attempts to develop a new hypothesis by testing existing ones (Kovacs & Spens 2005). The abductive approach is a theory-matching procedure that alternates between theoretical and empirical studies (Dubios & Gadde 2002). A comparison of the three methods of conducting research is depicted in Figure 3-4.

Fig.3- 4 Three different research approaches.

Source: Spens & Kovacs 2006

Integrating these two distinct methodologies into a cohesive strategy is crucial to an abductive approach (Spens & Kovacs, 2006). This study's concept of sustainable supply chain management has been expanded upon by referencing the relevant literature. Existing measuring criteria can enhance the rigour of the study model. However, the gap between resilience and dynamic capacities is seldom addressed in the existing literature. Therefore, the evidence in the current observation will provide confidence for the development of the Model. At the same time, there is a lack of measurement factors for the construction industry, which requires this research to not only combine the existing measurement factors but also consider the characteristics of the construction industry to improve Questionnaire design, which also requires the combination of theory and observation in this research. It means that the research results can not only directly provide managers with professional insights but also develop new perspectives on the relationship between resilience and Sustainability. Resilience and sustainable management models will therefore function to bridge these approaches through the use of theory-

building and theory-testing analyses. This thesis will mainly use qualitative research methods employing inductive reasoning. Abduction will use both theoretical knowledge and real-world observations to find new frameworks for research models that improve resilience and long-term performance (Kovacs & Spens 2005). Deductive reasoning will be used to test the resilience and sustainable management models based on theoretical and empirical results. It will help explain effective and efficient management strategies and their causes.

3.1.3 Research Strategies

This research combines quantitative and qualitative methods. Here, the tactics for achieving the research objective and addressing the research questions are described (Saunders et al. 2012). In contrast to Saunders et al. (2012), who also included action research, grounded theory, ethnography, and archival research in addition to the three approaches mentioned above, Bell & Bryman (2022) offered experiment, survey, and case study. In contrast, Bell & Bryman (2011) employed only two quantitative and qualitative methodologies and provided distinct research designs and data-collecting criteria. Combining qualitative and quantitative tactics is highly sensible from the perspective of the abductive method. Because it mixes qualitative and quantitative methodologies. Specifically, a two-stage method was employed, with qualitative data collection and analysis occurring first, followed by quantitative data collection and analysis. In the literature, the mixed-methods approach is typically described as an iterative exploratory strategy (Creswell, 2009, p.211). Therefore, the applied research strategy is consistent with Carson & Coviello's (1996) demand for mixing methods to yield the most relevant results and following. Plewa (2010) reviewed the methodological suitability in management field research combining qualitative and quantitative methods when the goal is to either generate a greater understanding of the methods underlying quantitative results in at least partially uncharted territory or increase the validity of new measures through triangulation. The approach of this study can be further divided into exploratory, descriptive, and explanatory research (Spens & Kovacs 2006). This thesis draws from two of these study areas, as shown below. Figure 3-5 below shows the overview of the research methods.

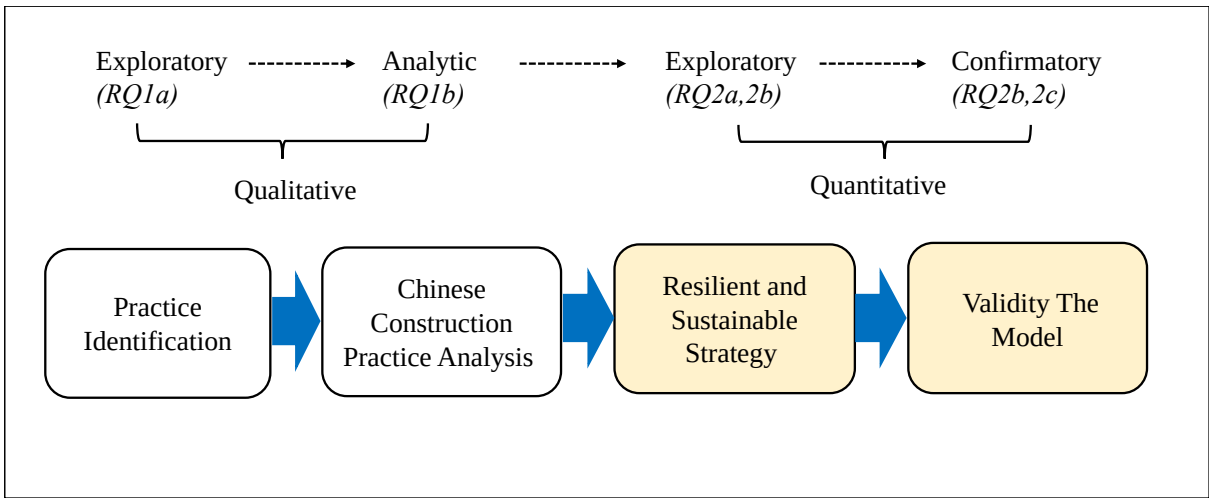

Fig.3- 5 The overview of the research methods.

3.1.3.1 Quantitative research

To better characterise the preliminary conceptual Model and hypotheses produced, qualitative research approaches were applied during the first exploratory research step, which was informed by the literature review's theoretical framework. Qualitative research is a strategy for delving into and making sense of complex phenomena by emphasising participants' perspectives and interpretations of such phenomena (Creswell, 2009). Because of this, it has been recognised as a powerful tool for learning about and gaining a firm grasp on fresh concepts and their interconnections and investigating events, behaviours, or activities (Carson et al., 2001).

Firstly, consider the supply chain's dynamic capability definition's freshness and the concurrent adoption of resilience and Sustainability as core operation practise. Meanwhile, the incorporation of dynamic capabilities to probe their interconnections is new. It is beyond the scope of traditional methods for evaluating competitive advantage. More importantly, scant information is available on possible frameworks for gauging the sustainable performance of an entire supply chain. Thus, an exploratory study was warranted.

Second, there is not yet a widely accepted definition of supply chain dynamic capabilities, despite the fact that dynamic capabilities have expressed a broad range of capabilities and assumed that several distinct processes and routines provide the micro-foundation of DC (e.g., Teece, 2007; Eisenhardt & Martin, 2000). The current body of knowledge describes data centres as "broad organisational activities" but "does not get into the exact micro-mechanics of how these capabilities are deployed and 'function'" (Ambrosini & Bowman 2009, p. 37). The supply chain DC's layout is also poorly understood, and its existence is often assumed without identifying its specific components (Lambert & Cooper, 1998; McDougall et al., 2021). It is difficult, if not impossible, to perform exploratory research as a first step. To establish DC as a theoretically sound state, one of the goals of the exploratory research phase is to determine whether or not dynamic capabilities exist in a company's supply chain and can be stated by the existing explanation. Following the recommendation of Lockett & Thompson (2001, p.743), this study "compromises some of the generalizability of quantitative investigations for a more qualitative attention to detail."

Third, does it exist in China's construction supply chain, even though some literature has begun to analyse the dynamic capabilities of supply chains, how to establish these capabilities, and how they relate to performance? That is why conducting basic exploratory studies like this is so important.

In conclusion, the SCR and SSCM are not well known due to the challenging study environment of sustainable performance in firms in the supply chain, as well as a minimal comprehension of the SCR

and SSCM, as well as their roles and effects. To analyse sustainable company performance from a DC perspective, it was determined that exploratory research approaches were the most valuable (Flint et al., 2002). Due to the complex three specific indirect effect (sensing, seizing, and reconfiguration) versatile nature of the supply chain DC construct, its antecedents, and the outcomes to be tested in this study, it was determined that an exploratory investigation of these constructs was necessary for the validity of quantitative research findings. Interviews are thought to be the most suitable method for exploratory investigations that can determine what, how, and why a social phenomenon occurs (Saunders et al., 2012). Structured, semi-structured, and unstructured interviews are the three main types of interviews (Bell & Bryman, 2022). An interactive group conversation, such as a focus group interview, can produce brilliant yet refined ideas. It is utilised in this thesis to pinpoint several supply chain practices for the building industry (RQ1 – exploratory study). The discussion is adopted to decide the contextual relationships between SCDC, SCR, and Sustainability through a series of discussions to reach a consensus (RQ1 – analytic study).

3.1.3.2 Qualitative research

In the second phase of qualitative research, researchers used what they learned in the previous phase to conduct descriptive and explanatory studies. The quantitative research phase evaluates the conceptual Model by establishing the most important predictors of outcomes or the elements that influence specific outcomes. Descriptive research is typically conducted to identify salient features of an issue and quantify how often they occur (Zikmund et al., 2003). Predicting correlations between variables is one application of descriptive research, but it cannot explain observed data patterns (Kinnear, 2021). This study used qualitative research, also known as confirmatory or causal research, to investigate the postulated underlying causal relationships (Kinnear, 2021, Zikmund, 2003).

The following considerations prompted this research to go on to Stage 2 of the quantitative study: A growing body of normative and conceptual findings (Teece et al., 1997; Teece, 2007; Eisenhardt & Martin, 2000; Kogut & Zander, 1996) has resulted from researchers taking exploratory approaches to supply chain DCs and resilience. These findings need to be aligned, operationalised and empirically tested. However, most of the existing empirical research either ignores the managerial resilience field entirely or is limited to the top supply chain industry (such as the automobile industry). To better comprehend and develop the SCDC and SCR perspective and to ensure that the conclusions are generalisable, many authors have emphasised the importance of conducting empirical research on supply chain DC and resilience (Hawass, 2010, Rothaermel and Hess 2007). Ambrosini & Bowman (2009, p. 30) stated, "Taking a dynamic capabilities perspective helps put the spotlight where it belongs: on the organisation's internal transformation processes. However, its current utility is limited due to a lack of empirical research and the challenges associated with generating managerial recommendations from this perspective." Exploratory research findings and conceptual enhancements have strongly suggested the need for empirical, explanatory research in this field to establish DC as a theoretically

well-grounded construct, one that is measurable against its outcome (sustainable performance) and that is also managerially relevant.

On the other hand, a survey collects large quantities of quantitative data that can be analysed deductively. According to research, surveys and case studies are the most widely used methods for studying SCM (Mentzer & Kahn 1995; Sachan & Datta 2005; Giunipero et al. 2008). It is because surveys are a low-cost and non-invasive method for measuring various SCM concepts (Mentzer & Kahn 1995). The primary purpose of a large-scale survey is to support existing hypotheses with empirical evidence (Forza, 2002). Consequently, survey methods can be utilised to validate a conceptual or empirical model based on theories and exploratory research. The goal of the surveys in this dissertation was to determine how effectively resilient and sustainable management strategies were being implemented and to demonstrate the validity of the strategy model (RQ2 –Exploratory & Confirmatory).

To sum up, this thesis began with a qualitative phase of exploratory research, which established a theoretical and conceptual foundation for a subsequent quantitative phase of description and explanation (confirmation). Following this, this research will go into greater depth regarding the research approaches incorporated to flesh out the research strategy.

3.1.4. Time horizon

Regarding time, the thesis is presented in a cross-sectional manner. A cross-sectional design collects data on multiple cases simultaneously (Bell & Bryman, 2011). In addition to questionnaires and structured interviews, it may incorporate systematic observation, content analysis, and official statistics. The most crucial aspect of this research strategy is the collection of multiple cases of quantitative/quantifiable data at a single point to illustrate relationship patterns. The longitudinal design could be another option for the study that would increase the reliability of the data from an outside perspective. A longitudinal study can determine the extent to which sustainable management is utilised in specific company environments. In addition, the long-term consequences of a strategy can be determined by comparing the supply chain's performance on two different dates. After a considerable amount of time has elapsed, conducting another questionnaire survey during the PhD programme would be difficult. This thesis focuses primarily on cross-sectional investigations at a particular time.

3.1.5. Research choices

To achieve its research objectives, the thesis employs a combination of qualitative and quantitative approaches. According to Saunders et al. (2012), who categorised various research methods into four distinct groups, the thesis employs mixed-method research since it incorporates both qualitative and quantitative data gathering and analysis approaches in a logical sequence. It was the only option that made sense, not only because the thesis has a solid, long-lasting structure with sequential steps but also because each step's study objective is best served by a distinct research method. Mixed-method research

has advantages that compensate for the limitations of a single approach and provide additional evidence to address research issues (Creswell, 2009). To avoid the methodological errors of prior research, the thesis carefully examines the merits of each study methodology. The next part describes the precise research methods used in this study to research as mentioned above strategy.

3.2. Qualitative research methods for theory identification & practice analysis

This stage established the research question for the study objective. How do these techniques function in Chinese construction? Several distinct approaches were combined to answer the research questions. In the novel mixed-methods study proposed by Creswell (2009), the study design is referred to as a "multi-stage design". Because it was chosen to answer successive research questions with a single objective: the practices identified in the first question become the objects of clustering in the second question, and the clusters are to reflect as components of a sustainable structure in the third question, leading to a holistic hypothesis analysis. Figure 3-6 below shows the process of practice identification and analysis.

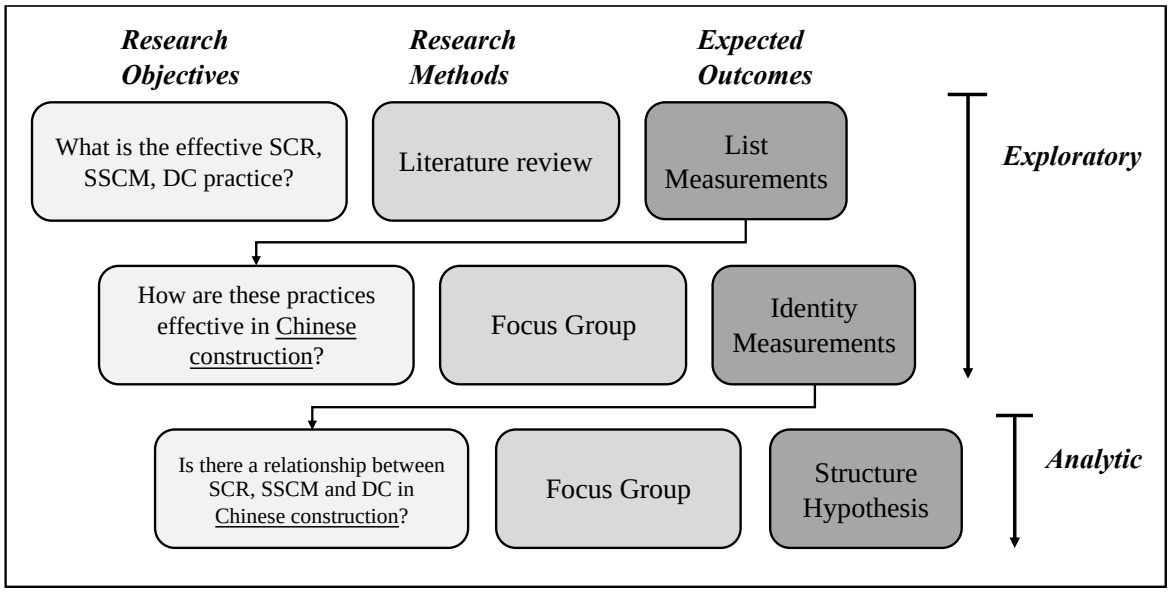

Fig.3- 6 Exploratory Logic of Qualitative Research

3.2.1. Focus group

The focus group approach is interviews with individuals who converse about a particular topic (Yin, 2018). It is a series of debates among several subject matter experts (Krueger, 1998). Focus groups are superior to traditional interviews because participants may converse with one another (Patton, 2002), and small groups can reflect the entire population (Bell & Bryman, 2022; Krueger 1998). This study employed focus groups to gain a more comprehensive and organised understanding of potential problems and their resolution in the Chinese construction supply chain. Unlike the case study method, which is employed in the majority of research today, focus group discussions can lead to conclusions

that reflect a broader spectrum of perspectives that have been refined. According to Sanchez-Rodrigues et al. (2010), the focus group method might be descriptive, exploratory, or explanatory, depending on the purpose of the study. This study employed focus groups to learn about resilient and sustainable practices and to build a taxonomy for further analysis, as there is a shortage of empirical research on the subject. As part of their SSCM research, Pettit et al. (2010) and Sanchez-Rodrigues et al. (2010) primarily utilised this technique to identify supply chain hazards. The focus group method was also utilised as a secondary method in SSCM research (Blackhurst et al. 2005; Jüttner et al., 2005; Craighead et al. 2007; Manuj & Mentzer 2008) to supplement or corroborate the findings of literature reviews or surveys. Although a series of group talks can yield a great deal of information, the focus group method is rarely used in SSCM research. According to Bell & Bryman (2022) and Krueger (1998), the focus group process consists of several steps.

- Developing questions
- Constructing participant groups
- Planning the discussion: schedule, venue and agenda
- Facilitating the discussion
- Implementing more rounds of discussions until theoretical saturation is reached
- Analyzing discussion outcomes

The second and third questions were addressed using the focus group technique. In the following sections, it will explain how the focus group approach was implemented in this study, including the participant groups, how the talks were prepared and conducted, and how much theory was addressed.

3.2.1.1 Informal interview and discussion.

In this study, informal interviews were required to guarantee the success of the focus groups. Even if the researcher has done a thorough literature review, 1) she or he has to know the interviewee well enough in advance to be prepared for any problems that may arise during the focus group. Second, this research want to make it easier for participants to understand the concepts it discuss in focus groups by enhancing the reasoning behind creating these concepts. As a result, the informal interview was planned before the focus group. It was launched on 13 May 2021, and the participator roles include authority and contractor. The interview questions aim to ascertain the degree to which the candidate is familiar with the supply chain's ability to adapt, survive, and evolve. Meanwhile, it aids academics in comprehending the fundamentals of China's building supply chain. The details of questions about the informal interview are shown in Table 3-1.

Table 3-1. Informal Interview Agenda

Agenda

1. Could you introduce the normal construction enterprise working process? what activities are included?
2. What do you think about the construction supply chain activities? What kinds of SC activities will you consider?
3. What is the usual risk in your SC activities? What type of risk are you most worried about？
4. What resilience practices have you done to mitigate these potential risks? If these risks occur, what is the usual treatment strategy?
5. What type of Sustainability do they care about? (TBL) In your SC, what kinds of sustainable practices will you do?
6. What are the risks of these sustainable practices in your supply chain? How do you deal with these risks? How do these risks affect your sustainable strategy?
7. Review the questionnaire

The Result of informal interviews is that the interviewees' understanding of resilience meets the research requirements. Their understanding of resilience measures is primarily contractual and legal. In their view, the law is the best way to protect them, and further interviews are needed to understand how resiliency measures in business operations. They concluded that the most common risks in the construction supply chain are quality, capital flow, and construction delay risk. Nevertheless, the biggest worry is the risk of capital and quality. According to the review in section 2.3, effective resiliency measures can mitigate these risks or disasters.

The results of informal interviews provide two of the most common processes for building supply chain understanding. One is based on developers, and the other is based on contractors, but for some small projects, the developers sometimes include contractors. Referring to the professional construction industry report like Engineering News Report (ENG), this research will agree that the contractor is the focus company and will include the developer. This decision will help Chinese participators understand the construction supply chain and be understood by international academic research. This kind of construction supply chain structure has also been supported d by CNKI and references (find the reference about the Three Gorges Dam). Based on the above process, the structure of Chinese Construction has been the initial design, as shown in Figure 3-7 to guide this research. The conversational interview served as the initial phase of the qualitative exploratory investigation. Therefore, more focus group participants are required so that the research can benefit from hearing a more comprehensive range of opinions from trained professionals.

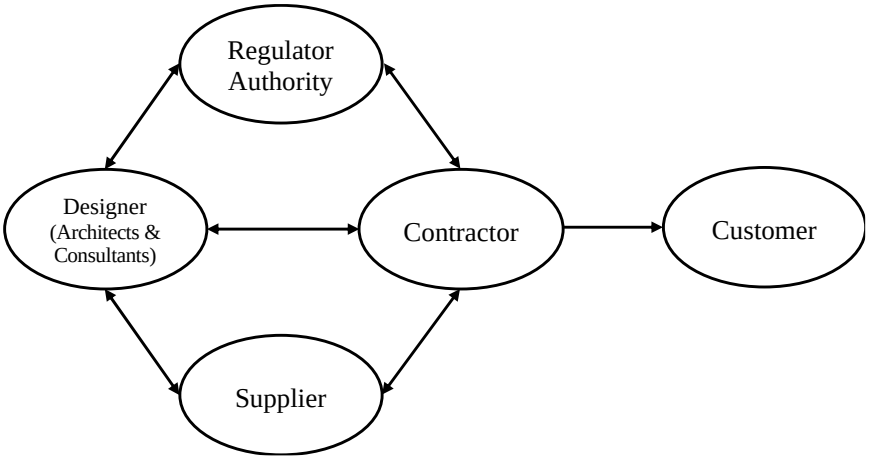

Fig.3- 7 Initial Structure of Chinese Construction Supply Chain.

3.2.1.2 Construction of focus group participant

The focus group technique is carried out through conversations with experts selected from a pool of Chinese building specialists. Several methodological difficulties must be clarified before assembling these construction specialists into groups. Participant sampling and the number of members in a group are crucial to attaining the research objective through focus group methods; therefore, this study meticulously addressed these concerns to maximise the effectiveness of the research method.

The first has to do with participant sampling. The operation of the construction supply chain is a complex process, not only because of the complexity of the construction supply itself but also because of the differences in the construction process in different countries due to the settings of different national institutions or cultural differences. This study summarises the basic process of the construction supply chain in China through literature reviews, including google scholar and CNKI and informal interviews. This complex process includes contractors, designers, suppliers, functional departments, and end customers. It is, therefore, best to consult all entities involved in the construction supply chain. Players with different interests in the construction supply chain will consider the issue from different dimensions, articulating details of resilience, dynamic capabilities or sustainable practices that other entities may overlook. Therefore, six categories of actors were selected: academics, contractors, functions, suppliers, designers and consumers. Scholars include roles in corporate consulting positions.

Purpose sampling, one of the non-probability sampling methods, was used to choose the members of the focus groups and ensure that they had sufficient industry experience (Saunders et al. 2012; Bell & Bryman, 2011). Each participant was a manager or higher in their respective organisations and had at least five years of experience in their individual sector. It indicates that they are specialists at managing and executing the entire construction process. The academic group consisted of building researchers with extensive knowledge of how to establish sustainable supply networks.

The size of each group is an additional consideration to keep in mind. In focus group research, the size of the group is crucial. In 1998, Krueger stated that larger groups would be more difficult to govern but would be better informed. So, Blackburn & Stokes (2000) noted that a group should have fewer than eight members, but Morgan et al. (1998) stated that the group should have between six and ten members. Conversations can assist a large group in generating more ideas, but the leader must be able to manage the group's size, and "targeted" discussions should be encouraged (Bell & Bryman, 2011). To get the most out of everyone and to ensure that the study could be conducted, the five top representatives of the building supply chain were picked for this study.

Based on the criteria above, five interviewers were chosen among the attendees of the "New Construction, New Building Development Seminar" scheduled for September 2020 in Chongqing. The study snowballed until it found two participants who met the study's criteria. Seven people had completed the process with potentially eligible partners, but only five showed up. Respondents were chosen to represent a wide range of business types to account for differences and eliminate bias. Table 3- 1 has a complete directory of available interviewees.

Table 3-2. The Profile of Focus Group Participant

No.	Company & Authority	Annual Sales	Experience	Type of company	Position	Focus area
#1	Company A	¥ 2 billion +	26 years	Design & Contractor	High manager	Project management and bidding
#2	Company B	¥ 500 million+	22 years	Contractor	High manager	Project management and bidding
#3	Company C	¥ 50 million+	6 years	Supplier	Assistant professor; Consultant	Construction life cycle
#4	Authority D	\	9 years	Regular Authority	Associate professor; Associate dean;	Building materials, engineering disaster prevention and mitigation.
#5	Company E	¥ 1 billion +	22 years	Customer	Professor; Consultant	Architect; soil engineer

3.2.1.3 Administration of the discussion

Semi-structured questions were posed, similar to an interview guide (see Appendix D2). Questions for the interview guide were culled from the formal discussion and the literature review. According to established research methods, there was no set order for the interviews to cover the themes. Nonetheless, all topics were given considerable thought and consideration to ensure a complete discussion. However, the interview guide included a vocabulary, and it was ensured that each participant received an identical interview guide. The focus group was held online using MS Team. Interviews lasted around 90 minutes.

Although tape recording restricts participant expressiveness, it can increase data completeness by preventing data loss during data collection (Carson et al. 2001). Therefore, academics must consider this approach to surpass its constraints, particularly if the interview subject is not deemed sensitive (Carson et al., 2001; Patton, 2002).

Focus groups have two primary objectives for the questionnaire's accuracy: 1) Determine the possible link between SCDC, SCR, SSCM, and SSCMP in the building supply chain, and 2) guarantee that practitioners and researchers in the area can comprehend the questionnaire. If there is a discrepancy in comprehension, the actual worker's interpretation will take precedence.

The primary objective of this focus group's first phase is to initiate a concentrated conversation on resilience and Sustainability through two primary problems. First, each participant will be questioned about their experience with resilient and sustainable supply chain management and the value these efforts have produced. They were then asked to explain a comparable activity they participated in. This stage aims to identify possible correlations between the study variables (SCR, SSCM, SCDC, SSCMP) in practice and prevent the deletion or loss of critical data due to participants' unfamiliarity with the variables. Second, to investigate the function of SCDC in these activities and to understand the micro-foundations of these complex and multidimensional occurrences in practice. Respondents were urged to describe the company-specific procedures and practise that serve as their primary success drivers. Finally, basic conceptual models taken from the literature were given to each responder, and their interdependencies and linkages were defined. The interviews proceeded until an agreement was achieved on the structure to be included in the quantitative analysis.

Stage 2: Following the group interviews, the researcher will provide the initial study questionnaire to all participants, who will fill it out and provide ideas regarding its implications. This phase likewise has dual objectives. The first objective is to guarantee the rationality and professionalism of the questionnaire's design, to prevent the occurrence of questions that are not understood or misinterpreted, and to ensure that the questionnaire's language conforms to the standards of the Chinese construction industry. The second step is to collect a small data sample and validate the questionnaire using boosting technologies.

3.2.1.4 Theoretical saturation

After a series of focus group conversations, data collection can be terminated when it achieves theoretical saturation, at which point no additional information can be gained from participants (Krueger 1998). To confirm the theoretical saturation, this study followed the methodology of Sanchez-Rodrigues et al. (2010) by analysing the group's practice and capability. The topic has reached its theoretical limit, as no new practises or capabilities have emerged. However, participants used different terms to characterise the same habits and competencies identified by prior groups. The practises and capabilities

identified in the focus group talks outpaced the number and breadth of practices reported in earlier SSCM research. Regarding this, additional group talks were unnecessary.

3.2.2. Result of the focus group

Researchers perform a systematic review and analysis of the interview data after completing a full transcription of the in-depth interviews, which may be repeated until a thorough grasp of the research topic, relevant structures, and appropriate measures are produced. Researchers use standard research methods to analyse qualitative data by categorising, ordering, and organising information and analysing relationships and patterns (Carson et al., 2001). This study created nodes for content analysis based on the findings of the literature review and the themes it wished to include in the interview guidelines (e.g., Huberman & Miles, 1994). These ideas and themes emerged from this process and were used to conceptualise the connection between SCR and SSCM from a DC perspective. The following sections detail the results of the qualitative data analysis that informed the formulation of the research framework and the hypotheses that guided the subsequent quantitative research.

In determining dynamic capabilities, it is worth noting that an enterprise only needs to possess one of these dynamic capabilities to be defined as having dynamic capabilities and be eligible to discuss it. This research breaks down dynamic capacity into its parts: sensing, capturing and reconfiguring. There is no simple embodiment for "dynamic capability" since it might be understood as a capability that a business demonstrates in the decision-making process; on the contrary, it is frequently reflected in the process of corporations contemplating decision-making and performance, as in the case of *"... For example, the BIM mentioned by A is a carrier and a database. Various majors can be coordinated through a platform to improve the efficiency of our work. Such as energy saving, capital saving, investment etc..." (F18).*

The limitations of an organisation are typically a deciding factor in whether or not BIM is selected as a technology. However. The use of BIM technology shows that the organisation can adapt its decision-making in response to the dynamic nature of the modern market and that it has established a sound boundary within which to operate when selecting the most appropriate "control" platform (Tecce, 2007).

"...more problems and costs are mostly human-to-human communication. For example, coordination between professions and industries... Now, with the new software and technology of BIM, when discussing the green perspective, how to control it? ....” (F14)

"...Because architects are a constant conversation and negotiation process from the preparation stage to the Construction. Regarding BIM, this process is more about human communication and time to consider..." (F16)

It is also recommended that businesses keep in touch with their suppliers consistently due to the supply chain's dynamic capabilities (Lee & Rha, 2016). F14 explains that the complexity of the building supply chain makes it difficult for workers to communicate effectively and work together. Despite this fad, the building industry must find a viable remedy, which is why BIM has become so pervasive. BIM may boost an organisation's internal green management capability and external coordination capacity. This demonstrates that supply chain agility may motivate new approaches to environmentally responsible management.

As with dynamic capabilities, not all of the characteristics of a business are resilient, to be called resilient. **Supply chain resilience** is likewise a capability inherent in decision-making, although it is more likely to be incorporated in the decision's Result than dynamic capability, for instance

"...there are many changes in actual contact, such as material suppliers. Material vendors need to establish a process that is constantly updated. In addition, some materials are not necessarily suitable for each of our projects during the design process... The current in the actual use process is unstable, and it is difficult to judge its suitability during the construction process. trouble and danger. Therefore, in the process of applying a new project, we propose to change it... There are deficiencies in the original steel mesh frame technology, so that we will adopt a new technology... In addition, the previous cooperation has Better to keep in touch, anyway, to keep the building process running..." (F20)

Although this is only a material decision, it contains a wealth of resilience thinking. First, knowing the possible defects of the used material will be able to summarise the reasons and find potential replacements in more recent situations. It reflects the agility of the business, where, when needed, the business can adjust supply chain operations to the extent required to execute decisions (AG1, the code followed chapter 2), as well as value the regular review of customer or project feedback in response to unexpected disruptions (AG 2, AG 3). We will learn from and think about how to avoid similar supply chain disruptions (CU2) by focusing on what any level of supply chain disruption shows us that can be improved. In addition, maintaining the iteration of suppliers through the iteration of materials is a way to value communication with partners (CC1). All these decisions have allowed the company to eliminate potential corporate inertia and keep it alive.

"... The supplier should negotiate the contract beforehand. In the case of ensuring that there is no pollution, it can be returned. This reduces unnecessary waste. Otherwise, if you cannot go back and do not use it for the next project, it will cause much waste..." (F20)

The study summarises nine **sustainable supply chain practices** based on the literature. IR is one of them. The purpose of investment recovery is to gain the most significant financial return from the disposal of waste materials. Hence IR should explore selling surplus products and assets in addition to

reusing or recycling them (Zsidisin & Hendrick, 1998; Zhu et al., 2008). The conversation above addresses the latter of IR. It is an economically sustainable decision for a sustainable supply chain. Decision makers determine these materials can be returned (IR1) while reducing material waste (ECC1). Therefore, to a certain extent, the harm of waste products to the environment is also continuously reduced. Therefore, the sustainable practices covered in the literature also align with the construction supply chain to a certain extent.

"... Some materials are not necessarily suitable for each of our projects during the design process... It is difficult to judge their suitability during the construction process. Once completed, it is very troublesome and dangerous. Therefore, in applying a new project, we suggest changing it... There are deficiencies in the technology of the original steel mesh skeleton so we will adopt new technologies. In the process, some technologies It is going to be phased out... just keep in touch with what was working well in the past and keep the building process up and running. "(F20)

The above information partly explains the effect of resilience on supply chain dynamics. Businesses constantly reflect on previous decisions (CC2) and make decisions that avoid potential problems the business will encounter (CU1). To a certain extent, these resilience decisions tend to keep companies iterating on suppliers (Rec3) and require companies to be able to identify new market information (Sen5). This process explains to some extent that flexible decision-making can affect the firm's ability to maintain a good dynamic.

3.2.3. Model Development

The findings from interviews were intertwined with existing literature to provide insights into how a firm can effectively manage resilient and sustainable practices. The qualitatively validated conceptual Model highlights the connection between SCDC, SCR, SSCM, and SSCMP in the construction supply chain and the content validity of these concepts. The qualitative data confirmed all proposed connections between the components. Therefore, the hypotheses produced from the literature review and verified by the qualitative research will be evaluated in the quantitative research phase. As a result of the qualitative data analysis, a conceptual model was developed, validated by the interviewees and reviewed in the following quantitative research phase. Figure 3-8 briefly show the research model. The objective of developing a research model is to understand the relationship between Sustainability and resilience in more detail. Also, it can be tested in the later stage using large-scale survey data. The research model consists of constructs and hypotheses that can create measurement and structural models, respectively.

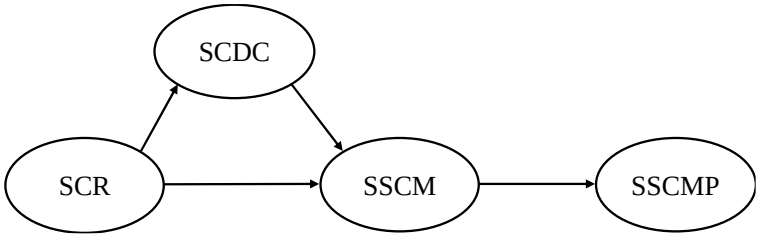

Fig.3- 8. Research Model (Abbreviated)

Note SCR, Supply chain resilience; SCDC, Supply Chain Dynamic capabilities; SSCM, Sustainable supply chain management; SSCMP, Sustainable supply chain management performance.

3.2.2.1. Measurement models

First, resilient and sustainable processes were conceptualised using empirical data and then populated with industrial practices. With a detailed description of each strategy, independently researched industrial practices at the operational and tactical levels were organised under the overarching strategies. Consequently, each strategy was comprised of practices gleaned from the interviews and the literature. Secondly, based on the interviews, resilient and sustainable outcomes with tight ties to sustainable performance were identified. Although the constructs were efficiently retrieved from the interview findings, the intricacies of the constructs were not examined in depth because most of the interview time was devoted to discussing methods. To this goal, a literature analysis was undertaken on these constructs to establish measurement models, focusing on the development of observable variables utilised as measurement scales. As measuring models, three types of practice and one performance have arisen.

3.3.2.2. Structural Model

With Figure 3-8 as a starting point, research hypotheses were formulated through interviews and a literature study. Since the fundamental Model posits that dynamic capability, resilience, and sustainability have positive relationships, the hypotheses were likewise constructed to assert that the relationships between components are positive. With the assistance of the hypotheses, a structural model was developed, which would be examined in the subsequent phase of the thesis.

3.3. Quantitative Research Methods for Model Validation

Following an overview of the overall research strategy and a summary of the qualitative study's findings, this chapter details the quantitative research method employed to examine the conceptual Model and hypotheses. The section evaluates the online survey method selected for the quantitative research section. The methodology used to collect the data is described in full, including the sampling strategy, the size of the sample, and the potential effects of nonresponse bias.

3.3.1. Questionnaire Design

For quantitative testing of models and hypotheses, surveys were chosen as acceptable data collection methods. When the objective of a study is to get quantitative data for statistical analysis from a broad sample of respondents in a cost- and time-effective manner, surveys are frequently viewed as a valuable instrument (Zikmund, 2003; Lukas et al., 2004). There are counterarguments such as meagre response rates, reliance on survey design and inability to influence respondents or not know whether the answers provided are reliable and authentic (Plewa, 2010; Lukas et al., 2004). There are various ways to survey, including in person, by phone, fax, mail, and even online. But "the suitability of a kind or channel for a certain study may rely on several aspects, including suitability, cost, time, sample control, data volume, data quality, and response rate" (Plewa, 2010, p. 81). After weighing the pros and cons of each option, the study decided that an online survey that participants could complete at their own pace would be the best data collection method for this survey. A potential disadvantage of web-based surveys is that respondents may misinterpret questions due to the lack of direct interaction between researchers and respondents (Lukas et al., 2004). Respondents may not always be aware of misunderstandings; if they are, they are more likely to leave the question blank than to contact the researcher (Plewa, 2010). As a result, response rates to online surveys tend to decline (Klassen and Jacobs, 2001).

In contrast, many people prefer conducting surveys online because of several benefits, starting with low setup costs (Aaker et al., 2004, Lukas et al., 2004; Veal, 2005). Moreover, since the respondents can reply to the online survey at the most convenient time, the collected data is very reliable (Plewa, 2010). It is considered particularly relevant given that the respondents of interest in this study were industry representatives in middle and upper management positions. Third, online surveys are the method of choice when dealing with controversial topics (Aaker et al., 2004). This survey topic may be considered delicate by respondents, as it includes questions about a company's talent and judgment and concerns such as comparing internal capabilities to those of competitors. Fourth, although response rates for online surveys were lower than those for face-to-face surveys, using a targeted sampling method supported by real estate associations ensured reasonably high response rates (Lukas et al., 2004).

After weighing the cost and accessible sample pool, this research decided that an online survey via email would be the most appropriate method for this study. Qualtrics is an online survey platform that allows data to be downloaded directly into SPSS for statistical analysis, ensuring the highest level of precision. The IP addresses of respondents who have previously completed a survey can be used to prohibit them from re-taking the survey.

The following sections delve into the details of the questionnaire layout, which requires a thorough familiarity with the focus and primary questions of the study (Veal, 2005). Section 2.5 and Section 3.2 construct a conceptual model and hypotheses and suggest linkages for this investigation. Based on these insights, a questionnaire was designed to collect data. Following a step-by-step approach (Veal, 2005;

Plewa, 2010), this research first defines the measurement, theory, and statistical analysis levels before discussing the structure's nature (formative or reflective).

3.3.1.1 The Levels of Measurement, Theory and Analysis

Before creating a questionnaire, the unit of analysis must be identified (Zikmund, 2003), and the levels of measurement, theory, and statistical analysis must be explicit (Currall & Inkpen, 2002).

The level of measurement first identifies the sampling unit or data source. For this study, a critical informant technique (Patterson & Spreng, 1997) was employed to obtain individual-level data from upper and intermediate managers. Although its use is still being debated, previous research has demonstrated that "a single key informant can provide accurate and valid information on both a personal and a theoretical level" (Plewa, 2010, p. 79).

Second, the theory level identifies the unit from which the research will examine and make conclusions (Klein et al., 1994). This study measures dynamic capabilities, resilience, sustainability, and performance at the firm level. Consequently, the firm serves as the unit of analysis for this study. Even though several studies of literature (Hawass, 2010; Bhamra et al., 2011) demonstrated that SCDCs and resilience are occasionally operationalised on the person or group level (research group and business unit), the vast majority of literature evaluates them at the company level. This study investigates the relationships between Dynamic capacities, Resilience, Sustainability, and business performance. So, the SCDCs for the entire organisation is measured rather than examining each research group or business unit.

Third, the level of analysis indicates how the data are statistically handled (Klein et al., 1994). It was also believed that the firm level was appropriate for examining all structures. People were asked about their firm's dynamic skills, resilience, and performance success.

In short, the level of theory corresponds to the level of analysis. This study's general approach and analysis level are at the company level. As a result, the Model and the current research only employ a single level of measurement, theory, and analysis.

3.3.1.2 Formative vs Reflective Measurement Models

It is important to clarify if the concepts used in the study are formative or reflective before developing scales for them. Indicator variables (sometimes called manifest variables) are used to assess latent (or hypothetical) characteristics that cannot be explicitly assessed in advance (Diamantpopoulos et al., 2006). The latent constructs used in a structural path model must first be operationalised in a measurement model that specifies the underlying causal links between the latent constructs and the indicator variables used to visualise the Model (Eberl, 2004). To lessen the impact of measurement

error, latent structures are often operationalised through a large number of indicators in the past (Jarvis et al., 2003). Two types of measurement models may be differentiated according to the direction of causation (arrow) in which they point: reflective measurement models (from construct to indicators) and formative measurement models (from indicators to construct) (e.g., Edwards and Bagozzi 2000, Dimantpopoulos et al., 2008). Despite having been around for a while, the difference has recently received much attention due to a debate about the proper operationalisation of latent constructs, which is especially relevant given the continued shortcomings in the use of formative indicators for concept evaluation (Jarvis et al., 2003; Diamantpopoulos et al., 2006). For this reason, formative models have been getting more and more study in recent years. Despite being well suited for the operationalisation of specific notions, their applications are typically disregarded in favour of reflective models, leading to high rates of misspecification, which in turn limits their usage in empirical investigations (Jarvis et al., 2003). Figure 3-9 shows the main differences between these two measurement models.

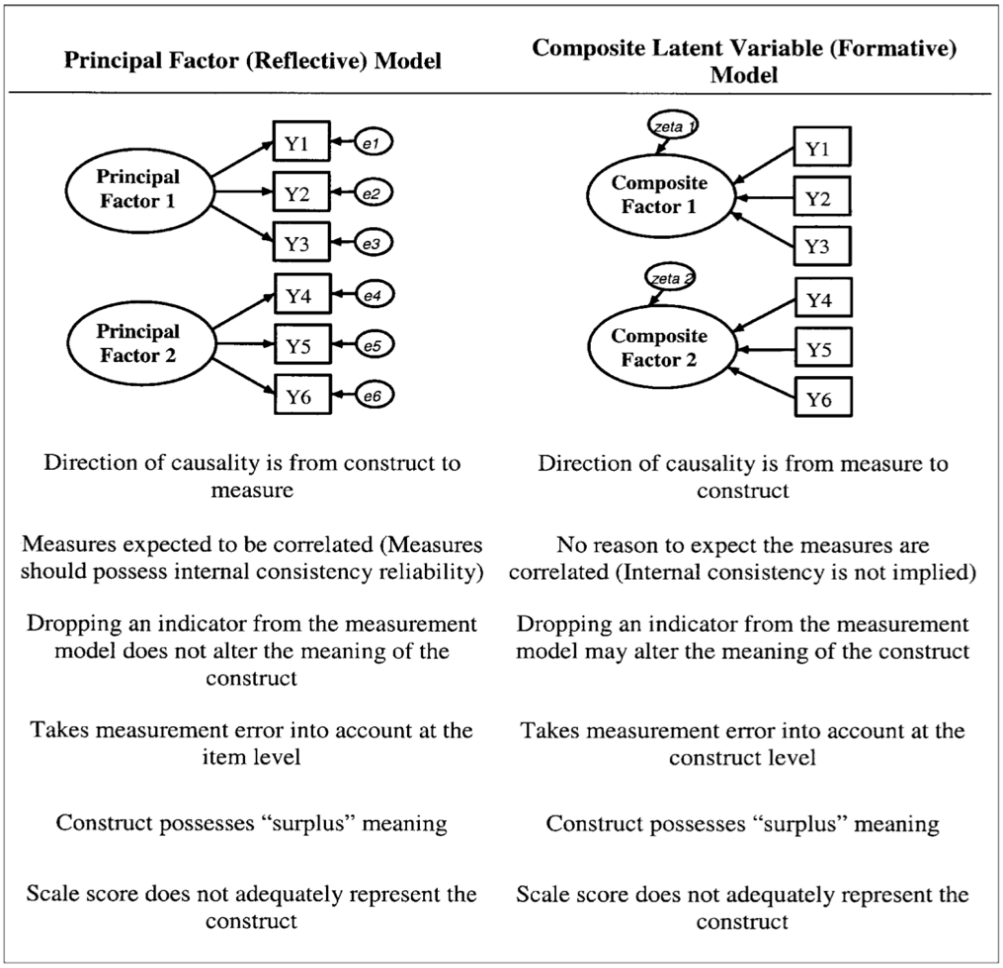

Fig.3- 9 Summary of Differences Between Types of Measurement Models.

Source: Adopt form Jarvis et al. (2003, p201)

According to the factor analytic approach, a **reflective measure** is believed to be determined by a latent component and a uniqueness factor (Jarvis et al., 2003). In the social sciences, reflective measurement

models have been utilised for a long time because "a change in the latent variable induces a change in all measures simultaneously", and all measures in a reflective measurement model must be positively associated (Dimantpopoulos et al., 2008, p. 1240). Thus, indicators of a latent variable are manifestations of that trait (Bollen & Lennox, 1991). As long as there are sufficient strong correlations between the indicator items, one can be substituted for another without affecting the underlying structure (Bollen & Lennox, 1991; Dimantpopoulos et al., 2008). Since the remaining indicators may cover all features of the latent construct, deleting specific items may not affect the measurement quality (Jarvis et al., 2003).

In contrast, **formative indicators** are defined in accordance with principal component analysis, in which the latent variable is modelled as a linear combination of the observables (Dillon & McDonald, 2001). According to formative measurement models, indications "generate" or "create" the latent construct. It implies that "the indicators determine the latent variable, whose meaning is determined by the indicators" (Dimantpopoulos et al., 2008, p. 1241). Therefore, the latent construct is the linear sum of its constituent measures (Edwards & Bagozzi, 2000). Considering this direction of cause and effect, each symbol reveals a different component of the hidden thought. Because each formative sign reflects a distinct input, they can be viewed as a "collection of various causes" (Jarvis et al., 2003). Therefore, indicators cannot be exchanged, and they might be associated in several (both positive and negative) ways (for a detailed discussion, see Bollen, 1984). In contrast to reflective models (Bollen, 1984), formative models do not require consistent concepts. It makes it difficult to determine the reliability and validity of formative conceptions (Bagozzi, 1994; Jarvis et al., 2003). Therefore, it is more necessary for the operationalisation of formative models to contain all of the unique inputs utilised to produce the latent variable than it is to achieve generally accepted quality requirements for the validity and reliability of the measurement (Diamantopoulos et al., 2008). In contrast, a formative model would no longer be viable if even a single component was removed.

Before any empirical inquiry, the nature of the indicator variables and the constructs must be stated a priori and related to the questionnaire design. It is to avoid incorrect specifications (Bagozzi, 1994). This research employed the selection criteria proposed by Jarvis et al. (2003), which were based on the characteristics above of formative and reflective models, to determine the nature of the constructs. Most of the constructs employed in this research are considered reflective constructs. It indicates that the study's assessment items (e.g., DCs) are reflective of the constructs under investigation.

3.3.1.3 Operationalisation of Constructs

Finding or creating suitable measurement tools was necessary to operationalise the constructs used in this study. It includes deciding whether to employ pre-existing scales for this study, whether to modify them to the research context, or whether new measurement instruments need to be established using traditional scale development techniques (Page & Meyer, 2000). When appropriate, measuring items

were modified based on already-validated scales in the literature. All the scales were framed about research objectives and tailored to the study's level of analysis (the business level). The measurement scales used in this study are described in Chapter 2 and are based on a discussion and justification of the operationalisation of constructs.

3.3.1.4 Pre-Test

General research criteria were adhered to in the development of the questionnaire in terms of content, language, organisation, and sequence to guarantee accurate and reliable evaluation (Veal, 2005). Objective care was taken to use precise, unambiguous wording to reduce measurement errors and avoid misunderstandings (Zikmund, 2003). A pilot test of the questionnaire was conducted in April 2021 with a group of experts consisting of four critical informants from the university with a focus on empirical research in Sustainability and construction-related fields and two high-level managers with industry experience in the area of interest.

Participants were invited to fill out the questionnaire and offer comments on any questions they found biassed, unclear, or ambiguous, as well as any problems they saw with the terminology used in the survey (Page & Meyer, 2000, Zikmund, 2003). The comment was also sought on the survey's feasibility, as well as its question structure and wording.

Also, participants were asked to log how long it took them to finish the survey so that researchers could examine this data and adjust the survey's duration accordingly (Plewa, 2010). The content was slightly edited, emphasising the respondents' professional jargon. Therefore, it rephrased questions that respondents found too complicated to ensure they were easily understood. The information acquired was beneficial to analyse if the content was accurately understood and, second, a more precise language (Plewa, 2010). According to the results of the pilot research, the information gathered from the questionnaires would give a reliable indicator of the variables of interest. The completed survey is accessible in Appendix E3.

It was also decided that it would be helpful to pilot the survey in a pilot study by conducting a test survey to assess its statistical properties. Initially, a survey link was sent out to 5% of the sample to assess the statistical properties of the various measures (Pavlou & El Sawy, 2011). There was no hesitation in approving the survey for Administration to the complete sample because of its reliability and validity across the board. Challenges with data collection and sampling are discussed below.

3.3.2 Data Collection

Data collection strategies are covered here: study population, sampling strategy, sample size, and sample design. To extrapolate outside the data set under study, empirical studies must first define the study population and then pick the sample (Zikmund, 2003). Additionally, it determines how far the

study's results may be extrapolated (Page & Meyer, 2000). This study's sample and its characteristics, including an assessment of the likelihood of nonresponse bias, are defined, as is the sampling frame and procedure utilised to get this sample.

3.3.2.1 Target Population

According to Zikmund (2003), the concept of the research's target population refers to "a group of people who share a set of criteria, such as geographic and personal qualities, and whose contributions are judged to be crucial to the achievement of the study objectives" (Lukas et al., 2004). Individual criteria, such as the size of the target firms, industry factors, such as the sector and kind of business, and geographical factors, such as the country and cities, may all be utilised to paint a comprehensive picture of the intended audience.

Personal characteristics. High or middle management positions (such as chief executive officer, managing director, project manager, supply chain manager, and human resources manager) and those working in the construction supply chain for enterprises of varying sizes were selected as the study's primary respondents. The premise underlying this specialised targeting is that these workers are highly engaged in resilience and sustainability efforts inside the company. It signifies that the respondent thoroughly understands the organisation's ethos, tactics, processes, and abilities and how these factors affect the organisation's long-term performance. Therefore, the responses will be pretty accurate. In addition, their position in the organisation places them high enough for a high-level view of the processes and routines, allowing them to see the big picture while still allowing them to be involved enough in the operational operations to assess the strengths and weaknesses of their firm and its competitive strategies. In addition, they sit high enough on the organisational chart to look down on the processes and routines below them and see the broad picture while being involved enough in the actual activities to assess the strengths and weaknesses of their own company. Only those who met the criteria established in the survey's initial screening questions could proceed with the rest.

Industrial characteristics. This cross-sectional analysis focuses on the construction sector and its supply chain. However, only sustainably active businesses in the building industry were evaluated for inclusion. For this reason, the study's eligible target organisations were chosen based on their commitment to sustainable practices, which is widely acknowledged as a relevant indicator of Sustainability in enterprises (Zhang et al., 2018). These companies will have gained a deeper understanding of the sustainability question. This article uses a statistic from the National Bureau of Statistics (2018) based on data gathered from business information and corporate annual reports on sustainability expenditures conducted in China in 2019. Moreover, the questionnaire included a supplementary question in which respondents were asked to assess the relative importance of five companies involved in the construction industry. Five main stakeholders are important to this research: the customer, the architect and consultant team, the construction company, the supply company, and

the regulatory body. It may learn more about these participants by perusing corporate annual reports and real estate groups.

Geographical characteristics. Only those working for Chinese companies were surveyed because the study's geographic reach was restricted to that country. It was seen as necessary to ensure that differences in country culture would not affect the results (Plewa, 2010). The core population for this study was the Chinese Construction firm population, and a representative sample was obtained using data from the National Bureau of Statistics (2018). The survey goes beyond just asking about the country of interest by laying out a few options for where respondents may see themselves living. This approach is preferable but not required to ensure that regional variations may explain for, and opportunity to explore, the prospect of future research if study models differ.

3.3.2.2. Sampling Procedure and Sample Size

Researchers might utilise many methods to choose samples for their research. According to the National Bureau of Statistics (2018), there were more than 300,000 construction companies in the China in 2017. Of them, 88,074 were general contracting and professional contracting construction companies with construction company credentials. Kotrlik et al. (2001) suggest a t-value of 1.96 at a 0.05 alpha level for sample sizes greater than 120. This research's sample size is much greater than 120. Thus, an alpha level of 0.05 is acceptable. A margin of error of 5% is allowed for the categorical variables used in this research (Kotrlik et al., 2001). According to the number of construction firms, the smallest sample size for this study would be 383. (Kotrlik et al., 2001, P48; Saunders et al., 2012, P266). With the assistance of local real estate groups, this research reached out to real estate associations in other provinces, and through these organisations, it received contact information for 1,200 construction businesses. From 15 November 2021 to 15 December 2021, the invitation email to participate in the survey was sent to 1,200 businesses. Additionally, reminders were issued a day after the original invitation. When the email message recipients clicked the provided link, they were sent to the Qualtrics landing page. A total of 772 people who followed the link to the survey on Qualtrics (64.3%) filled it out. At every step of the process, it was guaranteed that the participants were giving their full consent. What follows is a description of the two-stage sampling procedure used to get the final sample for this study.

Participants Eligibility. In the first pre-screening step conducted by Qualtrics, 154 respondents were eliminated from the sample due to not meeting predefined selection criteria defining the target group (participant information statement (PIS), company information, and position of participant) or not meeting security criteria (e.g., the respondent did not have a unique IP address, resulting in a compelling target sample omission). Individuals occupying these occupations and industrial sectors likely met the study's criteria. Following the ethical permission, the first page of the survey was used to describe the research goal, and complete confidentiality of the results was enforced (for a screenshot, see Appendix E3).

Data Quality. Only 590 questionnaires with all required fields were received after eliminating the ones whose respondents did not finish the survey or who consistently omitted data. There were 590 total responses. However, 150 people were deemed "unengaged respondents" and hence were not included in the analysis. Identify situations using questionnaire quality control characteristics that suggest respondents did not have enough time to complete the questionnaire thoroughly (19) or that their responses contained a systematic error and incorrect answers (46). The last round of validation produced a sample of 525 quality-proven completes (n=525) used to validate the conceptual Model via data analysis. Table 5.1 summarises how the final sample was selected, including the individual procedures that led to the final sample being utilised for quantitative analysis.

Table 3-3. Sampling Procedure and Sample Size

Progress	Result
Total number of Construction companies in China	
=General population	N=300,000
Determining Minimum Returned Sample Size for a Given Population Size	
= minimum sample size	n_{min}=384
The total number of people invited to the questionnaire:	
= those that received the invitation email	n_i=1,200
Total number of respondents	
=Those that entered the online survey	n_r=772
Stage 1 screens out - Participants' eligibility	
-used as test cases	-2
-blank respondents	-42
-based on the agreement of ethical approval	-71
-based on the company information	-36
-based on the position of the participant	-3
Number of samples after stage 1	
=those that qualified to enter the online survey	n_{s1}=618
Stage 2 screens out - Data quality	
-Based on Missing data > 5%	-28
-Based on Quality Control Variable: SD <0.5	-46
-Based on Quality Control Variable: Duration <240 sec	-19
Number of samples after stage 2	
=those that qualified for data analysis	n=525

3.3.2.3. Sample Structure

A total of 525 key informants from different companies were surveyed thanks to the sampling method, providing the data for an empirical assessment of the conceptual Model. Here is a rundown of all the specific characteristics and abilities possessed by the final respondents. Information on the final respondents is summarised in Table 5.2.

In line with the intended sample, responses were gathered from five distinct supply chain positions, including customer (4%), architects and consultants (39%), contractor (39%), supplier (12%), and regulatory authority (6%). Intriguingly, enterprises involved in the building supply chain might be further classified as Large companies (18%), Medium companies (53%), Small companies (25%), or micro companies (4%). Due to the cultural and economic variations across China's regions, these businesses are categorised as follows: North China (17%), Northeast China (12%), East China (46%), Central China (7%), South China (8%), Southwest China (7%), and Northwest China (3%).

96% of the final replies were in middle management, whereas only 4% were in top management. Twenty percent of the final responders held director or vice president positions. Included in the category of middle managers are project managers (45%), supply chain managers (27%), human resource managers (16%), and technical directors (8%).

Table 3-4. Data Structure

Number	**Type of data**							
	Panel A: Type of Company							
	Customer	Architects and consultants	Contractor	Supplier	Regulatory Authority			Total
N.	19	203	203	65	36			525
%	4%	39%	39%	12%	6%			100%
	Panel B: Size of company (Ten thousand yuan)							
	Total assets ≥ 80000	80000>Total assets ≥ 5000	5000>Total assets ≥ 300		300>Total assets 40			Total
N.	97	279	133					525
%	18%	53%	25%		4%			100%
	Panel C: Location of company							
	North China	Northeast China	East China	Central China	South China	Southwest China	Northwest China	Total
N.	88	61	241	39	42	38	16	525
%	17%	12%	46%	7%	8%	7%	3%	100%
	Panel D: Position of participator							
	Director/Vice President	Project Manager	Supply chain manager	Human Resources Manager			Technical director	Total
N.	20	238	142	80			45	525
%	4%	45%	27%	16%			8%	100%

As can be seen from the outline provided by the completed sample, the intended recipients, as described in section 3.3.2.2 were reached. After discussing and sketching the final sample structure, the following section details the probable nonresponse bias in the data.

3.3.2.4. Nonresponse Bias

Nonresponse bias is a potential issue with survey tools. It has to do with the number of individuals who did not complete the questionnaire and the likelihood that their responses would have been vastly different from those who completed the questionnaire (Pearl & Fairley, 1995). First, attempts were taken to obtain as many responses as feasible, which reduced nonresponse bias significantly (Armstrong

& Overton, 1977). The questionnaires were distributed with the consent of everyone who completed them. However, researchers tend to ask too many questions about the individuals being compared, and there may be privacy concerns.

Second, to ascertain nonresponse bias, this research compared early and late sample respondents across selected relevant characteristics using the procedure outlined by Armstrong & Overton (1977). This method was used to check for discrepancies between early and late responses. Those who answered in the first two weeks (325) were considered early respondents, whereas those who responded afterwards were considered late (447). In order to check for differences in variances, this research used a t-test to see if the two groups had similar means (Coakes & Steed, 2003). There were no statistically significant differences (p 0.05) between the two groups for all of the demographic or parameter variables analysed. Given that there was no discernible difference in variance or mean between early and late respondents, it is safe to conclude that nonresponse bias is not a significant concern and that the sample size is enough for carrying out additional studies.

Common method bias, possible bias in the data generated by a systematic external measurement error and consequently attributed to the measuring methodology utilised, was also investigated alongside nonresponse bias (Jarvis et al., 2003). To calculate the likelihood that the data include common method variance, this research followed the methods and presented the results specified in chapter 4.

3.3.3. Structural Equation Modelling SEM

Structural Equation Modelling (SEM), which comprises Covariance-based SEM (CB-SEM) and Partial Least Squares SEM (PLS-SEM), is a second-generation data analysis method (Bagozzi and Fornell, 1982). By modelling the interactions between independent and dependent variables, it may evaluate related hypotheses in a single, systematic, and thorough analysis (Gefen et al., 2000). The second-generation approaches ANOVA and MANOVA are constrained in that they can only examine one connection layer at a time. On the other hand, SEM permits researchers to simultaneously evaluate several dependent connections (Gefen et al., 2000; Hair et al., 2018). SEM is more precise than other multivariate methods because it considers measurement and structural errors and examines interactions, nonlinearities, and correlations between a model's independent variables (Diamantopoulos & Siguaw, 2000). SEM is superior to other multivariate methods because it may account for features that cannot be observed or measured. It is a common topic in the marketing literature (Kumar, 2018; Gaskin, 2012), and the work demonstrates it.

Despite the methodological virtues of SEM, only a few resilience and sustainability studies have employed SEM as an analysis methodology. As far as the author is aware, Braunsheidel & Suresh (2009), Cheng et al. (2012), and Kern et al. (2013) describe the application of SEM to SCM research. Curiously, these three investigations lack any shared constructs. In addition, the resilience techniques were not measured explicitly. Contrariwise, numerous studies employed regression analysis of multi-

scale variables. These investigations will be exemplified by Zsidisin & Ellram (2003), Wagner & Bode (2006; 2008), Zsidisin & Wagner (2010), and Bode et al. (2011). Despite this, the number of academics employing regression analysis remains low.

3.3.3.1 CB-SEM(Amos) vs. PLS-SEM

CB-SEM (Amos) and PLS-SEM are two types of SEM. While they test the measurement model and structural model simultaneously, there are differences in the analysis objectives, statistical assumptions, and nature of the fit statistics, among other things (Gefen et al. 2000). Because CB-SEM is a more popular analysis technique than PLS-SEM, terms, the analysis process. The way results are presented has all been heavily influenced by CB-SEM (Chin, 2010). To clarify why CB-SEM is a suitable strategy for this research, it is necessary to define the distinctions between these two procedures.

(1) Analysis objectives

CB-SEM is concerned with how well the model matches the theory, whereas SEM provides parameter estimates that can be utilised to create predictions (Hair et al., 2010). PLS-SEM aims to demonstrate high R2 and significant t-values, similar to how linear regression tests the null hypothesis that there is no effect by demonstrating high R2 and significant t-values (Gefen et al. 2000). On the other hand, as CB-SEM establishes the null hypothesis for the entire model, it attempts to examine the complete set of all the pathways created by implementing theories (Gefen et al. 2000). This study must investigate the relationship between resilience and sustainability, as well as the relationship between resilience and dynamic capability. In this instance, CB-SEM (Amos) is the superior option.

(2) Statistical assumptions

PLS-SEM makes few assumptions about the data, particularly regarding the normality and kind of the data (Hair et al. 2017; 2021). CB-SEM presupposes multivariate normality and employs Maximum Likelihood (ML) functions as its default estimate technique. Even though there are methods to deal with non-normalcy, such as weighted least squares and bootstrapping (Byrne, 2016), the assumption of normality cannot be eliminated entirely. On the other hand, PLS-SEM estimating techniques do not require parametric inference to function.

(3) Analytical technique

PLS-SEM is an analysis technique based on regressions, whereas CB-SEM is based on covariance (Hair et al., 2017; 2021). Similar to regression, PLS-SEM derives its coefficient by examining the difference between the indicator and the mean. However, it also uses iterative analysis, such as CB-SEM, to distinguish the structural model from other models (Gefen et al. 2000). In contrast, PLS-SEM cannot provide model fit statistics like CB-SEM.

(4) Formative & Reflective construct

Latent variables cannot be measured directly. Hence measurement models based on indicators or previously measured variables are always required. CB-SEM presupposes that the observed and latent variables are the same and that the arrows connecting the observed and latent variables point away from the latent variables (Gefen et al. 2000). Latent factors, therefore, cause indicators for these reflective components. PLS-SEM can be utilised to examine formative measurement, which occurs when indicators cause latent variables (Gefen et al., 2000; Hair et al., 2018). However, this research considers a reflective construct. Thus, CB-SEM (Amos) will be more suitable for this case.

Table 3-5. Comparisons between CB-SEM and PLS-SEM

Criteria	CB-SEM	PLS-SEM
Research Approach		
Analysis of overall model fit	Supported	Supported
Analysis of all the paths, measurement and structural, in one analysis.	Supported	Supported
Analysis of confirmatory factor analysis	Supported	Supported
Analysis of formative observed variables	Supported	Supported
Analysis of observed reflective variables	Not Supported	Supported
Analysis of specific and error variance of the observed variables into the research model.	Supported	Not Supported
Allows the setting of non-common variance of an observed variable to a given value in the research model.	Supported	Not Supported
Permits rigorous analysis of all the variance components of each observed variable (common, specific, and error)	Supported	Not Supported
Provides a statistic to compare alternative confirmatory factor analyses models	Supported	Not Supported
Capabilities		
Examines interaction effect on cause-effect paths	Supported	Supported
Examines interaction effect on item loadings	Supported	Supported
Examines interaction effect on non-common variance	Supported	Not Supported
Examines interaction effect on the entire Model	Supported	Not Supported
Can cope with a relatively small sample size	Not Supported	Supported

Source: Adapted from Gefen et al. 2000

In the SCM research, Kern et al. (2012) highlighted that the small sample size is the main reason for selecting PLS-SEM as the appropriate analytical technique. Regarding this research, firstly, the sample size is not a challenge. The researchers estimate the valid reply will be over 400. Secondly, the hypotheses generated in this research have both individual causation paths and confirmatory aspects. Another important reason is the analysis of residual non-common errors, which are against the analysis technique of PLS-SEM. Because of the self-design questionnaire, it is necessary and important to confirm the non-invariance and common method variance of the data from the questionnaire. CB-SEM showed more methodological fit to this research than PLS-SEM did in these aspects. CB-SEM was adopted in this research for the model validation technique.

3.4. Chapter Summary

This chapter outlined the overall study plan for this thesis and described the methodologies employed during each research phase. First, it discussed the general research philosophy, process, strategy, time frame, and selection. The section then demonstrated and clarified why the two phases of research employed distinct data collection and analysis methods. Qualitative research encompasses the sampling procedure, the focus group's conduct, and the results' analysis. The quantitative research section discussed in depth why the online survey was chosen as the most efficient method of data collection. Then, it addressed the measurement dimensions, theoretical framework, statistical analysis, and concept operationalisation that went into the questionnaire's development. After outlining the characteristics of the intended sample, it went on to detail the methodical sampling approach taken to contact them. From 1200, 772 valid responses were collected over a month. After the initial two rounds of exclusion, 525 responses were included in the data analysis used to assess the conceptual Model. It was an excellent cross-selection of the target population and allowed for the extrapolation of study results beyond the acquired data. It finished with a detailed explanation of the reason for choosing Amos 26. The following chapter will apply statistical analyses to empirical settings to investigate the interconnected features of resilience, Sustainability and dynamic capability to break the traditional engineering view between Sustainability and resilience.

Chapter 4: Data Analysis and Result

This chapter discusses the distinct stages of data analysis and demonstrates the consequences of the quantitative research step. Using the statistical programmes SPSS and AMOS, structural equation modelling (SEM) techniques were used to analyse the data. This chapter consists of three parts. First, the 525 samples obtained in the previous chapter are verified by SPSS, which ensures that the samples have sufficient validity to support the following analysis. Then Amos was used to verifying the research model proposed in the previous chapter. The qualified research model answered the research question "RQ2a: What is the relationship between SCR, SSCM and SCDC?" in a statistical sense. Finally, based on the establishment of the research model, an in-depth analysis of the research model, including mediation and invariance analysis, was carried out, which respectively answered "RQ2b: how dynamic capability mediate the relationship between SCR and SSCM", "RQ2c: Is the model valid on the Chinese construction supply chain?". Figure 4-1 identifies the progress of this chapter in the research. The overview of this chapter follows Table 4-1 and Figure 4-2

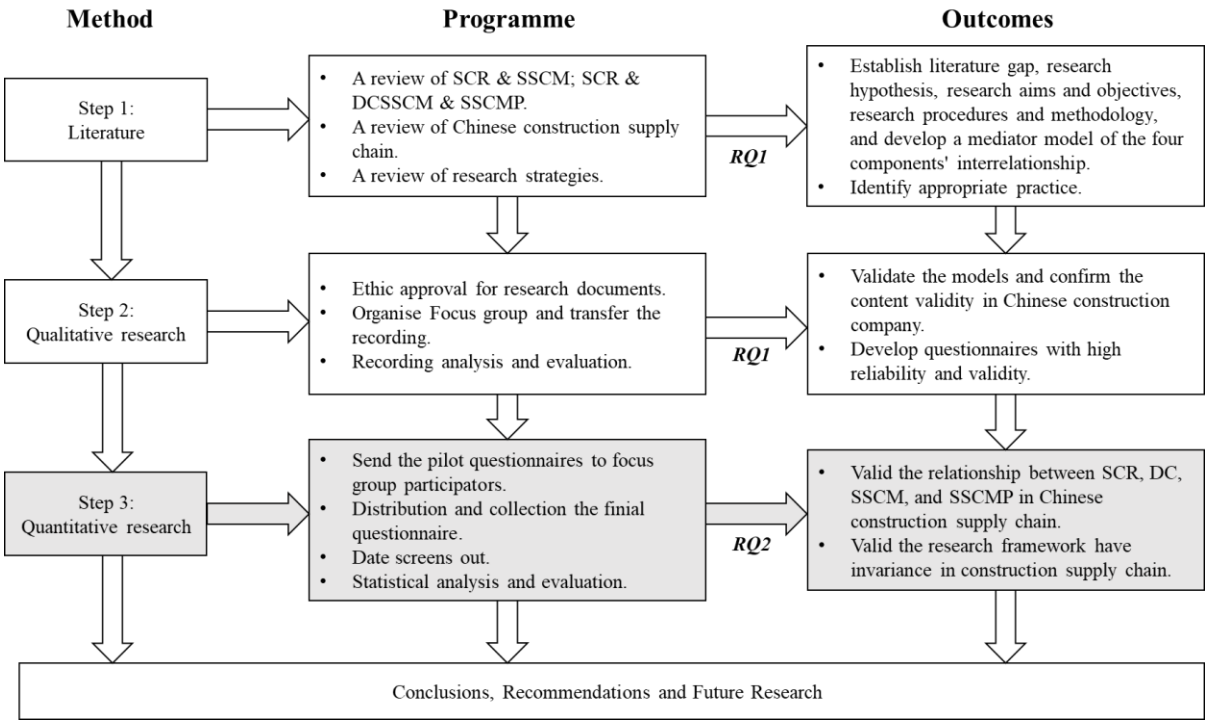

Fig.4- 1 Research Flowchart 3.

Table 4-1. Overview of Chapter 4 Result

Analysis Content	Analysis aims	Hypotheses	Result
Normality test. Exploratory Factor Analysis (EFA). Confirmatory Factor Analysis (CFA). Goodness-of-fit. Common Method Variance (CMV).	To ensure the data are of sufficient quality for statistical analysis.		
Second-Order Model	1)To reflect the specific management practices of variable, also find a common variable for practices. 2) Simplifying model.	$H_{1a\ to\ 1d}$: CC, RE, CU, AG positively reflect SCR in	Support
		$H_{2a\ to\ 2c}$: SEN, SEI, REC positively reflect SCDC	Support
		$H_{3a\ to\ 3i}$: SPD, EP, ECC, IGM, IR, DM, SM, CDI and RL positively reflect SSCM.	Support
		$H_{4a\ to\ 4d}$: ENVP, OPEP, ECOP, SCOP positively reflect SSCMP.	Support
The Structural Path Model	The causal relationships between the constructs are tested.	H_5: SCR is positively associated with SSCM.	Support
		H_6: SCR is positively associated with SCDC.	Support
		H_7: SCDC is positively associated with SSCM.	Support
		H_8: SSCM is positively associated with SSCMP.	Support
Mediation (ME)	To find a way to control the variable of SSCM.	H_9: SCDC mediates the relationship between SCR and SSCM.	Support
Specific Indirect Effect (Multi-ME)	1) The likelihood of parameter bias due to omitted variables is reduced (e.g., REC, SEN). 2)It is possible to determine to what extent specific M variables mediate the X->Y effect.	H_{9a}: SEN mediate the relationship between SCR and SSCM.	Reject
		H_{9b}: SEI mediate the relationship between SCR and SSCM.	Support
		H_{9c}: REC mediate the relationship between SCR and SSCM.	Reject
Invariance Analysis (Multi group comparison)	1)Whether the respondents of the questionnaire had the same understanding of the survey items. 2)To identify areas of low performance, diagnose the nature and cause of the problem, and take corrective make-decision	H_{T1}: Invariance of unconstrained between Arc and Con.	Support
		H_{T2}: Invariance of measurement weigh between Arc and Con.	Support
		H_{T3}: Invariance of random measurement residuals between Arc and Con.	Reject
		H_{T4}: Invariance of structure covariance between Arc and Con.	Support
		H_{T5}: Invariance of latent mean of Structure mean between Arc and Con.	Support
		H_{T6}: Invariance of path coefficients between Arc and Con.	Reject

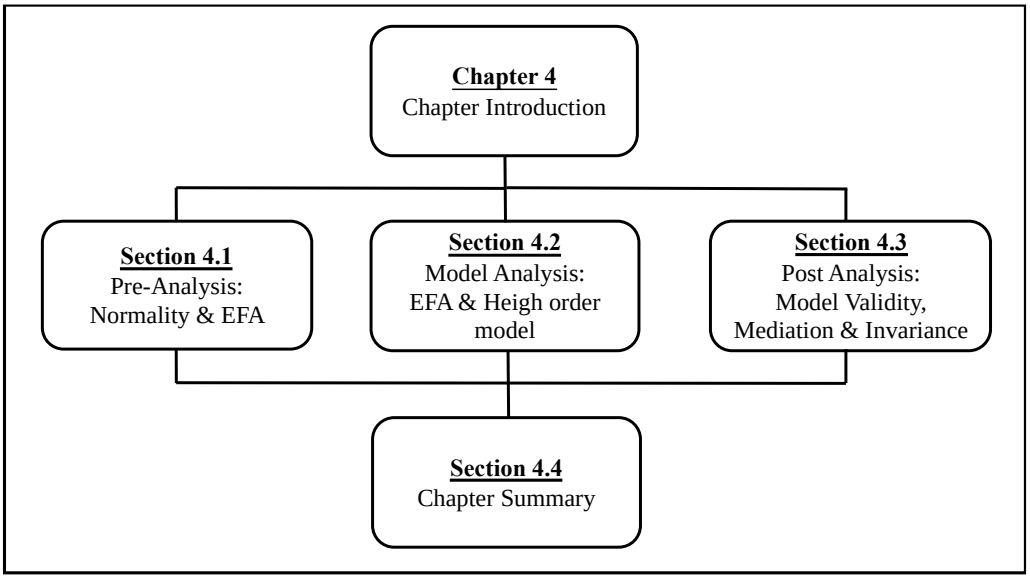

Fig.4- 2 Outline of Chapter 4

4.1 Pre-analysis: Normality & EFA

Exploratory Factor Analysis is the first stage of SEM, and its description follows the discussion of data preparation and normalisation.

4.1.1 Data Preparation

This research utilized a three-step data preparation approach to ensure accuracy and relevance of the observed information for the study. First, any respondents with missing data on more than one question (5%) were removed from the sample using SPSS 26 to prevent bias, and missing values were estimated using the Maximum Likelihood (ML) method which is considered least biased. Second, unengaged replies were eliminated by computing the standard deviation (SD) for each response and by identifying responses falling outside the expected task time. The time taken by respondents to answer the questionnaire was used as a control variable. Responses that took less than four minutes were eliminated. The duration choice was influenced by Kerstin (2021) and adapted to suit the nature of this study's questionnaire. As a result of this step, a total of 93 respondents were removed from an initial set of 618, leaving 525 respondents for further analysis. Lastly, outliers were identified but due to the nature of the Likert scale used in this study, extreme responses were not treated as typical outliers.

4.1.2 Normality

The assumption of multivariate normality in the data is a crucial prerequisite for the reliable implementation of SEM methods. According to Hair et al. (2018), normality relates to data distribution for a specific parameter. Skewness and kurtosis were analysed to confirm univariate and multivariate normality.

Skewness: The skewness of the data reflects the degree to which the responses are concentrated at either extreme. Values of skewness varied from -2.81 to -.840 in Appendix B1. All variables met the requirements since values below 1 are regarded to be negatively (left) skewed (Hair et al., 2018).

Kurtosis: The Kurtosis measure looks at whether a data set has a peak or a flat distribution (Gaskin, 2012). A critical ratio and univariate kurtosis value for each of the 93 items (i.e., Z-value). All variables met the +/-1 threshold, as shown in Appendix B1, with positive values ranging from .004 to .873 and negative values from -.009 to -.568. All results indicated univariate normality (Lei & Lomax, 2005).

Multivariate normality: Only skewness values more significant than 3 and kurtosis values greater than 10 may be problematic when evaluating multivariate normality, as stated by Kline (2015). A multivariate kurtosis score of 70,621 suggests multivariate non-normality. Nonetheless, considering the pervasive lack of multivariate normality in research practice (Byrne, 2016), this is judged acceptable.

Various methods were employed to mitigate the influence of multivariate non-normality in data analysis. Firstly, the Comparative Fit Index (CFI) was used for evaluating model fit because the traditional goodness-of-fit measure (Chi-Square 2) is susceptible to non-normality (Lei & Lomax, 2005). Secondly, the Bollen-Stine bootstrapping technique was implemented to diminish the weight of normality assumption for the parameter distribution (Hair et al., 2018). This method uses statistical resampling to create numerous subsamples from the original sample, enabling the reconstruction of any sampling distribution (Preacher et al., 2007). Due to its ability to provide a modified bootstrap technique for the Chi-Square goodness-of-fit measure and validate the theoretical model and assumptions, it was selected for the data analysis (Byrne, 2016).

4.1.3 Exploratory Factor Analysis (EFA)

Exploratory factor analysis (EFA) may be used without forcing a present structure on the output to find the factor structure of a collection of observed variables (Child, 1990). The EFA is typically the first stage of an SEM strategy due to its exploratory nature. A Confirmatory Factor Analysis (CFA) is then performed based on these results. This final measurement model for the latent components will be put into the structural path model, and the purpose of the CFA is to verify the predicted relationships.

Based on the correlations between the observable variables (measurement items), EFA generates a smaller number of underlying factors (latent constructs) that incorporate all relevant information on the linear interrelationships between the variables in the data set (Hair et al., 2018). Thus, the EFA method aims to simplify the underlying data structure by focusing on a few key variables (Hair et al., 2018). Because of this, an EFA strives to generate constructs that are distinct (discriminant validity), evaluate a single notion (convergent validity), and can be relied upon (reliability) (Gaskin, 2012). A total of 93

measurable factors were incorporated into the EFA from the survey. Measuring items in the questionnaire already expose the expected factor structure. Adopting well-established measurement standards does not guarantee that a given product will accurately gauge its target. Therefore, it was deemed useful to first explore, in an exploratory study stage utilising EFA, which items belong to which constructs since this aid in determining the component structure based on the responses of the participants. On the other side, an EFA may be used to pinpoint the variables that, despite theoretical considerations, do not fit with the constructs. As a result, EFA is a helpful method for preparing variables for use in a CFA, the next stage in structural equation modelling (SEM) (Gaskin, 2012). In light of this, factor analysis is widely acknowledged as an essential part of SEM.

4.1.4 Factoring Method and Rotation Type

Three critical concerns in Exploratory Factor Analysis (EFA) are: (a) factor extraction approach, (b) rotation method selection, and (c) factor extraction criteria. Factor extraction can be done using principal component analysis (PCA) or principal axis factoring (PAF). PCA was used in this study due to its widespread acceptance and reliability, despite its inability to account for errors in variance measurement. The choice of rotation method is also vital. Direct extraction methods may not provide sufficient interpretability, hence the need for rotation techniques like orthogonal or oblique rotations. However, since the constructs in this study are expected to be correlated, an oblique rotation type, Promax, was preferred over orthogonal types like Varimax. Lastly, determining the optimal number of variables is crucial. While statistical criteria such as Cattell's scree test or the Kaiser criterion are helpful, interpretability should not be overlooked. In this study, a 4-factor solution was chosen over the 3-factor solution suggested by Kaiser's criteria and Cattell's scree test due to its superior interpretability.

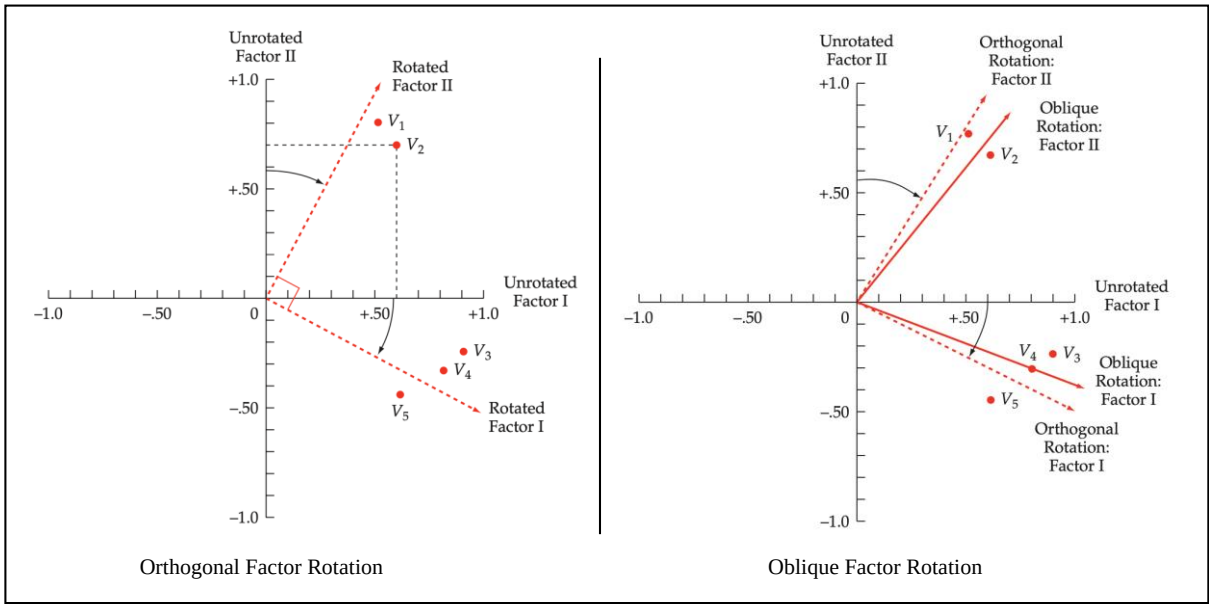

Fig.4- 3 Orthogonal and Oblique Rotation

Sources: Adopt from hair, 2018, p148

4.1.5 Factor Structure

This research began by verifying the suitability of the dataset for Exploratory Factor Analysis (EFA) using the Kaiser-Meyer-Olkin (KMO) measure. The KMO measure, as reported in Table 4-2, was 0.945, suggesting the variables selected for factor analysis were optimal. Additionally, the data passed Bartlett's test of sphericity, signifying its suitability for EFA.

Table 4-2. KMO and Bartlett's Test & Communalities

Kaiser-Meyer-Olkin Measure of Sampling Adequacy.		**0.945**
Bartlett's Test of Sphericity	Approx. Chi-Square	19839.253
	df	4278
	Sig.	**.000**

Communalities

	Initial	Extraction		Initial	Extraction		Initial	Extraction
SC Sen1	1	.599	SPD2	1	.610	SM1	1	.538
SC Sen2	1	.528	SPD3	1	.598	SM2	1	.594
SC Sen3	1	.596	SPD4	1	.670	SM3	1	.559
SC Sen4	1	.555	SPD5	1	.524	SM4	1	.528
SC Sen5	1	.601	SPD6	1	.529	SM5	1	.589
SC Sei1	1	.635	EP1	1	.597	SM6	1	.667
SC Sei2	1	.573	EP2	1	.559	RL1	1	.634
SC Sei3	1	.646	EP3	1	.585	RL2	1	.579
SC Rec1	1	.636	EP4	1	.689	RL3	1	.623
SC Rec2	1	.611	ECC1	1	.602	RL6	1	.614
SC Rec3	1	.592	ECC2	1	.528	ENVP1	1	.567
SC Rec4	1	.577	ECC3	1	.602	ENVP2	1	.576
CC1	1	.541	IGM1	1	.573	ENVP3	1	.635
CC2	1	.593	IGM10	1	.537	OPEP1	1	.607
CC3	1	.609	IGM3	1	.520	OPEP2	1	.570
CC4	1	.599	IGM4	1	.587	OPEP3	1	.545
RE1	1	.599	IGM5	1	.643	OPEP4	1	.621
RE2	1	.592	IGM11	1	.561	OPEP5	1	.554
RE3	1	.518	IGM7	1	.590	OPEP6	1	.552
RE4	1	.534	IGM9	1	.532	ECOP1	1	.535
CU1	1	.551	IR1	1	.593	ECOP2	1	.530
CU2	1	.583	IR2	1	.679	ECOP3	1	.581
CU3	1	.632	IR3	1	.636	ECOP4	1	.589
CU4	1	.626	DM1	1	.582	ECOP5	1	.671
CU5	1	.560	DM2	1	.574	ECOP6	1	**.517**
CU6	1	.673	DM3	1	.519	SOCP1	1	.580
AG1	1	.635	CDI1	1	.537	SOCP2	1	.591
AG2	1	.673	CDI2	1	.649	SOCP3	1	.633
AG3	1	.569	CDI7	1	.573	SOCP4	1	.534
AG5	1	.599	CDI4	1	.578	SOCP5	1	.607
SPD1	1	.562	CDI5	1	.599	SOCP6	1	.604

Extraction Method: Principal Component Analysis.

Source: research results of SPSS 26

Next, we analyzed the commonalities of the component analysis, which measure the interconnectedness of each item, as laid out in Table 4-3. Despite a sample size exceeding 400, the lowest commonality

was 0.517, implying no variable would load significantly on any single component and confirming the importance of all variables for subsequent analysis.

Table 4-3. Sample size and Communalities

Communalities (C)	Variables(V)	Sample size (S)
C ≥ .70	V ≥ 3	S ≥ 100
.70 > C ≥ .40	V ≥ 3	S ≥ 200
C < .40	V ≥ 3	S ≥ 400

Source: Adopt from Hair, 2019, p133 ; Fabrigar &Wegener, 2011

The principal component extraction method was then utilized to establish the number of components to retain. Decisions were guided by eigenvalues with the scree plot, and model hypothesis. As indicated in Figure 4-4, initial criteria suggested four or five components might be enough. However, the fifth component's eigenvalue didn't meet the latent root inclusion criterion of 1.0. The total variance explained by the four retained components was 64.294%, considered satisfactory. Hence, four components were found reasonable and aligned with the model hypotheses.

Total Variance Explained

Factor	Initial Eigenvalues				Extraction Sums of Squared Loadings			Rotation Sums of Squared Loadingsa
	Total	Variance %	Cumulative %	Gap	Total	% of Variance	Cumulative	Total
1	**10.693**	53.464	53.464		10.358	51.789	51.789	9.507
2	**1.59**	7.95	61.414	**9.103**	1.233	6.164	57.953	6.615
3	**1.143**	5.717	67.131	**0.447**	0.75	3.752	61.705	8.268
4	**0.902**	4.51	71.641	**0.241**	0.518	2.589	64.294	6.271
5	0.727	3.636	75.277	0.175				
6	0.491	2.455	77.732	0.236				
7	0.462	2.309	80.041	0.029				
8	0.422	2.109	82.15	0.04				
9	0.407	2.036	84.186	0.015				
10	0.388	1.941	86.127	0.019				
11	0.375	1.875	88.002	0.013				
12	0.342	1.708	89.709	0.033				
13	0.329	1.646	91.356	0.013				
14	0.311	1.554	92.91	0.018				
15	0.285	1.427	94.337	0.026				
16	0.273	1.367	95.704	0.012				
17	0.257	1.283	96.987	0.016				
18	0.227	1.134	98.121	0.03				
19	0.203	1.017	99.138	0.024				
20	0.172	0.862	100	0.031				

Extraction Method: Principal Axis Factoring.

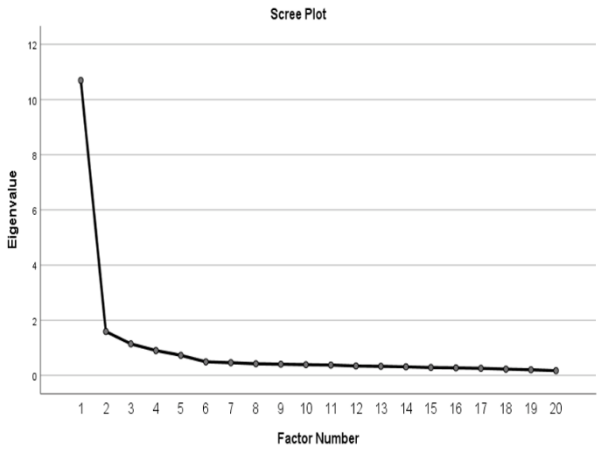

a When factors are correlated, sums of squared loadings cannot be added to obtain a total variance.

Fig.4- 4 Extraction Method: Principal Axis Factoring

Source from research results of SPSS 26

The final EFA factor structure, presented in Table 4-4, consisted of variable loadings for each component. After eliminating items with low loadings on each factor or cross-loadings across factors, EFA produced a four-component rotational pattern matrix, explaining 70.858% of the variance in the data. Since all variables had high factor loadings on their respective components, this signified both

convergent and discriminant validity. Appendix B2 provides the weighting of each component according to the quality criterion's factor weight score, illustrating the practical value of each component. The perfect factor structure attained is suitable for further study.

Table 4-4. Pattern Matrix

	Component (eigenvalue = 1)			Component (eigenvalue = 0,875)			
Variables	F_1	F_2	F_3	F_1	F_2	F_3	F_4
SC Sen			.845				.810
SC Sei			.778				.758
SC Rec			.904				.830
CC		.813				.808	
RE		.766				.765	
CU		.872				.870	
AG		.865				.864	
SPD	.877			.742			
EP	.861			.678			
ECC	.845			.945			
IGM	.891			.740			
IR	.592			.888			
DM	.823			.634			
CDI	.911			.721			
SM	.889			.694			
RL	.850			.760			
ENVP	.590				.953		
OPEP	.571				.759		
ECOP	.561				.725		
SOCP	.519				.799		
Variance accounted for	10.554	1.583	1.143	10.554	1.583	1.143	0.892
The proportion of total variance	52.77	7.915	5.713	52.77	7.915	5.713	4.46
Cumulative proportion	52.770	60.685	66.398	52.770	60.685	66.398	**70.858**

Extraction Method: Principal Component Analysis.

Rotation Method: Promax with Kaiser Normalization.

Source from research results of SPSS 26

4.1.6 Construct Reliability and Validity of EFA

A thorough assessment of the validity and reliability of the factors is required, even if the proposed clean factor structure indicates a promising solution. This is to ensure that the variables being used for measurement are stable and reliable and accurately reflect the target phenomena (Hair et al., 2018).

An assessment of whether it accurately captures all facets of a given concept and experts' opinions on a measurement's suitability, importance, and usefulness make up what is known as **content validity** (Hair et al, 2018; Kline, 2015). The questionnaire's content validity was considered from the start of the design process, tested during the pre-test, and eventually accepted during exploratory research since the final factor structure matches theoretical expectations. (e.g., variables load on their own factors, whereas variables with similar meanings load on the same factor).

When the variables included inside a single factor are strongly connected, as shown by adequate factor loadings, then it has **convergent validity** (Hair et al, 2018; Kline, 2015). Sufficient loadings are determined by sample size, with smaller samples often requiring greater loadings. Loadings larger than 0.40 are recommended for a sample size of 200 (Hari, 2018). Nearly all items have enough loadings (>0.40) on each factor, as seen above in Table 4-4 pattern matrix.

In contrast, **discriminant validity** concerns how unlike and uncorrelated the parts are from one another; it may be thought of as the antipode of convergent validity (Page & Meyer, 2000). Since the rule specifies that variables should relate more strongly to their own factor than any other factor, discriminant validity provides evidence that the factors are conceptually separate (Gaskin, 2012; Hair et al, 2018). Since all variables load uniquely on one component and there are no significant cross-loadings, as seen in the pattern matrix, discriminant validity is ensured. Furthermore, correlations between factors shouldn't be more significant than 0.70(0.7 *0.7 means 49% shared variance), as this value indicates that the two components account for much of the total variation (Gaskin, 2012; Hair et al, 2018). Factor correlations are displayed in *Table 4-5* below, and the highest value that is significantly different from the mean is 0.742. From the previously calculated eigenvalues, it knows that 1 and 2 are SSCM and SSCMP. That's why this research set an eigenvalue of 0.875 as the borderline, as this is acceptable.

Table 4-5. Component Correlation Matrix

Component	1	2	3	4
1	1.000			
2	0.742	1.000		
3	0.562	0.557	1.000	
4	0.535	0.539	0.492	1.000

Extraction method: PCA
Rotation method: Promax with Kaiser Normalisation

Finally, an EFA was carried out to reveal the latent structure of the variables that were being assessed. The results of the EFA showed convergent, discriminant, and content validity, as well as a loading pattern that was optimum and devoid of cross-loading problems. The next stage of research will create

measurement models for the latent constructs that will be integrated into the final structural model and strive to validate the factor structure that has emerged from the exploratory research phase.

4.2. Model Analysis: EFA & High Order Model

After confirming the validity of the sample, this part will first analyse whether the research model is valid, and this result will be used to discuss the research question "RQ2a: What is the relationship between SCR, SSCM and SCDC?". But before that, this part will first verify H1 to H4 through the construction of the second-order model.

4.2.1 Confirmatory Factor Analysis (CFA)

Using CFA after EFA is recommended since, given the same data and number of components, CFA does not always "check" or "confirm" EFA results. As a result, CFA is not only not suggested as a follow-up analysis to EFA but is not even required (if a model is retained in EFA). CFA models created on the basis of EFA findings and tested on the same data may be rejected (Hair et al, 2018; Kline, 2015). This is because, in addition to significant pattern coefficients, EFA indicators often have pretty high secondary pattern coefficients for components that aren't their focus. It may be too cautious about restricting these secondary variables to zero in CFA, as they may account for relatively high amounts of variance. Since the CFA model is more stringent, it is possible that the data will not fit.

Obtaining more information and using the same procedure for a replication sample is the most reliable method for repeating EFA results (Hair, 2018). EFA findings for the same variables may be checked to see if they are consistent when comparing other samples using these approaches (Hair et al, 2018; Kline, 2015). Even if a single-sample analysis is lucky enough to find that the CFA version of an EFA model is intact when fitted to the same data, this cannot be considered replication evidence because it only applies to one research. The reasons for this include (1) the lack of a replication sample and (2) the possibility that both EFA and CFA profited from the same random variation (Hair, 2018). This is more probable if two studies use the same method of estimation, such as maximum likelihood. There is no harm in using EFA instead of CFA if the study area is not yet developed enough to handle the stricter CFA.

Multivariate statistical analysis using CFA verifies the observed variables' factor structure. In contrast to the exploratory factor analysis (EFA), the CFA is used to validate the existence of statistically significant correlations between observable variables and their underlying latent components. Scientists often hypothesise a priori a recommended factor structure based on either theory or empirical evidence and then use confirmatory research methods to statistically verify their findings (Hair et al, 2018; Kline, 2015). Since this is the case, the CFA is concerned with checking if the amount and make-up of components "conform" to what theoretical considerations would predict (Gaskin, 2012). In addition, CFA lays the groundwork for creating structural equations and investigating relationships between

latent variables using SEM by providing the measurement models for the latent variables. As a result, SEM models usually include two intertwined models: (a) the measurement model (originating from the CFA) and (b) the structural path model.

The measurement model defines the link between latent constructs and measurements (Byrne, 2016). Using factor analysis, one may examine the hypothesised factor structure and precisely calculate the loadings of each observable variable on the associated latent construct (Gefen et al., 2000). Because of this, the CFA seeks to verify the expected correlations and creates the final measurement model for the latent components to be used in the structural path model.

The structural path model examines the interdependencies of latent variables in light of the results of the CFA. As a result, this research calculates the hypothesised causal and covariance links between latent constructs and those from the outside world. Similarly, the structural model accounts for the typical measurement error of these parts in its analyses (Byrne, 2016).

The **Maximum-Likelihood (ML)-method** was utilised since it is the gold standard for assessing causal relationships in a structural model and the theoretical factor structure in a measurement model (Hair et al, 2018). By using an iterative strategy to minimise the difference between the estimated and observed correlation matrices, the ML approach maximises the chance that the theoretically calculated correlation is represented by the observed correlation (Hair et al, 2018; Kline, 2015). However, the ML approach has several restrictions. The ML method necessitates multivariate normality as a methodological prerequisite (Hair et al, 2018). It is possible that the acquired data will show signs of moderate to severe univariate and multivariate non-normality. However, several recent simulation studies have shown that if the sample size is large enough (n>200), the ML method and its parameter estimations are usually resilient and stable despite departures from normality (Kline, 2015; Byrne,2016). Consequently, it was appropriate to use the ML method to estimate the measurement and structural models.

4.2.2 Goodness-of-Fit Indices

This section will give evaluation criteria for model fit before providing measurement models. How well a suggested model "fits" an observed or anticipated model is measured by the degree of model fit. The postulated model can explain all significant correlations and covariances between the variables in the dataset, indicating a good match. Conversely, if there is a large discrepancy between the model's anticipated and observed correlation or covariance matrices, the model does not well represent the data (Gaskin, 2012). Several goodness-of-fit indices have been created in the scientific literature; many of these indices are calculable in AMOS 26.

Kline (2015) and Byrne (2016) agree that there is no one "optimal" index because of ongoing discussion and shifting understandings about the appropriateness of specific markers. Several different indices

were used since doing so would allow for a more accurate assessment and reflection of the overall model fit. The standard Chi-Square (2) statistic for model fit can be enhanced by using either absolute or incremental fit indices, as distinguished by researchers (Hair et al, 2018; Chin, 2010). The fit indices used in this study are summarised in Table 4-6, along with their abbreviations and acceptance criteria, which will be addressed in further detail in the following section.

Table 4-6. Summary of Fit Indices Used to Assess Model Fit

This item has been removed due to third party copyright. The unabridged version of the thesis can be viewed at the Lanchester library, Coventry University

Sources: Byrne, 2016, Diamantopoulos & Siguaw, 2000, Hair et al., 2010, Kline, 2015.

Only the **Chi-Square (χ2)** statistic may be used as a measure of model fit (Hair et al., 2018). To show that "the actual and anticipated input matrices are not statistically different" (Hair et al., 2018) and that the suggested model is consistent with the observed one, the 2 p-values must be non-significant ($p > 0.05$). The literature proposes a sample size between 100 and 200 since Chi-Square is sensitive to the number of observations used in the analysis. Hair et al. (2018). Additional indices were used since non-normality and sample size impact the χ2 statistics (Hair et al., 2018, Kline, 2015; Byrne, 2016; Chin, 2010).

By adjusting the **Chi-Square (χ2/df)** for the number of observations in the data, it get the Normed **Chi-Square (χ2)** (Hair et al., 2010). Though there is no agreement on what constitutes a "good" fit, many authors have suggested values anywhere from 1 to 3 (Bollen 1989, p. 278) up to 5 (Arbuckle & Wothke, 1999, p. 399), with values below 1 indicating an overfit of the model (Hair et al., 2018).

Two common absolute fit indices are **the Goodness of Fit Index (GFI)** and the **Adjusted Goodness of Fit Index (AGFI)**. GFI and AGFI values near 1 imply a very good model fit, in contrast to the Chi-Square statistic, which requires a value of 0. As a rule of thumb, a score of 0.9 or above indicates a satisfactory model fit (Hair et al., 2018, Kline, 2015; Byrne, 2016; Chin, 2010). GFI and AGFI, however, are sensitive to sample size. Moreover, their values often deviate from sophisticated models, which might lead to an unfair rejection of the model.

Additionally, the **Root Mean Square Error of Approximation (RMSEA)** is heavily considered a metric of a model misfit. For this reason, the RMSEA is sometimes referred to as an "indicator of poor fit" (Kline, 2015). To get the RMSEA, divide the difference between the proposed and observed models by the number of degrees of freedom. This means that the RMSEA considers a model's parsimony (along with complexity) and does not unfairly punish too simplistic models (Doll et al., 2010). Although RMSEA values between 0.05 and 0.08 are considered acceptable (Hair et al., 2018), values below 0.05 suggest a good fit, and a value of 0 represents the best fit. On the contrary, results with a significance level over 0.1 invalidate the model (Browne & Cudeck, 1992).

On the other hand, incremental fit indices are computed by contrasting the chi-square of a proposed model with that of a "baseline" model, which is more constrained because its variables cannot correlate with one another (Doll et al., 2010). **The Tucker-Lewis Index** (TLI), often referred to as the Non-normed fit index, evaluates a model's goodness of fit relative to a null or baseline model (Diamantopoulos and Siguaw, 2000, Hair et al., 2010). TLI values can be larger than 1, although the values of "normalised" incremental measures like the **Comparative Fit Index** (CFI) and the **Normed Fit Index** (NFI) are between 0 and 1. The authors (Diamantopoulos & Siguaw, 2000) For values greater than 0.95, the quality of a result increases as it gets closer to 1. After analysing several incremental fit indices, Marsh et al. (1996) recommend TLI and CFI. The NFI is widely used for research, although it can be misleading since it is sensitive to sample size (Hair et al., 2018). All three indices were used, but the TLI and CFI were given more weight because of their many advantages over the others, such as their flexibility to deal with small sample numbers and out-of-the-ordinary circumstances (Hair et al., 2010, Lei & Lomax, 2005, Plewa, 2010).

This section will provide a high-level overview and explanation of the various indices employed to assess the adequacy of the models employed in this research when all indices are utilised for the evaluation of one-factor congeneric models refer to the next Section 4.2.3 and Appendix B3.

4.2.3 One-Factor Congeneric Measurement Models

One-factor congeneric models, the most straightforward sort of measurement models, and the whole measurement model used to generate composite scores for latent components are described in this section. These models followed the factor structure of the EFA. This phase of confirmatory research took into account both theoretical and empirical factors to construct well-fitted yet parsimonious measurement models (Kline, 2005) and suitable composites for future analysis. A detailed report of this section will be presented in the Appendix B4. It shows how to calculate composite variables after having established their construct reliability, validity, and measurement invariance for one-factor congeneric measurement models. SEM requires relatively high sample sizes compared to other multivariate procedures to obtain statistically consistent parameter estimates; sample sizes of 200 or more are recommended ((Hair et al., 2018; Lei & Lomax, 2005). In most cases, the sample size should be at least

5:1 as the number of model parameters, preferably 10:1 (Hair et al., 2018, Kline, 2015). This study's sample size of 525 would be more than the authorised 5:1. Each latent construct's composite variable was derived using a one-factor congeneric measurement model.

Using goodness-of-fit and parsimony indices (see Table 4-5), AMOS developed one-factor congeneric measurement models for each individual. The variance of the latent concept was fixed at 1 so that item loadings could be compared. Since a higher number of observations are required for measurement models with nonzero degrees of freedom than free parameters (Kline, 2015). To compute measurement models with only three items, the variance of two residuals was set identically, as is common practice in research based on a pairwise comparison of parameters (e.g., Plewa, 2010). The models were re-specified when the fit indices did not fit well. Most of the re-specification work was removing items with low factor loadings. To guarantee convergent validity, a loading of at least 0.5 is preferred (Hair et al., 2018). Modification indices (MI) for covariances were employed in some instances to find pairs of mistake words that fluctuate together and belong to the same component so that more compact models could be built (Gaskin, 2012; Kline, 2015; Byrne, 2016). Each latent construct's one-factor congeneric measurement model can be found in Appendix B3. The one-factor congeneric models were accepted, and the validity of the measuring instrument was verified because all of the measures loaded highly on their respective factors. Additionally, reliability and validity were tested to guarantee the generation of meaningful composite variables (as reported in Appendix B4).

After one-factor congeneric measurement models were developed and assessed for quality before being integrated into a comprehensive model in which covariances were created across all factors, as shown in Appendix B8. GFI (=0.785) and CFI (=0.834) were close to but did not achieve their acceptable limits, and AGFI (=0.775) showed a poor model fit. As mentioned in section 4.3.2, satisfying all model indicators is not expected because the type of incremental fit indices is easily affected by the sample size and the number of measurement factors. Because the indicators involved in this study are relatively comprehensive and the sample size is sufficient, the incremental fit indices type is slightly acceptable (Hair, 2019). But χ^2/df (=1.675) and RMSEA (=0.360) suggested an excellent model fit, which shows the research model is acceptable. The absolute fit indices are not easy to be affected in the evaluation of the model and are more convincing. Usually, a good model fit for all indices computed for the entire measurement model is not expected to be accomplished, even though a good model fit was obtained for congeneric measurement models (Kline, 2015; Byrne, 2016).

4.2.4 Construct Reliability and Validity of CFA

Similar to the EFA's technique, it is necessary to assess the validity and dependability of the CFA's evolving constructs. Evaluation of the causal model would yield negligible findings if convergent, discriminant, and reliability validity were not established (Gaskin, 2012; Kline, 2015; Byrne, 2016). In order to guarantee that the measurement items "measure what they are intended to measure, but do not

measure what they are not intended to measure," it is necessary to conduct a convergent, discriminant, and content validity evaluation of the latent constructs as mentioned in section 6.3.3. (Kline, 2005, p. 60).

Convergent validity is the relationship between the instruments used to measure the same construct (refer to chapter 6.3.3). Because all factor loadings of the one-factor congeneric measurement models were more than the acceptable threshold of 0.5, the Average Variance Extracted (AVE) from the Mean was utilised to investigate convergent validity further. When the AVE values are more than 0.5, demonstrating good convergent validity (Hair et al., 2018), the measurement items explain more of the variance than the measurement error (Diamantopoulos & Siguaw, 2000). Fornell & Larcker (1981) suggest the range is between 0.35 and 0.5. Since every AVE value satisfies the necessary requirements, all statements are convergently true.

Measurement shows its internal consistency and is directly connected to the lack of random mistakes within the measurement. (Kline, 2015; Byrne, 2016; Zikmund et al., 2003). During a CFA, internal consistency may be evaluated using **Cronbach's alpha** (see section 6.3.3) or **Composite Reliability** (CR) (Hair et al., 2018). Although Cronbach's alpha is a prominent measure for measuring dependability, it does not take into account the importance of any particular indicator in its computations. Composite reliability, which weights the separate indicators depending on their respective loadings and is hence the favoured reliability technique, solves this issue. (Hair et al., 2018, p775). CR values between **0.60 and 0.70** imply a dependable structure (Fornell & Larcker, 1981, Hair et al., 2018, p775). All constructions show a high degree of internal consistency and construct reliability, as demonstrated in Table 6.8 for Construct reliability values, especially considering the limited number of objects employed in each construct. Following is the method for determining construct dependability based on the factor loading of the specific construct:

$$CR = \frac{(\sum \lambda_i)^2}{(\sum \lambda_i)^2 + (\sum \epsilon_i)}$$

Factor loading's size is one crucial consideration. In high convergent validity, factors with high loadings suggest that they converge on a common point, the latent concept. Because a statistically significant loading could still be somewhat weak, particularly with large samples, Chin (1998) recommends that all factor loadings be statistically significant. Generally, standardised loading estimations should be at least .5 and, ideally, at least.7.

Squared Multiple Correlations (SMC) reveal the potential for a hidden variable to account for a given variable's variation (Hair, 2018). The square of factor loading is SMC. In most cases, the squared

multiple correlations between the various variables are displayed in the SEM result. From a measuring standpoint, SMC reflects how effectively an item measures a concept. SMC is also known as item reliability, communality, and extracted variance.

Table 4-7. Convergent validity of constructs

Construction	Item	Parameter Significance Estimation				Factor Loading	Reliability	Composite Reliability	Convergent Validity
		Unstd	S.E.	T-value	P	Std.	SMC	CR	AVE
SCR	AG	1.000				.720	.518	.862	.610
	CU	1.146	.067	17.040	***	.826	.682		
	RE	1.287	.078	16.470	***	.790	.624		
	CC	1.482	.091	16.375	***	.785	.616		
SCDC	SC Sen	1.639	.119	13.781	***	.793	.629	.795	.564
	SC Sei	1.691	.124	13.695	***	.730	.533		
	SC Rec	1.000				.729	.531		
SSCM	CDI	1.111	.045	24.443	***	.854	.729	.942	.645
	DM	1.025	.049	20.918	***	.772	.596		
	IR	.640	.050	12.790	***	.528	.279		
	IGM	1.225	.046	26.832	***	.903	.815		
	ECC	.753	.036	20.674	***	.766	.587		
	EP	.975	.042	23.490	***	.833	.694		
	SPD	.950	.041	23.369	***	.830	.689		
	SM	1.136	.046	24.499	***	.855	.731		
	RL	1.000				.830	.689		
SSCMP	ECOP	1.024	.047	21.781	***	.815	.664	.885	.660
	OPEP	1.012	.044	22.959	***	.850	.723		
	ENVP	.879	.048	18.331	***	.720	.518		
	SOCP	1.000				.856	.733		

Discriminant validity (section 4.2.6) states that if there is a difference between two conceptions, it is because they are conceptually distinct and sufficiently uncorrelated. To validate the results, it was judged necessary to demonstrate discriminant validity between constructs. According to the Fornell & Larcker criterion, discriminant validity is attained when the maximum squared correlation between two constructs, and therefore the squared variance, is less than the Average Variance Extracted, which was previously computed using the AVE score (Fornell & Larcker, 1981; Hair et al., 2018). To demonstrate if the components are unique, the root value of each AVE must be greater than the corresponding values of other related characteristics. Table 6.7 displays the variance and average variance extracted values for each component. Mostly, AVE is greater than the corresponding values of other related characteristics. It is worth noting that collinearity issues stemming from inter-correlations between practice and performance may be the reason for concern in the context of this study, where theoretical considerations and empirical data suggest moderate correlations among constructs (e.g., Li & Liu, 2014; Lee & Rha, 2016). This more significant relationship is expected and appropriate. Therefore, the model has discriminant validity. The discriminant validity of each measurement can be found in Appendix B5.

Table 4-8. Discriminant validity of constructs

	AVE	SSCMP	SSCM	SCDC	SCR
SSCMP	.660	**.812**			
SSCM	.645	.847	**.803**		
SCDC	.564	.727	.676	**.751**	
SCR	.610	.666	.656	.638	**.781**

Note-The square root of AVE is in bold on diagonals; Off diagonals are Pearson correlation of constructs.

4.2.5 Common Method Variance (CMV)

Common Method Variance (CMV) is a potential dataset bias caused by a systematic (external) measurement mistake that impacts the accurate evaluation of the correlations between the components (Chang et al., 2010). Common method variance refers to variation connected with the measuring procedure, as opposed to the structures that the data reflect (Podsakoff et al., 2003). CMV occurs when the bulk of variation can be attributable to a single source (Gaskin, 2012). Researchers believe that CMV may be an issue when data is gathered from the same people at the same time using the same method (such as self-report surveys in an online survey) (Podsakoff & Organ, 1986). Nonetheless, the probability and form of CMV in self-reported data are the subjects of ongoing discussion (Richardson et al., 2009).

The most popular and traditional approach to analysing common method variance is Harman's single-factor test, which determines whether most of the observed variation in the data can be attributable to a single component (Podsakoff et al., 2003). The approach's basic assumption is that if there is a

significant amount of common method bias and that variance is extracted by a single factor and accounts for more than 50% of the variance in the model, then there may be a problem with CMV (Podsakoff et al., 2003). One factor was extracted from the EFA out of 93 total research components (Gaskin,2012; Kline, 2015; Byrne, 2016). The results of the unrotated one-factor solution were analysed to determine if CMV is an issue. According to Harman's single-factor test results, CMV is not a widespread issue. This test shows that only 30.581% of the extracted variation can be attributed to a single component.

Although this method is widely used and seems popular, there are some known limitations. The fact that a one-factor model is unlikely to fit the data leads to the first criticism that it is insensitive (Podsakoff et al., 2003). Additionally, because it just suggests the existence of a CMV and does not statistically control for or partially eliminate the common variance effects, its explanatory value is constrained (Richardson et al., 2009). Therefore, the technique should be applied as a "diagnostic technique" to "evaluate the potential impact of common procedure variance" (Podsakoff et al., 2003, p. 879). Although this study passed the CMV test, to verify the research model more rigorously, this study will conduct an invariance analysis in Section 4.3.3. It justifies how the research model is widely used in the construction supply chain and provides decision-makers in different operational locations with a differentiated view of decision-making to help decision-makers think from a supply chain level.

4.2.6 Measurement Model Invariance

Without measurement model invariance, the development of composite variables would be prone to error. It might hinder effective interpretations, as the underlying component structure does not account for diverse groups (Gaskin,2012; Kline, 2015; Byrne, 2016). Invariance analysis (multi-group path analysis) is utilised to explore both configural and metric invariance since it enables determining if a model's parameter values differ between groups (Kline, 2015). Multi-group path analysis was used to test the CFA's final factor structure by estimating the measurement model for both groups (Byrne, 2016). This research chooses an invariance sample because different types of companies in the supply chain position usually have different operational priorities. This difference has also caused one of the most serious supply chain problems, the bullwhip effect (Lee & Whang, 1997). Although there are differences between companies of different sizes, these differences will narrow as the company grows. In addition, based on the information provided by the data structure in Chapter 3, ‘Architects and consultants (Arc)’ and ‘Contractor (Con)’ satisfy the analysis conditions. The sample size is also very suitable for the analysis. There are no strict sample requirements in the invariance analysis but improving the sample structure can improve the accuracy of the analysis to a certain extent (Byrne, 2016). Therefore, the study will target firm-type differences as the invariance analysis target. The data set was divided into two groups, architects and consultants (Arc) and contractors (Con), using the categorical variable, company type, to check if the factor structure is consistent across industries. Arc (n=203) and Con (n=203) were of equal size, and their replies were not anticipated to vary. Therefore, the firm type was acceptable for the validation of measurement invariance. It is worth noting that the

invariance analysis of this study has two purposes. This part is the invariance analysis of the Item level. Its purpose is to verify whether the measurement items are invariant and do not involve the analysis of decision-making differences. This section will serve as a supplementary analysis of CMV and provide a sufficient basis for the next high-level model analysis.

Configurational invariance denotes that every group has the same number of constituents. A good model fit is obtained by the factor structure "when both groups are examined concurrently and freely" (Gaskin,2012; Kline, 2015; Byrne, 2016). The fit indices for the estimated unconstrained multi-group model are somewhat lower than those for the final measurement model.

Metric invariance ($\Lambda_m = \Lambda_f$) requires comparable factor loadings across groups, as factor loadings reveal the causal influence of observable indicators on a latent concept (Bollen, 1989). For this reason, metric invariance demonstrates that the significance of manifest indicator levels is true across all communities (Vandenberg & Lance, 2000).

Residual variance Invariance ($\Theta_m = \Theta_f$) means that the internal consistency of items in both categories is the same. In contrast, the quality of the items as indicators of the underlying notion is the same for both groups (Cheung & Rensvold, 2002).

The next step is determining if the factor model should be applied to each group type. If the baseline models for each group are distinct, factorial invariance analysis should not be carried out. Alternately, one may impose stringent limits on the model if the baseline model for each group is identical and cannot be rejected in any group. To test for factor loading invariance ($\Lambda_1 = \Lambda_2$), all genders were required to have the same factor loadings. If the factor loading restricted model was acceptable, the unique variances of each item across ARC and Con were bound to be equal ($\Theta_1 = \Theta_2$) if the model was suitable. Last, factor variance must be the same across types ($\Phi_m = \Phi_f$) if both groups share the same factor loadings and item-specific variances. For selecting both factor models, the same analysis approach was utilised. The configural and metric invariance testing of the research model is in Table 4-9. The configural and metric invariance testing of each construct has been detailed in Appendix B9.

Table 4-9. Configural and Metric invariance of the research model

Model (M)	CMIN (χ^2)	DF	P	NFI	NNFI	CFI	RMSEA
Unconstrained	524.017	332	0	0.915	0.962	0.967	0.038
$\Lambda_m = \Lambda_f$	537.817	348	0	0.913	0.964	0.967	0.037
$\Lambda_m = \Lambda_f$; $\Theta_m = \Theta_f$	599.090	392	0	0.903	0.965	0.964	0.036
Complete Invariance	607.958	396	0	0.902	0.965	0.964	0.036

Due to the similarity of the two baseline models for each group, a multi-sample analysis was conducted. First, a multi-sample investigation employing the unconstrained model demonstrated a sufficient baseline model for both ARCs and Con (χ^2((332) = 524.017; NFI =.915; NNFI =.962; CFI =.967; RMSEA =.038). And then, the factor loadings for both groups needed to be the same to test the invariance of factor loadings across the two groups. According to a multiple-sample investigation, this constrained model was good (χ^2 (348) = 537.817; NFI =.913; NNFI =.964; CFI =.967; RMSEA =.037). In addition, the χ^2 difference test between the baseline model and the constrained model was not significant (χ^2 (16) = 13.8, $p > 0.05$), suggesting that factor loadings of the two groups were invariant.

Each item's factor loadings and individual variances were also constrained to be the same for both groups. Based on a multi-sample analysis, this constrained model was satisfactory (χ^2 (392) = 599.090; NFI =.903; NNFI =.965; CFI =.965; RMSEA =.036). Moreover, the χ^2 difference test between the two constrained models was significant (χ^2 (44) = 61.273, $p<0.05$) despite equal NFI, NNFI, CFI, and RMSEA values. This suggested that unique variances of each item were not invariant across ARC and CON. The item error wording may have originated from a diverse supply chain operating environment, difficulties reading the questionnaire or a measurement error. Even though the error terms difference test indicated disparities across groups on the item level, this is acceptable because the invariance of the errors does not affect the process by which the model is interpreted. It is often used as the last bonus procedure of invariance verification（Cheung & Rensvold, 2002）. The invariance of the measurement model is established when there is agreement amongst groups in terms of the relationships between the manifest indicator variables and the latent concept. These results allow composite variables to be derived from factor scores.

4.2.7. Second-Order reflective Construct

This section describes a new method for calculating the formative construct, which was used to measure the four primary factors: supply chain dynamic capacities (SCDC), supply chain resilience (SCR), sustainable supply chain management (SSCM), and supply chain performance (SSCMP). Marsh and Hocevar (1985) state that the second-order CFA may be substituted for the first-order CFA, increasing the model's precision. This will be instantly reflected in the indication of model fit. Therefore, this section will investigate whether or not the variables that comprise them are sufficiently qualified.

Following the procedure outlined in section 4.3.3, one-factor congeneric measurement models for first-order reflective measurement models were initially developed for their calculation. Notably, "the construct indicators can still be assessed individually based on their various contributions to the construct by evaluating their route weights" when first-order constructs are being computed (Cenfetelli & Bassellier, 2009, p. 690). These models were then used in a second step to create the second-order

formative construct, which reflected the first order reflecting structures. Consequently, first- and second-order CFAs were utilised in this investigation. The T value closer to 1 implies that the second-order CFA can replace the first-order CFA, resulting in a more accurate model, as stated by Lai et al. (2010). Appendix B6 displays the four components' first-order correlation and second-order models. And the results have reported in below Table 4-9. The T values for supply chain resilience (SCR) and sustainable supply chain management (SSCM) equity are 0.98 and 0.93, respectively, closer to 1 than 0.98. The T values for supply chain dynamic capabilities (SCDC) and supply chain management performance (SSCMP) are 1.

Table 4-10. Goodness-of-Fit Indexes for Alternative Models (n = 525)

Model	**Chi-sqr(df)**	**Chi-sqr/df**	**GFI**	**AGFI**	**CFI**	**RMSR**	**Target Ration(T)**
Whole first order model	6823.651(4073)	1.675	.785	.775	.883	.036	
SCDC first-order model	51.195(51)	1.004	.984	.975	1.000	.003	
SCDC second-order model	51.195(51)	1.004	.984	.975	1.000	.003	1.000
SCR first-order model	181.508(113)	1.606	.960	.946	.964	.034	
SCR second-order model	183.541(115)	1.596	.960	.947	.964	.034	.989
SSCM first-order model	1198.847(704)	1.703	.900	.883	.935	.037	
SSCM second-order model	1280.026(731)	1.751	.892	.878	.928	.038	.937
SSCMP first-order model	292.049(184)	1.587	.950	.937	.963	.033	
SSCMP second-order model	292.154(186)	1.571	.950	.937	.963	.033	1.000
Whole second-order model	313.774(166)	1.890	.944	.929	.980	.041	

Consequently, the fitness index of second-order CFA for these four structures indicates that their fitness is outstanding, and they have adequate grounds to create the second-order model. Consequently, compared to the first-order model, the simplification of the second-order model has dramatically improved the model fit of the entire research model (The complete data for the second-order model are presented in Appendix B3, B4, B6 and Tables 4-10 below summarize the results of the analysis). In the following study phase, it was incorporated into the structural path model to analyse the causal link between components. This research method is considered the foundation of SEM and will be described in the next section.

Table 4-11. Result of seconder order model (Reflection)

Hypotheses	p-values	Results
$H_{1a\ to\ 1i}$: SPD, EP, ECC, IGM, IR, DM, SM, CDI and RL positively reflect SSCM.	***	Supported
$H_{2a\ to\ 2d}$: ENVP, OPEP, ECOP, SCOP positively reflect SSCMP.	***	Supported
$H_{3a\ to\ 3d}$: CC, RE, CU, AG positively reflect SCR in	***	Supported

$H_{4a\ to\ 4c}$: SEN, SEI, REC positively reflect SCDC	***	Supported

4.3 Post Analysis: Mediation & Invariance

After the second-order model is established, this part will delve into the reasons behind the establishment of the model. Path analysis was performed first. It is the premise of the mediation analysis. Then the research question "RQ2b: how dynamic capability mediates the relationship between SCR and SSCM" is answered through the simple and multiple mediation models. In addition, this study conducts a cross-enterprise analysis of trends in the complex context of supply chains. The findings will answer the research question, "Is the model valid in the Chinese construction supply chain?". It could provide managers with a perspective on how decision-making differentiates across the supply chain and demonstrate the research model's broad applicability.

4.3.1 The Structural Path Model

The structural route model, which explores the causal links between the components, is the second key part of the structural equation model. The structural model, like a regression-analytical method (Schreiber et al., 2006), depicts the interrelationships between the endogenous and exogenous constructs in the proposed model as a sequence of structural equations while accounting for the common measurement error of these constructs (Gefen et al., 2000). The structural path model is provided in Figure 4-5, and its overall model fit is evaluated once the model has been identified and its multivariate assumptions tested. The literature study and preliminary qualitative research served as the basis for developing a conceptual model and testing hypotheses about the interactions between the endogenous and exogenous components using AMOS.

Figure 4-5 depicts the structural route model for hypotheses H_1 through H_4 and the resulting model fit indices. Nonetheless, prior to testing the hypotheses, the overall model fit was evaluated. Using a variety of goodness-of-fit indicators ensures a complete examination and reflection of the model's fit. Despite the fact that the research model is original, the theory supporting the model is derived from a review of the pertinent literature, and the model's application is predicted. The goodness-of-fit indicators, as depicted in Figure 4-5, revealed a reasonable model fit. GFI (.940) and CFI (.977) indicated an outstanding match, while AGFI (.924) and χ^2/df (2.023) also showed a strong match. The RMSEA value (.044) is less than.008, suggesting that the match is good. As a result, the further analysis will continue to evaluate concepts using a solid model. Meanwhile, Unstandardized results show that all four pathways from H1 to H4 are very significant. As the Figure 4-5 show, under standardized, for every 1 standard deviation increase in SCR, SCDC increases by 0.64 standard deviations, and SSCM also increases by 0.37 standard deviations. For every 1 standard deviation increase in SCDC, SSCM increases by 0.46 standard deviations. For each standard deviation added to the SSCM, the SSCMP will increase by 0.86 standard deviations.

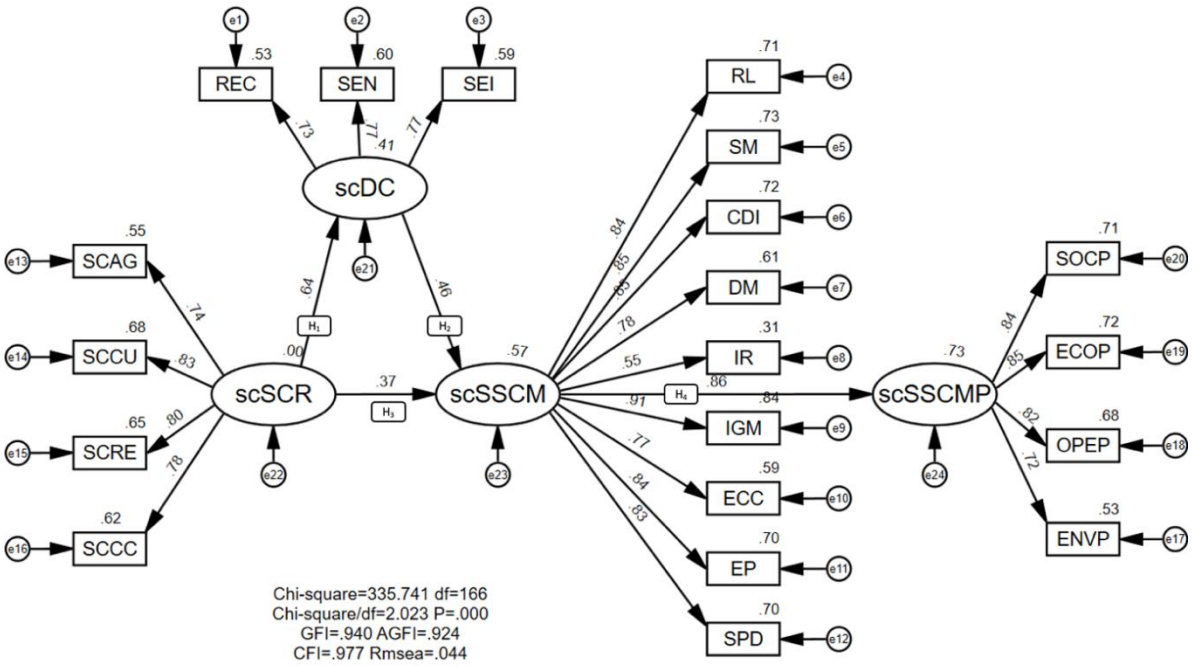

Fig.4- 5 Second order model (Simplification)

The research model statistically validated four primary hypotheses. The result has provided in Table 4-10. The empirical evidence establishes the relationship between supply chain resilience (SCR), sustainable supply chain management (SSCM), supply chain dynamic capabilities (SCDC), and sustainable supply chain management performance (SSCMP) with all practises and capabilities implemented in Chinese construction sectors. This study analyses the construction supply chain and categorises sustainable supply chain management into nine practices, including sustainable product design (SPD), environmental procurement (EP), environmental customer collaboration (ECC), Internal Green Management (IGM), Investment Recovery (IR), Diversity Management (DM), Community Development and Involvement (CDI), Safety Management (SM), and Reverse logistics (RL). Therefore, SSCM will be used to reflect a composite level of the nine practice categories. Based on the research of Sheffi & Rice (2005) and Christopher & Peck (2004), the extensive literature on resiliency is referenced. The practice of the construction industry is interfaced so that the resiliency practice of this study will divide supply chain resilience into four categories such as communication and coordination (CC), resource reconfiguration (RC), creating a supply chain risk management culture (CU) and agility (AG). As well as supply chain dynamic capabilities, it includes supply chain sensing (SEN), supply chain seizing (SEI) and supply chain reconfiguration (REC). As for performance in sustainable management, this study adds operational performance to the ethical triple bottom line (Kumar et al., 2016; Mikalef & Pateli, 2017).

This model's primary finding reveals that SCDC significantly influences the acceptance and deployment of SCR and SSCM by the Chinese construction industry. The results further showed that not only

carrying on supply chain resilience like CC, RE, CU, and AG could enhance the implementation of SSCM. Meanwhile, strong supply chain dynamic capabilities like SEN, SEI, and REC also influence the construction sector to adopt and implement SSCM practices. The statistical results provided by the structural model indicate that well-implemented SSCM procedures can eventually have a favourable effect on the sustainable performance of the supply chain. This conclusion emphasises the importance of these eco-friendly actions and the need to grasp their drivers. Therefore, Section 5.3 will discuss these potential drivers through an in-depth mediation and multi-mediation (Specific Indirect Effect) analysis. And the following parts will explain the results of SEM in detail.

Table 4-12. Result of Structural Path Hypotheses

Hypotheses	Path	Standardised Coefficient (β)	p-values	Results
H_5: SCR positive impact SSCM	SCR->SSCM	.37	***	Supported
H_6: SCR positive impact SCDC	SCR->SCDC	.64	***	Supported
H_7: SCDC positive impact SSCM	SCDC->SCR	.46	***	Supported
H_8: SSCM positive impact SSCMP	SSCM->SSCMP	.86	***	Supported

4.3.1.1 H_5: SCR positive impact SSCM

With a value of 0.37 (p 0.001), SCR has a significant, direct, and favourable effect on SSCM. SSCM was proposed to be developed as a result of the higher level of SCR. The results support the arguments in the previous studies on SCR and SSCM from an empirical aspect (Ivanov, 2020; Moktadir et al., 2020; Levesque, 2012; Fahimnia & Jabbarzadeh, 2016) and in the construction sector in particular (Hawkins, 2004). This study argues that firms may solve sustainability challenges by implementing the practice of supply chain resilience to unexpected shocks. This conclusion can give several advantages to the organisation and supply chain. In terms of operation management, Ivanov (2018, p. 3508) says that "resilient supply chain structure with regard to ripple impact mitigation and sustainability grows." In terms of sustainable management, for an instant, Cui et al. (2022) assert that firms may have a greater influence on the public through swift reactions and good results when disruptive risks exist. Hence, the resilience practice leads to enhanced socially related sustainable management. However, the indirect effects of SCR on SCCM variables are shown in Table 4-11. Such data imply that third parties, such as SCDC, mediated the effects of SCR on SSCM. Given that previous research mainly investigated only direct impacts, such a discovery may be viewed as an original contribution. Moktadir et al. (2020) analysed a comparable relationship in the literature, stating that SCR has a favourable influence on SSCM. SCR and SSCM constructs in their study are, in contrast, more constrained than those in this thesis. Based on their research, this study more fully explains the definitions of SCR and SSCM through second-order models, thereby uncovering potential mediating variables between SCR and SSCM that they may have overlooked.

4.3.1.2 H_6: SCR positive impact SCDC

From the perspective of Chinese construction firms, it was revealed that SCR has a noticeably substantial impact on the expansion of SCDCs (.640). This study provides new information to promote the growth of dynamic capabilities. In contrast to the bulk of statements regarding dynamic capabilities (Eltantawy, 2016b; Chowdhury & Quaddus, 2017), Tondolo & Bitencourt (2014) provide a theory-based basis for this result. They claim that "Dynamic Capabilities are developed through a set of processes that have an effect on organisational resources and capabilities." And Brandon-Jones et al. (2014) also claim that the implementation of supply chain resilience is the process of periodically reallocating resources. Thus, the result of SCDC can be interpreted as the dynamic ability of the enterprise to deal with uncertainty will be subtly improved in the process of the enterprise's efforts to build a resilient supply chain. According to Hong et al. (2018), organisations implementing SCR often have greater supply chain adaptability to environmental changes than conventional businesses. This is congruent with the findings from the third chapter's interviews. And the result is the same as that of Elia et al., (2021) and Moustaghfir (2012) that, the supply chain resilience, as one kind of company culture, needs to be transformed into a sustainable practice through the guidance of a certain capability. In this research, the sustainable practice includes nine sustainable supply chain practices in terms of environment, society and economy.

4.3.1.3 H_7: SCDC positive impact SSCM

Another result of the indirect path is that SCDC significantly impacts the improvement of SSCM. This result has been widely mentioned in the literature (Beske, 2012; Hong et al., 2018). In their discussion of the economic, environmental, and social implications of Industry 4.0, Felsberger et al. (2022) stress that the ordination of dynamic capacities serves as a mediator. Especially, According to Chih et al. (2022), dynamic capabilities are vital to a sustainable construction supply chain. One of the most influential and innovative companies in the field, China Coal Technology & Engineering Group, has implemented the concept of intelligent supply chain construction. In order to create a sustainable and dynamic supply chain management system, it is necessary to combine existing resources with information technology. Teece (2007, p.1332) argues in "Managing complements and 'platforms'" that while the use of scale and scope economies to company boundary decisions may have declined, the significance of specialism to enterprise strategy has grown. Consequently, this dynamic method promotes collaboration and cooperative development in terms of profitability and sustainability across the whole supply chain. In the meanwhile, the focus group for this study has verified its results "BIM is a carrier, a database. Various disciplines can coordinate through a platform to improve the efficiency of our work. For example, energy-saving, capital saving, investment, etc. (F18)" Therefore, dynamic abilities play a crucial role in promoting sustainable construction supply chain management adoption.

One of the expected novel contributions is the empirical examination of the studied mediating roles of SCDC in the relationship between SCR and SSCM (Ivanov, 2020; Moktadir et al., 2020; Levesque, 2012; Fahimnia & Jabbarzadeh,2016). The mediation analysis will be presented in section 4.4.2 in detail.

4.3.1.4 H_8: SSCM positive impact SSCMP

The outcome of SSCM deployment is strengthened SSCMP (.86). Consistent with earlier findings (Esfahbodi et al., 2016, 2017; Hong et al., 2018; Isnaini, 2020; Sessu et al., 2020), This study presents empirical evidence for the favourable association between SSCM practises and SSCMP in the Chinese construction sector. This research shows that the nine SSCM practises, SPD, EP, ECC, IGM, IR, DM, CDI, SM, and RL, can sustain Triple Bottom Line performance. The benefits of implementing these SSCM strategies range from operational objectives at the tactical level that emphasises boosting economic returns to strategic values that take longer for organisations to attain (Kurnia, 2014). Paulraj (2011), for instance, recommends that applying SSCM approaches that enable organisations to maintain leadership positions in the sustainability market is an additional strategy for gaining market share and increasing profits. Adopting SSCM may create strategic advantages that assist businesses in meeting their obligations to society, the environment, and other stakeholders (Hong et al., 2018). Specifically, under China's supply-side reform, the use of SSCM facilitates the removal of highly polluting and energy-inefficient goods through the selection of downstream businesses (Yang, 2016). It may help enterprises to comply with environmental protection rules and improve environmental performance. Consequently, it can speed up the upgrading and transformation the Chinese construction industry inside global value chains.

On the other hand, because the effective deployment of SSCM approaches can result in enhanced corporate performance, this result may motivate enterprises. According to Silvestre (2015), sustainable supply chain management (SSCM) has a low profile in developing countries, which impedes the development of dynamic capabilities and the subsequent improvement of sustainability performance. However, SSCM has a substantial influence on SSCMP from a SCDC View. Enterprises establish continuous improvement performance by cultivating exceptional dynamic capabilities with their supply chain partners, which may also be necessary for sustainable performance in developing countries.

4.3.2 Mediation Analysis

The mediation test will include a simple mediation introduction to second-order models, which will use the mediation test steps that will first go to the method of Baron & Kenny (1986). Although this method is generally recognized, the results obtained by different methods are different (MacKinnon et al., 2002). This work extensively uses mediation techniques, including the coefficient difference approach for secondary verification, to guarantee the robustness of the primary model. In the presence of mediating effects, research remains interested in how dynamic capacity can act as a mediator of resilience and sustainability. Therefore, to further explore the mediating effect of dynamic capabilities, the research

will unravel the limitations of dynamic capabilities as a whole and explore the multiple mediations of three specific dynamic capabilities.

4.3.2.1 Simple mediation

Mediators describe the psychological significance of external physical events (Baron & Kenny, 1986). Scholars distinguish this process as having total, direct, and indirect effects. Following Figure 4-6 shows, (*X*) is an independent variable that affects a dependent variable (*Y*) via one or more potential intervening(mediator) variables. In the Model 1, the total effects are the c' which mean c'= c + a*b. And the direct effect is c, and the indirect effect is a*b.

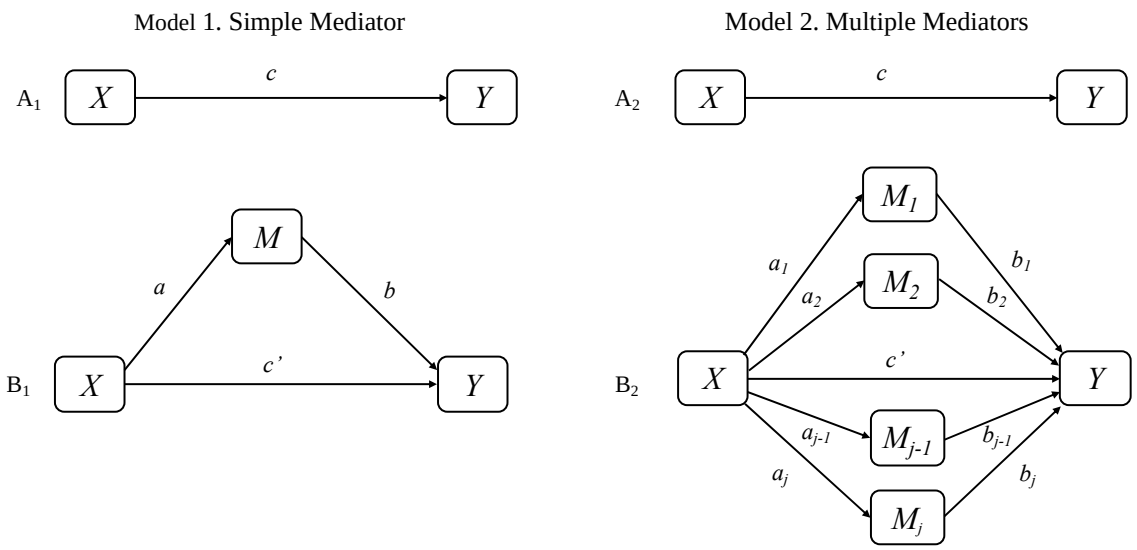

Model 1 illustration of a direct effect. *X* affects *Y*. (B_1) illustration of a mediation design. *X* is hypothesized to exert an indirect effect on *Y* through *M*.

Model 2 illustration of a multiple mediation design with *j* mediators. (A_2) *X* affects *Y*. (B_2) *X* is hypothesized to exert indirect effectson*Y*through*M*1,*M*2,...,*Mj*.

Fig.4- 6 Simple Mediator and Multiple Mediator

Source: adopt Baron & Kenny's (1986)

Although there are alternative methods for evaluating hypotheses on the effects of intervening variables, Baron and Kenny's (1986). causal stages technique is the most recognised. Because it is clear and easily comprehended. Readers and reviewers will have no trouble following this technique's implementation since it is described in a few lines of text. Nonetheless, if researchers evaluate indirect effects instead of inferring their existence from a sequence of trials on its constituent paths, they can demonstrate their existence (Hayes, 2009). The Sobel test, often known as the product of coefficients method, is a well-known inference technique (Sobel, 1982, 1986). The standard error of ab must be determined for this test (see Preacher & Hayes, 2004, for three standard error estimators). If the "true" indirect impact is zero, then the p-value for testing the null hypothesis is the ratio of ab to its standard error based on a normal distribution. Despite its merits, the Sobel test is typically employed in conjunction with the Baron and Kenny method rather than as a replacement for it (Hayes, 2009).

However, the Sobel test is not the best way to gauge the efficacy of the mediation theory. It presupposes that the indirect effect samples are normally distributed. Despite this, skewness and kurtosis are not zero, and *ab* has a non-normal sample distribution (Bollen & Stine, 1990; Stone & Sobel, 1990). Consequently, among the several alternative methods for analysing mediation models, Bootstrapping appears to be the most popular at now (Hayes, 2009). Simulation studies show that bootstrapping is better for examining the impact of confounding factors than the Sobel test and the causal steps approach (MacKinnon et al., 2004; Williams & MacKinnon, 2008). Bootstrapping is already incorporated in various SEM programmes (most fully in Mplus; EQS and AMOS to a lesser extent); and SPSS, SAS, and R users have access to techniques for bootstrapping indirect effects (see e.g., MacKinnon, 2008; Hayes, 2009). The above discussion is the impetus for this research to execute the Bootstrapping text.

Bootstrapping is an iterative method of sampling. It is the re-extracting a sample from a given sample size n. In straightforward words, 1) the Bootstrapping method re-estimates the standard error and confidence interval of the indirect impact, 2) estimates the standard error and non-standard coefficient of the indirect effect, and 3) calculates the significance level of the indirect effect (Z value). Two metrics, **percentile-based** and **bias-corrected**, should be reported by Amos for this method. Hayes (2009) explains that Bootstrapping is repeated *k* times, where *k* is a significant amount. As a rule of thumb, at least 1,000, but preferably 5,000. Using the k estimates, a 95% confidence interval can be calculated for the amount of the indirect effect in the sampled population.

The *k* values of *ab* are sorted from least to most significant to achieve this. **The lower limit of a confidence** interval of confidence level ci is the value of ab at the *k* (.5 - ci/200) th ordinal position (e.g., the 25th place if k = 1000 for a 95% confidence interval) while the **upper bound** is the value at the 1 + *k*(.5 + ci/200)th ordinal position. This programme generates a bootstrap confidence interval *based on percentiles*. A confidence interval can be *bias-corrected* by adjusting the endpoints, or it can be *bias-corrected* and shortened. The analyst can claim with *ci%* certainty that the indirect impact is not zero if zero lies beyond the lower and upper boundaries. By this measure, it rejects the hypothesis that the real indirect impact is zero with a significance level of 100-*ci%*.

Table 4 13. Mediation of The Effect of Supply Chain Resilience on Sustainable Supply Chain Management Through Dynamic Capabilities

				Bootstrapping			
		Production of Coefficients		Percentile 95% CI		BC 95% CI	
	Point Estimate	SE	Z	Lower	Upper	Lower	Upper
Total effects							
SCR->SSCM	1.004	.137	7.328	.768	1.304	.770	1.307
Indirect Effects							

SCR->SSCM	.432	.088	4.909	.283	.632	.319	.912
Direct Effects							
SCR->SSCM	.572	.150	3.813	.650	.902	.293	.650

Note—BC, bias corrected; SCR, supply chain resilience; SSCM, sustainable supply chain management; 5,000 bootstrap samples.

Table 4-12 and Figure 4-5 demonstrate that supply chain resilience directly affects sustainable supply chain management (r=0.847, p=.001). The indirect effects of supply chain resilience on dynamic capabilities (r=0.638, p=.001) and dynamic capabilities on sustainable supply chain management (r=0.676, p=.001) are statistically significant. Moreover, the correlation coefficients revealed a positive and statistically significant association between supply chain resilience and sustainable supply chain management (Standardized direct effect=.37). Additionally, supply chain resilience was favourably and significantly linked with dynamic capabilities (Standardized indirect impact = 0.64,) and dynamic capabilities were positively and significantly connected with sustainable supply chain management (Standardized indirect effect = 0.46). Therefore, the study's primary prerequisites for mediation were validated. To examine the mediated effects of the dependent variable, this study utilised percentile bootstrapping and bias-corrected percentile bootstrapping using 5000 bootstrap samples and a 95% confidence range (Taylor, MacKinnon, & Tein, 2008). The lower and upper borders of the confidence interval were determined to determine whether the indirect effects were statistically significant, as suggested by Preacher and Hayes (2008). As shown in Table 4-13, neither the Percentile-based nor Bias-corrected ranges contain zero, validates the presence of a statistically significant mediating effect for supply chain dynamic capabilities between supply chain resilience and sustainable supply chain management (unstandardized indirect effect =.432). Consequently, H_5 was validated.

This result supports the view that established SCR can be translated into sustainable practice through dynamic capabilities, not only direct capabilities. However, the indirect effect (Z=4.909) is much stronger than the direct effect (Z=3.813). SCR paradigms have proven to be a mild barrier to achieving sustainable development in practice. The urgency of the sustainable development challenge makes these ‘winning solutions’ resilience programmes very attractive, especially those that can be ‘scaled’ quickly without in-depth research to understand the context and interactions of resilience in the supply chain (Reyers et al., 2022). This approach helps address RQ1. However, without consideration of how the context (e.g., micro-foundations, upstream and downstream) and problem ‘scale’ interact, resilience is unlikely to work as expected in the supply chain.

After considering both paths relate to SCR. It found that the impact of SCR (4.909) on SCDC is more significant than one of SSCM (3.813) in this case. These results were not discovered in the prior model, which explored the association between SCR and SSCM from the management perspective of SCDCs. In addition to demonstrating that SCR may be used to increase SCDC, the findings underscore the significance of SCDC as an indirect impact of mediating factors. This finding can be interpreted that in

developing SSCM, not only can SSCM be improved by emphasizing dynamic capabilities, but the procedure of this approach is higher than focusing on SCR alone. It means that dynamic capabilities can be developed through routine or practice. For instance, Kang et al. (2012) revealed that businesses utilizing SSCM had a supply chain with more dynamic adaptability to environmental changes. Similarly, this study concludes that companies operating SCR often have a more dynamic supply chain capacity to adjust to environmental changes than conventional businesses. Recent research illustrates the importance of supply chain resilience from dynamic capabilities (McDougall et al.,2021; Felsberger et al., 2022; Hong et al., 2018; Moustaghfir, 2009).

The establishment of H_5 drives this research to understand how companies can control SCDC to enhance sustainable practices. The following section will build a multi-mediation model. The discussion will be based on Section 2.4 of the literature review, which classifies supply chain SCDCs as SEN, SEI, and REC. It will assist the organization in developing a specific capability in a targeted manner, allowing for rapid progress. The study also examined the differences between the three sets of abilities to refine the multiple mediation model further. These will be discussed in detail in the next section.

4.3.2.2 Multi-mediation

For the purpose of assessing mediation in SEMs, the Specific Indirect Effect (SIE) is the most important effect type (Brown, 1997). To determine the specific indirect effect, it look at how much of the overall indirect effect can be attributed to a single mediating factor (Fox, 1980). The standard error for a given indirect effect may be easily calculated by taking the product of the route estimations that establish that effect, and then applying any of a number of different formulas. The other two groups, causal steps and coefficient differences, are beneficial for analysing a single mediator but have limited utility for more complex models with several mediators (Holbert & Stephenson, 2003). Complex models like this (e.g., multiple mediator) are typical of structural equation models used in mass communication (Dillard, 2002).

The second model illustrates multiple mediation by *j* mediation. As seen in Figure 4-6, A_2 represents the total effect of *X* on *Y*, which is represented by the path *c*. And B_2 illustrates the direct effect of *X* on *Y* (through route *c'*) and the indirect effect via the *j* mediators. Specific indirect impact mediator j is defined as the product of the two **unstandardized paths** connecting *X* and *Y* via that mediator (Brown, 1997; Fox, 1985). a_1b_1 measures, for instance, the precise indirect influence of *X* on *Y* via M_1. The total indirect effect of *X* on *Y* is the sum of the specific indirect effects, $\sum_i(a_1b_1)$, where $i = 1$ to *j*, and the total effect of *X* on *Y* is the sum of the direct effect and the *j* particular indirect effects: $c = c' + \sum_i(a_1b_1)$, where $i = 1$ to *j*. It may also get the total indirect effect by subtracting c from c'.

The following arguments support the specification and testing of a single multiple mediation model instead of several simple mediation models (Preacher & Hayes, 2008). First, it is straightforward to

identify the predictors of a total effect, since determining the total indirect effect of *X* on *Y* is comparable to doing a regression analysis with many variables. If an effect (in this case mediation, such as SEI) is identified, it is possible to conclude that the j-factor set mediates the link between *X* and *Y*. Second, it is possible to determine, contingent upon the existence of additional mediators, the extent to which *M* variables mediate the *X*->*Y* effect. Thirdly, when several possible mediators are evaluated in a multiple mediation model, the likelihood of parameter bias due to missing variables is reduced (e.g., REC, SEN). In contrast, when several simple mediation hypotheses are independently examined using a simple mediator model, these unique models may be subject to the omitted variable problem, which can lead to biased parameter estimates (Judd & Kenny, 1981). Fourthly, including many mediators in a single model enables the researcher to evaluate the relative magnitudes of indirect effects associated with each mediator. In other words, incorporating many mediators into a single model is one way to evaluate competing concepts inside a single model. Comparing hypotheses is a reliable scientific method.

Even though the indirect effect estimated by the majority of computer programmes is the total indirect effect (Brown, 1997). Conventional SEM software provides easy access to all the data required to perform the Mackinnon (2008) distribution of products test (Holbert & Stephenson, 2003). Researchers interested in this relationship may easily get the MacKinnon et al. distribution of products formula, which is the most accurate product of coefficients equation for verifying the presence of a mediator (the detail explain can see Brown, 1997). In general, the multi-mediation test assesses the proportional explanation of mediation by comparing the proportion of specific indirect effects to indirect effects as a whole. Thus, mediation may be regarded as the amount or level of mediation in a complex model (Brown, 1997).

Contrasting indirect effects in Multiple Mediator Models: Sometimes, it is required to test the assumption that the magnitudes of two indirect effects are equal. For instance, it may be beneficial to test competing theories on the mechanism by which attitudes impact behaviour by incorporating two mediators into a single model and then comparing the intensities of the two indirect effects to see which theory merits more credence (Preacher & Hayes, 2008). Occasionally, more subtle contrasts may be necessary. It may be essential to test the hypothesis that the magnitude of one indirect effect between the same set of independent and dependent variables differs from the average size of two additional indirect effects. Notably, contrasts do not compare indirect effects per se but rather specific indirect effects – the unique capacity of each mediator to explain the effect of *X* on *Y* (Preacher & Hayes, 2008). As the mediators are uncorrelated, contrasts primarily represent comparisons of indirect effects.

The equation for the product of coefficients is another important argument for employing multiple mediator models. It is mostly due to the fact that all mediators of the same *X*->*Y* effect are assessed using the metric of the dependent variable (MacKinnon, 2008). To see why this is the case, one must first recognise that every regression coefficient can be expressed as a function of a term involving both

correlations and the scales (standard deviations, *SDs*) of the two variables in issue. In the case of a single mediator (M_1) in a two-mediator scenario, and in accordance with the following Equations 1, 2, and 3: (Cohen, Cohen, West & Aiken, 2003).

$$f_c = a_1 b_1 - a_2 b_2 \tag{1}$$

$$a_1 = r_{XM_1} \frac{SD_{M_1}}{SD_X} \tag{2}$$

$$b_1 = \frac{(r_{XM_2} r_{M_1M_2} - r_{XM_1}) r_{YX} + (1 - r_{XM_2}^2) r_{YM} + (r_{XM_1} r_{XM_2} - r_{M_1M_2}) r_{YM_2}}{1 - r_{XM_1}^2 - r_{XM_2}^2 - r_{M_1M_2}^2 + 2 r_{XM_1} r_{XM_2} r_{M_1M_2}} \left(\frac{SD_Y}{SD_{M_1}} \right) \tag{3}$$

SD_{M1} cancels out when a_1 and b_1 are multiplied, leaving a result independent of M_1's metric. This discovery justifies comparing several indirect effects between the same independent and dependent variables. The product-of-coefficients and bootstrapping procedures may be used to test hypotheses regarding contrasts, just as they can be used to test hypotheses regarding total and particular indirect effects (In more detail about the delta method can see Preacher & Hayes, 2008). As with specific and total indirect effects, the square root of this variance represents the contrast's standard error (SE), provided the contrast is normally distributed. It may thus be used to test hypotheses or develop *CIs*. Notably, these tests imply the sample distribution of the indirect effect (or their differences, in the case of pairwise comparisons) is normal, which is not required for proper inference when bootstrapping is applied (Preacher & Hayes, 2008). As needed by the causal step's technique, they also indicate that this interpretation of the mediation study places no emphasis on the statistical importance of the a and b routes. Instead, practically all of the attention is placed on the direction and magnitude of indirect impacts.

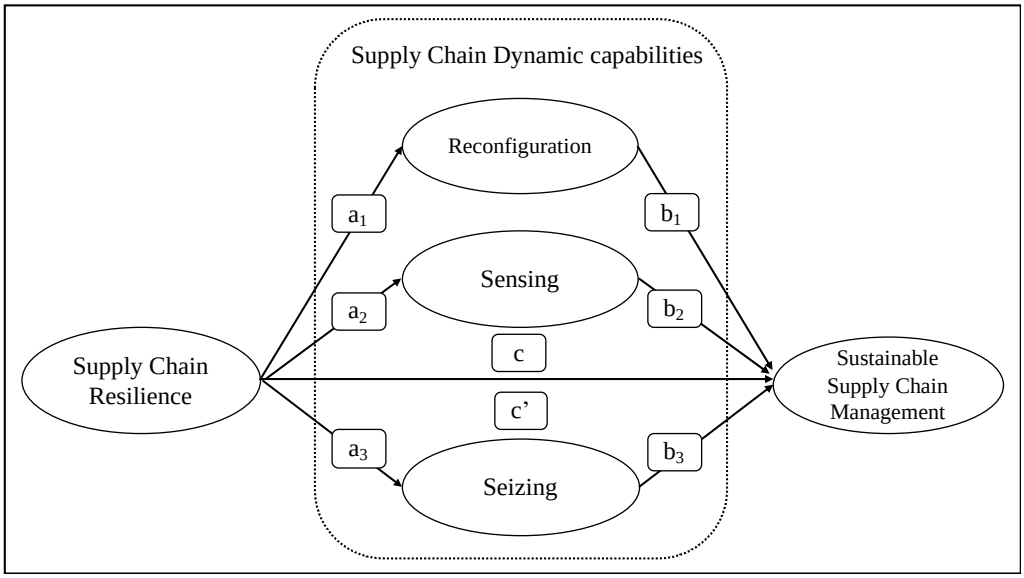

Fig.4- 7 Multiple Mediator Model of Supply Chain Dynamic Capabilities

Table 4-14. Multi-Mediation of The Effect of Supply Chain Resilience on Sustainable Supply Chain Management Through Dynamic Capabilities of Reconfiguration, Sense, And Seize

				Bootstrapping			
		Production of Coefficients		Percentile 95% CI		BC 95% CI	
	Point Estimate	SE	Z	Lower	Upper	Lower	Upper
Indirect effects							
REC	0.070	0.041	1.707	-0.013	0.150	-0.004	0.156
SEN	0.030	0.049	0.612	-0.076	0.113	-0.073	0.115
SEI	0.145	0.039	3.718	0.068	0.222	0.075	0.230
Total	0.245	0.063	3.889	0.098	0.352	0.121	0.367
Contrasts							
REC - SEN	0.040	0.071	0.563	-0.089	0.194	-0.087	0.194
SEN - SEI	-0.115	0.061	-1.885	-0.245	-0.004	-0.247	-0.006
SEI - REC	0.074	0.063	1.175	-0.050	0.197	-0.049	0.198

Note—BC, bias corrected; REC, reconfiguration; SEN, sensing; SEI, seizing; 5,000 bootstrap samples.

In **multiple mediation models**, this research addresses not only the total indirect impact of *X* on *Y*, but also particular indirect impacts. a_1b_1 =.070 (through REC), a_2b_2 =.030 (via SEN), and a_3b_3 =.145 (via SEN) are the specific indirect effects (through SEI). The SEs and critical ratios for these effects are listed in Table 4-14. Among the possible mediators analysed, it is obvious that the SEI (*Z* = 3,718 > 1,96) is an important mediator. Standard methods exist for calculating confidence intervals for each indirect impact. Table 4-14 provides estimates and 95% confidence intervals (percentile and BC) The SEI is the sole significant mediator between resilience and sustainability, according to the results of the product of coefficients strategy.

As the pervious discussion about **Contrasting indirect effects in Multiple Mediator Models**. This study discovered that resilience's specific indirect effect on sustainability via REC was not substantially different from zero, but resilience's specific indirect effect via SEI was statistically significant. Considering the potential importance of the potential differences between these two indirect impacts. A 95% CI for the contrast is therefore {-.050, .197}. Although one indirect impact is considerably different from zero and the other is not, it is impossible to tell which is which since zero is included in the interval. The same is true for SEN. When one of the contrast's particular indirect effects is close to zero, a contradiction may appear. (Preacher & Hayes, 2008). The contrasting results also have been showed in the Table 4-12. The total and direct effects of resilience on sustainability are 1.004 and .572 respectively. It can be found in the Table 4-11. A point estimate of.245 and a 95% percentile bootstrap CI of.068 to.222 is provided for the overall indirect impact via the three mediators, which is calculated by subtracting the total from the direct effect. It is argued that resilience has an indirect influence on sustainability that is distinct from its total impact. Both the *a* and *b* routes may be explained by the idea that improvement in resilience leads to improvements in capacity to master the REC, SEN, and SEI aspects, hence improving sustainability. In analysing the indirect effects, this research finds that only

SEI mediates the relationship between the two variables (95% CI does not include zero). Neither REC nor SEN add to the indirect impact beyond what is already present from SEI. Comparing the indirect effects' pairwise differences reveals that the SEI's indirect impact is greater than the SEN's, with a Percentile 95% CI of -245 to -004.

This part will focus on contrasting indirect effects, as described in the prior section on **Contrasting Indirect Effects in Multiple Mediator Models**. This investigation discovered that resilience's indirect effect on sustainability via REC was not substantially different from zero, whereas its indirect effect via SEI was sizable. Finding out if there is a notable difference between these two indirect effects is important. Thus, the 95% confidence range for the difference is -0.050 to 1.97. Because zero is contained inside the interval, it is impossible to distinguish between the magnitudes of the two indirect effects, even though one is significantly different from zero and the other is not. Such seeming conflicts may occur if one of the compared indirect effects is insufficiently remote from zero (Preacher & Hayes, 2008). Comparing indirect effects pairwise indicates that the particular indirect impact via SEI is bigger than the specific indirect impact via SEN, with a 95% confidence range ranging from -0.245 to -.004. The contrasting results also have been showed in the Table 4-13. The total and direct effects of resilience on sustainability are 1.004 and .572 respectively. It can be found in the Table 4-12. With a point estimate of 0.245 and a 95% bootstrap confidence range of 0.065 to 0.222, the total indirect effect via the three mediators is the difference between the total and direct impacts. It might be argued that resilience indirectly influences sustainability, distinct from its total impact. Both the a and b routes may be explained by the idea that improvement in resilience leads to improvements in the capacity to master the REC, SEN, and SEI aspects and hence to improved sustainability. In analysing the specific indirect effects, this research finds that only SEI mediates the relationship between the two variables (95% *CI* does not include zero).

Even though the dynamic capability is an essential mediating component, the roles of SEN and REC in the construction sector are obscure. This research defines SEI as a company's capacity to make timely, reasonable choices (Tecce, 2007; Pavlou & El Sawy, 2011; Sandberg, 2021). This result suggests that the construction industry is more concerned with the capacity to make quick choices than with the collecting of information and the rebuilding of resources. According to Vieira et al. (2011), the construction industry often chooses to develop operations based on a stable and error-free choice since the cost of trial and error is too expensive, especially after project completion. Such assertions are congruent with this study's focus group findings (F20). Therefore, this study might give substantial support for this assertion. In the preceding section on dynamic capabilities, "Managing Complements and 'Platforms'" also reflects seizing capacities (Teece, 2007, p1332). In addition, research by Laseter & Gillis (2012) demonstrated the significance of SEI in the construction industry. The mediation analysis summary results are in the following Table 4-15.

Table 4-15. Result of mediation analysis

Hypotheses	Path	p-values	Results
H_9: SCDC mediate the relationship between SCR and SSCM	SCR->SSCM	***	Supported
H_{9a}: SEI mediate the relationship between SCR and SSCM	SCR->SSCM	***	Supported
H_{9b}: REC mediate the relationship between SCR and SSCM	SCR->SSCM	***	Rejected
H_{9c}: SEN mediate the relationship between SCR and SSCM	SCR->SSCM	***	Rejected

4.3.3 Invariance Analysis (Multi-Group Moderation Analysis)

Due to the use of a questionnaire in the study, it was required to determine whether or not all respondents had the same interpretation of the survey topics. Consequently, measuring equivalence (invariance) within a sample population is crucial (Deng et al., 2008). On the other hand, if top or middle management can compare the resiliency and sustainability of the enterprise's supply chain practices to their relative performance, they may be able to identify areas of low performance, diagnose the nature and cause of the issue, and decide to correct the situation. Doing cross-enterprise research inside a supply chain presents several challenges. For example, while designing cross-enterprise studies to evaluate performance, Researchers and practitioners must determine if enterprise performance is measured similarly across cross-enterprise types in the supply chain. Evaluation and diagnostic tools that give equal measurement across corporate types benefit businesses that wish to exploit technology across enterprise types (Doll & Deng, 2003).

This section aims to learn how different participants in the supply chain see the outcomes and procedures of resilient and sustainable practices. The construction industry was chosen partly because of its layered and repeatable nature throughout the supply chain. Sorting data support this research to compare contractor (CON) and designer (ARC) perspectives. Therefore, the main survey consisted of two sample groups. It will verify the invariance of the research model on CON and ACR, and the difference will provide unique insights into resilience and sustainable strategies. Multi-group comparison framework is shown in Figure 4-8.

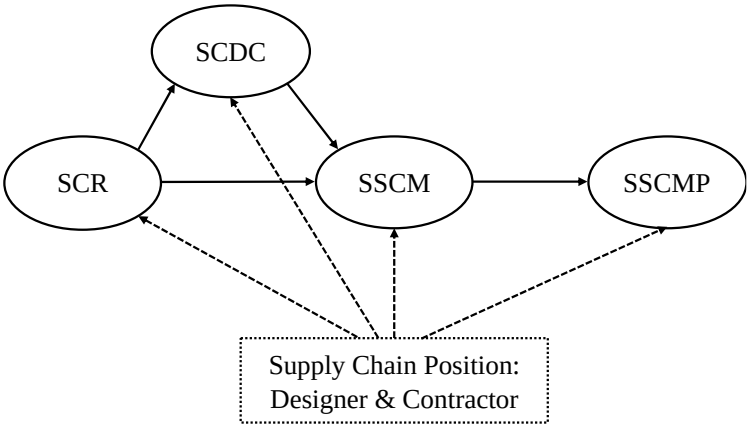

Fig.4- 8 Multi-group Comparison Framework

6.3.3.1 Design of invariance analysis

The significance of multigroup analysis in this study stems from the fact that sustainable supply chain management necessitates comparison studies of both the resilience creation process and the post-implementation performance. The development process is very context-dependent and intricate. Because the management development process involved dynamically behavioural observations processes (e.g., user participation, stages, and methods) and subjective decision-making processes (e.g., local policy and company development stages) that may have different meanings across the supply chain. Therefore, practise studies may be tricky, and the interpretation of data may not always be clear. Whether similarities or differences are genuine is a crucial unanswered question in multi-business study (Barksdale & Anderson, 1982). Standardized instruments must enable comparable (invariant) measurement throughout the enterprise (identical true scores) if cross-enterprise are to have significant significance. According to Drasgow and Kanfer (1985), making meaningful comparisons between groups' observed scores is impossible if those groups are measured using distinct scales.

There have been a number of proposed methods for evaluating factorial invariance. Analysis of the unconstrained model's factor parameters is advised by Van de Vijver & Harsveld (1994), who found that the parameters with the largest between-group variations were not invariant. It was suggested by Marsh & Hocevar (1985) to evaluate modification indices in the fully constrained model, with high modification indices of related items being read as evidence of non-invariance. However, the method proposed by Byrne (2016) has gained the greatest traction and been used by researchers everywhere (Cheung & Rensvold, 2000; Lai & Li, 2005) because of its robustness and justifiability. The chi-square (2) and fit statistics of an unrestricted and several limited measurement models are computed and compared using confirmatory factor analysis (CFA). The constrained models are estimated under the condition that one or more specified factor parameters have the same value for both groups, while the unconstrained model is computed without such constraints.

Based on the method of Byrne et al., the initial step is to determine if the unconstrained (baseline) model fits the statistical analysis in each group ($\Lambda_{form}^{(1)} = \Lambda_{form}^{(2)}$). If not, the variability analysis cannot be conducted. If the model satisfies the fundamental requirements of invariance analysis, stringent restrictions can be gradually put on it. First test model is measurement weight (factor loadings) were limited to be identical across groups to test for item comprehension invariance ($\Lambda_x^{(1)} = \Lambda_x^{(2)}$). If the measurement weight restricted model was satisfactory, the measurement residue (unique variance) of each item was limited to be the same across groups in order to test for statistical method invariance ($\Theta_{\mathrm{ii}}^{(1)} = \Theta_{\mathrm{ii}}^{(2)}$). If factor loadings and individual variances of each item were also same across the two groups, then factor variance should be the same. Examine the model's variance thereafter. To test for conception model invariance in this survey, the third test model is structural covariance, which was limited to be equal across groups based on the previous stage. ($\phi_{ii}^{(1)} = \phi_{ii}^{(2)}$). If structure covariance were restricted, then the structure mean (unique variance) of each construction was bound to be identical across groups ($\kappa_i^{(1)} = \kappa_i^{(2)}$). Lastly, if factor and construction variances were the same for both groups, the invariance of path coefficients was limited to be the same for both groups. If the route coefficients are acceptable, this study's variance was limited to be equal across all variables ($\beta_{ij}^{(1)} = \beta_{ij}^{(2)}$). After identifying invariant items, researchers can either drop them from the study, keep them if reasons can be made to support their partial factorial invariance on findings, or use the variance as a relevant source of data regarding differences across groups (Lai & Li, 2005). Figure 4-9 is a flowchart showing the order of various invariance tests.

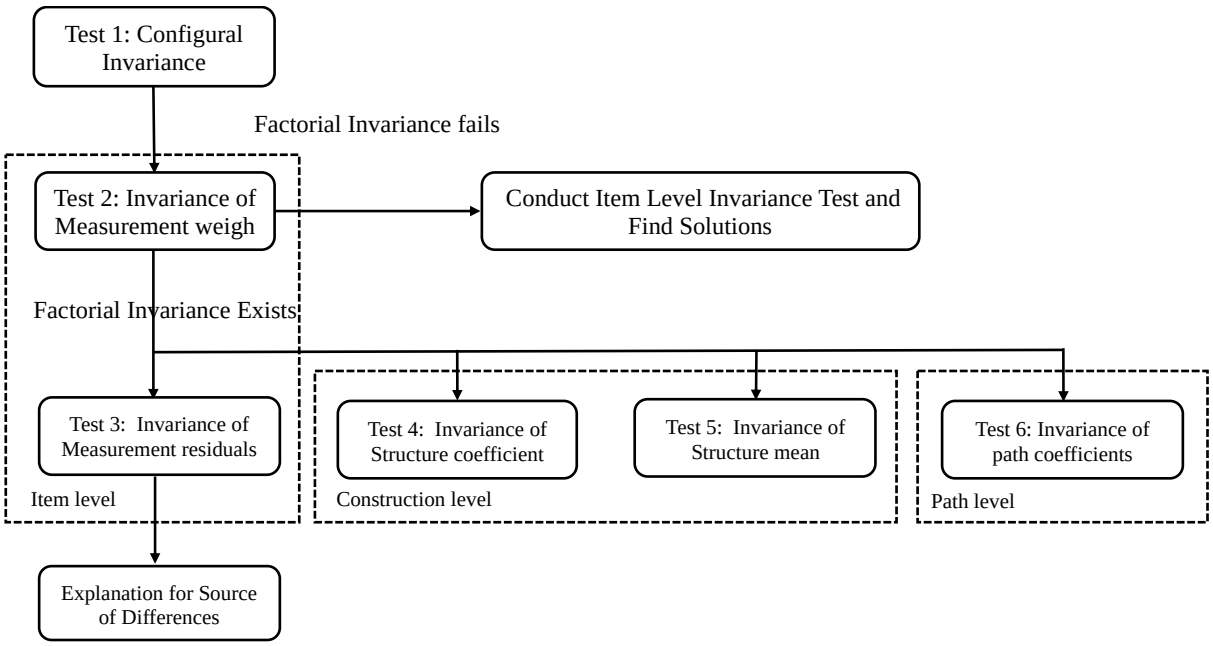

Fig.4- 9 Flowchart of measurement invariance tests

Source: adapted from Lai & Li (2005)

It is possible to determine greater degrees of measurement equivalence or invariance by examining the notion's covariance matrices, error terms, and latent variable correlations using a factorial invariance analysis. Comparable to factorial invariance analysis, Covariance matrices, error terms, and variable correlations all play a role in the validity of these between-group tests. Based on these techniques, the source of invariance in the SEM may be divided into three categories: the factor level, the construction level, and the route level.

Item level means that the questions in this questionnaire are not different in the two groups being compared. To ensure the rigour of this conclusion, research needs to determine whether there is a statistical error in the data collection, so residual congruence of the measurement factors is worth considering. In general, residual congruence is one of the most complex tests to pass in an entire multigroup comparison model. It is worth noticing that the measurement error here is different from the CMV of Section 4.2.5. The residual congruence only includes the two groups (Arc & Con) that need to be tested, which is more accurate for the measurement results. The previous CMV test included the entire data (e.g., all types of companies in the supply chain).

Next is the test of the **structure level**, that is, the congruence of the mean, and the congruence of the Construction weight, although the Amos software has the congruence of the construction intercept and the residual. Because the structural factors are composed of the measurement factors, the residual congruence of the measurement factors can no longer be statistically inaccurate because of this study. Secondly, the congruence of the intercepts is less meaningful. It only means that the two construction factors can be parallel and lack relative practical significance. Therefore, to simplify the measurement process, this study will only perform congruence of construction weight and mean on the construction factor test.

Under the condition that the measurement factor and the structure factor are congruent, the study will conduct a final round of testing the congruence of the **path level**. The results of this step are diverse. Research expectation is naturally congruent, meaning that research models are universal at two important positions(types) in the construction supply chain. The results of differentiation are also expected and highly explanatory. The difference in structural paths will reveal the differences in management priorities of enterprises in different supply chain positions, which may be the "decoupling point" in the sustainable supply chain. Table 4-16 provides specifics on these six invariance tests.

Table 4-16. Tests for measurement invariance

Test		Null hypothesis (H_0):	Test statistics	If test statistic significant (reject H_0), then	If test statistics (fail to reject H0), then
1	Invariance of Unconstrained	For two group: $\Lambda_{form}^{(1)} = \Lambda_{form}^{(2)}$	X_{uncon}^2, CFI, TLI other fit indices	Stop. Inadequate baseline model	Go to test 2
2	Invariance of Measurement weigh	For all *i*, *j* in the model of two group: $\Lambda_x^{(1)} = \Lambda_x^{(2)}$	$\Delta\chi^2 = \chi_{con}^2 - \chi_{uncon}^2$, changes in other fit indices	Factorial invariance fails, conduct construct and item level tests and find solutions.	Invariance exists
3	Invariance of random Measurement residuals	For all *i* item in the model of two groups: $\Theta_{ii}^{(1)} = \Theta_{ii}^{(2)}$	$\Delta\chi^2 = \chi_{con}^2 - \chi_{uncon}^2$, changes in other fit indices	Theta–delta invariance fails. Conduct item level test to find out significant items and explain the sources of difference	Go to test 3,4,5,6
4	Invariance of structure covariance	For all the latent factors *i* in each of the two group: $\phi_{ii}^{(1)} = \phi_{ii}^{(2)}$	$\Delta\chi^2 = \chi_{con}^2 - \chi_{uncon}^2$, changes in other fit indices	Latent fact, invariance fails. Conduct factor level test to find out significant factor and explain the sources of difference	
5	Invariance of latent mean of Structure mean	For each laten factors *i* in each of the two group: $\kappa_i^{(1)} = \kappa_i^{(2)}$	$\Delta\chi^2 = \chi_{con}^2 - \chi_{uncon}^2$, changes in other fit indices	Latent factor mean invariance fails. Explain the sources of difference	
6	Invariance of path coefficients	For each the existing latent factors relationship: $i,j\ \beta_{ij}^{(1)} = \beta_{ij}^{(2)}$	$\Delta\chi^2 = \chi_{con}^2 - \chi_{uncon}^2$, changes in other fit indices	Path coefficients invariance fails. Explain significant relationships	

Source: adapted from Lai & Li (2005)

6.3.3.2 Results of invariance analyses

Invariance analyses (Test 1)

Invariance analyses were performed once model applicability was confirmed to examine how different types of businesses affected the model. The data from each group should match the model well if Arc and Con utilise the same pattern of items to measure the same construct, thus a configural invariance test was performed to ensure this. If they don't, configural non-invariance exists, and additional invariance studies aren't necessary. Findings from the configural invariance investigation, presented in Section 4.3.6 show that the χ^2 and fit indices for each kind of business group are sufficient, proving the construct's configural invariance.

Item level (Test 2 & 3)

In the second phase, a factorial study was conducted to assess if Arc and Con interpret the sustainable construct similarly. Observed scores from the groups could not be directly comparable if business type affected the measurement equivalence of the concept. In such a case, it is necessary to determine the observed items responsible for the non-invariance. Perhaps the diverse location in the supply chain is the reason of the distinct decision-making style. In doing such a factorial invariance study, a baseline unconstrained model was first built, followed by a model with all constraints applied. To evaluate the two models' side by side, it calculated there in $\Delta\chi^2$ and Δdf and fit statistics (in this case, NNFI, CFI, and RMSEA). Section 4.3.6 concludes that the unconstrained and constrained models are invariant since there is no statistically significant difference between the changes in $\Delta\chi^2$ and Δdf *for* firm type and the fit statistics of the two models.

Construction level (Test 4 & 5)

A latent component variables invariance test was then performed to determine whether or not the variance of the construct between latent variables was similar across the two samples. Table 4-17 shows only SSCM was determined to exhibit non-invariant covariance. It is assumed that differences in SCDC, SCR, and SSCMP are not considerably different. However sustainable management practises in Acr and Con in the building supply chain differ. Depending on the enterprise's location in the supply chain, this may result from varying sustainable management strategies. Similar findings were reached based on the invariance test for the mean of the latent component. According to the data shown in Table 4-17, differences in four aspects are not statistically different.

Table 4-17. Result of covariance and mean invariance analysis for the type of company

Model (M)	CMIN (χ^2)	df	$\Delta\chi2$	Δdf	TLI	CFI	RMSEA
SCDC							

$\phi_{ii}^{(1)} = \phi_{ii}^{(2)}$;	146.089	129	8.478	10	0.978	0.979	0.018
$\phi_{ii}^{(1)} = \phi_{ii}^{(2)}$; $\kappa_i^{(1)} = \kappa_i^{(2)}$;	146.089	129	15.679	15	0.978	0.979	0.018
SCR							
$\phi_{ii}^{(1)} = \phi_{ii}^{(2)}$;	265.761	204	4.145	6	0.946	0.948	0.027
$\phi_{ii}^{(1)} = \phi_{ii}^{(2)}$; $\kappa_i^{(1)} = \kappa_i^{(2)}$;	265.761	204	5.408	12	0.946	0.948	0.027
SSCM							
$\phi_{ii}^{(1)} = \phi_{ii}^{(2)}$;	2485.757	1686	63.155*	45	0.869	0.872	0.034
$\phi_{ii}^{(1)} = \phi_{ii}^{(2)}$; $\kappa_i^{(1)} = \kappa_i^{(2)}$;	2485.757	1686	39.715	42	0.869	0.872	0.034
SSCMP							
$\phi_{ii}^{(1)} = \phi_{ii}^{(2)}$;	564.102	374	13.777	10	0.917	0.918	0.041
$\phi_{ii}^{(1)} = \phi_{ii}^{(2)}$; $\kappa_i^{(1)} = \kappa_i^{(2)}$;	564.102	374	13.772	20	0.917	0.918	0.041

Note. *P<0.01; **P<0.05

Path level (Test 6)

The last invariance test on coefficient invariance was conducted to evaluate if the kind of firm had a distinct association with certain variables in the research model. Table 4-16 depicts the hypothesised processes involving the complete system of variables and the defined structure for the interactions between the latent variables. Table 4-18 displays the standardised path coefficients for the universal and group-specific models. Figure 4-11 summarises the important routes for the group-specific model in the two samples. Except for one, all individual pathways in the universal model were significant in the predicted direction. Only p4(SSCM-SSCMP) was discovered to have coefficient invariance for two groups. Other three paths in these two gourps were not constant. Differences in the coefficients of SSCM-SSCMP may have contributed to the disparity between Acr and Con sustainable performance in the setting of building companies. Among Arc, SSCM remained correlated with a greater SSCMP. However, among Con, SSCM was still associated with a lower SSCMP.Meanwhile, it also show that the indirect path(p1 & p2) of Con is much over the direct path (p3) in this model.

Table 4 18. Structural model: Standardized coefficients for two models (universal model and group-sensitive model) of relations between SCDC, SCR, SSCM and SSCMP.

	Universal model estimates		Group sensitive model estimates	
Parameter (label)	Arc	Con	Arc	Con
SCR-SCDC(p1)	0.710	0.480	0.664	0.508
SCDC-SSCM(p2)	0.469	0.765	0.490	0.741
SCR-SSCM(p3)	0.597	0.343	0.563	0.348
SSCM-SSCMP(p4)	0.938	0.651	0.918	0.677

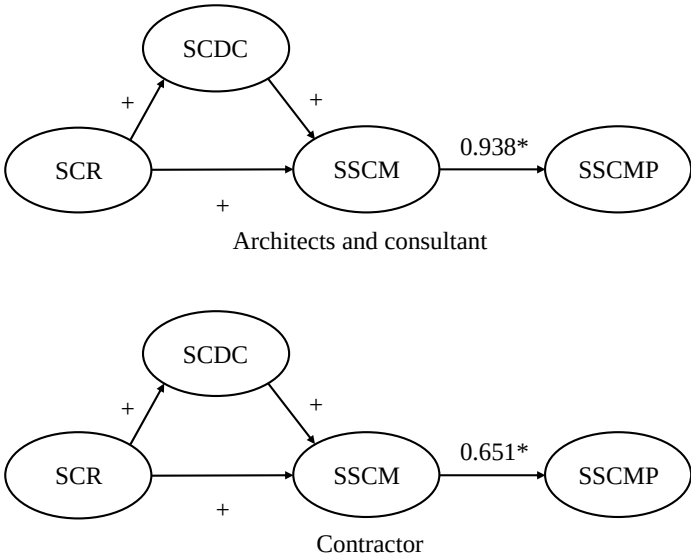

Fig.4- 10 Multi-Group Result of structural models.

Schematic illustrations of significant paths in four samples: SCR= Supply chain resilience; SCDC= Supply Chain Dynamic capabilities; SSCM= Sustainable supply chain management; SSCMP= Sustainable supply chain management performance; (+) =positive path coefficient; * = Not invariance path.

4.4 Chapter Summary

This chapter reviewed the findings from the quantitative analysis phase, which followed SEM guidelines. At first, it went over the process of cleaning and analysing data. After that there was a discussion of the results from the EFA and CFA that were used to develop the one-factor congeneric measurement models used into the structural model's computation of the latent components. Each multi-item construct was accompanied by an evaluation of its construct reliability and validity, common method variance (CMV), measurement model invariance, and a set of specified goodness-of-fit indices and one-factor congeneric measurement models. With high ratings for construct validity and reliability, the findings showed that CMV was not a problem and that configural and metric invariance had been shown in that the model parameters were replicated similarly across groups. Therefore, all multi-item constructs' composite variables were computed using one-factor congeneric measurement models and afterwards included in the structural route model.

As a result, structural path analysis was used to prove underlying assumptions of the conceptual model presented in chapters 2&3. It consists mostly of mediation analysis and cross-group comparisons. According to the findings of the mediation study, dynamic capacities can mediate resilience and sustainable behaviours. Specifically, the multiple mediation analysis findings indicated that the SEI of dynamic ability was primarily responsible for this mediating impact. Under this mediation simulation, the study also examined construction supply chain enterprises at two distinct sites (Acr & Con). Except for the variances in SSCM at Arc & Con, the results indicated that the research questionnaires and research models were identical between the two distinct types of firms. Comparing structural pathways

reveals that there are no changes in the mediating pathways. Still, there are disparities in the influence of sustainable practises on performance in Arc and Con, although they all demonstrate positive impacts. This disparity might be due to the difference in SSCM between ARC and Con. Though the outcomes are presented and analysed to some extent, a more in-depth examination of the data is presented in the next chapter. In order to provide a summary of the findings from the quantitative research phase, all tested hypotheses are compiled in Table 4-19.

Table 4-19. Final hypothesis Result.

Hypotheses	Decision
$H_{1a\ to\ 1i}$: SPD, EP, ECC, IGM, IR, DM, SM, CDI and RL positively reflect SSCM.	Support
$H_{2a\ to\ 2d}$: ENVP, OPEP, ECOP, SCOP positively reflect SSCMP.	Support
$H_{3a\ to\ 3d}$: CC, RE, CU, AG positively reflect SCR in	Support
$H_{4a\ to\ 4c}$: SEN, SEI, REC positively reflect SCDC	Support
H_5: SCR positive impact SSCM	Support
H_6: SCR positive impact SCDC	Support
H_7: SCDC positive impact SSCM	Support
H_8: SSCM positive impact SSCMP	Support
H_9: SCDC mediate the relationship between SCR and SSCM	Support
H_{9a}: REC mediate the relationship between SCR and SSCM	Reject
H_{9b}: SEI mediate the relationship between SCR and SSCM	Support
H_{9c}: REC mediate the relationship between SCR and SSCM	Reject
H_{T1}: Invariance of unconstrained between Arc and Con	Support
H_{T2}: Invariance of measurement weight between Arc and Con	Support
H_{T3}: Invariance of random measurement residuals between Arc and Con	Reject
H_{T4}: Invariance of structure covariance between Arc and Con	Support
H_{T5}: Invariance of the latent mean of Structure means between Arc and Con	Support
H_{T6}: Invariance of path coefficients between Arc and Con	Reject

SCR= Supply chain resilience; SCDC= Supply Chain Dynamic capabilities; SSCM= Sustainable supply chain management; SSCMP= Sustainable supply chain management performance; SEN=supply chain sensing; Sei=Supply chain seizing; Rec= supply chain reconfiguration; Arc=Architects and consultants; Con= Contractor.

Chapter 5: Discussion and Conclusion

It is the first study to construct a resilience and sustainability model and establish the connection between resilience, sustainability, dynamic capacities, and their final effect on sustainability performance. This research tested the interrelationships between these factors and eighteen hypotheses. This chapter examines the study's preliminary results derived from qualitative and quantitative data and compares and contrasts them with earlier research. This research aims to develop and test a model connecting supply chain resilience and sustainability and to evaluate the possible mediating impacts of China's construction supply chain's dynamic capacities on resilience and sustainability. All hypotheses except H10a, 10c, Ht3, and Ht6 are supported. This chapter summarises and examines significant findings linked to hypotheses, first by comparing quantitative data gathered in the current study with data collected in earlier studies and then by describing how the data collected in the current study support the hypothesis. This chapter will address the theoretical and practical implications of this study. In addition, it exposes the limitations of resilience and sustainability research and practice and gives a roadmap for the future.

5.1. Discussion

It is the first study to construct a resilience and sustainability model and establish the connection between resilience, sustainability, dynamic capacities, and their final effect on sustainability performance. This research tested the interrelationships between these factors and eighteen hypotheses. This chapter examines the study's preliminary results derived from qualitative and quantitative data and compares and contrasts them with earlier research. This research aims to develop and test a model connecting supply chain resilience and sustainability and to evaluate the possible mediating impacts of China's construction supply chain's dynamic capacities on resilience and sustainability. All hypotheses except H10a, 10c, Ht3, and Ht6 are supported. This section summarises and examines significant findings linked to hypotheses, first by comparing quantitative data gathered in the current study with data collected in earlier studies and then by describing how the data collected in the current study support the hypothesis.

5.1.1 Secondary Order

Each theme of this study involves the construction of second-order models. The structure of the second-order model is the study's foundation and first contribution. It incorporates findings from literature reviews and focus groups on defining the application of these themes in the Chinese context.

This section paves the way to answer Research Question 1 (RQ1) by executing Objectives 1 and 2 (OBJ 1& 2). The findings correspond with the conceptual development section's secondary structure, and the empirical examination enhances our existing grasp of the micro-foundations of supply chain dynamic capabilities. Moreover, the four kinds of resilience practices guide managers to outline actions that

promote resilience and mitigate the probability of resilience failures by addressing these pivotal factors. More precise and comprehensive sustainable management practices can amplify the supply chains' sustainability performance, conferring benefits to all supply chain participants. However, it's essential to recognize that resilience could escalate the cost of coordination and reduce flexibility, as suggested by Shashi et al., 2019. Hence, managers must comprehend the balancing act between efficiency and effectiveness and identify the most suitable resilience strategies for sustainable performance. The following sub-section will explain these results in detail, and the subsequent section will integrate these insights into structural pathway models to investigate causal relations among distinct components.

5.1.1.1 Supply chain resilience

This research considered a comparison approach to confirm supply chain resilience construction by a second-order model (Oliveira & Roth, 2012). The result of this research is 0.989, which is a piece of reasonable evidence as a target coefficient for the dynamic capacity structure of secondary supply chains (Doll et al., 1994). Although the second-order model sacrifices some of the advantages in the goodness of fit, the result of kinds goodness-of-fit shows that supply chain resilience as a high-order model still provides an acceptable fit, such as GFI, CFI and AGFI very close to the benchmark 0.90, The lower RRMSEA equals the benchmark 0.08. The path of CC, RE, CU, and AG are significant, which means the successful construction of the SCR second-order model. It indicates that these four practices can describe the relationship and path of supply chain resilience in a high-order structure. The path between supply chain resilience and its underlying implementation is CC, RE, CU, and AG. Consequently, supply chain resilience may be understood as a second-order multidimensional structure composed of CC, RE, CU, and AG.

This study proposes a second-order factor model for measuring supply chain resilience. In addition, in the measurement model, there was a significant positive correlation (i.e., $p < 0.001$) among the four first-order factors established in this study. The findings provide preliminary support for the integration of supply chain resilience, suggesting that supply chain construction should consider four aspects of dynamic capability development (i.e., CC, RE, CU, AG). This study's findings guide the manager in building supply chain resilience. For example, "we determined that a risk management culture is critical to dealing with potential disruptions." In practice, this research has found examples of managers using contractual suppliers. The model shows that this reduces the contractor's impact on material outages while reducing waste and increasing the contractor's cash flow resilience. In addition, the research demonstrates the need to periodically review past projects, which may not be necessary for some managers but can be used to identify stabilizing factors in the course of a project by reviewing the project over a long period. In the focue group case, the contractor regularly reviewed previous projects and found a mismatch between some common building materials and the new project, thus avoiding the costly and potential risks of changing the project after it was built. In conclusion, the items and factors constructed in this study provide actionable and instructive information for implementing supply

chain resilience practices. This enables managers to consider the application of SCR practices for each project and factor and to highlight areas requiring special consideration. Second, higher-level structural conceptualizations, such as first- and second-order hierarchies, broaden the dimension of flexibility for managers to view SCR implementation at a higher level of abstraction beyond the individual project and factor layers (Zhu et al., 2008). This study presents a high-order resilience model for the first time, which extends the application of supply chain elasticity from theory to practice. For example, according to Christopher &Peck (2004) and Sheffi & Rice (2005), this study divides the practice of resilience into four aspects: CC, RE, CU, and AG. Each practice is reflected in 3 to 5 measures related to the construction industry. By reflecting on the particular practice, these specific measures prove to what extent the enterprise has the flexibility of these four aspects.

5.1.1.2. Supply chain dynamic capabilities

The traditional view of SCDC emphasizes implementing effective management practices to deal with a company's problems (Teece, 2007). Based on a supply chain management perspective, more literature in this field has emphasized the need for the entire supply chain in a corporate management framework (Lambert et al., 1998; Barney, 2001). However, there are some differences between a company's supply chain dynamic capabilities and dynamic capabilities. A valid measurement structure can determine if the difference is acceptable. Using a large-scale survey of China's construction supply chain, five different supply chain tiers including clients, architects and consultants, contractors, suppliers and regulators, this study goes beyond the traditional, single-tier supply chain Focused on the ability of a dynamic view to improve and empirically validate a multi-dimensional measurement model of supply chain dynamic capabilities that considers both upstream and downstream issues in the construction industry. Based on the dynamic capability's perspective (Teece, 2007) and the definition of supply chain management Lambert et al., 1998, and according to the definition of supply chain dynamic capabilities provided by Lee & Rha (2016), 12 (ie Items/indicators) capability practices are Identify the hierarchy that constitutes the dynamic capabilities of the supply chain. This study proposes a second-order factor model for measuring the supply chain dynamic capability in the construction industry. Furthermore, in the measurement model, there was a significant positive correlation (ie, $p < 0.001$) among the three first-order factors established in this study. The research results provide preliminary support for the integration of supply chain dynamic capabilities, which indicates that supply chain construction should consider three aspects of dynamic capability development (ie, SEN, SEI, REC). According to Lee & Rha (2016), highly interconnected dynamic competency practices can help practitioners recognize the close relationship between supply chain dynamic competency practices and help companies navigate uncertain and unexpected environments. The results show that all the estimated parameters are very significant, and the proposed second-order model has a better fit. In this case, a target coefficient of 1, which is the ratio of the chi-square of the first-order model to the chi-square of the second-order model, provides reasonable evidence for the dynamic capacity structure of the secondary supply chain (Doll et al., 1994).

The establishment of the second-order model of supply chain dynamic capabilities means that dynamic capabilities can also be used in supply chain management, and its significance is multiple. First, a multi-layered model of supply chain dynamic capabilities provides a management view to achieve supply chain resilience and supply chain sustainability. The existence of a second-order structure provides a more interpretable model of the role of managers in understanding supply chain dynamics. For example, the results demonstrate that the implementation of supply chain dynamic capabilities should be multi-faceted rather than limited to a single aspect or factor. Second, supply chain perception, capture and reconstruction are issues that need to be considered in supply chain operations, which is consistent with the mainstream view of dynamic capability research.

5.1.1.3. Sustainable supply chain management

This research provides a second-order factor model for quantifying sustainable supply chain management in the construction sector. A target coefficient of 0.989 demonstrates the model's validity (Doll et al., 1994). Same, the second-order model sacrifices some of the advantages in the goodness of fit, but the result shows the goodness-of-fit indices are an acceptable fit, such as GFI, CFI and AGFI, very close to the benchmark 0.90. The lower RRMSEA equals the benchmark of 0.08. The path of PD, EP, ECC, IGM, IR, DM, SM, CDI, and RL are significant, which means successfully building the SSCM second-order model in the construction sector. It implies that these nine practices may define the path and relationship of sustainable supply chain management in a high-order structure. PD, EP, ECC, IGM, IR, DM, SM, CDI, and RL are the steps between supply chain resilience and its foundational application. In the construction industry, sustainable supply chain management may be visualized as a second-order multidimensional structure composed of PD, EP, ECC, IGM, IR, DM, SM, CDI, and RL.

A significant positive association (p0.001) was seen between the sustainable supply chain management devised in this study and the nine first-order factors. The results imply that construction companies should examine several dimensions of sustainability (i.e., economic, environmental, and social), giving preliminary support for the integrated character of SSCM. Highly correlated management practices can help practitioners recognize the close relationship between SSCM practices while discerning their differences, providing differentiated management insights for firms at different nodes in the supply chain. In addition, the second-order model of SSCM offers managers a more complementary and synergistic strategy for ensuring the sustainability of their supply chains. Understanding the working mechanism of SSCM in the supply chain is aided by a second-order model that is easier to interpret. It also demonstrates that SSCM implementation should be multidimensional and not restricted to a single aspect or component.

5.1.1.4. Sustainable supply chain management performance

The model estimated parameters of both the first order and second-order models were significant in the model test. GFI, AGFI, CFI, and RMSEA showed that the proposed model adequately matched the data. It means that the SCCMP in the building supply chain should also be multidimensional, which also uniformly constitutes the higher-order factors of the SSCMP. In the presence of a second-order model, SSCMP should be comprehensive, embedding SOCP, ECOP, ENVP, and OPEP measurements. The significance of the findings demonstrates the validity of the sustainable performance structure used in this study for the construction industry and validates a tool for measuring the structure. Based on TBL theory, an operational dimension is attached to the measurement items in the tool, so the second-order model of SSCMP includes social performance (SOCP), economic performance (ECOP), environmental performance (ENVP), and operational performance (OPEP).

The multidimensional conceptualization provides insights into the construction of sustainable supply chain performance and its relationship to dimensions. First, the projects and sub-dimensions of sustainable performance based on the supply chain foundation are constructed, which provides intuitive and actionable information for sustainable supply chain performance. Second, the successful construction of second-order models provides a higher level of structural conceptualization, which allows managers to look beyond individual projects and sub-dimensions when looking at performance to a higher and more specialized level of sustainable supply chain performance. Managers can review performance from the perspective of individual projects and sub-dimensions and identify areas that require special attention. For example, if a contractor performs poorly on a project "reducing energy consumption costs," This will demonstrate the necessity for project-specific enhancements. On the other hand, structural analysis at a higher abstraction level provides many possible significant benefits. It may show patterns that are difficult to discern via the analysis of individual items and subdimensions alone. For example, contractors underperformed on some sustainable performance projects and excelled on others. The high-level model of this study provides a higher and more abstract level to help managers identify these items for improvement. It also implies that performance assessments at a higher level of abstraction might aid in weighing the need to enhance activities in one area or develop plans to sustain another dimension of excellence that a contractor may attain.

5.2.2 Structural Path

Based on the second-order model, this study explores the relationship between different themes. The exploration results not only supported and supplemented the gaps of resilience and sustainability in the existing literature but also stimulated the interest of further exploration in this study. The completion of Objective 3 (OBJ3) allows this research to answer Research Question 1 (RQ1), demonstrating that the Supply Chain Resilience (SCR) model presents a minor hindrance to achieving sustainable development in practice. Given the pressing nature of sustainability issues, these "winning solutions" - resilience programs, particularly those that can be swiftly "scaled up" without exhaustive investigation into the context and interactions of resilience in supply chains - become appealing (Reyers et al., 2022). The

upcoming sub-sections will delve into each path in more detail to provide answers to this question. Nevertheless, resilience cannot perform as planned within a supply chain unless we account for the environmental factors (e.g., micro-foundation, upstream, and downstream) and how they interact with the "scale" of the problem, next section will explain this in detail and support to address RQ2.

5.2.2.1 Supply chain resilience (SCR) and Sustainable supply chain management (SSCM)

The results support the idea of building resilient operations to enhance the sustainability of construction activities. This result provides new empirical evidence for addressing traditional architectural challenges. For example, Hittle & Leonard (2011) acknowledge that failure to manage late material is an unplanned risk for contractors that can result in financial loss and damage. In traditional project management, these late materials will lead to delays in the construction period. Large construction companies may choose to increase procurement staff to assist project managers may be another option (Heaton et al., 2022). However, an additional budget is required to cover the cost. Especially for materials with long lead times, a resilient construction organisation should ensure that product inventory is readily available by providing transparent and explicit communication between contractors and suppliers. Additionally, through a streamlined material supply approach of collaborative effort, resilience's agility guarantees that supplies are delivered as needed. When ordering supplies, BIM (Building Information Modelling) participation has facilitated the communication of accurate information among project teams (Ma et al., 2020; Xue et al., 2011). At the beginning of the contract, the contractor can also prepay for rare goods, establish a supply timetable, and provide fair refunds for leftover materials (Heaton et al., 2022, F18). This flexible contract will enhance reverse logistics in improving the environmental sustainability of construction activities by avoiding unnecessary waste. However, this payment mechanism is only practical if sufficient laws exist to recover funds to cover contractual obligations (Peters et al., 2019). At the same time, this has also led to the importance of on-site inventory management. Not only must the material not be damaged before use, but it must also meet the supplier's return requirements. It is another challenge for field management managers. A risk management culture (CU) of resilience can alleviate this challenge. Through practical training, managers can enhance their understanding of field risks and have certain rights to deal with potential inventory risks on time. Heaton et al., 2022, also recommend that when ordering supplies, BIM (Building Information Modelling) participation has facilitated the communication of accurate information among project teams (Ahmed 2017). At the beginning of the contract, the contractor can also prepay for rare goods, establish a supply timetable, and provide fair refunds for leftover materials. Through this training, the improved operational capabilities and safety awareness of managers and employees have also enhanced the company's social responsibility practice for employees to a certain extent. The findings, therefore, provide strong empirical evidence for SCR to support SSCM.

5.2.2.2 Supply chain resilience (SCR) and Supply chain dynamic capabilities (SCDC)

SCR cause an excellent operation process in terms of measurements and its characteristics. One of the keys expected novel contributions is the empirical examination of the impact of SCR on SCDC (.640***). Based on the above discussion on the SCDC as an operational process or routine that some out factor can influence, this research will have the confidence to explore how supply chain resilience impacts the process in the supply chain operation. These statistics results provide evidence for SCR strategies, including the resilient process of organizing operationalization, which may lead to an excellent implementation of SCDC. For example, "We value what any level of supply chain disruption shows us where we can improve (Sheffi & Rice, 2005; Ambulkar et al., 2015)". This measurement is one of practice and describes an essential resilient operation process, how businesses learn from disruption. This process of analyzing troubles, in part, makes the process mentioned above of regularly reviewing the potential impact of the supply chain more concrete. It aligns with Eriksson's (2014) perspective, which holds that these studies link the discussion to knowledge processes while making SCDCs real through recognizable organizational processes. Specifically, according to the claim of Brandon-Jones et al. (2014), the implementation of supply chain resilience is periodically reallocating resources, in particular, simplifying processes, reducing inbound lead time, and reducing the time without added value (Christopher & Peck, 2004). And this reduced time will be repurposed as an organization's potential capacity resource to respond to changes in demand (Altay et al., 2018; Lohmer et al., 2020). In addition, reallocating new technologies in this operational process can significantly improve the organization's responsiveness and decision-making capabilities (Pavlou & El Sawy, 2011). The improvement of these capabilities means the enhancement of dynamic capabilities. Thus, the result explains how SCR impact SCDC. Namely, the dynamic ability of the enterprise will be subtly improved in the enterprise's efforts to build a resilient supply chain to deal with uncertainty.

SCR can improve supply chain DC of construction companies in terms of reporting systems and forecasting tools. Construction projects are highly complicated, and the biggest reason for vendor-related delays is the late delivery of a variety of specified components (Heaton et al., 2022). But SCR practice can effectively alleviate this problem because re-engineering (RE) of supply chain resilience will improve predictability and visibility by streamlining the material sourcing supply chain (Ambulkar et al., 2015). High predictability and visibility are the basis for constructing SEI (Adam & Lindahl, 2017), and timely decision-making usually requires sufficient information to support it. Integrating resilient practices can increase supply chain accountability and combat process fragmentation (Adam & Lindahl, 2017; Tecce, 2007). They are specifically simplifying lead time in the decision-making process by reallocating enough rights to site managers to respond effectively to timely demands in the current uncertain environment. Reducing the built program's speed in comparison to conventional techniques enables the project manager to concentrate on fulfilling sporadic project milestone dates (Heaton et al., 2022). Yet, RE may spare managers from undertaking a difficult job by enhancing flexibility through simplification. It is a challenging option and trade-off to avoid the built programme without compromising completion within the specified term (Bagaya & Song 2016). On the other hand,

resilience strategy has encouraged companies to develop anomaly reporting systems and forecasting tools for early awareness of impending disruptions (Tecce, 2007; Pavlou & El Sawy, 2011). This process improves the enterprise's ability to define enterprise boundaries correctly and complete the seizing capability of the control platform by specifying the technological tools required by the enterprise BIM technology (Eriksson, 2014). For instance, it may give players in the material supply chain a single source of truth and confidence by guaranteeing that accurate information is readily accessible (Adam & Lindahl, 2017; F14). These reliable sources also give players in the supply chain the confidence to make timely and appropriate decisions. Therefore, this research support that construction companies can improve the dynamic capabilities of their supply chains through resilience strategies.

5.2.2.3 Supply chain dynamic capabilities (SCDC) and Sustainable supply chain management (SSCM)

Another result of the path analysis is that SCDC significantly impacts the improvement of SSCM. This result has been mentioned in the comparative literature (Hong et al., 2018; Felsberger et al., 2022). It empirically testifies the SCDC and SSCM framework (McDougall et al., 2021). And this finding confirms Elf et al. (2022). 's conclusion that dynamic capacities provide the potential to establish a sustained competitive edge for public construction. As Hong et al. (2018) demonstrate, by boosting the total dynamic capability, the activeness and innovativeness of significant enterprises on the supply chain may be enhanced, and their value in monitoring the environment can be realized. Developing the dynamic capacities of public customers is particularly significant since it safeguards and strengthens the client organization's role in supporting innovation in the construction sector (Manley, 2006). Seifert (2015) examine Nestle's "Zero Waste to Disposal" project and conclude that the practice of SSCM is governed by its routines and processes, which significantly influence the dynamic capacities of the supply chain. This conclusion is consistent with some observations made in China indicating that several outstanding construction companies have improved their SSCM processes by implementing dynamic capabilities. For instance, China Coal Technology & Engineering Group, one of the largest and most competitive firms in the business sector, has offered smart supply chain architecture. It is the process of combining existing resources and utilizing information technology to establish a viable, controllable, and tractable intelligent supply chain and dynamic and sustainable management. In the measurement of "Managing complements and 'platforms,'" Teece argues that while the value of scale and scope economies to enterprise boundary choices may have diminished, the importance of specialism to enterprise strategy has increased (2007, p.1332). Consequently, the dynamic practice of integrating resources enables enterprises throughout the supply chain to collaborate and achieve joint development in terms of profitability and sustainability. It explains the possible motive for governments and construction corporations seeking a resource integration solution. This research's focus group has also confirmed that "BIM is a carrier, a database. Various disciplines can coordinate through a platform to improve the efficiency of our work. For example, energy-saving, capital saving, investment, etc. (F18)". Consequently, dynamic capabilities play an essential role in facilitating sustainable construction supply chain management adoption.

5.2.2.4 Sustainable supply chain management and Sustainable supply chain management performance

The results support that SSCM can enhance sustainability performance in the construction supply chain. This conclusion is consistent with Cruz's (2009) and Cabral et al. (2012) findings, where it is suggested that involvement in SSCM activities by an organisation reduces excess inputs and wastes, resulting in a cost reduction. The success of this hypothesis appears to depend on employees' attitudes and efforts to enhance operational performance (Das, 2018). It may also depend on the maturity of operational processes, where the involvement and contribution of employees will positively impact operational performance (F10). In addition, economical operations indicate the resources an organisation saves due to improved operating procedures and a better working environment, as evidenced by lower production costs and enhanced logistical efficiency (Yang et al., 2011). Although most studies indicate that significant resources are invested in social elements to improve the socioeconomic status of employees, these resources cannot be used to improve operational performance (Welford & Frost, 2006). Conversely, possibly due to immature operational processes and a lack of coordination between operations and other crucial departments, allocating resources to social practice has diluted operational performance (Zailani et al., 2012). However, this trend did not appear among the construction companies in this survey, which may be because construction companies have more mature operational processes than other industries (Heaton et al., 2022). Therefore, the results of this study may show that construction companies of a certain size can use their previous experience of sustainability to enable them in the construction process to gain operational advantage. Still, the front and back ends of the supply chain of the majority of construction firms are not adequately connected (F24).

5.1.3 Mediation

Based on establishing every two themes of path relations, this study further considered the existence of mediator variables. This study takes dynamic capability as a mediating variable to discuss how resilience affects sustainability through dynamic capability. It will involve simple mediation and multiple mediations. The first part is to examine whether there is a case of dynamic capabilities as a mediating variable and then use multi-mediations to examine how dynamic capacity affects the relationship between resilience and sustainability.

By fulfilling Objective 4 (OBJ4), this research reveals that among Resilience Capacity (REC), Sensing Capability (SEN), and Seizing Capability (SEI), only SEI significantly and robustly mediates between Supply Chain Resilience (SCR) and Sustainable Supply Chain Performance (SSCP) within the construction supply chain. Consequently, actions within China's construction supply chain should align with the changes that have been identified. Enhanced sustainable performance metrics can be realized through implementing collaborative maneuvers or other strategies related to seizing capability. This outcome elucidates the role of dynamic capabilities in meeting sustainable performance objectives,

founded on resilience practices (Research Question 2, RQ2). The subsequent sub-section will delve into this result in more depth.

5.1.3.1 Single Mediation

Consistent with predictions, the dynamic capabilities of supply chains mediate the relationship between resilience and sustainable practices. Current knowledge suggests that no previous study has tested how dynamic capabilities work between supply chain resilience and sustainable practices. The recent research supports the link between supply chain resilience and sustainable practices observed in previous studies (Negri et al., 2021; Sauer et al., 2022, F14). This finding extends the application of dynamic capability theory to construction supply chains. That is, the dynamic capabilities of firms are the result of their building of solid resilience, resulting in excellent dynamic operational capabilities that enhance sustainable practices in the supply chain. These results show that in building supply chain resilience, some measures to improve the operation process of enterprises will improve the dynamic capabilities of the supply chain. When these measures are absorbed and displayed by the dynamic capabilities of the supply chain, the dynamic capabilities will help enterprises. Improve sustainable practices in its supply chain. The following sections will elaborate on how dynamic capabilities mediate the relationship between SCR and SSCM through the results of the remediation analysis.

5.1.3.2 Multi Mediation

The mediating effect of SEN is insignificant, which is different from the results of some scholars (Lee & Rha, 2016; Eltantawy, 2016; Chowdhury & Quaddus, 2017). It may be due to the complexity of the construction supply chain. Although the Chinese government has strongly encouraged construction companies to use BIM systems (Ma et al., 2020), members of the construction supply chain are relatively extensive (Xue et al., 2011). They have not yet become widespread. It means that even if the focus enterprise has a BIM system, its supply chain partners do not have it. The focus enterprise will also lack information in this link, resulting in insufficient SEN capabilities at the supply chain level as a sustainable development main help.

Similarly, the mediating effect of REC is insignificant. It is because this research extends the research of traditional business dynamic capabilities to the firm's supply chain, and the research outcomes reflect the enterprise's supply chain's dynamic capabilities. REC is not simply an operating plan centred on focus firms but also involves collaboration with other supply chain partners. Unlike previous interruptions in supply networks, such as natural disasters and terrorist attacks, the COVID-19 pandemic has had a worldwide impact on supply chains due to the implementation of travel restrictions and lockdowns (Nikolopoulos et al., 2021). Compared to disruptions with purely local repercussions, this feature makes it more difficult for enterprises to gain help from their supply chain partners. Still, they can seek support from non-local supply chain partners to ease these pressures. Consequently, the capacity to easily acquire RECs has become crucial for companies wishing to enhance supply chain

dynamics. The findings suggest that the REC capacity of China's construction supply chain is not yet sufficient as a significant contributor to sustainable development.

As the only and main mediating variable, SEI is similar to the results of scholars (Eltantawy, 2016; Chowdhury & Quaddus; 2017; Sabahi & Parast, 2020). They argue that dynamic capabilities, including SEI, can act as mediators to facilitate SSCM. However, the results of this study support only one dynamic capability of SEI for two reasons. Outstanding SEI capabilities are usually reflected in the communication and innovation of the focal company. Based on the complexity of the construction enterprise itself, SEI is conducive to solving temporary problems on-site and reducing the loss of the enterprise (Heaton et al., 2022). It is essential for the communication procedures of China's construction industry, the communication procedures of SEI4 aimed at mitigating conflicts and establishing a long-term cooperative relationship for enterprises (Ma et al., 2020). Moreover, despite the hazards of developing technologies, the vast majority of researchers have demonstrated that innovation has a beneficial impact on the sustainable growth of businesses (Kwak, 2018). Qualitative findings also support this view. For example, with a specific resilience culture, Contractor A increases the understanding of the suitability of different building materials by regularly reviewing delivered projects, which also increases Contractor A's routine for using new materials in new projects (F18). The final contractor A addressed the potential risks posed by the new project environment by using new building materials. Furthermore, based on its external supply chain, The COVID-19 pandemic can continue longer than most conventional disturbances, such as natural catastrophes. The duration of this external shock is sufficient to permanently alter the behaviour of supply chain participants (e.g., consumer preferences and suppliers' material delivery methods) (Poelman et al., 2021), necessitating the implementation of pandemic-driven resiliency by businesses. They demonstrated excellent communication and innovation in practice to help companies find appropriate ways to implement sustainability management in new contexts (Helfat, 1997). Thus, the quantitative findings of this study provide empirical evidence for SEI as a resilient and sustainable catalyst.

5.1.4 Invariance analysis

Multiple sets of SEM results show differences between the perspectives of supply chain partners. Although the overall model was validated across all four groups of the measurement and structural models, there were some significant differences in effect sizes. This indicates that all sample groups see the effect of supply chain collaboration on business performance in a similar manner. However, they emphasize differently. The invariance analysis of the study provides a better understanding of the applicability of the study model in the Chinese construction supply chain and its effectiveness of structural invariance. This research finds, based on a series of invariance studies, that the model result structure is independent of configuration loadings, factor loadings, latent variable covariances, and latent mean across types. Four of the six invariance tests conducted were found to be invariant, including the configuration and factor loadings with the highest significance. This finding shows that Designer

(ACR) and Contractor (CON) construct the TAM structure in a similar manner and with similar factor loadings, including its variables SCDC, SCR, SSCM, SSCMP. This conclusion also suggests that our findings are not limited by firm type. With such confirmation, this study confirms the applicability of the research model in the construction supply chain in China. The study also concluded that SCR and SCCM are not subject to possible firm-type biases and are critical to influencing the performance of sustainable construction supply chains.

Although our invariance analysis showed that our structure was largely unaffected by location in supply chain, this research identified some sources of non-invariance in these variable subgroups. There are differences: 1) the error term of SSCM and SSCMP is between ARC and CON; 2) SSCM→SSCMP coefficient path between ARC and CON. Therefore, invariances in measurement error and path coefficients are found in our research model. The implications for researchers of these invariant findings are straightforward. They need to go back to the item in question and evaluate the wording, semantics, and structure of the question for improvement. However, researchers must be aware that it is nearly impossible to develop a questionnaire free of misunderstandings for all different sample groups: researchers should consider and verify measurement invariance across sample groups when designing their survey instruments. More importantly, the lack of invariance between paths offers practical insights. First, it suggests that SSCM brings more benefits in terms of ACR, while also implying that CON has potential for better implementation of sustainable practices. Second, the majority of sustainable development practices where contractors utilize resilience are focused on short-term outcomes in response to shocks and isolated incidents ($p1 = 0.508$; $p2 = 0.741$), without sufficient acknowledgment of the micro-foundations of development. By differentiating between various types of firms, these results effectively address Research Question 2 (RQ2).

5.2. Research Implications

Application of resilience practice to the construction supply chain provided abundant insights into how risks in the construction supply chain can be understood and how firms involved in the construction supply chain can effectively mitigate these risks and improve sustainable performance. Consequently, this research has produced several theoretical and managerial implications.

5.2.1 Theoretical Implications

With the gradual globalisation of Chinese construction companies and their growing interest in the triple bottom line, this study examines the critical structures of Chinese construction supply chains, such as resilience, dynamic capabilities, sustainable management practises, and performance, intending to develop and then test a set of hypotheses systematically. The development of a large and diversified body of literature on resilience and sustainability has led to a great deal of engineering study involving trade-offs between these two topics. To support it, it was necessary to investigate specific statements, such as the link between supply chain resilience and sustainable supply chain management. The

ambiguity necessitated the use of empirical testing to determine the nature of this association. In response, the findings of this study contribute to the expanding empirical literature on sustainable supply chain management and resilience, particularly from a managerial standpoint. It emphasises the significance of resilience and dynamic capabilities in developing and maintaining sustainable supply chain management.

The research has provided a more accurate and comprehensive definition of supply chain resilience, sustainability and dynamic capability with both process and relationship focuses. Numerous studies have demonstrated the causes and outcomes of resilience and sustainability, but little attention has been paid to improving their connection. One of the significant contributions of this study to the existing theory regarding the relationship is that it demonstrates, from a managerial standpoint, how effective resilience influences sustainable practises based on the dynamic capability that includes supply chain sense, seize, and reconfiguration. It also emphasises the function of supply chain seizing within the Chinese construction industry by highlighting its significance in improving the construction site condition. It was also a cross-cultural empirical examination of the link between supply chain resilience, dynamic capacities, and sustainability.

The primary contribution of this work is the analysis of the direct and indirect contribution of supply chain resilience to sustainable supply chain management, highlighting the significance of resilience methods for establishing sustainable practices in an unpredictable environment. This research contributes uniquely to the literature on sustainability in the Chinese construction supply chain. Notably, it provides a framework for identifying the sustainable practice of a company's focus, where resilience practice serves as the foundation for all strategies and activities. Under the triple bottom line theory and dynamic capabilities, this study found that dynamic capabilities mediated the link between supply chain resilience and sustainability. Specifically, the results indicate that only supply chain capture may improve the connection. Although supply chain perception and reconfiguration are not the intermediaries between resilience and sustainability, this research deepens our understanding of dynamic capacities theory and triple bottom line theory.

It is one of the few studies that has studied and contrasted the impact of supply chain tier on sustainable behaviour and performance. The findings suggest that at the design layer, sustainable practices can increase sustainable performance. In conclusion, this study revealed that the efficacy of sustainable practises is more satisfying for the designer tier than the contractor tier in the building supply chain. This research adds to a better knowledge of the performance and practises of the Chinese construction industry's sustainable supply chain. It has examined the applicability in an Asian setting of the triple bottom line and dynamic capacity theories, which were constructed and developed in Western nations.

5.2.2 Practical Implications

Several practical implications can be recommended from this study. The results show evidence of specific links between resilience, dynamic capabilities, and sustainability in the supply chain, these links provide a path for understanding how managers can consider dynamic capabilities to develop sustainable practices and obtain a high level of sustainable performance. The positive aspects of dynamic capabilities have implications for organisations and middle and high managers. These kinds of organisations require customized and effective resilience for successful sustainable management. Thus, the creation of dynamic capabilities demands that the right resilience strategies and practice adopt appropriate sustainability, showing concern for their risk management culture, which reduces the likelihood of loss and increase the stability and recovery ability.

Due to the significance of supply chain dynamic capabilities for resilience and sustainability, and this research has provided an alternative way for supply chain to improve the effectiveness and efficiency. Growing research has found that resilience and sustainable practices are closely related, numerous studies have also concluded that for resilient businesses, sustainable practices can be effectively implemented in uncertain environments. In today's epidemic environment, companies have to think about how to reduce costs while balancing short-term and long-term sustainable performance. Company leaders need to regularly evaluate the company's resources in order to make timely and optimal decisions amid uncertain practices. decision. Chinese enterprises can try their best to practice more than contracts, such as formulating flexible rules and regulations in line with the characteristics of the enterprise to improve the ability of enterprise managers to deal with potential risks, so as to maintain the effectiveness of enterprise sustainable operations.

Due to the positive relationship between resilience and dynamic capability in supply chain, this research suggests that the development of dynamic be incorporated into new ways of considering management. Although the development and maintenance of dynamic capability is challenging, especially where existing levels of dynamic capabilities are low, dynamic capability can be managed and formed, which is an important feature of supply chain and results in worthwhile outcomes. It may indeed be advantageous for senior management to evaluate which dynamic practice are best understood and accepted by company, which in turn enables them to cultivate a routine that stimulates dynamic capabilities.

Supply chain sense and supply chain reconfiguration do not recommend capabilities for development in the Chinese construction supply chain at the current stage. They indeed show specific positive influence, but it's not enough as worth capabilities to develop, particularly in many other practices. Although there two specific dynamics have been discussed and widely used in previous empirical research, they cannot be supported by the currently Chinese construction supply chain. May because of

the complex supply chain tier, or they prefer to focus on traditional routines particular in high-risk projects.

This research found that level of sustainable practice and sustainable performance in the designer tier is higher than in the contractor's tier. Therefore, it is interesting to highlight the different sustainable practices used in the designer and contractor tier and their impact on performance. The findings suggest that the effectiveness of sustainable practices in contractor face a challenge and exist a great improvement area.

5.3 Limitations and Recommendations for Future work

This study was performed within the setting of the Chinese construction industry, which may be a limitation since generalisations to other contexts should be made with caution. Using the methodology described in this thesis, future research might be done in Western contexts, such as the United Kingdom or the United States, to evaluate the suggested connection model between resilience, dynamic capability, and sustainability in the supply chain. Additionally, it is suggested that further study be conducted on the three-variable connections in China's various businesses.

The study employed a cross-sectional methodology, which is incapable of addressing the dynamic processes of social interaction in general and may prevent the inference of causal relationships. The functional causal links may act in reverse as time passes (e.g., supply chain resilience leads to a sustainable supply chain). It is suggested that quasi-longitudinal design study approaches be utilised to monitor the evolution of these relationships. Because quasi-longitudinal helps clarify the direction of intermediate variable relationships.

Most of the data were acquired by self-reporting, and personal bias may have affected the study's findings (Van Dijk, 2004). This study mainly relied on questionnaires for data collection. Therefore, it is restricted by the participants' willingness to reply and provide correct replies. The amount to which participants may or may not have adequate information to answer all survey questions or their replies get skewed owing to personal biases are potential sources of measurement error. Despite the limitations of Structural path analysis (SPA) in affirming causality, I applied this method in the most comprehensive and rigorous manner in my study. The construction of the model was firmly grounded in an extensive literature review, ensuring theoretical robustness. A future study might employ several methods (such as ethnography and grounded theory) to acquire additional data from the managers' perspective.

This study also examined the unidirectional link between resilience, dynamic capacity, and sustainability. A future study might explore the reverse direction link between them, such as how sustainability leads to dynamic capability, resulting in the development of effective resilience.

Meanwhile, future studies might also investigate the intricate relationships between various metrics. Or investigate more in-depth resilience capabilities, such as CC (cooperation and communication), how much information companies are willing to share to improve their supply chains, and how much this shared information can bring to the supply chain improvement. Finding this balance will benefit the government or enterprises a lot.

5.4 Chapter Summary

The last chapter presents a concise summary of the study, including the research hypotheses' goal, methodology, and ultimate outcomes. Then, the study's theoretical and practical consequences, as well as its limits and research recommendations, are examined in depth.

This study is one of the few to evaluate the influence of resilience on sustainability and test complicated exchange condition causal chains. To contribute to the literature, this study utilised a "multi-approach" that included multi-dimensions of resilience, dynamic capabilities, sustainability and its performance, multi-mediation of dynamic capacities, and multi-level supply chain tiers.

By discovering characteristics such as building information modelling and risk management culture, the research expands our understanding of the resilience of supply chains. In addition, the study addressed the influence of particular dynamic skills on the link between resilience and sustainability. In addition, the research contributes to the literature on dynamic capabilities by investigating dynamic capabilities in the supply chain. The comparison between the designer and contractor tiers on the study model provides an understanding of sustainable supply chain management in Chinese buildings. The major conclusion is that the supply chain serves as only one capacity mediator between resilience and sustainability, creating an indirect relationship between resilience and sustainability to sustainable performance. The report also provides Chinese construction managers with relevant and applicable recommendations for enhancing and enhancing sustainable performance.

Reference

Abdi, H., & Williams, L. J. (2010). Principal component analysis. *Wiley interdisciplinary reviews: computational statistics*, *2*(4), 433-459.

Abdolazimi, O., Esfandarani, M. S., Salehi, M., Shishebori, D., & Shakhsi-Niaei, M. (2021). Development of sustainable and resilient healthcare and non-cold pharmaceutical distribution supply chain for COVID-19 pandemic: a case study. *The International Journal of Logistics Management*.

Ackroyd, S. (2004). Methodology for management and organisation studies. *Critical realist applications in organisation and management studies*, 137-63.

Adam, A., & Lindahl, G. (2017). Applying the dynamic capabilities framework in the case of a large public construction client. *Construction management and economics*, *35*(7), 420-431.

Adelodun, B., Kareem, K. Y., Kumar, P., Kumar, V., Choi, K. S., Yadav, K. K., ... & Khan, N. A. (2021). Understanding the impacts of the COVID-19 pandemic on sustainable agri-food system and agroecosystem decarbonization nexus: A review. *Journal of Cleaner Production*, *318*, 128451.

Adobor, H., & McMullen, R. S. (2018). Supply chain resilience: a dynamic and multidimensional approach. *The International Journal of Logistics Management*.

Ahi, P., & Searcy, C. (2013). A comparative literature analysis of definitions for green and sustainable supply chain management. *Journal of cleaner production*, *52*, 329-341.

Ahmad, S., Wong, K. Y., Tseng, M. L., & Wong, W. P. (2018). Sustainable product design and development: A review of tools, applications and research prospects. *Resources, Conservation and Recycling*, *132*, 49-61.

Ahmed, F. H. (2017). *Improving construction materials management practices in construction sites* (Doctoral dissertation, Universiti Tun Hussein Onn Malaysia).

Ahmed, F., Hasan, S., Rana, M. S., & Sharmin, N. (2023). A conceptual framework for zero waste management in Bangladesh. *International Journal of Environmental Science and Technology*, *20*(2), 1887-1904.

Ali, I., Arslan, A., Chowdhury, M., Khan, Z. and Tarba, S.Y., 2022. Reimagining global food value chains through effective resilience to COVID-19 shocks and similar future events: A dynamic capability perspective. *Journal of Business Research*, *141*, pp.1-12.

Ali, I., Nagalingam, S. and Gurd, B., 2017. Supply Chain Resilience Research: Review, Trends and Opportunities.

Ali, S.M., Moktadir, M.A., Kabir, G., Chakma, J., Rumi, M.J.U. and Islam, M.T., 2019. Framework for evaluating risks in food supply chain: Implications in food wastage reduction. *Journal of cleaner production*, *228*, pp.786-800.

Altay, N., Gunasekaran, A., Dubey, R., & Childe, S. J. (2018). Agility and resilience as antecedents of supply chain performance under moderating effects of organizational culture within the humanitarian setting: a dynamic capability view. *Production Planning & Control*, *29*(14), 1158-1174.

Ambrosini, V., & Bowman, C. (2009). What are dynamic capabilities and are they a useful construct in strategic management? *International journal of management reviews*, *11*(1), 29-49.

Ambulkar, S., Blackhurst, J., & Grawe, S. (2015). Firm's resilience to supply chain disruptions: Scale development and empirical examination. *Journal of operations management*, *33*, 111-122.

Amui, L. B. L., Jabbour, C. J. C., de Sousa Jabbour, A. B. L., & Kannan, D. (2017). Sustainability as a dynamic organizational capability: a systematic review and a future agenda toward a sustainable transition. *Journal of cleaner production*, *142*, 308-322.

Anderson, D. R. (2006). The critical importance of sustainability risk management. *Risk Management*, *53*(4), 66-72.

Ansari, Z. N., & Kant, R. (2017). A state-of-art literature review reflecting 15 years of focus on sustainable supply chain management. *Journal of cleaner production*, *142*, 2524-2543

Arbuckle, J. L., & Wothke, W. (1999). *Amos 4.0 user's guide*. Chicago: Marketing Department, SPSS Incorporated.

Armstrong, J. S., & Overton, T. S. (1977). Estimating nonresponse bias in mail surveys. *Journal of marketing research*, *14*(3), 396-402.

Arunachalam, D., Kumar, N., & Kawalek, J. P. (2018). Understanding big data analytics capabilities in supply chain management: Unravelling the issues, challenges and implications for practice. *Transportation Research Part E: Logistics and Transportation Review*, *114*, 416-436.

Ayvaz, B., Kusakci, A.O., Aydin, N. and Ertas, E., 2021. Designing reverse logistics network for end-of-life vehicles: a sustainability perspective in a fragile supply chain. *International Journal of Industrial Engineering*, *28*(3).

Azevedo, S. G., Govindan, K., Carvalho, H., & Cruz-Machado, V. (2013). Ecosilient Index to assess the greenness and resilience of the upstream automotive supply chain. *Journal of Cleaner Production*, *56*, 131-146.

Badurdeen, F., Iyengar, D., Goldsby, T. J., Metta, H., Gupta, S., & Jawahir, I. S. (2009). Extending total lifecycle thinking to sustainable supply chain design. *International Journal of Product Lifecycle Management*, *4*(1-3), 49-67.

Bagaya, O., & Song, J. (2016). Empirical study of factors influencing schedule delays of public construction projects in Burkina Faso. *Journal of Management in Engineering*, *32*(5), 05016014.

Baghalian, A., Rezapour, S. & Farahani, R.Z. (2013). Robust supply chain network design with service level against disruptions and demand uncertainties: A real-life case. *European Journal of Operational Research*, *227*(1), pp.199-215.
Bagozzi, R. P., & Fornell, C. (1982). Theoretical concepts, measurements, and meaning. *A second generation of multivariate analysis*, *2*(2), 5-23.
Baker, S. R., Bloom, N., Davis, S. J., & Terry, S. J. (2020). *Covid-induced economic uncertainty* (No. w26983). National Bureau of Economic Research.
Balmer, J. M., Powell, S. M., Hildebrand, D., Sen, S., & Bhattacharya, C. B. (2011). Corporate social responsibility: a corporate marketing perspective. *European Journal of Marketing*.
Balogun, J., & Johnson, G. (2005). From intended strategies to unintended outcomes: The impact of change recipient sensemaking. *Organization studies*, *26*(11), 1573-1601.
Barksdale, H. C., & Anderson, L. M. (1982). Comparative marketing: A review of the literature. *Journal of Macromarketing*, *2*(1), 57-62.
Barney, J. (1991). Firm resources and sustained competitive advantage. *Journal of management*, *17*(1), 99-120.
Barney, J. A. Y., & Felin, T. (2013). What are microfoundations?. *Academy of Management Perspectives*, *27*(2), 138-155.
Barney, J. B. (2001). Resource-based theories of competitive advantage: A ten-year retrospective on the resource-based view. *Journal of management*, *27*(6), 643-650.
Baron, R. M., & Kenny, D. A. (1986). The moderator–mediator variable distinction in social psychological research: Conceptual, strategic, and statistical considerations. *Journal of personality and social psychology*, *51*(6), 1173.
Barreto, I. (2010). Dynamic capabilities: A review of past research and an agenda for the future. *Journal of management*, *36*(1), 256-280.
Barroso, A. P., Machado, V. H., & Machado, V. C. (2011). Supply chain resilience using the mapping approach. *Supply chain management*, 161-184
Barton, H. (2000). *Sustainable communities: the potential for eco-neighbourhoods*. Earthscan.
Baumol, W. J. (1993). *Entrepreneurship, management, and the structure of payoffs* (p. 311). Cambridge, MA: MIT press.
Bechtsis, D., Tsolakis, N., Iakovou, E. and Vlachos, D., 2021. Data-driven secure, resilient and sustainable supply chains: gaps, opportunities, and a new generalised data sharing and data monetisation framework. *International Journal of Production Research*, pp.1-21.
Bechtsis, D., Tsolakis, N., Iakovou, E., & Vlachos, D. (2021). Data-driven secure, resilient and sustainable supply chains: gaps, opportunities, and a new generalised data sharing and data monetisation framework. *International Journal of Production Research*, 1-21.
Becker, G. 1964. *Human Capital*. New York: Columbia.
Becker, M. C. (2004). Organizational routines: a review of the literature. *Industrial and corporate change*, *13*(4), 643-678.
Beheshtian, A., Donaghy, K. P., Geddes, R. R., & Rouhani, O. M. (2017). Planning resilient motor-fuel supply chain. *International journal of disaster risk reduction*, *24*, 312-325.
Behm, M. (2005). Linking construction fatalities to the design for construction safety concept. *Safety science*, *43*(8), 589-611.
Bell, E., Bryman, A., & Harley, B. (2022). *Business research methods*. Oxford university press.
Benton, T., & Craib, I. (2001). Critical realism and the social sciences. *Philosophy of science: The foundations of philosophical thought*, 119-139.
Berman, S. L., Wicks, A. C., Kotha, S., & Jones, T. M. (1999). Does stakeholder orientation matter? The relationship between stakeholder management models and firm financial performance. *Academy of Management journal*, *42*(5), 488-506.
Beske, P. (2012). Dynamic capabilities and sustainable supply chain management. *International journal of physical distribution & logistics management*.
Beske, P., Land, A., & Seuring, S. (2014). Sustainable supply chain management practices and dynamic capabilities in the food industry: A critical analysis of the literature. *International journal of production economics*, *152*, 131-143.
Bessant, J., Kaplinsky, R., & Morris, M. (2003). Developing capability through learning networks. *International Journal of Technology Management & Sustainable Development*, *2*(1), 19-38.
Bhamra, R., Dani, S. & Burnard, K. (2011). Resilience: the concept, a literature review and future directions. *International Journal of Production Research*, *49*(18), pp.5375-5393.
Bhaskar, R. (1975). Forms of realism. *Philosophica*, *15*.
Bhupendra, K. V., & Sangle, S. (2017). What drives successful implementation of product stewardship strategy? The role of absorptive capability. *Corporate Social Responsibility and Environmental Management*, *24*(3), 186-198.
Biçer, I. (2015). Dual sourcing under heavy-tailed demand: an extreme value theory approach. *International Journal of Production Research*, *53*(16), 4979-4992.

Bird, M. M., & Clopton, S. W. (1977). A new look at scrap management. *Journal of Purchasing and Materials Management*, *13*(4), 20-28.
Blackburn, R., & Stokes, D. (2000). Breaking down the barriers: using focus groups to research small and medium-sized enterprises. *International Small Business Journal*, *19*(1), 44-67.
Blackhurst, J., Dunn, K. S., & Craighead, C. W. (2011). An empirically derived framework of global supply resiliency. *Journal of business logistics*, *32*(4), 374-391.
Bode, C., Wagner, S. M., Petersen, K. J., & Ellram, L. M. (2011). Understanding responses to supply chain disruptions: Insights from information processing and resource dependence perspectives. *Academy of Management Journal*, *54*(4), 833-8
Bollen, K. A. (1984). Multiple indicators: Internal consistency or no necessary relationship?. *Quality and Quantity*, *18*(4), 377-385.
Bollen, K. A. (1989). A new incremental fit index for general structural equation models. *Sociological methods & research*, *17*(3), 303-316.
Bollen, K. A., & Stine, R. (1990). Direct and indirect effects: Classical and bootstrap estimates of variability. *Sociological methodology*, 115-140.
Bollen, K., & Lennox, R. (1991). Conventional wisdom on measurement: A structural equation perspective. *Psychological bulletin*, *110*(2), 305.
Brandon-Jones E, Squire B, Autry CW, Petersen KJ. (2014). A contingent resource-based perspective of supply chain resilience and robustness. *Journal of Supply Chain Management*, 50(3), 55-73.
Braunscheidel, M. J., & Suresh, N. C. (2009). The organizational antecedents of a firm's supply chain agility for risk mitigation and response. *Journal of operations Management*, *27*(2), 119-140.
Brooks, C., Swainson, M., Beauchamp, I., Campelos, I., Ishak, R. and Martindale, W., 2021. Transformational Steam Infusion Processing for Resilient and Sustainable Food Manufacturing Businesses. *Foods*, *10*(8), p.1763.
Brown, R. L. (1997). Assessing specific mediational effects in complex theoretical models. *Structural Equation Modeling: A Multidisciplinary Journal*, *4*(2), 142-156.
Browne, M. W., & Cudeck, R. (1992). Alternative ways of assessing model fit. *Sociological methods & research*, *21*(2), 230-258.
Brusset, X., & Teller, C. (2017). Supply chain capabilities, risks, and resilience. *International Journal of Production Economics*, *184*, 59-68.
Burla, L., Knierim, B., Barth, J., Liewald, K., Duetz, M., & Abel, T. (2008). From text to codings: intercoder reliability assessment in qualitative content analysis. *Nursing research*, *57*(2), 113-117.
Burnard, K., & Bhamra, R. (2011). Organisational resilience: development of a conceptual framework for organisational responses. *International Journal of Production Research*, *49*(18), 5581-5599.
Business for social responsibility (BSR), 2007. Perspectives on Information Management in Sustainable Supply Chains. Available at 〈http://www.bsr.org/reports/ BSR_Info-Management-Supply-Chains1.pdf〉
Buzzao, G., & Rizzi, F. (2021). On the conceptualization and measurement of dynamic capabilities for sustainability: Building theory through a systematic literature review. *Business Strategy and the Environment*, *30*(1), 135-175.
Byrne, B. M. (2016). Structural equation modelling with AMOS: Basic concepts, applications, and programming.(3rd New Edition).
Cabral, I., Grilo, A., & Cruz-Machado, V. (2012). A decision-making model for lean, agile, resilient and green supply chain management. *International Journal of Production Research*, *50*(17), 4830-4845.
Caniato, F.F.A. and Rice, J., 2003. Building a secure and resilient supply chain.
Cardoso, S.R., Barbosa-Póvoa, A.P., Relvas, S. & Novais, A.Q. (2015). Resilience metrics in the assessment of complex supply-chains performance operating under demand uncertainty. *Omega*, *56*, pp.53-73.
Carson, D., & Coviello, N. (1996). Qualitative research issues at the marketing/entrepreneurship interface. *Marketing Intelligence & Planning*.
Carson, D., Gilmore, A., Perry, C., & Gronhaug, K. (2001). *Qualitative marketing research*. Sage.
Carter, C. R., & Carter, J. R. (1998). Interorganizational determinants of environmental purchasing: initial evidence from the consumer products industries. *Decision Sciences*, *29*(3), 659-684.
Carter, C. R., & Easton, P. L. (2011). Sustainable supply chain management: evolution and future directions. *International journal of physical distribution & logistics management*.
Carter, C. R., & Jennings, M. M. (2004). The role of purchasing in corporate social responsibility: a structural equation analysis. *Journal of business Logistics*, *25*(1), 145-186
Carter, C. R., & Rogers, D. S. (2008). A framework of sustainable supply chain management: moving toward new theory. *International journal of physical distribution & logistics management*.
Carvalho, H., Azevedo, S. G., & Cruz-Machado, V. (2012). Agile and resilient approaches to supply chain management: influence on performance and competitiveness. *Logistics research*, *4*(1), 49-62
Castañeda-Navarrete, J., Hauge, J., & López-Gómez, C. (2021). COVID-19's impacts on global value chains, as seen in the apparel industry. *Development Policy Review*, *39*(6), 953-970.
Cenfetelli, R. T., & Bassellier, G. (2009). Interpretation of formative measurement in information systems research. *MIS quarterly*, 689-707.

Chen, I. J., & Paulraj, A. (2004). Towards a theory of supply chain management: the constructs and measurements. *Journal of operations management*, *22*(2), 119-150.
Chen, M. C., Yang, T., & Li, H. C. (2007). Evaluating the supply chain performance of IT-based inter-enterprise collaboration. *Information & Management*, *44*(6), 524-534.
Cheng, J. H., Chen, M. C., & Huang, C. M. (2014). Assessing inter-organizational innovation performance through relational governance and dynamic capabilities in supply chains. *Supply Chain Management: An International Journal*.
Cheng, T. C. E., Yip, F. K., & Yeung, A. C. L. (2012). Supply risk management via guanxi in the Chinese business context: The buyer's perspective. *International Journal of Production Economics*, *139*(1), 3-13.
Cherrafi, A., Garza-Reyes, J. A., Kumar, V., Mishra, N., Ghobadian, A., & Elfezazi, S. (2018). Lean, green practices and process innovation: A model for green supply chain performance. *International Journal of Production Economics*, *206*, 79-92.
Cheung, G. W., & Rensvold, R. B. (2000). Assessing extreme and acquiescence response sets in cross-cultural research using structural equations modeling. *Journal of cross-cultural psychology*, *31*(2), 187-212.
Cheung, G. W., & Rensvold, R. B. (2002). Evaluating goodness-of-fit indexes for testing measurement invariance. *Structural equation modeling*, *9*(2), 233-255.
Chih, Y. Y., Hsiao, C. Y. L., Zolghadr, A., & Naderpajouh, N. (2022). Resilience of Organizations in the Construction Industry in the Face of COVID-19 Disturbances: Dynamic Capabilities Perspective. *Journal of Management in Engineering*, *38*(2), 04022002.
Child, D. (1990). *The essentials of factor analysis*. Cassell Educational.
Chin, W. W. (1998). The partial least squares approach to structural equation modeling. *Modern methods for business research*, 295(2), 295-336.
Chin, W. W. (2010). How to write up and report PLS analyses. In *Handbook of partial least squares* (pp. 655-690). Springer, Berlin, Heidelberg.
China, National Bureau of Statistics (2016) *China Energy Statistical Yearbook (2016)*, Beijing: National Bureau of Statistics.
China, National Bureau of Statistics (2017) *China Energy Statistical Yearbook (2017)*, Beijing: National Bureau of Statistics.
China, National Bureau of Statistics (2019) *China Energy Statistical Yearbook (2019)*, Beijing: National Bureau of Statistics.
Chopra, S. and Sodhi, M.S., 2004. Supply-chain breakdown. *MIT Sloan management review*, *46*(1), pp.53-61
Chopra, S., & Sodhi, M. S. (2004). Supply-chain breakdown. *MIT Sloan management review*, *46*(1), 53-61.
Chowdhury, M. M. H., & Quaddus, M. (2017). Supply chain resilience: Conceptualisation and scale development using dynamic capability theory. *International Journal of Production Economics*, *188*, 185-204.
Christopher, M. & Lee, H. (2004). Mitigating supply chain risk through improved confidence. *International journal of physical distribution & logistics management*.
Christopher, M. & Peck, H. (2004). Building the resilient supply chain.
Christopher, M. and Towill, D., 2001. An integrated model for the design of agile supply chains. *International Journal of Physical Distribution & Logistics Management*.
Christopher, M., & Holweg, M. (2011). "Supply Chain 2.0": Managing supply chains in the era of turbulence. *International journal of physical distribution & logistics management*, *41*(1), 63-82.
Christopher, M., & Towill, D. (2001). An integrated model for the design of agile supply chains. *International Journal of Physical Distribution & Logistics Management*.
Christopher, M., Lowson, R., & Peck, H. (2004). Creating agile supply chains in the fashion industry. *International Journal of Retail & Distribution Management*.
Ciliberti, F., Pontrandolfo, P., & Scozzi, B. (2008a). Investigating corporate social responsibility in supply chains: a SME perspective. *Journal of cleaner production*, *16*(15), 1579-1588.
Ciliberti, F., Pontrandolfo, P., & Scozzi, B. (2008b). Logistics social responsibility: Standard adoption and practices in Italian companies. *International Journal of Production Economics*, *113*(1), 88-106.
Closs, D. J., & McGarrell, E. F. (2004). *Enhancing security throughout the supply chain* (pp. 10-12). Washington, DC: IBM Center for the Business of Government.
Closs, D. J., Speier, C., & Meacham, N. (2011). Sustainability to support end-to-end value chains: the role of supply chain management. *Journal of the Academy of Marketing Science*, *39*(1), 101-116.
Coakes, S. J., Steed, L. G., Coakes, S. J., & Steed, L. G. (2003). Multiple response and multiple dichotomy analysis. *SPSS: analysis without anguish: Version 11.0 for Windows*, 215-224.
Cohen, M., Cui, S., Doetsch, S., Ernst, R., Huchzermeier, A., Kouvelis, P., ... & Tsay, A. A. (2022). Bespoke supply-chain resilience: the gap between theory and practice. *Journal of Operations Management*, *68*(5), 515-531.
Colicchia, C. and Strozzi, F., 2012. Supply chain risk management: a new methodology for a systematic literature review. *Supply Chain Management: An International Journal*.
Cooper, J. R. (1998). A multidimensional approach to the adoption of innovation. *Management decision.*
Cooper, J.R., 1998. A multidimensional approach to the adoption of innovation. *Management decision*.
Corbett, C. J., & Klassen, R. D. (2006). Extending the horizons: environmental excellence as key to improving operations. *Manufacturing & Service Operations Management*, *8*(1), 5-22.

Costello, A. B., & Osborne, J. (2005). Best practices in exploratory factor analysis: Four recommendations for getting the most from your analysis. *Practical assessment, research, and evaluation*, *10*(1), 7.
Craighead, C. W., Blackhurst, J., Rungtusanatham, M. J., & Handfield, R. B. (2007). The severity of supply chain disruptions: design characteristics and mitigation capabilities. *Decision Sciences*, *38*(1), 131-156.
Creswell, J. W. (2009). Mapping the field of mixed methods research. *Journal of mixed methods research*, *3*(2), 95-108.
Cretan, A., Coutinho, C., Bratu, B. and Jardim-Goncalves, R., 2012. NEGOSEIO: A framework for negotiations toward sustainable enterprise interoperability. *Annual Reviews in Control*, *36*(2), pp.291-299.
Crum, M., Poist, R., Carter, C. R., & Easton, P. L. (2011). Sustainable supply chain management: evolution and future directions. *International journal of physical distribution & logistics management*.
Cruz, J. M. (2009). The impact of corporate social responsibility in supply chain management: Multicriteria decision-making approach. *Decision Support Systems*, *48*(1), 224-236.
Cui, L., Jin, Z., Li, Y., & Wang, Y. (2022). Effects of control mechanisms on supply chain resilience and sustainability performance. *Australian Journal of Management*, 03128962211066532.
Currall, S. C., & Inkpen, A. C. (2002). A multilevel approach to trust in joint ventures. *Journal of international business studies*, *33*(3), 479-495.
Dadhich, P., Genovese, A., Kumar, N., & Acquaye, A. (2015). Developing sustainable supply chains in the UK construction industry: A case study. *International Journal of Production Economics*, *164*, 271-284.
Dangelico, R. M., Pujari, D., & Pontrandolfo, P. (2017). Green product innovation in manufacturing firms: A sustainability-oriented dynamic capability perspective. *Business strategy and the Environment*, *26*(4), 490-506.
Das, D. (2017). Development and validation of a scale for measuring Sustainable Supply Chain Management practices and performance. *Journal of Cleaner Production*, *164*, 1344-1362.
Das, D. (2018). The impact of Sustainable Supply Chain Management practices on firm performance: Lessons from Indian organizations. *Journal of cleaner production*, *203*, 179-196.
Davies, Z. G., Fuller, R. A., Loram, A., Irvine, K. N., Sims, V., & Gaston, K. J. (2009). A national scale inventory of resource provision for biodiversity within domestic gardens. *Biological Conservation*, *142*(4), 761-771.
de Lima, F. R. P., Da Silva, A. L., Godinho Filho, M., & Dias, E. M. (2018). Systematic review: resilience enablers to combat counterfeit medicines. *Supply Chain Management: An International Journal*.
de los Rios Berjillos, A., Ruiz Lozano, M., Tirado Valencia, P., & Carbonero Ruz, M. (2012). An approach to the relationship between the information about Spanish financial entities' social responsibility with respect to customers and their own corporate reputation. *Cuadernos de Economía y Dirección de la Empresa*, *15*(3), 130-140.
de Moura, G. B., & Saroli, L. G. (2020). Sustainable value chain management based on dynamic capabilities in small and medium-sized enterprises (SMEs). *The International Journal of Logistics Management*.
Defee, C. C., & Fugate, B. S. (2010). Changing perspective of capabilities in the dynamic supply chain era. *The International Journal of Logistics Management*.
Defee, C. C., & Fugate, B. S. (2010). Changing perspective of capabilities in the dynamic supply chain era. *The International Journal of Logistics Management*.
Deng, X., Doll, W. J., Al-Gahtani, S. S., Larsen, T. J., Pearson, J. M., & Raghunathan, T. S. (2008). A cross-cultural analysis of the end-user computing satisfaction instrument: A multi-group invariance analysis. *Information & Management*, *45*(4), 211-220.
DeVellis, R. F., & Thorpe, C. T. (2021). *Scale development: Theory and applications*. Sage publications.
Diamantopoulos, A., & Siguaw, J. A. (2006). Formative versus reflective indicators in organizational measure development: A comparison and empirical illustration. *British journal of management*, *17*(4), 263-282.
Diaz-Elsayed, N., Charkhgard, H. and Wang, M.C., 2020. Sustainable and Resilient Manufacturing for the Post–COVID-19 Era. *Smart and Sustainable Manufacturing Systems*, *4*(3).
Dillard, J. P. (2002). Structural equation modeling and the virtues of simplicity. In *M. Pfau (Chair), Structural equation modeling in mass communication. Symposium conducted at the annual meeting of the National Communication Association, New Orleans, Louisiana*.
Doll, W. J., Deng, X., & Scazzero, J. A. (2003). A process for post-implementation IT benchmarking. *Information & Management*, *41*(2), 199-212.
Doll, W. J., Xia, W., & Torkzadeh, G. (1994). A confirmatory factor analysis of the end-user computing satisfaction instrument. *MIS quarterly*, 453-461.
Donaldson, T., & Dunfee, T. W. (1999). Ties that bind: A social contracts approach to business ethics.
Donaldson, T., & Preston, L. E. (1995). The stakeholder theory of the corporation: Concepts, evidence, and implications. *Academy of management Review*, *20*(1), 65-91.
Duarte, A. P., Gomes, D. R., & das Neves, J. G. (2014). Tell me your socially responsible practices, I will tell you how attractive for recruitment you are! The impact of perceived CSR on organisational attractiveness. *Tékhne*, *12*, 22-29.
Dubey, R., Altay, N., Gunasekaran, A., Blome, C., Papadopoulos, T., & Childe, S. J. (2018). Supply chain agility, adaptability and alignment. *International Journal of Operations & Production Management*.
Dubois, A., & Gadde, L. E. (2002). Systematic combining: an abductive approach to case research. *Journal of business research*, *55*(7), 553-560.

Dyer, J. H., & Hatch, N. W. (2006). Relation-specific capabilities and barriers to knowledge transfers: creating advantage through network relationships. *Strategic management journal*, *27*(8), 701-719.
Eberl, M. (2004). Formative und reflektive Indikatoren im Forschungsprozess: Entscheidungsregeln und die Dominanz des reflektiven Modells. Inst. für Organisation, Seminar für Empirische Forschung und Quantitative Unternehmensplanung.
Edgeman, R. and Wu, Z., 2016. Supply chain criticality in sustainable and resilient enterprises. *Journal of Modelling in Management*.
Edum-Fotwe, F. T., Thorpe, A., & McCaffer, R. (2001). Information procurement practices of key actors in construction supply chains. *European journal of purchasing & supply management*, *7*(3), 155-164.
Edwards, J. R., & Bagozzi, R. P. (2000). On the nature and direction of relationships between constructs and measures. *Psychological methods*, *5*(2), 155.
Eisenhardt, K. M., & Martin, J. A. (2000). Dynamic capabilities: what are they?. *Strategic management journal*, *21*(10-11), 1105-1121.
Ekanayake, E.M.A.C., Shen, G., Kumaraswamy, M. and Owusu, E.K., 2021. A fuzzy synthetic evaluation of vulnerabilities affecting supply chain resilience of industrialized construction in Hong Kong. *Engineering, Construction and Architectural Management*.
Elf, P., Werner, A., & Black, S. (2022). Advancing the circular economy through dynamic capabilities and extended customer engagement: Insights from small sustainable fashion enterprises in the UK. *Business Strategy and the Environment*.
Elia, G., Margherita, A., Ciavolino, E., & Moustaghfir, K. (2021). Digital society incubator: combining exponential technology and human potential to build resilient entrepreneurial ecosystems. *Administrative Sciences*, *11*(3), 96.
Elia, Valerio, Maria Grazia Gnoni, and Fabiana Tornese. "Measuring circular economy strategies through index methods: A critical analysis." *Journal of cleaner production* 142 (2017): 2741-2751.
Elkington, J. (1998). Partnerships from cannibals with forks: The triple bottom line of 21st-century business. *Environmental quality management*, *8*(1), 37-51.
Eltantawy, R. (2016a). Towards sustainable supply management: requisite governance and resilience capabilities. *Journal of Strategic Marketing*, *24*(2), 118-130.
Eltantawy, R. A. (2016b). The role of supply management resilience in attaining ambidexterity: a dynamic capabilities approach. *Journal of Business & Industrial Marketing*.
Ely, A., Geall, S. and Song, Y., 2016. Sustainable maize production and consumption in China: practices and politics in transition. *Journal of Cleaner Production*, *134*, pp.259-268.
Elzarka, S., 2020. A study on using lean, agile, resilient and green index to assess the sustainability of Egyptian FMCGs supply chains. *International Journal of Logistics Systems and Management*, *37*(2), pp.285-298.
ence: An Alternative Dynamic Capabilities Perspective. *American Journal of Management*, *18*(4), pp.76-88.
Eriksson, E., Norrman, A., & Kembro, J. (2022). Understanding the transformation toward omnichannel logistics in grocery retail: a dynamic capabilities perspective. *International Journal of Retail & Distribution Management*.
Eriksson, T. (2014). Processes, antecedents and outcomes of dynamic capabilities. *Scandinavian journal of management*, *30*(1), 65-82.
Esfahbodi, A., Zhang, Y., & Watson, G. (2016). Sustainable supply chain management in emerging economies: Trade-offs between environmental and cost performance. *International Journal of Production Economics*, *181*, 350-366.
Esfahbodi, A., Zhang, Y., Watson, G., & Zhang, T. (2017). Governance pressures and performance outcomes of sustainable supply chain management–An empirical analysis of UK manufacturing industry. *Journal of cleaner production*, *155*, 66-78.
Esper, T. L. (2021). Supply chain management amid the coronavirus pandemic. *Journal of Public Policy & Marketing*, *40*(1), 101-102.
Esty, D. C., & Winston, A. (2009). *Green to gold: How smart companies use environmental strategy to innovate, create value, and build competitive advantage*. John Wiley & Sons.
Fabrigar, L. R., & Wegener, D. T. (2011). *Exploratory factor analysis*. Oxford University Press.
Fabrigar, L. R., Wegener, D. T., MacCallum, R. C., & Strahan, E. J. (1999). Evaluating the use of exploratory factor analysis in psychological research. *Psychological methods*, *4*(3), 272.
Fahimnia, B. and Jabbarzadeh, A., 2016. Marrying supply chain sustainability and resilience: A match made in heaven. *Transportation Research Part E: Logistics and Transportation Review*, *91*, pp.306-324.
Faisal, M. N. (2010). Sustainable supply chains: a study of interaction among the enablers. *Business Process Management Journal*.
Faisal, M. N., Banwet, D. K., & Shankar, R. (2006). Supply chain risk mitigation: modeling the enablers. *Business Process Management Journal*.
Falasca, M., Zobel, C. W., & Cook, D. (2008, May). A decision support framework to assess supply chain resilience. In *Proceedings of the 5th International ISCRAM Conference* (pp. 596-605).
Fazli-Khalaf, M., Naderi, B., Mohammadi, M. and Pishvaee, M.S., 2021. The design of a resilient and sustainable maximal covering closed-loop supply chain network under hybrid uncertainties: a case study in tire industry. *Environment, Development and Sustainability*, *23*(7), pp.9949-9973.

Feizpour, M. A., & Shahmohammadi Mehrjardi, A. (2014). Comparative advantages and sustainable development in iranian manufacturing industries. *Iranian Economic Review*, *18*(1), 33-52.
Felsberger, A., Qaiser, F. H., Choudhary, A., & Reiner, G. (2022). The impact of Industry 4.0 on the reconciliation of dynamic capabilities: Evidence from the European manufacturing industries. *Production Planning & Control*, *33*(2-3), 277-300.
Font, X., Tapper, R., Schwartz, K., & Kornilaki, M. (2008). Sustainable supply chain management in tourism. *Business strategy and the environment*, *17*(4), 260-271.
Fornell, C., & Larcker, D. F. (1981). Structural equation models with unobservable variables and measurement error: Algebra and statistics.
Forza, C. (2002). Survey research in operations management: a process-based perspective. *International journal of operations & production management*.
Foss, N. J., & Pederson, T. (2016). Microfoundations in strategy. *Strategic Management Journal*, *37*(13), 22-34
Fox, J. (1980). Effect analysis in structural equation models: Extensions and simplified methods of computation. *Sociological Methods & Research*, *9*(1), 3-28.
Frohlich, M. T., & Westbrook, R. (2001). Arcs of integration: an international study of supply chain strategies. *Journal of operations management*, *19*(2), 185-200.
Fugate, B. S., Stank, T. P., & Mentzer, J. T. (2009). Linking improved knowledge management to operational and organizational performance. *Journal of Operations Management*, *27*(3), 247-264.
Gagnon, B., Leduc, R., & Savard, L. (2012). From a conventional to a sustainable engineering design process: different shades of sustainability. *Journal of Engineering Design*, *23*(1), 49-74.
Gambatese, J. A., Behm, M., & Hinze, J. W. (2005). Viability of designing for construction worker safety. *Journal of construction engineering and management*, *131*(9), 1029-1036.
Gaonkar, R. S., & Viswanadham, N. (2007). Analytical framework for the management of risk in supply chains. *IEEE Transactions on automation science and engineering*, *4*(2), 265-273
Garza-Reyes, J. A., Kumar, V., Lim, M. K., Antony, J. & Tiwari, M. K. (2019) 'Interventions for Delivering the Triple-Bottom-Line', *Production Planning and Control*, vol. 30, no. 5–6, pp. 347–352.
Gaskin, J. (2012) Data Screening, Gaskination's StatWiki. [online] available from <http://statwiki.kolobkreations.com> [12/2022]
Gebauer, H. (2011). Exploring the contribution of management innovation to the evolution of dynamic capabilities. *Industrial Marketing Management*, *40*(8), 1238-1250.
Gefen, D., Straub, D., & Boudreau, M. C. (2000). Structural equation modeling and regression: Guidelines for research practice. *Communications of the association for information systems*, *4*(1), 7.
GEMI–Global Environmental Management Initiative. (2001). New paths to business value. *GEMI, Washington, DC*.
Geng, J., Long, R., Chen, H., & Li, W. (2017). Exploring the motivation-behavior gap in urban residents' green travel behavior: A theoretical and empirical study. *Resources, Conservation and Recycling*, *125*, 282-292.
Ghadimi, P., Wang, C. and Lim, M.K., 2019. Sustainable supply chain modeling and analysis: Past debate, present problems and future challenges. *Resources, conservation and recycling*, *140*, pp.72-84.
Ghauri, P. G., & Gronhaug, K. (2002). K.(2005) Research methods in business studies: A practical guide. *Essex: Pearson education limited*.
Giannakis, M. & Papadopoulos, T. (2016). Supply chain sustainability: A risk management approach. *International Journal of Production Economics*, *171*, pp.455-470.
Giddings, B., Hopwood, B., & O'brien, G. (2002). Environment, economy and society: fitting them together into sustainable development. *Sustainable development*, *10*(4), 187-196.
Giunipero, L. C., Hooker, R. E., Joseph-Matthews, S. A. C. H. A., Yoon, T. E., & Brudvig, S. (2008). A decade of SCM literature: past, present and future implications. *Journal of supply chain management*, *44*(4), 66-86.
Giuntini, R., & Andel, T. (1995). ADVANCE WITH REVERSE LOGISTICS. *Transportation & Distribution*.
Gligor, D. M., & Holcomb, M. C. (2012). Antecedents and consequences of supply chain agility: establishing the link to firm performance. *Journal of Business Logistics*, *33*(4), 295-308.
Goh, C. S., Chong, H. Y., Jack, L., & Faris, A. F. M. (2020). Revisiting triple bottom line within the context of sustainable construction: A systematic review. *Journal of Cleaner Production*, *252*, 119884.
Gold, A. (2010). Data curation and libraries: Short-term developments, long-term prospects.
Gold, S., Seuring, S. & Beske, P. (2010). Sustainable supply chain management and inter-organisational resources: a literature review. *Corporate social responsibility and environmental management*, *17*(4), 230-245.
Gölgeci, I., & Ponomarov, S. Y. (2015). How does firm innovativeness enable supply chain resilience? The moderating role of supply uncertainty and interdependence. *Technology Analysis & Strategic Management*, *27*(3), 267-282.
Golini, R., Moretto, A., Caniato, F., Caridi, M. and Kalchschmidt, M., 2017. Developing sustainability in the Italian meat supply chain: an empirical investigation. *International Journal of Production Research*, *55*(4), pp.1183-1209.
González-Benito, J., & González-Benito, Ó. (2005). Environmental proactivity and business performance: an empirical analysis. *Omega*, *33*(1), 1-15.

Govindan, K. and Gholizadeh, H., 2021. Robust network design for sustainable-resilient reverse logistics network using big data: A case study of end-of-life vehicles. *Transportation Research Part E: Logistics and Transportation Review*, *149*, p.102279.
Govindan, K., Azevedo, S. G., Carvalho, H., & Cruz-Machado, V. (2014). Impact of supply chain management practices on sustainability. *Journal of Cleaner production*, *85*, 212-225.
Govindan, K., Azevedo, S. G., Carvalho, H., & Cruz-Machado, V. (2015). Lean, green and resilient practices influence on supply chain performance: interpretive structural modeling approach. *International Journal of Environmental Science and Technology*, *12*(1), 15-34.
Govindan, K., Jafarian, A., Azbari, M. E., & Choi, T. M. (2015). Optimal bi-objective redundancy allocation for systems reliability and risk management. *IEEE Transactions on Cybernetics*, *46*(8), 1735-1748.
Govindan, K., Soleimani, H., & Kannan, D. (2015). Reverse logistics and closed-loop supply chain: A comprehensive review to explore the future. *European journal of operational research*, *240*(3), 603-626.
Grant, D.B., Wong, C.Y. and Trautrims, A., 2017. *Sustainable logistics and supply chain management: principles and practices for sustainable operations and management*. Kogan Page Publishers.
Grant, R. M. (1991). The resource-based theory of competitive advantage: implications for strategy formulation. *California management review*, *33*(3), 114-135.
Grant, R. M., & Jordan, J. J. (2015). *Foundations of strategy*. John Wiley & Sons.
Gray, R., Owen, D., & Adams, C. (1996). *Accounting & accountability: changes and challenges in corporate social and environmental reporting*. Prentice Hall.
Green Jr, K. W., Whitten, D., & Inman, R. A. (2007). The impact of timely information on organisational performance in a supply chain. *Production Planning & Control*, *18*(4), 274-282.
Green, K. W., Zelbst, P. J., Bhadauria, V. S., & Meacham, J. (2012). Do environmental collaboration and monitoring enhance organisational performance?. *Industrial Management & Data Systems*.
Gregorich, S. E. (2006). Do self-report instruments allow meaningful comparisons across diverse population groups? Testing measurement invariance using the confirmatory factor analysis framework. *Medical care*, *44*(11 Suppl 3), S78.
Gualandris, J., & Kalchschmidt, M. (2014). Customer pressure and innovativeness: Their role in sustainable supply chain management. *Journal of Purchasing and Supply Management*, *20*(2), 92-103.
Guan, L., Abbasi, A. & Ryan, M.J. (2020). Analysing green building project risk interdependencies using Interpretive Structural Modeling. *Journal of Cleaner Production*, *256*, 120372.
Gunasekaran, A., Patel, C., & McGaughey, R. E. (2004). A framework for supply chain performance measurement. *International journal of production economics*, *87*(3), 333-347.
Gunderson, L. H. (2000). Ecological resilience—in theory and application. *Annual review of ecology and systematics*, *31*(1), 425-439.
Guoping, C., & Xinqiu, Z. (2010, December). Research on supply chain resilience evaluation. In *Proceedings of the 7th International Conference on Innovation & Management* (pp. 1558-1562).
Gupta, S., & Palsule-Desai, O. D. (2011). Sustainable supply chain management: Review and research opportunities. *IIMB Management Review*, *23*(4), 234-245.
Gwaka, L. and Dubihlela, J., 2020. The resilience of smallholder livestock farmers in sub-saharan africa and the risks imbedded in rural livestock systems. *Agriculture*, *10*(7), p.270.
Haake, H., & Seuring, S. (2009). Sustainable procurement of minor items–exploring limits to sustainability. *Sustainable development*, *17*(5), 284-294.
Hafez, F. S., Sa'di, B., Safa-Gamal, M., Taufiq-Yap, Y. H., Alrifaey, M., Seyedmahmoudian, M., ... & Mekhilef, S. (2023). Energy efficiency in sustainable buildings: a systematic review with taxonomy, challenges, motivations, methodological aspects, recommendations, and pathways for future research. *Energy Strategy Reviews*, *45*, 101013.
Hair Jr, J. F., Hult, G. T. M., Ringle, C. M., & Sarstedt, M. (2021). *A primer on partial least squares structural equation modeling (PLS-SEM)*. Sage publications.
Hair Jr, J. F., Matthews, L. M., Matthews, R. L., & Sarstedt, M. (2017). PLS-SEM or CB-SEM: updated guidelines on which method to use. *International Journal of Multivariate Data Analysis*, *1*(2), 107-123.
Hair, J. F., Black, W. C., Babin, B. J., & Anderson, R. E. (2018). Multivariate data analysis Eighth Edition.
Halldórsson, Á., Kotzab, H., & Skjøtt-Larsen, T. (2009). Supply chain management on the crossroad to sustainability: a blessing or a curse?. *Logistics Research*, *1*(2), 83-94.
Hammervoll, T., Jensen, L.M. & Beske, P. (2012). Dynamic capabilities and sustainable supply chain management. *International journal of physical distribution & logistics management*.
Hargadon, A. B. (2002). Brokering knowledge: Linking learning and innovation. *Research in Organizational behavior*, *24*, 41-85.
Harms, D., Hansen, E. G., & Schaltegger, S. (2013). Strategies in sustainable supply chain management: an empirical investigation of large German companies. *Corporate social responsibility and environmental management*, *20*(4), 205-218.
Hart, S. L. (1995). A natural-resource-based view of the firm. *Academy of management review*, *20*(4), 986-1014.
Hart, S. L., & Milstein, M. B. (1999). Global sustainability and the creative destruction of industries. *MIT Sloan Management Review*, *41*(1), 23.

Hasan, M. M. (2018). Organization capital and firm life cycle. *Journal of Corporate Finance*, *48*, 556-578.
Hasani, A., & Khosrojerdi, A. (2016). Robust global supply chain network design under disruption and uncertainty considering resilience strategies: A parallel memetic algorithm for a real-life case study. *Transportation Research Part E: Logistics and Transportation Review*, *87*, 20-52.
Hassini, E., Surti, C., & Searcy, C. (2012). A literature review and a case study of sustainable supply chains with a focus on metrics. *International Journal of Production Economics*, *140*(1), 69-82.
Hawass, H. H. (2010). Exploring the determinants of the reconfiguration capability: a dynamic capability perspective. *European Journal of Innovation Management*, *13*(4), 409-438.
Hawkins, D. P., & Wiebe, R. A. (2004, December). Timescale for incremental construction of the Silurian Vinalhaven intrusive complex, coastal Maine, USA. In *AGU Fall Meeting Abstracts* (Vol. 2004, pp. V52B-06).
Hayes, A. F. (2009). Beyond Baron and Kenny: Statistical mediation analysis in the new millennium. *Communication monographs*, *76*(4), 408-420.
He, Y., Kvan, T., Liu, M., & Li, B. (2018). How green building rating systems affect designing green. *Building and Environment*, *133*, 19-31.
Heaton, R., Martin, H., Chadee, A., Milling, A., Dunne, S., & Borthwick, F. (2022). The Construction Materials Conundrum: Practical Solutions to Address Integrated Supply Chain Complexities. *Journal of Construction Engineering and Management*, *148*(8), 04022071.
Helfat, C. E. (1997). Know-how and asset complementarity and dynamic capability accumulation: the case of R&D. *Strategic management journal*, *18*(5), 339-360.
Helfat, C. E., & Peteraf, M. A. (2009). Understanding dynamic capabilities: progress along a developmental path.
Hendricks, K.B. & Singhal, V.R. (2005). An empirical analysis of the effect of supply chain disruptions on long-run stock price performance and equity risk of the firm. *Production and Operations management*, *14*(1), 35-52.
Hernández-Linares, R., Kellermanns, F. W., & López-Fernández, M. C. (2020). Dynamic capabilities and SME performance: The moderating effect of market orientation. *Journal of Small Business Management*, 1-34.
Hervani, A.A., Nandi, S., Helms, M.M. and Sarkis, J., 2022. A performance measurement framework for socially sustainable and resilient supply chains using environmental goods valuation methods. *Sustainable Production and Consumption*, *30*, pp.31-52.
Hill, T., & Hill, A. (2017). *Operations strategy: design, implementation and delivery*. Bloomsbury Publishing.
Hinze, J., & Wiegand, F. (1992). Role of designers in construction worker safety. *Journal of construction engineering and management*, *118*(4), 677-684.
Hittle, B., & Leonard, K. M. (2011). Decision making in advance of a supply chain crisis. *Management Decision*, *49*(7), 1182-1193.
Hofmann, H., Busse, C., Bode, C. & Henke, M. (2014). Sustainability-related supply chain risks: Conceptualisation and management. *Business Strategy and the Environment*, *23*(3),160-172.
Holbert, R. L., & Stephenson, M. T. (2003). The importance of indirect effects in media effects research: Testing for mediation in structural equation modeling. *Journal of broadcasting & electronic media*, *47*(4), 556-572.
Hollnagel, E., Woods, D.D. and Leveson, N. eds., 2006. *Resilience engineering: Concepts and precepts*. Ashgate Publishing, Ltd..
Hong, J. F., & Easterby-Smith, M. (2002, April). Transfer of organizational learning practices. In *Third European Conference on Organizational Knowledge, Learning and Capabilities. Athens April* (pp. 5-6).
Hong, J., Zhang, Y., & Ding, M. (2018). Sustainable supply chain management practices, supply chain dynamic capabilities, and enterprise performance. *Journal of cleaner production*, *172*, 3508-3519.
Hosseini-Motlagh, S. M., Samani, M. R. G., & Shahbazbegian, V. (2020). Innovative strategy to design a mixed resilient-sustainable electricity supply chain network under uncertainty. *Applied Energy*, *280*, 115921.
Hosseini, S., Barker, K., & Ramirez-Marquez, J. E. (2016). A review of definitions and measures of system resilience. *Reliability Engineering & System Safety*, *145*, 47-61.
Hosseini, S., Ivanov, D. & Dolgui, A. (2019). Review of quantitative methods for supply chain resilience analysis. *Transportation Research Part E: Logistics and Transportation Review*, *125*, 285-307.
Hosseinifard, Z. and Abbasi, B., 2018. The inventory centralization impacts on sustainability of the blood supply chain. *Computers & Operations Research*, *89*, pp.206-212.
Hsieh, H. F., & Shannon, S. E. (2005). Three approaches to qualitative content analysis. *Qualitative health research*, *15*(9), 1277-1288.
Hsu, C.H., Chang, A.Y., Zhang, T.Y., Lin, W.D. and Liu, W.L., 2021. Deploying Resilience Enablers to Mitigate Risks in Sustainable Fashion Supply Chains. *Sustainability*, *13*(5), p.2943.
Hu, J., Liu, Y. L., Yuen, T. W. W., Lim, M. K., & Hu, J. (2019). Do green practices really attract customers? The sharing economy from the sustainable supply chain management perspective. *Resources, Conservation and Recycling*, *149*, 177-187.
Hu, Y. J., Yang, Y. F., & Islam, M. (2010). Leadership behavior, satisfaction, and the balanced scorecard approach: An empirical investigation of the manager-employee relationship at retail institutions in Taiwan. *International Journal of Commerce and Management*.
Huang, X., & Hinze, J. (2006). Owner's role in construction safety. *Journal of construction engineering and management*, *132*(2), 164-173.

Hung, R. Y. Y., Yang, B., Lien, B. Y. H., McLean, G. N., & Kuo, Y. M. (2010). Dynamic capability: Impact of process alignment and organisational learning culture on performance. *Journal of world business*, *45*(3), 285-294.
Hutchins, M. J., & Sutherland, J. W. (2008). An exploration of measures of social sustainability and their application to supply chain decisions. *Journal of cleaner production*, *16*(15), 1688-1698.
Hwang, B.G., Shan, M. & Supa'at, N.N.B. (2017). Green commercial building projects in Singapore: Critical risk factors and mitigation measures. *Sustainable cities and Society*, *30*, 237-247.
Hwang, B.G., Zhao, X., See, Y.L. & Zhong, Y. (2015). Addressing risks in green retrofit projects: The case of Singapore. *Project Management Journal*, *46*(4), 76-89.
Iansiti, M., & Clark, K. B. (1994). Integration and dynamic capability: evidence from product development in automobiles and mainframe computers. *Industrial and corporate change*, *3*(3), 557-605.
Imperatives, S. (1987). Report of the World Commission on Environment and Development: Our common future.
Inoue, Y., & Lee, S. (2011). Effects of different dimensions of corporate social responsibility on corporate financial performance in tourism-related industries. *Tourism management*, *32*(4), 790-804.
Isnaini, D. B. Y., Nurhaida, T., & Pratama, I. (2020). Moderating Effect of Supply Chain Dynamic Capabilities on the Relationship of Sustainable Supply Chain Management Practices and Organizational Sustainable Performance: A Study on the Restaurant Industry in Indonesia. *International Journal of Supply Chain Management (IJSCM)*, *9*(1), 97-105.
Ivanov, D. (2018). Revealing interfaces of supply chain resilience and sustainability: a simulation study. *International Journal of Production Research*, *56*(10), 3507-3523.
Ivanov, D. (2020). Viable supply chain model: integrating agility, resilience and sustainability perspectives—lessons from and thinking beyond the COVID-19 pandemic. *Annals of Operations Research*, 1.
Ivanov, D. & Dolgui, A. (2020). Viability of intertwined supply networks: extending the supply chain resilience angles towards survivability. A position paper motivated by COVID-19 outbreak. *International Journal of Production Research*, *58*(10), pp.2904-2915.
Ivanov, D., & Sokolov, B. (2013). Control and system-theoretic identification of the supply chain dynamics domain for planning, analysis and adaptation of performance under uncertainty. *European Journal of Operational Research*, *224*(2), 313-323.
Ivanov, D., Dolgui, A., Sokolov, B., & Ivanova, M. (2017). Literature review on disruption recovery in the supply chain. *International Journal of Production Research*, *55*(20), 6158-6174
Jabbarzadeh, A., Fahimnia, B. & Sabouhi, F. (2018). Resilient and sustainable supply chain design: sustainability analysis under disruption risks. *International Journal of Production Research*, *56*(17), 5945-5968.
Jabbarzadeh, A., Fahimnia, B. & Sheu, J.B. (2017). An enhanced robustness approach for managing supply and demand uncertainties. *International Journal of Production Economics*, *183*, 620-631.
Jabbarzadeh, A., Fahimnia, B. and Sabouhi, F., 2018. Resilient and sustainable supply chain design: sustainability analysis under disruption risks. *International Journal of Production Research*, *56*(17), pp.5945-5968.
Jabbarzadeh, A., Fahimnia, B., Sheu, J.B. and Moghadam, H.S., 2016. Designing a supply chain resilient to major disruptions and supply/demand interruptions. *Transportation Research Part B: Methodological*, *94*, pp.121-149.
Jabbarzadeh, A., Haughton, M. & Khosrojerdi, A. (2018). Closed-loop supply chain network design under disruption risks: A robust approach with real world application. *Computers & Industrial Engineering*, *116*, 178-191.
Jarvis, C. B., MacKenzie, S. B., & Podsakoff, P. M. (2003). A critical review of construct indicators and measurement model misspecification in marketing and consumer research. *Journal of consumer research*, *30*(2), 199-218.
Jarzabkowski, P., & Paul Spee, A. (2009). Strategy-as-practice: A review and future directions for the field. *International journal of management reviews*, *11*(1), 69-95.
Jayaram, J., & Avittathur, B. (2015). Green supply chains: A perspective from an emerging economy. *International Journal of Production Economics*, *164*, 234-244.
Jayaram, J., & Avittathur, B. (2015). Green supply chains: A perspective from an emerging economy. *International Journal of Production Economics*, *164*, 234-244.
Jensen, P.D. and Orfila, C., 2021. Mapping the production-consumption gap of an urban food system: an empirical case study of food security and resilience. *Food security*, *13*(3), pp.551-570.
Johnson, P. F., & Leenders, M. R. (1997). Make-or-buy alternatives in plant disposition strategies. *International Journal of Purchasing and Materials Management*, *33*(1), 20-26.
Jorgensen, A. L., & Knudsen, J. S. (2006). Sustainable competitiveness in global value chains: how do small Danish firms behave?. *Corporate Governance: The international journal of business in society*, *6*(4), 449-462.
Judd, C. M., & Kenny, D. A. (1981). Process analysis: Estimating mediation in treatment evaluations. *Evaluation review*, *5*(5), 602-619.
Jumadi, H., & Zailani, S. (2010). Integrating green innovations in logistics services towards logistics service sustainability: a conceptual paper. *Environmental Research Journal*, *4*(4), 261-271.
Jüttner, U. (2005). Supply chain risk management: Understanding the business requirements from a practitioner perspective. *The international journal of logistics management*.
Jüttner, U., & Maklan, S. (2011). Supply chain resilience in the global financial crisis: an empirical study. *Supply chain management: An international journal*, *16*(4), 246-259.

Jüttner, U., Peck, H., & Christopher, M. (2003). Supply chain risk management: outlining an agenda for future research. *International Journal of Logistics: Research and Applications*, *6*(4), 197-210.
Kacperczyk, A. (2009). With greater power comes greater responsibility. Takeover protection and corporate attention to stakeholders. *Strategic Management Journal*, *30*(3), 261-285.
Kähkönen, A. K., Lintukangas, K., & Hallikas, J. (2018). Sustainable supply management practices: making a difference in a firm's sustainability performance. *Supply Chain Management: An International Journal*.
Kaiser, H. F. (1974). An index of factorial simplicity. *psychometrika*, *39*(1), 31-36.
Kamalahmadi, M., & Parast, M. M. (2016). A review of the literature on the principles of enterprise and supply chain resilience: Major findings and directions for future research. *International Journal of Production Economics*, *171*, 116-133.
Kang, S. H., Kang, B., Shin, K., Kim, D., & Han, J. (2012). A theoretical framework for strategy development to introduce sustainable supply chain management. *Procedia-Social and Behavioral Sciences*, *40*, 631-635.
Kaur, H. and Singh, S.P., 2019. Sustainable procurement and logistics for disaster resilient supply chain. *Annals of Operations Research*, *283*(1), pp.309-354.
Kayikci, Y., 2020. Stream processing data decision model for higher environmental performance and resilience in sustainable logistics infrastructure. *Journal of Enterprise Information Management*.
Kent, J. L., & Mentzer, J. T. (2003). The effect of investment in interorganizational information technology in a retail supply chain. *Journal of Business Logistics*, *24*(2), 155-175.
Kern, D., Moser, R., Hartmann, E., & Moder, M. (2012). Supply risk management: model development and empirical analysis. *International Journal of Physical Distribution & Logistics Management*.
Ki-moon, B. (2010). *The United Nations global compact: Achievements, trends and challenges*. Cambridge University Press.
Kim, Y. H., & Henderson, D. (2015). Financial benefits and risks of dependency in triadic supply chain relationships. *Journal of Operations Management*, *36*, 115-129.
Klein, K. J., Dansereau, F., & Hall, R. J. (1994). Levels issues in theory development, data collection, and analysis. *Academy of Management review*, *19*(2), 195-229.
Kleindorfer, P.R., Singhal, K. & Van Wassenhove, L.N. (2005). Sustainable operations management. *Production and operations management*, *14*(4), 482-492.
Kline, R. B. (2015). *Principles and practice of structural equation modeling*. Guilford publications.
Kogler, C. and Rauch, P., 2019. A discrete-event simulation model to test multimodal strategies for a greener and more resilient wood supply. *Canadian Journal of Forest Research*, *49*(10), pp.1298-1310.
Kogut, B., & Zander, U. (1996). What firms do? Coordination, identity, and learning. *Organisation science*, *7*(5), 502-518.
Kong, Q. (2023). Emerging International Rules on Fair Trade and Their Revelation for Reform of State-Owned Enterprises in China. In *State and Enterprise: Legal Issues in the Global Market* (pp. 387-399). Cham: Springer International Publishing.
Kor, Y. Y., & Mahoney, J. T. (2005). How dynamics, management, and governance of resource deployments influence firm-level performance. *Strategic Management Journal*, *26*(5), 489-496.
Kortmann, S., Gelhard, C., Zimmermann, C., & Piller, F. T. (2014). Linking strategic flexibility and operational efficiency: The mediating role of ambidextrous operational capabilities. *Journal of Operations Management*, *32*(7-8), 475-490.
Kotrlik, J. W. K. J. W., & Higgins, C. C. H. C. C. (2001). Organizational research: Determining appropriate sample size in survey research appropriate sample size in survey research. *Information technology, learning, and performance journal*, *19*(1), 43.
Kouvelis, P., Dong, L., Boyabatli, O. & Li, R. (2011). *Handbook of integrated risk management in global supply chains* (Vol. 1). John Wiley & Sons.
Kovács, G., & Spens, K. M. (2005). Abductive reasoning in logistics research. *International journal of physical distribution & logistics management*.
Krueger, R. A. (2014). *Focus groups: A practical guide for applied research*. Sage publications.
Kucukusta, D., Mak, A., & Chan, X. (2013). Corporate social responsibility practices in four and five-star hotels: Perspectives from Hong Kong visitors. *International Journal of Hospitality Management*, *34*, 19-30.
Kuei, C. H., Madu, C. N., Chow, W. S., & Chen, Y. (2015). Determinants and associated performance improvement of green supply chain management in China. *Journal of cleaner production*, *95*, 163-173.
Kumar, D., & Rahman, Z. (2016). Buyer supplier relationship and supply chain sustainability: empirical study of Indian automobile industry. *Journal of Cleaner Production*, *131*, 836-848.
Kumar, G., Subramanian, N., & Arputham, R. M. (2018). Missing link between sustainability collaborative strategy and supply chain performance: Role of dynamic capability. *International Journal of Production Economics*, *203*, 96-109.
Kumar, V., Leone, R. P., Aaker, D. A., & Day, G. S. (2018). *Marketing research*. John Wiley & Sons.
Kurnia, S., Rahim, M. M., Samson, D., & Prakash, S. (2014). Sustainable supply chain management capability maturity: Framework development and initial evaluation.
Kurzhals, K. (2021). Qualitative Research: Model and Hypotheses Refinement. In *Resource Recombination in Firms from a Dynamic Capability Perspective* (pp. 145-176). Springer Gabler, Wiesbaden.

Kurzhals, K. (2021). *Resource recombination in firms from a dynamic capability perspective*. Springer Fachmedien Wiesbaden GmbH.
Kwak, D.W., Seo, Y.J. and Mason, R., 2018. Investigating the relationship between supply chain innovation, risk management capabilities and competitive advantage in global supply chains. *International Journal of Operations & Production Management*.
Lai, C. S., Chiu, C. J., Yang, C. F., & Pai, D. C. (2010). The effects of corporate social responsibility on brand performance: The mediating effect of industrial brand equity and corporate reputation. *Journal of business ethics*, *95*(3), 457-469.
Lai, K. H., & Cheng, T. E. (2005). Effects of quality management and marketing on organisational performance. Journal of Business research, 58(4), 446-456.
Lai, K. H., & Cheng, T. E. (2016). *Just-in-time logistics*. CRC Press.
Lai, K. H., Cheng, T. C. E., & Tang, A. K. (2010). Green retailing: factors for success. *California Management Review*, *52*(2), 6-31.
Lai, K. H., Wong, C. W., & Cheng, T. C. E. (2012). Ecological modernisation of Chinese export manufacturing via green logistics management and its regional implications. *Technological Forecasting and Social Change*, *79*(4), 766-770.
Lai, K. H., Wu, S. J., & Wong, C. W. (2013). Did reverse logistics practices hit the triple bottom line of Chinese manufacturers?. *International Journal of Production Economics*, *146*(1), 106-117.
Lai, V. S., & Li, H. (2005). Technology acceptance model for internet banking: an invariance analysis. *Information & management*, *42*(2), 373-386.
Lakshmimeera, B. L., & Palanisamy, C. (2013). A conceptual framework on green supply chain management practices. *Industrial Engineering Letters*, *3*(10).
Lambert, D. M., Cooper, M. C., & Pagh, J. D. (1998). Supply chain management: implementation issues and research opportunities. *The international journal of logistics management*, *9*(2), 1-20.
Laosirihongthong, T., Adebanjo, D., & Tan, K. C. (2013). Green supply chain management practices and performance. *Industrial Management & Data Systems*.
Laseter, T. M., & Gillis, N. (2012). Collaborating for a more sustainable supply chain. *Supply Chain Management Review*, *16*(5), 43-49.
Lee, H. L., & Whang, S. (2000). Information sharing in a supply chain. *International Journal of Manufacturing Technology and Management*, *1*(1), 79-93.
Lee, H. L., Padmanabhan, V., & Whang, S. (1997). Information distortion in a supply chain: The bullwhip effect. *Management science*, *43*(4), 546-558.
Lee, H. L., Padmanabhan, V., & Whang, S. (1997). The bullwhip effect in supply chains. *Sloan management review*, *38*, 93-102.
Lee, K. L., Nawanir, G., Cheng, J. K., Alzoubi, H. M., & Alshurideh, M. (2023). Educational Supply Chain Management: A View on Professional Development Success in Malaysia. In *The Effect of Information Technology on Business and Marketing Intelligence Systems* (pp. 2473-2490). Cham: Springer International Publishing.
Lee, S. M., & Rha, J. S. (2016). Ambidextrous supply chain as a dynamic capability: building a resilient supply chain. *Management Decision*.
Lei, M., & Lomax, R. G. (2005). The effect of varying degrees of nonnormality in structural equation modeling. *Structural equation modeling*, *12*(1), 1-27.
Leuschner, R., Rogers, D. S., & Charvet, F. F. (2013). A meta-analysis of supply chain integration and firm performance. *Journal of Supply Chain Management*, *49*(2), 34-57.
Levesque, P. (2012). Building resilience and sustainability into the Chinese supply chain. *The Shipping Point: The Rise of China and The Future of Retail Supply Chain Management*, 135-161.
Li, C.Z., Chen, Z., Xue, F., Kong, X.T., Xiao, B., Lai, X. and Zhao, Y., 2021. A blockchain-and IoT-based smart product-service system for the sustainability of prefabricated housing construction. *Journal of Cleaner Production*, *286*, p.125391.
Li, D. Y., & Liu, J. (2014). Dynamic capabilities, environmental dynamism, and competitive advantage: Evidence from China. *Journal of Business Research*, *67*(1), 2793-2799.
Li, S., Ragu-Nathan, B., Ragu-Nathan, T. S., & Rao, S. S. (2006). The impact of supply chain management practices on competitive advantage and organizational performance. *Omega*, *34*(2), 107-124.
Lim, M. K., Li, Y., Wang, C., & Tseng, M. L. (2021). A literature review of blockchain technology applications in supply chains: A comprehensive analysis of themes, methodologies and industries. *Computers & Industrial Engineering*, *154*, 107133.
Lin, Y., & Wu, L. Y. (2014). Exploring the role of dynamic capabilities in firm performance under the resource-based view framework. *Journal of business research*, *67*(3), 407-413.
Liu, F., Song, J. S., & Tong, J. D. (2016). Building supply chain resilience through virtual stockpile pooling. *Production and Operations management*, *25*(10), 1745-1762.
Lockett, A., & Thompson, S. (2001). The resource-based view and economics. *Journal of management*, *27*(6), 723-754.

Lockett, A., Thompson, S., & Morgenstern, U. (2009). The development of the resource-based view of the firm: A critical appraisal. *International journal of management reviews*, *11*(1), 9-28.
Lohmer, J., Bugert, N., & Lasch, R. (2020). Analysis of resilience strategies and ripple effect in blockchain-coordinated supply chains: An agent-based simulation study. *International journal of production economics*, *228*, 107882.
Longo, F., & Oren, T. (2008, September). Supply chain vulnerability and resilience: a state of the art overview. In *Proceedings of European Modeling & Simulation Symposium* (pp. 17-19).
Lotfi, R., Kargar, B., Hoseini, S.H., Nazari, S., Safavi, S. and Weber, G.W., 2021. Resilience and sustainable supply chain network design by considering renewable energy. *International Journal of Energy Research*, *45*(12), pp.17749-17766.
Lounsbury, M., & Crumley, E. T. (2007). New practice creation: An institutional perspective on innovation. *Organization studies*, *28*(7), 993-1012.
Lücker, F., & Seifert, R. W. (2017). Building up resilience in a pharmaceutical supply chain through inventory, dual sourcing and agility capacity. *Omega*, *73*, 114-124.
Lukas, B. A., Joseph Jr, F., Bush, R. P., & Ortinau, D. J. (2004). *Marketing research*. McGraw-Hill.
Ma, X., Chan, A. P., Li, Y., Zhang, B., & Xiong, F. (2020). Critical strategies for enhancing BIM implementation in AEC projects: perspectives from Chinese practitioners. *Journal of Construction Engineering and Management*, *146*(2), 05019019.
Mabele, M. B., Nnko, H., Mwanyoka, I., Kiwango, W. A., & Makupa, E. (2023). Inequalities in the production and dissemination of biodiversity conservation knowledge on Tanzania: A 50-year bibliometric analysis. *Biological Conservation*, *279*, 109910.
MacKinnon, D. (2008). An Introduction to Statistical Mediation Analysis. 245.
MacKinnon, D. P., Lockwood, C. M., & Williams, J. (2004). Confidence limits for the indirect effect: Distribution of the product and resampling methods. *Multivariate behavioral research*, *39*(1), 99-128.
MacKinnon, D. P., Lockwood, C. M., Hoffman, J. M., West, S. G., & Sheets, V. (2002). A comparison of methods to test mediation and other intervening variable effects. *Psychological methods*, *7*(1), 83.
Malhotra, M. K., & Mackelprang, A. W. (2012). Are internal manufacturing and external supply chain flexibilities complementary capabilities?. *Journal of Operations Management*, *30*(3), 180-200.
Malpass, R. S. (1977). Theory and method in cross-cultural psychology. *American Psychologist*, *32*(12), 1069.
Manley, K. (2006). The innovation competence of repeat public sector clients in the Australian construction industry. *Construction Management and Economics*, *24*(12), 1295-1304.
Manuele, F. A. (2003). *On the practice of safety*. John Wiley & Sons.
Manuj, I., & Mentzer, J. T. (2008). Global supply chain risk management strategies. *International Journal of Physical Distribution & Logistics Management*.
Manzini, E., & Vezzoli, C. A. (2002). *Product-service systems and sustainability: Opportunities for sustainable solutions*. UNEP-United Nations Environment Programme.
March, J. G. (1991). Exploration and exploitation in organizational learning. *Organization science*, *2*(1), 71-87.
Marchese, D., Reynolds, E., Bates, M. E., Morgan, H., Clark, S. S., & Linkov, I. (2018). Resilience and sustainability: Similarities and differences in environmental management applications. *Science of the total environment*, *613*, 1275-1283.
Mardle, S. and Metz, S., 2017. Impacts of current EU regulation on the UK whitefish value chain. *Marine Policy*, *84*, pp.52-59.
Mari, S.I., Lee, Y.H. and Memon, M.S., 2016. Sustainable and resilient garment supply chain network design with fuzzy multi-objectives under uncertainty. *Sustainability*, *8*(10), p.1038.
Mariadoss, B. J., Chi, T., Tansuhaj, P., & Pomirleanu, N. (2016). Influences of firm orientations on sustainable supply chain management. *Journal of Business Research*, *69*(9), 3406-3414.
Markley, M. J., & Davis, L. (2007). Exploring future competitive advantage through sustainable supply chains. *International Journal of Physical Distribution & Logistics Management*.
Marsh, H. W., & Hocevar, D. (1985). Application of confirmatory factor analysis to the study of self-concept: First-and higher order factor models and their invariance across groups. *Psychological bulletin*, *97*(3), 562.
Marsh, H. W., Balla, J. R., & Hau, K. T. (1996). An evaluation of incremental fit indices: A clarification of mathematical and empirical properties. *Advanced structural equation modeling: Issues and techniques*, 315-353.
Marsh, S. J., & Stock, G. N. (2006). Creating dynamic capability: The role of intertemporal integration, knowledge retention, and interpretation. *Journal of Product Innovation Management*, *23*(5), 422-436.
Mason, S. J., Cole, M. H., Ulrey, B. T., & Yan, L. (2002). Improving electronics manufacturing supply chain agility through outsourcing. *International Journal of Physical Distribution & Logistics Management*.
Matopoulos, A., Kovács, G., & Hayes, O. (2014). Local resources and procurement practices in humanitarian supply chains: An empirical examination of large-scale house reconstruction projects. *Decision Sciences*, *45*(4), 621-646.
McClements, D.J., Barrangou, R., Hill, C., Kokini, J.L., Lila, M.A., Meyer, A.S. and Yu, L., 2021. Building a Resilient, Sustainable, and Healthier Food Supply through Innovation and Technology. *Annual review of food science and technology*, *12*, pp.1-28.

McCreadie, M., & Rice, R. E. (1999). Trends in analysing access to information. Part I: cross-disciplinary conceptualisations of access. *Information processing & management*, *35*(1), 45-76.
McDougall, N., Wagner, B., & MacBryde, J. (2021). Leveraging competitiveness from sustainable operations: frameworks to understand the dynamic capabilities needed to realise NRBV supply chain strategies. *Supply Chain Management: An International Journal*
McGrath, P., McCarthy, L., Marshall, D. and Rehme, J., 2021. Tools and Technologies of Transparency in Sustainable Global Supply Chains. *California Management Review*, *64*(1), pp.67-89.
Mehrjerdi, Y.Z. and Shafiee, M., 2021. A resilient and sustainable closed-loop supply chain using multiple sourcing and information sharing strategies. *Journal of Cleaner Production*, *289*, p.125141.
Meixell, M. J., & Luoma, P. (2015). Stakeholder pressure in sustainable supply chain management: A systematic review. *International Journal of Physical Distribution & Logistics Management*.
Melnyk SA, Closs DJ, Griffis SE, Zobel CW, Macdonald JR. (2014). Understanding supply chain resilience. Supply Chain Management Review. 18(1), 34-41.
Menguc, B., & Ozanne, L. K. (2005). Challenges of the "green imperative": A natural resource-based approach to the environmental orientation–business performance relationship. *Journal of Business research*, *58*(4), 430-438.
Mentzer, J. T., & Kahn, K. B. (1995). A framework of logistics research. *Journal of business logistics*, *16*(1), 231.
Mentzer, J. T., Flint, D. J., & Hult, G. T. M. (2001). Logistics service quality as a segment-customized process. *Journal of marketing*, *65*(4), 82-104.
Miatto, A., Wolfram, P., Reck, B.K. and Graedel, T.E., 2021. Uncertain Future of American Lithium: A Perspective until 2050. *Environmental science & technology*, *55*(23), pp.16184-16194.
Michel-Villarreal, R., Vilalta-Perdomo, E.L., Canavari, M. and Hingley, M., 2021. Resilience and Digitalization in Short Food Supply Chains: A Case Study Approach. *Sustainability*, *13*(11), p.5913.
Middleton, C., Allouche, J., Gyawali, D. and Allen, S., 2015. The rise and implications of the water-energy-food nexus in Southeast Asia through an environmental justice lens. *Water Alternatives*, *8*(1).
Miemczyk, J., Howard, M., & Johnsen, T. E. (2016). Dynamic development and execution of closed-loop supply chains: a natural resource-based view. *Supply Chain Management: An International Journal*.
Mikalef, P., & Pateli, A. (2017). Information technology-enabled dynamic capabilities and their indirect effect on competitive performance: Findings from PLS-SEM and fsQCA. *Journal of Business Research*, *70*, 1-16.
Miles, M. B., & Huberman, A. M. (1994). *Qualitative data analysis: An expanded sourcebook*. sage.
Miller, D., & Shamsie, J. (1996). The resource-based view of the firm in two environments: The Hollywood film studios from 1936 to 1965. *Academy of management journal*, *39*(3), 519-543.
Miller, M., 2021. Identifying critical thresholds for resilient regional food flows: a case study from the US Upper Midwest. *Frontiers in Sustainable Food Systems*, p.371.
Min, H., & Galle, W. P. (1997). Green purchasing strategies: trends and implications. *International Journal of Purchasing and Materials Management*, *33*(2), 10-17.
Min, H., & Galle, W. P. (2001). Green purchasing practices of US firms. *International Journal of Operations & Production Management.*
Mitra, S., & Datta, P. P. (2014). Adoption of green supply chain management practices and their impact on performance: an exploratory study of Indian manufacturing firms. *International Journal of Production Research*, *52*(7), 2085-2107.
Mohr, L. A., & Webb, D. J. (2005). The effects of corporate social responsibility and price on consumer responses. *Journal of consumer affairs*, *39*(1), 121-147.
Moir, L. (2001). What do we mean by corporate social responsibility?. *Corporate Governance: The international journal of business in society*.
Moktadir, M., Mahmud, Y., Banaitis, A., Sarder, T. and Khan, M.R., 2021. Key performance indicators for adopting sustainability practices in footwear supply chains.
Mondal, A. & Roy, S.K., 2021. Multi-objective sustainable opened-and closed-loop supply chain under mixed uncertainty during COVID-19 pandemic situation. *Computers & Industrial Engineering*, *159*, p.107453.
Montabon, F., Pagell, M., & Wu, Z. (2016). Making sustainability sustainable. *Journal of Supply Chain Management*, *52*(2), 11-27.
Morgan, D. L., Morgan, D. L., David, M., & Krueger, R. A. (1998). *The focus group guidebook*. Sage.
Moustaghfir, K. (2009). How knowledge assets lead to a sustainable competitive advantage: are organizational capabilities a missing link?. *Knowledge Management Research & Practice*, *7*(4), 339-355.
Moustaghfir, K. (2012). Explicating knowledge-based competitive advantage. *International Journal of Synergy and Research*, *1*(1), 23-38.
Mouton, L., Allacker, K., & Röck, M. (2023). Bio-based building material solutions for environmental benefits over conventional construction products–Life cycle assessment of regenerative design strategies (1/2). *Energy and Buildings*, *282*, 112767.
Mullen, M. R. (1995). Diagnosing measurement equivalence in cross-national research. *Journal of International Business Studies*, *26*(3), 573-596.

Mwangi, G.M., Despoudi, S., Espindola, O.R., Spanaki, K. and Papadopoulos, T., 2021. A planetary boundaries perspective on the sustainability: resilience relationship in the Kenyan tea supply chain. *Annals of Operations Research*, pp.1-35.
Mwangola, W. (2018). Conceptualising Supply Chain Resili
Nagel, M. H. (2000, May). Environmental supply-chain management versus green procurement in the scope of a business and leadership perspective. In *Proceedings of the 2000 IEEE International Symposium on Electronics and the Environment (Cat. No. 00CH37082)* (pp. 219-224). IEEE.
Namdar, J., Li, X., Sawhney, R., & Pradhan, N. (2018). Supply chain resilience for single and multiple sourcing in the presence of disruption risks. *International Journal of Production Research*, *56*(6), 2339-2360.
Nayeri, S., Torabi, S.A., Tavakoli, M. and Sazvar, Z., 2021. A multi-objective fuzzy robust stochastic model for designing a sustainable-resilient-responsive supply chain network. *Journal of Cleaner Production*, p.127691.
Naz, F., Kumar, A., Majumdar, A. and Agrawal, R., 2021. Is artificial intelligence an enabler of supply chain resiliency post COVID-19? An exploratory state-of-the-art review for future research. *Operations Management Research*, pp.1-21.
Nchanji, E.B. and Lutomia, C.K., 2021. Regional impact of COVID-19 on the production and food security of common bean smallholder farmers in Sub-Saharan Africa: Implication for SDG's. *Global Food Security*, *29*, p.100524.
Negri, M., Cagno, E., Colicchia, C. and Sarkis, J., 2021. Integrating sustainability and resilience in the supply chain: A systematic literature review and a research agenda. *Business Strategy and the Environment*.
Nguyen, H. D., Do, Q. N. H., & Macchion, L. (2023). Influence of practitioners' characteristics on risk assessment in Green Building projects in emerging economies: a case of Vietnam. *Engineering, construction and architectural management*, *30*(2), 833-852.
Nikolopoulos, K., Punia, S., Schäfers, A., Tsinopoulos, C., & Vasilakis, C. (2021). Forecasting and planning during a pandemic: COVID-19 growth rates, supply chain disruptions, and governmental decisions. *European journal of operational research*, *290*(1), 99-115.
Nunnally, J. C. (1978). Psychometric Theory 2nd edition (New York: McGraw).
O'Keefe, L., McLachlan, C., Gough, C., Mander, S., & Bows-Larkin, A. (2016). Consumer responses to a future UK food system. *British Food Journal*, *118*(2), 412-428.
O'Callaghan, T. (2016). Towards corporate self-regulation. In *Reputation Risk and Globalisation* (pp. 9-40). Edward Elgar Publishing.
O'Reilly III, C.A. & Tushman, M.L. (2008). Ambidexterity as a dynamic capability: Resolving the innovator's dilemma. *Research in organisational behavior*, *28*, pp.185-206.
Olhager, J. (2010). The role of the customer order decoupling point in production and supply chain management. *Computers in industry*, *61*(9), 863-868.
Oliveira, P., & Roth, A. V. (2012). Service orientation: the derivation of underlying constructs and measures. *International Journal of Operations & Production Management*.
Page, C., & Meyer, D. (2000). Applied research design for business and management.
Pagell, M., & Wu, Z. (2009). Building a more complete theory of sustainable supply chain management using case studies of 10 exemplars. *Journal of supply chain management*, *45*(2), 37-56.
Pandza, K., & Thorpe, R. (2009). Creative search and strategic sense-making: missing dimensions in the concept of dynamic capabilities. *British Journal of Management*, *20*, S118-S131.
Park, S. H., & Luo, Y. (2001). Guanxi and organizational dynamics: Organizational networking in Chinese firms. *Strategic management journal*, *22*(5), 455-477.
Patterson, P. G., & Spreng, R. A. (1997). Modelling the relationship between perceived value, satisfaction and repurchase intentions in a business-to-business, services context: an empirical examination. *International Journal of service Industry management*.
Patton, M. Q. (2002). *Qualitative research & evaluation methods*. sage.
Paulraj, A. (2011). Understanding the relationships between internal resources and capabilities, sustainable supply management and organizational sustainability. *Journal of Supply Chain Management*, *47*(1), 19-37.
Pavlou, P. A., & El Sawy, O. A. (2011). Understanding the elusive black box of dynamic capabilities. *Decision sciences*, *42*(1), 239-273.
Pearl, D. K., & Fairley, D. (1985). Testing for the potential for nonresponse bias in sample surveys. *Public Opinion Quarterly*, *49*(4), 553-560.
Peinkofer, S. T., Esper, T. L., & Howlett, E. (2016). Hurry! Sale ends soon: the impact of limited inventory availability disclosure on consumer responses to online stockouts. *Journal of Business Logistics*, *37*(3), 231-246.
Peng, P., Snyder, L.V., Lim, A. & Liu, Z. (2011). Reliable logistics networks design with facility disruptions. *Transportation Research Part B: Methodological*, *45*(8), 1190-1211.
Penrose, E. T. (1959). The Theory of the Growth of the Firm. New York: John Wiley & Sons Inc. *Penrose, E. T*, *1*, 1-23.
Penrose, E., & Penrose, E. T. (2009). *The Theory of the Growth of the Firm*. Oxford university press.
Pentland, B. T., Feldman, M. S., Becker, M. C., & Liu, P. (2012). Dynamics of organizational routines: A generative model. *Journal of Management Studies*, *49*(8), 1484-1508.

Pereira, C. R., Christopher, M., & Da Silva, A. L. (2014). Achieving supply chain resilience: the role of procurement. *Supply Chain Management: an international journal*.
Perotti, S., Zorzini, M., Cagno, E., & Micheli, G. J. (2012). Green supply chain practices and company performance: the case of 3PLs in Italy. *International Journal of Physical Distribution & Logistics Management*.
Perrow, C. (1986). Economic theories of organisation. *Theory and society*, *15*(1-2), 11-45.
Peters, E., Subar, K., & Martin, H. (2019). Late payment and nonpayment within the construction industry: Causes, effects, and solutions. *Journal of Legal Affairs and Dispute Resolution in Engineering and Construction*, *11*(3), 04519013.
Pettit, T. J., Fiksel, J., & Croxton, K. L. (2010). Ensuring supply chain resilience: development of a conceptual framework. *Journal of business logistics*, *31*(1), 1-21.
Plewa, C. (2010). *Key drivers of University-industry relationships and the impact of organisational culture differences*. Verlag Dr. Muller.
Podsakoff, P. M., & Organ, D. W. (1986). Self-reports in organizational research: Problems and prospects. *Journal of management*, *12*(4), 531-544.
Podsakoff, P. M., MacKenzie, S. B., Lee, J. Y., & Podsakoff, N. P. (2003). Common method biases in behavioral research: a critical review of the literature and recommended remedies. *Journal of applied psychology*, *88*(5), 879.
Poelman, M. P., Gillebaart, M., Schlinkert, C., Dijkstra, S. C., Derksen, E., Mensink, F., ... & de Vet, E. (2021). Eating behavior and food purchases during the COVID-19 lockdown: A cross-sectional study among adults in the Netherlands. *Appetite*, *157*, 105002.
Ponis, S. T., & Koronis, E. (2012). Supply Chain Resilience? Definition of concept and its formative elements. *The journal of applied business research*, *28*(5), 921-935.
Ponomarov, S. (2012). Antecedents and consequences of supply chain resilience: a dynamic capabilities perspective.
Ponomarov, S. Y., & Holcomb, M. C. (2009). Understanding the concept of supply chain resilience. *The international journal of logistics management*.
Porter, M. E., & Van der Linde, C. (1995). Toward a new conception of the environment-competitiveness relationship. *Journal of economic perspectives*, *9*(4), 97-118.
Powell, R. (2006). The Enron trial drama: A new case for stakeholder theory. *U. Tol. L. Rev.*, *38*, 1087.
Powell, T. C., Lovallo, D., & Fox, C. R. (2011). Behavioral strategy. *Strategic Management Journal*, *32*(13), 1369-1386.
Practical Guide for Continuous Improvement. United Nations (UN).
Prahinski, C., & Kocabasoglu, C. (2006). Empirical research opportunities in reverse supply chains. *Omega*, *34*(6), 519-532.
Prajogo, D., & Sohal, A. (2013). Supply chain professionals: A study of competencies, use of technologies, and future challenges. *International Journal of Operations & Production Management*.
Prater, E., Biehl, M., & Smith, M. A. (2001). International supply chain agility-Tradeoffs between flexibility and uncertainty. *International journal of operations & production management*.
Preacher, K. J., & Hayes, A. F. (2004). SPSS and SAS procedures for estimating indirect effects in simple mediation models. *Behavior research methods, instruments, & computers*, *36*(4), 717-731.
Preacher, K. J., Rucker, D. D., & Hayes, A. F. (2007). Addressing moderated mediation hypotheses: Theory, methods, and prescriptions. *Multivariate behavioral research*, *42*(1), 185-227.
Priya Datta, P., Christopher, M., & Allen, P. (2007). Agent-based modelling of complex production/distribution systems to improve resilience. *International Journal of Logistics Research and Applications*, *10*(3), 187-203.
Pu, M., Chen, X. and Zhong, Y., 2021. Overstocked Agricultural Produce and Emergency Supply System in the COVID-19 Pandemic: Responses from China. *Foods*, *10*(12), p.3027.
Pullman, M. E., Maloni, M. J., & Carter, C. R. (2009). Food for thought: social versus environmental sustainability practices and performance outcomes. *Journal of Supply Chain Management*, *45*(4), 38-54.
Purnell, L. S., & Freeman, R. E. (2012). Stakeholder theory, fact/value dichotomy, and the normative core: How Wall Street stops the ethics conversation. *Journal of Business Ethics*, *109*(1), 109-116.
Quayson, M., Bai, C. and Osei, V., 2020. Digital inclusion for resilient post-COVID-19 supply chains: smallholder farmer perspectives. *IEEE Engineering Management Review*, *48*(3), pp.104-110.
Rajesh, R. (2018). On sustainability, resilience, and the sustainable–resilient supply networks. *Sustainable Production and Consumption*, *15*, 74-88.
Rajesh, R., 2019. Social and environmental risk management in resilient supply chains: a periodical study by the Grey-Verhulst model. *International Journal of Production Research*, *57*(11), pp.3748-3765.
Ramirez-Peña, M., Sotano, A.J.S., Pérez-Fernandez, V., Abad, F.J. and Batista, M., 2020. Achieving a sustainable shipbuilding supply chain under I4. 0 perspective. *Journal of Cleaner Production*, *244*, p.118789.
Rao, P. H. (2008). *Greening the supply chain: A guide for Asian managers*. SAGE Publications India.
Rao, P., Singh, A. K., la O'Castillo, O., Intal Jr, P. S., & Sajid, A. (2009). A metric for corporate environmental indicators… for small and medium enterprises in the Philippines. *Business strategy and the environment*, *18*(1), 14-31.
Reference

Revilla, E. & Saenz, M.J. (2017). The impact of risk management on the frequency of supply chain disruptions. a configurationally approach. *International Journal of Operations & Production Management*, 37(5), 557-576.
Ribeiro, J. P., & Barbosa-Povoa, A. (2018). Supply Chain Resilience: Definitions and quantitative modelling approaches–A literature review. *Computers & Industrial Engineering*, *115*, 109-122.
Richardson, H. A., Simmering, M. J., & Sturman, M. C. (2009). A tale of three perspectives: Examining post hoc statistical techniques for detection and correction of common method variance. *Organizational Research Methods*, *12*(4), 762-800.
Richey, R. G., & Autry, C. W. (2009). Assessing interfirm collaboration/technology investment tradeoffs. *The International Journal of Logistics Management*.
Ritchie, N.H., 2021, April. Leadership for a climate resilient, net-zero health system: Transforming supply chains to the circular economy. In *Healthcare Management Forum* (p. 08404704211003610). Sage CA: Los Angeles, CA: SAGE Publications.
Rogers, D. S., & Tibben-Lembke, R. (2001). An examination of reverse logistics practices. *Journal of business logistics*, *22*(2), 129-148.
Rotaru, K., Wilkin, C. & Ceglowski, A. (2014), "Analysis of SCOR's approach to supply chain risk management", *International Journal of Operations & Production Management*, Vol. 34 No. 10, 1246-1268.
Rothaermel, F. T., & Hess, A. M. (2007). Building dynamic capabilities: Innovation driven by individual-, firm-, and network-level effects. *Organization science*, *18*(6), 898-921.
Rouleau, L. (2005). Micro-practices of strategic sensemaking and sensegiving: How middle managers interpret and sell change every day. *Journal of Management studies*, *42*(7), 1413-1441.
Sabahi, S., & Parast, M. M. (2020). Firm innovation and supply chain resilience: a dynamic capability perspective. *International Journal of Logistics Research and Applications*, *23*(3), 254-269.
Sachan, A., & Datta, S. (2005). Review of supply chain management and logistics research. *International Journal of Physical Distribution & Logistics Management*.
Saghafian, S., & Van Oyen, M. P. (2012). The value of flexible backup suppliers and disruption risk information: newsvendor analysis with recourse. *IIE Transactions*, *44*(10), 834-867.
Sahu, A. K., Datta, S., & Mahapatra, S. S. (2017). Evaluation of performance index in resilient supply chain: a fuzzy-based approach. *Benchmarking: An International Journal*.
Sahu, K. and Kohli, S., 2019. Performance Improvement Tool Towards the Medicines Manufacturing Pharmaceutical Companies Under Sustainable Practices. *International Journal of E-Entrepreneurship and Innovation (IJEEI)*, *9*(2), pp.35-48.
Sahu, K. and Sahu, A.K., 2019. Performance Measurement of Medicines Delivery of Pharmaceutical Companies Under Chain of Sustainable Procurement. *International Journal of Social Ecology and Sustainable Development (IJSESD)*, *10*(3), pp.116-128.
Samra-Fredericks, D. (2003). Strategizing as lived experience and strategists' everyday efforts to shape strategic direction. *Available at SSRN 371248*.
Sanchez-Rodrigues, V., Potter, A., & Naim, M. M. (2010). Evaluating the causes of uncertainty in logistics operations. *The International Journal of Logistics Management*.
Sandberg, E. (2021). Dynamic capabilities for the creation of logistics flexibility–a conceptual framework. *The International Journal of Logistics Management*.
Sapienza, H. J., Autio, E., George, G., & Zahra, S. A. (2006). A capabilities perspective on the effects of early internationalisation on firm survival and growth. *Academy of management review*, *31*(4), 914-933.
Sapienza, H.J., Autio, E., George, G. and Zahra, S.A., 2006. A capabilities perspective on the effects of early internationalization on firm survival and growth. *Academy of management review*, *31*(4), pp.914-933.
Sauer, K., Stoodley, P., Goeres, D. M., Hall-Stoodley, L., Burmølle, M., Stewart, P. S., & Bjarnsholt, T. (2022). The biofilm life cycle: Expanding the conceptual model of biofilm formation. *Nature Reviews Microbiology*, *20*(10), 608-620.
Saunders, L. W., Kleiner, B. M., McCoy, A. P., Lingard, H., Mills, T., Blismas, N., & Wakefield, R. (2015). The effect of early supplier engagement on social sustainability outcomes in project-based supply chains. *Journal of Purchasing and Supply Management*, *21*(4), 285-295.
Saunders, M., Lewis, P., & Thornhill, A. (2012). *Research methods for business students*. Pearson education.
Savitz, A., & Weber, W. (2006). The triple bottom line: How today's best-run companies are achieving economic. *Josseybass: Social and Environmental Success*.
Scheibe, K.P. & Blackhurst, J. (2018). Supply chain disruption propagation: a systemic risk and normal accident theory perspective. *International Journal of Production Research*, *56*(1-2), 43-59.
Schreiber, J. B., Nora, A., Stage, F. K., Barlow, E. A., & King, J. (2006). Reporting structural equation modeling and confirmatory factor analysis results: A review. *The Journal of educational research*, *99*(6), 323-338.
Schrempf-Stirling, J., Palazzo, G., & Phillips, R. A. (2016). Historic corporate social responsibility. *Academy of Management Review*, *41*(4), 700-719.
Seifert, R. (2015, January). Dynamic capabilities in sustainable supply chain management: A theoretical framework. In *Supply Chain Forum: An International Journal* (Vol. 16, No. 4, pp. 2-15). Taylor & Francis.
Seifert, R. (2015, January). Dynamic capabilities in sustainable supply chain management: A theoretical framework. In *Supply Chain Forum: An International Journal* (Vol. 16, No. 4, pp. 2-15). Taylor & Francis.

Seifert, R. (2015, January). Dynamic capabilities in sustainable supply chain management: A theoretical framework. In *Supply Chain Forum: An International Journal* (Vol. 16, No. 4, pp. 2-15). Taylor & Francis.
Sessu, A., Sjahruddin, H., & Santoso, A. (2020). The moderating effect 0f supply chain dynamic capabilities on the relationship of sustainable supply chain management practices, supply chain integration and business performance. *Journal of Talent Development and Excellence*, *12*(1), 1339-1353.
Seuring, S. A. (2008). Assessing the rigor of case study research in supply chain management. *Supply Chain Management: an international journal*.
Seuring, S., & Müller, M. (2008). From a literature review to a conceptual framework for sustainable supply chain management. *Journal of cleaner production*, *16*(15), 1699-1710.
Shafiee, M., Zare Mehrjerdi, Y. and Keshavarz, M., 2021. Integrating lean, resilient, and sustainable practices in supply chain network: mathematical modelling and the AUGMECON2 approach. *International Journal of Systems Science: Operations & Logistics*, pp.1-21.
Sharfman, M. P., & Dean Jr, J. W. (1997). Flexibility in strategic decision making: informational and ideological perspectives. *Journal of management studies*, *34*(2), 191-217.
Sharifi, M., Hosseini-Motlagh, S.M., Samani, M.R.G. and Kalhor, T., 2020. Novel resilient-sustainable strategies for second-generation biofuel network design considering Neem and Eruca Sativa under hybrid stochastic fuzzy robust approach. *Computers & Chemical Engineering*, *143*, p.107073.
Sharma, S. K., & George, S. A. (2018). Modelling resilience of truckload transportation industry. *Benchmarking: An International Journal*.
Sharma, V., Raut, R. D., Mangla, S. K., Narkhede, B. E., Luthra, S., & Gokhale, R. (2021). A systematic literature review to integrate lean, agile, resilient, green and sustainable paradigms in the supply chain management. *Business Strategy and the Environment*, *30*(2), 1191-1212.
Sharma, V., Raut, R.D., Mangla, S.K., Narkhede, B.E., Luthra, S. and Gokhale, R., 2021. A systematic literature review to integrate lean, agile, resilient, green and sustainable paradigms in the supply chain management. *Business Strategy and the Environment*, *30*(2), pp.1191-1212.
Sheffi, Y. (2001). Supply chain management under the threat of international terrorism. *The International Journal of logistics management*, *12*(2), 1-11.
Sheffi, Y., & Rice Jr, J. B. (2005). A supply chain view of the resilient enterprise. *MIT Sloan management review*, *47*(1), 41.
Sher, P. J., & Lee, V. C. (2004). Information technology as a facilitator for enhancing dynamic capabilities through knowledge management. *Information & management*, *41*(8), 933-945.
Silvestre, B. S. (2015). Sustainable supply chain management in emerging economies: Environmental turbulence, institutional voids and sustainability trajectories. *International Journal of Production Economics*, *167*, 156-169.
Simatupang, T. M., & Sridharan, R. (2008). Design for supply chain collaboration. *Business Process Management Journal*.
Sinha, P. R., Whitman, L. E., & Malzahn, D. (2004). Methodology to mitigate supplier risk in an aerospace supply chain. *Supply Chain Management: an international journal*.
Sirmon, D.G., Hitt, M.A. and Ireland, R.D., 2007. Managing firm resources in dynamic environments to create value: Looking inside the black box. *Academy of management review*, *32*(1), pp.273-292.
Småros, J., Lehtonen, J. M., Appelqvist, P., & Holmström, J. (2003). The impact of increasing demand visibility on production and inventory control efficiency. *International journal of physical distribution & logistics management*.
Sobel, M. E. (1982). Asymptotic confidence intervals for indirect effects in structural equation models. *Sociological methodology*, *13*, 290-312.
Sobel, M. E. (1986). Some new results on indirect effects and their standard errors in covariance structure models. *Sociological methodology*, *16*, 159-186.
Sodhi, M. S., Son, B. G., & Tang, C. S. (2012). Researchers' perspectives on supply chain risk management. *Production and operations management*, *21*(1), 1-13.
Soma, K., Obwanga, B. and Kanyuguto, C.M., 2021. A New Rural-Urban Fish Food System was Established in Kenya–Learning from Best Practices. *Sustainability*, *13*(13), p.7254.
Soni, G., & Kodali, R. (2013). A decision framework for assessment of risk associated with global supply chain. *Journal of Modelling in Management*.
Spence, L., & Bourlakis, M. (2009). The evolution from corporate social responsibility to supply chain responsibility: the case of Waitrose. *Supply Chain Management: An International Journal*.
Spens, K. M., & Kovács, G. (2006). A content analysis of research approaches in logistics research. *International journal of physical distribution & logistics management*.
Spiegler, V. L., Potter, A. T., Naim, M. M., & Towill, D. R. (2016). The value of nonlinear control theory in investigating the underlying dynamics and resilience of a grocery supply chain. *International Journal of Production Research*, *54*(1), 265-286.
Srivastava, R. K., Shervani, T. A., & Fahey, L. (1999). Marketing, business processes, and shareholder value: an organizationally embedded view of marketing activities and the discipline of marketing. *Journal of marketing*, *63*(4_suppl1), 168-179.

Stancu, A., Grigore, G. F., & Rosca, M. I. (2011). The impact of corporate social responsibility on employees. In *International Conference on Information and Finance* (Vol. 21, 11-16).
Steenkamp, J. B. (2017). *Global brand strategy: World-wise marketing in the age of branding*. Springer.
Stevenson, M., & Spring, M. (2007). Flexibility from a supply chain perspective: definition and review. *International journal of operations & production management*.
Stone, C. A., & Sobel, M. E. (1990). The robustness of estimates of total indirect effects in covariance structure models estimated by maximum. *Psychometrika*, *55*(2), 337-352.
Strauss, K., Lepoutre, J., & Wood, G. (2017). Fifty shades of green: How microfoundations of sustainability dynamic capabilities vary across organizational contexts. *Journal of Organizational Behavior*, *38*(9), 1338-1355.
Sudarsan, A., Kurukkanari, C., & Bendi, D. (2023). A state-of-the-art review on readiness assessment tools in the adoption of renewable energy. *Environmental Science and Pollution Research*, *30*(12), 32214-32229.
Suryawanshi, P., Dutta, P., Varun, L., Shailesh, J. and Deepak, G., 2021. Sustainable and resilience planning for the supply chain of online hyperlocal grocery services. *Sustainable Production and Consumption*.
Sustainability, S. C. (2010). a practical Guide for Continuous improvement by United Nations Global Compact.
Swafford, P. M., Ghosh, S., & Murthy, N. (2006). The antecedents of supply chain agility of a firm: scale development and model testing. *Journal of Operations management*, *24*(2), 170-188.
Swafford, P. M., Ghosh, S., & Murthy, N. (2008). Achieving supply chain agility through IT integration and flexibility. *International Journal of Production Economics*, *116*(2), 288-297.
Tang, C.S. (2006). Perspectives in supply chain risk management. *International journal of production economics*, *103*(2), 451-488.
Tashakkori, A., & Teddlie, C. (2003). Issues and dilemmas in teaching research methods courses in social and behavioural sciences: US perspective. *International journal of social research methodology*, *6*(1), 61-77.
Taylor, K.M. & Vachon, S. (2018). Empirical research on sustainable supply chains: IJPR's contribution and research avenues. *International Journal of Production Research*, *56*(1-2), 950-959.
Tcholtchev, N. and Schieferdecker, I., 2021. Sustainable and reliable information and communication technology for resilient smart cities. *Smart Cities*, *4*(1), pp.156-176.
Teece, D. J. (2007). Explicating dynamic capabilities: the nature and microfoundations of (sustainable) enterprise performance. *Strategic management journal*, *28*(13), 1319-1350.
Teece, D. J., & Pisano, G. (1994). The dynamics capabilities of firms: an introduction. *Industrial and Corporate Change*, *3*(3), 537-556.
Teece, D.J., Pisano, G. & Shuen, A. (1997). Dynamic capabilities and strategic management. *Strategic management journal*, *18*(7), 509-533.
Tibben-Lembke, R. S. (2004). Strategic use of the secondary market for retail consumer goods. *California Management Review*, *46*(2), 90-104.
Tomer, J. F. (1987). *Organisational capital: The path to higher productivity and well-being*. Praeger publishers.
Tomlin, B. (2006). On the value of mitigation and contingency strategies for managing supply chain disruption risks. *Management science*, *52*(5), 639-657.
Tondolo, V. A. G., & Bitencourt, C. C. (2014). Understanding dynamic capabilities from its antecedents, processes and outcomes. *Brazilian Business Review*, *11*(5), 122-144.
Töyli, J., Lorentz, H., Ojala, L., Wieland, A., & Wallenburg, C. M. (2013). The influence of relational competencies on supply chain resilience: a relational view. *International Journal of Physical Distribution & Logistics Management*.
Tranfield, D., Denyer, D., & Smart, P. (2003). Towards a methodology for developing evidence-informed management knowledge by means of systematic review. *British journal of management*, *14*(3), 207-222.
Tsai, W. (2001). Knowledge transfer in intraorganizational networks: Effects of network position and absorptive capacity on business unit innovation and performance. *Academy of management journal*, *44*(5), 996-1004.
Turnquist, M., & Vugrin, E. (2013). Design for resilience in infrastructure distribution networks. *Environment Systems & Decisions*, *33*(1), 104-120.
Tushman, M. L., & Anderson, P. (1986). Technological discontinuities and organisational environments. *Administrative science quarterly*, 439-465.
Urbach, N., & Ahlemann, F. (2010). Structural equation modeling in information systems research using partial least squares. *Journal of Information Technology Theory and Application (JITTA)*, *11*(2), 2.
Vachon, S., & Klassen, R. D. (2006). Extending green practices across the supply chain: the impact of upstream and downstream integration. *International Journal of Operations & Production Management*, *26*(7), 795-821.
Vachon, S., & Klassen, R. D. (2008). Environmental management and manufacturing performance: The role of collaboration in the supply chain. *International journal of production economics*, *111*(2), 299-315.
Van de Vijver, F. J., & Harsveld, M. (1994). The incomplete equivalence of the paper-and-pencil and computerized versions of the General Aptitude Test Battery. *Journal of Applied Psychology*, *79*(6), 852.
Van Der Vorst, J. G., & Beulens, A. J. (2002). Identifying sources of uncertainty to generate supply chain redesign strategies. *International Journal of Physical Distribution & Logistics Management*.
Van Dijk, T. A. (2004). Text and context of parliamentary debates. *Cross-cultural perspectives on parliamentary discourse*, *339*, 216-17.

Vanalle, R. M., Ganga, G. M. D., Godinho Filho, M., & Lucato, W. C. (2017). Green supply chain management: An investigation of pressures, practices, and performance within the Brazilian automotive supply chain. *Journal of cleaner production*, *151*, 250-259.
Vandenberg, R. J., & Lance, C. E. (2000). A review and synthesis of the measurement invariance literature: Suggestions, practices, and recommendations for organizational research. *Organizational research methods*, *3*(1), 4-70
Varnäs, A., Balfors, B., & Faith-Ell, C. (2009). Environmental consideration in procurement of construction contracts: current practice, problems and opportunities in green procurement in the Swedish construction industry. *Journal of Cleaner Production*, *17*(13), 1214-1222.
Veal, A. J. (2005). *Business research methods: A managerial approach*. Pearson Education Australia/Addison Wesley.
Vecchio, Y., Iddrisu, A.L., Adinolfi, F. and De Rosa, M., 2020. Geographical Indication to Build up Resilient Rural Economies: A Case Study from Ghana. *Sustainability*, *12*(5), p.2052.
Velicer, W. F., & Jackson, D. N. (1990). Component analysis versus common factor analysis: Some issues in selecting an appropriate procedure. *Multivariate behavioral research*, *25*(1), 1-28.
Verona, G., & Ravasi, D. (2003). Unbundling dynamic capabilities: an exploratory study of continuous product innovation. *Industrial and corporate change*, *12*(3), 577-606.
Vicente-Vicente, J.L., Doernberg, A., Zasada, I., Ludlow, D., Staszek, D., Bushell, J., Hainoun, A., Loibl, W. and Piorr, A., 2021. Exploring alternative pathways toward more sustainable regional food systems by foodshed assessment–city region examples from Vienna and Bristol. *Environmental Science & Policy*, *124*, pp.401-412.
Vieira, D. R., Calmon, J. L., & Coelho, F. Z. (2016). Life cycle assessment (LCA) applied to the manufacturing of common and ecological concrete: A review. *Construction and Building Materials*, *124*, 656-666
Virvilaite, R., & Daubaraite, U. (2011). Corporate social responsibility in forming corporate image. *Engineering Economics*, *22*(5), 534-543.
Wagner, S. M., & Bode, C. (2006). An empirical investigation into supply chain vulnerability. *Journal of purchasing and supply management*, *12*(6), 301-312.
Wagner, S. M., & Bode, C. (2008). An empirical examination of supply chain performance along several dimensions of risk. *Journal of business logistics*, *29*(1), 307-325.
Wahyuni, D. (2012). The research design maze: Understanding paradigms, cases, methods and methodologies. *Journal of applied management accounting research*, *10*(1), 69-80.
Wang, C. L., & Ahmed, P. K. (2007). Dynamic capabilities: A review and research agenda. *International journal of management reviews*, *9*(1), 31-51.
Wang, C., Ghadimi, P., Lim, M.K. and Tseng, M.L., 2019. A literature review of sustainable consumption and production: A comparative analysis in developed and developing economies. *Journal of Cleaner Production*, *206*, pp.741-754.
Wang, Q., Huang, K., Liu, H., & Yu, Y. (2023). Factors affecting crop production water footprint: A review and meta-analysis. *Sustainable Production and Consumption.* Wang, Y., Iqbal, U., & Gong, Y. (2021). The Performance of resilient supply chain sustainability in COVID-19 by sourcing technological integration. *Sustainability*, *13*(11), 6151.
Wang, Z., & Sarkis, J. (2013). Investigating the relationship of sustainable supply chain management with corporate financial performance. *International Journal of Productivity and Performance Management*.
Waters, D. (2011). *Supply chain risk management: vulnerability and resilience in logistics*. Kogan Page Publishers.
Wei, H. L., & Wang, E. T. (2010). The strategic value of supply chain visibility: increasing the ability to reconfigure. *European Journal of Information Systems*, *19*(2), 238-249.
Welford, R., & Frost, S. (2006). Corporate social responsibility in Asian supply chains. *Corporate Social Responsibility and Environmental Management*, *13*(3), 166-176.
Whitlock, K., Abanda, F. H., Manjia, M. B., Pettang, C., & Nkeng, G. E. (2021). 4D BIM for construction logistics management. *CivilEng*, *2*(2), 325-348.
Whittington, R. (2006). Completing the practice turn in strategy research. *Organization studies*, *27*(5), 613-634.
Whittington, R., & Molloy, E. (2005). Organising organising: the practice inside the process.
Wieland, A., & Wallenburg, C. M. (2013). The influence of relational competencies on supply chain resilience: a relational view. *International journal of physical distribution & logistics management*.
Wijnberg, N. M. (2000). Normative stakeholder theory and Aristotle: The link between ethics and politics. *Journal of Business Ethics*, *25*(4), 329-342.
Williams, J., & MacKinnon, D. P. (2008). Resampling and distribution of the product methods for testing indirect effects in complex models. *Structural equation modeling: a multidisciplinary journal*, *15*(1), 23-51.
Williamson, O. 1975. *Markets and Hierarchies*. New York: Free Press.
Wittstruck, D., & Teuteberg, F. (2012). Understanding the success factors of sustainable supply chain management: empirical evidence from the electrics and electronics industry. *Corporate social responsibility and environmental management*, *19*(3), 141-158.
Wolf, F., & Mujtaba, B. G. (2011). Sustainability in service operations. *International Journal of Information Systems in the Service Sector (IJISSS)*, *3*(1), 1-20.

Wolters, T. (2003). Transforming international product chains into channels of sustainable production: The imperative of sustainable chain management. *Greener Management International*, (43), 6.
Woo, S. H., Pettit, S. J., Kwak, D. W., & Beresford, A. K. (2011). Seaport research: A structured literature review on methodological issues since the 1980s. *Transportation Research Part A: Policy and Practice*, *45*(7), 667-685.
Wu, C. L., Fang, D. P., Liao, P. C., Xue, J. W., Li, Y., & Wang, T. (2015). Perception of corporate social responsibility: The case of Chinese international contractors. *Journal of Cleaner Production*, *107*, 185-194.
Xu, X., & Gursoy, D. (2015). Influence of sustainable hospitality supply chain management on customers' attitudes and behaviors. *International journal of hospitality management*, *49*, 105-116.
Xue, X., Shen, Q., Tan, Y., Zhang, Y., & Fan, H. (2011). Comparing the value of information sharing under different inventory policies in construction supply chain. *International journal of project management*, *29*(7), 867-876.
Yamin, M.A., 2021. Investigating the Drivers of Supply Chain Resilience in the Wake of the COVID-19 Pandemic: Empirical Evidence from an Emerging Economy. *Sustainability*, *13*(21), p.11939.
Yan, T., Conrad, F. G., Tourangeau, R., & Couper, M. P. (2011). Should I stay or should I go: The effects of progress feedback, promised task duration, and length of questionnaire on completing web surveys. *International Journal of Public Opinion Research*, *23*(2), 131-147.
Yang, C. C. (2012). Assessing the moderating effect of innovation capability on the relationship between logistics service capability and firm performance for ocean freight forwarders. *International Journal of Logistics Research and Applications*, *15*(1), 53-69.
Yang, R.J. & Zou, P.X. (2014). Stakeholder-associated risks and their interactions in complex green building projects: A social network model. *Building and Environment*, *73*, 208-222.
Yang, R.J., Zou, P.X. & Wang, J. (2016). Modelling stakeholder-associated risk networks in green building projects. *International journal of project management*, *34*(1), 66-81.
Yang, T., & Fan, W. (2016). Information management strategies and supply chain performance under demand disruptions. *International Journal of Production Research*, *54*(1), 8-27.
Yang, Y., Jia, F., & Xu, Z. (2018). Towards an integrated conceptual model of supply chain learning: an extended resource-based view. *Supply Chain Management: An International Journal*.
Yazdanparast, R., Jolai, F., Pishvaee, M.S. and Keramati, A., 2022. A resilient drop-in biofuel supply chain integrated with existing petroleum infrastructure: Toward more sustainable transport fuel solutions. *Renewable Energy*, *184*, pp.799-819.
Yin, R. K. (2018). *Case study research and applications*. Sage.
Zahiri, B., Zhuang, J. & Mohammadi, M. (2017). Toward an integrated sustainable-resilient supply chain: A pharmaceutical case study. *Transportation Research Part E: Logistics and Transportation Review*, *103*, pp.109-142.
Zahra, S. A., Sapienza, H. J., & Davidsson, P. (2006). Entrepreneurship and dynamic capabilities: A review, model and research agenda. *Journal of Management studies*, *43*(4), 917-955.
Zailani, S., Jeyaraman, K., Vengadasan, G., & Premkumar, R. (2012). Sustainable supply chain management (SSCM) in Malaysia: A survey. *International journal of production economics*, *140*(1), 330-340.
Zarbakhshnia, N., Wu, Y., Govindan, K., & Soleimani, H. (2020). A novel hybrid multiple attribute decision-making approach for outsourcing sustainable reverse logistics. *Journal of Cleaner Production*, *242*, 118461.
Zare Mehrjerdi, Y. and Lotfi, R., 2019. Development of a mathematical model for sustainable closed-loop supply chain with efficiency and resilience systematic framework. *International Journal of Supply and Operations Management*, *6*(4), pp.360-388.
Zare Mehrjerdi, Y., & Lotfi, R. (2019). Development of a mathematical model for sustainable closed-loop supply chain with efficiency and resilience systematic framework. *International Journal of Supply and Operations Management*, *6*(4), 360-388.
Zhang, C. Y., & Oki, T. (2023). Water pricing reform for sustainable water resources management in China's agricultural sector. *Agricultural Water Management*, *275*, 108045.
Zhang, M., Tse, Y. K., Doherty, B., Li, S., & Akhtar, P. (2018). Sustainable supply chain management: Confirmation of a higher-order model. *Resources, Conservation and Recycling*, *128*, 206-221.
Zhao, P., Ji, S. and Xue, Y., 2021. An integrated approach based on the decision-theoretic rough set for resilient-sustainable supplier selection and order allocation. *Kybernetes*.
Zhao, X., Hwang, B.G. & Gao, Y. (2016). A fuzzy synthetic evaluation approach for risk assessment: a case of Singapore's green projects. *Journal of Cleaner Production*, *115*, pp.203-213.
Zhao, Z. Y., Zhao, X. J., Davidson, K., & Zuo, J. (2012). A corporate social responsibility indicator system for construction enterprises. *Journal of cleaner production*, *29*, 277-289.
Zhou, T., Jiang, L. L., Su, R. Q., & Zhang, Y. C. (2008). Effect of initial configuration on network-based recommendation. *EPL (Europhysics Letters)*, *81*(5), 58004.
Zhu, Q., & Sarkis, J. (2004). Relationships between operational practices and performance among early adopters of green supply chain management practices in Chinese manufacturing enterprises. *Journal of operations management*, *22*(3), 265-289.
Zhu, Q., & Sarkis, J. (2006). An inter-sectoral comparison of green supply chain management in China: drivers and practices. *Journal of cleaner production*, *14*(5), 472-486.

Zhu, Q., & Sarkis, J. (2007). The moderating effects of institutional pressures on emergent green supply chain practices and performance. *International journal of production research*, *45*(18-19), 4333-4355.
Zhu, Q., & Zhang, Q. (2015). Evaluating practices and drivers of corporate social responsibility: The Chinese context. *Journal of Cleaner Production*, *100*, 315-324.
Zhu, Q., Geng, Y., & Lai, K. H. (2010). Circular economy practices among Chinese manufacturers varying in environmental-oriented supply chain cooperation and the performance implications. *Journal of Environmental Management*, *91*(6), 1324-1331.
Zhu, Q., Liu, J., & Lai, K. H. (2016). Corporate social responsibility practices and performance improvement among Chinese national state-owned enterprises. *International Journal of production economics*, *171*, 417-426.
Zhu, Q., Sarkis, J., & Lai, K. H. (2007). Green supply chain management: pressures, practices and performance within the Chinese automobile industry. *Journal of cleaner production*, *15*(11-12), 1041-1052.
Zhu, Q., Sarkis, J., & Lai, K. H. (2008). Confirmation of a measurement model for green supply chain management practices implementation. *International journal of production economics*, *111*(2), 261-273.
Zhu, Q., Sarkis, J., & Lai, K. H. (2013). Institutional-based antecedents and performance outcomes of internal and external green supply chain management practices. *Journal of Purchasing and Supply Management*, *19*(2), 106-117.
Zhu, Q., Sarkis, J., Cordeiro, J. J., & Lai, K. H. (2008). Firm-level correlates of emergent green supply chain management practices in the Chinese context. *Omega*, *36*(4), 577-591.
Zikmund, W. G., Babin, B. J., Carr, J. C., & Griffin, M. (2003). Research methods. *Health economics research method*, *2*.
Zollo, M., & Winter, S. G. (2002). Deliberate learning and the evolution of dynamic capabilities. *Organisation science*, *13*(3), 339-351.
Zsidisin, G. A., & Ellram, L. M. (2003). An agency theory investigation of supply risk m anagement. *Journal of supply chain management*, *39*(2), 15-27.
Zsidisin, G. A., & Hendrick, T. E. (1998). Purchasing's involvement in environmental issues: a multi-country perspective. *Industrial Management & Data Systems*.
Zsidisin, G. A., & Siferd, S. P. (2001). Environmental purchasing: a framework for theory development. *European Journal of Purchasing & Supply Management*, *7*(1), 61
Zsidisin, G. A., & Wagner, S. M. (2010). Do perceptions become reality? The moderating role of supply chain resiliency on disruption occurrence. *Journal of business logistics*, *31*(2), 1-20.

Abbreviation

SSCM	Sustainable Supply Chain Management
SPD	Sustainable Product Design
EP	Environmental Procurement
ECC	Environmental Customer Collaboration
IGM	Internal Green Management
IR	Investment Recovery
DM	Diversity Management
CDI	Community Development and Involvement
SM	Safety Management
RL	Reverse logistics
SCR	Supply Chain Resilience
CC	Communication and coordination
RR	Resource reconfiguration
CU	Creating a supply chain risk management culture
AG	Agility
SSCMP	Sustainable Supply Chain Performance
ENVP	Environmental performance
SCOP	Social performance
ECOP	Economic performance
OPEP	Operation performance
SCDC	Supply Chain Dynamic Capability
SEN	Supply Chain Sensing
SEI	Supply Chain Seizing
REC	Supply Chain Reconfiguring

Appendix

Appendix A- 1 (Literature Review). Article classification under different supply chain themes

Themes	Subthemes	Specific	Article
Impact (39)	Ordinary (15)		Yamin (2021); McGrath et al. (2021); Negri et al. (2021); Mayor et al. (2021); Sharma et al. (2021); Klymenko and Lillebrygfjeld Halse (2021); Bechtsis et al. (2021); Schaltegger (2020); Jamshidieini and Rezaie (2020); Yadav and Barve (2019); Furman and Papavasiliou (2018); Oliver (2018); Freeman et al. (2017); Beddington et al. (2012); Leary et al. (2012); Howard et al. (2009)
	Special (23)	Agriculture (17)	Adelodun et al. (2021); Mills et al. (2021); Cristiano (2021); Yoshida and Yagi (2021); Suyo (2021); Zollet et al. (2021); Martínez-Guido et al. (2021); Thapa Magar et al. (2021); Mwangi et al. (2021); Rasul (2021); Mor et al. (2020); Khatun et al. (2020); Vecchio et al. (2020); Babacan and McHugh (2020); Ely et al. (2016); Hoy et al. (2015); King and Thobela (2014);
		Manufactory (3)	Talukder et al. (2021); Diaz-Elsayed et al. (2020); Khot and Thiagarajan (2019)
		Service industry	Adeiza et al. (2021); Sharma et al. (2020); Cheer et al. (2017)
Function (115)	Product (10)	Responsiveness/Agility (7)	Nayeri et al. (2021); Brooks et al. (2021); Emanuelsson et al. (2021); Sadeghi et al. (2021); Haapala et al. (2020); Pavlov et al. (2019); Piri et al. (2018)
		Inventory (2)	Hosseinifard and Abbasi (2018); Mardle and Metz (2017)
	Process (43)	Logistics (14)	Yazdanparast et al. (2021); Pu et al. (2021); Suryawanshi et al. (2021); Mondal and Roy (2021); Marusak et al. (2021); Ayvaz et al. (2021); Abdolazimi et al. (2021); Gupta et al. (2021); Zhu and Krikke (2020); Kayikci (2020); Jamaludin et al. (2020); Kaur and Singh (2019); Sundarakani et al. (2019); Mehmood et al. (2017)
		Reverse Logistics (1)	Stindt et al. (2017)
		Workflow (3)	Miller (2021); Burger et al. (2017); Levalle and Nof (2015)
		Vulnerability/Risk (8)	Rivera-Ferre et al. (2021); Hsu et al. (2021); Ekanayake et al. (2021); Hosseini-Motlagh et al. (2020); Sharifi et al. (2020); Sharma et al. (2020); Mousavi Ahranjani et al. (2020); Zahiri et al. (2017)
		Maintain (1)	Cretan et al. (2012)
		Produce (1)	Vicente-Vicente et al. (2021)
		Recovery (2)	Papadopoulos et al. (2017); Carlisle (2014)

		Design (9)	Lotfi et al. (2021); Sabouhi et al. (2021); Sazvar et al. (2021); Fazli-Khalaf et al. (2021); Lotfi et al. (2021a); Joshi and Sharma (2021); Chatterjee and Layton et al. (2020); de Souza et al. (2019); Jabbarzadeh et al. (2019)
		Purchase (3)	Wang et al. (2021); Mehrjerdi and Shafiee (2021); Kaur et al. (2020)
		Order (1)	Zhao et al. (2021)
	Operation (36)	Strategy (9)	Castañeda-Navarrete et al. (2021); Durmaz et al. (2021); Andres and Marcucci et al. (2020); Kogler and Rauch (2019); Rajesh (2018); Hamidieh et al. (2018); Irani and Sharif (2018); Edgeman and Wu (2016); Carvalho et al. (2011)
		Capability (3)	Michel-Villarreal et al. (2021); Reyes et al. (2021); Bhavani and Gopinath (2020)
		Offshoring (1)	Ali et al. (2021)
		Culture (1)	Soma et al. (2021)
		Supplier (4)	Fazlollahtabar and Kazemitash (2021); Pramanik et al. (2020); Xiong et al. (2020); Ivanov (2018)
		Innovation (3)	Quayson et al. (2020); Gwaka and Dubihlela et al. (2020); Asokan et al. (2017)
		Performance (13)	Hervani et al. (2021); Lotfi et al. (2021b); Shafiee et al. (2021); Moktadir et al. (2021); Fallahpour et al. (2021); Raut et al. (2021); Oh et al. (2020); Sharma and Joshi (2020); Sundarakani et al. (2020); Pashapour et al. (2019); Sahu and Sahu (2019); Jabbarzadeh et al. (2018)
		Driving (1)	Singh et al. (2018)
	Sustainability (26)	Economy (4)	Tran et al. (2021); Olagunju et al. (2021); Alonso-Muñoz et al. (2021); Brassesco et al. (2021); Ibn-Mohammed et al. (2021)
		Society (3)	Nchanji and Lutomia (2021); Jensen and Orfila (2021); Sumagaysay (2017)
		Environment (10)	Miatto et al. (2021); Ritchie (2021); Govindan and Gholizadeh (2021); Ayyildiz (2021); Karim and Nakade (2021); Yu et al. (2020); Diaz-Elsayed et al. (2020); Younis and Sundarakani (2020); Elzarka (2020); Lengnick et al. (2015)
		Low-carbon economy (3)	Yılmaz et al. (2021); Mari et al. (2016); Hoggett (2014)
		TBL (6)	Rajesh (2019); Mehrjerdi and Lotfi (2019); Rijsberman (2017); James and Friel (2015); Govindan (2014); Mari et al. (2014)
Configuration (6)	Integration (6)	Internet of things (3)	McClements (2021); Li et al. (2021); Ramirez-Peña et al. (2020)
		AI (1)	Tcholtchev and Schieferdecker (2021)
		Blockchain (1)	Naz et al. (2021)

Appendix A- 2 (Literature Review). Articles classification under research methodologies.

Category	Subcategory	Approach	Article

Conceptual (61)		General description (26)	McGrath et al. (2021); Alonso-Muñoz et al. (2021); Nchanji and Lutomia (2021); Mills et al. (2021); Mayor et al. (2021); Suyo (2021); McClements (2021); Tcholtchev and Schieferdecker (2021); Thapa Magar et al. (2021); Rasul (2021); Quayson et al. (2020); Schaltegger (2020); Jamaludin et al. (2020); Furman and Papavasiliou (2018); Oliver (2018); Rijsberman (2017); Asokan et al. (2017); Sumagaysay (2017); Cheer et al. (2017); Ely et al. (2016); Hoy et al. (2015); Hoggett (2014); King and Thobela (2014); Beddington et al. (2012); Howard et al. (2009)
		Literature review (12)	Negri et al. (2021); Castañeda-Navarrete et al. (2021); Adelodun et al. (2021); Rivera-Ferre et al. (2021); Sharma et al. (2021); Naz et al. (2021); Bechtsis et al. (2021); Ibn-Mohammed et al. (2021); Mor et al. (2020); Babacan and McHugh (2020); Khot and Thiagarajan (2019); Lengnick et al. (2015)
		Theory (23)	Ali et al. (2021); Ritchie (2021); Hsu et al. (2021); Reyes et al. (2021); Brassesco et al. (2021); Talukder et al. (2021); Chatterjee and Layton et al. (2020); Yu et al. (2020); Sharma et al. (2020); Bhavani and Gopinath (2020); Khatun et al. (2020); Diaz-Elsayed et al. (2020); Haapala et al. (2020); Diaz-Elsayed et al. (2020); Ramirez-Peña et al. (2020); Jamshidieini and Rezaie (2020); de Souza et al. (2019); Sahu and Kohli (2019); Rajesh (2018); Piri et al. (2018); Irani and Sharif (2018); Edgeman and Wu (2016); Carvalho et al. (2011)
Empirical (38)		Case study (19)	Miller (2021); Emanuelsson et al. (2021); Michel-Villarreal et al. (2021); Jensen and Orfila (2021); Govindan and Gholizadeh (2021); Marusak et al. (2021); Li et al. (2021); Adeiza et al. (2021); Klymenko and Lillebrygfjeld Halse (2021); Abdolazimi et al. (2021); Andres and Marcucci et al. (2020); Vecchio et al. (2020); Hosseinifard and Abbasi (2018); Burger et al. (2017); James and Friel (2015); Carlisle (2014); Cretan et al. (2012); Leary et al. (2012)
		Hypothetical test (12)	Hervani et al. (2021); Pu et al. (2021); Yamin (2021); Cristiano (2021); Yoshida and Yagi (2021); Zollet et al. (2021); Pashapour et al. (2019); Mardle and Metz (2017); Stindt et al. (2017); Papadopoulos et al. (2017); Levalle and Nof (2015); Govindan (2014)
		Expert interview (3)	Soma et al. (2021); Moktadir et al. (2021); Gwaka and Dubihlela et al. (2020);
		Expert seminar (4)	Mills et al. (2021); Mwangi et al. (2021); Kogler and Rauch (2019); Freeman et al. (2017)
Modeling (62)	Mathematical modelling 20	Nonlinear programming (5)	Martínez-Guido et al. (2021); Shafiee et al. (2021); Hosseini-Motlagh et al. (2020); Elzarka (2020); Sundarakani et al. (2019)
		Game theory (3)	Lotfi et al. (2021); Ekanayake et al. (2021); Mari et al. (2014)
		Mixed-integer linear (1)	Zahiri et al. (2017)

		Mean-variance (5)	Tran et al. (2021); Sabouhi et al. (2021); Brooks et al. (2021); Kayikci (2020); Mehrjerdi and Lotfi (2019); Pavlov et al. (2019)
		Robust (2)	Jabbarzadeh et al. (2019); Hamidieh et al. (2018)
		structural equation modeling (3)	Durmaz et al. (2021); Oh et al. (2020); Younis and Sundarakani (2020)
	Simulation modeling (11)		Olagunju et al. (2021); Vicente-Vicente et al. (2021); Suryawanshi et al. (2021); Mondal and Roy (2021); Yılmaz et al. (2021); Lotfi et al. (2021b); Sadeghi et al. (2021); Karim and Nakade (2021); Zhu and Krikke (2020); Kaur and Singh (2019); Ivanov (2018); Mehmood et al. (2017)
	Multicriteria decision (31)	Fuzzy theory (27)	Hervani et al. (2021); Yazdanparast et al. (2021); Miatto et al. (2021); Sazvar et al. (2021); Nayeri et al. (2021); Fazli-Khalaf et al. (2021); Lotfi et al. (2021a); Mehrjerdi and Shafiee (2021); Ayvaz et al. (2021); Zhao et al. (2021); Ayyildiz (2021); Joshi and Sharma (2021); Gupta et al. (2021); Fazlollahtabar and Kazemitash (2021); Fallahpour et al. (2021); Sharifi et al. (2020); Pramanik et al. (2020); Sharma and Joshi (2020); Sharma et al. (2020); Sundarakani et al. (2020); Xiong et al. (2020); Mousavi Ahranjani et al. (2020); Kaur et al. (2020); Sahu and Sahu (2019); Yadav and Barve (2019); Jabbarzadeh et al. (2018); Mari et al. (2016);
		Trial and Evaluation Laboratory (2)	Mithun Ali et al. (2019); Rajesh (2019)
		Interpretive structural modeling (2)	Wang et al. (2021); Singh et al. (2018)

Appendix A- 3 (Literature Review). Validation approaches of the reviewed articles.

Type	Articles
Applications (84)	Ali et al. (2021); Yazdanparast et al. (2021); Pu et al. (2021); Yamin (2021); McGrath et al. (2021); Castañeda-Navarrete et al. (2021); Miller (2021); Vicente-Vicente et al. (2021); Suryawanshi et al. (2021); Durmaz et al. (2021); Sabouhi et al. (2021); Sazvar et al. (2021); Nayeri et al. (2021); Brooks et al. (2021); Fazli-Khalaf et al. (2021); Emanuelsson et al. (2021); Lotfi et al. (2021a); Alonso-Muñoz et al. (2021); Wang et al. (2021); Michel-Villarreal et al. (2021); Rivera-Ferre et al. (2021); Jensen and Orfila (2021); Govindan and Gholizadeh (2021); Mehrjerdi and Shafiee (2021); Tcholtchev and Schieferdecker (2021); Hsu et al. (2021); Zollet et al. (2021); Li et al. (2021); Martínez-Guido et al. (2021); Yılmaz et al. (2021); Ayvaz et al. (2021); Reyes et al. (2021); Zhao et al. (2021); Ayyildiz (2021); Joshi and Sharma (2021); Gupta et al. (2021); Ekanayake et al. (2021); Fazlollahtabar and Kazemitash (2021); Talukder et al. (2021); Moktadir et al. (2021); Karim and Nakade (2021); Fallahpour et al. (2021); Hosseini-Motlagh et al. (2020); Sharifi et al. (2020); Oh et al. (2020); Chatterjee and Layton et al. (2020); Pramanik et al. (2020); Zhu and Krikke (2020); Kayikci (2020); Andres and Marcucci et al. (2020); Khatun et al. (2020); Vecchio et al. (2020); Younis and Sundarakani (2020); Elzarka (2020); Sharma and Joshi (2020); Sharma et al. (2020); Sundarakani et al. (2020); Xiong et al. (2020); Mousavi Ahranjani et al. (2020); Kaur et al. (2020); Kaur and Singh (2019); Sundarakani et al. (2019); Pashapour et al. (2019); Mithun et al. (2019); Sahu and Sahu (2019); Yadav and Barve (2019); Rajesh (2019); Jabbarzadeh et al. (2019); Kogler and Rauch (2019); Sahu and Kohli (2019); Pavlov et al. (2019); Jabbarzadeh et al. (2018); Hamidieh et al. (2018); Piri et al. (2018); Zahiri et al. (2017); Burger et al. (2017); Mehmood et al. (2017);

	Mari et al. (2016); Edgeman and Wu (2016); Levalle and Nof (2015); James and Friel (2015); Mari et al. (2014); Cretan et al. (2012); Cretan et al. (2012); Leary et al. (2012)
Theoretical approach (67)	Hervani et al. (2021); Miatto et al. (2021); Negri et al. (2021); Adelodun et al. (2021); Soma et al. (2021); Ritchie (2021); Emanuelsson et al. (2021); Nchanji and Lutomia (2021); Mills et al. (2021); Mayor et al. (2021); Marusak et al. (2021); Cristiano (2021); Yoshida and Yagi (2021); Suyo (2021); McClements (2021); Thapa Magar et al. (2021); Sharma et al. (2021); Adeiza et al. (2021); Klymenko and Lillebrygfjeld Halse (2021); Abdolazimi et al. (2021); Brassesco et al. (2021); Naz et al. (2021); Bechtsis et al. (2021); Mwangi et al. (2021); Rasul (2021); Raut et al. (2021); Ibn-Mohammed et al. (2021); Yu et al. (2020); Sharma et al. (2020); Mor et al. (2020); Bhavani and Gopinath (2020); Quayson et al. (2020); Gwaka and Dubihlela et al. (2020); Diaz-Elsayed et al. (2020); Haapala et al. (2020); Diaz-Elsayed et al. (2020); Ramirez-Peña et al. (2020); Babacan and McHugh (2020); Schaltegger (2020); Jamshidieini and Rezaie (2020); Jamaludin et al. (2020); de Souza et al. (2019); Khot and Thiagarajan (2019); Rajesh (2018); Furman and Papavasiliou (2018); Oliver (2018); Irani and Sharif (2018); Singh et al. (2018); Hosseinifard and Abbasi (2018); Mardle and Metz (2017); Rijsberman (2017); Freeman et al. (2017); Stindt et al. (2017); Asokan et al. (2017); Papadopoulos et al. (2017); Sumagaysay (2017); Cheer et al. (2017); Ely et al. (2016); Hoy et al. (2015); Lengnick et al. (2015); Govindan (2014); Hoggett (2014); Carlisle (2014); King and Thobela (2014); Beddington et al. (2012); Carvalho et al. (2011); Howard et al. (2009)
Numerical examples (9)	Tran et al. (2021); Olagunju et al. (2021); Lotfi et al. (2021); Mondal and Roy (2021); Lotfi et al. (2021b); Shafiee et al. (2021); Mehrjerdi and Lotfi (2019); Ivanov (2018)

Appendix A- 4 (Literature Review). Articles classification under industries addressed.

Category	Subcategory	Specific	Article
Primary industry (55)	Agriculture (44)	Food safety (28)	Ali et al. (2021); Pu et al. (2021); Olagunju et al. (2021); Miller (2021); Adelodun et al. (2021); Vicente-Vicente et al. (2021); Brooks et al. (2021); Michel-Villarreal et al. (2021); Rivera-Ferre et al. (2021); Jensen and Orfila (2021); Marusak et al. (2021); McClements (2021); Zollet et al. (2021); Martínez-Guido et al. (2021); Joshi and Sharma (2021); Brassesco et al. (2021); Rasul (2021); Mor et al. (2020); Zhu and Krikke (2020); Jamaludin et al. (2020); Mithun et al. (2019); Furman and Papavasiliou (2018); Oliver (2018); Irani and Sharif (2018); Hoy et al. (2015); Lengnick et al. (2015); James and Friel (2015); Beddington et al. (2012)
		Vegetables (1)	Cristiano (2021)
		Soybeans (1)	Nchanji and Lutomia (2021)
		Tea (1)	Mwangi et al. (2021)
		Maize (1)	Ely et al. (2016)
		General Agriculture (10)	Thapa Magar et al. (2021); Gupta et al. (2021); Yu et al. (2020); Bhavani and Gopinath (2020); Quayson et al. (2020); Vecchio et al. (2020); Babacan and McHugh (2020); Sharma et al. (2020); Sundarakani et al. (2020); Carlisle (2014); King and Thobela
		Fertilizers (2)	Tran et al. (2021); Hamidieh et al. (2018)
	Wood (1)		Kogler and Rauch (2019)

	livestock (2)		Gwaka and Dubihlela et al. (2020); Rijsberman (2017)
	Palm oil (2)		Fallahpour et al. (2021); Khatun et al. (2020)
	Farm (1)		Yoshida and Yagi (2021)
	Fishery(5)		Soma et al. (2021); Mills et al. (2021); Suyo (2021); Mardle and Metz (2017); Sumagaysay (2017)
Secondary industry (32)	Manufacturing (26)	Petroleum (3)	Yazdanparast et al. (2021); Sabouhi et al. (2021); Pashapour et al. (2019)
		Apparel industry (5)	Castañeda-Navarrete et al. (2021); Hsu et al. (2021); Reyes et al. (2021); Moktadir et al. (2021); Mari et al. (2016)
		Tire (1)	Fazli-Khalaf et al. (2021)
		Automobile (2)	Mehrjerdi and Lotfi (2019); Khot and Thiagarajan (2019)
		Bioethanol (1)	Mousavi Ahranjani et al. (2020)
		Material (2)	Piri et al. (2018); Burger et al. (2017)
		Dairy (1)	Talukder et al. (2021)
		Electronic manufacturing (2)	Miatto et al. (2021); Rajesh (2019)
		Clear and waste (8)	Alonso-Muñoz et al. (2021); Govindan and Gholizadeh (2021); Yılmaz et al. (2021); Ayvaz et al. (2021); Karim and Nakade (2021); Filipić et al. (2021); Diaz-Elsayed et al. (2020); Stindt et al. (2017); Mari et al. (2014)
	Light Industrial (4)	Drug (4)	Abdolazimi et al. (2021); Sahu and Sahu (2019); Sahu and Kohli (2019); Zahiri et al. (2017)
	Construction (2)	General (2)	Li et al. (2021); Ekanayake et al. (2021)
Trial and Evaluation Laboratory (31)	Trial (5)	Cross-border (1)	Sundarakani et al. (2020)
		Shipping (4)	Mondal and Roy (2021); Kayikci (2020); Kaur and Singh (2019); Sundarakani et al. (2019)
	Transportation (2)	Aviation (1)	Cretan et al. (2012)
		Shipbuilding (1)	Ramirez-Peña et al. (2020)
	Retail (3)	Fast-moving consumer goods (1)	Elzarka (2020)
		Grocery (1)	Suryawanshi et al. (2021)
		Digital supplier (1)	Sharma and Joshi (2020)
	Internet (5)	Big Data (2)	Papadopoulos et al. (2017); Mehmood et al. (2017)
		AI (2)	Naz et al. (2021); Bechtsis et al. (2021)
		Blockchain (1)	Lotfi et al. (2021b)
	Tourism (1)		Cheer et al. (2017)
	Energy (12)	Electrical (5)	Lotfi et al. (2021); Nayeri et al. (2021); Hosseini-Motlagh et al. (2020); Jamshidieini and Rezaie (2020); Jabbarzadeh et al. (2019)
		Energy (7)	Lotfi et al. (2021a); Mehrjerdi and Shafiee (2021); Sharifi et al. (2020); Chatterjee and Layton et al. (2020); Mehmood et al. (2017); Leary et al. (2012); Howard et al. (2009)

	Health (3)	Medical treatment (3)	Ritchie (2021); Adeiza et al. (2021); Hosseinifard and Abbasi (2018)
Multi-industry (7)	Hervani et al. (2021); Yamin (2021); McGrath et al. (2021); Emanuelsson et al. (2021); Sharma et al. (2020); Diaz-Elsayed et al. (2020); Asokan et al. (2017)		
None (35)	Negri et al. (2021); Durmaz et al. (2021); Sazvar et al. (2021); Wang et al. (2021); Mayor et al. (2021); Tcholtchev and Schieferdecker (2021); Sharma et al. (2021); Klymenko and Lillebrygfjeld Halse (2021); Sadeghi et al. (2021); Zhao et al. (2021); Ayyildiz (2021); Shafiee et al. (2021); Fazlollahtabar and Kazemitash (2021); Raut et al. (2021); Ibn-Mohammed et al. (2021); Oh et al. (2020); Pramanik et al. (2020); Andres and Marcucci et al. (2020); Haapala et al. (2020); Younis and Sundarakani (2020); Schaltegger (2020); Xiong et al. (2020); Kaur et al. (2020); Yadav and Barve (2019); de Souza et al. (2019); Pavlov et al. (2019); Jabbarzadeh et al. (2018); Rajesh (2018); Ivanov (2018); Singh et al. (2018); Freeman et al. (2017); Edgeman and Wu (2016); Levalle and Nof (2015); Govindan (2014); Carvalho et al. (2011)		

Appendix B- 1 (Analysis). Assessment of Normality

Variable	min	max	skew	c.r.	kurtosis	c.r.
OPEP6	1	5	-0.704	-6.581	0.701	3.279
CU6	1	5	-0.381	-3.568	-0.132	-0.616
CU5	1	5	-0.755	-7.063	0.491	2.297
RE4	1	5	-0.599	-5.605	-0.198	-0.925
SOCP6	1	5	-0.664	-6.211	0.522	2.440
SOCP5	1	5	-0.506	-4.73	-0.014	-0.068
SOCP4	1	5	-0.714	-6.678	0.194	0.907
SOCP3	1	5	-0.696	-6.515	0.600	2.808
SOCP2	1	5	-0.615	-5.75	0.286	1.336
SOCP1	1	5	-0.812	-7.595	**0.873**	4.085
ECOP6	1	5	-0.671	-6.274	0.114	0.532
ECOP5	1	5	-0.584	-5.463	0.384	1.795
ECOP4	1	5	-0.645	-6.035	0.070	0.329
ECOP3	1	5	-0.577	-5.394	**-0.009**	-0.04
ECOP2	1	5	-0.575	-5.381	**0.004**	0.019
ECOP1	1	5	-0.502	-4.693	-0.125	-0.583
OPEP5	1	5	-0.464	-4.337	-0.06	-0.279
OPEP4	1	5	-0.710	-6.639	0.353	1.649
OPEP3	1	5	-0.553	-5.171	0.103	0.482
OPEP2	1	5	-0.613	-5.735	0.216	1.01
OPEP1	1	5	-0.611	-5.713	0.372	1.738
RL6	1	5	-0.445	-4.163	-0.088	-0.41
RL3	1	5	-0.419	-3.915	-0.012	-0.058
RL2	1	5	-0.424	-3.964	-0.132	-0.617
RL1	1	5	-0.473	-4.427	-0.258	-1.205
SM6	1	5	-0.651	-6.094	0.510	2.384
SM5	1	5	-0.531	-4.971	0.187	0.874
SM4	1	5	-0.433	-4.05	-0.148	-0.69

SM3	1	5	-0.537	-5.022	0.197	0.92
SM2	1	5	-0.408	-3.814	-0.363	-1.696
SM1	1	5	-0.669	-6.259	0.575	2.691
CDI7	1	5	-0.678	-6.339	0.359	1.681
CDI5	1	5	-0.624	-5.839	-0.269	-1.26
CDI4	1	5	-0.387	-3.618	-0.350	-1.637
CDI2	1	5	-0.452	-4.232	-0.040	-0.186
CDI1	1	5	-0.521	-4.875	-0.132	-0.619
DM3	1	5	-0.467	-4.368	-0.223	-1.043
DM2	1	5	-0.545	-5.094	-0.022	-0.101
DM1	1	5	-0.546	-5.103	0.288	1.349
SPD6	1	5	-0.44	-4.12	-0.265	-1.241
SPD5	1	5	-0.398	-3.72	-0.223	-1.042
SPD4	1	5	-0.669	-6.256	-0.148	-0.693
SPD3	2	5	-0.485	-4.541	-0.473	-2.21
SPD2	2	5	-0.33	-3.085	-0.441	-2.063
SPD1	1	5	-0.536	-5.016	0.285	1.331
IR3	1	5	-0.583	-5.456	0.215	1.003
IR2	1	5	-0.474	-4.433	0.153	0.717
IR1	1	5	-0.365	-3.412	-0.317	-1.484
IGM11	1	5	-0.596	-5.571	0.140	0.654
IGM10	1	5	-0.543	-5.076	0.185	0.866
IGM9	1	5	-0.397	-3.713	-0.310	-1.451
IGM7	1	5	-0.625	-5.845	0.355	1.661
IGM5	1	5	**-0.840**	-7.859	0.542	2.534
IGM4	1	5	-0.544	-5.093	0.034	0.161
IGM3	1	5	-0.535	-5.007	0.235	1.097
IGM1	1	5	-0.636	-5.945	0.414	1.938
ECC3	1	5	-0.612	-5.725	0.368	1.722
ECC2	1	5	-0.475	-4.444	0.054	0.254
ECC1	2	5	-0.376	-3.518	**-0.568**	-2.657
EP4	1	5	-0.644	-6.025	0.348	1.626
EP3	1	5	-0.561	-5.248	0.316	1.477
EP2	1	5	-0.511	-4.779	-0.309	-1.444
EP1	1	5	-0.736	-6.882	0.700	3.275
ENVP3	1	5	-0.548	-5.127	0.051	0.236
ENVP2	1	5	-0.542	-5.075	-0.068	-0.318
ENVP1	1	5	-0.528	-4.94	0.082	0.385
AG1	1	5	-0.419	-3.917	-0.102	-0.477
AG2	1	5	-0.582	-5.445	0.609	2.848
AG3	1	5	-0.469	-4.383	-0.179	-0.837
AG5	1	5	-0.482	-4.512	-0.065	-0.305
CU1	1	5	-0.427	-3.997	-0.028	-0.132
CU2	1	5	-0.292	-2.731	-0.184	-0.862
CU3	1	5	-0.482	-4.508	0.010	0.049
CU4	2	5	-0.497	-4.65	-0.524	-2.451

RE1	1	5	-0.477	-4.458	0.094	0.441
RE2	2	5	-0.381	-3.567	-0.463	-2.167
RE3	1	5	-0.651	-6.09	0.406	1.898
CC1	1	5	-0.674	-6.309	-0.013	-0.059
CC2	1	5	-0.588	-5.502	0.144	0.672
CC3	1	5	-0.676	-6.328	0.487	2.276
CC4	1	5	-0.643	-6.012	0.112	0.525
SCRec4	1	5	-0.403	-3.767	-0.054	-0.251
SCRec3	1	5	-0.417	-3.897	-0.104	-0.488
SCRec2	1	5	-0.317	-2.968	-0.109	-0.508
SCRec1	1	5	**-0.281**	-2.632	-0.302	-1.413
SCSei3	1	5	-0.455	-4.252	0.166	0.777
SCSei2	1	5	-0.491	-4.595	0.133	0.622
SCSei1	1	5	-0.525	-4.911	0.167	0.779
SCSen5	1	5	-0.410	-3.839	0.152	0.713
SCSen4	1	5	-0.297	-2.778	-0.026	-0.12
SCSen3	1	5	-0.497	-4.648	0.098	0.458
SCSen2	1	5	-0.388	-3.626	-0.125	-0.586
SCSen1	1	5	-0.587	-5.494	0.317	1.481
Multivariate					819.415	**70.621**

Source from research results of SPSS 26

Appendix B- 2 (Analysis). Factor weight score

	SCSen5	SCSen4	SCSen3	SCSen2	SCSen1	
SC Sen	0.14	0.135	0.13	0.15	0.142	
	SCSei3	SCSei2	SCSei1			
SC Sei	0.186	0.16	0.324			
	SCRec4	SCRec3	SCRec2	SCRec1		
SC Rec	0.099	0.121	0.148	0.105		
	CC4	CC3	CC2	CC1		
CC	0.134	0.201	0.152	0.199		
	RE4	RE3	RE2	RE1		
RE	0.196	0.134	0.144	0.15		
	CU6	CU5	CU4	CU3	CU2	CU1
CU	0.088	0.116	0.136	0.091	0.071	0.075
	AG5	AG3	AG2	AG1		
AG	0.168	0.084	0.148	0.125		
	SPD6	SPD1	SPD2	SPD3	SPD5	
SPD	0.1	0.114	0.17	0.159	0.11	
	EP1	EP2	EP3	EP4		
EP	0.166	0.195	0.18	0.151		

	ECC1	ECC2	ECC3				
ECC	0.187	0.189	0.161				
	IGM11	IGM10	IGM1	IGM3	IGM4	IGM5	IGM7
IGM	0.107	0.115	0.122	0.1	0.108	0.121	0.109
	IR1	IR2	IR3				
IR	0.155	0.201	0.22				
	DM1	DM2	DM3				
DM	0.223	0.274	0.155				
	CDI1	CDI2	CDI4	CDI5	CDI7		
CDI	0.157	0.115	0.154	0.149	0.155		
	SM6	SM1	SM2	SM3	SM4	SM5	
SM	0.109	0.164	0.134	0.119	0.122	0.139	
	RL1	RL2	RL3	RL6			
RL	0.17	0.166	0.137	0.185			
	ENVP1	ENVP2	ENVP3				
ENVP	0.219	0.18	0.232				
	OPEP6	OPEP1	OPEP2	OPEP3	OPEP4	OPEP5	
OPEP	0.122	0.109	0.129	0.128	0.101	0.13	
	ECOP6	ECOP1	ECOP2	ECOP3	ECOP4	ECOP5	
ECOP	0.127	0.12	0.101	0.109	0.14	0.137	
	SOCP6	SOCP1	SOCP2	SOCP3	SOCP4	SOCP5	
SOCP	0.095	0.137	0.122	0.105	0.111	0.116	

Appendix B- 3 (Analysis). One-factor congeneric measurement models

The final one-factor congeneric measurement models for each latent construct are presented below, along with their factor score weights and respective model fit indices.

Supply chain resilience:

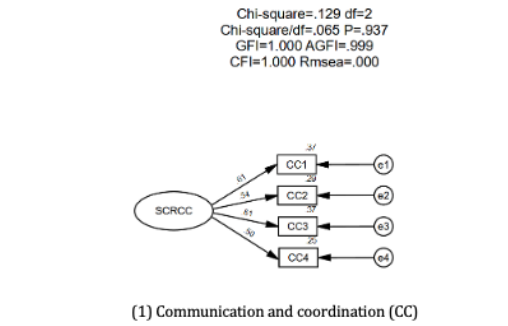

(1) Communication and coordination (CC)

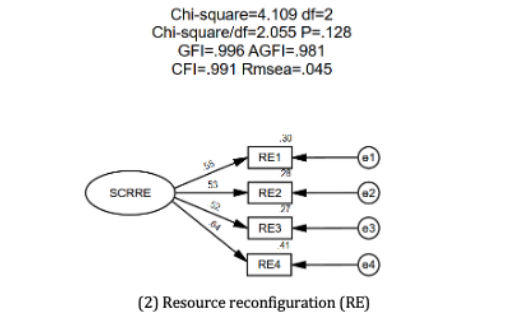

(2) Resource reconfiguration (RE)

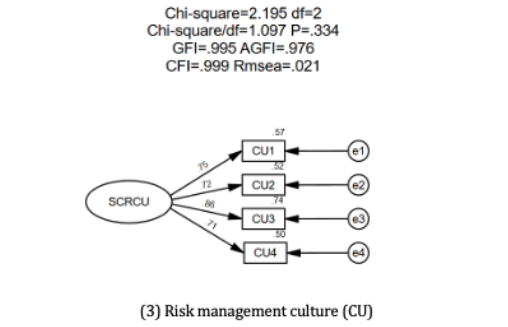

(3) Risk management culture (CU)

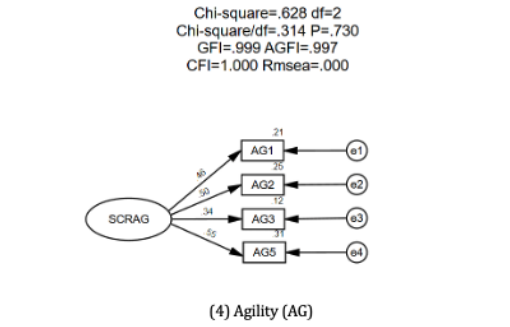

(4) Agility (AG)

Supply chain dynamic capability

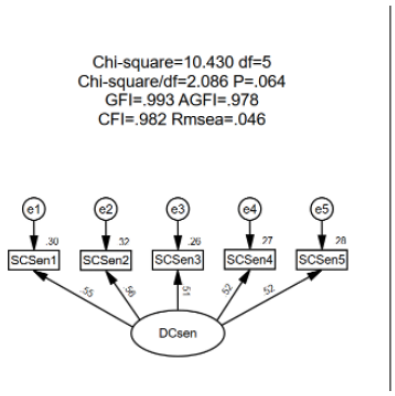

(1) SC sensing (SC Sen)

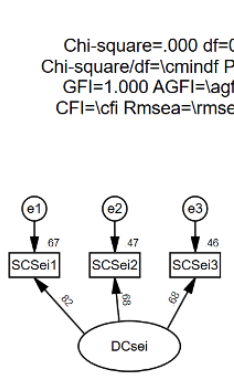

(2) SC seizing (SC SEI)

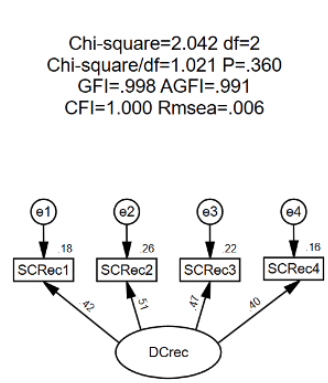

(3) SC reconfiguring (REC)

Sustainable Supply Chain Practices

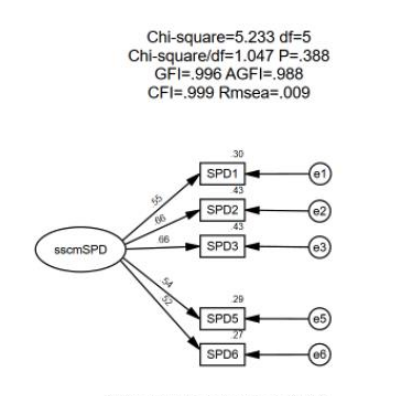

(1) Sustainable Product Design (SPD)

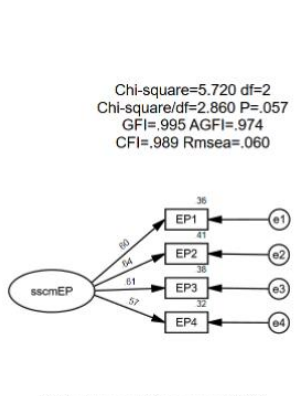

(2) Environmental Procurement (EP)

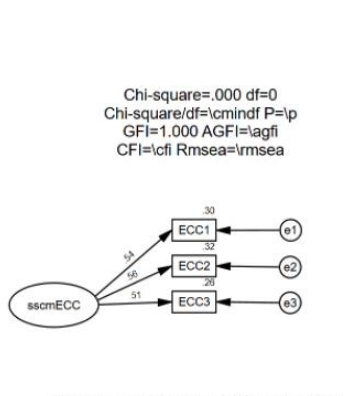

(3) Environmental Customer Collaboration (ECC)

The EFA results indicated to the application of four items to measure Learning capacity. However, the analysis of discriminant validity (as discussed in chapter 6.4.3) led to the elimination of the fourth item (SPD4) in the final congeneric measurement model, due to it has a low loading and the result while increasing the model fit of this construction. Meanwhile, Jarvis et al. (2003) also claims removing some specific observation variable from a construction without affecting the meaning of the construction.

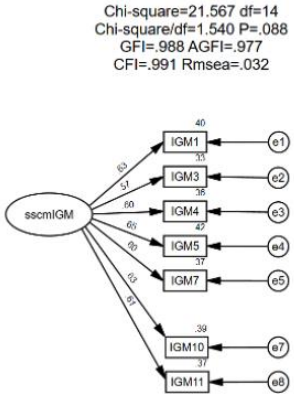

(4) Internal Green Management (IGM)

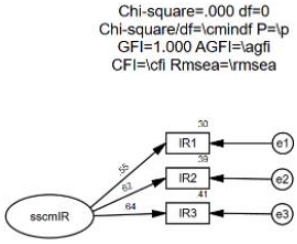

(5) Investment Recovery (IR)

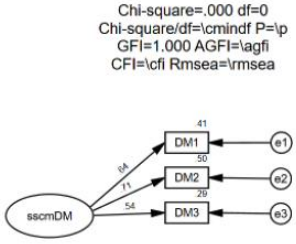

(6) Diversity Management (DM)

Above the analysis of IGM, according to modification indices (MI) and factor loading, deleting the IGM9 can improve the model fit.

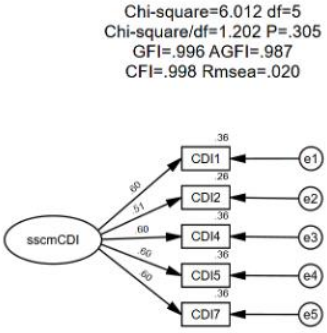

(7) Community Development and Involvement (CDI)

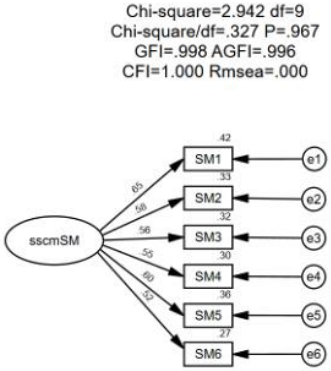

(8) Safety Management (SM)

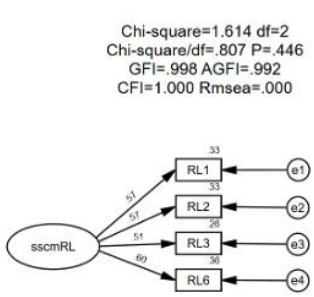

(9) Reverse logistics (RL)

Sustainable Supply Chain Performance

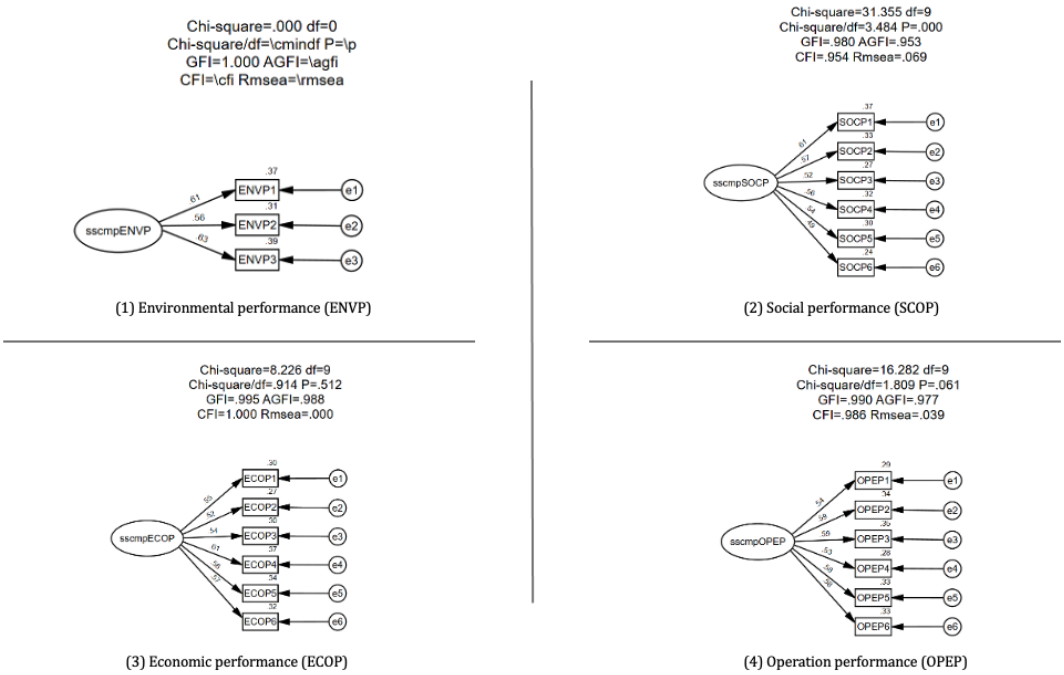

Refer to MI, removing SCOP 5 rather than SCOP3, the model fit can get more benefits. But the result shows the loading become more worse. Then, changing to remove the SOCP 6. But the results show that the loading of SOCP3 becomes worse, so that deleting SOCP3. The results show that the loading of SOCP2 and SOCP4 becomes lower. Finally, compared with the original SOCP model, although the model fit is not good, it is still within an acceptable range, and the loading value is also within an acceptable range, so SOCP is not adjusted for the time being. Finally, compared with the original SOCP model, although the model fit is not good, it is still within an acceptable range, and the loading value is also within an acceptable range, so SOCP is not adjusted for the time being.

As a result, all one-factor congeneric measurement models present good model fit in regard to the goodness-of-fit criteria defined for this research and qualified for the computation of composite scores, used in the final structural model

Appendix B- 4 (Analysis). Convergent validity of measurements

Convergent validity of supply chain dynamic capabilities (SCDC)

Construction	Item	Parameter Significance Estimation				Factor Loading	Reliability	Composite Reliability	Convergent Validity
		Unstd	S.E.	T-value	P	Std.	SMC	CR	AVE
SC Sen	SCSen2	1.029	.132	7.807	***	.562	.316	.665	.284
	SCSen3	.927	.124	7.480	***	.515	.265		
	SCSen4	.904	.121	7.501	***	.517	.267		
	SCSen5	.909	.120	7.559	***	.525	.276		
	SCSen1	1.000				.546	.298		
SC Sei	SCSei1	1.000				.654	.428	.542	.289
	SCSei2	.667	.138	4.835	***	.445	.198		
	SCSei3	.735	.153	4.803	***	.490	.240		
SC rec	SCRec1	1.000				.420	.176	.506	.205
	SCRec2	1.180	.246	4.790	***	.513	.263		
	SCRec3	1.163	.243	4.777	***	.473	.224		
	SCRec4	.917	.202	4.533	***	.397	.158		

Convergent validity of Supply chain resilience (SCR)

Construction	Item	Parameter Significance Estimation				Factor Loading	Reliability	Composite Reliability	Convergent Validity
		Unstd	S.E.	T-value	P	Std.	SMC	CR	AVE
CC	CC1	1.000				.606	.367	.652	.320
	CC2	.931	.119	7.808	***	.541	.293		
	CC3	1.017	.126	8.097	***	.611	.373		
	CC4	.840	.112	7.475	***	.497	.247		
RE	RE1	1.000				.550	.303	.647	.316
	RE2	.958	.128	7.460	***	.533	.284		
	RE3	.960	.130	7.367	***	.519	.269		

	RE4	1.206	.155	7.795	***	.637	.406		
CU	CU1	1.000				.442	.195	.678	.264
	CU2	.908	.148	6.137	***	.415	.172		
	CU3	1.169	.171	6.833	***	.507	.257		
	CU4	1.458	.197	7.403	***	.626	.392		
	CU5	1.370	.189	7.248	***	.584	.341		
	CU6	1.015	.154	6.608	***	.474	.225		
AG	AG1	1.000				.462	.213	.526	.222
	AG2	1.028	.192	5.347	***	.499	.249		
	AG3	.734	.160	4.575	***	.344	.118		
	AG5	1.204	.226	5.317	***	.553	.306		

Convergent validity of Sustainable Supply chain management (SSCM)

Construction	Item	Parameter Significance Estimation				Factor Loading	Reliability	Composite Reliability	Convergent Validity
		Unstd	S.E.	T-value	P	Std.	SMC(loading²)	CR	AVE
SPD	SPD5	1.000				.541	.293	.725	.348
	SPD3	1.278	.137	9.339	***	.658	.433		
	SPD2	1.202	.129	9.345	***	.660	.436		
	SPD1	1.017	.119	8.548	***	.551	.304		
	SPD6	.996	.120	8.267	***	.522	.272		
EP	EP4	.956	.110	8.723	***	.569	.324	.698	.366
	EP3	1.012	.112	9.044	***	.614	.377		
	EP2	1.062	.116	9.166	***	.639	.408		
	EP1	1.000				.597	.356		
ECC	ECC3	.978	.173	5.657	***	.510	.260	.552	.292
	ECC2	1.104	.201	5.496	***	.565	.319		
	ECC1	1.000				.544	.296		
	IGM7	1.000				.604	.365	.809	.377
IGM	IGM5	1.131	.101	11.207	***	.648	.420		

	IGM4	1.010	.095	10.671	***	.604	.365		
	IGM3	.918	.090	10.252	***	.571	.326		
	IGM1	1.031	.094	11.009	***	.631	.398		
	IGM10	1.063	.097	10.944	***	.626	.392		
	IGM11	1.064	.099	10.780	***	.612	.375		
IR	IR3	1.152	.157	7.347	***	.641	.411	.633	.366
	IR2	1.146	.154	7.422	***	.623	.388		
	IR1	1.000				.547	.299		
DM	DM3	.843	.102	8.234	***	.538	.289	.665	.401
	DM2	1.190	.150	7.911	***	.710	.504		
	DM1	1.000				.641	.411		
CDI	CDI7	1.000				.599	.359	.720	.340
	CDI5	1.066	.113	9.399	***	.603	.364		
	CDI4	1.004	.107	9.356	***	.598	.358		
	CDI2	.837	.099	8.442	***	.508	.258		
	CDI1	1.008	.107	9.389	***	.602	.362		
SM	SM5	1.000				.601	.361	.750	.335
	SM4	.881	.094	9.339	***	.552	.305		
	SM3	.957	.101	9.474	***	.563	.317		
	SM2	.920	.096	9.631	***	.577	.333		
	SM1	1.087	.105	10.334	***	.649	.421		
	SM6	.837	.093	8.961	***	.521	.271		
SPD	RL6	1.041	.132	7.908	***	.598	.358	.651	.319
	RL3	.885	.119	7.424	***	.510	.260		
	RL2	1.023	.131	7.825	***	.574	.329		
	RL1	1.000				.574	.329		

Convergent validity of Sustainable Supply chain management performance (SSCMP)

Construction	Item	Parameter Significance Estimation				Factor Loading	Reliability	Composite Reliability	Convergent Validity
		Unstd	S.E.	T-value	P	Std.	SMC	CR	AVE
ENVP	ENVP3	1.040	.145	7.146	***	.628	.394	.627	.360
	ENVP2	.944	.129	7.306	***	.561	.315		
	ENVP1	1.000				.609	.371		
OPEP	OPEP6	1.000				.578	.334	.740	.322
	OPEP4	.984	.113	8.716	***	.527	.278		
	OPEP3	1.091	.116	9.380	***	.592	.350		
	OPEP2	1.051	.113	9.324	***	.586	.343		
	OPEP1	.995	.112	8.886	***	.543	.295		
	OPEP6	1.049	.114	9.225	***	.576	.332		
ECOP	ECOP5	1.000				.584	.341	.734	.315
	ECOP4	1.098	.116	9.494	***	.607	.368		
	ECOP3	1.018	.115	8.889	***	.545	.297		
	ECOP2	.948	.111	8.564	***	.515	.265		
	ECOP1	.942	.106	8.915	***	.547	.299		
	ECOP6	.982	.108	9.114	***	.566	.320		
SOCP	SOCP5	1.000				.545	.297	.723	.304
	SOCP4	1.146	.133	8.598	***	.563	.317		
	SOCP3	.949	.116	8.169	***	.517	.267		
	SOCP2	1.092	.126	8.668	***	.571	.326		
	SOCP1	1.193	.133	8.973	***	.611	.373		
	SOCP6	.919	.116	7.909	***	.492	.242		

Appendix B- 5 (Analysis). Discriminant validity of measurements

Component	Ave	SCOP	ECOP	OPEP	RL	SM	CDI	DM	SPD	IR	IGM	ECC	EP	ENVP	AG	CU	RE	CC	REC	SEI	SEN
SCOP	.304	**.551**																			
ECOP	.315	.589	**.561**																		
OPEP	.322	.269	.323	**.567**																	
RL	.319	.398	.320	.206	**.565**																
SM	.335	.515	.463	.130	.206	**.579**															
CDI	.340	.344	.374	.397	.174	.066	**.583**														
DM	.401	.169	.144	.174	.074	.137	.138	**.633**													
SPD	.348	.128	-.061	-.060	.053	.002	-.068	-.098	**.590**												
IR	.366	.182	.311	.230	.020	.197	.016	.111	-.153	**.605**											
IGM	.377	.408	.395	.410	.204	.358	.240	.037	-.114	.314	**.614**										
ECC	.292	.285	.237	.113	.152	.190	.082	.125	.021	.098	.141	**.540**									
EP	.366	.527	.481	.264	.314	.481	.148	.068	-.018	.310	.419	.243	**.605**								
ENVP	.360	.358	.402	.256	.080	.329	.307	.218	-.252	.323	.378	.064	.276	**.600**							
AG	.222	.318	.154	.025	.226	.127	.037	.179	.313	-.137	.001	.006	.144	-.072	**.471**						
CU	.264	.311	.122	.093	.095	.250	.063	-.042	.237	.086	.116	-.005	.278	-.104	.144	**.514**					
RE	.316	.057	-.004	-.086	-.163	.258	-.217	-.091	.145	.135	-.070	.203	.142	-.057	-.107	.221	**.562**				
CC	.320	.052	.028	.000	.208	-.107	.044	-.200	.360	-.212	-.106	.062	-.095	-.372	.013	.200	.061	**.566**			
REC	.205	.147	.131	.041	.123	.160	.072	-.159	.289	-.119	-.085	.030	.267	-.166	.020	.280	.202	.463	**.453**		
SEI	.289	.060	-.146	-.279	-.031	.148	-.211	.173	.120	-.189	-.120	-.220	-.206	-.028	.314	.055	-.096	-.165	-.150	**.538**	
SEN	.284	.288	.220	-.099	.099	.209	.021	-.262	.010	.131	.138	-.082	.320	.093	.104	.179	-.061	-.006	.209	.099	**.533**

Appendix B- 6 (Analysis). Second order Construct

Second order Construct – Measurement Model Supply Chain Resilience

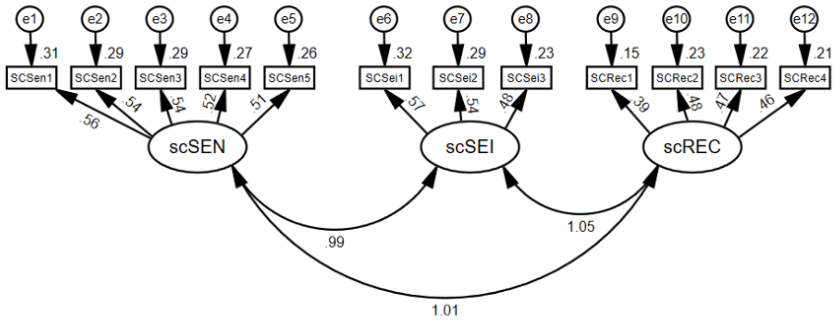

Chi-square=51.195 df=51
Chi-square/df=1.004 P=.466
GFI=.984 AGFI=.975
CFI=1.000 Rmsea=.003

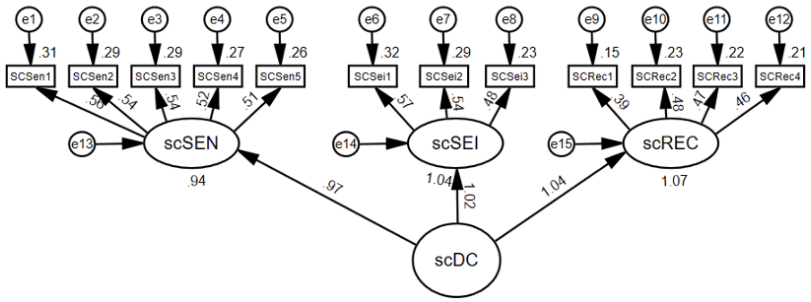

Chi-square=51.195 df=51
Chi-square/df=1.004 P=.466
GFI=.984 AGFI=.975
CFI=1.000 Rmsea=.003

Second order Construct – Measurement Model Supply Chain Resilience

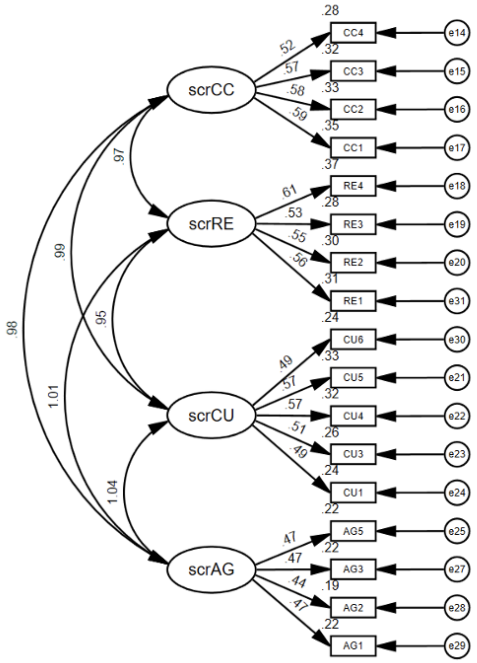

Chi-square=181.508 df=113
Chi-square/df=1.606 P=.000
GFI=.960 AGFI=.946
CFI=.964 Rmsea=.034

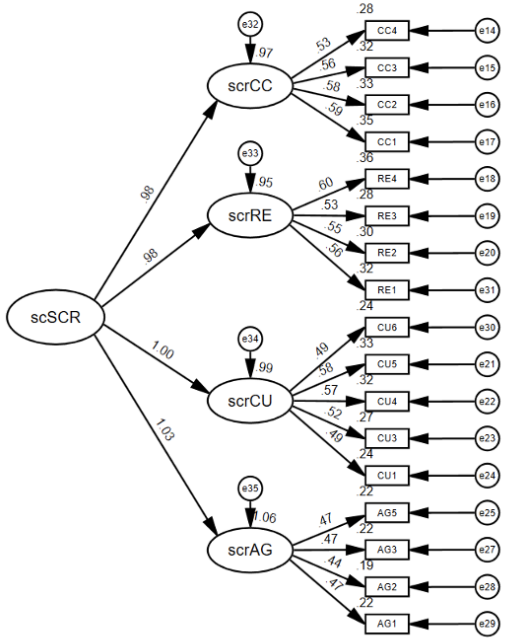

Chi-square=183.541 df=115
Chi-square/df=1.596 P=.000
GFI=.960 AGFI=.947
CFI=.964 Rmsea=.034

Second order Construct – Measurement Model Sustainable supply chain management

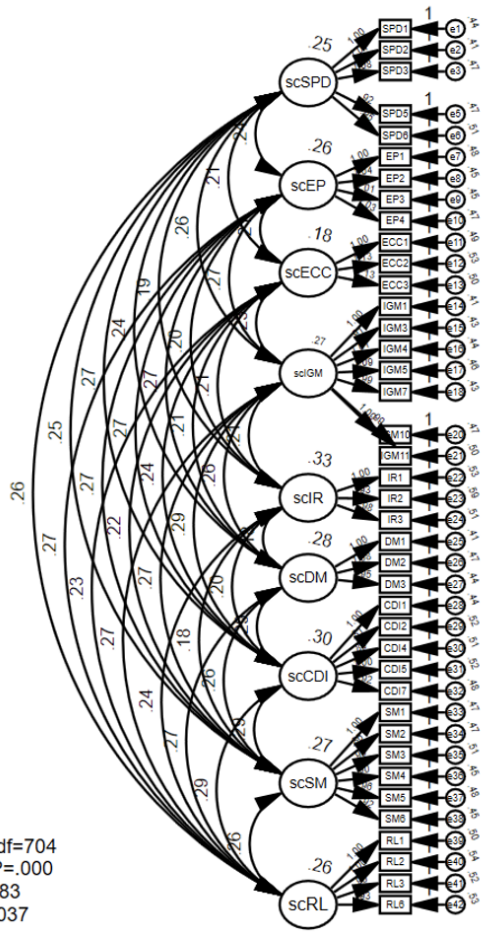

Chi-square=1198.847 df=704
Chi-square/df=1.703 P=.000
GFI=.900 AGFI=.883
CFI=.935 Rmsea=.037

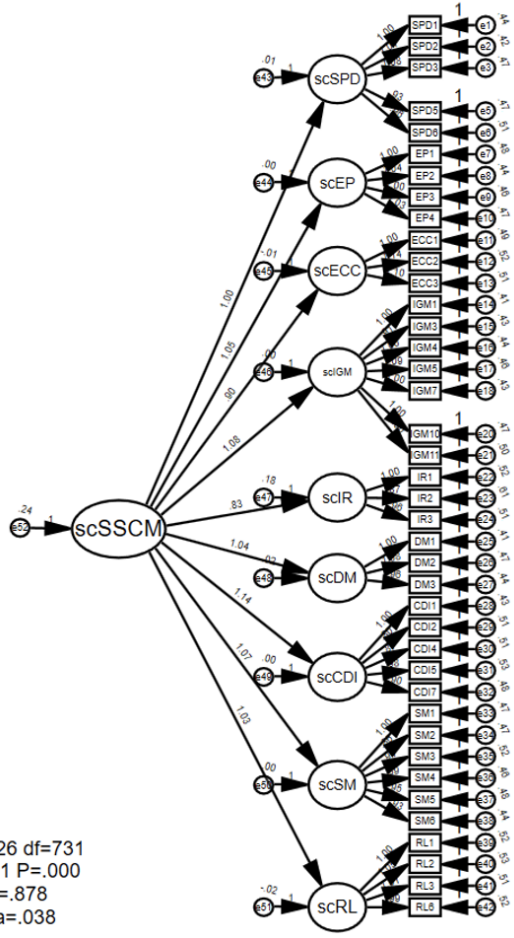

Chi-square=1280.026 df=731
Chi-square/df=1.751 P=.000
GFI=.892 AGFI=.878
CFI=.928 Rmsea=.038

Second order Construct – Measurement Model Sustainable supply chain management performance

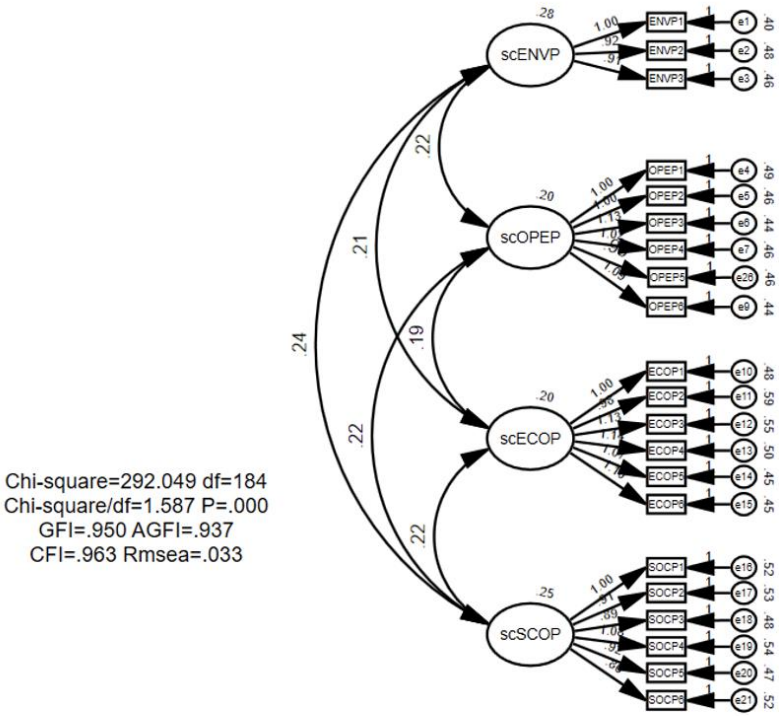

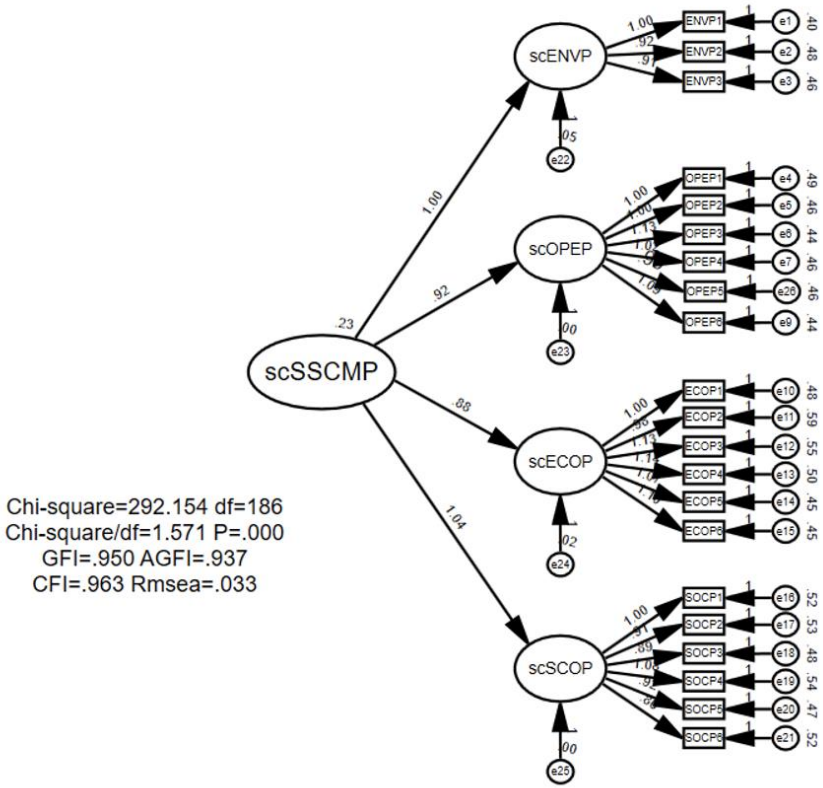

Appendix B- 7 (Analysis). Second order model (Full model)

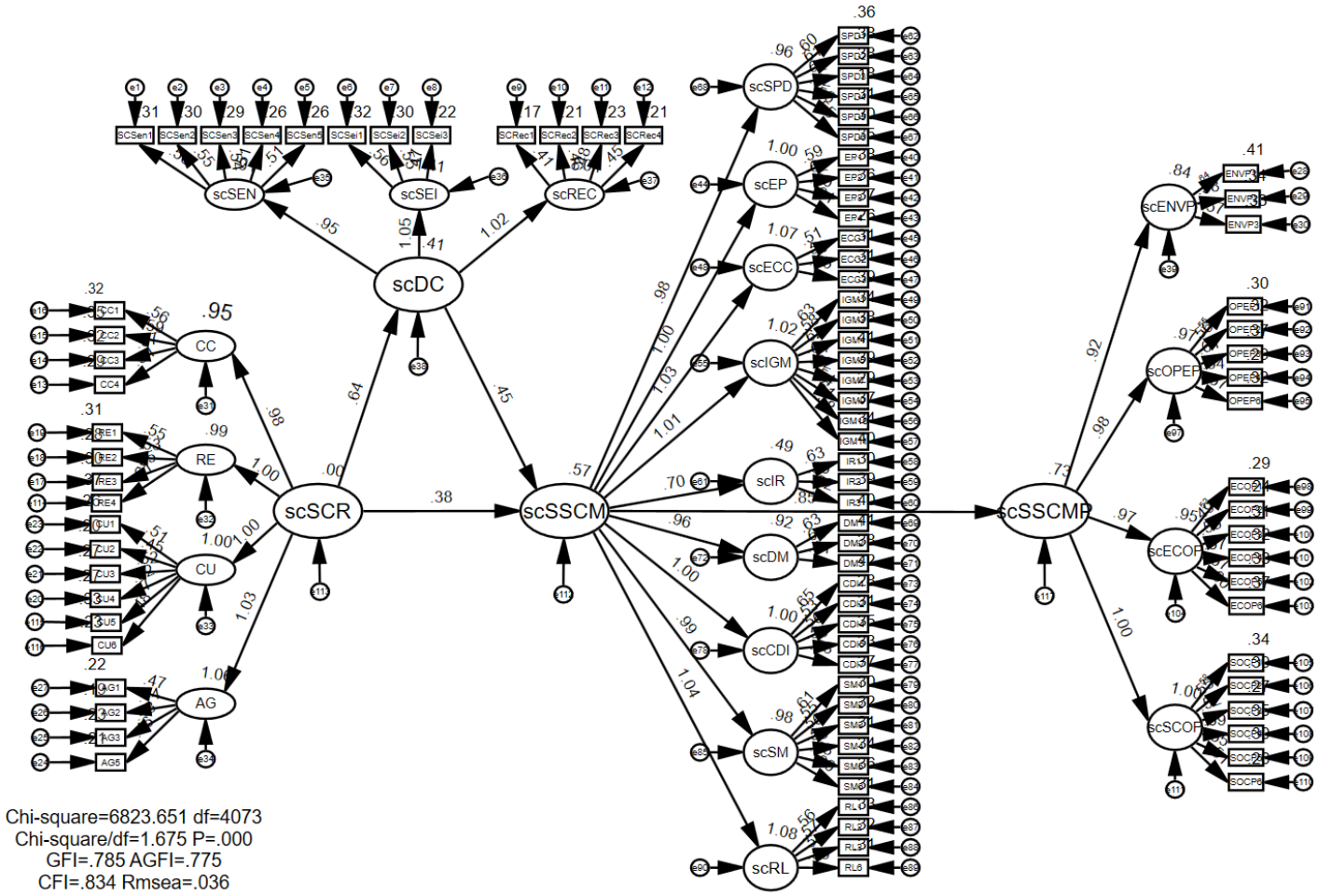

Appendix B- 8 (Analysis). Second order model (Simplification)

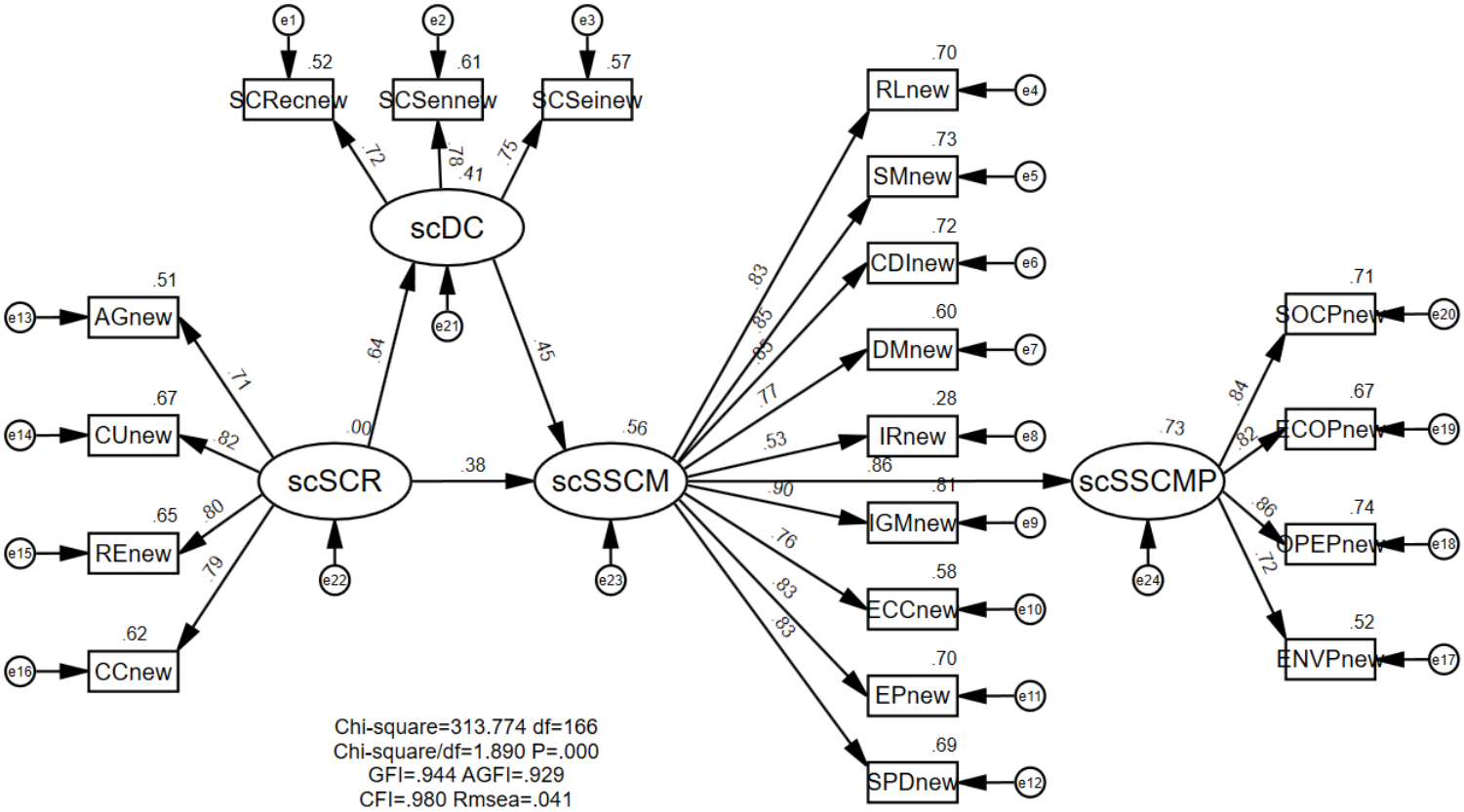

Appendix B- 9 (Analysis). Procedure used for Testing measurement model invariance

Both configural and metric invariance is examined by means of multi-group path analysis, as it allows testing if the values of model parameters vary across groups (Diamantopoulos and Siguaw, 2000, Kline, 2005). A multi-group path analysis was employed to test the final factor structure resulting from the CFA (as presented in section4.3.5) by simultaneously estimating the measurement model across two groups (Byrne, 2001). Using the categorical variable, type of company, the data set was segmented into two sub-groups 'Architects and consultants (ARC)'and 'Contractor (CON)', to determine if the factor structure is the same across groups. The company type qualified for sub-sampling and the validation of measurement invariance, as both groups were equal in size for Arc (n=203) and Con (n=203) and were not expected to differ in their answers.

Configural invariance implies the same number of factors in each group. It is given when the factor structure achieves adequate model fit "when both groups are tested together and freely (i.e., without constraints)" (Gaskin, 2012). Compared to the final measurement model, the estimation of the unconstrained multi-group model shows only a minor deterioration in the fit indices.

Metric invariance implies equal factor loadings across groups, as the factor loadings indicate the strength of the causal effect of observed indicators on its latent construct (Bollen, 1989). Hence, metric invariance provides evidence that the values on the manifest indicators have the same meaning across groups (Vandenberg and Lance, 2000).

Residual variance invariance implies items have the same internal consistency for both groups. Alternatively, for both groups, items have the same quality as measures of the underlying construct (Cheung & Rensvold, 2002).

Thus, the first step is to determine whether the factor model should be adopted for each type of group. If the baseline model for each group is not the same, then the procedure of factorial invariance analysis should not be conducted. On the other hand, if the baseline model for each group is the same, and cannot be rejected in each group, restrictive constraints can then be imposed on the model. First, factor loadings were constrained to be equal across the gender groups to test for invariance of the factor loadings ($\Lambda_1 = \Lambda_2$). If the factor loading constrained model was acceptable, then unique variances of each item were constrained to be equal across Acr and Con ($\Theta_1 = \Theta_2$). Finally, if factor loadings and unique variances of each item were equal across both groups, factor variance was constrained to be equal across type ($\Phi_m = \Phi_f$). For selection of both factor model, the analysis procedure was the same.

Since the two baseline models for each type were the same, a multi-sample analysis was then conducted. First, a multi-sample analysis with the unconstrained model showed an acceptable baseline model for many of its fields still remains insufficiently empirically researched. The parameter estimates of this model are presented in the second column of Table SCDC. Then, to test the invariance of the factor loadings across type of companies, factor loadings were constrained to be equal across the two groups. Multi-sample analysis revealed that this constrained model was acceptable ($\chi2(111) = 129.883$; NFI = .869; NNFI = .972; CFI = .977; RMSEA = .021). Also, the $\chi2$ difference test between the baseline model and the constrained model was not significant ($\chi2(9) = 6.14$, $p > 0.05$), suggesting that factor loadings of both type of company groups were invariant. The parameter estimates of this model are presented in the third column of **Appendix SCDC**.

In addition to the factor loadings, unique variances of each item were also constrained to be equal across the two groups. Multi-sample analysis showed that this constrained model was acceptable ($\chi2(125) = 142.368$; NFI = .849; NNFI = .977; CFI = .979; RMSEA = .019). Moreover, the $\chi2$ difference test between the two constrained models was not significant ($\chi2$ (14) = 12.485, $p > 0.05$). This suggested that, aside from the factor loadings, unique variances of each item were also invariant across ARC and CON. The parameter estimates of this model are presented in the fourth column of **Appendix SCDC**.

Finally, besides the constraints mentioned above, factor variances were also constrained to be equal across the two groups. Multi-sample analysis revealed this constrained model was acceptable ($\chi2$ (129) = 146.089; NFI = .845; NNFI = .978; CFI = .979; RMSEA = .018). Additionally, the $\chi2$ difference test between the two constrained models was not significant ($\chi2$ (4) = 0.3.721, $p > 0.05$). Therefore, all these results revealed that the factor loadings, unique variances and factor variances were invariant across ARC and CON. The parameter estimates of this complete invariance model are presented in the fifth column of **Appendix SCDC**.

Apart from SCDC, the study also conducted an invariance analysis of SCR, SSCM, and SSCMP, and the results are shown in **Appendix SCR, Appendix SSCM, and Appendix SSCMP**. As a result, it provides evidence that the two groups are sufficiently invariant concerning the overall factor structure.

Invariance analysis of ***Supply chain Dynamic capabilities (SCDC)***

Model (M)	CMIN (χ^2)	DF	P	NFI	NNFI	CFI	RMSEA
Unconstrained	123.743	102	0.071	0.869	0.965	0.973	0.023
$\Lambda_1 = \Lambda_2$	129.883	111	0.106	0.862	0.972	0.977	0.021
$\Lambda_1 = \Lambda_2$; $\Theta_1 = \Theta_2$	142.368	125	0.137	0.849	0.977	0.979	0.019
Complete Invariance	146.089	129	0.144	0.845	0.978	0.979	0.018

Parameter estimates of each model in ***Supply chain Dynamic capabilities (SCDC)***

Model	Unconstrained				$\Lambda_m = \Lambda_f$				$\Lambda_m = \Lambda_f$; $\Theta_m = \Theta_f$				Complete Invariance	
Type	Arc		Con		Arc		Con		Arc		Con		Arc	Con
Parameters	Unstd.	Std.	Unstd.	Std.	Unstd.	Std.	Unstd.	Std.	Unstd.	Std.	Unstd.	Std.	Unstd.	Std.
γ_1	1.000	.970	1.000	.950	1.000	.973	1.000	.953	1.000	.991	1.000	.935	1.000	.967
γ_2	1.045	1.063	1.184	.970	1.140	1.066	1.034	.978	1.114	1.065	1.114	.980	1.091	1.023
γ_3	.816	1.031	.737	1.118	.799	1.037	.774	1.135	.776	1.065	.776	1.084	.768	1.074
λ_4	.878	.512	1.094	.567	.985	.549	.985	.532	.980	.548	.980	.528	.971	.536
λ_5	.930	.589	.978	.496	.952	.588	.952	.494	.954	.548	.954	.528	.947	.537
λ_6	.901	.553	.825	.479	.867	.526	.867	.507	.861	.522	.861	.503	.859	.514
λ_7	13.000	.518	.861	.509	.842	.517	.842	.508	.839	.520	.839	.501	.834	.511
λ_8	1.089	.579	.833	.526	.984	.563	.984	.545	.964	.561	.964	.550	.976	.556
λ_9	.971	.522	.727	.465	.870	.503	.870	.487	.851	.501	.851	.490	.866	.499
λ_{10}	1.000	.447	1.000	.334	1.000	.429	1.000	.351	1.000	.408	1.000	.366	1.000	.387
λ_{11}	1.194	.523	1.039	.360	1.131	.481	1.131	.406	1.130	.463	1.130	.417	1.128	.439
λ_{12}	.955	.462	1.357	.446	1.093	.494	1.093	.389	1.137	.476	1.137	.430	1.144	.456
λ_{13}	1.000	.573	1.000	.521	1.000	.562	1.000	.528	1.000	.555	1.000	.535	1.000	.548
λ_{14}	1.000	.575	1.000	.581	1.000	.599	1.000	.526	1.000	.579	1.000	.568	1.000	.567
λ_{15}	1.064	.520	1.263	.444	1.141	.528	1.141	.428	1.161	.505	1.161	.458	1.165	.484

δ_1	.014	1.063	.020	1.249	.012	1.074	.019	1.288	.004	1.134	.026	1.175	.015	1.153
δ_2	-.029	1.131	.016	.940	-.034	1.137	.009	.956	-.033	1.134	.009	.960	-.011	1.046
δ_3	-.009	.941	-.020	.902	-.010	.946	-.026	.908	-.016	.983	-.016	.874	-.016	.934
δ_4	.501	.271	.540	.197	.503	.279	.541	.183	.522	.255	.522	.210	.520	.234
δ_5	.529	.330	.506	.337	.522	.359	.515	.277	.520	.335	.520	.323	.522	.322
δ_6	.397	.328	.587	.271	.398	.316	.589	.279	.493	.308	.493	.286	.494	.300
δ_7	.450	.213	.459	.199	.456	.244	.456	.151	.459	.227	.459	.185	.458	.208
δ_8	.450	.273	.427	.129	.451	.232	.427	.165	.440	.214	.440	.174	.440	.193
δ_9	.450	.200	.531	.112	.449	.184	.555	.123	.495	.166	.495	.134	.500	.150
δ_{10}	.520	.273	.490	.216	.524	.253	.486	.237	.506	.251	.506	.241	.504	.249
δ_{11}	.558	.336	.519	.277	.559	.316	.517	.297	.539	.314	.539	.303	.536	.309
δ_{12}	.576	.268	.628	.259	.579	.267	.629	.258	.606	.271	.606	.251	.607	.261
δ_{13}	.439	.306	.513	.229	.440	.276	.513	.257	.475	.273	.475	.253	.475	.265
δ_{14}	.545	.347	.573	.247	.555	.346	.574	.244	.567	.300	.567	.279	.568	.289
δ_{15}	.484	.263	.584	.322	.483	.301	.594	.283	.533	.300	.533	.279	.532	.287
Ψ_{31}	.230	1.000	.181	1.000	.220	1.000	.190		.228	1.000	.183	1.000	.209	1.000

Unstd. = Unstandardized estimates; Std. = standardized estimates.

Invariance analysis of ***Supply Chain Resilience (SCR)***

Model (M)	CMIN (χ^2)	DF	P	NFI	NNFI	CFI	RMSEA
Unconstrained	356.608	262	0.000	0.810	0.930	0.940	0.030
$\Lambda_m = \Lambda_f$	363.033	276	0.000	0.807	0.939	0.945	0.028
$\Lambda_m = \Lambda_f$; $\Theta_m = \Theta_f$	378.164	297	0.001	0.799	0.947	0.948	0.026
Complete Invariance	384.452	302	0.001	0.795	0.947	0.948	0.026

Parameter estimates of each model in ***Supply Chain Resilience (SCR)***

Model	Unconstrained				$\Lambda_m = \Lambda_f$				$\Lambda_m = \Lambda_f$; $\Theta_m = \Theta_f$				Complete Invariance	
Type	Arc		Con						Arc		Con		Arc	Con
Parameters	Unstd.	Std.	Unstd.	Std.	Unstd.	Std.	Unstd.	Std.	Unstd.	Std.	Unstd.	Std.	Unstd.	Std.

1	1.000	.904	1.000	1.015	1.000	.907	1.000	1.008	1.000	.935	1.000	.981	1.000	.958
2	.950	.965	.932	.983	1.007	.964	.888	.982	.936	.961	.936	.983	.941	.974
3	.771	.954	.923	1.005	.904	.959	.824	1.010	.857	.967	.857	1.004	.858	.986
4	.832	1.149	.896	1.002	.871	1.140	.852	1.011	.857	1.166	.857	.994	.855	1.062
5	.869	.512	1.106	.573	.985	.548	.985	.541	.987	.539	.987	.557	.989	.548
6	1.043	.620	.995	.533	1.023	.595	1.023	.560	1.014	.566	1.014	.584	1.019	.577
7	1.010	.575	1.134	.598	1.071	.584	1.071	.591	1.062	.576	1.062	.595	1.056	.582
8	1.000	.608	1.000	.566	1.000	.591	1.000	.583	1.000	.581	1.000	.599	1.000	.590
9	1.005	.560	.910	.507	.953	.548	.953	.519	.947	.516	.947	.544	.944	.528
10	.971	.543	1.008	.572	.983	.557	.983	.555	.982	.541	.982	.569	.981	.555
11	1.000	.540	1.000	.590	1.000	.550	1.000	.584	1.000	.552	1.000	.581	1.000	.567
12	1.339	.585	1.101	.568	1.189	.584	1.189	.564	1.181	.559	1.181	.581	1.181	.570
13	1.083	.476	.877	.494	.957	.474	.957	.494	.959	.475	.959	.496	.966	.488
14	.894	.427	.750	.427	.809	.435	.809	.423	.810	.419	.810	.439	.813	.431
15	1.000	.440	1.000	.545	1.000	.485	1.000	.509	1.000	.487	1.000	.508	1.000	.497
16	.927	.378	1.121	.559	1.049	.427	1.049	.519	1.048	.426	1.048	.519	1.057	.478
17	1.078	.439	.875	.474	.968	.409	.968	.503	.961	.407	.961	.498	.972	.460
18	.906	.390	.805	.436	.856	.379	.856	.448	.854	.369	.854	.456	.867	.421
19	1.000	.424	1.000	.509	1.000	.430	1.000	.497	1.000	.418	1.000	.510	1.000	.466
20	1.187	.628	1.081	.586	1.130	.617	1.130	.599	1.126	.591	1.126	.619	1.130	.608
21	1.426	.628	1.009	.525	1.183	.597	1.183	.553	1.164	.555	1.164	.577	1.170	.569
22	1.037	.504	.810	.483	.902	.495	.902	.492	.896	.480	.896	.501	.890	.487
1	-.036	1.319	-.001	1.005	-.035	1.300	-.004	-.004	-.042	1.359	.002	.988	-.020	1.127
2	.012	.910	-.002	1.011	.014	.919	-.004	-.004	.011	.936	-.002	1.009	.005	.973
3	.014	.931	.008	.967	.016	.928	.008	.008	.015	.924	.008	.966	.011	.950
4	.048	.817	-.008	1.030	.043	.822	-.004	-.004	.031	.874	.010	.962	.021	.919
5	.444	.254	.526	.233	.450	.245	.521	.521	.482	.230	.482	.251	.482	.237
6	.537	.394	.574	.275	.536	.356	.573	.573	.558	.308	.558	.333	.561	.324
7	.454	.394	.620	.343	.462	.381	.614	.614	.537	.349	.537	.383	.535	.370

8	.554	.180	.620	.259	.546	.185	.629	.629	.587	.175	.587	.260	.586	.217
9	.503	.152	.430	.190	.499	.143	.431	.431	.464	.136	.464	.208	.464	.177
10	.466	.192	.481	.225	.465	.167	.485	.485	.475	.165	.475	.248	.476	.211
11	.457	.143	.551	.313	.459	.182	.550	.550	.505	.182	.505	.270	.507	.229
12	.447	.193	.514	.297	.451	.235	.510	.510	.481	.237	.481	.258	.479	.247
13	.581	.183	.511	.183	.574	.189	.518	.518	.544	.176	.544	.193	.545	.186
14	.498	.227	.543	.244	.496	.225	.543	.543	.519	.225	.519	.246	.518	.238
15	.557	.342	.515	.323	.558	.341	.515	.515	.535	.312	.535	.337	.533	.325
16	.479	.291	.547	.348	.482	.303	.549	.549	.519	.305	.519	.337	.519	.322
17	.435	.295	.578	.327	.446	.310	.576	.576	.515	.293	.515	.324	.513	.308
18	.440	.314	.465	.257	.442	.300	.462	.462	.454	.266	.454	.295	.456	.279
19	.510	.370	.585	.321	.510	.350	.591	.591	.550	.338	.550	.359	.553	.348
20	.511	.331	.565	.358	.508	.341	.567	.567	.537	.332	.537	.353	.535	.339
21	.545	.385	.540	.284	.542	.354	.538	.538	.541	.320	.541	.341	.540	.333
22	.575	.262	.565	.329	.575	.301	.578	.578	.576	.290	.576	.310	.576	.300
45	.213	1.000	.256		.199	1.000	.273	1.000	.215		.260	1.000	.236	1.000

Unstd. = Unstandardized estimates; Std. = standardized estimates.

Invariance analysis of ***Sustainable Supply Chain Management (SSCM)***

Model (M)	CMIN ($\chi 2$)	DF	P	NFI	NNFI	CFI	RMSEA
Unconstrained	2442.414	1620	0.000	0.693	0.860	0.868	0.035
$\Lambda_m = \Lambda_f$	2472.304	1653	0.000	0.690	0.863	0.869	0.035
$\Lambda_m = \Lambda_f$; $\Theta_m = \Theta_f$	2533.880	1703	0.000	0.682	0.865	0.867	0.035
Complete Invariance	2554.225	1713	0.000	0.679	0.865	0.865	0.035

Parameter estimates of each model in ***Sustainable Supply Chain Management (SSCM)***

Model	Unconstrained		$\Lambda_m = \Lambda_f$		$\Lambda_m = \Lambda_f$; $\Theta_m = \Theta_f$		Complete Invariance	
Type	Arc	Con	Arc	Con	Arc	Con	Arc	Con

Parameters	Unstd.	Std.	Unstd.	Std.	Unstd.	Std.	Unstd.	Std.	Unstd.	Std.	Unstd.	Std.	Unstd.	Std.
1	1.000	.940	1.000	1.012	1.000	.938	1.000	1.013	1.000	.950	1.000	1.002	1.000	.974
2	1.159	1.037	.923	.979	1.126	1.037	.951	.982	1.024	1.035	1.024	.987	1.032	1.012
3	.991	.974	.609	1.166	.885	.972	.748	1.143	.807	1.031	.807	1.048	.816	1.038
4	1.210	1.008	.804	1.004	1.118	1.008	.874	1.005	.983	1.005	.983	1.004	.991	1.003
5	1.105	.738	.481	.556	.962	.742	.684	.592	.796	.750	.796	.613	.792	.668
6	1.020	.985	1.040	.975	1.079	.987	.978	.977	1.020	1.002	1.020	.961	1.028	.982
7	1.309	1.026	.908	.997	1.209	1.026	.987	.998	1.084	1.034	1.084	.989	1.090	1.012
8	1.130	.993	1.037	.976	1.151	.992	.995	.974	1.077	1.006	1.077	.960	1.081	.984
9	1.275	1.093	.862	1.027	1.139	1.097	.987	1.030	1.046	1.102	1.046	1.023	1.054	1.061
10	1.000	.578	1.000	.618	1.000	.584	1.000	.611	1.000	.594	1.000	.596	1.000	.596
11	1.042	.615	.998	.606	1.019	.613	1.019	.607	1.021	.608	1.021	.610	1.016	.607
12	.981	.555	1.091	.634	1.035	.581	1.035	.605	1.031	.588	1.031	.590	1.033	.591
13	1.145	.646	.965	.580	1.058	.622	1.058	.610	1.062	.616	1.062	.618	1.060	.616
14	1.000	.598	1.000	.336	1.000	.571	1.000	.393	1.000	.492	1.000	.470	1.000	.483
15	1.183	.620	1.530	.488	1.277	.625	1.277	.490	1.262	.566	1.262	.544	1.254	.555
16	1.021	.555	1.430	.485	1.148	.576	1.148	.474	1.153	.544	1.153	.521	1.145	.532
17	1.000	.619	1.000	.581	1.000	.607	1.000	.597	1.000	.610	1.000	.595	1.000	.605
18	.895	.601	1.073	.572	.968	.619	.968	.546	.972	.594	.972	.578	.965	.585
19	.939	.616	1.123	.570	1.013	.632	1.013	.545	1.021	.601	1.021	.585	1.017	.594
20	1.162	.678	1.062	.560	1.124	.652	1.124	.596	1.117	.631	1.117	.616	1.116	.625
21	1.095	.670	.994	.552	1.058	.644	1.058	.591	1.052	.625	1.052	.610	1.044	.615
22	.817	.513	1.057	.533	.916	.543	.916	.492	.920	.529	.920	.514	.916	.522
23	1.000	.740	1.000	.484	1.000	.689	1.000	.597	1.000	.592	1.000	.653	1.000	.624
24	.717	.524	1.246	.588	.851	.556	.851	.520	.886	.511	.886	.572	.878	.538
25	.770	.565	1.383	.679	.924	.604	.924	.588	.958	.568	.958	.629	.959	.601
26	1.000	.584	1.000	.618	1.000	.604	1.000	.599	1.000	.622	1.000	.586	1.000	.603
27	.983	.582	.954	.624	.970	.597	.970	.612	.969	.625	.969	.589	.964	.604
28	1.071	.592	.966	.608	1.014	.590	1.014	.609	1.015	.621	1.015	.585	1.008	.598

29	.965	.426	.756	.387	.849	.398	.849	.411	.853	.426	.853	.393	.853	.408
30	.964	.567	.754	.490	.853	.537	.853	.520	.851	.548	.851	.512	.848	.527
31	.928	.522	.867	.544	.898	.529	.898	.541	.897	.556	.897	.519	.894	.534
32	1.000	.583	1.000	.652	1.000	.622	1.000	.606	1.000	.614	1.000	.614	1.000	.614
33	1.257	.633	.944	.607	1.094	.619	1.094	.623	1.089	.620	1.089	.620	1.094	.623
34	1.155	.627	.815	.566	.976	.600	.976	.595	.972	.597	.972	.597	.972	.597
35	1.000	.647	1.000	.614	1.000	.634	1.000	.628	1.000	.631	1.000	.631	1.000	.631
36	.879	.581	.874	.511	.881	.570	.881	.528	.881	.549	.881	.550	.877	.547
37	.788	.550	.900	.519	.835	.560	.835	.504	.841	.534	.841	.535	.839	.533
38	.994	.602	1.032	.576	1.010	.595	1.010	.582	1.009	.587	1.009	.588	1.013	.590
39	.868	.595	1.082	.586	.954	.618	.954	.549	.970	.590	.970	.591	.965	.587
40	1.000	.619	1.000	.621	1.000	.644	1.000	.586	1.000	.620	1.000	.622	1.000	.619
41	.963	.593	.660	.458	.824	.557	.824	.509	.805	.529	.805	.530	.804	.527
42	.964	.563	.873	.561	.925	.573	.925	.550	.905	.557	.905	.558	.916	.562
43	.995	.590	.763	.536	.883	.568	.883	.560	.869	.564	.869	.565	.869	.562
44	.932	.554	.812	.568	.878	.557	.878	.565	.858	.556	.858	.558	.868	.562
45	.906	.571	.826	.565	.871	.581	.871	.553	.861	.567	.861	.569	.864	.568
46	1.000	.591	1.000	.519	1.000	.564	1.000	.553	1.000	.551	1.000	.563	1.000	.559
47	.912	.558	1.066	.551	.974	.556	.974	.550	.978	.547	.978	.559	.977	.554
48	.873	.528	1.195	.593	1.007	.553	1.007	.560	1.012	.551	1.012	.563	1.002	.553
49	.902	.524	1.051	.570	.960	.521	.960	.568	.956	.533	.956	.546	.965	.546
50	1.046	.628	1.206	.602	1.116	.640	1.116	.587	1.118	.625	1.118	.609	1.111	.616
51	.994	.606	1.094	.548	1.038	.610	1.038	.542	1.039	.586	1.039	.571	1.036	.580
1	-.018	1.195	-.007	1.056	.029	1.204	-.007	1.060	.027	1.215	-.001	1.046	.013	1.126
2	.010	.987	.011	.953	-.019	.985	.009	.950	-.018	1.012	.007	.922	-.006	.969
3	-.004	1.053	-.029	.994	.010	1.052	-.035	.996	-.010	1.069	-.014	.978	-.011	1.025
4	.197	.971	-.002	.950	-.004	.974	-.002	.955	-.002	1.003	-.002	.923	-.001	.964
5	.025	.885	.153	1.024	.160	.880	.233	1.026	.125	.903	.246	1.003	.187	.948
6	.006	.545	.017	.309	.007	.551	.012	.351	-.001	.562	.020	.376	.009	.446

7	-.017	1.016	.001	1.008	-.015	1.016	.001	1.009	-.019	1.010	.006	1.008	-.007	1.006
8	.003	.949	.016	1.359	.004	.945	.014	1.307	-.004	1.062	.023	1.099	.009	1.077
9	-.051	1.075	-.012	.959	-.047	1.075	-.015	.965	-.049	1.071	-.011	.974	-.030	1.023
10	.482	.274	.466	.300	.417	.372	.469	.294	.444	.344	.444	.325	.442	.336
11	.431	.279	.411	.363	.408	.410	.412	.344	.410	.390	.410	.371	.411	.379
12	.521	.311	.456	.325	.463	.271	.457	.323	.460	.284	.460	.298	.461	.298
13	.441	.349	.931	.352	.920	.306	.931	.314	.923	.304	.923	.318	.922	.306
14	.359	.326	.516	.303	.432	.309	.516	.303	.473	.299	.473	.313	.473	.307
15	.446	.307	.513	.270	.498	.318	.512	.306	.506	.304	.506	.317	.506	.312
16	.468	.348	.423	.319	.481	.337	.425	.306	.454	.322	.454	.324	.453	.323
17	.446	.317	.447	.322	.430	.310	.449	.319	.441	.309	.441	.311	.442	.315
18	.393	.352	.463	.288	.524	.323	.469	.314	.498	.318	.498	.320	.497	.316
19	.400	.383	.478	.314	.442	.329	.477	.302	.458	.310	.458	.312	.458	.316
20	.441	.354	.631	.210	.363	.310	.632	.259	.488	.279	.488	.281	.486	.278
21	.408	.362	.602	.385	.445	.415	.594	.344	.524	.385	.524	.387	.524	.383
22	.520	.302	.533	.343	.465	.382	.523	.302	.492	.349	.492	.350	.492	.345
23	.467	.338	.370	.332	.447	.354	.368	.338	.408	.345	.408	.346	.406	.348
24	.473	.419	.447	.269	.392	.313	.449	.254	.420	.285	.420	.286	.421	.284
25	.357	.393	.493	.261	.401	.325	.495	.279	.446	.302	.446	.302	.446	.299
26	.585	.401	.466	.376	.444	.402	.466	.395	.456	.398	.456	.399	.455	.398
27	.546	.339	.424	.321	.410	.360	.424	.353	.418	.357	.418	.357	.420	.357
28	.420	.273	.532	.368	.522	.384	.536	.388	.527	.385	.527	.385	.527	.388
29	.410	.321	.481	.425	.466	.386	.482	.368	.473	.377	.473	.377	.474	.377
30	.463	.181	.527	.296	.473	.280	.527	.292	.499	.309	.499	.270	.498	.286
31	.915	.351	.721	.240	.394	.288	.647	.270	.529	.301	.529	.262	.528	.278
32	.428	.339	.648	.150	.574	.158	.701	.169	.635	.181	.635	.155	.639	.166
33	.500	.341	.495	.370	.529	.348	.578	.371	.551	.386	.551	.342	.550	.358
34	.402	.319	.453	.389	.402	.357	.464	.374	.434	.391	.434	.347	.435	.364
35	.486	.275	.511	.381	.487	.365	.510	.359	.498	.387	.498	.343	.496	.364
36	.424	.547	.471	.461	.428	.364	.470	.346	.447	.322	.447	.396	.448	.361

37	.436	.367	.404	.346	.436	.310	.403	.270	.421	.261	.421	.327	.421	.289
38	.475	.394	.529	.234	.474	.474	.528	.357	.501	.351	.501	.426	.502	.390
39	.449	.263	.537	.284	.449	.295	.540	.242	.493	.280	.493	.264	.494	.272
40	.546	.449	.524	.305	.546	.415	.525	.350	.538	.391	.538	.372	.535	.378
41	.432	.460	.548	.313	.432	.425	.554	.356	.490	.399	.490	.379	.492	.391
42	.402	.380	.529	.325	.400	.400	.536	.297	.464	.361	.464	.343	.467	.353
43	.426	.361	.545	.327	.429	.383	.544	.298	.485	.353	.485	.334	.486	.342
44	.499	.384	.553	.338	.497	.368	.555	.356	.529	.372	.529	.354	.525	.366
45	.462	.308	.479	.235	.464	.332	.477	.225	.470	.296	.470	.272	.472	.283
46	.489	.385	.460	.238	.488	.391	.461	.240	.477	.321	.477	.296	.474	.308
47	.424	.357	.483	.113	.424	.326	.484	.154	.453	.242	.453	.221	.453	.234
48	.489	.417	.561	.337	.488	.387	.561	.372	.523	.379	.523	.382	.523	.380
49	.482	.308	.540	.402	.484	.337	.540	.366	.512	.346	.512	.349	.511	.349
50	.515	.378	.545	.368	.523	.375	.548	.368	.536	.370	.536	.372	.540	.368
51	.564	.334	.475	.382	.564	.341	.478	.373	.524	.353	.524	.356	.520	.355
103	.193	1.000	.294	1.000	.211		.269	1.000	.253	1.000	.233	1.000	.240	1.000

Unstd. = Unstandardized estimates; Std. = standardized estimates.

Invariance analysis of ***Sustainable Supply Chain Management Performance (SSCMP)***

Model (M)	CMIN (χ^2)	DF	P	NFI	NNFI	CFI	RMSEA
Unconstrained	524.017	332	0	0.915	0.962	0.967	0.038
$\Lambda_m = \Lambda_f$	537.817	348	0	0.913	0.964	0.967	0.037
$\Lambda_m = \Lambda_f$; $\Theta_m = \Theta_f$	599.090	392	0	0.903	0.965	0.964	0.036
Complete Invariance	607.958	396	0	0.902	0.965	0.964	0.036

Parameter estimates of each model in ***Sustainable Supply Chain Management Performance (SSCMP)***

Model	Unconstrained	Am=Ar	Am=Ar; Om=Or	Complete Invariance

Type	Arc		Con		Arc		Con		Arc		Con		Arc	Con
Parameters	Unstd.	Std.	Unstd.	Std.	Unstd.	Std.	Unstd.	Std.	Unstd.	Std.	Unstd.	Std.	Unstd.	Std.
1	1	0.887	1	0.97	1	0.886	1	0.965	1	0.903	1	0.931	1	0.916
2	0.749	0.984	0.973	0.937	0.83	0.985	0.86	0.939	0.842	0.989	0.842	0.936	0.853	0.963
3	0.875	0.978	0.909	0.986	0.906	0.976	0.853	0.993	0.889	0.981	0.889	0.983	0.892	0.98
4	0.907	1.022	1.149	0.995	1.022	1.021	0.954	0.995	1.011	1.03	1.011	0.993	1.009	1.012
5	1	0.734	1	0.567	1	0.721	1	0.592	1	0.665	1	0.653	1	0.658
6	0.85	0.638	1.013	0.538	0.899	0.649	0.899	0.512	0.908	0.592	0.908	0.58	0.91	0.586
7	0.796	0.627	0.918	0.506	0.834	0.635	0.834	0.49	0.844	0.574	0.844	0.563	0.848	0.57
8	1	0.503	1	0.563	1	0.532	1	0.532	1	0.519	1	0.54	1	0.534
9	1.136	0.596	0.984	0.554	1.057	0.595	1.057	0.555	1.064	0.565	1.064	0.586	1.057	0.576
10	1.271	0.652	1.094	0.617	1.185	0.653	1.185	0.621	1.191	0.627	1.191	0.648	1.181	0.637
11	1.244	0.631	0.848	0.462	1.062	0.594	1.062	0.52	1.059	0.543	1.059	0.564	1.047	0.552
12	1.106	0.588	1.023	0.636	1.066	0.602	1.066	0.623	1.062	0.596	1.062	0.617	1.058	0.609
13	1	0.592	1	0.486	1	0.594	1	0.479	1	0.54	1	0.54	1	0.541
14	1.003	0.546	0.886	0.432	0.957	0.531	0.957	0.452	0.955	0.495	0.955	0.494	0.951	0.493
15	1.169	0.635	0.996	0.464	1.114	0.618	1.114	0.501	1.104	0.56	1.104	0.559	1.103	0.56
16	1.129	0.655	1.019	0.496	1.097	0.646	1.097	0.518	1.086	0.581	1.086	0.581	1.085	0.582
17	0.933	0.604	1.181	0.574	1.009	0.637	1.009	0.499	1.03	0.581	1.03	0.58	1.027	0.58
18	1.036	0.623	1.028	0.529	1.029	0.622	1.029	0.521	1.032	0.578	1.032	0.578	1.032	0.579
19	1	0.577	1	0.586	1	0.613	1	0.53	1	0.572	1	0.587	1	0.577
20	1.049	0.598	0.756	0.477	0.926	0.584	0.926	0.504	0.914	0.539	0.914	0.553	0.917	0.545
21	1.133	0.655	0.689	0.458	0.944	0.617	0.944	0.528	0.927	0.564	0.927	0.578	0.926	0.568
22	1.201	0.665	0.963	0.562	1.098	0.665	1.098	0.561	1.089	0.61	1.089	0.624	1.092	0.616
23	0.971	0.575	0.901	0.554	0.947	0.602	0.947	0.521	0.945	0.561	0.945	0.575	0.949	0.568
24	0.999	0.597	0.806	0.482	0.917	0.599	0.917	0.482	0.912	0.536	0.912	0.55	0.917	0.544
1	0.087	1.045	0.013	0.991	0.083	1.042	0.017	0.99	0.013	0.991	0.04	0.986	0.05	1.024
2	0.006	0.956	0.027	0.971	0.006	0.952	0.022	0.987	0.027	0.971	0.026	0.966	0.015	0.961

3	0.011	0.968	0.005	0.878	0.012	0.97	0.002	0.881	0.005	0.878	0.007	0.876	0.008	0.928
4	-0.011	0.787	0.002	0.942	-0.013	0.785	0.002	0.931	0.002	0.942	0.004	0.867	-0.006	0.838
5	0.349	0.356	0.454	0.233	0.355	0.359	0.448	0.232	0.454	0.233	0.403	0.303	0.404	0.296
6	0.43	0.331	0.542	0.307	0.426	0.362	0.551	0.272	0.542	0.307	0.488	0.331	0.488	0.323
7	0.398	0.442	0.528	0.316	0.396	0.442	0.532	0.314	0.528	0.316	0.462	0.389	0.461	0.379
8	0.548	0.429	0.471	0.21	0.544	0.38	0.478	0.279	0.471	0.21	0.511	0.334	0.509	0.322
9	0.435	0.357	0.479	0.228	0.437	0.341	0.477	0.254	0.479	0.228	0.456	0.305	0.456	0.297
10	0.407	0.333	0.427	0.343	0.406	0.375	0.423	0.281	0.427	0.343	0.414	0.344	0.415	0.333
11	0.436	0.388	0.581	0.28	0.443	0.387	0.575	0.271	0.581	0.28	0.506	0.334	0.508	0.335
12	0.431	0.364	0.337	0.329	0.43	0.406	0.34	0.249	0.337	0.329	0.387	0.337	0.385	0.336
13	0.477	0.429	0.559	0.246	0.478	0.418	0.56	0.269	0.559	0.246	0.519	0.337	0.518	0.338
14	0.607	0.403	0.592	0.216	0.608	0.382	0.594	0.251	0.592	0.216	0.601	0.313	0.602	0.313
15	0.519	0.299	0.623	0.186	0.522	0.282	0.617	0.204	0.623	0.186	0.572	0.244	0.572	0.243
16	0.436	0.35	0.549	0.236	0.437	0.353	0.545	0.229	0.549	0.236	0.494	0.291	0.494	0.293
17	0.39	0.345	0.491	0.404	0.388	0.362	0.511	0.388	0.491	0.404	0.446	0.381	0.447	0.371
18	0.436	0.398	0.468	0.213	0.436	0.353	0.473	0.271	0.468	0.213	0.453	0.318	0.453	0.304
19	0.506	0.425	0.517	0.38	0.504	0.426	0.531	0.386	0.517	0.38	0.515	0.42	0.516	0.405
20	0.502	0.355	0.524	0.307	0.5	0.355	0.522	0.307	0.524	0.307	0.513	0.344	0.513	0.332
21	0.433	0.253	0.482	0.317	0.44	0.283	0.478	0.284	0.482	0.317	0.462	0.292	0.464	0.285
22	0.461	0.393	0.543	0.256	0.46	0.403	0.545	0.24	0.543	0.256	0.503	0.317	0.503	0.325
23	0.482	0.407	0.495	0.29	0.478	0.422	0.498	0.262	0.495	0.29	0.487	0.336	0.486	0.344
24	0.456	0.539	0.579	0.322	0.456	0.52	0.578	0.351	0.579	0.322	0.516	0.427	0.515	0.433
49	0.321	1	0.203	1	0.302	1	0.226		0.203	1	0.261	1	0.259	1

Unstd. = Unstandardized estimates; Std. = standardized estimates.

Appendix C- 1 (Ethical approval). Ethical approval certificate of Literature review

Certificate of Ethical Approval

Applicant:

Kexing Li

Project Title:

Improving sustainable performance in the construction sector by enhancing supply chain resilience: the dynamic capability perspective

This is to certify that the above named applicant has completed the Coventry University Ethical Approval process and their project has been confirmed and approved as Low Risk

Date of approval:

04 June 2020

Project Reference Number:

P107594

Appendix C- 2 (Ethical approval). Ethical approval certificate Data collection

Coventry University

Certificate of Ethical Approval

Applicant:	Kexing Li
Project Title:	Improving sustainable performance in the construction sector by enhancing supply chain resilience: the dynamic capability

This is to certify that the above named applicant has completed the Coventry University Ethical Approval process and their project has been confirmed and approved as Medium Risk

Date of approval:	07 May 2021
Project Reference Number:	P116539

Appendix D- 1 (Focus group documents). Informal Interview Agenda

English version

Inform Interview agenda
1. Could you introduce what is the normal construction enterprise working process? what activities are included? 2. what do you think about the construction supply chain activities? What kinds of SC activities you will consider? 3. What is the usual risk in your SC activities? What type of risk are you most worried about 4. What resilience practices have you done to mitigate these potential risks? If these risks occur, what is the usual treatment strategy? 5. What type of sustainability they care？(TBL) In your SC, what kinds of sustainable practices you will do? 6. In your supply chain, what are the risks of these sustainable practices? how do you deal with these risks？How do these risks affect your sustainable strategy? 7. Check the questionnaire.

Chinese version

非正式访谈议程
1. 您能介绍下普通建筑企业的工作流程吗？一般包括哪些活动？ 2. 您认为建筑行业的供应链活动是什么？ 哪些活动是你们会考虑的? 3. 在你们的供应链活动中，通常会有哪些风险？什么类型的风险是您最担心的？比如，供应商/工期的延误？ 4. 你们做了哪些弹性实践来缓解这些潜在风险？如果这些风险发生时，你们会如何处理，通常的策略是什么？ 5. 哪些类型的可持续实践你们会关心？（社会，经济，环境）在你们的供应链中，你们会做哪些可持续的实践？ 6. 在你们的在供应链中，可持续实践会有哪些风险？会如何处理他们？ 这些风险对你们实施可持续战略有什么影响？ 7. 询问对问卷设计的建议

Appendix D- 2 (Focus group documents). Focus Group Guide

English version
Part 1 Time
Part 2 Participators
Part 3 Progress
Part 4 Guiding and Question Design
Part 5 Focus Group Resilience

Part 1 Time

- Local time - 23/4/2021 from 15:00 PM to 16:00 PM (This time would be change, it will depend on participator)

Part 2 Participators

- This focus group will invite two kinds of participators by WeChat. One part is the construction researcher who I know by academic communication activities. Another part is construction managers who I know from relevant researchers.

- One part is construction researchers who belong to civil engineering college in Yangtze Normal University. Participants in this part are expected to be 4 people.

- Mid and senior managers from a construction company include a construction company and contractors. Participants in this part are expected to be 2 people.

Part 3 Progress

- This focus group will last 1 hour.
- 5 to10 mins for participators to read and check the ethic documents, Consent Form and Participant Information Sheet (these documents will be sent to the participants the day before the discussion).
- 5mins for me to use the language of their industry to explain what the supply chain of construction companies is.
- I will also briefly explain supply chain resilience and sustainable supply chain management before asking Q1 and Q2.
- 20 mins will be used to discuss Q1 supply chain resilience in the construction industry, and I look forward to 2 to 4 participators speaking.
- 25 mins will be used to discuss Q2 sustainable supply chains in the construction industry, and I look forward to 3 to 5 participators speaking.

Part 4 Guiding and Question Design

Guiding

What should they do?	**What should I look for?**	**Feedback**
Ask the individuals to look over the outline and check for clarity the words and of the message being conveyed in the outline.	Did they have trouble understanding any phrase or words?	
Ask the individuals to look over the question and check for clarity the words	Did they understand the questions?	

and of the message being conveyed in the outline.		
Ask the individuals to respond to the main questions.	Do their answers contain the type of information I am seeking? Are their answers off topic? Do the answers reflect misunderstanding of certain phrases or words?	
Ask them to look over the entire guide.	Did they identify anything I have forgotten and need to add?	

Question Design

What should they do? **(Q=question; FQ= Follow question)**	**What should I look for?**	**Feedback**
Q1 What resilience practices have you done to mitigate these potential risks in your supply chain?	• Identify the key and valued resilience practices and strategies	
=>FQ: 1) What motivation make you to do so 2) How to do so 3) how about the result (relate to the sustainable performance)?	• Identify potential dynamic capabilities • Identify improved performance • Identify how the resilience impact dynamic capabilities • Identify how & why the resilience impact sustainability performance	
Q2 What sustainable supply chain activities you will to do to keep your company have a sustainable development?	• Identify the key and valued sustainability practices and strategies	
=>FQ: 1) What motivation make you to do so 2) how about the result?	• Identify potential dynamic capabilities and resilience • Identify how the dynamic capabilities impact sustainability • Identify how the sustainable supply chain impact its performance.	

Part 5 Focus group Resilience

- If the interviewee wants the interview to stop, allow that to happen.
- Try to establish why this has happened.
- Offer to make adjustments. Offer to provide further information on the research. Offer apologies for any offence or upset that I may have unknowingly caused.
- If I feel it is necessary, explain to the interviewee that I will write to them apologizing for any upset or offence I might have unwittingly caused and outlining an account of what happened.
- If I do happen to lose one important interviewee, replace this interviewee with another through the pervious method.

Appendix D- 3 (Focus group documents). Schedule

Schedule

Time	Content (Q=question; FQ= Follow question)
Before one day	Send consent form, participant information form, schedule, introduction.
15:00 – 15:10	Read and check the consent form and participant information form.
15:10 - 15:30	Q1 What resilience practices have you done to mitigate these potential risks in your supply chain?
	FQ:1) What motivation make you do so ? 2) How to do so ? 3) how about the result?
15:30 – 16:00	Q2 What sustainable supply chain activities will you do to keep your company has sustainable development?
	=>FQ:1) What motivation make you do so 2) how about the result?
After two day	Send discussion notes

Introduction

It is a survey on improving the performance of sustainable supply chains in the construction industry. This discussion hopes to understand how a construction company handles risks in its supply chain, how to implement sustainable practices in its supply chain, and how much this series of exercises impact its performance. This research tries to find an effective method to improve our sustainable construction supply chain management by discussing these questions.

Because green environmental protection, social responsibility, and asset reuse are becoming more and more critical, if companies want to enter the international market, companies have to consider the above three aspects from the perspective of the supply chain. It is also because of stakeholders. If an accident occurs at any link in the company's supply chain, it may have an unpredictable impact on the company. Secondly, although the construction industry can significantly promote economic development, due to the instability of the construction industry, how to deal with the sustainability issues that it brings during operation has become the key. However, some similar investigations have appeared in the manufacturing industry. However, it is still relatively blank in the construction industry.

An essential contribution of this survey is that, under the concept of sustainable supply chain management, the integration of previous literature on different aspects of sustainability in the manufacturing industry and citing some sustainable practices in the construction industry. This research has set the comprehensive measurement factors. The main contribution of this discussion is to fill in the missing parts of the literature by communicating with actual companies and experts in sustainable research and then to judge the true value and accuracy of the measurement factors in the constructor sector.

Therefore, this event will discuss two fundamental questions about construction companies. Q1 What resilience practices have you done to mitigate these potential risks in your supply chain? And Q2, what sustainable supply chain activities will you do to keep your company have sustainable development?

Also, I cited dynamic capabilities as the theoretical support for this research. Dynamic capabilities are a kind of ability for companies to maintain sustainable competitiveness in an uncertain environment. I will introduce the theory of dynamic capabilities into supply chain management. I hope to find the potential connections between supply chain dynamic capabilities, supply chain resilience, and sustainable supply management by the empirical survey. After the two fundamental questions, there will be some follow-up questions, such as 1) What is the motivation for doing this? 2) How to do it? 3) What is the result?

Appendix D- 4 (Focus group documents). Glossary

Supply chain: The supply chain is mainly used in the manufacturing industry and originated from the automobile manufacturing industry. Its purpose is to improve production efficiency and reduce production costs. In manufacturing, it includes a series of activities from raw materials to customers**.**

Construction supply chain: General contractor as the core enterprise, the activities from project definition to construction, completion to delivery, maintenance, demolition, and the construction process and related organizations network.

Supply chain dynamic capabilities: the ability of an enterprise to timely perceive opportunities and crises in its supply chain operations and timely respond to them by upstream and downstream adjustments.

Supply chain resilience: An enterprise considers risk activities from the perspective of the entire supply chain. It can maintain a series of activities on how to prevent risks before they occur, effectively deal with them when they occur, and how to resume operations after they occur.

Sustainability of the supply chain: When companies conduct supply chain activities, they will also consider the economic sustainability and environmental and social issues involved in these activities.

Measurement factor: There is two central part. One part is the summary of the daily activities of the construction company. These activities are divided into the company's dynamic capabilities, flexibility, and sustainability in the supply chain; the other part is based on sustainability. It is the result of these activities.

Chinese version (combine: Focus Group Guide, Schedule, Glossary)

北京时间	焦点小组进程表
10/06/2021（周四）	发送同意书，参与者信息表，进程表给参加者
11/06/2021（周五）	
20:00 - 20:10:	阅读和检查同意书和参与者信息表
20:10 - 20:30	Q1:采用哪些弹性措施来减轻供应链中的潜在风险？
	1)这样做的动机是什么？
	2)如何做？
	3)结果如何？
20:30 - 21:00	Q2:您将进行哪些可持续的供应链活动，以获取公司的可持续发展？
	1）这样做的动机是什么？
	2）结果如何？
14/06/2021（周一）	发送讨论笔记给所有参加者

Coventry University

焦点小组的相关信息

李柯兴

博士研究员

考文垂大学

Coventry CV1 5FB

电子邮箱: Lik76@uni.coventry.ac.uk

关于这项研究

这是一项关于提高建筑业的可持续供应链绩效的调查。这次调查希望通过了解建筑企业是如何处理它供应链上的风险，如何在它的供应链上实施可持续的实践，以及这一系列实践是对其绩效有多大影响，来了解我们可以通过哪些有效的经验实践来完善我们的可持续的建筑供应链管理。

为什么要做这研究 ？

因为绿色环保，社会责任，以及资产的再利用变得越来越重要，如果企业要面向国际市场，企业就不得不从供应链的角度考虑这三个方面。这也是因为利益相关者的原因，如果企业供应链上任意一个环节出现了意外，都有的可能对企业带来不可预测的影响。其次，尽管建筑业能极大的带动经济的发展，但由于建筑业的不稳定性，如何处理它在运营过程中带来的可持续问题成为了关键，尽管一些类似的调查已经出现在制造业中，但在建筑业还是相当的空白。

为什么要进行这次讨论 ？

这项调查的一个重要贡献是，在可持续供应链管理的概念下，通过整合之前对制造业在可持续不同方面的的文献和引用一些建筑业的可持续实践的结论，总结出一套完善的测量因子。这此讨论的主要贡献就是通过与真实的企业和可持续建筑的专家沟通来补缺文献缺少的部分，或被之前学者忽视掉的测量因子，其次判断测量因子的实际价值和其准确性。

我们将讨论什么 ？

因此，这次活动将围绕建筑企业讨论两个基本问题：Q1 哪些弹性措施来减轻供应链中的潜在风险？以及 Q2 哪些可持续的供应链活动，以保持公司的可持续发展？

通过这次讨论，你可以知道最前沿的可持续实践和弹性实践，也可以知道中国建筑业目前的在可持续的弹性上的做法。希望我们讨论的这些实践能给您在工作上带来一些新的思考和启发，也希望所以参加者都能从这次讨论中获得一些收获。

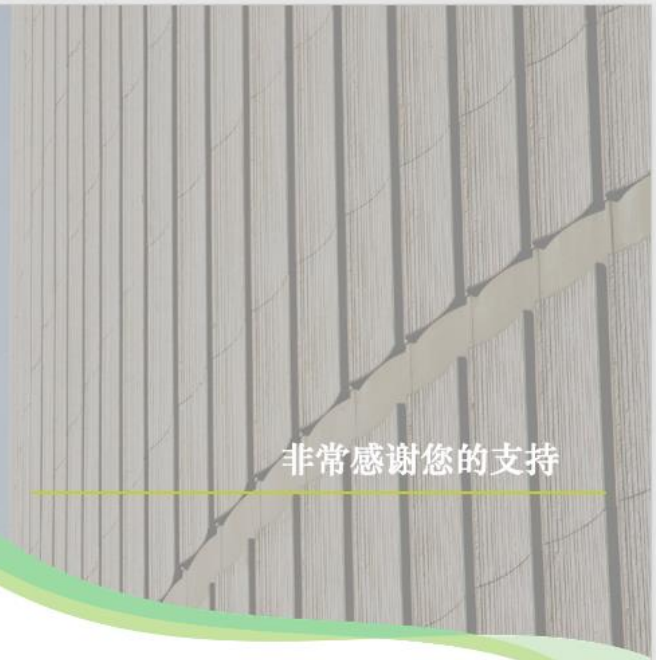

非常感谢您的支持

名词解释

供应链

供应链主要运用在制造业，发源于汽车制造业，它的目的是提高生产效率，降低生产成本。在制造业中它包括产品从原材料到客户的一系列活动。

建筑供应链

以总承包商为核心企业，从项目定义开始到施工，竣工直至交付使用，维护，拆迁的全过程，以及这些建设过程的所有活动和所涉及的有关组织机构组成的建设网络。

供应链的动态能力

企业能及时感知它在供应链运营过程中的机会和危机，并能通过对上下游的及时调整作出响应的能力。

供应链的弹性

企业从整个供应链的角度来考虑风险的活动，它可以保持在风险发生前如何预防，发生时的有效处理，以及发生后如何恢复运营的一系列活动。

供应链的可持续性

企业在进行供应链活动时，会考虑同时考虑这些活动涉及到的经济的可持续性以环境问题和社会问题。

测量因子

主要分为两部分，一部分是总结的建筑企业的日常活动，这些活动分为企业在供应链上的动态能力，弹性和持续性；另一部在可持续的概念下，总结了是这些活动带来的结果。

Appendix D- 5 (Focus group documents). Participant information statement

PARTICIPANT INFORMATION STATEMENT

The aim of this study is to understand how dynamic capabilities affect the relationship between (intermediary) supply chain resilience practice and sustainable supply chain management practice by questionnaire surverys, and then find the useful practice that can improve sustainable supply chain management performance in Chinese construction sector.

The study is being conducted by Kexing Li, Ph.D. researcher at Coventry University. You have been selected to take part in this questionnaire survey because you have convincing working experience in managing construction sector supply chain, or construction sustainable supply chain management, or construction supply chain resilience. Your participation in the survey is entirely voluntary, and you can opt out at any stage by closing and exiting the browser. If you are happy to take part, please answer the following questions relating to sustainable supply chain management. Your answers will help us to better understand how enterprises to build and improve their supply chain resilience and sustainable supply chain. The survey should take approximately 25 minutes to complete. Your answers will be treated confidentially and the information you provide will be kept anonymous in any research outputs/publications. Your data will be processed in accordance with the General Data Protection Regulation 2016 (GDPR) and the Data Protection Act 2018. Your data will only be viewed by the researcher/research team. All the data and files will be store on Coventry University OneDrive. All paper records will be stored in a locked filing cabinet Jaguar building in Coventry University. The lead researcher will take responsibility for data destruction and all collected data will be destroyed on or before 01/20/2023.

Please note countries outside of the European Economic Area may not offer the same level of data privacy protection as in the UK.

You are free to withdraw your questionnaire responses from the project data set at any time until the data are destroyed on 09/30/2023. You should note that your data may be used in the production of formal research outputs (e.g. journal articles, conference papers, theses and reports) prior to this date and so you are advised to contact the university at the earliest opportunity should you wish to withdraw from the study. To withdraw, please contact the lead researcher (contact details are provided below). Please also contact the Faculty Research Support Office (email researchproservices.fbl@coventry.ac.uk; telephone +44(0)2477658461) so that your request can be dealt with promptly in the event of the lead researcher's absence. You do not need to give a reason. A decision to withdraw, or not to take part, will not affect you in any way.

Coventry University is a Data Controller for the information you provide. You have the right to access information held about you. Your right of access can be exercised in accordance with the General Data Protection Regulation and the Data Protection Act 2018. You also have other rights including rights of correction, erasure, objection, and data portability. For more details, including the right to lodge a complaint with the Information Commissioner's Office, please visit www.ico.org.uk Questions, comments and requests about your personal data can also be sent to the University Data Protection Officer - enquiry.ipu@coventry.ac.uk

The project has been reviewed and approved through the formal Research Ethics procedure at Coventry University. For further information, or if you have any queries, please contact the lead researcher Kexing Li(Lik76@uni.coventry.ac.uk). If you have any concerns that cannot be resolved through the lead researcher, please contact the supervisory of lead researcher Mahdi Bashiri (ad2594@coventryac.uk). Thank you for taking the time to participate in this survey. Your help is very much appreciated.

1	**I have read and understood the above information.**	**Yes**	**No**

2	**I agree to take part in this questionnaire survey**	**Yes**	**No**
3	**I confirm that I am aged 18 or over.**	**Yes**	**No**

Chinese Version

参与者信息声明

这项研究的目的是通过收集问卷，了解动态能力如何影响（调解）供应链弹性实践与可持续供应链实践之间的关系，然后发现能提高中国可持续建筑供应链绩效的实践。这项研究由考文垂大学博士研究员李柯兴主持着这项研究。 你被选中参加这次问卷调查，因为你因为您在建筑供应链，或可持续的建筑供应链管理，或建筑的供应链弹性方面具有令人信服的经验。 您参与调查完全是自愿的，您可以通过关闭和退出浏览器在任何阶段选择退出。 如果您乐意参加，请回答以下与可持续供应链管理有关的问题。 您的答案将帮助我们将帮助李柯兴和考文垂大学更好地了解企业如何建立和提高其供应链弹性和可持续供应链。调查大约需要 25 分钟才能完成。 您的答案将保密处理，您提供的信息将在任何研究成果/出版物中保持匿名。您的数据将按照 2016 年一般数据保护条例（GDPR） 和 2018 年数据保护法案进行处理。 您的数据将是安全的，所有数据和文件将存储在 Coventry Univeristy Onedrive 中。所有纸质记录将存储在考文垂大学 Jaguar 大楼的上锁文件柜中。并且将只由研究人员/研究团队查看。首席研究员将承担数据破坏的责任，所有收集的数据将在 09/30/2023 或之前销毁。

请注意，欧洲经济区以外的国家不得提供与英国相同的数据隐私保护级别。

您可以随时从项目数据集中撤回调查问卷答复，直到数据在 09/30/2023 被销毁为止。您应该注意，您的数据可用于在本日期之前生成正式的研究成果（如期刊文章、会议论文、论文和报告），因此，如果您希望退出研究，建议您尽早与大学联系。 要退出，请联系首席研究员李柯兴(Lik76@uni.coventry.ac.uk)。也请联系学院研究支持办公室（电子邮件 researchproservices.fbl@coventry.ac.uk： 电话 +44 （0）2477658461），以便在首席研究员缺席时及时处理您的请求。 你不需要给出一个理由。退出或不参加的决定不会对您产生任何影响。

考文垂大学是您提供的信息的数据控制器。 您有权访问有关您的信息。您的访问权可根据《一般数据保护条例》和《2018年数据保护法》行使。您还有其他权利，包括更正权、擦除权、异议权和数据可移植性权。 欲了解更多详情，包括有权向信息专员办公室投诉，请访问 www.ico.org.uk 有关您的个人数据的问题、评论和请求，也可以发送给大学数据保护官员 - enquiry.ipu@coventry.ac.uk

该项目已通过考文垂大学正式的研究伦理程序得到审查和批准。 如欲了解更多信息，或者如果您有任何疑问，请联系首席研究员李柯兴(Lik76@uni.coventry.ac.uk)。 如果您有任何问题无法通过首席研究员解决，请联系研究员的主管主管 Mahdi Bashiri（ad2594@coventryac.uk）。 感谢您抽空参与此调查。非常感谢您的帮助。

1	**我阅读并理解上述信息**	**是的**	**不**
2	**我同意参加此问卷调查**	**是的**	**不**
3	**我确认我已年满 18 岁**	**是的**	**不**

Appendix E- 1 (Questionnaire Documents). Participant information sheet

English version

Improving sustainable performance in the Chinese construction sector by enhancing supply chain resilience: the dynamic capability perspective

PARTICIPANT INFORMATION SHEET

You are being invited to take part in research on supply chain resilience, dynamic capabilities, sustainable supply chain management and sustainable supply chain performance. Kexing Li, Ph.D. researcher at Coventry University is leading this research. Before you decide to take part, it is important you understand why the research is being conducted and what it will involve. Please take time to read the following information carefully.

What is the purpose of the study?
The purpose of this research is to 1) improve the questionnaire design through focus groups, then 2) through questionnaire surveys, to understand how dynamic capabilities affect the relationship between (intermediary) supply chain resilience practice and sustainable supply chain management practice, and then 3) find the useful practice that can improve sustainable supply chain management performance in Chinese construction sector.

Why have I been chosen to take part?
You are invited to participate in this study because you have convincing working experience in managing construction sector supply chain, or construction sustainable supply chain management, or construction supply chain resilience.

What are the benefits of taking part?
By sharing your experiences with us, you will be helping kexing LI and Coventry University to better understand how enterprises to build and improve their supply chain resilience and sustainable supply chain.

Are there any risks associated with taking part?
This study has been reviewed and approved through Coventry University's formal research ethics procedure. There are no significant risks associated with participation.

Do I have to take part?
No – it is entirely up to you. If you do decide to take part, please keep this Information Sheet and complete the Informed Consent Form to show that you understand your rights in relation to the research, and that you are happy to participate. Please note down your participant number (which is on the Consent Form) and provide this to the lead researcher if you seek to withdraw from the study at a later date. You are free to withdraw your information from the project data set at any time until the data are destroyed on 09/30/2023 until the data are fully anonymised in our records on 09/30/2023. You should note that your data may be used in the production of formal research outputs (e.g. journal articles, conference papers, theses and reports) prior to this date and so you are advised to contact the university at the earliest opportunity should you wish to withdraw from the study. To withdraw, please contact the lead researcher (contact details are provided below). Please also contact the Faculty Research Support Office (email researchproservices.fbl@coventry.ac.uk; telephone +44(0)2477658461) so that your request can be dealt with promptly in the event of the lead researcher's absence. You do not need to give a reason. A decision to withdraw, or not to take part, will not affect you in any way.

What will happen if I decide to take part?

You will be asked about information related to resilience and sustainability of construction companies (such as whether the company provides special training and education for employees). The focus group will take place in a safe environment at a time that is convenient to you (Online). Ideally, we would like to audio record your responses (and will require your consent for this), so the location should be in a quiet area. The focus group should take around 60 mins to complete.

Data Protection and Confidentiality

Your data will be processed in accordance with the General Data Protection Regulation 2016 (GDPR) and the Data Protection Act 2018. All information collected about you will be kept strictly confidential. Unless they are fully anonymised in our records, your data will be referred to by a unique participant number rather than by name. If you consent to being audio recorded, all recordings will be destroyed once they have been transcribed. Your data will only be viewed by the researcher/research team. All the data and files will be store on Coventry University OneDrive. All paper records will be stored in a locked filing cabinet Jaguar building in Coventry University. consent information will be kept separately from your responses in order to minimise risk in the event of a data breach. The lead researcher will take responsibility for data destruction and all collected data will be destroyed on or before 09/30/2023.

Data Protection Rights

Coventry University is a Data Controller for the information you provide. Data Protection legislation gives you rights in respect to your personal data. Your rights can be exercised in accordance with the General Data Protection Regulation and the Data Protection Act 2018 by submitting a request to DSAR@coventry.ac.uk . For more details on how to exercise your rights please see our website < https://www.coventry.ac.uk/the-university/gdpr-and-data-protection/ >. Further information on Data Protection Legislation can be found on the Information Commissioner's Office website at www.ico.org.uk.

What will happen with the results of this study?

The results of this study may be summarised in published articles, reports and presentations. Quotes or key findings will always be made anonymous in any formal outputs unless we have your prior and explicit written permission to attribute them to you by name.

Making a Complaint

If you are unhappy with any aspect of this research, please first contact the lead researcher, Kexing Li(Lik76@uni.coventry.ac.uk). If you still have concerns and wish to make a formal complaint, please write to my supervisor Mahdi Bashiri (ad2594@coventryac.uk):

Kexing LI
Ph.D. researcher
Coventry University
Coventry CV1 5FB
Email: Lik76@uni.coventry.ac.uk

In your letter please provide information about the research project, specify the name of the researcher and detail the nature of your complaint.

Chinese Version

通过增强供应链弹性提高中国建筑行业的可持续发展：动态能力视角

参与者信息表

您受邀参与供应链弹性，动态能力，可持续供应链管理和可持续供应链绩效的研究。考文垂大学博士研究员李柯兴主持着这项研究。在你决定参加之前，重要的是需要你了解为什么进行这项研究，以及它将涉及什么，请花些时间仔细阅读以下信息。

这项研究的目的是什么？

本研究的目的是了解 1）通过焦点小组，完善问卷设计，然后 2） 通过收集问卷，了解动态能力如何影响（调解）供应链弹性实践与可持续供应链实践之间的关系，最后 3） 发现能提高中国可持续建筑供应链绩效的实践

为什么我被选中参加？

邀请您参加此研究，因为您在建筑供应链，或可持续的建筑供应链管理，或建筑的供应链弹性方面具有令人信服的经验。

参加活动的好处是什么？

通过与我们分享您的经验，您将帮助李柯兴和考文垂大学更好地了解企业如何建立和提高其供应链弹性和可持续供应链。

参与是否有任何风险？

这项研究已经通过考文垂大学的正式研究伦理程序的审查和批准，这里没有与参与相关的重大风险。

我必须参加吗？

不，这完全取决于你。如果您决定参加，请保留此信息表并填写知情同意表，以表明您了解您与研究相关的权利，并且您很乐意参与。请记下您的参与者编号（在同意表格上），如果您寻求在以后退出研究，请将该号码提供给首席研究员。您可以随时随时从项目数据集中提取信息，直到数据在 09/30/2023 被销毁为止，直到数据在 09/30/2023 的记录中完全匿名为止。您应该注意，您的数据可能会用于制作正式的研究成果（如期刊文章、会议论文、论文和报告），因此，如果您希望退出研究，建议尽早与大学联系。 要退出，请联系首席研究员（详情如下）。 也请联系学院研究支持办公室（researchproservices.fbl@coventry.ac.uk; mailto:researchproservices.fbl@coventry.ac.uk 电话 +44（0）2477658461，以便您的请求在首席研究员不在时得到及时处理。 你不需要给出理由。退出或不参加的决定不会对您产生任何影响。

如果我决定参加，会发生什么？

您将被问到一些建筑企业与弹性和可持续相关信息（如公司是否为员工提供特殊的培训和教育）的问题。焦点小组将在您方便的时候在安全的环境中进行（线上）。理想情况下，我们希望音频记录您的回复（并需要您的同意），因此位置应位于安静区域。焦点小组需要大约 60 分钟才能完成。

数据保护和保密性

您的数据将按照 2016 年一般数据保护条例 （GDPR） 和 2018 年数据保护法进行处理。 我收集的关于你的所有信息将严格保密。除非它们在我们的记录中完全匿名，否则您的数据将用唯一的参与者编号而不是名称引用。如果您同意录音，所有录音将被转录后将被销毁。您的数据将只由研究人员/研究团队查看。所有数据和文件将存储在 Coventry University Onedrive 中。所有纸质记录将存储在考文垂大学 Jaguar 大楼的上锁文件柜中。您的同意信息将与您的回复分开保存，以最大程度地减少发生数据泄露时的风险。首席研究员将承担数据破坏的责任，所有收集的数据将在 09/30/2023 或之前销毁。

数据保护权限

考文垂大学是您提供信息的数据控制者，数据保护法规赋予您有关个人数据的权利。您可以通过向 DSAR@coventry.ac.uk 提交请求，根据《通用数据保护条例》和《 2018 年数据保护法》来行使您的权利。有关如何行使权利的更多详细信息，请访问我们的网站<https://www.coventry.ac.uk/the-

university/gdpr-and-data-protection/>。 有关数据保护立法的更多信息，请访问信息专员办公室的网站，网址为 www.ico.org.uk。

这项研究的结果会怎么样?

本研究的结果可总结在已发表的文章、报告和演示文稿中。除非我们事先获得明确书面许可，可以按姓名将它们归您所有，否则任何正式输出中的报价或关键发现都将是匿名的。

进行投诉

如果您对这项研究的任何方面不满意，请首先联系首席研究员 李柯兴(Lik76@uni.coventry.ac.uk)。如果您仍有疑虑，希望提出正式投诉，请联系我的主管 Mahdi Bashiri（ad2594@coventryac.uk）

李柯兴
博士研究员
考文垂大学
考文垂 CV1 5FB
电子邮件： Lik76@uni.coventry.ac.uk
联系电话：+86 18523673587（中国）/ +44 07802686192 （英国）

请在信中提供有关研究项目的信息，注明研究人员的姓名，并详细说明您的投诉性质。

Appendix E- 2 (Questionnaire Documents). Information Consent Form

English version

Participant No:

INFORMED CONSENT FORM:
Improving sustainable performance in the Chinese construction sector by enhancing supply chain resilience: the dynamic capability perspective

You are invited to take part in this research study for the purpose of collecting data on supply chain resilience, dynamic capabilities, sustainable supply chain management and sustainable supply chain performance.

Before you decide to take part, you must **read the accompanying Participant Information Sheet.**

Please do not hesitate to ask questions if anything is unclear or if you would like more information about any aspect of this research. It is important that you feel able to take the necessary time to decide whether or not you wish to take part.

If you are happy to participate, please confirm your consent by circling YES against each of the below statements and then signing and dating the form as participant.

1	**I confirm that I have read and understood the Participant Information Sheet for the above study and have had the opportunity to ask questions**	**YES**	**NO**
2	**I understand my participation is voluntary and that I am free to withdraw my data, without giving a reason, by contacting the lead researcher and the Research Support Office at any time until the date specified in the Participant Information Sheet**	**YES**	**NO**
3	**I have noted down my participant number (top left of this Consent Form) which may be required by the lead researcher if I wish to withdraw from the study**	**YES**	**NO**
4	**I understand that all the information I provide will be held securely and treated confidentially**	**YES**	**NO**
5	**I am happy for the information I provide to be used in academic papers and other formal research outputs**	**YES**	**NO**
6	**I am happy for the focus group to be audio recorded**	**YES**	**NO**
7	**I agree to take part in the above study**	**YES**	**NO**

Participant's Name	**Date**	**Signature**
Researcher	**Date**	**Signature**

Chinese version

参与者编号：006

知情同意书：
通过增强供应链弹性提高中国建筑行业的可持续发展：动态能力视角

邀请您参加本研究，以收集有关供应链弹性、动态能力、可持续供应链管理和可持续供应链绩效的数据。

在你决定参加之前，你必须**阅读随附的参与者信息表。**

如果有什么不清楚的，或者如果您想了解更多有关这项研究的任何方面的信息，请不要犹豫提出问题。

如果您愿意参加，请在以下每个声明中划圈"是的"，然后在参加者的签名和日期上注明日期，以确认同意。

1	**我确认我已经阅读并理解了参与者信息表和以上的研究，并有机会提出问题**	**是的**	**不**
2	**我知道我的参与是自愿的，我可以自由撤回我的数据，而无需给出任何理由，随时联系首席研究员和研究支持办公室，直到参与者信息表中指定的日期**	**是的**	**不**
3	**我已经注意到我的参与者编号（本同意书的左上角），如果我想退出研究，首席研究员可能需要该号码。**	**是的**	**不**
4	**我理解我提供 的所有信息 都将安全 保存并 保密处理**	**是的**	**不**
5	**我很高兴我提供的信息用于学术论文和其他正式的研究成果**	**是的**	**不**
6	**我很高兴焦点小组被录音**	**是的**	**不**
7	**我同意参加上述研究**	**是的**	**不**

参与者姓名	**日期**	**签名**
研究员	**日期**	**签名**

Appendix E- 3 (Questionnaire Documents). Questionnaire

English version

Please indicate the extent to which you perceive that your company is implementing each of the following:
(1) Not at all true, (2) Scarcely true, (3) Somewhat true, (4) Considerably true, (5) Absolutely true

Part 1 Dynamic capabilities
Supply chain sense
(Teece, 2007); (Pavlou & Sawy, 2011)**;** (Li & Liu, 2014)**;** (Kurzhals, 2015)**;** (Kırcı & Seifert, 2015); (Lee & Rha, 2016)
SC Sen1 We will regularly review the potential impact of market and project environmental on the supply chain
SC Sen2 We regularly evaluate the operating conditions of our suppliers to ensure that they meet the requirements of the project
SC Sen3 We regularly exchange valuable knowledge documents with our supply chain partners
SC Sen4 We have an effective process to continuously explore new suppliers and complementors who can cooperate and innovate (eg. Innovation-suppliers that can develop clean materials, complementors-property management that emphasizes environmental governance)
SC Sen5 we have appropriate processes to identify and respond to market or industry trends (including competitors' activities)

Supply chain Seizing
(Teece, 2007); (Pavlou & Sawy, 2011); (Li & Liu, 2014); (Kurzhals, 2015); (Kırcı & Seifert, 2015); (Lee & Rha, 2016)
SC Sei1 We have effective routines (organizational forms and business models adjusted in time) to identify valuable new information and knowledge and import them into the supply chain
SC Sei2 We can successfully establish and maintain upstream and downstream relationships with cooperative innovation
SC Sei3 We have effective routines to guide companies in the direction of resource investment and technology research and development in the supply chain

Supply chain Reconfiguration
(Teece, 2007); (Pavlou & Sawy, 2011); (Li & Liu, 2014); (Kurzhals, 2015); (Kırcı & Seifert, 2015); (Lee & Rha, 2016)
SC Rec1 Our partners have the right to make changes to the product directly under the condition of meeting normal needs
SC Rec2 We can effectively integrate and combine existing resources into novel combinations in SC to better match new market needs or temporary engineering needs
SC Rec3 We have a mechanism to eliminate suppliers that do not meet the corporate development goals, and we also have a mechanism to develop new suppliers that meet the corporate plan.
SC Rec4 We often interact with partners to acquire new knowledge related to engineering development, process innovation or logistics and the latest raw materials.

Part 2 Supply chain resilience
Collaboration (CC)
(Christopher & Peck, 2004); (Sheffi & Rice, 2005)**;** (Blackhurst, et al., 2011)**;** (Ambulkar, et al., 2015)**;** (Gölgeci & Ponomarov, 2015)**;** (Chowdhurya & Quaddusb, 2017)**;** (Adobor, et al., 2018)**;** (Lohmer, et al., 2020)
CC1 We have regular communication with all partners.
CC2 Our leadership will analyse trends and new issues after the completion of the new project.
CC3 We have detailed instructions to guide the activities of general contractors, sub-contractors, direct suppliers and indirect suppliers.

(re)Engineering (RE)
(Christopher & Peck, 2004); (Sheffi & Rice, 2005)**;** (Ambulkar, et al., 2015)**;** (Gölgeci & Ponomarov, 2015) (Chowdhurya & Quaddusb, 2017)**;** (Altay, et al., 2018; (Lohmer, et al., 2020)
RE1 We value the risk awareness of suppliers (usually take the company's own risk system as a reference)
RE2 Our company's supply chain is fully prepared to deal with the financial consequences of supply chain disruption
RE3 We will strategically allocate additional capacity and/or inventory
RE4 We have a high degree of tacit understanding and long-term cooperation with stakeholders in the supply chain

Culture (CU)

(Christopher & Peck, 2004); (Sheffi & Rice, 2005)**;** (Blackhurst, et al., 2011)**;** (Ambulkar, et al., 2015)**;** (Gölgeci & Ponomarov, 2015)**;** (Chowdhurya & Quaddusb, 2017)**;** (Lohmer, et al., 2020)

CU1 We have a department to manage the hidden meaning of supply chain risks and disruptions.
CU2 We value any degree of supply chain disruption that can show us what can be improved, and we will learn and think about how to avoid similar supply chain disruptions.
CU3 We have a professional corporate culture that successfully inspires stakeholders to be passionate about the company's mission.
CU4 We know every detail of the engineering contract very well.
CU5 We will regularly check the rationality of project design and construction.
CU6 We regularly assess the impact of market and policy changes on projects and companies

Agility (AG)

(Christopher & Peck, 2004); (Sheffi & Rice, 2005)**;** (Blackhurst, et al., 2011)**;** (Chowdhurya & Quaddusb, 2017)**;** (Adobor, et al., 2018)**;** (Altay, et al., 2018; (Lohmer, et al., 2020)

AG1 When needed, we can adjust the scope of supply chain operations to implement decision-making (our suppliers, logistics, and employees are usually able to meet multiple needs)
AG2 Our company's supply chain is able to adequately cope with unexpected interruptions by quickly restoring its product flow
AG3 We attach importance to communication with customers, and regularly review customer feedback to judge the value of decision-making.
AG4 On the premise of safety, we simplify the work process and reduce the activities that cannot generate value in the construction process (eg. Directly deal with buyers and suppliers to reduce the number of layers in SC.)

Part 3 Sustainable supply chain management

Sustainable Product Design (SPD) or Eco-design

(Zhu & Sarkis, 2004)**;** (Esfahbodi, et al., 2016)**;** (Esfahbodi, et al., 2017) (Zhanga, et al., 2018)

SPD1 Under the premise of quality assurance, we design our project for reduced consumption of material/energy
SPD2 We design our project with reusing, recycling and disposal materials (grammar)
SPD3 We design our project to avoid or reduce use of hazardous materials
SPD4 We do not consider the biodegradability of the materials used in our project
SPD5 We consider sustainable alternatives to standard materials during design
SPD6 We consider the sustainable impact on the surrounding environment during the construction period

Environmental Procurement (EP)

(Zhu & Sarkis, 2004)**;** (Zhu, et al., 2008)**;** (Mariadoss, et al., 2016)**;** (Esfahbodi, et al., 2016)**;** (Esfahbodi, et al., 2017) (Zhanga, et al., 2018)

EP1 Our major suppliers have ISO 14000 certification
EP2 We have close cooperation with our suppliers regarding the environmental objectives
EP3 We regularly conduct environmental audit for suppliers' internal management
EP4 We design specification to suppliers that include environmental requirements for purchased item.

Environmental Customer Collaboration (ECC)

(Zhu, et al., 2008)**;** (Zhu, et al., 2013)**;** (Esfahbodi, et al., 2016)**;** (Esfahbodi, et al., 2017)**;** (Zhanga, et al., 2018)

ECC1 We cooperate with customers for eco design and cleaner production
ECC2 We require supplier for environmentally-friendly packaging
ECC3 We cooperate with supplier for reverse logistics relationships

Internal Green Management (IGM)

(Zhu & Sarkis, 2004)**;** (Zhu, et al., 2008)**;** (Wu, et al., 2015) (Mariadoss, et al., 2016)**;** (Esfahbodi, et al., 2016)**;** (Esfahbodi, et al., 2017)**;** (Das, 2017)**;** (Zhanga, et al., 2018)**;**

IGM1 Our senior and middle-level manager committed to applying green supply chain management practices from senior managers
IGM2 We will determine the environmental sustainability of the expected project life cycle
IGM3 We have Cross-functional cooperation to achieve environmental improvement
IGM4 We have Special training for workers on environmental issues
IGM5 we have ISO 14001 certification
IGM6 We assess sustainability issues that may affect project completion
IGM7 Our internal performance evaluation system incorporates environmental factors
IGM8 We aim to eradicate corruption in all its forms

Investment Recovery (IR)

(Zhu & Sarkis, 2004)**;** (Esfahbodi, et al., 2016)**;** (Esfahbodi, et al., 2017) (Zhanga, et al., 2018)

IR1 We aim to sale of excess inventories/materials
IR2 We aim to sale of scrap and used materials
IR3 We aim to sale of excess capital equipment

Diversity Management (DM)

(Wu, et al., 2015)**;** (Zhanga, et al., 2018)

DM1 All business enterprise suppliers have equal opportunity to become our partners (i.e., no difference regarding gender, nationality)
DM2 All workers have equal opportunity of employment with us (i.e., no difference regarding gender, nationality)
DM3 All workers have equal treatment and opportunity for promotion

Community Development and Involvement(CDI)

(Wu, et al., 2015)**;** (Mariadoss, et al., 2016)**;** (Esfahbodi, et al., 2016)**;** (Esfahbodi, et al., 2017)**;** (Das, 2017)**;** (Zhanga, et al., 2018)

CDI1 We strive to improve local employment opportunities for the local community
CDI2 We continuously promote community education, public health and cultural development (e.g. employees volunteer for local charities)
CDI3 We acquainted with local environmental laws and policies
CDI4 We are involved in local community development plans (partnerships with government agencies and industry group)
CDI5 Use of child labour and forced labour is not allowed in our organization.

Safety Management (SM)

(Wu, et al., 2015)**;** (Zhu, et al., 2016)**;** (Zhu, et al., 2016)**;** (Das, 2017)**;** (Zhanga, et al., 2018)

SM1 We will conduct regular safety inspections on the warehouse, especially after special weather
SM2 We will regularly conduct safety inspections and maintenance on our projects
SM3 We guarantee the health and safety of our staff at working environment (E.G. “zero harm” safety management)
SM4 We regularly provide safety training to our employees.
SM5 Our employees are entitled to leave, provident fund, medical benefits and other facilities.
SM6 We recognize the collective bargaining power of wage rates

Reverse Logistics (RL)

(Lai, et al., 2013)**;** (Dadhich, et al., 2015)**;** (Mariadoss, et al., 2016) (Esfahbodi, et al., 2016) (Esfahbodi, et al., 2017)

RL1 We look at solutions for the reverse flow of the materials after the end-of-life
RL2 We are looking forward to building carbon neutral buildings, which will involve green sourcing, recycling and reusage of plasterboards
RL3 We collaborate with their suppliers to reduce fuel consumption from underutilized routes (eg. Using the lorries and trucks on return journey to get both environmental and economic benefits)
RL6 We track and monitor emissions caused in materials distributions (e.g., carbon footprint).

Part 4 Sustainable supply chain management performance

Environmental performance (ENVP)

(Zhu, et al., 2013); (Esfahbodi, et al., 2016); (Esfahbodi, et al., 2017); (Das, 2017); (Kumara, et al., 2018)

ENVP1 Reduction in the discharge of toxic materials (solid and liquid and gases).
ENVP2 Improve a company’s environmental situation
ENVP3 Protect the biodiversity of the surrounding area

Operational/Financial performance (OPEP)

(Zhu, et al., 2013); (Lai, et al., 2013); (Kumara, et al., 2018)

OPEP1 Increase amount of goods delivered on time
OPEP2 Promote project quality
OPEP3 Improved capacity utilization
OPEP4 Enhanced reputation with customer satisfaction
OPEP5 Improved position in local marketplace
OPEP6 We improved inventory utilization

Economic performance (ECOP)

(Zhu, et al., 2013); (Lai, et al., 2013); (Esfahbodi, et al., 2016); (Esfahbodi, et al., 2017);

ECOP1 Decrease of fee for waste discharge (include treatment)
ECOP2 Decrease of cost for materials purchasing
ECOP3 Decrease of cost for energy consumption
ECOP4 Decrease of fine for environmental accidents
ECOP5 Effective in handling recovery of assets related to our returned materials (include cost containment)
ECOP6 Reduction of inventory investment

Social performance (SOCP)

(Lai, et al., 2013); (Das, 2017); (Kumara, et al., 2018)

SOCP1 Reduction in inequity in remuneration and other perquisites given to the employees of the same level.
SOCP2 Reduction in the differences in compensation package admissible to the employees of different hierarchy.
SOCP3 Improvement in the working environment of the organization and morale of its employees to a considerable level.
SOCP4 Improvement in the corporate image of the firm in terms of the same being responsible towards the community.
SOCP5 Improvement in the opportunities of the surrounding community in respect of employment/business.
SOCP6 Improvement in the literacy/level of education of the surrounding people.
SOCP7 Increase in the proportion of time the surrounding people remain free from ailments due to improved health care facilities

Chinese version (Screenshot of Questionnaire)

PIS 参与者信息声明 | 1 Question

Basic information 基本信息 | 5 Questions

Part 1 Supply chain dynamic capabilities –供应链的动态能力（企业供应链获得可持续竞争力的能力）

Part 2 Supply chain resilience –供应链弹性（企业能处理供应链风险的实践） | 18 Questions

Part 3 Sustainable supply chain management-可持续供应链管理 （经济，环境，社会责任的可持续发展的实...

Part 4 Sustainable supply chain management performance 可持续供应链的绩效 | 21 Questions

Add Block

End of Survey

感谢您抽出宝贵的时间参加此调查。

已记录您的回复。

PIS 参与者信息声明

Q1.1

Skip to

End of Survey if 1 我阅读并理解上述信息。 - 是的 Is Not Selected

Skip to

End of Survey if 2 我同意参加此问卷调查。 - 是的 Is Not Selected

Skip to

End of Survey if 3 我知道，由于我的答案将完全匿名，因此一旦我完成调查... Is Not Selected

Skip to

End of Survey if 4 我确认我已年满18岁。 - 是的 Is Not Selected

这项研究的目的是通过收集问卷，了解动态能力如何影响（调解）供应链弹性实践与可持续供应链实践之间的关系，然后发现能提高中国可持续建筑供应链绩效的实践。这项研究由考文垂大学博士研究员李柯兴主持着这项研究。 你被选中参加这次问卷调查，是你因为您在建筑供应链，或可持续的建筑供应链管理，或建筑的供应链弹性方面具有令人信服的经验。 您参与调查完全是自愿的，您可以通过关闭和退出浏览器在任何阶段选择退出。 如果您乐意参加，请回答以下与可持续供应链管理有关的问题。 您的答案将帮助我们将帮助李柯兴和考文垂大学更好地了解企业如何建立和提高其供应链弹性和可持续供应链。调查大约需要 15分钟才能完成。 您的答案将保密处理，您提供的信息将在任何研究成果/出版物中保持匿名。所有数据和文件将存储Coventry Univeristy Onedrive中。所有纸质记录将存储在考文垂大学Jaguar大楼的上锁文件柜中。首席研究员将承担数据破坏的责任，所有收集的数据将在09/30/2023或之前销毁。 该项目已通过考文垂大学正式的研究伦理程序得到审查和批准。 如想了解更多信息，或者如果您有任何疑问，请联系首席研究员李柯兴(Lik76@uni.coventry.ac.uk)。 如果您有任何问题无法通过首席研究员解决，请联系研究员的主管主管Mahdi Bashiri（ad2594@coventryac.uk）。 感谢您抽空参与此调查。非常感谢您的帮助。

	是的	不
1 我阅读并理解上述信息。	○	○
2 我同意参加此问卷调查。	○	○
3 我知道，由于我的答案将完全匿名，因此一旦我完成调查，就不可能将他们从研究中撤回。	○	○
4 我确认我已年满18岁。	○	○

Import from library　+ Add new question

Basic information 基本信息

Q106 *

贵公司的名称?

Q108

贵公司的类型?

- 客户
- 建筑师和顾问
- 承包商
- 供应商
- 监管机构
- 其他

Q2.2 | Qb

贵公司的公司规模如何（万元）？

- 资产总额≥80000
- 80000>资产总额≥5000
- 5000>资产总额≥300
- 300>资产总额

Q107

贵公司总部所在省份?

- ○ 华北地区（北京市、天津市、河北省、山西省、内蒙古自治区）
- ○ 东北地区（辽宁省、吉林省、黑龙江省）
- ○ 华东地区（上海市、江苏省、浙江省、安徽省、福建省、江西省、山东省、台湾省）
- ○ 华中地区（河南省、湖北省、湖南省）
- ○ 华南地区（广东省、广西壮族自治区、海南省、香港特别行政区、澳门特别行政区）
- ○ 西南地区（重庆市、四川省、贵州省、云南省、西藏自治区）
- ○ 西北地区（陕西省、甘肃省、青海省、宁夏回族自治区、新疆维吾尔自治区）

Q2.1 | Qa

您的职务?

副总裁/董事	项目经理	供应链经理	人力资源经理	其他
○	○	○	○	○

Import from library　+ Add new question

Part 1 Supply chain dynamic capabilities –供应链的动态能力（企业供应链获得可持续竞争力的能力）

Q3.1 SC Sen1

SC Sen1 我们会定期审查市场和项目环境变化对供应链的潜在影响。

完全不正确 0%	几乎不正确 25%	一点正确 50%	相当正确 75%	绝对正确 100%
○	○	○	○	○

Q3.2 SC Sen2

SC Sen2我们定期评价我们的供应商运营状况，以确保它们符合项目工程的需求。

完全不正确 0%	几乎不正确 25%	一点正确 50%	相当正确 75%	绝对正确 100%
○	○	○	○	○

Q3.3 SC Sen3

SC Sen3我们定期与供应链合作伙伴交换有价值知识的文档。

完全不正确 0%	几乎不正确 25%	一点正确 50%	相当正确 75%	绝对正确 100%
○	○	○	○	○

Q3.4 SC Sen4

SC sen4 我们有有效的流程不断的挖掘新的供应商和能合作的互补者（eg. 互补者-能开发清洁材料的供应商，重视环境治理的物业管理。

完全不正确 0%	几乎不正确 25%	一点正确 50%	相当正确 75%	绝对正确 100%
○	○	○	○	○

Q3.5 SC Sen5

SC Sen5我们有适当的流程来识别和响应市场或行业趋势 （包括竞争对手的活动）。

完全不正确 0%	几乎不正确 25%	一点正确 50%	相当正确 75%	绝对正确 100%
○	○	○	○	○

Q3.6 | SC Sei1

SC Sei1我们拥有有效的例程（及时调整的组织形式和业务模型）来识别有价值的新信息和知识并导入供应链中。

完全不正确 0%	几乎不正确 25%	一点正确 50%	相当正确 75%	绝对正确 100%
○	○	○	○	○

Q3.7 | SC Sei2

SC Sei2我们可以成功地建立和维持拥有合作创新的上下游关系。

完全不正确 0%	几乎不正确 25%	一点正确 50%	相当正确 75%	绝对正确 100%
○	○	○	○	○

Q3.8 | SC Sei3

SC Sei3我们拥有有效的例程来指导企业在供应链上的资源投资和科技研发的方向（e.g. 清洁能源材料的研发）。

完全不正确 0%	几乎不正确 25%	一点正确 50%	相当正确 75%	绝对正确 100%
○	○	○	○	○

Q3.9 | SC Rec1

SC Rec1在满足正常需求的情况下，我们的合作者有权利直接对产品做出更改。

完全不正确 0%	几乎不正确 25%	一点正确 50%	相当正确 75%	绝对正确 100%
○	○	○	○	○

Q3.10 | SC Rec2

SC Rec2我们可以在SC中有效地将现有资源整合和组合成新颖的组合,以更好地匹配新的市场需求或工程的临时需求。

完全不正确 0%	几乎不正确 25%	一点正确 50%	相当正确 75%	绝对正确 100%
○	○	○	○	○

Q3.11 | SC Rec3

SC Rec3我们有机制淘汰不符企业发展目标的供应商，同时也有机制发展符合企业计划的新供应商。

完全不正确 0%	几乎不正确 25%	一点正确 50%	相当正确 75%	绝对正确 100%
○	○	○	○	○

Q3.12 | SC Rec4

SC Rec4我们经常与合作伙伴互动，以获取与工程开发，流程创新或物流和最新原材料有关的新知识。

完全不正确 0%	几乎不正确 25%	一点正确 50%	相当正确 75%	绝对正确 100%
○	○	○	○	○

Import from library　+ Add new question

Part 2 Supply chain resilience –供应链弹性（企业能处理供应链风险的实践）

Q99 | CC1

CC1 我们与所有的合作伙伴都有定期的沟通

完全不正确 0%	几乎不正确 25%	一点正确 50%	相当正确 75%	绝对正确 100%
○	○	○	○	○

Q4.1 | CC2

CC2 我们的领导层会在新的项目工程完成后对趋势和新问题进行分析。

完全不正确 0%	几乎不正确 25%	一点正确 50%	相当正确 75%	绝对正确 100%
○	○	○	○	○

Q4.2 | CC3

CC3 我们有详细指示来指导总承包商，分承包商，直接供应商和间接供应商的活动。

完全不正确 0%	几乎不正确 25%	一点正确 50%	相当正确 75%	绝对正确 100%
○	○	○	○	○

Q4.4 | RE1

RE1 我们重视供应商的风险意识（通常会以企业自身的风险制度为参考）。

完全不正确 0%	几乎不正确 25%	一点正确 50%	相当正确 75%	绝对正确 100%
○	○	○	○	○

Q4.5 | RE2

RE2 我们会定期根据市场经济，行业动态，以及项目的当地天气趋势来调整我们的现金储备

完全不正确 0%	几乎不正确 25%	一点正确 50%	相当正确 75%	绝对正确 100%
○	○	○	○	○

Q4.6 | RE3

RE3 我们会对额外的容量和库存进行战略性配。

完全不正确 0%	几乎不正确 25%	一点正确 50%	相当正确 75%	绝对正确 100%
○	○	○	○	○

Q113 | RE4

RE4 我们与供应链上的利益相关者有高度的默契和长远的合作

完全不正确 0%	几乎不正确 25%	一点正确 50%	相当正确 75%	绝对正确 100%
○	○	○	○	○

Q4.7 | CU1

CU1 我们有一个部门来管理供应链风险和中断围变化的隐含含义。

完全不正确 0%	几乎不正确 25%	一点正确 50%	相当正确 75%	绝对正确 100%
○	○	○	○	○

Q4.8 | CU2

CU2 我们重视任何程度的供应链中断向我们展示的可以改进的地方，我们会从中学习和思考如何避免类似的供应链中断。

完全不正确 0%	几乎不正确 25%	一点正确 50%	相当正确 75%	绝对正确 100%
○	○	○	○	○

Q4.9 | CU3

CU3 我们有专业的企业文化能成功激发利益相关者对公司使命充满热情

完全不正确 0%	几乎不正确 25%	一点正确 50%	相当正确 75%	绝对正确 100%
○	○	○	○	○

Q110 | CU4

CU4 我们对工程合同的每一个细节都非常了解

完全不正确 0%	几乎不正确 25%	一点正确 50%	相当正确 75%	绝对正确 100%
○	○	○	○	○

Q111 | CU5

CU5 我们会定期检查项目设计和施工的合理性

完全不正确 0%	几乎不正确 25%	一点正确 50%	相当正确 75%	绝对正确 100%
○	○	○	○	○

Q112 | CU6

CU6 我们会定期评估市场和政策的变化对项目和公司的影响

完全不正确 0%	几乎不正确 25%	一点正确 50%	相当正确 75%	绝对正确 100%
○	○	○	○	○

Q4.10 | AG1

AG1 在需要时，我们可以调整供应链运营以执行决策所需的范围 (我们的供应商，物流，员工通常是能满足多种需要的)。

完全不正确 0%	几乎不正确 25%	一点正确 50%	相当正确 75%	绝对正确 100%
○	○	○	○	○

Q4.11 | AG2

AG2 我们公司的供应链能够通过快速恢复其产品流来充分应对意外中断。

完全不正确 0%	几乎不正确 25%	一点正确 50%	相当正确 75%	绝对正确 100%
○	○	○	○	○

Q4.12 | AG3

AG3 我们重视与客户的沟通，并定期审查客户的反馈，来判断决策的价值性。

完全不正确 0%	几乎不正确 25%	一点正确 50%	相当正确 75%	绝对正确 100%
○	○	○	○	○

Q4.13 | AG5

AG4 我们以安全的前提，简化了工作流程，减少了建筑过程中不能产生价值的活动。

完全不正确 0%	几乎不正确 25%	一点正确 50%	相当正确 75%	绝对正确 100%
○	○	○	○	○

Import from library　　+ Add new question

Part 3 Sustainable supply chain management-可持续供应链管理 （经济，环境，社会责任的可持续发展的...

Q5.1 SPD1

SPD1我们在施工期间使用的可再生能源

完全不正确 0%	几乎不正确 25%	一点正确 50%	相当正确 75%	绝对正确 100%
○	○	○	○	○

Q5.2 SPD2

SPD2 我们主导的工程项目会使用能循环利用的, 可回收的，能焚化的材料。

完全不正确 0%	几乎不正确 25%	一点正确 50%	相当正确 75%	绝对正确 100%
○	○	○	○	○

Q5.3 SPD3

SPD3 我们主导的工程的会避免或减少使用有害材料。

完全不正确 0%	几乎不正确 25%	一点正确 50%	相当正确 75%	绝对正确 100%
○	○	○	○	○

+ Add page break

Q5.4 SPD4

SPD4 我们不考虑我们项目中使用的材料的生物降解性。

完全不正确 0%	几乎不正确 25%	一点正确 50%	相当正确 75%	绝对正确 100%
○	○	○	○	○

Q93 SPD5

SPD5 我们在设计期间考虑标准材料的可持续替代品

完全不正确 0%	几乎不正确 25%	一点正确 50%	相当正确 75%	绝对正确 100%
○	○	○	○	○

Q94 SPD6

SPD6 我们考虑了施工期对周围环境的可持续性影响

完全不正确 0%	几乎不正确 25%	一点正确 50%	相当正确 75%	绝对正确 100%
○	○	○	○	○

Q5.8 | ECC1

ECC1 我们与客户合作进行生态设计和清洁生产。

完全不正确 0%	几乎不正确 25%	一点正确 50%	相当正确 75%	绝对正确 100%
○	○	○	○	○

Q5.9 | ECC2

ECC2 我们与供应商合作，要求其提供环保包装或减少包装。

完全不正确 0%	几乎不正确 25%	一点正确 50%	相当正确 75%	绝对正确 100%
○	○	○	○	○

Q5.10 | ECC3

ECC3 我们与供应商合作建立逆向物流关系。

完全不正确 0%	几乎不正确 25%	一点正确 50%	相当正确 75%	绝对正确 100%
○	○	○	○	○

Q5.5 | EP1

EP1 我们使用环境标准选择供应商（e.g. 供应商已通过ISO 14000系列认证）。

完全不正确 0%	几乎不正确 25%	一点正确 50%	相当正确 75%	绝对正确 100%
○	○	○	○	○

Q95 | EP2

EP2 我们与供应商就环境目标有密切合作

完全不正确 0%	几乎不正确 25%	一点正确 50%	相当正确 75%	绝对正确 100%
○	○	○	○	○

Q5.6 | EP3

EP3 我们定期对供应商的内部管理进行环境审核 （e.g. 接合企业自身的内部绿色管理）。

完全不正确 0%	几乎不正确 25%	一点正确 50%	相当正确 75%	绝对正确 100%
○	○	○	○	○

Q5.7 | EP4

EP4 我们对所购物品有环境要求。

完全不正确 0%	几乎不正确 25%	一点正确 50%	相当正确 75%	绝对正确 100%
○	○	○	○	○

Q5.14 | IGM5

IGM5 我们已通过ISO 14000系列认证。

完全不正确 0%	几乎不正确 25%	一点正确 50%	相当正确 75%	绝对正确 100%
○	○	○	○	○

Q97 | IGM11

IGM6 我们会评估可能影响项目完成的可持续性问题（包括环境，社会，经济)

完全不正确 0%	几乎不正确 25%	一点正确 50%	相当正确 75%	绝对正确 100%
○	○	○	○	○

Q5.15 | IGM7

IGM7 我们的内部绩效评估系统结合了环境因素。

完全不正确 0%	几乎不正确 25%	一点正确 50%	相当正确 75%	绝对正确 100%
○	○	○	○	○

Q5.16 | IGM9

IGM8 我们的目标是消除一切形式的腐败。

完全不正确 0%	几乎不正确 25%	一点正确 50%	相当正确 75%	绝对正确 100%
○	○	○	○	○

Page Break

Q5.11 | IGM1

IGM1 我们的中高层致力于防止污染的计划。

完全不正确 0%	几乎不正确 25%	一点正确 50%	相当正确 75%	绝对正确 100%
○	○	○	○	○

Q96 | IGM10

IGM2 我们会确定预期项目生命周期时考虑环境可持续性

完全不正确 0%	几乎不正确 25%	一点正确 50%	相当正确 75%	绝对正确 100%
○	○	○	○	○

Q100 | IGM3

IGM3 我们有跨部门合作以实现环境改善

完全不正确 0%	几乎不正确 25%	一点正确 50%	相当正确 75%	绝对正确 100%
○	○	○	○	○

Q5.13 | IGM4

IGM4 我们为工人进行了环境方面的特殊培训 。

完全不正确 0%	几乎不正确 25%	一点正确 50%	相当正确 75%	绝对正确 100%
○	○	○	○	○

Q5.18 | IR1

IR1 我们的目标是出售多余的库存/材料。

完全不正确 0%	几乎不正确 25%	一点正确 50%	相当正确 75%	绝对正确 100%
○	○	○	○	○

Q5.19 | IR2

IR2 我们的目标是销售废料和废旧材料。

完全不正确 0%	几乎不正确 25%	一点正确 50%	相当正确 75%	绝对正确 100%
○	○	○	○	○

Q5.20 | IR3

IR3 我们的目标是出售多余的资本设备。

完全不正确 0%	几乎不正确 25%	一点正确 50%	相当正确 75%	绝对正确 100%
○	○	○	○	○

Q5.21 | DM1

DM1 所有企业供应商都有平等的机会成为我们的合作伙伴（即，性别，国籍没有区别）。

完全不正确 0%	几乎不正确 25%	一点正确 50%	相当正确 75%	绝对正确 100%
○	○	○	○	○

Q5.22 | DM2

DM2 所有工人都有与我们同等的就业机会（即，性别，国籍没有区别）。

完全不正确 0%	几乎不正确 25%	一点正确 50%	相当正确 75%	绝对正确 100%
○	○	○	○	○

Q5.23 | DM3

DM3 所有工人均享有同等待遇和晋升机会。

完全不正确 0%	几乎不正确 25%	一点正确 50%	相当正确 75%	绝对正确 100%
○	○	○	○	○

Q5.24 | CDI1

CDI1 我们努力为当地社区改善本地就业机会。

完全不正确 0%	几乎不正确 25%	一点正确 50%	相当正确 75%	绝对正确 100%
○	○	○	○	○

Q5.25 | CDI2

CDI2 我们不断促进社区教育，公共卫生和文化发展（例如，员工为当地慈善机构提供志愿服务）。

完全不正确 0%	几乎不正确 25%	一点正确 50%	相当正确 75%	绝对正确 100%
○	○	○	○	○

Q5.27 | CDI7

CDI3 我们熟悉并尊重当地的环境法律和政策。

完全不正确 0%	几乎不正确 25%	一点正确 50%	相当正确 75%	绝对正确 100%
○	○	○	○	○

Q5.26 | CDI4

CDI4 我们参与了当地社区发展计划（与政府机构和行业团体的伙伴关系）。

完全不正确 0%	几乎不正确 25%	一点正确 50%	相当正确 75%	绝对正确 100%
○	○	○	○	○

Q98 | CDI5

CDI5 在我们的组织中，不允许使用童工和强迫劳动

完全不正确 0%	几乎不正确 25%	一点正确 50%	相当正确 75%	绝对正确 100%
○	○	○	○	○

Q5.28 | SM1

SM1 我们会定期对仓库进行安全检查，特别是在特殊天气后。

完全不正确 0%	几乎不正确 25%	一点正确 50%	相当正确 75%	绝对正确 100%
○	○	○	○	○

Q5.29 | SM2

SM2 我们将定期对我们的项目进行安全检查和维护。

完全不正确 0%	几乎不正确 25%	一点正确 50%	相当正确 75%	绝对正确 100%
○	○	○	○	○

Q5.30 | SM3

SM3 我们保证员工在工作环境中的健康和安全（例如“零伤害”安全管理）。

完全不正确 0%	几乎不正确 25%	一点正确 50%	相当正确 75%	绝对正确 100%
○	○	○	○	○

Q5.31 | SM4

SM4 我们定期为员工提供安全培训。

完全不正确 0%	几乎不正确 25%	一点正确 50%	相当正确 75%	绝对正确 100%
○	○	○	○	○

Q5.32 | SM5

SM5 我们的员工有权请假，公积金，医疗福利和其他便利。

完全不正确 0%	几乎不正确 25%	一点正确 50%	相当正确 75%	绝对正确 100%
○	○	○	○	○

Q5.33 | SM6

SM6 我们认识到工资率的集体谈判能力。

完全不正确 0%	几乎不正确 25%	一点正确 50%	相当正确 75%	绝对正确 100%
○	○	○	○	○

Q5.34 | RL1

RL1 我们着眼于材料报废后的逆流解决方案。

完全不正确 0%	几乎不正确 25%	一点正确 50%	相当正确 75%	绝对正确 100%
○	○	○	○	○

Q5.35 | RL2

RL2 我们期待建造碳中和建筑，这将涉及绿色采购，石膏板的回收和再利用。

完全不正确 0%	几乎不正确 25%	一点正确 50%	相当正确 75%	绝对正确 100%
○	○	○	○	○

Q5.36 | RL3

RL3 我们与供应商合作，以减少未充分利用的路线的燃油消耗（例如，在返程途中使用卡车和卡车来获得环境和经济效益）。

完全不正确 0%	几乎不正确 25%	一点正确 50%	相当正确 75%	绝对正确 100%
○	○	○	○	○

Q5.37 | RL6

RL4 我们跟踪并监控材料分销过程中产生的排放（例如，碳足迹）。

完全不正确 0%	几乎不正确 25%	一点正确 50%	相当正确 75%	绝对正确 100%
○	○	○	○	○

Part 4 Sustainable supply chain management performance 可持续供应链的绩效

Q6.1 ENVP1

ENVP1 我们减少了有毒物质（固体，液体和气体）的排放。

完全不正确 0%	几乎不正确 25%	一点正确 50%	相当正确 75%	绝对正确 100%
○	○	○	○	○

Q6.2 ENVP2

ENVP2 我们改善了公司的环境状况。

完全不正确 0%	几乎不正确 25%	一点正确 50%	相当正确 75%	绝对正确 100%
○	○	○	○	○

Q6.3 ENVP3

ENVP3 我们保护了周边生物多样性。

完全不正确 0%	几乎不正确 25%	一点正确 50%	相当正确 75%	绝对正确 100%
○	○	○	○	○

Q6.4 OPEP1

OPEP1 我们提高了工程准时交付率（满足时间，质量，预算目标）

完全不正确 0%	几乎不正确 25%	一点正确 50%	相当正确 75%	绝对正确 100%
○	○	○	○	○

Q6.5 OPEP2

OPEP2 我们提升了项目质量。

完全不正确 0%	几乎不正确 25%	一点正确 50%	相当正确 75%	绝对正确 100%
○	○	○	○	○

Q6.6 OPEP3

OPEP3 我们提高了资本利用率。

完全不正确 0%	几乎不正确 25%	一点正确 50%	相当正确 75%	绝对正确 100%
○	○	○	○	○

Q6.7 OPEP4

OPEP4 我们通过客户满意度提了高声誉。

完全不正确 0%	几乎不正确 25%	一点正确 50%	相当正确 75%	绝对正确 100%
○	○	○	○	○

Q6.8 OPEP6

OPEP5 我们增加了在国际市场上获取订单的机会。

完全不正确 0%	几乎不正确 25%	一点正确 50%	相当正确 75%	绝对正确 100%
○	○	○	○	○

Q6.9 ECOP6

OPEP6 我们提高了库存利用率。

完全不正确 0%	几乎不正确 25%	一点正确 50%	相当正确 75%	绝对正确 100%
○	○	○	○	○

Q6.10 | ECOP1

ECOP1 我们减少废物排放费（包括处理费）。

完全不正确 0%	几乎不正确 25%	一点正确 50%	相当正确 75%	绝对正确 100%
○	○	○	○	○

Q6.11 | ECOP2

ECOP2 我们减少了材料采购成本。

完全不正确 0%	几乎不正确 25%	一点正确 50%	相当正确 75%	绝对正确 100%
○	○	○	○	○

Q6.12 | ECOP3

ECOP3 我们降低了能源消耗成本。

完全不正确 0%	几乎不正确 25%	一点正确 50%	相当正确 75%	绝对正确 100%
○	○	○	○	○

Q6.13 | ECOP4

ECOP4 我们减少了环境事故罚款。

完全不正确 0%	几乎不正确 25%	一点正确 50%	相当正确 75%	绝对正确 100%
○	○	○	○	○

Q6.14 | ECOP5

ECOP5 我们有效处理与我们退货产品相关的资产回收（包括成本控制）。

完全不正确 0%	几乎不正确 25%	一点正确 50%	相当正确 75%	绝对正确 100%
○	○	○	○	○

Q101 | ECOP6

ECOP6 公司从实施可持续发展实践中获得了经济利益

完全不正确 0%	几乎不正确 25%	一点正确 50%	相当正确 75%	绝对正确 100%
○	○	○	○	○

Q6.15 | SOCP1

SOCP1 我们减少给予同级别员工的薪酬和其他福利方面的不平等。

完全不正确 0%	几乎不正确 25%	一点正确 50%	相当正确 75%	绝对正确 100%
○	○	○	○	○

Q6.16 | SOCP2

SOCP2 减少不同等级的员工可以接受的薪酬待遇差异。

完全不正确 0%	几乎不正确 25%	一点正确 50%	相当正确 75%	绝对正确 100%
○	○	○	○	○

Q6.17 | SOCP3

SOCP3 将组织的工作环境和员工的士气提高到相当高的水平。

完全不正确 0%	几乎不正确 25%	一点正确 50%	相当正确 75%	绝对正确 100%
○	○	○	○	○

Q6.18 | SOCP4

SOCP4 从对社区负责的角度而言，提高了公司的企业形象。

完全不正确 0%	几乎不正确 25%	一点正确 50%	相当正确 75%	绝对正确 100%
○	○	○	○	○

Q6.19 | SOCP5

SOCP5 改善周围社区在就业/商业方面的机会。

完全不正确 0%	几乎不正确 25%	一点正确 50%	相当正确 75%	绝对正确 100%
○	○	○	○	○

Q6.20 | SOCP6

SOCP6 改善周围人的素养/教育水平。

完全不正确 0%	几乎不正确 25%	一点正确 50%	相当正确 75%	绝对正确 100%
○	○	○	○	○