Adaptive Fuzzy Prescribed-Time Connectivity-Preserving Consensus of Stochastic Nonstrict-feedback Switched Multiagent Systems

Jiale Yi, Jing Li and Chenguang Yang

***Abstract*—An adaptive fuzzy prescribed-time connectivity-preserving consensus protocol is designed for a class of stochastic nonstrict-feedback multiagent systems, in which periodic disturbances, switched nonlinearities, input saturation and limited communication ranges are taken into consideration simultaneously. The connectivity, determined by the limited communication ranges and initial positions of agents, is preserved by incorporating an error transformation. Further, common Lyapunov function is considered to deal with the switching modes. By combining reduced fuzzy logic system with Fourier series expansion, a novel approximator is constructed to deal with periodically disturbed nonlinearities and to surmount the difficulty brought by the nonstrict-feedback structure. More importantly, distinctly from the existing finite/fixed-time control strategies where the settling time is heavily dependent on the accurate value of the initial states and control parameters, the settling time of the proposed prescribed-time consensus is completely independent of the initialization and control parameters and can be given a priori only according to actual demands. Based on the Lyapunov stability theory, the designed controller ensures that the connectivity-preserving consensus is achieved in prescribed time and all the signals remain bounded in probability. To the end, the feasibility of the proposed consensus protocol is demonstrated by simulation.**

***Index Terms*—Prescribed-time consensus, connectivity preservation, reduced fuzzy logic system, switched nonstrict-feedback structure, periodically disturbed nonlinearities.**

I. Introduction

OVER the past decades, multiagent systems (MASs) are widely applied in essential practice, e.g., smart power grids, unmanned aircraft systems, autonomous mobile robots. The research on consensus of MASs, which is one fundamental issue in MASs control fields, has gained great attention. Uncertainty is inevitable in the modeling process and then many handling methods are proposed. For instance, Takagi-Sugeno fuzzy controllers are carried out in [1], [2] to control servosystems. Among these methods, fuzzy logic system (FLS) [3] and neural network (NN) [4] are the most popular and effective tools to tackle unknown uncertainties in the controlled systems. The authors in [3] study adaptive fuzzy optimal control. FLS is adopted to model system nonlinearities. However, the controlled systems considered in these achievements are based on conventional backstepping recursive design and restricted to lower triangular structure.

In reality, many systems can be modeled as nonstrict-feedback form, e.g., ship maneuvering system [5], and this is a more general system structure. To deal with nonstrict-feedback structure, variable separation method is utilized, where the system function is assumed less than a strictly increasing function [6], [7]. The assumption condition is relative stringent. Later, with the help of the structural characteristic of Gaussian basis functions, adaptive-backstepping-based FLS/NN control algorithms are presented to relax this restriction. The authors in [8] investigate the adaptive neural consensus for switched MASs in nonstrict-feedback form. Nonstrict-feedback terms are handled by utilizing the property of Gaussian basis functions. In [9], to successfully apply backstepping design, FLS is adopted to assist controller design. Note that the unknown nonlinearities in these literatures are disturbance-independent. In fact, periodic disturbances often exist in actual systems. Van der Pol oscillator is a typical systems which possesses periodic exciting signals [10]. The FLS/NN cannot be applied to model the function which contains unmeasured periodic disturbances. Fortunately, inspired by Fourier series expansion (FSE) in [11], FSE-FLS and FSE-NN approximator are proposed in [12] and [13], respectively, to depict periodically disturbed functions in single system. Subsequently, many related results are emerged, such as [14], [15]. Although these approximators overcome the design difficulty caused by disturbance-dependent functions, the investigated systems are limited to lower triangular structure. The previously control schemes using variable separation method and Gaussian basis function property are unavailable for periodically disturbed nonstrict-feedback MASs. Meanwhile, switched dynamics are inevitably in engineering and quintessential instances include traffic surveillance control systems and switched circuits. To date, how to cope with nonstrict-feedback MASs subject to periodically disturbed nonlinearities and switched dynamics is still an open problem. This motivates our research.

It is well known that mobile robots can only interact with others within the ranges limited by the communication capability of the equipped devices. The restriction is disregarded in aforementioned achievements. Taking the limited communication capability into account leads to a meaningful research: preserving the connectivity of the communication graph. The potential function and error transformation approach are presented in [16] and [17] to preserve the connectivity of MASs subject to limited communication ranges. Alternatively, many

This work is supported by National Natural Science Foundation of China (61673014). (*Corresponding author: Jing Li, Chenguang Yang.*)

Jiale Yi, Jing Li are with the School of Mathematics and Statistics, Xidian University, Xi'an 710071, China (e-mail: jialeyi2020@126.com; xidianjing@126.com).

Chenguang Yang is with the Bristol Robotics Laboratory, University of the West of England, Bristol BS16 1QY, U.K. (e-mail: cyang@ieee.org).

advanced applications, such as interplanetary exploration, wide aperture earth monitoring and docking, have performance requirements on response time due to production efficiency or security reasons. For instance, in power systems, the less time the voltage take to reach to the nominal values, the less accident propagates and the less economic losses are. Finite-time and fixed-time stability theories are put forward in [18] and [19], which have the advantages of faster convergence time, better robustness to uncertainties, and etc. Some favorable achievements on finite/fixed-time connectivity-preserving control algorithms have been published based on the design idea of [18], [19]. Finite-time control of second-order MASs subject to limited sensing ranges is investigated in [20]. The authors in [21] study the finite-time control issue with connectivity preservation for nonlinear MASs. For unmanned surface vehicles with limited sensing ranges, the finite-time path maneuvering problem is addressed in [22]. The settling time of finite-time is heavily dependent on the initial states, which results in that the settling time may increase as initial states aggrandize. Moreover, in practice, the initial states may not easily to be available. The authors in [23] and [24] investigate fixed-time control problem for second-order and Euler-Lagrange-type MASs with limited communication ranges, respectively. Fixed-time control protocol with preserved connectivity is provided in [25] for strict-feedback MASs. It is noted that, in fact, the setting time of fixed-time is a function which relies upon some control parameters. And thus, the setting time can not be given specifically. Besides, the boundary of the settling time is estimated too conservatively, which means that the estimate is much larger than the real settling time. For instance, the estimate is about 100 seconds which is much larger than the settling time obtained by the simulation in [19]. The finite/fixed-time control schemes with connectivity preservation should be developed since some missions are time-pressured. As a result, it is necessary to achieve the consensus in prescribed time to meet the actual convergence requirements. Note that few scholars pay attention to the prescribed-time connectivity-preserving consensus control problem which is essential and has extensive research significance.

Inspired by the foregoing observations, this paper investigates prescribed-time consensus control problem with preserved connectivity for stochastic nonstrict-feedback switched MASs with periodic disturbances. Compared with the previous works, the following contributions are worth to be emphasized.

1) Unlike the most existing works on stochastic MASs [6], [7], the investigated stochastic system model contains disturbance-dependent nonlinearities which allow unmeasured periodic disturbances to get into the unknown functions nonlinearly. Moreover, switched dynamics are considered simultaneously. Therefore, the model is more general and far different from the ones in the previous works.
2) Differently from the finite/fixed-time consensus in [27], [28] where the settling time cannot be specified and meanwhile the estimated boundary is conservative, the proposed prescribed-time control strategy not only facilitates the theoretical development but also is in line with practical applications since the settling time can be prescribed arbitrarily before the controller is conducted.
3) Compared with the finite/fixed-time connectivity-preserving control schemes in [21], [23], [25] where artificial potential function method is employed, an error transformation is incorporated to preserve the connectivity to achieve the desired control objective with convergence requirements.
4) From the point of view of function approximation, FLS [3] and NN [4] are invalid since the MASs in non-triangular form are considered. A novel reduced-FLS (RFLS) approximator [29] is employed to ensure that the adaptive backstepping design is available for non-triangular structure.

II. Preliminaries and Problem Formulation

A. Communication Graph

The communication among agents subjected to limited communication ranges is described by $\mathcal{G} \triangleq (\mathcal{V}, \mathcal{E})$, where $\mathcal{V} \triangleq \{0, 1, 2, \ldots, N\}$ is nodes set with one leader node (marked by 0) and N follower nodes (indexed by $1, 2, \ldots, N$), $\mathcal{E} \triangleq \{(i,j), i, j \in \mathcal{V}, i \neq j\}$ is edges set. For $i \in \mathcal{V} - \{0\}, j \in \mathcal{V}$, it follows that

$$(i,j) \in \mathcal{E} \Longleftrightarrow |y_i - y_j| < R_j, \forall\, t \geq 0, \tag{1}$$

where constant $R_j > 0$ denotes the communication range of agent j; y_i denotes the position of agent i. The neighbor set of follower i is defined as $\mathcal{N}_i = \{j \mid (i,j) \in \mathcal{E}\}$. Communication weight a_{ij} is given by

$$a_{ij} = \begin{cases} a_{ij}^*, \text{if } (i,j) \in \mathcal{E} \\ 0, \text{ otherwise} \end{cases} \tag{2}$$

with constant $a_{ij}^* > 0$.

Assumption 1: [17] There exists a directed spanning tree in communication graph $\mathcal{G}$ at $t = 0$ rooted by the leader.

Remark 1: Assumption 1 is a mild assumption and has also been presented in [20]–[25]. Practically, most of the mobile robots only can interact with others through wireless vehicles within limited ranges. If the distance between two robots is farther away and gets out of the sensing ranges, then the distributed control objective may not be achieved duo to the broken connectivity. Therefore, this assumption is reasonable and in line with fact.

B. FLS and FSE Approximator

The if-then rules are used to construct FLS [30]: R^m: If X_1 is F_1^m and X_2 is F_2^m and $\ldots$ and X_n is F_n^m, then y is G^m, where $m = 1, 2, \ldots, r_1 > 1$ is the number of fuzzy rules; $X = [X_1, X_2, \ldots, X_n]^T$ and y are the FLS's input and output; F_i^m and G^m are fuzzy sets related to $\mu_{F_i^m}(X_i)$ and $\mu_{G^m}(y)$. Through a series of fuzzy strategies, the output of the FLS is

$$y(X) = \frac{\sum_{m=1}^{r_1} \bar{y}_m \prod_{i=1}^{n} \mu_{F_i^m}(X_i)}{\sum_{m=1}^{r_1} \left(\prod_{i=1}^{n} \mu_{F_i^m}(X_i) \right)}, \tag{3}$$

where $\bar{y}_m = \max_{y\in R} \mu_{G^m}(y)$. Then, continuous function $\digamma(X)$ can be described by an FLS over a compact set Ω_X as

$$\digamma(X) = W^T\Phi(X) + \varepsilon(X), X \in \Omega_X, \tag{4}$$

where ideal weight vector $W = [W_1, W_2, \ldots, W_{r_1}]^T$ with $W_m = \bar{y}_m$; fuzzy basis vector $\Phi(X) = [\Phi_1(X), \Phi_2(X), \ldots, \Phi_{r_1}(X)]^T$ with $\Phi_m(X) = \frac{\prod_{i=1}^n \mu_{F_i^m}(X_i)}{\sum_{m=1}^{r_1}\left(\prod_{i=1}^n \mu_{F_i^m}(X_i)\right)}$; approximation error $\varepsilon(X)$ satisfies $|\varepsilon(X)| < \bar{\varepsilon}$ with constant $\bar{\varepsilon} > 0$. The construction of FLS is associated with the choice of fuzzy membership function [31]. Commonly, for $m = 1, 2, \ldots, r_1$, $\mu_{F^m}(X) = \prod_{i=1}^n \mu_{F_i^m}(X_i)$ can be chosen as the Guassian-type membership function with $\mu_{F^m}(X) = \exp\Big[-\frac{(X-a_m)^T(X-a_m)}{2(b_m)^2}\Big]$, where a_m and b_m denote the centers and widths, respectively. Alternatively, inspired by [11], periodic disturbance $\vartheta(t)$ could be presented by an FSE

$$\vartheta(t) = \theta^T\phi(t) + \epsilon(t), \tag{5}$$

where weight vector $\theta = [\theta_1, \theta_2, \ldots, \theta_{r_2}]^T$; basis function vector $\phi(t) = [\phi_1(t), \phi_2(t), \ldots, \phi_{r_2}(t)]^T$ with $\phi_1(t) = 1$, $\phi_{2m}(t) = \sqrt{2}\sin(2\pi mt/T)$, $\phi_{2(m+1)}(t) = \sqrt{2}\cos(2\pi mt/T)$, $m = 1, 2, \ldots, (r_2-1)/2$; $\epsilon(t)$ is the bounded truncation error. Then, taking (5) as the input of (4) yields

$$\digamma(X, \vartheta(t)) = W^T\Phi(\bar{X}_k, \theta^T\phi(t)) + \omega(X, t), \tag{6}$$

where $\omega(X, t) = W^T\Phi(\bar{X}_k, \theta^T\phi(t) + \epsilon(t)) - W^T\Phi(\bar{X}_k, \theta^T\phi(t)) + \varepsilon(X, \vartheta(t))$ satisfies $|\omega(X, t)| \leq \bar{\omega}$ with constant $\bar{\omega} > 0$.

Lemma 1: [12] For (6), it holds

$$\begin{aligned} &W^T\Phi(\bar{X}_k, \theta^T\phi(t)) - \hat{W}^T\Phi(\bar{X}_k, \hat{\theta}^T\phi(t)) \\ &\quad = \tilde{W}^T(\hat{\Phi} - \hat{\Phi}'\hat{\theta}^T\phi(t)) + \hat{W}^T\hat{\Phi}'\tilde{\theta}^T\phi(t) + \beta, \end{aligned} \tag{7}$$

where $\hat{W}, \hat{\theta}$ are the estimates of W, θ; $\tilde{W} = W - \hat{W}$, $\tilde{\theta} = \theta - \hat{\theta}$; $\hat{\Phi} = \Phi(\bar{X}_k, \hat{\theta}^T\phi(t))$, $\hat{\Phi}' = [\hat{\Phi}'_1, \hat{\Phi}'_2, \ldots, \hat{\Phi}'_{r_1}]^T$ with $\hat{\Phi}'_m = \frac{\partial\Phi_m(\bar{X}_k, \vartheta(t))}{\partial\vartheta(t)}|_{\vartheta(t)=\hat{\theta}^T\phi(t)}$, $m = 1, 2, \ldots, r_1$. β is bounded by $|\beta| \leq \|\theta\|\|\phi(t)\hat{W}^T\hat{\Phi}'\| + \|W\|\|\hat{\Phi}'\hat{\theta}^T\phi(t)\| + |W|_1$, where $\|\cdot\|$ and $|\cdot|_1$ are the 2-norm and 1-norm operation.

C. System Description

Follower i of the considered stochastic nonstrict-feedback switched MASs is governed by the following system subject to unmeasured periodic disturbances

$$\begin{aligned} &\mathrm{d}x_{i,k} = [x_{i,k+1} + f_{i,k}^{\sigma_i(t)}(x_i, d_{i,k}(t))]\mathrm{d}t + g_{i,k}^{\sigma_i(t)}(x_i, d_{i,k}(t))\mathrm{d}w, \\ &\mathrm{d}x_{i,n} = [u_i(v_i) + f_{i,n}^{\sigma_i(t)}(x_i, d_{i,n}(t))]\mathrm{d}t + g_{i,n}^{\sigma_i(t)}(x_i, d_{i,n}(t))\mathrm{d}w, \\ &y_i = x_{i,1}, i = 1, 2, \ldots, N, \end{aligned} \tag{8}$$

where $k = 1, 2, \ldots, n-1$; $x_i = [x_{i,1}, x_{i,2}, \ldots, x_{i,n}]^T$ denotes the state vector; w is an r-dimensional standard Wiener process; $\sigma_i(t) : [t_0, +\infty] \to \beth_i = \{1, 2, \ldots, \gimel_i\}$ is the switching signal with the number of modes $\gimel_i$ and initial moment t_0; for $l_i \in \beth_i$, $f_{i,k}^{l_i}(\cdot), g_{i,k}^{l_i}(\cdot)$ are unknown continuous functions; $d_{i,k}(t)$ is unmeasured periodic disturbance; v_i, y_i stand for the controller and system output. $u_i(v_i)$ represents saturation-type nonlinearity

$$u_i(v_i) = \mathrm{Sat}(v_i) = \begin{cases} v_{M_i}, & \text{if } v_i > v_{M_i}, \\ v_i, & \text{if } v_{m_i} \leq v_i \leq v_{M_i}, \\ v_{m_i}, & \text{if } v_i < v_{m_i}, \end{cases} \tag{9}$$

where constants $v_{M_i} > 0, v_{m_i} < 0$ are the parameters of $\mathrm{Sat}(v_i)$. The leader is generated by

$$\dot{y}_0 = f_0(y_0, t), \tag{10}$$

where y_0 is the output which is available only for the followers satisfying $0 \in \mathcal{N}_i$; $f_0(y_0, t)$ is an unknown continuous function.

Remark 2: The research on stochastic nonlinear MASs has gained great attention over past years. The main difference between deterministic and stochastic system control is caused by the fact that the differential of Lyapunov function along with stochastic model includes Hessian term, which leads to that the stability analysis for stochastic systems is different from deterministic ones.

Definition 1: Prescribed-time connectivity-preserving consensus of stochastic nonstrict-feedback switched MASs (8)-(10) is said to be achieved if there exist a constant $\epsilon > 0$ and prescribed time $\mathcal{T} > 0$ such that for $i = 1, 2, \ldots, N$ and $j \in \mathcal{N}_i$, consensus errors $\delta_i = y_i - y_0$ satisfy $\lim_{t\to\mathcal{T}} |y_i - y_0| = \epsilon$ and $|y_i - y_0| < \epsilon, \forall\, t \geq \mathcal{T}$, and meanwhile if $|y_i(0) - y_j(0)| < R_j$, then $|y_i - y_j| < R_j, \forall\, t > 0$.

The control objective is to design an adaptive fuzzy control scheme for stochastic MASs (8)-(10) to guarantee that the consensus defined in Definition 1 can be achieved even in the presence of periodically disturbed nonlinearities, nonstrict-feedback structure, switched dynamics and input saturation.

III. Controller Design and Stability Analysis

In this section, an adaptive fuzzy prescribed-time connectivity-preserving consensus control scheme is propsoed for stochastic MASs (8)-(10).

A. Error Definition

First, define error signals $z_{i,1}, z_{i,k}$ as

$$z_{i,1} = \frac{\underline{h}(t)\bar{h}(t)e_i}{(\underline{h}(t) + e_i)(\bar{h}(t) - e_i)}, \tag{11}$$

$$z_{i,k} = x_{i,k} - \bar{\alpha}_{i,k-1}, \zeta_{i,k-1} = \bar{\alpha}_{i,k-1} - \alpha_{i,k-1}, \tag{12}$$

where $k = 2, 3, \ldots, n$; $\underline{h}(t), \bar{h}(t)$ are two continuous differentiable functions given later; e_i is distributed consensus error given by

$$e_i = \sum_{j=0}^{N} a_{ij}s_{ij}, s_{ij} = \ln\frac{R_j + (y_i - y_j)}{R_j - (y_i - y_j)}; \tag{13}$$

$\zeta_{i,k-1}$ is the boundary layer error of dynamic surface control (DSC) technique; virtual controller $\alpha_{i,k-1}$ is derived by nonlinear filter

$$\begin{aligned} &\tau_{i,k}\dot{\bar{\alpha}}_{i,k} = -\zeta_{i,k} - \tau_{i,k}\frac{\zeta_{i,k}^3\hat{P}_{i,k}^2}{|\zeta_{i,k}^3|\hat{P}_{i,k} + \kappa} - \frac{3}{2}\tau_{i,k}\frac{\zeta_{i,k}\hat{Q}_{i,k}^2}{\zeta_{i,k}^2\hat{Q}_{i,k} + \kappa}, \\ &\bar{\alpha}_{i,k}(0) = \alpha_{i,k}(0), k = 1, 2, \ldots, n-1, \end{aligned} \tag{14}$$

where $\bar{\alpha}_{i,k}$ is the filtered value of $\alpha_{i,k}$, $\tau_{i,k}, \kappa > 0$ are design parameters; $\hat{P}_{i,k}, \hat{Q}_{i,k}$ are the estimates of $P_{i,k}, Q_{i,k}$ specified later.

Remark 3: In conventional adaptive backstepping design procedure, when the order of controlled systems rises, the repeated derivatives of the virtual controller will become complicated, which is the so-called "explosion of complexity" problem. "explosion of complexity" is successfully tackled via DSC technique. Differently from the preceding DSC technique with linear filter [4], [9], nonlinear filter (14) is adopted. Specifically, in the published linear-filter-based control schemes, the unknown upper bound of virtual controller's differential is neglected, which makes the difficulty in achieving favourable control performance. For instance, when putting it into the tail term [9] or the boundary layer errors' coefficient [4] of the Lyapunov function differential, which may leads to that it is difficult to select control parameters to achieve desired performance. In present work, nonlinear filter (14) surmounts the limitations.

Remark 4: According to Lemma 2 in [32], it follows that the boundedness and convergence of e_i can ensure the preserved connectivity and consensus. Therefore, the following contents will focus on how to obtain the boundedness and prescribed-time convergence of e_i.

To ensure the prescribed-time convergence of e_i, a continuously differentiable and monotonically decreasing function is presented

$$h(t) = \begin{cases} (h(0)-\iota)\Big(1-(a/d)t\Big)^a + \iota, 0 \le t < \mathcal{T}, \\ \iota, \qquad\qquad\qquad\qquad t \ge \mathcal{T}, \end{cases} \tag{15}$$

where $h(0) > \iota$, $a, d \in R^+, \iota > 0$ are design parameters.

Remark 5: The value of parameter ι determines the maximum permissible size of errors in the steady state. Settling time $\mathcal{T}$ is dependent on constants a, d. Consequently, by selecting appropriate parameters for function $h(t)$, prescribed time $\mathcal{T}$ is known a priori before controller design.

Function $h(t)$ exhibits the properties that $\lim\limits_{t\to\mathcal{T}} h(t) = \iota$ and $h(t) = \iota, \forall\, t \ge \mathcal{T}$. Define $\underline{h}(t) = \pi_1 h(t), \bar{h}(t) = \pi_2 h(t)$ with constants $\pi_1, \pi_2 > 0$. According to (11), if $z_{i,1}$ is bounded, $e_i = -\underline{h}(t)$ and $e_i = \bar{h}(t)$ will not occur. Clearly, if $-\underline{h}(0) < e_i(0) < \bar{h}(0)$, then $-\underline{h}(t) < e_i < \bar{h}(t)$ will always hold. Thus, from $h(t)$ in (15), it follows that distributed consensus errors $e_i, i = 1, 2, \ldots, N$ will converge to prescribed interval $(-\pi_1\iota, \pi_2\iota)$ in prescribed time $\mathcal{T}$. Then, based on the above analysis, the following design is to ensure the boundedness of error $z_{i,1}$.

To compensate saturation nonlinearity, an auxiliary system is designed to generate compensated signals:

$$\begin{aligned} \dot{\xi}_{i,k} &= \xi_{i,k+1} - p_{i,k}\xi_{i,k}, k = 1, 2, \ldots, n-1, \\ \dot{\xi}_{i,n} &= \Delta u_i - p_{i,n}\xi_{i,n}, \end{aligned} \tag{16}$$

where $\xi_i = [\xi_{i,1}, \xi_{i,2}, \ldots, \xi_{i,n}]^T$ is the state of auxiliary system; $\Delta u_i = u_i(v_i) - v_i$; $p_{i,1} > \frac{1}{2}$, $p_{i,k} > 1, k = 2, 3, \ldots, n$ are design parameters.

Remark 6: Saturated input is unavoidable and its presence may destroy the stability of controlled systems. It should be pointed out that auxiliary system (16) is designed to compensate the effect.

Thus, according to (11)-(12) and (16), compensated error is defined as

$$Z_{i,k} = z_{i,k} - \xi_{i,k}, k = 1, 2, \ldots, n. \tag{17}$$

B. Controller Design

The proposed prescribed-time connectivity-preserving consensus control strategy is presented as follows.

In the first place, virtual controllers are designed as

$$\begin{aligned} \alpha_{i,1} =& -c_{i,1}Z_{i,1}\big(\Upsilon_i\varpi_i\big)^{-1} - \frac{3}{2}Z_{i,1}\big(\Upsilon_i\varpi_i\big)^{1/3} \\ & - \big(\Upsilon_i\varpi_i\big)^{-1}\Big(\Pi_i + \hat{W}_{i,1}^T\Phi_{i,1}(\chi_{i,1}, \hat{\theta}_{i,1}^T\phi_{i,1}(t)) \\ & + \frac{Z_{i,1}^3\hat{M}_{i,1}^2\daleth_{i,1}^2(t)}{|Z_{i,1}^3||\hat{M}_{i,1}\daleth_{i,1}(t)+\kappa}\Big), \end{aligned} \tag{18}$$

$$\begin{aligned} \alpha_{i,k} =& -(c_{i,k} + \frac{3}{2} + \frac{1}{4})Z_{i,k} - \hat{W}_{i,k}^T\Phi_{i,k}(\chi_{i,k}, \hat{\theta}_{i,k}^T\phi_{i,k}(t)) \\ & - \frac{Z_{i,k}^3\hat{M}_{i,k}^2\daleth_{i,k}^2(t)}{|Z_{i,k}^3||\hat{M}_{i,k}\daleth_{i,k}(t)+\kappa}, k = 2, 3, \ldots, n-1, \end{aligned} \tag{19}$$

and then controller v_i is designed as

$$\begin{aligned} v_i =& -c_{i,n}Z_{i,n} - \frac{1}{4}Z_{i,n} - \hat{W}_{i,n}^T\Phi_{i,n}(\chi_{i,n}, \hat{\theta}_{i,n}^T\phi_{i,n}(t)) \\ & - \frac{Z_{i,n}^3\hat{M}_{i,n}^2\daleth_{i,n}^2(t)}{|Z_{i,n}^3||\hat{M}_{i,n}\daleth_{i,n}(t)+\kappa}, \end{aligned} \tag{20}$$

where $\Pi_i = \frac{\bar{h}(t)e_i^2}{(\underline{h}(t)+e_i)^2(\bar{h}(t)-e_i)}\dot{\underline{h}}(t) + \frac{-\underline{h}(t)e_i^2}{(\underline{h}(t)+e_i)(\bar{h}(t)-e_i)^2}\dot{\bar{h}}(t)$; $\Upsilon_i = \frac{\underline{h}(t)\bar{h}(t)\big(\underline{h}(t)\bar{h}(t)+e_i^2\big)}{(\underline{h}(t)+e_i)^2(\bar{h}(t)-e_i)^2}$; $\varpi_i = \sum_{j=0}^N a_{ij}\frac{2R_j}{R_j^2-(y_i-y_j)^2}$; for $k = 1, 2, \ldots, n$, $c_{i,k} > 0$ are control gains; $\hat{W}_{i,k}^T\Phi_{i,k}(\chi_{i,k}, \hat{\theta}_{i,k}^T\phi_{i,k}(t))$ are the outputs of the function approximator to compensate unknown nonlinearities, which will be provided later; $\chi_{i,k}$ are related to the system states and errors, which will be defined in the following substance; adaptive robust terms $\frac{Z_{i,k}^3\hat{M}_{i,k}^2\daleth_{i,k}^2(t)}{|Z_{i,k}^3||\hat{M}_{i,k}\daleth_{i,k}(t)+\kappa}$ are designed to suppress the approximator errors in each step of backstepping recursively design process; $\hat{W}_{i,k}, \hat{\theta}_{i,k}$ and $\hat{M}_{i,k}$ are the estimates of unknown vectors $W_{i,k}, \theta_{i,k}$ and unknown constants $M_{i,k}$, respectively, which are reparametrized from models (8) and (10); $\daleth_{i,k}$ are known functions.

Besides, for $k = 1, 2, \ldots, n$, the estimates are updated by adaptive laws

$$\dot{\hat{W}}_{i,k} = \gamma_{i,k}Z_{i,k}^3(\hat{\Phi}_{i,k} - \hat{\Phi}'_{i,k}\hat{\theta}_{i,k}^T\phi_{i,k}(t)) - \rho_{W_{i,k}}\hat{W}_{i,k}, \tag{21}$$

$$\dot{\hat{\theta}}_{i,k} = \upsilon_{i,k}Z_{i,k}^3\hat{W}_{i,k}^T\hat{\Phi}'_{i,k}\phi_{i,k}(t) - \rho_{\theta_{i,k}}\hat{\theta}_{i,k}, \tag{22}$$

$$\dot{\hat{M}}_{i,k} = \varsigma_{i,k}|Z_{i,k}^3|\daleth_{i,k}(t) - \rho_{M_{i,k}}\hat{M}_{i,k}, \tag{23}$$

where $\gamma_{i,k}, \upsilon_{i,k}, \varsigma_{i,k}, \rho_{W_{i,k}}, \rho_{\theta_{i,k}}, \rho_{M_{i,k}} > 0$ are design parameters.

Remark 7: To improved the clarity of the controller design procedure, a block diagram of the proposed prescribed-time connectivity-preserving consensus control algorithm for the ith follower is provided in Fig. 1.

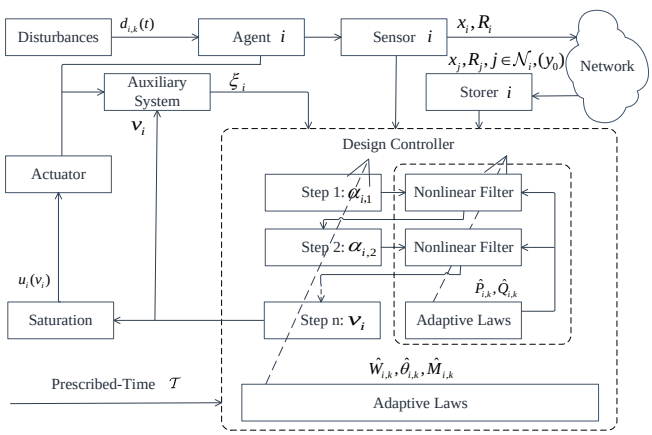

Fig. 1. Block diagram for the controlled systems.

C. Stability Analysis

Theorem 1: Under Assumption 1, consider the closed-loop stochastic nonstrict-feedback switched MASs composed of followers (8), virtual leader (10), virtual controllers (18) and (19), designed controller (20) and adaptive laws (21)-(23). The control objective in section II is achieved.

Proof: The controller design process is divided into the following steps.

Step 1. By referring to error signal $z_{i,1}$ in (11) and distributed consensus error e_i in (13), the $It\hat{o}$ differential [3] of $Z_{i,1}$ is derived as

$$\begin{aligned}\mathrm{d}Z_{i,1} &= \mathrm{d}z_{i,1} - \mathrm{d}\xi_{i,1}\\ &= \frac{\mathrm{d}\big[\underline{h}(t)\bar{h}(t)e_i\big](\underline{h}(t)+e_i)(\bar{h}(t)-e_i)}{\Big((\underline{h}(t)+e_i)(\bar{h}(t)-e_i)\Big)^2}\\ &\quad - \frac{\underline{h}(t)\bar{h}(t)e_i\mathrm{d}\big[(\underline{h}(t)+e_i)(\bar{h}(t)-e_i)\big]}{\Big((\underline{h}(t)+e_i)(\bar{h}(t)-e_i)\Big)^2}\\ &\quad - (\xi_{i,2} - p_{i,1}\xi_{i,1})\mathrm{d}t\\ &= \Pi_i\mathrm{d}t + \Upsilon_i\mathrm{d}e_i - (\xi_{i,2} - p_{i,1}\xi_{i,1})\mathrm{d}t, \end{aligned} \tag{24}$$

where

$$\begin{aligned}\mathrm{d}e_i =& \Big[\varpi_i\big(x_{i,2} + f_{i,1}^{\sigma_i(t)}(x_i, d_{i,1}(t))\big)\\ &- \sum_{j=1}^{N} a_{ij}\frac{2R_j}{R_j^2-(y_i-y_j)^2}\big(x_{j,2} + f_{j,1}^{\sigma_j(t)}(x_j, d_{j,1}(t))\big)\\ &- a_{i,0}\frac{2R_0}{R_0^2-(y_i-y_0)^2}\dot{y}_0\Big]\mathrm{d}t + G_{i,1}\mathrm{d}w, \end{aligned} \tag{25}$$

$$\begin{aligned}G_{i,1} =& \varpi_i g_{i,1}^{\sigma_i(t)}(x_i, d_{i,1}(t))\\ &- \sum_{j=1}^{N} a_{ij}\frac{2R_j}{R_j^2-(y_i-y_j)^2} g_{j,1}^{\sigma_j(t)}(x_j, d_{j,1}(t)). \end{aligned} \tag{26}$$

Construct candidate Lyapunov function

$$V_{i,1} = \frac{1}{4}Z_{i,1}^4. \tag{27}$$

With $x_{i,2} = Z_{i,2} + \xi_{i,2} + \zeta_{i,1} + \alpha_{i,1}$, the infinitesimal generator of $V_{i,1}$ satisfies

$$\begin{aligned}\mathcal{L}V_{i,1} =& Z_{i,1}^3\Bigg(\Pi_i + \Upsilon_i\Big(\varpi_i\big(Z_{i,2} + \xi_{i,2} + \zeta_{i,1} + \alpha_{i,1}\\ &+ f_{i,1}^{\sigma_i(t)}(x_i, d_{i,1}(t))\big) - a_{i,0}\frac{2R_0}{R_0^2-(y_i-y_0)^2}\dot{y}_0\\ &- \sum_{j=1}^{N} a_{ij}\frac{2R_j}{R_j^2-(y_i-y_j)^2}\big(x_{j,2} + f_{j,1}^{\sigma_j(t)}(x_j, d_{j,1}(t))\big)\Big)\\ &- \xi_{i,2} + p_{i,1}\xi_{i,1}\Bigg) + \frac{3}{2}Z_{i,1}^2(\Upsilon_i G_{i,1})^T(\Upsilon_i G_{i,1}). \end{aligned} \tag{28}$$

Applying the Young's inequality [14] yields

$$Z_{i,1}^3\Upsilon_i\varpi_i Z_{i,2} \le \frac{3}{4}Z_{i,1}^4(\Upsilon_i\varpi_i)^{4/3} + \frac{1}{4}Z_{i,2}^4, \tag{29}$$

$$Z_{i,1}^3\Upsilon_i\varpi_i\zeta_{i,1} \le \frac{3}{4}Z_{i,1}^4(\Upsilon_i\varpi_i)^{4/3} + \frac{1}{4}\zeta_{i,1}^4, \tag{30}$$

$$\frac{3}{2}Z_{i,1}^2(\Upsilon_i G_{i,1})^T(\Upsilon_i G_{i,1}) \le \frac{3}{4\varrho}Z_{i,1}^4||\Upsilon_i G_{i,1}||^4 + \frac{3}{4}\varrho, \tag{31}$$

where $\varrho > 0$ is a constant. Thus, it follows that

$$\begin{aligned}\mathcal{L}V_{i,1} \le& Z_{i,1}^3\Big(\Pi_i + \frac{3}{2}Z_{i,1}(\Upsilon_i\varpi_i)^{4/3} + \Upsilon_i\varpi_i\alpha_{i,1}\\ &+ F_{i,1}(X_{i,1}, \vartheta_{i,1})\Big) + \frac{1}{4}Z_{i,2}^4 + \frac{1}{4}\zeta_{i,1}^4 + \frac{3}{4}\varrho, \end{aligned} \tag{32}$$

where $F_{i,1}(X_{i,1}, \vartheta_{i,1}) = \Upsilon_i\varpi_i\xi_{i,2} + \Upsilon_i\varpi_i f_{i,1}^{\sigma_i(t)}(x_i, d_{i,1}(t)) - \Upsilon_i\sum_{j=1}^{N} a_{ij}\frac{2R_j}{R_j^2-(y_i-y_j)^2}\big(x_{j,2} + f_{j,1}^{\sigma_j(t)}(x_j, d_{j,1}(t)) - \xi_{i,2} - \Upsilon_i a_{i,0}\frac{2R_0}{R_0^2-(y_i-y_0)^2}\dot{y}_0 + p_{i,1}\xi_{i,1} + \frac{3}{4\varrho}Z_{i,1}||\Upsilon_i G_{i,1}||^4$ is an unknown and periodically disturbed function with $X_{i,1} = [x_i, x_j, y_0, \underline{h}(t), \bar{h}(t), \xi_{i,1}, \xi_{i,2}]^T, \vartheta_{i,1}(t) = [d_{i,1}(t), d_{j,1}(t)]^T$. Similar to [33], for all switching modes $l_i \in \beth_i, l_j \in \beth_j$, there exists a continuous function $\digamma_{i,1}(X_{i,1}, \vartheta_{i,1}, \mu_{i,1})$ such that

$$Z_{i,1}^3 F_{i,1}(X_{i,1}, \vartheta_{i,1}) \le Z_{i,1}^3\digamma_{i,1}(X_{i,1}, \vartheta_{i,1}, \mu_{i,1}) + \nu_{i,1}, \tag{33}$$

where $\mu_{i,1}, \nu_{i,1} > 0$ are design parameters.

FLS cannot be applied to approximate $\digamma_{i,1}(X_{i,1}, \vartheta_{i,1}, \mu_{i,1})$ directly due to the existence of unmeasured periodic disturbance $\vartheta(t)$. In view of (6) and RFLS [29], one obtains

$$\begin{aligned}\digamma_{i,1}(X_{i,1}, \vartheta_{i,1}, \mu_{i,1}) =& W_{i,1}^T\Phi_{i,1}(\chi_{i,1}, \theta_{i,1}^T\phi_{i,1}(t))\\ &+ \omega_{i,1}(X_{i,1}, t, \mu_{i,1}), \end{aligned} \tag{34}$$

where $\chi_{i,1} = [x_{i,1}, x_{j,1}, y_0, \underline{h}(t), \bar{h}(t), \mu_{i,1}]^T$.

Remark 8: From (33), variable $X_{i,1}$ is related to all the states of ith follower. According to the design principle of adaptive backstepping, if FLS is directly used, the problem of algebraic loop will occur. To overcome the restriction that conventional adaptive backstepping design is only applicable to lower triangular systems, variable $X_{i,1}$ is changed to $\chi_{i,1}$ by means of RFLS approximator. Then, adaptive backstepping design can work normally for non-triangular systems.

From Lemma 1, it yields

$$\begin{aligned}&Z_{i,1}^3F_{i,1}(X_{i,1},\vartheta_{i,1})\\&\leq \nu_{i,1}+Z_{i,1}^3\Big(\hat{W}_{i,1}^T\Phi_{i,1}(\chi_{i,1},\hat{\theta}_{i,1}^T\phi_{i,1}(t))\\&\quad+\tilde{W}_{i,1}^T(\hat{\Phi}_{i,1}-\hat{\Phi}_{i,1}'\hat{\theta}_{i,1}^T\phi_{i,1}(t))+\hat{W}_{i,1}^T\hat{\Phi}_{i,1}'\tilde{\theta}_{i,1}^T\phi_{i,1}(t)\Big)\\&\quad+\kappa+\frac{Z_{i,1}^6\hat{M}_{i,1}^2\daleth_{i,1}^2(t)}{|Z_{i,1}^3||\hat{M}_{i,1}\daleth_{i,1}(t)+\kappa}+|Z_{i,1}^3|\tilde{M}_{i,1}\daleth_{i,1}(t),\end{aligned}\tag{35}$$

where $M_{i,1}=\sqrt{\|\theta_{i,1}\|^2+\|W_{i,1}\|^2+(|W_{i,1}|_1+\bar{\omega}_{i,1})^2}$; $\daleth_{i,1}(t)=\sqrt{\|\phi_{i,1}(t)\hat{W}_{i,1}^T\hat{\Phi}_{i,1}'\|^2+\|\hat{\Phi}_{i,1}'\hat{\theta}_{i,1}^T\phi_{i,1}(t)\|^2+1}$; $\kappa>0$ is a constant. By taking (35) into account, Ineq. (32) becomes

$$\begin{aligned}\mathcal{L}V_{i,1}\leq& Z_{i,1}^3\Big(\Pi_i+\frac{3}{2}Z_{i,1}(\Upsilon_i\varpi_i)^{4/3}+\Upsilon_i\varpi_i\alpha_{i,1}\\&+\hat{W}_{i,1}^T\Phi_{i,1}(\chi_{i,1},\hat{\theta}_{i,1}^T\phi_{i,1}(t))\\&+\frac{Z_{i,1}^3\hat{M}_{i,1}^2\daleth_{i,1}^2(t)}{|Z_{i,1}^3||\hat{M}_{i,1}\daleth_{i,1}(t)+\kappa}\Big)\\&+Z_{i,1}^3\Big(\tilde{W}_{i,1}^T(\hat{\Phi}_{i,1}-\hat{\Phi}_{i,1}'\hat{\theta}_{i,1}^T\phi_{i,1}(t))\\&+\hat{W}_{i,1}^T\hat{\Phi}_{i,1}'\tilde{\theta}_{i,1}^T\phi_{i,1}(t)\Big)+|Z_{i,1}^3|\tilde{M}_{i,1}\daleth_{i,1}(t)\\&+\kappa+\nu_{i,1}+\frac{1}{4}Z_{i,2}^4+\frac{1}{4}\zeta_{i,1}^4+\frac{3}{4}\varrho.\end{aligned}\tag{36}$$

By taking virtual controller (18) into account, it holds that

$$\begin{aligned}\mathcal{L}V_{i,1}\leq&-c_{i,1}Z_{i,1}^4+Z_{i,1}^3\Big(\tilde{W}_{i,1}^T(\hat{\Phi}_{i,1}-\hat{\Phi}_{i,1}'\hat{\theta}_{i,1}^T\phi_{i,1}(t))\\&+\hat{W}_{i,1}^T\hat{\Phi}_{i,1}'\tilde{\theta}_{i,1}^T\phi_{i,1}(t)\Big)+|Z_{i,1}^3|\tilde{M}_{i,1}\daleth_{i,1}(t)\\&+\kappa+\nu_{i,1}+\frac{1}{4}Z_{i,2}^4+\frac{1}{4}\zeta_{i,1}^4+\frac{3}{4}\varrho.\end{aligned}\tag{37}$$

Step k ($k=2,3,\ldots,n-1$). The stochastic differential of $Z_{i,k}$ in (17) satisfies

$$\begin{aligned}\mathrm{d}Z_{i,k}=&\mathrm{d}x_{i,k}-\mathrm{d}\bar{\alpha}_{i,k-1}-\mathrm{d}\xi_{i,k}\\=&[x_{i,k+1}+f_{i,k}^{\sigma_i(t)}(x_i,d_{i,k}(t))-\dot{\bar{\alpha}}_{i,k-1}\\&-\xi_{i,k+1}+p_{i,k}\xi_{i,k}]\mathrm{d}t+G_{i,k}\mathrm{d}w,\end{aligned}\tag{38}$$

where $G_{i,k}=g_{i,k}^{\sigma_i(t)}(x_i,d_{i,k}(t))$. The candidated Lyapunov function is constructed as

$$V_{i,k}=\frac{1}{4}Z_{i,k}^4.\tag{39}$$

In view of $It\hat{o}$ formula, it follows that

$$\begin{aligned}\mathcal{L}V_{i,k}=&Z_{i,k}^3\Big(Z_{i,k+1}+\zeta_{i,k}+\alpha_{i,k}+f_{i,k}^{\sigma_i(t)}(x_i,d_{i,k}(t))\\&-\dot{\bar{\alpha}}_{i,k-1}+p_{i,k}\xi_{i,k}\Big)+\frac{3}{2}Z_{i,k}^2G_{i,k}^TG_{i,k}.\end{aligned}\tag{40}$$

By using the Young's inequality for $Z_{i,k}^3Z_{i,k+1}$, $Z_{i,k}^3\zeta_{i,k}$, $\frac{3}{2}Z_{i,k}^2G_{i,k}^TG_{i,k}$, it yields

$$\begin{aligned}\mathcal{L}V_{i,k}\leq&Z_{i,k}^3\Big(\frac{3}{2}Z_{i,k}+\alpha_{i,k}+F_{i,k}(X_{i,k},\vartheta_{i,k})\Big)\\&+\frac{1}{4}Z_{i,k+1}^4+\frac{1}{4}\zeta_{i,k}^4+\frac{3}{4}\varrho,\end{aligned}\tag{41}$$

where $F_{i,k}(X_{i,k},\vartheta_{i,k})=\frac{3}{4\varrho}Z_{i,k}||G_{i,k}||^4+f_{i,k}^{\sigma_i(t)}(x_i,d_{i,k}(t))-\dot{\bar{\alpha}}_{i,k-1}+p_{i,k}\xi_{i,k}$ with $X_{i,k}=[x_i,\dot{\bar{\alpha}}_{i,k-1},\xi_{i,k}]^T,\vartheta_{i,k}(t)=d_{i,k}(t)$. For all switching modes $l_i\in\beth_i$, there exists a continuous function $\digamma_{i,k}(X_{i,k},\vartheta_{i,k},\mu_{i,k})$ such that

$$Z_{i,k}^3F_{i,k}(X_{i,k},\vartheta_{i,k})\leq Z_{i,k}^3\digamma_{i,k}(X_{i,k},\vartheta_{i,k},\mu_{i,k})+\nu_{i,k},\tag{42}$$

where $\mu_{i,k},\nu_{i,k}>0$ are constants. Function $\digamma_{i,k}(X_{i,k},\vartheta_{i,k},\mu_{i,k})$ can be approximated by FSE and RFLS as

$$\begin{aligned}\digamma_{i,k}(X_{i,k},\vartheta_{i,k},\mu_{i,k})=&W_{i,k}^T\Phi_{i,k}(\chi_{i,k},\theta_{i,k}^T\phi_{i,k}(t))\\&+\omega_{i,k}(X_{i,k},t,\mu_{i,k}),\end{aligned}\tag{43}$$

where $\chi_{i,k}=[\bar{x}_{i,k},\mu_{i,k}]^T,\bar{x}_{i,k}=[x_{i,1},x_{i,2},\ldots,x_{i,k}]^T$. Similar to the process in (35), it yields

$$\begin{aligned}&Z_{i,k}^3F_{i,k}(X_{i,k},\vartheta_{i,k})\\&\leq \nu_{i,k}+Z_{i,k}^3\Big(\hat{W}_{i,k}^T\Phi_{i,k}(\chi_{i,k},\hat{\theta}_{i,k}^T\phi_{i,k}(t))\\&\quad+\tilde{W}_{i,k}^T(\hat{\Phi}_{i,k}-\hat{\Phi}_{i,k}'\hat{\theta}_{i,k}^T\phi_{i,k}(t))+\hat{W}_{i,k}^T\hat{\Phi}_{i,k}'\tilde{\theta}_{i,k}^T\phi_{i,k}(t)\Big)\\&\quad+\kappa+\frac{Z_{i,k}^6\hat{M}_{i,k}^2\daleth_{i,k}^2(t)}{|Z_{i,k}^3||\hat{M}_{i,k}\daleth_{i,k}(t)+\kappa}+|Z_{i,k}^3|\tilde{M}_{i,k}\daleth_{i,k}(t),\end{aligned}\tag{44}$$

where $M_{i,k}=\sqrt{\|\theta_{i,k}\|^2+\|W_{i,k}\|^2+(|W_{i,k}|_1+\bar{\omega}_{i,k})^2}$; $\daleth_{i,k}(t)=\sqrt{\|\phi_{i,k}(t)\hat{W}_{i,k}^T\hat{\Phi}_{i,k}'\|^2+\|\hat{\Phi}_{i,k}'\hat{\theta}_{i,k}^T\phi_{i,k}(t)\|^2+1}$.

By substituting (44) into (41), it holds that

$$\begin{aligned}\mathcal{L}V_{i,k}\leq&-(c_{i,k}+\frac{1}{4})Z_{i,k}^4\\&+Z_{i,k}^3\Big(\tilde{W}_{i,k}^T(\hat{\Phi}_{i,k}-\hat{\Phi}_{i,k}'\hat{\theta}_{i,k}^T\phi_{i,k}(t))\\&+\hat{W}_{i,k}^T\hat{\Phi}_{i,k}'\tilde{\theta}_{i,k}^T\phi_{i,k}(t)\Big)+|Z_{i,k}^3|\tilde{M}_{i,k}\daleth_{i,k}(t)\\&+\frac{1}{4}Z_{i,k+1}^4+\frac{1}{4}\zeta_{i,k}^4+\frac{3}{4}\varrho+\kappa+\nu_{i,k}.\end{aligned}\tag{45}$$

Step n. The infinitesimal generator of $Z_{i,n}$ is

$$\begin{aligned}\mathrm{d}Z_{i,n}=&[f_{i,n}^{\sigma_i(t)}(x_i,d_{i,n}(t))-\dot{\bar{\alpha}}_{i,n-1}\\&+v_i+p_{i,n}\xi_{i,n}]\mathrm{d}t+G_{i,n}\mathrm{d}w,\end{aligned}\tag{46}$$

where $G_{i,n}=g_{i,n}^{\sigma_i(t)}(x_i,d_{i,n}(t))$. Consider Lyapunov function

$$V_{i,n}=\frac{1}{4}Z_{i,n}^4.\tag{47}$$

By utilizing the Young's inequality for $\frac{3}{2}Z_{i,n}^2G_{i,n}^TG_{i,n}$, it holds that

$$\mathcal{L}V_{i,n}\leq Z_{i,n}^3\Big(v_i+F_{i,n}(X_{i,n},\vartheta_{i,n})\Big)+\frac{3}{4}\varrho,\tag{48}$$

where $F_{i,n}(X_{i,n},\vartheta_{i,n})=-\dot{\bar{\alpha}}_{i,n-1}\frac{3}{4\varrho}Z_{i,n}||G_{i,n}||^4+p_{i,n}\xi_{i,n}+f_{i,n}^{\sigma_i(t)}(x_i,d_{i,n}(t))$ with $X_{i,n}=[x_i,\dot{\bar{\alpha}}_{i,n-1},\xi_{i,n}]^T,\vartheta_{i,1}(t)=$

$d_{i,n}(t)$. Then

$$\begin{aligned}
&Z_{i,n}^3 F_{i,n}(X_{i,n},\vartheta_{i,n})\\
&\le Z_{i,n}^3\Big(\hat{W}_{i,n}^T\Phi_{i,n}(\chi_{i,n},\hat{\theta}_{i,n}^T\phi_{i,n}(t))\\
&\quad+\frac{Z_{i,n}^3\hat{M}_{i,n}^2\daleth_{i,n}^2(t)}{|Z_{i,n}^3||\hat{M}_{i,n}\daleth_{i,n}(t)+\kappa}\Big)\\
&\quad+Z_{i,n}^3\Big(\tilde{W}_{i,n}^T(\hat{\Phi}_{i,n}-\hat{\Phi}_{i,n}'\hat{\theta}_{i,n}^T\phi_{i,n}(t))\\
&\quad+\hat{W}_{i,n}^T\hat{\Phi}_{i,n}'\tilde{\theta}_{i,n}^T\phi_{i,n}(t)\Big)\\
&\quad+|Z_{i,n}^3|\tilde{M}_{i,n}\daleth_{i,n}(t)+\nu_{i,n}+\kappa,
\end{aligned}\tag{49}$$

where $\mu_{i,n},\nu_{i,n}>0$ are design parameters; $\chi_{i,n}=[x_i,\mu_{i,n}]^T$; $M_{i,n}=\sqrt{\|\theta_{i,n}\|^2+\|W_{i,n}\|^2+(|W_{i,n}|_1+\bar{\omega}_{i,n})^2}$; $\daleth_{i,n}(t)=\sqrt{\|\phi_{i,n}(t)\hat{W}_{i,n}^T\hat{\Phi}_{i,n}'\|^2+\|\hat{\Phi}_{i,n}'\hat{\theta}_{i,n}^T\phi_{i,n}(t)\|^2+1}$.

Further, by substituting (49) into (48), it yields

$$\begin{aligned}
\mathcal{L}V_{i,n}\le{}& Z_{i,n}^3\Big(v_i+\hat{W}_{i,n}^T\Phi_{i,n}(\chi_{i,n},\hat{\theta}_{i,n}^T\phi_{i,n}(t))\\
&+\frac{Z_{i,n}^3\hat{M}_{i,n}^2\daleth_{i,n}^2(t)}{|Z_{i,n}^3||\hat{M}_{i,n}\daleth_{i,n}(t)+\kappa}\Big)\\
&+Z_{i,n}^3\Big(\tilde{W}_{i,n}^T(\hat{\Phi}_{i,n}-\hat{\Phi}_{i,n}'\hat{\theta}_{i,n}^T\phi_{i,n}(t))\\
&+\hat{W}_{i,n}^T\hat{\Phi}_{i,n}'\tilde{\theta}_{i,n}^T\phi_{i,n}(t)\Big)\\
&+|Z_{i,n}^3|\tilde{M}_{i,n}\daleth_{i,n}(t)+\nu_{i,n}+\kappa+\frac{3}{4}\varrho.
\end{aligned}\tag{50}$$

In view of designed controller v_i, it holds that

$$\begin{aligned}
\mathcal{L}V_{i,n}\le{}&-(c_{i,n}+\frac{1}{4})Z_{i,n}^4\\
&+Z_{i,n}^3\Big(\tilde{W}_{i,n}^T(\hat{\Phi}_{i,n}-\hat{\Phi}_{i,n}'\hat{\theta}_{i,n}^T\phi_{i,n}(t))\\
&+\hat{W}_{i,n}^T\hat{\Phi}_{i,n}'\tilde{\theta}_{i,n}^T\phi_{i,n}(t)\Big)+|Z_{i,n}^3|\tilde{M}_{i,n}\daleth_{i,n}(t)\\
&+\nu_{i,n}+\kappa+\frac{3}{4}\varrho.
\end{aligned}\tag{51}$$

Consider overall Lyapunov function

$$\begin{aligned}
V_i={}&\sum_{k=1}^n V_{i,k}+\sum_{k=1}^n\bar{V}_{i,k}+\sum_{k=1}^{n-1}\frac{1}{4}\zeta_{i,k}^4\\
&+\sum_{k=1}^{n-1}\Big(\frac{1}{2\eta_{i,k}}\tilde{P}_{i,k}^2+\frac{1}{2\lambda_{i,k}}\tilde{Q}_{i,k}^2\Big),
\end{aligned}\tag{52}$$

where $\bar{V}_{i,k}=\frac{1}{2\gamma_{i,k}}\tilde{W}_{i,k}^T\tilde{W}_{i,k}+\frac{1}{2\upsilon_{i,k}}\tilde{\theta}_{i,k}^T\tilde{\theta}_{i,k}+\frac{1}{2\varsigma_{i,k}}\tilde{M}_{i,k}^2$, $\tilde{M}_{i,1}=M_{i,1}-\hat{M}_{i,1}$; $\eta_{i,k},\lambda_{i,k}>0$ are constants.

Differentiating boundary layer error $\zeta_{i,k}$ yields

$$\begin{aligned}
\mathrm{d}\zeta_{i,k}={}&\Big[-\frac{\zeta_{i,k}}{\tau_{i,k}}-\frac{\zeta_{i,k}^3\hat{P}_{i,k}^2}{|\zeta_{i,k}^3|\hat{P}_{i,k}+\kappa}\\
&-\frac{3}{2}\frac{\zeta_{i,k}\hat{Q}_{i,k}^2}{\zeta_{i,k}^2\hat{Q}_{i,k}+\kappa}+\varkappa_{i,k}\Big]\mathrm{d}t+\aleph_{i,k}\mathrm{d}w,
\end{aligned}\tag{53}$$

where $\varkappa_{i,1}=-\frac{\partial\alpha_{i,1}}{\partial x_{i,1}}(x_{i,2}+f_{i,1}^{\sigma_i(t)}(x_i,d_{i,1}(t)))-\frac{\partial\alpha_{i,1}}{\partial y_0}\dot{y}_0-\frac{\partial\alpha_{i,1}}{\partial\underline{h}(t)}\dot{\underline{h}}(t)-\frac{\partial\alpha_{i,1}}{\partial\bar{h}(t)}\dot{\bar{h}}(t)-\frac{\partial\alpha_{i,1}}{\partial\hat{W}_{i,1}}\dot{\hat{W}}_{i,1}-\frac{\partial\alpha_{i,1}}{\partial\hat{\Theta}_{i,1}}\dot{\hat{\Theta}}_{i,1}-\frac{\partial\alpha_{i,1}}{\partial\hat{M}_{i,1}}\dot{\hat{M}}_{i,1}-\sum_{j\in\{\mathcal{N}_i-0\}}\frac{\partial\alpha_{i,1}}{\partial x_{j,1}}(x_{j,2}+f_{j,1}^{\sigma_j(t)}(x_j,d_{j,1}(t)))$, $\aleph_{i,1}=-\frac{\partial\alpha_{i,1}}{\partial x_{i,1}}g_{i,1}^{\sigma_i(t)}(x_i,d_{i,1}(t))-\sum_{j\in\{\mathcal{N}_i-0\}}\frac{\partial\alpha_{i,1}}{\partial x_{j,1}}g_{j,1}^{\sigma_j(t)}(x_j,d_{j,1}(t))$; for $k=2,3,\ldots,n-1$, $\varkappa_{i,k}=-\sum_{l=1}^k\frac{\partial\alpha_{i,k}}{\partial x_{i,l}}(x_{i,l+1}+f_{i,l}^{\sigma_i(t)}(x_i,d_{i,l}(t)))-\frac{\partial\alpha_{i,k}}{\partial\hat{W}_{i,k}}\dot{\hat{W}}_{i,k}-\frac{\partial\alpha_{i,k}}{\partial\hat{\Theta}_{i,k}}\dot{\hat{\Theta}}_{i,k}-\frac{\partial\alpha_{i,k}}{\partial\hat{M}_{i,k}}\dot{\hat{M}}_{i,k}$, $\aleph_{i,k}=-\sum_{l=1}^k\frac{\partial\alpha_{i,k}}{\partial x_{i,l}}g_{i,l}^{\sigma_i(t)}(x_i,d_{i,l}(t))$.

In view of (53), one has

$$\begin{aligned}
\mathcal{L}V_i={}&\sum_{k=1}^n\mathcal{L}V_{i,k}+\sum_{k=1}^{n-1}\Big(\zeta_{i,k}^3\big(-\frac{\zeta_{i,k}}{\tau_{i,k}}-\frac{\zeta_{i,k}^3\hat{P}_{i,k}^2}{|\zeta_{i,k}^3|\hat{P}_{i,k}+\kappa}\\
&-\frac{3}{2}\frac{\zeta_{i,k}\hat{Q}_{i,k}^2}{\zeta_{i,k}^2\hat{Q}_{i,k}+\kappa}+\varkappa_{i,k}\big)+\frac{3}{2}\zeta_{i,k}^2\aleph_{i,k}^T\aleph_{i,k}\Big)\\
&-\sum_{k=1}^n\Big(\frac{1}{\gamma_{i,k}}\tilde{W}_{i,k}^T\dot{\hat{W}}_{i,k}+\frac{1}{\upsilon_{i,k}}\tilde{\theta}_{i,k}^T\dot{\hat{\theta}}_{i,k}+\frac{1}{\varsigma_{i,k}}\tilde{M}_{i,k}\dot{\hat{M}}_{i,k}\Big)\\
&-\sum_{k=1}^{n-1}\Big(\frac{1}{\eta_{i,k}}\tilde{P}_{i,k}\dot{\hat{P}}_{i,k}+\frac{1}{\lambda_{i,k}}\tilde{Q}_{i,k}\dot{\hat{Q}}_{i,k}\Big).
\end{aligned}\tag{54}$$

Next, we will further analyse the stability of the resulting closed-loop stochastic MASs. Define a compact set $\Omega_{V_i}=\{V_i<\Xi_i\}$ with constant $\Xi_i>0$. As a consequence, there exists an unknown constant $P_{i,k}>0$ such that $|\varkappa_{i,k}|\le P_{i,k}$ on Ω_{V_i}. Meanwhile, $\aleph_{i,k}^T\aleph_{i,k}\le Q_{i,k}$ holds with unknown constant $Q_{i,k}>0$. Then, it yields

$$\zeta_{i,k}^3\varkappa_{i,k}\le\frac{\zeta_{i,k}^6\hat{P}_{i,k}^2}{|\zeta_{i,k}^3|\hat{P}_{i,k}+\kappa}+\kappa+|\zeta_{i,k}^3|\tilde{P}_{i,k},\tag{55}$$

$$\frac{3}{2}\zeta_{i,k}^2\aleph_{i,k}^T\aleph_{i,k}\le\frac{3}{2}\frac{\zeta_{i,k}^4\hat{Q}_{i,k}^2}{\zeta_{i,k}^2\hat{Q}_{i,k}+\kappa}+\frac{3}{2}\kappa+\frac{3}{2}\zeta_{i,k}^2\tilde{Q}_{i,k}.\tag{56}$$

According to (54) and (55)-(56), $\dot{\hat{P}}_{i,k},\dot{\hat{Q}}_{i,k}$ are designed

$$\dot{\hat{P}}_{i,k}=\eta_{i,k}|\zeta_{i,k}^3|-\rho_{P_{i,k}}\hat{P}_{i,k},\tag{57}$$

$$\dot{\hat{Q}}_{i,k}=\frac{3}{2}\lambda_{i,k}\zeta_{i,k}^2-\rho_{Q_{i,k}}\hat{Q}_{i,k},\tag{58}$$

where $\rho_{P_{i,k}},\rho_{Q_{i,k}}>0$ are design parameters. By substituting (57)-(58), (21)-(23) and $\mathcal{L}V_{i,k},k=1,2,\ldots,n$ into (54), Ineq. (54) can be rewritten as

$$\begin{aligned}
\mathcal{L}V_i\le{}&-\sum_{k=1}^n c_{i,k}Z_{i,k}^4-\sum_{k=1}^{n-1}(\frac{1}{\tau_{i,k}}-\frac{1}{4})\zeta_{i,k}^4\\
&-\sum_{k=1}^n\Big(\frac{\rho_{W_{i,k}}}{2\gamma_{i,k}}\tilde{W}_{i,k}^T\tilde{W}_{i,k}+\frac{\rho_{\theta_{i,k}}}{2\upsilon_{i,k}}\tilde{\theta}_{i,k}^T\tilde{\theta}_{i,k}+\frac{\rho_{M_{i,k}}}{2\varsigma_{i,k}}\tilde{M}_{i,k}^2\Big)\\
&-\sum_{k=1}^{n-1}\Big(\frac{\rho_{P_{i,k}}}{2\eta_{i,k}}\tilde{P}_{ik}^2+\frac{\rho_{Q_{i,k}}}{2\lambda_{i,k}}\tilde{Q}_{ik}^2\Big)+n\kappa+\sum_{k=1}^n\nu_{i,k}+\frac{3}{4}n\varrho\\
&+\sum_{k=1}^n\Big(\frac{\rho_{W_{i,k}}}{2\gamma_{i,k}}W_{i,k}^TW_{i,k}+\frac{\rho_{\theta_{i,k}}}{2\upsilon_{i,k}}\theta_{i,k}^T\theta_{i,k}+\frac{\rho_{M_{i,k}}}{2\varsigma_{i,k}}M_{i,k}^2\Big)\\
&+\sum_{k=1}^{n-1}\Big(\frac{\rho_{P_{i,k}}}{2\eta_{i,k}}P_{i,k}^2+\frac{\rho_{Q_{i,k}}}{2\lambda_{i,k}}Q_{i,k}^2\Big)+\frac{5}{2}\kappa(n-1)\\
\le{}&-\Gamma_iV_i+\Lambda_i,
\end{aligned}\tag{59}$$

where $\Gamma_i=\min\{4c_{i,k},\frac{4-\tau_{i,k}}{\tau_{i,k}},\rho_{W_{i,k}},\rho_{\theta_{i,k}},\rho_{M_{i,k}},\rho_{P_{i,k}},\rho_{Q_{i,k}}\}$; $\Lambda_i=\sum_{k=1}^n\Big(\frac{\rho_{W_{i,k}}}{2\gamma_{i,k}}W_{i,k}^TW_{i,k}+\frac{\rho_{\theta_{i,k}}}{2\upsilon_{i,k}}\theta_{i,k}^T\theta_{i,k}+\frac{\rho_{M_{i,k}}}{2\varsigma_{i,k}}M_{i,k}^2\Big)+$

$\sum_{k=1}^{n-1}\left(\frac{\rho_{P_{i,k}}}{2\eta_{i,k}}P_{i,k}^2+\frac{\rho_{Q_{i,k}}}{2\lambda_{i,k}}Q_{i,k}^2\right)+n\kappa+\sum_{k=1}^{n}\nu_{i,k}+\frac{3}{4}n\varrho+\frac{5}{2}\kappa(n-1)$. Based on (59) and Lemma 4 in [4], one has

$$E[V_i]\leq V_i(0)e^{-\Gamma_i t}+\frac{\Lambda_i}{\Gamma_i},\text{for }\forall\, t>0, \tag{60}$$

where $E(\cdot)$ represents the expectation. Therefore, $E[V_i]$ is finally bounded by $\frac{\Lambda_i}{\Gamma_i}$. It follows that signals $Z_{i,k},\zeta_{i,k},\tilde{W}_{i,k},\tilde{\theta}_{i,k},\tilde{M}_{i,k},\tilde{P}_{i,k}$ and $\tilde{Q}_{i,k}$ are bounded in probability. From the definition of $W_{i,k},\theta_{i,k},M_{i,k},P_{i,k},Q_{i,k}$, signals $\hat{W}_{i,k},\hat{\theta}_{i,k},\hat{M}_{i,k},\hat{P}_{i,k},\hat{Q}_{i,k}$ are bounded. Thus, the proposed controller v_i is bounded. Due to the fact that $z_{i,k}=Z_{i,k}+\xi_{i,k}$, to show the boundedness of $z_{i,k}$, one has to prove that signal $\xi_{i,k}$ is bounded. Therefore, the following contents are provided to demonstrate the boundedness of $\xi_{i,k},k=1,2,\ldots,n$.

The Lyapunov function for auxiliary system (16) is constructed as

$$\mathcal{W}_i=\sum_{k=1}^{n}\frac{1}{2}\xi_{i,k}^2. \tag{61}$$

According to the definition of infinitesimal generator $\mathcal{L}$, $\mathcal{L}\mathcal{W}_i$ is

$$\mathcal{L}\mathcal{W}_i\leq\sum_{k=1}^{n}-\bar{p}_{i,k}\xi_{i,k}^2+\frac{1}{2}\Delta u_i{}^2\leq\delta_i\mathcal{W}_i+\Psi_i, \tag{62}$$

where $\bar{p}_{i,1}=p_{i,1}-\frac{1}{2}>0,\bar{p}_{i,k}=p_{i,k}-1>0$, $k=2,3,\ldots,n$ are constants; $\delta_i=\min\{2\bar{p}_{i,k}\}$, $\Psi_i=\frac{1}{2}\Delta u_i{}^2$.

Based on the boundedness of v_i, it is clear that $\Delta u_i=u_i(v_i)-v_i$ is bounded. Obviously, from Ineq. (62), $\xi_{i,k}$ is bounded, and then $z_{i,k}$ remains bounded. From the boundedness of $z_{i,1}$ and the definition of functions $\underline{h}(t)$ and $\bar{h}(t)$, distributed consensus errors $e_i,i=1,2,\ldots,N$ are bounded and will converge to prescribed interval $(-\pi_1\iota,\pi_2\iota)$ in prescribed time $\mathcal{T}$. Moreover, by adjusting design parameters appropriately, the prescribed interval can be made small enough. Thus, from Remark 4, the prescribed-time connectivity-preserving consensus of stochastic MASs (8)-(10) is achieved. ■

Algorithm 1 Implement the proposed control strategy

Initialize For given MASs, set initial states $x_i(0)$, $y_0(0)$ and $\xi_i(0)$, communication ranges R_i, R_0 and weights a_{ij}, control gains $c_{i,k}$, constants $p_{i,k}$, υ_{M_i}, υ_{m_i}, $\tau_{i,k}$, initial estimates $\hat{W}_{i,k}(0)$, $\hat{\theta}_{i,k}(0)$, $\hat{M}_{i,k}(0)$, $\hat{P}_{i,k}(0)$, $\hat{Q}_{i,k}(0)$, design parameters $\gamma_{i,k}$, $\upsilon_{i,k}$, $\varsigma_{i,k}$, $\eta_{i,k}$, $\lambda_{i,k}$ and $\rho_{W_{i,k}}$, $\rho_{\theta_{i,k}}$, $\rho_{M_{i,k}}$, $\rho_{P_{i,k}}$, $\rho_{Q_{i,k}}$ with $i=1,2,\ldots,N$, $k=1,2,\ldots,n$, $j\in\mathcal{N}_i$. Select constants a, d, ι and κ. Set the number of fuzzy rules and choose the fuzzy membership functions.

```
Repeat
Calculate performance function by (15);
Update the leader by (10);
for i = 1, 2, ..., N do
    for k = 1, 2, ..., n − 1 do
        Define error Z_{i,k} using (17);
        Calculate virtual controller α_{i,k} by (18),(19) and ᾱ_{i,k} by (14);
    end for
    Define error Z_{i,n} using (17);
    Calculate controller v_i and saturation u_i(v_i) by (20) and (9);
    Update followers' dynamics and the estimates by (8) and (21)-(23);
end for
Until the set simulation time
```

Remark 9: There are some results on prescribed-time consensus of MASs. For instance, prescribed-time consensus protocol is presented in [34] for MASs with integrator dynamics.

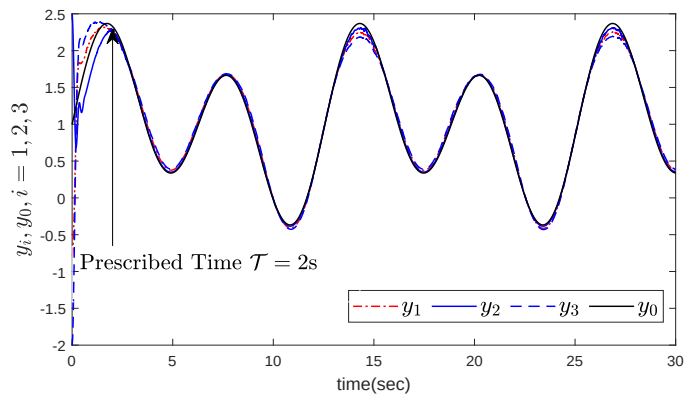

Fig. 3. Prescribed-time consensus under the proposed control strategy.

The authors in [35] and [36], [37] cope with the prescribed-time consensus of second-order nonlinear MASs and high-order ones. These consensus control schemes are derived by using the so-called time base generator principle. The idea of time base generator method is to build the time-varying control gain with a function which is related to the sum of the consensus errors. Despite these progresses, however, it assumes that all the agents should have a common time-reference. This is a strong condition and prohibits its practical applications. Moreover, such gain may becomes singular at the prescribed time, since the gain may go to infinite [38] or produce the Zeno behavior. In contrast to the prescribed-time consensus protocols [34]–[37], the proposed consensus protocol is designed without these restrictions. Thus, the presented work is preferable.

Remark 10: The proposed consensus protocol has the following significant characteristics. Firstly, compared with the settling time obtained via the finite/fixed-time theory, settling time $\mathcal{T}$ has no concern with initialization and control parameters, and it can be known in advance and pre-designed by the designer. Secondly, in the achievements on the finite/fixed-time consensus, the controller design requires tedious fractional calculations. In this paper, we use the regular feedback of errors to take place of fractional power. Thus, the consensus protocol is derived based on the standard Lyapunov stability theory. The complexity of fractional differential calculations is reduced. Thirdly, unlike the existing finite/fixed-time connectivity-preserving works where potential function is adopted to obtain connectivity preservation, error transformation is employed. Besides, novel RFLS approximator is incorporated, which overcomes the algebraic loop problem brought by non-triangular form.

IV. Simulation Example

To show the effectiveness of the proposed consensus protocol, the well-known van der Pol oscillator [10] is considered

$$\begin{aligned}\dot{\psi}_1&=-\psi_2+\psi_1-\frac{1}{3}\psi_1^3+\varphi_1+\mathcal{F}(t),\\ \dot{\psi}_2&=u+0.1(\psi_1+\varphi_3-\varphi_4\psi_2),\\ y&=\psi_1,\end{aligned} \tag{63}$$

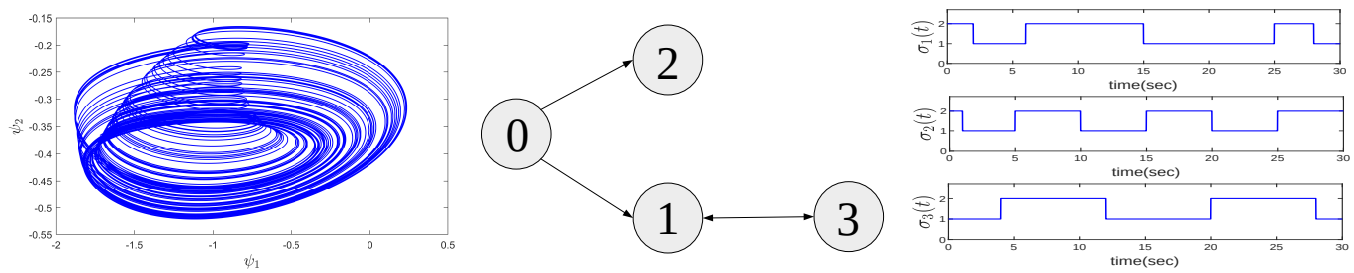

(a) (b) (c)

Fig. 2. (a) Chaotic attractor of van der Pol. (b) Communication graph $\mathcal{G}(0)$. (c) Switching signals.

where $\mathcal{F}(t) = \varphi_2 \cos(\omega t)$ is an exciting signal; $\varphi_1, \varphi_2, \omega, \varphi_3, \varphi_4$ are system parameters. Obviously, exciting signal $\mathcal{F}(t)$ is periodic. Fig. 2(a) depicts the chaotic behavior of system (63) in phase space with controller input $u = 0$ and the same system parameters as the ones given in [15], $\varphi_1 = 0, \varphi_2 = 0.74, \omega = 1, \varphi_3 = 0.7, \varphi_4 = 0.8$.

Here, consider a circumstance that switched nonlinearities and environmental noise exist in (63). Let $x_{i,1} = \psi_1, x_{i,2} = \psi_2, u_i = u, i = 1, 2, 3$, and then the form of (63) is given by

$$\begin{aligned} \mathrm{d}x_{i,1} &= [-x_{i,2} + f_{i,1}^{\sigma_i(t)}(x_i, d_{i,1}(t))]\mathrm{d}t + g_{i,1}^{\sigma_i(t)}(x_i, d_{i,1}(t))\mathrm{d}w, \\ \mathrm{d}x_{i,2} &= [u_i(v_i) + f_{i,2}^{\sigma_i(t)}(x_i, d_{i,2}(t))]\mathrm{d}t + g_{i,2}^{\sigma_i(t)}(x_i, d_{i,2}(t))\mathrm{d}w, \\ y_i &= x_{i,1}, \end{aligned} \tag{64}$$

where $x_i = [x_{i,1}, x_{i,2}]^T$; $f_{i,1}^1(x_i, d_{i,1}(t)) = x_{i,1} - \frac{1}{3}x_{i,1}^3 + \cos(t)$, $f_{i,1}^2(x_i, d_{i,1}(t)) = x_{i,1} - \frac{1}{3}x_{i,1}^3 + 0.74\cos(t)$, $f_{i,2}^1(x_i) = x_{i,1} + 0.7 - 0.8x_{i,2} + 1.5\cos(t)$, $f_{i,2}^2(x_i) = 0.1(x_{i,1} + 0.7 - 0.8x_{i,2})$; w is an r-dimensional standard Wiener process; $g_{i,1}^1(x_i) = x_{i,2}\sin(x_{i,1}\cos(t))$, $g_{i,1}^2(x_i) = x_{i,1}\sin(x_{i,2}\cos(t))$, $g_{i,2}^1(x_i) = x_{i,2}\cos(x_{i,1}\sin(t))$ and $g_{i,2}^2(x_i) = x_{i,1}\cos(x_{i,2}\sin(t))$. The switching signals are shown in Fig. 2(c). The trajectory of leader is governed by $\dot{y}_0 = \cos(t) + 0.25\cos(0.5t)$. Initial states of the considered stochastic nonlinear MASs are set as $x_1(0) = [-0.8, 0]^T$, $x_2(0) = [2.5, 0]^T$, $x_3(0) = [-2, 0]^T$, and $y_0(0) = 1$. For the sake of convenience, the communication ranges are all set as $C_i = 2.5, i = 0, 1, 2, 3$. Then, $\mathcal{G}(0)$ is depicted in Fig. 2(b).

In the dynamics of the first state component in (64), note that the gain of state $x_{i,2}$ is not positive, and thus the virtual controller is revised as

$$\begin{aligned} \alpha_{i,1} = {} & c_{i,1}Z_{i,1}\big(\Upsilon_i\varpi_i\big)^{-1} + \frac{3}{2}Z_{i,1}\big(\Upsilon_i\varpi_i\big)^{1/3} \\ & + \big(\Upsilon_i\varpi_i\big)^{-1}\Big(\Pi_i + \hat{W}_{i,1}^T\Phi_{i,1}(\chi_{i,1}, \hat{\theta}_{i,1}^T\phi_{i,1}(t)) \\ & + \frac{Z_{i,1}^3\hat{M}_{i,1}^2\daleth_{i,1}^2(t)}{|Z_{i,1}^3||\hat{M}_{i,1}\daleth_{i,1}(t) + \kappa}\Big). \end{aligned} \tag{65}$$

Controller v_i is designed as

$$\begin{aligned} v_i = {} & -c_{i,2}Z_{i,2} - \frac{1}{4}Z_{i,2} - \hat{W}_{i,2}^T\Phi_{i,2}(\chi_{i,2}, \hat{\theta}_{i,2}^T\phi_{i,2}(t)) \\ & - \frac{Z_{i,2}^3\hat{M}_{i,2}^2\daleth_{i,2}^2(t)}{|Z_{i,2}^3||\hat{M}_{i,2}\daleth_{i,2}(t) + \kappa}. \end{aligned} \tag{66}$$

For $n = 2$, $N = 3$, simulation time $t = 30$s, the implement of the proposed control strategy is shown as Algorithm 1 above. In this simulation, the Gaussian-type fuzzy membership functions of RFLS approximator are selected as

$$\mu_{F^m}(\chi_{i,k}) = \exp\Big[-\frac{(\chi_{i,k} - a_m)^T(\chi_{i,k} - a_m)}{2(b_m)^2}\Big], \tag{67}$$

where $k = 1, 2$, $i = 1, 2, 3$, $m = 1, 2, \ldots, 5$, the centers are spaced in $[-5, 5]$ with $a_1 = -5, a_2 = -3, a_3 = 0, a_4 = 3, a_5 = 5$ and the widths are all set as $b_m = 2$.

Based on the guideline of the parameter selection, for $i = 1, 2, 3$, $a_{ij}^* = 3$; $\hat{W}_{i,1}(0) = \hat{W}_{i,2}(0) = \mathbf{0}_5$, $\hat{\theta}_{i,1}(0) = \hat{\theta}_{i,2}(0) = \mathbf{0}_5$, $\hat{M}_{i,1}(0) = \hat{M}_{i,2}(0) = 0$, $\hat{P}_{i,1}(0) = 0$, $\hat{Q}_{i,1}(0) = 0$; $\xi_{i,1}(0) = \xi_{i,2}(0) = 0$; $p_{i,1} = p_{i,2} = 2$, $v_{M_1} = 150, v_{M_2} = v_{M_3} = 200$, $v_{m_1} = -150, v_{m_2} = v_{m_3} = -200$, $\tau_{i,1} = 0.002$; $a = 2, d = 1, \iota = 0.3$ and $\pi_1 = \pi_2 = 0.7$; $\gamma_{1,1} = 1, \gamma_{2,1} = 0.01, \gamma_{3,1} = 0.1$, $\gamma_{i,2} = 0.01$, $\upsilon_{1,1} = \upsilon_{2,1} = 0.5, \upsilon_{3,1} = 0.1$, $\upsilon_{i,2} = 1$, $\varsigma_{1,1} = 0.3, \varsigma_{2,1} = 0.01, \varsigma_{3,1} = 0.05$, $\varsigma_{1,2} = 0.02, \varsigma_{2,2} = \varsigma_{3,2} = 0.01$, $\eta_{i,1} = 10$ and $\lambda_{i,1} = 10$; $\rho_{W_{1,1}} = 1$, $\rho_{W_{1,2}} = 0.5, \rho_{W_{2,2}} = \rho_{W_{3,2}} = 1$, $\rho_{\theta_{1,1}} = 0.1, \rho_{\theta_{2,1}} = \rho_{\theta_{3,1}} = 0.5$, $\rho_{\theta_{1,2}} = 1, \rho_{\theta_{2,2}} = 2, \rho_{\theta_{3,2}} = 1$, $\rho_{M_{1,1}} = 0.8, \rho_{M_{2,1}} = \rho_{M_{3,1}} = 1$, $\rho_{M_{1,2}} = 2, \rho_{M_{2,2}} = \rho_{M_{3,2}} = 1$, $\rho_{P_{1,1}} = 2, \rho_{P_{2,1}} = 3, \rho_{P_{3,1}} = 1$, $\rho_{Q_{i,1}} = 5$; $c_{i,1} = 30$, $c_{i,2} = 10$; $\kappa = 0.01$. It follows that prescribed interval and prescribed time are $(-0.21, 0.21)$ and $\mathcal{T} = 2$, respectively.

The simulation results are carried out. Fig. 3 depicts the trajectories of leader and three followers. We can see that the consensus is achieved in prescribed time $\mathcal{T} = 2$. To show the consensus more clearly, the trajectories of errors $e_i, i = 1, 2, 3$ and performance functions are provided in Fig. 4(a), where the red dashed lines represent $\bar{h}(t), -\underline{h}(t)$ and the blue solid lines denote errors $e_i, i = 1, 2, 3$. From Fig. 4(a), we can see that the trajectories of $e_i, i = 1, 2, 3$ keep within the bounds predetermined by $\bar{h}(t), -\underline{h}(t)$ all the time. Hence, distributed consensus errors are limited to prescribed interval $(-0.21, 0.21)$ in prescribed time $\mathcal{T} = 2$. According to Fig. 4(b), it is obvious that the connectivity is preserved. The boundedness of controller v_i and system actual input $u_i(v_i)$ are presented in Fig. 4(c). Simulation results, Figs. 3 and 4, indicate the effectiveness of the proposed adaptive fuzzy prescribed-time connectivity-preserving control strategy, which is in line with Theorem 1.

To show the characteristics of the obtained consensus control scheme, we give simulation results of the connectivity-preserving consensus control scheme in [32] and the system parameters are selected as the same as those above. Due to the

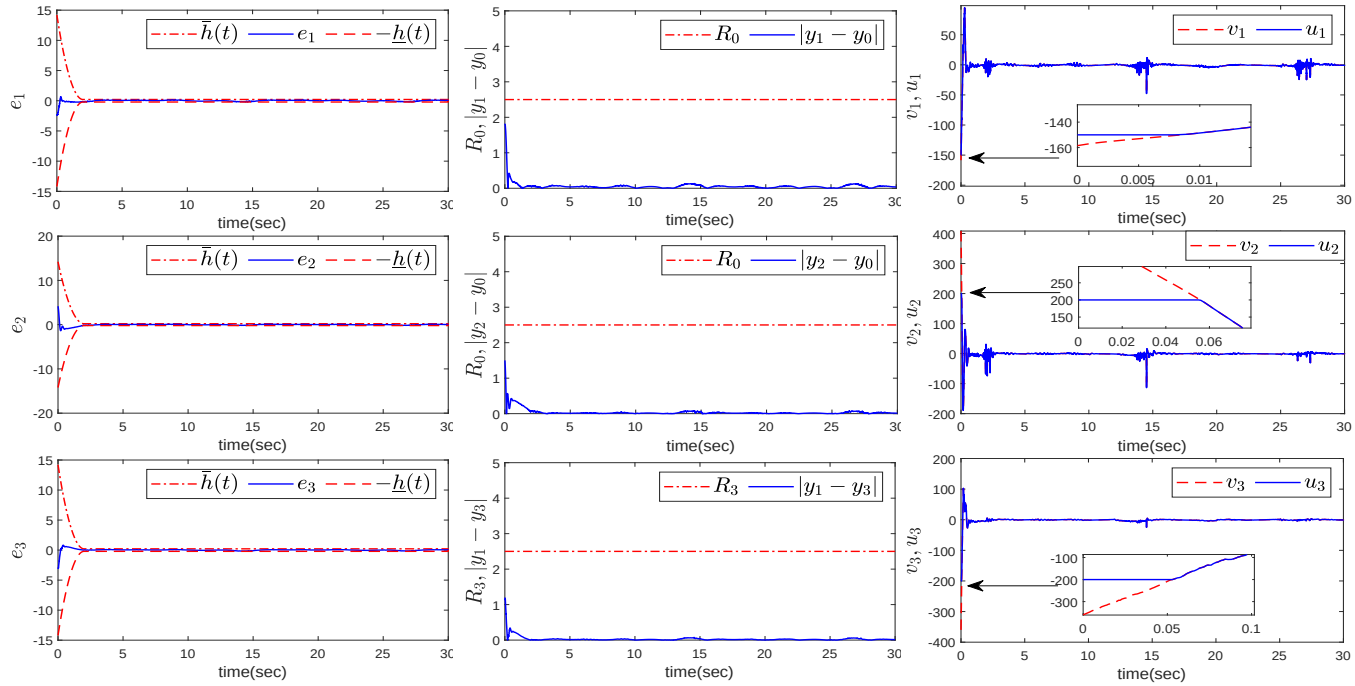

(a) (b) (c)

Fig. 4. (a) Errors e_i. (b) Connectivity preservation. (c) Input saturation.

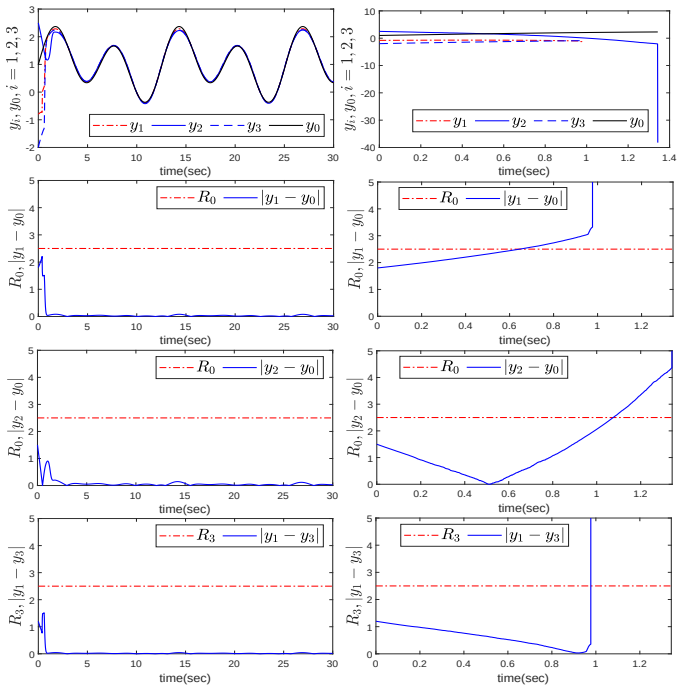

(a) (b)

Fig. 5. (a) Simulation results for deterministic MASs under the control strategy in [32]. (b) Simulation results for stochastic MASs under the control strategy in [32].

absence of switched dynamics, only the first mode is involved in this simulation.

The simulation results for the deterministic and stochastic MASs under the connectivity-preserving consensus control strategy in [32] are presented in Fig. 5(a) and Fig. 5(b). Fig. 5(a) reveal that the control strategy accomplishes the consensus of deterministic dynamics commendably. Apparently, Fig. 5(b) displays that the connectivity-preserving control objective is not achieved. This demonstrates that the control method in [32] is not a feasible strategy for the stochastic MASs investigated in this work since the effect of stochastic noise is not considered. Additionally, the proposed consensus control algorithm is superior to that in [32]. As observed from Fig. 3, the connectivity-preserving consensus control with prescribed time is obtained, while the connectivity-preserving consensus control objective in [32] is achieved as time goes to infinity.

V. Conclusion

A new adaptive fuzzy prescribed-time connectivity-preserving consensus control strategy is proposed for stochastic nonstrict-feedback switched MASs. Unlike the existing finite/fixed-time connectivity-preserving consensus results, our primary characteristic is that the settling time is allowed to be specified according to actual needs by users. Meanwhile, initial connectivity is preserved via error transformation method. What is more important, novel RFLS approximator is adopted to describe disturbance-dependent functions. RFLS develops the scope of feasibility of existing controller, which means the controlled system structure is relaxed from the lower triangular structure to the non-triangular one. Based on the stochastic differential theory, it is proved that the the connectivity-

preserving consensus can be achieved in prescribed time under the designed control strategy. Simulation results confirm the effectiveness of the obtained theoretical results. The research on consensus is the primary and essential of cooperation control technique. It provides a steady base in theory and technology for practical applications of multi-intelligent systems, e.g., vertical take-off unmanned aerial vehicles formation [39] and encirclement control in smelting plant [40].

With the limited communication ranges, communication failures and creations may exist. Thus how to design appropriate controller for the MASs suffered from switching topologies is a meaningful issue. Additionally, fuzzy systems can systematically use linguistic information from the expert knowledge and the experience of skilled workers [41], [42]. Since its flexible advantages, our future work will focus on fuzzy controller design for some application scenarios.

VI. Appendix

1) The detailed derivation of Ineq. (35).
From Lemma 1, one has

$$\begin{aligned}&Z_{i,1}^3 F_{i,1}(X_{i,1},\vartheta_{i,1})\\ \leq& Z_{i,1}^3\Big(\hat{W}_{i,1}^T\Phi_{i,1}(\chi_{i,1},\hat{\theta}_{i,1}^T\phi_{i,1}(t))+\tilde{W}_{i,1}^T(\hat{\Phi}_{i,1}-\hat{\Phi}'_{i,1}\hat{\theta}_{i,1}^T\phi_{i,1}(t))\\ &+\hat{W}_{i,1}^T\hat{\Phi}'_{i,1}\tilde{\theta}_{i,1}^T\phi_{i,1}(t)+\beta_{i,1}+\omega_{i,1}(X_{i,1},t,\mu_{i,1})\Big)+\nu_{i,1}.\end{aligned} \tag{68}$$

For $\beta_{i,1}$ and $\omega_{i,1}(X_{i,1},t,\mu_{i,1})$, according to Lemma 1, they are bounded by $\|\theta_{i,1}\|\|\phi_{i,1}(t)\hat{W}_{i,1}^T\hat{\Phi}'_{i,1}\|+\|W_{i,1}\|\|\hat{\Phi}'_{i,1}\hat{\theta}_{i,1}^T\phi_{i,1}(t)\|+|W_{i,1}|_1$ and $\bar{\omega}_{i,1}$, respectively. Then

$$\begin{aligned}&Z_{i,1}^3\big(\beta_{i,1}+\omega_{i,1}(X_{i,1},t,\mu_{i,1})\big)\\ &\leq|Z_{i,1}^3|\big(\|\theta_{i,1}\|\|\phi_{i,1}(t)\hat{W}_{i,1}^T\hat{\Phi}'_{i,1}\|\\ &\quad+\|W_{i,1}\|\|\hat{\Phi}'_{i,1}\hat{\theta}_{i,1}^T\phi_{i,1}(t)\|+|W_{i,1}|_1+\bar{\omega}_{i,1}\big).\end{aligned} \tag{69}$$

Define vectors $X=[\|\theta_{i,1}\|,\|W_{i,1}\|,|W_{i,1}|_1+\bar{\omega}_{i,1}]^T$, $Y=[\|\phi_{i,1}(t)\hat{W}_{i,1}^T\hat{\Phi}'_{i,1}\|,\|\hat{\Phi}'_{i,1}\hat{\theta}_{i,1}^T\phi_{i,1}(t)\|,1]^T$, and thus $X^TY=\|\theta_{i,1}\|\|\phi_{i,1}(t)\hat{W}_{i,1}^T\hat{\Phi}'_{i,1}\|+\|W_{i,1}\|\|\hat{\Phi}'_{i,1}\hat{\theta}_{i,1}^T\phi_{i,1}(t)\|+|W_{i,1}|_1+\bar{\omega}_{i,1}$. Based on Holder inequality, it holds $X^TY\leq\|X\|\|Y\|$. Denote $M_{i,1}=\|X\|$ and $\daleth_{i,1}(t)=\|Y\|$, and it follows that

$$Z_{i,1}^3\big(\beta_{i,1}+\omega_{i,1}(X_{i,1},t,\mu_{i,1})\big)\leq\ |Z_{i,1}^3|M_{i,1}\daleth_{i,1}(t). \tag{70}$$

Since the nonnegativity of $\hat{M}_{i,1}$ is ensured by the designed adaptive laws and $\hat{M}_{i,1}(0)>0$. Then, according to Lemma 4 in [26], one has $|Z_{i,1}^3|M_{i,1}\daleth_{i,1}(t)\leq\kappa+\frac{Z_{i,1}^6\tilde{M}_{i,1}^2\daleth_{i,1}^2(t)}{|Z_{i,1}^3||\hat{M}_{i,1}\daleth_{i,1}(t)+\kappa}+|Z_{i,1}^3|\tilde{M}_{i,1}\daleth_{i,1}(t)$. Then, Eq. (35) can be obtained by substituting (70) into (68).

2) The detailed derivation of Ineq. (60).
For $\mathcal{L}V_i\leq-\Gamma_iV_i+\Lambda_i$, one gets the following inequality based on Theorem 4.1 in [43] or Lemma 4 in [4]:

$$\frac{\mathrm{d}E[V_i]}{\mathrm{d}t}\leq-\Gamma_iE[V_i]+\Lambda_i. \tag{71}$$

And then, multipling both sides of (71) by e^{Γ_it} yields

$$\frac{\mathrm{d}\big(e^{\Gamma_it}E[V_i]\big)}{\mathrm{d}t}\leq e^{\Gamma_it}\Lambda_i. \tag{72}$$

By taking the integral of both sides of (72) at $[0,t)$, then

$$e^{\Gamma_it}E[V_i]-E[V_i(0)]\leq\frac{\Lambda_i}{\Gamma_i}\big(e^{\Gamma_it}-1\big). \tag{73}$$

Ineq. (60) holds via simple calculations.

References

[1] R. E. Precup, R. C. David, R. C. Roman, E. M. Petriu, and A. I. Szedlak-Stinean, "Slime mould algorithm-based tuning of cost-effective fuzzy controllers for servo systems," *Int. J. Comput. Int. Sys.*, vol. 14, no. 1, pp. 1042-1052, 2021.

[2] R. E. Precup, S. Preitl, and P. Korondi, "Fuzzy controllers with maximum sensitivity for servosystems," *IEEE Trans. Ind. Electron.*, vol. 54, no. 3, pp. 1298-1310, Jun. 2007.

[3] K. Li and Y. Li, "Fuzzy adaptive optimal consensus fault-tolerant control for stochastic nonlinear multiagent systems," *IEEE Trans. Fuzzy Syst.*, vol. 30, no. 8, pp. 2870-2885, Aug. 2022.

[4] Y. Zhao, H. Yu, and X. Xia, "Event-triggered adaptive consensus for stochastic multiagent systems with saturated input and partial state constraints," *Inf. Sci.*, vol. 603, pp. 16-41, Jul. 2022.

[5] Y. Xue, G. Chen, Z. Li, G. Xue, W. Wang, and Y. Liu, "Online identification of a ship maneuvering model using a fast noisy input Gaussian process," *Ocean Eng.*, vol. 250, Apr. 2022.

[6] X. You, C. C. Hua, H. N. Yu, and X. P. Guan, "Leader-following consensus for high-order stochastic multiagent systems via dynamic output feedback control," *Automatica*, vol. 107, pp. 418-424, Sep. 2019.

[7] Y. Wu, Y. Pan, and H. Liang, "Observer-based distributed fault-tolerant containment control for stochastic nonlinear multiagent systems with asymmetric hysteretic quantization," *Int. J. Robust Nonlin. Control*, vol. 32, no. 13, pp. 7408-7430, Sep. 2022.

[8] Z. Li and J. Zhao, "Adaptive consensus of nonstrict-feedback switched multiagent systems with input saturations," *IEEE/CAA J. Autom. Sinica*, vol. 8, no. 11, pp. 1752-1761, Nov. 2021.

[9] L. Zhang, W. Che, C. Deng, and Z. Wu, "Prescribed performance control for multi-agent systems via fuzzy adaptive event-triggered strategy," *IEEE Trans. Fuzzy Syst.*, vol. 30, no. 12, pp. 5078-5090, Dec. 2022.

[10] B. van der Pol and J. D. Sc, "Forced oscillations in a circuit with non-linear resistance," *The London, Edinburgh, and Dublin Philosophical Magazine and Journal of Science*, vol. 3, pp. 65-80, 1927.

[11] S. Liuzzo, R. Marino, and P. Tomei, "Adaptive learning control of nonlinear systems by output error feedback," *IEEE Trans. Autom. Control*, vol. 52, no. 7, pp. 1232-1248, Jul. 2007.

[12] W. Chen, L. Jiao, R. Li, and J. Li, "Adaptive backstepping fuzzy control for nonlinearly parameterized systems with periodic disturbances," *IEEE Trans. Fuzzy Syst.*, vol. 18, no. 4, pp. 674-685, Aug. 2010.

[13] W. Chen and L. Jiao, "Adaptive tracking for periodically time-varying and nonlinearly parameterized systems using multilayer neural networks," *IEEE Trans. Neural Netw.*, vol. 21, no. 2, pp. 345-351, Feb. 2010.

[14] M. Lv, B. De Schutter, W. Yu, W. Zhang, and S. Baldi, "Nonlinear systems with uncertain periodically disturbed control gain functions: adaptive fuzzy control with invariance properties," *IEEE Trans. Fuzzy Syst.*, vol. 28, no. 4, pp. 746-757, Apr. 2020.

[15] H. Ma, H. Ren, Q. Zhou, R. Lu, and H. Li, "Approximation-based nussbaum gain adaptive control of nonlinear systems with periodic disturbances," *IEEE Trans. Syst. Man Cybern., Syst.*, vol. 52, no. 4, pp. 2591-2600, Apr. 2022.

[16] Z. Kan, E. A. Doucette, and W. E. Dixon, "Distributed connectivity preserving target tracking with random sensing," *IEEE Trans. Autom. Control*, vol. 64, no. 5, pp. 2166-2173, May 2019.

[17] S. J. Yoo, "Connectivity-preserving consensus tracking of uncertain nonlinear strict-feedback multiagent systems: An error transformation approach," *IEEE Trans. Neural Netw. Learn. Syst.*, vol. 29, pp. 4542-4548, Sep. 2018.

[18] S. P. Bhat and D. S. Bernstein, "Finite-time stability of continuous autonomous systems," *SIAM J. Control Optim.*, vol. 38, no. 3, pp. 751-766, May 2000.

[19] A. Polyakov, "Nonlinear feedback design for fixed-time stabilization of linear control systems," *IEEE Trans. Autom. Control*, vol. 57, no. 8, pp. 2106-2110, Aug. 2012.

[20] C. Sun, G. Hu, L. Xie, and M. Egerstedt, "Robust finite-time connectivity preserving coordination of second-order multiagent systems," *Automatica*, vol. 89, pp. 21-27, Mar. 2018.

[21] Y. Cao, W. Ren, D. W. Casbeer, and C. Schumacher, "Finite-time connectivity-preserving consensus of networked nonlinear agents with unknown Lipschitz terms," *IEEE Trans. Autom. Control*, vol. 61, no. 6, pp. 1700-1705, Jun. 2016.

[22] N. Gu, D. Wang, Z. Peng, and L. Liu, "Observer-based finite-time control for distributed path maneuvering of underactuated unmanned surface vehicles with collision avoidance and connectivity preservation," *IEEE Trans. Syst. Man Cybern., Syst.*, vol. 51, no. 8, pp. 5105-5115, Aug. 2021.

[23] F. Sun, F. Wang, P. Liu, and J. Kurths, "Robust fixed-time connectivity preserving consensus of nonlinear multiagent systems with disturbance," *Int. J. Robust Nonlin. Control*, vol. 32, no. 3, pp. 1469-1486, Feb. 2022.

[24] P. Li, Z. Song, Z. Wang, and W. Liu, "Fixed-time consensus for disturbed multiple euler-lagrange systems with connectivity preservation and quantized input," *Appl. Math. Comput.*, vol. 380, Sep. 2020.

[25] Y. Liu, F. Zhang, P. Huang, and Y. Lu, "Fixed-time consensus tracking control with connectivity preservation for strict-feedback nonlinear multiagent systems," *ISA Trans.*, vol. 123, pp. 14-24, Apr. 2022.

[26] J. Yi, "Adaptive fuzzy connectivity-preserving consensus protocols for stochastic strict-feedback nonlinear MASs subject to unmeasured periodic disturbances," *Appl. Math. Comput.*, vol. 444, May 2023.

[27] G. Dong, H. Li, H. Ma, and R. Lu, "Finite-time consensus tracking neural network FTC of multiagent systems," *IEEE Trans. Neural Netw. Learn. Syst.*, vol. 32, no. 2, pp. 653-662, Feb. 2021.

[28] H. Yang and D. Ye, "Adaptive fuzzy nonsingular fixed-time control for nonstrict-feedback constrained nonlinear multiagent systems with input saturation," *IEEE Trans. Autom. Control*, vol. 29, no. 10, pp. 3142-3153, Oct. 2021.

[29] W. Sun, S. F. Su, Y. Wu, and J. Xia, "Novel adaptive fuzzy control for output constrained stochastic nonstrict feedback nonlinear systems," *IEEE Trans. Fuzzy Syst.*, vol. 29, no. 5, pp. 1188-1197, May 2021.

[30] H. Zhou, S. Sui, and S. Tong, "Fuzzy adaptive finite-time consensus control for high-order nonlinear multiagent systems based on event-triggered," *IEEE Trans. Fuzzy Syst.*, vol. 30, no. 11, pp. 4891-4904, Nov. 2022.

[31] D. Wu and J. M. Mendel, "Similarity measures for closed general Type-2 fuzzy sets: Overview, comparisons, and a geometric approach," *IEEE Trans. Fuzzy Syst.*, vol. 27, no. 3, pp. 515-526, Mar. 2019.

[32] S. J. Yoo, "Connectivity-preserving design strategy for distributed cooperative tracking of uncertain nonaffine nonlinear time-delay multi-agent systems," *Inf. Sci.*, vol. 514, pp. 541-556, Apr. 2020.

[33] S. J. Yoo, "Distributed consensus tracking of a class of asynchronously switched nonlinear multiagent systems," *Automatica*, vol. 87, pp. 421-427, Jan. 2018.

[34] B. Ning, Q. L. Han, Z. Zuo, L. Ding, Q. Lu, and X. Ge, "Fixed-time and prescribed-time consensus control of multiagent systems and its applications: a survey of recent trends and methodologies," *IEEE Trans. Ind. Inf.*, vol. 19, no. 2, pp. 1121-1135, Feb. 2023.

[35] Y. Ren, W. Zhou, Z. Li, L. Liu, and Y. Sun, "Prescribed-time cluster lag consensus control for second-order non-linear leader-following multiagent systems," *ISA Trans.*, vol. 109, pp. 49-60, Mar. 2021.

[36] X. Gong, Y. Cui, T. Wang, J. Shen, and T. Huang, "Distributed prescribed-time consensus observer for high-order integrator multiagent systems on directed graphs," *IEEE Trans. Circuits Syst. II Express Briefs*, vol. 69, no. 4, pp. 2216-2220, Apr. 2022.

[37] Y. Wang, Y. Song, and D. J. Hill, "Zero-error consensus tracking with preassignable convergence for non-affine multiagent systems," *IEEE Trans. Cybern.*, vol. 51, no. 3, pp. 1300-1310, Mar. 2021.

[38] Y. Zhao, Y. Liu, G. Wen, W. Ren, and G. Chen, "Designing distributed specified-time consensus protocols for linear multiagent systems over directed graphs," *IEEE Trans. Autom. Control*, vol. 64, no. 7, pp. 2945-2952, Jul. 2019.

[39] H. Ucgun, I. Okten, U. Yuzgec, and M. Kesler, "Test platform and graphical user interface design for vertical take-off and landing drones," *Rom. J. Inform. Sci. Technol.*, vol. 25, no. 3, pp. 350-367, 2022.

[40] S. Xie, Y. Xie, H. Ying, Z. Jiang, and W. Gui, "Neurofuzzy-based plant-wide hierarchical coordinating optimization and control: An application to zinc hydrometallurgy plant," *IEEE Trans. Ind. Electron.*, vol. 67, no. 3, pp. 2207-2219, Mar. 2020.

[41] Z. Preitl, R. E. Precup, J. K. Tar, and M. Takacs, "Use of multi-parametric quadratic programming in fuzzy control systems," *Acta Polytech. Hung.*, vol. 3, no. 3, pp. 29-43, 2006.

[42] X. Ban, L. Ren, Z. Yan, and H. Ying, "Perfect tracking control of discrete-time quadratic T-S fuzzy systems via feedback linearisation," *Int. J. Syst. Science*, vol. 50, no. 12, pp. 2316-2332, Sep. 2019.

[43] H. Deng, M. Krstic, and R. J. Williams, "Stabilization of stochastic nonlinear systems driven by noise of unknown covariance," *IEEE Trans. Autom. Control*, vol. 46, no. 8, pp. 1237-1253, Aug. 2001.