5-2023

Performance Analysis Of Hybrid Ai-Based Technique For Maximum Power Point Tracking In Solar Energy System Applications

Adeyemi R. Taylor
Prairie View A&M University

PERFORMANCE ANALYSIS OF HYBRID AI-BASED TECHNIQUE FOR MAXIMUM POWER POINT TRACKING IN SOLAR ENERGY SYSTEM APPLICATIONS

A Dissertation

by

ADEYEMI R TAYLOR

Submitted to the Office of Graduate Studies
Prairie View A&M University
in partial fulfillment of the requirements for the degree of

DOCTOR OF PHILOSOPHY

May 2023

Major Subject: Electrical Engineering

PERFORMANCE ANALYSIS OF HYBRID AI-BASED TECHNIQUE FOR MAXIMUM POWER POINT TRACKING IN SOLAR ENERGY SYSTEM APPLICATIONS

A Dissertation

by

ADEYEMI R TAYLOR

Submitted to the Office of Graduate Studies
Prairie View A&M University
In partial fulfillment of the requirements for the degree of

DOCTOR OF PHILOSOPHY

Approved as to style and content by:

Sarhan Musa Committee Chair	Kelvin Kirby Committee Member
Penrose Cofie Member	Richard Wilkins Member
Irvin Osborne-Lee Member	Annamalai Annamalai Interim Head of Department
Pamela Obiomon Dean, College of Engineering	Tyrone Tanner Dean, Office of Graduate Studies

May 2023

Major Subject: Electrical Engineering

ABSTRACT

Performance Analysis of Hybrid AI-based Technique for Maximum Power Point Tracking in Solar Energy System Applications

(May 2023)

Adeyemi Taylor, M.S. EE, Prairie View A&M University

Chair of Advisory Committee: Dr. Sarhan Musa

Demand is increasing for a system based on renewable energy sources that can be employed to both fulfill rising electricity needs and mitigate climate change. Solar energy is the most prominent renewable energy option. However, only 30%-40% of the solar irradiance or sunlight intensity is converted into electrical energy by the solar panel system, which is low compared to other sources. This is because the solar power system's output curve for power versus voltage has just one Global Maximum Power Point (GMPP) and several local Maximum Power Points (MPPs). For a long time, substantial research in Artificial Intelligence (AI) has been undertaken to build algorithms that can track the MPP more efficiently to acquire the most output from a Photovoltaic (PV) panel system because traditional Maximum Power Point Tracking (MPPT) techniques such as Incremental Conductance (INC) and Perturb and Observe (P&Q) are unable to track the GMPP under varying weather conditions. Literature (K. Y. Yap et al., 2020) has shown that most AI-based MPPT algorithms have a faster convergence time, reduced steady-state oscillation, and higher efficiency but need a lot of processing and are expensive to implement. However, hybrid MPPT has been shown to have a good performance-to-complexity ratio. It incorporates the benefits of traditional and AI-based MPPT methodologies but choosing

the appropriate hybrid MPPT techniques is still a challenge since each has advantages and disadvantages. In this research work, we proposed a suitable hybrid AI-based MPPT technique that exhibited the right balance between performance and complexity when utilizing AI in MPPT for solar power system optimization. To achieve this, we looked at the basic concept of maximum power point tracking and compared some AI-based MPPT algorithms for GMPP estimation. After evaluating and comparing these approaches, the most practical and effective ones were chosen, modeled, and simulated in MATLAB Simulink to demonstrate the method's correctness and dependability in estimating GMPP under various solar irradiation and PV cell temperature values. The AI-based MPPT techniques evaluated include Particle Swarm Optimization (PSO) trained Adaptive Neural Fuzzy Inference System (ANFIS) and PSO trained Neural Network (NN) MPPT. We compared these methods with Genetic Algorithm (GA)-trained ANFIS method. Simulation results demonstrated that the investigated technique could track the GMPP of the PV system and has a faster convergence time and more excellent stability. Lastly, we investigated the suitability of Buck, Boost, and Buck-Boost converter topologies for hybrid AI-based MPPT in solar energy systems under varying solar irradiance and temperature conditions. The simulation results provided valuable insights into the efficiency and performance of the different converter topologies in solar energy systems employing hybrid AI-based MPPT techniques. The Boost converter was identified as the optimal topology based on the results, surpassing the Buck and Buck-Boost converters in terms of efficiency and performance.

Keywords—Maximum Power Point Tracking (MPPT), Genetic Algorithm, Adaptive Neural-Fuzzy Interference System (ANFIS), Particle Swarm Optimization (PSO)

DEDICATION

I dedicate this dissertation to my family.

ACKNOWLEDGEMENTS

My heartfelt appreciation goes to my advisor Dr. Sarhan Musa for his tutelage and invaluable support during this research work. I have benefitted immensely from his mentorship and that has greatly impacted my research experience. It is an honor to have worked with him.

I would like to thank other members of my dissertation committee namely Dr. Wilkins, Dr. Cofie, Dr. Kirby and Dr. Osborne-Lee for their valuable suggestions and contributions to my success. I wish to thank the ECE Department faculties for their teaching and help when I needed it. Special thanks to the Office of Graduate Studies under the leadership of Dr. Tyrone Tanner and to the Office of Research and Innovation for supporting me during my program.

Also, special thanks and appreciation go to my dear wife, Comfort for her encouragement, support, and for nudging me to be successful, and to my lovely daughters, Shalom, and Olivia. I thank my siblings, friends, Titilope Banjo, Opeyemi Ayanbanjo, Adetayo and Sola Adeyinka, and the leadership, Samuel and Bunmi Adebiyi, and stewards of my local church for their prayer, love, and support.

Finally, I take this opportunity to thank all staff, faculty who impacted me, and the students of the Electrical and Computer Engineering Department, who in one way or the other, have made my time at Prairie A&M University worthwhile.

TABLE OF CONTENTS

LIST OF FIGURES

FIGURE PAGE

LIST OF TABLES

GLOSSARY

Terms	Definitions
Adaptive Neural Fuzzy Inference System (ANFIS)	A system that combines fuzzy logic and neural networks for modeling complex relationships and decision-making.
Artificial Intelligence (AI)	Computer systems designed to perform activities that typically necessitate human cognitive abilities, such as learning, problem-solving, and decision-making.
Boost Converter	A DC-DC converter that increases the input voltage to a higher output voltage.
Buck Converter	A DC-DC converter that decreases the input voltage to a lower output voltage.
Buck-Boost Converter	A DC-DC converter that can either increase or decrease the input voltage as required.
Cuckoo Search (CS)	An optimization algorithm inspired by the breeding behavior of cuckoo birds that helps solve complex problems.
DC-DC converter	An electronic device that converts direct current (DC) voltage from one level to another.
Flower Pollination Algorithm (FPA)	A nature-inspired optimization algorithm based on the pollination process of flowering plants.
Fuzzy Logic Controller (FLC)	A control system that uses fuzzy logic to make decisions based on approximate reasoning.
Global Maximum Power Point (GMPP)	The highest power output point on the power-voltage curve of a solar panel under varying conditions.
Hill Climbing (HC) Algorithm	An optimization algorithm that iteratively searches for the best solution by making small changes to the current solution.
Incremental Conductance (IC)	An MPPT algorithm that compares a solar panel's incremental and instantaneous conductance to find the maximum power point.
Least Squares Estimator (LSE)	A statistical method used to find the best-fitting line or curve through data points by minimizing the sum of squared errors.
Maximum Power Point Tracking (MPPT)	A technique that optimizes the power output of solar panels by finding and operating at their maximum power point.

Maximum Power Points (MPPs)	Points on the power-voltage curve where the solar panel generates maximum electrical power.
Neural Network (NN)	A computing system inspired by the human brain, designed to learn patterns, and make decisions.
Open Circuit Voltage	The voltage across a solar cell's output terminals when no current is flowing.
Partial Shading Conditions (PSCs)	Uneven sunlight on a solar panel causing reduced performance and multiple maximum power points.
Particle Swarm Optimization (PSO)	A computational method inspired by the social behavior of birds or fish that helps solve optimization problems.
Perturb and Observe (PO)	An MPPT algorithm that adjusts the operating point of a solar panel to find the maximum power point.
Photovoltaic (PV)	A technology that converts sunlight into electricity using solar cells.
Proportional-Integral (PI) controller	A control mechanism that adjusts the output based on the error between the desired and actual values, considering both the present and past errors.
Renewable Energy Sources (RES)	Natural energy sources that can be replenished, such as solar, wind, and hydropower.
Response Time	System's duration to react to an input or change in conditions.
Salp Swarm Optimization	A nature-inspired optimization algorithm based on the swimming behavior of salps, a type of marine organism.
Short Circuit Current	The current that flows when a solar cell's output terminals are directly connected, providing no resistance.
Slew Rate	The rate at which the output of a system can changes in response to an input signal.
Solar irradiance	The amount of sunlight energy reaching a specific Earth area, usually measured in watts per square meter (W/m^2).

CHAPTER 1

1. INTRODUCTION

1.1 Motivation

The present civilized world is currently facing several serious challenges, the most significant of which are global energy shortages and threats posed by climate change. The principal causes of the matter are the limited reserves of fossil fuels and the release of gases that contribute to global warming. It is increasingly recognized that the best solution to these issues is to switch to Renewable Energy Sources (RES) such as solar, wind, and tidal power. Solar energy systems are one of the RES that is regarded as a viable source for a solution to the issue since solar energy can be obtained in an abundant supply and is free of charge.

Solar photovoltaic cells, often called PV cells, use a power electronics converter to convert solar energy into regulated electrical energy [1]. These solar PV cells have linear and nonlinear features, but their efficiency is relatively poor [2]. Under altered environmental conditions, such as partially shaded, solar cells' characteristics become more complicated. Because of these problems, researchers need to maximize the amount of electricity that can be extracted from solar PV cells even though atmospheric conditions vary. Maximum Power Point Tracking (MPPT) is a technique that optimizes the power output of solar panels by finding and operating at their maximum power point. The power transfer efficiency from the solar cell varies with factors such as sunlight, shade, solar panel temperature, and the electrical characteristics of the load. MPPT aims to mitigate this issue [3].

This dissertation follows the style of IEEE journal on Power and Energy Systems.

1.2 Problem Statement

Since the Maximum Power Point (MPP) of solar panels changes depending on the environment, it is important to keep them running close to the maximum point to get the most power out of them. The MPP can be monitored in various ways, both conventional and unconventional. Because of their accessibility and simplicity, traditional approaches (such as Perturb and Observe (PO) [4] and Incremental Conductance (IC) [5]) have seen widespread usage. Because the disturbance persists even when the system works at MPP, both the PO and IC approaches lead to power oscillations around the MPP. The duty cycle step might be decreased to mitigate the issue. However, because weather patterns change, the program will follow the MPP more slowly, which will cause more power loss. In addition, the MPP may differ from the one reached by using conventional methods. Since there is often more than one optimum on the P-V curve when partial shading is present, these algorithms do their searches on a point-by-point basis.

Throughout the previous decade, several studies on alternative MPPT techniques have been reported using fuzzy logic [6], PSO [7], artificial neural networks [8], and other techniques. Despite promising theoretical conclusions, their intricacy and associated knowledge requirements make practical application challenging. Hybrid approaches are the most effective overall because they mix and integrate two or more classic and non-traditional algorithms, which helps to balance out genuine concerns [9] mutually. Researchers still have trouble choosing the best hybrid solutions because the output of a solar energy system depends on things like how hard it is to set up and how fast it can track changes in the solar irradiance.

1.3 Contribution

As a result, the evaluation and classification of high-performing MPPT techniques based on three distinct categories, namely, traditional methods, techniques based on artificial intelligence, and hybrid techniques, is the primary emphasis of this study. The contribution of this dissertation is as follows:

- Modeled and implemented a Genetic Algorithm (GA) trained Adaptive Neuro-Fuzzy Inference System (ANFIS) for GMPP estimation and evaluated its accuracy and reliability under a range of solar irradiance and PV cell temperature values.
- Compared various high-performing AI-based MPPT algorithms for GMPP estimation and evaluated their performance under different solar irradiance and cell temperature conditions.
- Evaluated hybrid AI-based MPPT techniques that provide an optimal balance between performance and complexity, merging the advantages of traditional and AI-based MPPT methods.
- Investigated and analyzed the suitability of Buck, Boost, and Buck-Boost converter topologies for hybrid AI-based MPPT in solar energy systems.
- Provided insights into the importance of carefully selecting the converter topology and AI-based MPPT algorithm to optimize system performance and maximize power output in solar energy systems.

1.4 Outline of the Dissertation

This dissertation proposal comprises five chapters and is framed as follows: the first chapter introduces solar energy technology and the motivation behind this work. Then the chapter further presents a brief overview on MPTT and how it finds application in tracking maximum power from the PV system. Chapter 2 presents a broad review of the different MPPT techniques under three categories, their areas of applications, benefits, and drawbacks. Some relevant research works were also reviewed under these MPPT categories. Chapter 3 investigates a method for estimation of GMPP using Hybrid AI-based MPPT algorithm for photovoltaic system under varying weather conditions. This investigated method was modeled and simulated in Matlab to demonstrate the technique's correctness and dependability in estimating GMPP. Chapter 4 presents an evaluation of the investigated hybrid method with other best performing AI based techniques for MPPT optimization. Chapter 5 investigates the suitability of Buck, Boost, and Buck-Boost converter topologies for hybrid AI-based MPPT in solar energy systems under varying solar irradiance and temperature conditions. Chapter 6 concludes the dissertation by highlighting future research recommendations and opportunities.

CHAPTER 2

2. FUNDAMENTAL CONCEPTS AND LITERATURE REVIEW

2.1 Different MPPT Techniques

The output power of a photovoltaic module depends on the solar irradiation and the temperature of the solar cells. Consequently, to optimize the efficiency of the renewable energy system, it is required to monitor the maximum power point of the PV array. A PV array has a unique operating point that can provide the most significant power to the load. This unique operating point is termed Maximum Power Point (MPP). To run a PV array at its MPP, the PV system must incorporate a maximum power point tracking (MPPT) controller since the angle of this point varies nonlinearly with solar irradiation and cell temperature. Numerous MPPT algorithms have been created and widely adopted [10]. The most common control method consists of acting automatically on the duty cycle to set the solar energy generator's output to its ideal level, regardless of fluctuations in meteorological circumstances or unexpected changes in demand. Maximum power point (MPP) occurs when the derivative of PV power by voltage (dP_{pv}/dV_{pv}) is equal to zero. To obtain the maximum power point of operation, the generator voltage V_{pv} is adjusted so that it rises when the slope dP_{pv}/dV_{pv} is positive and falls when it is negative. Figure 2.1 depicts a control scheme allowing the continuous extraction of the peak power. V_{opt} is the maximum power voltage, while K is proportional gain. Power fluctuation between two active sites is DP_{pv}, while voltage variation is DV_{pv}. Overall, the MPPT procedure primarily decreases the PV system's cost and enhances its overall efficiency [11]. Since the first usage of photovoltaic (PV) systems as off-grid and grid-connected systems, several researchers

have suggested and developed various techniques to collect the most significant amount of electricity from PV panels. As a result, there has been a fast advancement in the methodologies. Due to this, many academics have classified MPPT approaches depending on their modernity. Based on their level of modernity, MPPT approaches may be divided into three groups: classical techniques, artificial intelligence techniques, and hybrid techniques. Since photovoltaic (PV) systems began, conventional approaches have utilized fundamental algorithms such as P&O and INC. AI techniques are current methods that use diverse methodologies and need significant calculations. The hybrid methodology may be divided into methods combining two conventional ways [12], two AI methods [13], and a mixture of the traditional and AI methods [14].

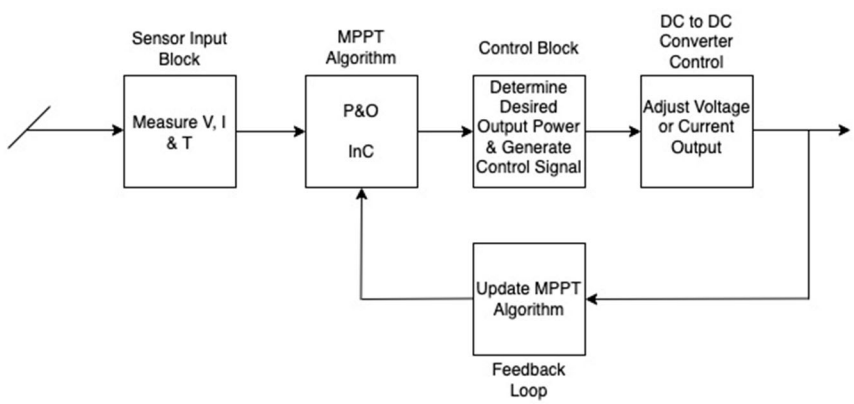

Figure 2.1 MPPT Control Scheme

Many conventional MPPT methods, with or without PSC, have been used to trace the one-of-a-kind MPP under uniform conditions. The most well-known traditional methods are called "perturb and observe," "incremental conductance," "constant voltage," and "hill climbing," respectively.

2.1.1 Traditional Methods

2.1.1.1 Perturb-and-Observe Technique

The Perturb-and-Observe (P&O) approach takes the measured PV voltage, current, and output power. It utilizes these to choose whether to raise or lower the voltage by adjusting the duty ratio of the DC-DC converter. This continues until the maximum power point is tracked. On the PV characteristic, the concept that underpins this method is shown in Figure. 2.2. The reasoning behind the P&O is to mess with the PV output voltage and then see how much power shifts. If PV power captured increases, the perturbation choice should continue in the same direction whether PV voltage rises or falls until MPP is observed; however, the voltage increment (V) should be reversed if output power declines. When the dP/dV ratio equals zero, the power that can be harvested is at its highest [15]. The P&O technique's flowchart is seen in Figure 2.3 below. It has been shown that the P&O approach is practical when the insolation does not change drastically over a short period. On the other hand, the P&O technique cannot rapidly determine where the most significant power spots are located. Additionally, this algorithm may track in the other direction in quickly shifting irradiance levels.

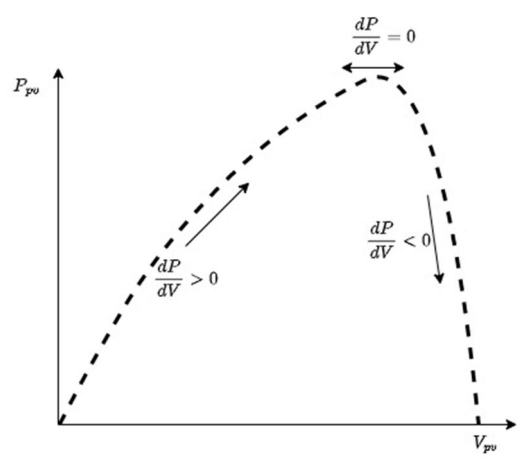

Figure 2.2 Perturb & Observe P-V Characteristics Modified From [15].

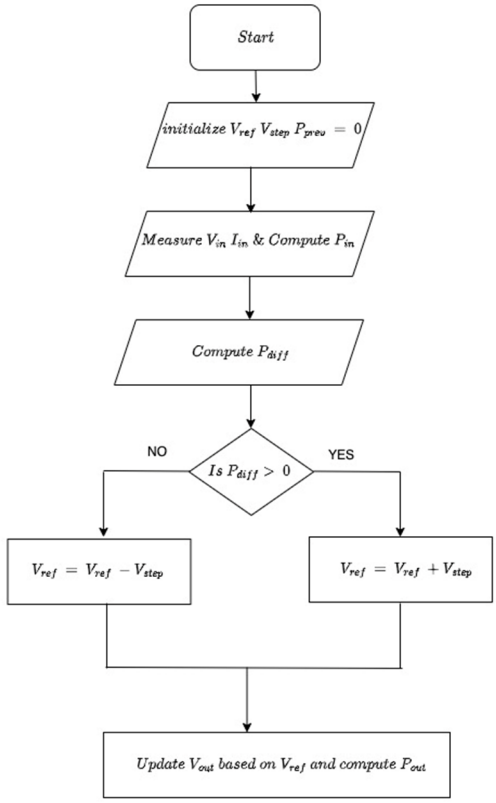

Figure 2.3 Flow Chart of Perturb and Observe

2.1.1.2 Incremental Conductance

Finding the derivative of the PV output power with respect to the output voltage, or dP/dV [17], is the primary goal of the incremental conductance method. When the dP/dV of a PV system approaches zero, the system can generate its maximum output power. Based on the incremental power and voltage output from the PV system, the controller determines dP/dV. The controller will gradually increase or decrease the PV voltage until dP/dV approaches zero, at which point the PV array will produce its maximum amount of energy. The InC process is depicted in the flowchart shown in Figure 2.4 flowchart. It can more quickly and correctly follow the MPP because it uses the distinct qualities of both the PV array's output PV curve and its I-V curve. For the

IncCond MPPT method, the MPP is followed when dP/dV = 0 based on the P-V characteristic slope, as shown in Eqn. 2.1 below.

$$\frac{dP}{dV} = \frac{d(VI)}{dV} = I + V\frac{dI}{dV} = 0 \tag{2.1}$$

by rearranging the Eqn. 2.1, we get: $-\frac{\mathrm{I}}{\mathrm{V}} = \frac{\mathrm{dI}}{\mathrm{dV}}$ (2.2)

PV voltage and current increment are denoted by dV and dI. Figure 2.5 [18] shows the MPP being followed and captured when the condition $\frac{\mathrm{d}I_{PV}}{\mathrm{d}V_{PV}} = -\frac{I_{PV}}{V_{PV}}$ is met. For a given P-V curve, the operating point will be to the left of the MPP if $\left(\frac{\mathrm{d}I_{PV}}{\mathrm{d}V_{PV}} > -\frac{I_{PV}}{V_{PV}}\right)$ and right of the MPP if $\left(\frac{dI_{pV}}{\mathrm{d}V_{PV}} < -\frac{I_{PV}}{V_{PV}}\right)$.

This algorithm's speed in power tracking is its key benefit over the P&O technique. However, employing a derivative algorithm causes the outcome to be unstable. Furthermore, low sunlight conditions make the differentiation process more challenging, leading to poor outcomes.

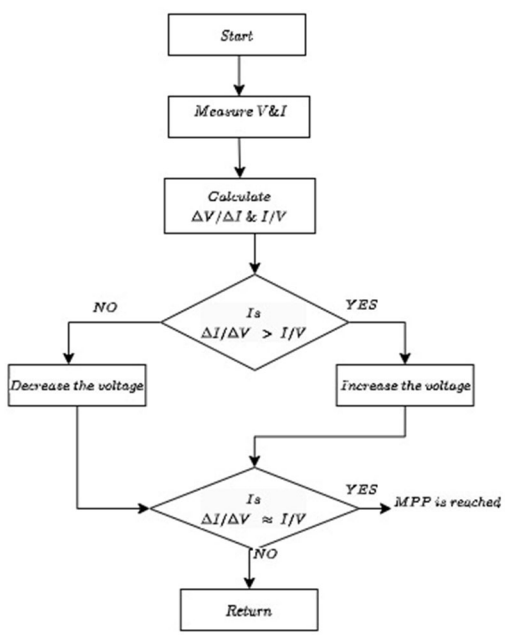

Figure 2.4 Flow Chart of Incremental Conductance

4.

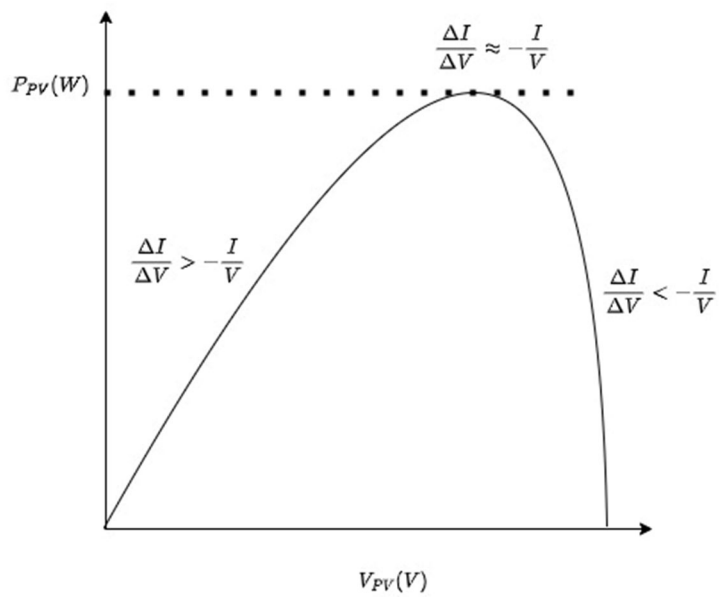

Figure 2.5. Incremental Conductance P-V Characteristics

2.1.1.3 Constant Voltage

Two types of constant voltage regulation exist: the output voltage is held at a fixed value regardless of the input voltage, and the output voltage is held at a fixed ratio to the open circuit voltage as measured. It involves temporarily cutting off power flow and measuring the open-circuit voltage with no current flowing through it. Once the open-circuit voltage Voc has been determined, the controller may begin operation with the voltage set to a predetermined ratio, such as 0.76. This is the maximum practical power calculated in advance, either via empirical testing or theoretical modeling [19]. By controlling the array voltage and making it coincide with the fixed reference voltage $V_{ref} = kV_{oc}$, the array's operating point may be maintained close to MPP. V_{ref} is set as a ratio to V_{oc}, although its value may be adjusted to achieve maximum performance

considering other criteria besides the MPP. The approach allows possible future improvement since, among other things, the ratio of MPP voltage to V_{oc} is nearly constant. Although its efficacy is modest in comparison to other active MPPT systems, its implementation is simple, and its installation costs are inexpensive. Figure 2.6 [20] depicts the block architecture of a CV controller, where V PV is merely monitored to supply the duty cycle of the DC-DC converter via the PI regulator to track the MPP.

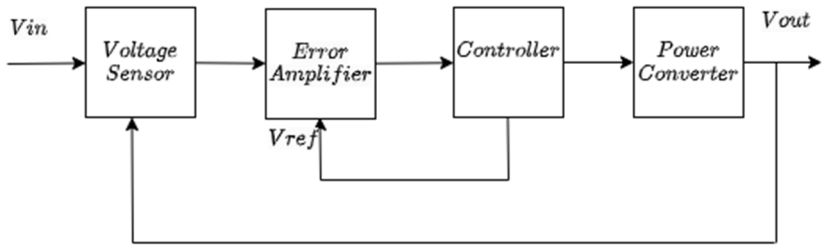

Figure 2.6 Block Architecture for CV Controller.

2.1.1.4 Hill Climbing Technique

This technique's operation resembles that of the P&O approach. Instead of adjusting the PV panel's current or voltage, this technique updates the panel's operating point by changing the duty cycle [21]. If raising the duty cycle results in more output power, the duty cycle will be extended further; otherwise, the duty cycle will be lowered [22]. The HC approach is appealing because it eliminates the need for a proportional-integral (PI) action when altering the power converter's duty cycle [23]. The duty cycle is regularly adjusted, always going toward higher output power and with a fixed step size. Fluctuations around the MPP dramatically impact the efficiency of PV systems, and this approach is no exception since the duty cycle feeds the power converter directly.

2.1.2 Artificial Intelligence Methods

Slow tracking speed and poor efficiency under quick irradiance change and shade circumstances are only two of the many problems with conventional MPPT systems. If the GMPP arises after the LMPP during the search operation, under shading circumstances, traditional MPPT methods will only target the LPP's first peak and then center their calculations there [24]. The use of AI techniques has been offered as a means of addressing these concerns. Artificial intelligence techniques may lessen disturbances in the vicinity of MPP. These techniques have proven effective in various settings, both with and without shielding from the sun [25]. Many methods have been developed for monitoring the MPP of PV systems, most of which are based on optimization concepts. We narrowed our emphasis to the methods with the highest reported performance for this analysis. These techniques formed the basis for our proposed method, including ANN, FLC, PSO, and GA.

2.1.2.1 Artificial Neural Network Technique

ANNs aim to make algorithms as close as possible to the human brain regarding how they interpret data. An essential step in this direction is the development of highly parallelized networks, with neurons serving as the primary nonlinear building blocks. Each model's parallel network is trained to address a unique challenge [26]. A variable outside the ANN itself determines the activations of the neurons in the input layer of an ANN. As a rule, networks have three distinct levels: input, hidden, and output. The input layer takes in information from the outside world, while the output layer delivers that data to the intended recipient. In Figure 2.7 [27], we see an overview of the ANN framework. There might be several layers between the input and output stages that are only sometimes visible. Any combination of open-circuit voltage (V_{OC}), short-circuit.

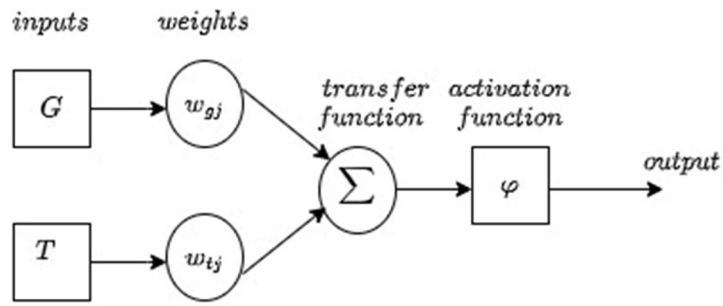

Figure 2.7 Framework of ANN.

current (I_{SC}), irradiance (G), and temperature (Tj) may be used as input variables in photovoltaic systems.

Mainly, ANNs may discover complicated nonlinear correlations between dependent and independent variables without a precise mathematical model. Many MPPT controllers using ANN have been created [28] to solve the problems encountered by earlier versions of the typical ANN techniques. To solve this nonlinear problem, the authors of [29] suggest an ANN-fitted MPPT that maximizes efficiency. The suggested ANN-MPPT is compared to more standard approaches like the P&O technique. Regarding efficiency and reducing oscillations around the MPP output, the analytical findings reveal that the ANN-MPPT-based technique excels over the conventional P & O MPPT.

K. H. Chao et al., suggest [31] an Extension Neural Network-based MPPT approach (ENN). The proposed ENN MPPT algorithm can automatically adjust the step size. Compared to more traditional fixed step size P&O and INC approaches, the offered strategy can effectively improve both the dynamic response and steady-state performance of PV systems simultaneously. The simulation results demonstrate the

efficiency of the proposed MPPT method utilizing the PSIM circuit-based model. The proposed ENN MPPT algorithm may also be easily implemented due to its low dependence on predefined data and straightforward learning procedures. According to Ming-Fa Tsai et al., a new MPPT method [31] is proposed using a neural network compensator based on the power versus voltage slope. A neural network insulates PV systems from the unpredictability of solar irradiation, ambient temperature, and load electrical characteristics. The duty cycle of a dc/dc converter may be controlled using a PI controller. The modeling and experimental findings have shown that the suggested MPPT controller works well when exposed to a certain level of solar irradiation and a specific group of partial shade. Based on a small number of power measurements from the PV system, Chiu YH et al., offer an ANN MPPT-based technique [32] for quickly identifying GMPP under changeable shading circumstances. Voltage and current sensors alone were employed in the process; hence no external sensors were required. The suggested solution does not need any new hardware and is not very sensitive to changes in system parameters, making it very budget friendly. According to the simulation findings, there is a compromise between the amount of power-voltage characteristic scansions, the ANN's size, and its forecast accuracy.

2.1.2.2 Fuzzy Logic Controllers

Recent years have seen an uptick in the usage of Fuzzy Logic Controllers (FLC) for locating the MPP [33, 34, 35]. FLC finds the optimal temperature and light intensity at which to operate at peak efficiency. In this situation, the fuzzy logic controller takes in power (DPpv) and voltage (DVpv) as inputs [36, 37]. The result is a shift in the reference voltage (DVpv, ref). It requires little effort to set up guidelines that will lead to convergence on the ideal solution. These regulations are conditional upon power and

voltage changes (DPpv and DVpv, respectively). The operating point is raised if the power input (Ppv) is raised. On the other hand, if the power level (Ppv) dropped, the voltage level (Vpv, ref) should also have dropped. Based on these guidelines, the MPPT algorithm measures the solar power and voltage variations, then suggests a voltage reference DVpv, ref variation based on Eq. (2.3).

$$\begin{cases} \Delta P_{\mathrm{pv}} = P_{\mathrm{pv}}(k) - P_{\mathrm{pv}}(k-1) \\ \mathrm{pv} = V_{\mathrm{pv}}(k) - V_{\mathrm{pv}}(k-1) \\ V_{\mathrm{pv-ref}}(k) = V_{\mathrm{pv}}(k-1) + \Delta V_{\mathrm{pv-ref}}(k) \end{cases} \tag{2.3}$$

Where Ppv(k) is the power output of the photovoltaic generator at time k, Vpv(k) is the voltage output at time k, and Vpv, ref(k) is the voltage output at the moment of reference. If a significant rise in voltage Vpv also results in a large increase in power Ppv, the controller will keep pushing the reference voltage Vpv, ref, up by a significant amount (V to W or W to X). When a considerable rise in voltage Vpv results in a drop in power Ppv, the controller will reduce the reference voltage Vpv, ref to quickly boost power Ppv. Optimal stabilization begins when a decrease in voltage Vpv results in a minimal rise in power Ppv. A sample Ppv (Vpv) track for a fixed irradiance and temperature is shown in Figure 2.8. The same rules trace the maximum power point when irradiance and temperature vary.

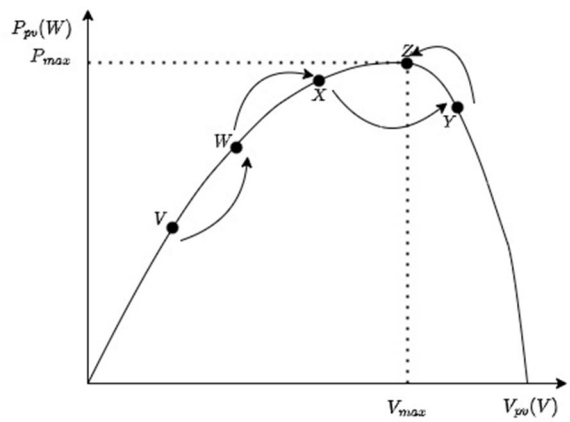

Figure 2.8 Operation Plot for FLC.

2.1.2.3 Particle Swarm Optimization Technique

Particle swarm optimization (PSO) has excellent promise among EA methods because of its low-overhead design, straightforward applicability, and quick calculation speed [39]. As a result, PSO is now one of the most often utilized approaches in the MPPT sector [40]. Search optimization is at the heart of PSO's design; thus, it can find the MPP for any given P-V curve, regardless of the conditions in which the curve is operated. The PSO approach may be formulated as in Eq.2.4 [40]:

$$x_i^{k+1} = x_i^k + v_i^{k+1} \tag{2.4}$$

Where vi stands for the velocity factor determined by

$$v_i^{k+1} = \omega v_i^k + c_1 r_1 \left(P_{\text{best } i}^k - x_i^k\right) + c_2 r_2 \left(G_{\text{best}}^k - x_i^k\right) \tag{2.5}$$

The inertia weight w, acceleration constants c1 and c2, and best local and best overall locations P_{best} and G_{best} are entered into Eq. 2.5 (27). The algorithm then sends the determined duty cycles to the power converter [40]. The optimization procedure begins with initializing a solution vector of voltage samples. In the first iteration, these voltage samples (represented by xi in Eq. (2.5)) are treated as starting particles and must obey.

Consequently, everything moves to its optimal location in its immediate neighborhood, P_{best}. One of these atoms or molecules is the best G_{best} in the whole world. It is the most cost-effective means of improving health and fitness. A new location for the voltage is obtained once the velocity, which acts as a disturbance to the voltage, has been calculated. As the iteration process repeats, the particles eventually settle in the optimal location for the whole system. The G_{best} position is approached as the particles come to the MPP. This is mirrored by a decrease in the P_{best} and G_{best} components in the velocity term. After some time, the voltage position is almost constant, and the velocity is reduced to zero. Once this occurs, the PV system's maximum power point (MPP) is reached. The PSO procedure's flowchart is shown in Figure 2.9 [41].

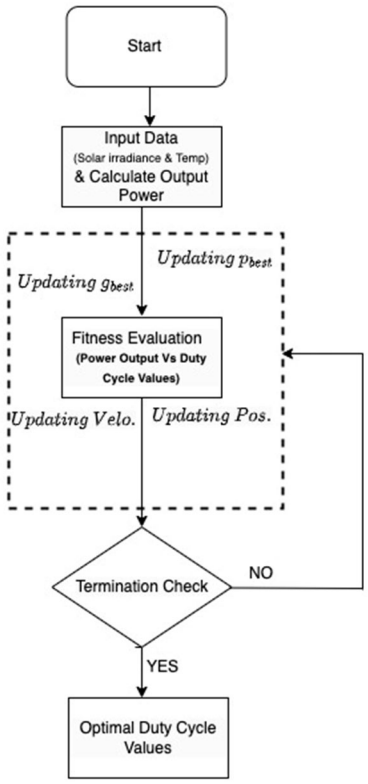

Figure 2.9. Flow Chart of PSO Technique.

2.1.2.4 Genetic Algorithm Technique

Natural selection is the mechanism that causes biological evolution, and the genetic algorithm solves optimization problems with or without constraints. Using iterative modifications, the genetic algorithm improves upon a pool of potential answers. The genetic algorithm chooses parents randomly from the existing population and then utilizes their offspring to create the next generation. Through natural selection, a population "evolves" toward a better answer over time. The use of the genetic algorithm to address a wide range of optimization issues could have been served better by conventional optimization methods, such as those with a discontinuous, non-differentiable, stochastic, or highly nonlinear objective function [42, 43]. The MPPT method is based on the GA Genetic Algorithm (GA), a system for optimization inspired by the principles of evolution. This process determines the best possible configuration of parameters using the "survival of the fittest" concept. In a GA's search method, selection, crossover, and mutation are the three fundamental operators at play. The term "selection" refers to a process wherein fitter genetic material from the current generation's population is preserved for use in the future generation's population. The crossover operator joins together two sets of DNA to create novel genetic material. To solve this problem, the algorithm was adopted by resetting the initial population every time the algorithm detected a change in irradiance or cell temperature. This mutation operator preserves genetic diversity from one generation of the population to the next and aims to achieve some stochastic dissimilarity of GA to get an earlier convergence. Accordingly, if both of the following criteria, provided in Eq. (2.6) and Eq. (2.7), are true, the GA is reset.

$$|V(K+1)-V(K)| < \Delta V \quad (2.6)$$

$$|[Ppv(k+1)- Ppv(k)]/ Ppv(k)|>\Delta P \quad (2.7)$$

The position of chromosomes is proportional to the output voltage during iteration (k). Where k is the current measurement, and k + 1 is the subsequent measurement. The process of GA is shown in Figure 2.10 [44].

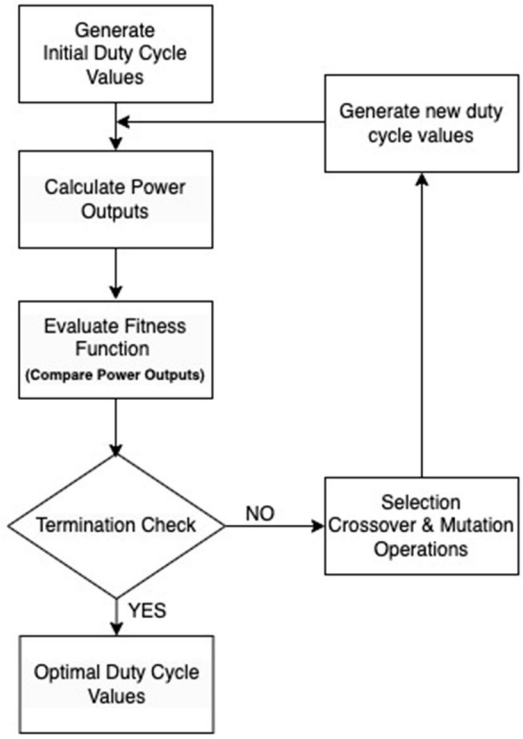

Figure 2.10. Flow Chart of Genetic Algorithm.

2.1.3 Hybrid MPPT Methods

Two conventional approaches [6], two AI approaches [7], and a traditional approach combined with AI [8] are all ways that the hybrid approach has been shown in the literature. The combined effects of these methods have improved tracking performance above that of individual algorithms. Conventional hybridization combines two approaches to overcome the shortcomings of single standard MPPT techniques. Several

studies have proposed traditional hybrid tracking approaches to increase tracking speed, efficiency, and accuracy. Combined features of a P&O and an INC are suggested in [45]. The proposed solution is predicated on automatically changeable step sizes, with larger ones used. In comparison, the power increases, and much smaller step sizes are used when the power is nearing MPP. The simulated validation of the suggested technique shows reduced steady-state oscillation around MPP and reduced tracking time for MPP compared to the standard P&O method.

The intelligent/conventional hybrid technique uses both methodologies' strengths to improve tracking. To follow the GMPP, a mismatch insolation MPPT approach based on a synthetic bee colony and hill climbing is presented in [46]. The HC algorithm is utilized to detect the presence of mismatched insolation conditions on the PV array in their suggested technique. They categorize the P-V curve shading type in the first step to locate the GMPP and its environs. One of the two methods is employed to monitor the GMPP based on the P-V curve's shading pattern. To identify mismatch insolation circumstances, the battery's charging current is measured in two successive perturbations while the HC algorithm follows the MPP under uniform insolation conditions. The suggested approach analyzes the power electronic circuit's I charge against D features to determine the shading pattern of the P-V curve and locate the GMPP. The recommended device uses a single current sensor, drastically cutting upfront costs. According to the findings of the experiments, the minimum tracking speed of the proposed GMPPT approach is determined to be 4 seconds. In addition, the suggested GMPPT method accurately follows the GMPP across all PSCs while minimizing the total cost of ownership for all sensors.

The fourth kind of hybrid method combines two different types of intelligent algorithms. There are several suggested hybrid soft computational approaches. The main objective is to enhance tracking effectiveness. It is presented in [47] that the MPP be tracked in partially shaded environments using a polar coordinated fuzzy logic controller implemented on an artificial neural network. The proposed technique employs ANN to immediately acquire the optimal MPP voltage and power. The global MPP voltage then serves as a reference for the FL controller to provide the ideal control signal for driving the power converter. The FL control was implemented using the polar information to keep the PV system's operating voltage at its perfect point. The results demonstrate that the ANN is accurate enough to map between a partly shaded state and the optimum voltage and power of the PV array. In [48], an MPPT strategy that combines the Adaptive Neuro-Fuzzy Inference System (ANFIS) and the proportional-integral (PI) controller is presented. In this study, we suggest training the network using results from analyzing the efficiency of various configurations of PV arrays. The ANFIS also uses a hybrid learning technique that combines the Least Squares Estimator (LSE) with the gradient approach. The simulation results show that the suggested method can swiftly and efficiently follow the actual maximum power without fluctuations around the GMPP, even when the sun is partially shaded. Also, the recommended approach is resistant to the erratic shifts in irradiance that occur during partial shadowing.

2.1.4 Mathematical Formulation for Solar Panel Array

When a thin wafer of semiconductor material (Silicon or Germanium) is prepared with a P-N junction, the result is a solar cell. When the photon energy of the incident irradiation is more than the band-gab energy of the semiconductor, electricity is created

when the solar cell is exposed to sunlight [49]. It is the photovoltaic effect that gives this phenomenon its name. PV modules are made up of solar cells connected in series and parallel to provide the required amount of electricity. The formulation of the solar array may benefit from inferring the electrical model of a PV array from that of a single PV cell circuit. Single-diode and dual-diode circuit models have been presented for precise formulation in [50]. These models serve as a proving ground for several research described in the [51], and they may be used to mimic the behavior of solar panel arrays using Matlab/Simulink. In most cases, the current drawn from a PV module may be stated as in Eq. (2.8), where Ipv is the photo current and Io is the exponential function of the current drawn by the diode at saturation.

$$I = I_{pv} - I_0\left[\exp\left(\frac{q(V + IR_s)}{N_s KTA}\right) - 1\right] - (V + IR_s)/(R_{sh}) \qquad (2.8)$$

Where,
q = Electron charge (1.6x10-19 Coulombs)
K =Boltzmann constant (1.38x10-23 Nm/K)
T =PV Module temperature in Kelvin
I_0 =Reverse saturation current of a diode
A =Diode ideality constant of diode
I_{pv}=Light generated current of PV cell in Ampere
R_s=Series Resistance of PV cell
R_{sh} = Shunt Resistance of PV cell
N_s = Number of PV modules connected in series
I = Output current of PV cell in Ampere

2.1.4.1 Single Diode Circuit

According to this model, depicted in Figure 2.11, a PV module is described as a current source and a diode in parallel, with minimal series and shunt resistances [52]. An illustration of the I-V relationship is shown in Figure 2.12, from which the resulting Eq. (2.8) may be:

(2.9)

$$I = I_{pv} - I_0 \left[\exp\left(\frac{q(V + IR_s)}{N_s KTA} \right) - 1 \right]$$

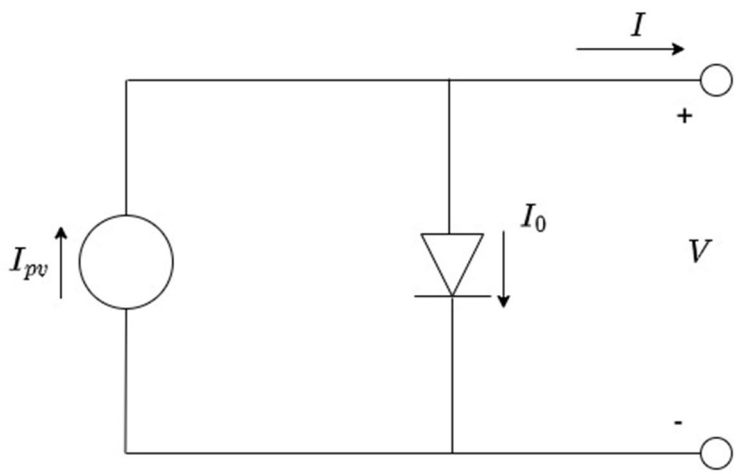

Figure 2.11 Single Diode Model

This model usually contains three free variables (I_{PV}, I_o, and A). The following formula is used to calculate I_{pv} from the manufacturer's datasheet:

$$I_{pv} = G(I_{sc} + \alpha \Delta T) \tag{2.10}$$

In this equation, G is the amount of light hitting a specific area in kilowatt-hours per square meter, I_{sc} is the short circuit current at Standard Temperature Conditions, and T is the difference between the module's and STC's temperatures. It is the current temperature coefficient from the datasheet.

Saturation Current (Io) may be written as:

$$I_o = \frac{e^{\left(\frac{|\ |\Delta T^* q}{N_s KTA}\right)} G[I_{sc} + \alpha \Delta T]}{(GI_{sc}/I_{rs} + 1)^{\frac{T_o}{T}} - e^{\left(\frac{|\ |\Delta T^* q}{NsKTA}\right)}} \tag{2.11}$$

By solving for MPP, we may determine the value of the unknown parameter "A." (V_m and I_m)

$$\frac{I_m}{I_{sc}} = e^{\frac{qV_m}{N_s KT_o A}} - \left(\frac{I_{sc} - I_m}{I_{sc}}\right) e^{\frac{qV_{oc}}{N_s KT_o A}} \tag{2.12}$$

2.1.4.1 Double Diode Circuit

In the simpler two-diode model, depicted in Figure 2.12 [53], a photocurrent source is connected in parallel with two perfect diodes that lack both series and shunt resistances. Consequently, less time is needed to run the simulation, and just four estimates of parameters may be made using the datasheet. Studying the mathematical modeling of a PV module in STC and non-STC circumstances are made much easier by the drastic shortening of simulation times.

Using Figure 3 as a reference, the following expression describes the I-V characteristic of the Two diode model:

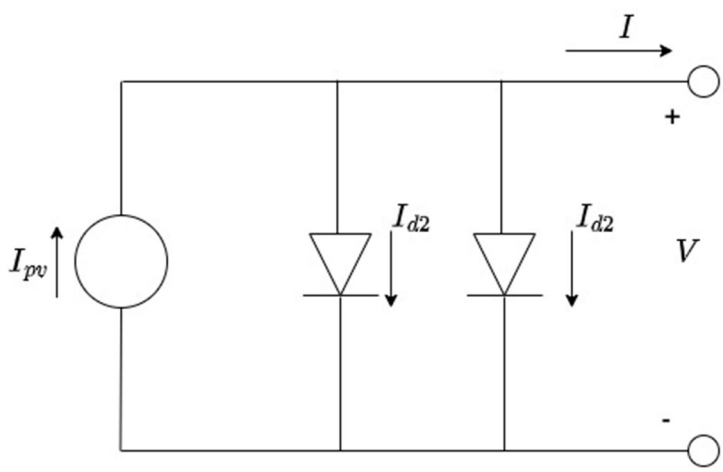

Figure 2.12. Double Diode Model.

$$I = I_{pv} - I_{01}\left[\exp\left(\frac{q(V)}{N_s KTA_1}\right) - 1\right] - I_{02}\left[\exp\left(\frac{q(V)}{N_s KTA_2}\right) - 1\right] \tag{2.12}$$

CHAPTER 3

3. SIMULATION BASED ESTIMATION OF GMPP USING ANFIS TECHNIQUE FOR PHOTOVOLTAIC SYSTEM UNDER VARYING WEATHER CONDITIONS

3.1 Introduction

Renewable energy source-based systems are now used to address rising electricity demands while also reducing global warming. Solar energy is the most preferred renewable energy source because of its straightforward construction. However, compared to other energy sources, the solar panel system only converts 30–40% of solar irradiation into electricity [54]. For a long time, substantial research in Artificial Intelligence has been undertaken to build many algorithms that can track the Maximum Power Point with efficiency.

Solar power system output power changes in response to rapidly changing environmental circumstances [55]. Even according to a computational model of solar cells, changes in the exterior environment fundamentally swing photovoltaic cell yield power [56]. Adjustment in photovoltaic cell surface temperature and surrounding light power are the two most essential elements that produce visible changes in their output characteristics. Furthermore, external environmental factors that affect the output power of photovoltaic cells, like daylight power, the surrounding temperature, and load circumstance, may result in even lower productivity. As a result, using Maximum Power Point Tracking (MPPT) in photovoltaic power generation can improve the solar energy conversion utilization ratio [57]. The PV system's efficiency can be improved using power electronic devices and a maximum power point controller. The MPPT

Controller extracts the most available power from a solar module. Using Artificial Intelligence (AI)-based MPPT algorithms for DC-DC converters can significantly improve the efficiency of a solar system. The combination of several AI optimization approaches with MPPT aims to fix and correct the constraints of traditional MPPT techniques, including Hill-Climbing (HC), Perturb and Observe (P&O), and Incremental Conductance (IC). One of these disadvantages is the old approaches' inability to follow the Global Maximum Power Point (GMPP) when the irradiation changes suddenly owing to MPPT failure [58]. The most fundamental prerequisite of a PV power framework is to maximize the energy generated by solar cells [59]. The photovoltaic output can be regulated using AI-based MPPT approaches by monitoring the continuous outer temperature and light power change to control solar production. The system adapts to the continuous outer climate to make the solar cell's output reach global maximum power point. Seasonal and other natural elements have been demonstrated to have less impact on the yield power of PV sources, allowing for more efficient use of PV energy and improved electricity transition ratio when computational intelligence technique is employed [60].

3.2 Working Concept of MPPT

Photovoltaic systems come in various designs related to electrical converter systems, outer grids, or other electric loads [61]. MPPT considers the intensity of solar irradiation falling on the solar panels, The PV cells surface temperature, and the load's electrical feature regardless of the solar power's ultimate destination. The load feature that offers the most efficient power transfer changes when these variables change. When the load characteristic changes, the system's efficiency is tuned to maintain the maximum possible power transfer efficiency. The MPP is the name given to this load

feature. The technique of searching this point and maintaining the load feature there is known as MPPT. MPPT handles the difficulty of determining the optimal load to offer to the cells to get the highest operational power out. When a solar panel is linked directly to a load, the operating factor of the panel is seldom at maximum power. The panel's electrical resistance is what determines the active end of the solar cell. The operational point can, thus, be changed closer to peak power by adjusting the impedance detected by the panel. Because panels are DC devices, DC-DC converters convert the impedance of one circuit (the source) to the impedance of the other circuit. The panel detects an impedance change when the duty ratio of the DC-DC converter is changed. The operational point will be at the peak power transfer point at a given impedance (i.e., duty ratio). With changes in atmospheric variables like irradiance and temperature, the panel's I-V curve can change dramatically. As a result, it is impossible to fix the duty ratio with such constantly changing working conditions. Thus, MPPT solutions with AI capability is employed to test cell voltages and currents regularly and modify the duty cycle depending on the situation.

3.3 Performing MPPT Method Based on AI Algorithm

Recent AI-based MPPT techniques are usually more advanced and efficient, but they require a lot of data, are incredibly complex, and expensive. It is crucial to balance performance and cost or complexity when using intelligent MPPT in a specific application. Operation quantities like following proficiency, speed, responsiveness, dependability, and cost characterize MPPT techniques [62]. There are many different types of MPPT techniques. Hybrid MPPT techniques are a group of techniques that combine two or more optimized MPPT techniques [63]. Out of the several MPPT techniques available in literature [64], this study focuses on performing members such

as Flower Pollination Algorithm (FPA) Cuckoo Search (CS), Particle Swarm Optimization (PSO), etc. of the Swarm intelligence (SI) algorithm family. SI is the most popular AI-based MPPT family, owing to its algorithms' fast performance and high accuracy, inspired by biological Swarm Intelligence (SI).

3.3.1 Flower Pollination Algorithm (FPA)

FPA is regarded as a cutting-edge population-based optimization technique. This technique is based on the pollination behavior of flowers. The main goal of flower pollination, according to biological evolution, is the survival of the fittest. In addition to the fittest, optimal reproduction of plants in terms of numbers should be considered a plant species' optimizing process [65].

3.3.2 Particle Swarm Optimization (PSO)

The PSO is the most widely used SI optimization algorithm, first proposed by Pavlyukevich, Ilya [66], and has rapidly developed in the last 20 years. It is based on the behavior of flocks of birds. Its benefits include ease of implementation and quick convergence, and it can be used to find the optimal global solution in a nonlinear, discontinuous, and non-differentiable curve. This algorithm employs several cooperative particles in an n-dimensional space. Each particle has its Pi (randomly distributed) and Vi (Vi = 0 in initiation) position and velocity. The best position of a particle so far, P_{best}, and the best place of all particles so far, G_{best}, influence its position.

3.3.2 Cuckoo Search

Yang and Deb [67] were the first to propose the Cuckoo Search (CS) algorithm. The CS calculation is a Meta-Heuristic (MH) technique propelled by cuckoo bird generation conduct. Cuckoos are parasitic organic entities that lay their eggs in the homes of different birds rather than building their own. To observe the host home up-and-comer,

cuckoo birds will fly arbitrarily starting with one home then onto the next. The cuckoo will then, at that point, select the best home where their eggs will have the most obvious opportunity with regards to incubating and creating another age of cuckoos. Cuckoo birds will put forth a few attempts to build the incubating opportunity to decisively lay their eggs in a decent position and incidentally dropping the host bird eggs outside the home in specific conditions. Nonetheless, it is possible that the host bird discovers the alien eggs and abandons its nest. The cuckoo's eggs will not hatch in this case. The CS optimization algorithm is based on this natural behavior. When estimating GMPP, most AI-based MPPT algorithms have shown to manage efficiently the issue of high convergence time and imbalance seen in traditional MPPT methods. The Fuzzy Logic Controller (FLC) based MPPT technique, for example, is regarded as a powerful tracking technique because it does not require any mathematical calculations or algorithms to calculate the global maximum power point. The main disadvantage of FLC is the drift problem caused by changing temperature and irradiance [68]. Aside from FLC, Artificial Neural Network (ANN) is another helpful way for resolving nonlinear systems because it generates output using real-time numerical data, resulting in little undulation at MPP than FLC-based MPPT [69]. Unfortunately, the ANN has a problem with extensive training data as input, and slow training of that important data is a significant problem [70]. To address the issues with FLC and ANN, Y. Sedghi et al., [71] and K. Amara et al., [72] proposed an AI technique called Adaptive Neuro-Fuzzy Inference System (ANFIS), which combines ANN and FLC. Although this method had a faster convergence time when compared to non-AI-based MPPT techniques, as presented in H. D. Tafti et al., [73], data tuning to obtain accurate data for the ANFIS model remains a challenge.

To address this challenge, this work proposes and implements a modified Genetic Algorithm trained ANFIS MPPT technique in the MATLAB/Simulink environment while estimating GMPP in PV systems under varying irradiance, temperature, and load conditions. We compared the proposed method to other AI-based MPPT techniques that perform well, such as CS, FPA, and PSO. Furthermore, this study compares MPPT techniques based on convergence time, MPPT efficiency, and steady-state oscillation, demonstrating the superiority of the GA-trained ANFIS method over CS, FPA, and PSO. Likewise, the comparison analysis was carried out under both fixed and variable solar irradiance conditions. It was discovered that the proposed GA-trained ANFIS outperforms under both solar irradiance conditions when estimating GMPP.

3.4 Overview of Proposed Method

Unlike traditional MPPT, GA-based MPPT can search GMPP rather than being stuck in the local MPP. GA is a general AI-based optimization method that can be used to solve a variety of problems. It is widely used in MPPT to modify a population of individual solutions to compute the voltage reference of a PV panel. GA has small oscillations, a fast convergence speed, and fast dynamics in general when using the voltage-step selection GA algorithm [73]. GA is initialized in the MPPT optimization process by starting the initial parent population as an array:

$$X^i = [parent^1\ parent^2\ \ parent^3 \ldots\ldots\ldots parent^n] \qquad (6)$$

Where n denotes the population size, and $parent^i$ (i=1, 2, …., n) represents the initial voltage values when the algorithm optimizes. The generated output power of the solar power system is the objective function $f(X^i)$. The objective function performs the

evaluation of fitness values for each position. After that, they are used to evolve the population and improve population fitness over time. Because of sudden changes in load, solar irradiance, or temperature, the algorithm must be reinitialized specifically for MPPT applications. As a result, once the conditions in (7) and (8) have been met, the GA-based MPPT technique is reinitialized.

$$|V(k+1) - V(k)| < \Delta V \tag{7}$$

$$\left|\frac{P(k+1) - P(k)}{P(k)}\right| > \Delta P \tag{8}$$

Where k denotes the current measurement and k+1 denotes the next measurement iteration. It is a concept based on chromosome evolution. To begin, the initial population is binary encoded and converted to real numbers, and their fitness values for each chromosome are assessed. The genetic operations of selection, crossover, and mutation are carried out to achieve the best possible result, specifically power output maximization. Since GA is based on a significant variation, radial basis function, it is used to learn temperature and irradiance data patterns. After dataset training, the algorithm accurately predicts MPP. As a result, the proposed method is justified. On the other hand, the ANFIS method is a sophisticated decision-making system that employs a multilayer mechanism and combines fuzzy logic systems (FLC) and artificial neural networks (ANN). The ANFIS technique is more adaptable and appealing due to FLC's ability to integrate the numerical quantity and ANN to train the mathematical value. It is worth noting that ANFIS has demonstrated good proof in modeling various activities and a superior learning capability that allows many systems to be updated. It has an advantage over fuzzy logic controllers (FLC) in that it can take out rules from quantitative data and has a base from which to extract rules extensively.

3.5 Simulation, Result and Discussion

In Matlab/Simulink, the block diagram of the setup built as shown in Figure 3.1 consist of four main sections namely PV module configuration, a DC/DC Boost converter, proposed GA-Trained MPPT model + PWM drive and load section.

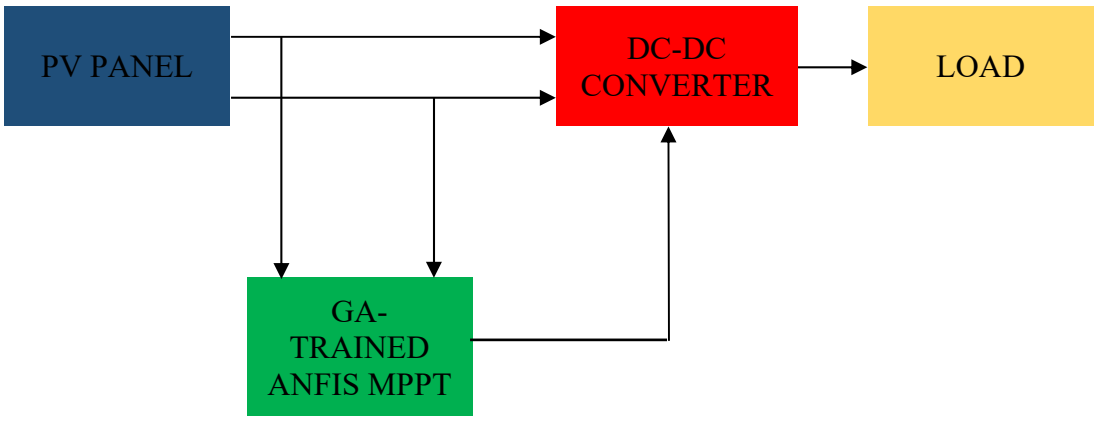

Figure 13. Block Diagram of MATLAB/Simulink Setup.

The PV module is connected to the load via the direct current to direct current boost converter to accomplish maximum power tracking of the PV system by controlling the system transition. Although the panel's current output is non-linear, and the DC/DC circuit is similarly non-linear, both can be considered linear within a minimal time interval. At the point when the resistance of the DC/DC circuit rises to that of the PV cell, the PV cell can acquire its MPPT if the exchanging conductance of the DC/DC converter circuit is changed. Figure 3.2 shows a block schematic of MPPT electronic equipment with GA-trained ANFIS-based control. In the GA-trained ANFIS based control approach, values of Solar irradiance (G) and temperature (T) were used as input values and then fed into the trained model. The output was compared with the

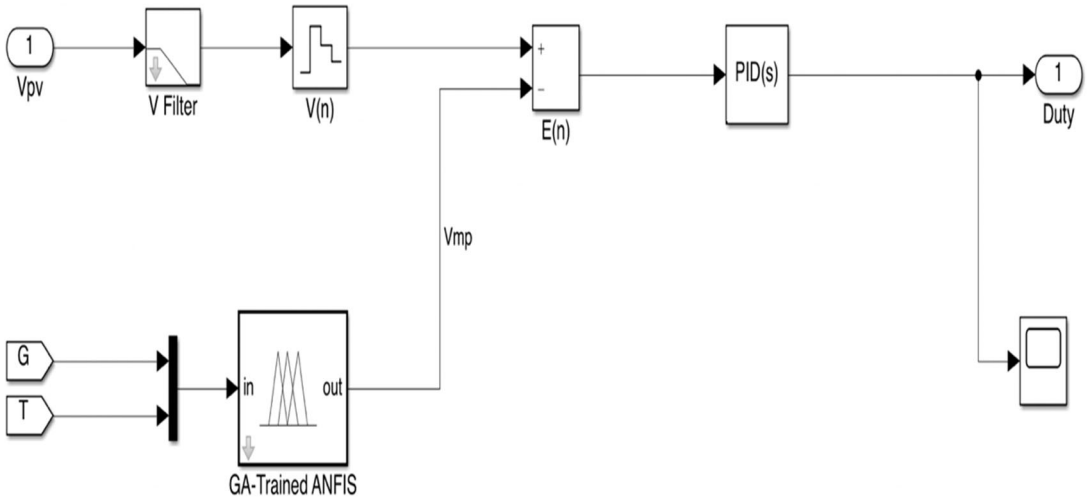

Figure 14 Block diagram of GA-trained ANFIS MPPT Method

measured panel values and provided into the PID as a control parameter in regulating the duty cycle of the DC/DC converter to make the best choices for the system.

Table 3.1 shows the simulations conditions for the three scenarios. The selected characteristics of the PV system have been summarized in Table II to create the Simulink model for the GA-trained ANFIS based MPPT. The system is simulated under three scenarios:

TABLE 3.1: SIMULATION CONDITIONS

Scenarios	**Irradiance**	**Temperature**	**Load**
1	Constant	Constant	Variable
2	Variable	Constant	Constant
3	Constant	Variable	Constant

In all the scenarios, the simulation time was set at 1 second and irradiance values of 200 Watt per meter square, 400 Watt per meter square, 600 Watt per meter square, 800 Watt per meter square and 1000 Watt per meter square. Temperature values

of 15 degree Celsius and 25 degrees Celsius while using resistive loads of R1, R2 and R3 equals 20 ohms, 30 ohms and 40 ohms respectively.

TABLE 3.2 PARAMETERS OF THE PV SYSTEM

Parameters	Numerical Units
Maximum Power	250 W
Open Circuit Voltage	37.3 V
Short Circuit Current	8.66 A
Voltage @ MPP	30.7 V
Current @ MPP	8.15 A
Reference Temperature	25°C

Figure 3.3 indicates that the suggested technique can follow GMPP in 0.003 seconds and even remain stable when there is a sharp shift in load at time intervals of 0.3 and 0.6 seconds. With an efficiency of 99.2 percent in predicting GMPP, the result exhibits little or no fluctuation. In addition, in scenario 2, Figure 3.4, the suggested technique could track GMPP at various levels of change in solar irradiation while being always stable. The impact of temperature change on the maximum power of the PV system and Load Power in scenario 3 is substantially smaller than the impact of irradiance variation as shown in Figure 3.5. Figure 3.6 shows that the approach successfully tracked the GMPP at the PV system's reference temperature without oscillation. When comparing the findings in Figure 3.6 to the results in Figures 3.7, 3.8, and 3.9 for FPA, PSO, and CS, it is evident that the GA-ANFIS technique performed better the others in terms of time series and stability in monitoring GMPP. In addition, when comparing this approach to the convergence time result reported in M. R. Javed et al., [74], GA-trained ANFIS surpasses the ANFIS method.

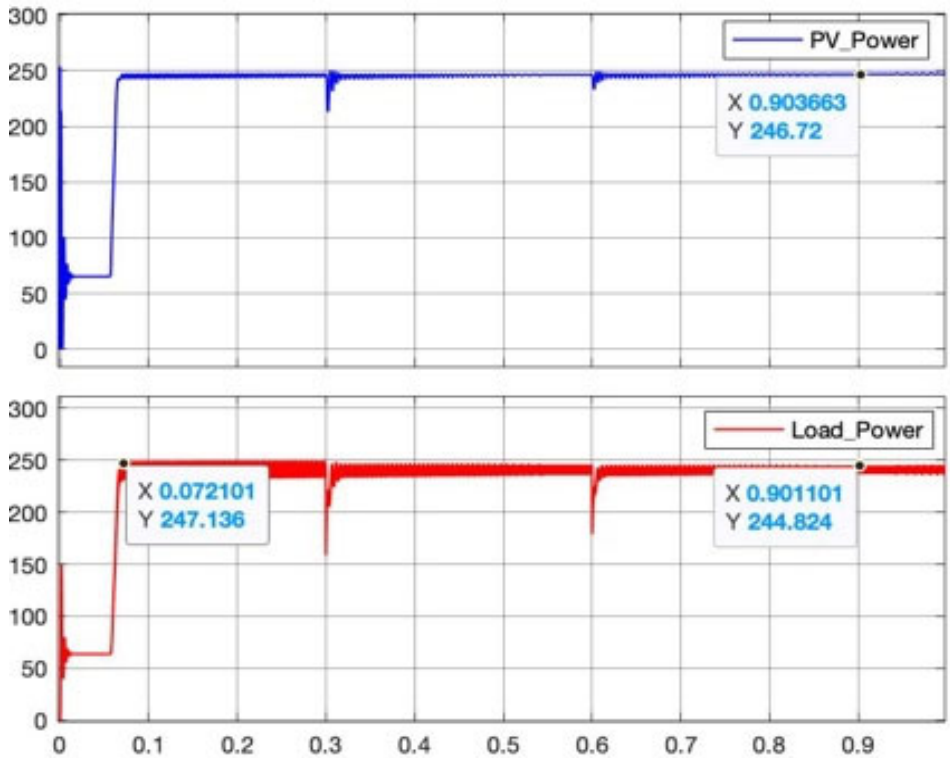

Figure 15. Scope Shot of Scenario 1

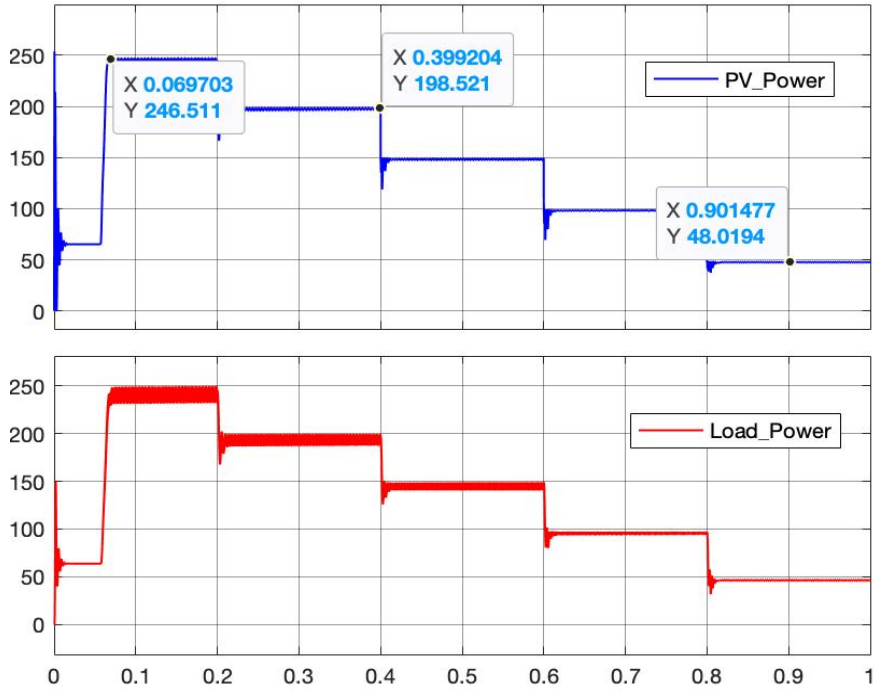

Figure 16. Scope Shot of Scenario 2

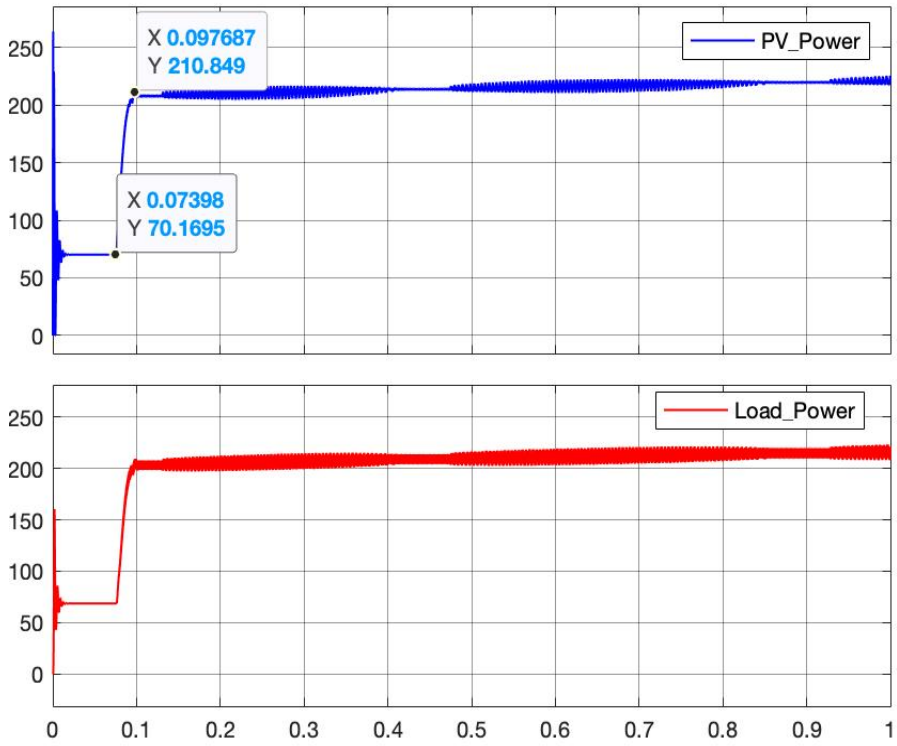

Figure 17. Scope Shot of Scenario 3 at 15°C.

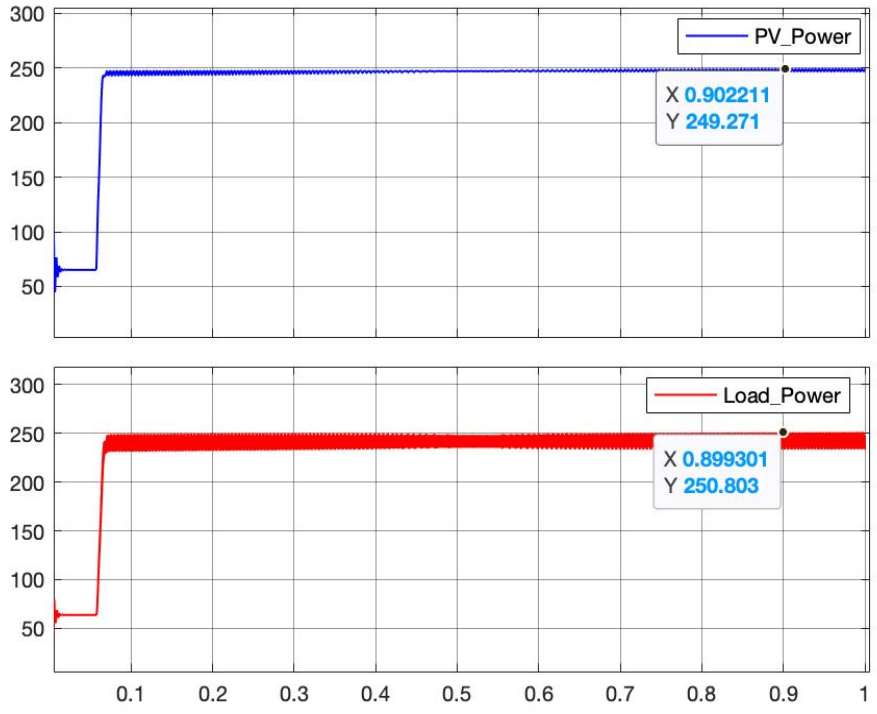

Figure 18. Scope Shot of Scenario 3 at 25°C.

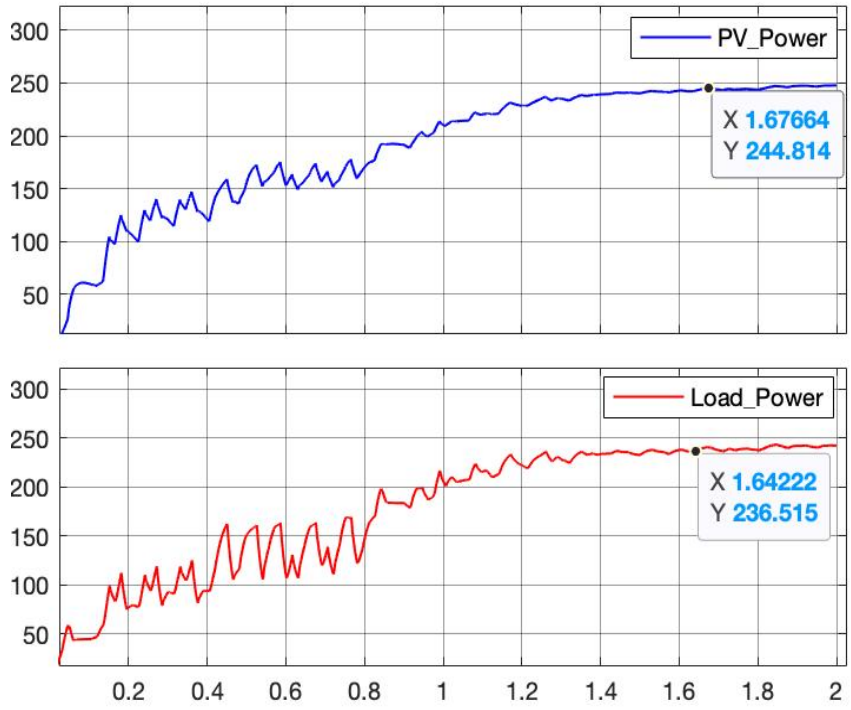

Figure 19. Scope Shot of FPA based on Scenario.

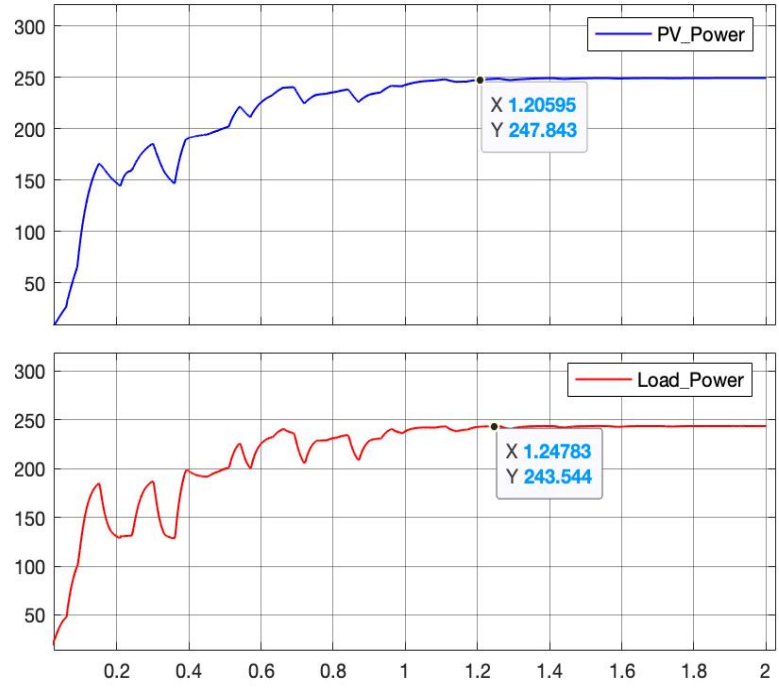

Figure 20. Scope Shot of FPA based on Scenario.

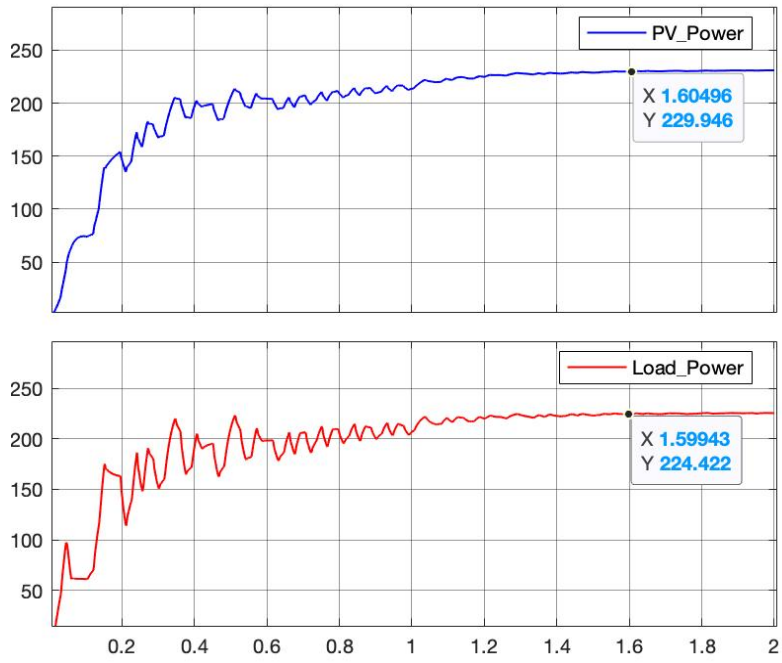

Figure 21. Scope Shot of FPA based on Scenario.

3.9

CHAPTER 4

4. EVALUATION OF HYBRID AI-BASED TECHNIQUES FOR MPPT OPTIMIZATION

4.1 Introduction

In renewable energy research, solar is one of the essential energy sources. In solar energy research, much attention is given to developing photo-voltaic cells, and there is also research in the fuel cell. Still, solar energy is the cheapest in the sense that once the technology is well developed, it is maintenance-free. Nevertheless, unlike conventional power generation plants which can operate unceasingly, solar energy exposes a fluctuating generation profile since its output power varies with respect to temperature of the solar cell and Sunlight intensity. As a result, MPPT is applied to determine the most optimum power spots on the PV solar panel, enabling the DC-DC converter generates the highest amount of electricity possible, regardless of how much sunlight there is. MPPT on PV solar panels is being optimized using various Artificial Intelligence (AI) technologies [1]. Hybrid MPPT incorporates elements from both artificial intelligence (AI) and more conventional methods. In [75], the most recent advancements in AI-based MPPT techniques in solar power systems were discussed in detail including several hybrids AI-based MPPT methods. A hybrid technique based on perturb and observe (P&O) Artificial Neural Network (PO-ANN) and Incremental conductance (INC) Artificial Neural Network (INC-ANN) were developed, and comparative evaluations were done [76]. As a result, an auto encoder (SAE) was trained using a deep learning network using building blocks as an autoencoder to extract the most power from the PV panel. To monitor the Maximum Power Point (MPP) in a stand-alone solar system, Adaptive Neuro-Fuzzy Inference System (ANFIS) was

shown to be beneficial [77]. As part of the demonstration, the incremental conductance approach, the constant voltage method, and the ANFIS-reference model method were all evaluated to see which performed the best. The authors of [78] developed a modified MPPT approach for solar systems in rapidly changing partial shading scenarios. In this approach, genetic and firefly algorithms were integrated into a novel method involving a Differential Evolution (DE). As a result of its cheap cost and ease of implementation, Perturb and Observe (P&O) is a popular MPPT approach. For the MPPT, Fuzzy Logic (FL) is another general approach that significantly improves reaction speed and minimizes variation around the maximum power point. A new MPPT approach based on FL control and the P&O algorithm was provided in this study [79]. The suggested technique includes the benefits of the P&O-MPPT to account for slow and quick variations in solar irradiation and the decreased processing time for the FL-MPPT to solve complicated engineering issues when the membership functions are few. In [80], another hybrid MPPT for PV systems based on a single sensor and adaptive step-size was presented. Methods such as the suggested MPPT approach, which combines open-circuit voltage with an adaptive step-size tracking mechanism, are fast and precise. The MPP tracking was accurate and rapid, according to their simulated findings. Compared to the traditional P&O and INC methods, the technique provides exceptional steady-state and dynamic performance. Using a unique combination of PSO and Salp Swarm Optimization models, this work [81] provided a new technique for tracking the maximum power point and achieving greater efficiency for battery charging. A buck-boost converter was used to feed a load with the highest amount of power possible from the PV array. The standard 'Perturb & Observe' technique was combined with a 'Current Sweep' method in [82] to provide a hybrid approach to MPPT logic control. A counter

was introduced even though the 'Perturb & Observe' method was in the hybrid methodology. Each time the voltage was checked, the counter was increased. The logic component is activated when the counter reaches a certain value. Thus, making it impossible for the logic's "Perturb and Observe" component to end up at the local maximum power point instead of the global maximum power point. Other hybrid AI-based MPPT techniques have been proposed to date [75]. We selected some known performing AI-based MPPT techniques and hybrid them in this work. After that, we evaluated these hybrid techniques for oscillation around the maximum and tracking time. The selected MPPT techniques evaluated here includes PSO trained ANFIS and PSO trained NN MPPT. Lastly, we compared these methods with our proposed AI-based technique, GA-trained ANFIS method from previous work [83].

4.2 Overview of Selected Hybrid MPPT Techniques

There are a wide variety of MPPT methods available. Hybrid Approaches that integrate two or more improved MPPT techniques into a single method have been reported in the literature [84, 85], but we discussed in this research two of the best seen.

4.2.1 Adaptive Neuro-fuzzy Inference System (ANFIS)

ANN and FLC are brought together in ANFIS. The benefit of ANN and FLC are combined in this method. Here, the FLC-based MPPT is powered by the ANN trained to determine the ideal MPP. When it comes to intelligent power management and solar power systems, ANFIS and fuzzy logic is suitable since they are versatile and adaptive [86]. It is used to simulate a fuzzy approach for learning all the information about a dataset. It is a method of transforming a large dataset into a single output from several inputs. ANFIS creates a fuzzy inference system by combining datasets from different

sources. Increasing the solar power system's conversion efficiency has been shown [87].

4.2.2 Particle Swarm Optimization (PSO)

The PSO is an excellent choice in terms of structure, implementation, and calculation speed. It can locate the MPP for any P-V curve independent of environmental fluctuations and track the PV system when the PSO search space and convergence time are lowered. It is also utilized to minimize the steady-state oscillation to almost nil. In an n-dimensional space, this technique involves several cooperating particles. In the initiation position, the particle's Vi (Vi = 0) and Pi (randomly distributed) are both set to 0. Pbest, the particle's current position, and Gbest, the best possible position for all particles currently, affect its current location.

4.2.3 Neural Network

A neural network (NN) is a kind of artificial intelligence technique. In the NN MPPT, solar temperature and irradiance are the inputs. The duty ratio of the DC-DC converter is the goal of the neural network. For any change in solar temperature and irradiance value, neural networks provide a specific duty ratio value to get maximum power. The network is built using a particular algorithm during training [88]. Duties and ANN are trained for various sun irradiance values and temperatures. Adjusting the layer weights to get the desired values is what neural network training entails. Adjustments in weights are made to ensure that the goal values are tracked with little error throughout training.

4.2.4 Genetic Algorithm (GA)

GA is a general AI-based optimization method that can be used to solve a variety of problems. It is widely used in MPPT to modify a population of individual solutions to compute the voltage reference of a PV panel. GA has small oscillations, a fast

convergence speed, and fast dynamics in general when using the voltage-step selection GA algorithm [83,89]. It is a concept based on chromosome evolution. To begin, the initial population is binary encoded and converted to real numbers, and their fitness values for each chromosome are assessed. The genetic operations of selection, crossover, and mutation are carried out to achieve the best possible result, specifically power output maximization. Since GA is based on a significant variation, radial basis function, it is used to learn temperature and irradiance data patterns.

4.3 Simulation, Result and Discussion

In MATLAB/Simulink, the block diagram of the setup built as shown in Figure 4.1, consisting of four main sections namely PV module configuration, a DC/DC Boost converter, proposed GA-Trained MPPT model + PWM drive and load section.

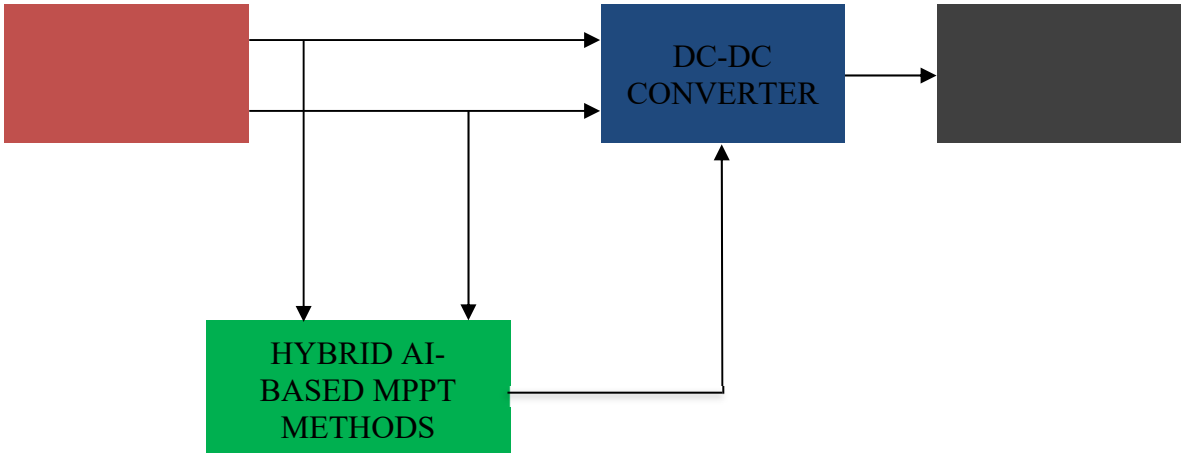

The PV module is connected to the load via the direct current to direct current boost converter to accomplish maximum power tracking of the PV system by controlling the system transitions. Although the panel's current output is non-linear, and the DC/DC circuit is similarly non-linear, both can be considered linear within a minimal time interval. At the point when the resistance of the DC/DC circuit rises to

that of the PV cell, the PV cell can acquire its MPPT if the exchanging conductance of the DC/DC converter circuit is changed.

In all the hybrid techniques evaluated, values of Solar irradiance (G) and temperature (T) were used as input values and then fed into the selected methods. The output was compared with the measured panel values and provided into the PID as a control parameter in regulating the duty cycle of the DC/DC converter to make the best choices for the system. In all the techniques, the simulation time was set at 1 second and irradiance value and temperature values were kept constant at 1000 Watt per meter square and 25 degrees Celsius respectively while using also, a constant resistive load of 40 ohms. Table 4.1 shows the values of the DC/DC Boost converters used in the simulation's setups.

TABLE 4.1 PARAMETERS OF THE DC/DC BOOST CONVERTER

Parameters	**Numerical Units**
Inductor	3m H
Capacitor	100μ F
Diode (Bias Voltage)	0. 8 V
MOSFET (Internal Resistance)	1m Ω

Figure 4.2 indicates that the suggested technique can track MPP in 0.002 seconds and even remain stable when there is a sharp shift in load at time intervals of 0.3 and 0.6 seconds. With an efficiency of over 100 percent, the result exhibits no fluctuation around the maximum as shown in Figure 4.3.

	Value	Time
Max	2.563e+02	2.160e-03
Min	3.330e-20	0.000e+00
Peak to Peak	2.563e+02	
Mean	2.388e+02	
Median	2.413e+02	
RMS	2.392e+02	

Figure 23. Signal Statistics for GA-ANFIS MPPT

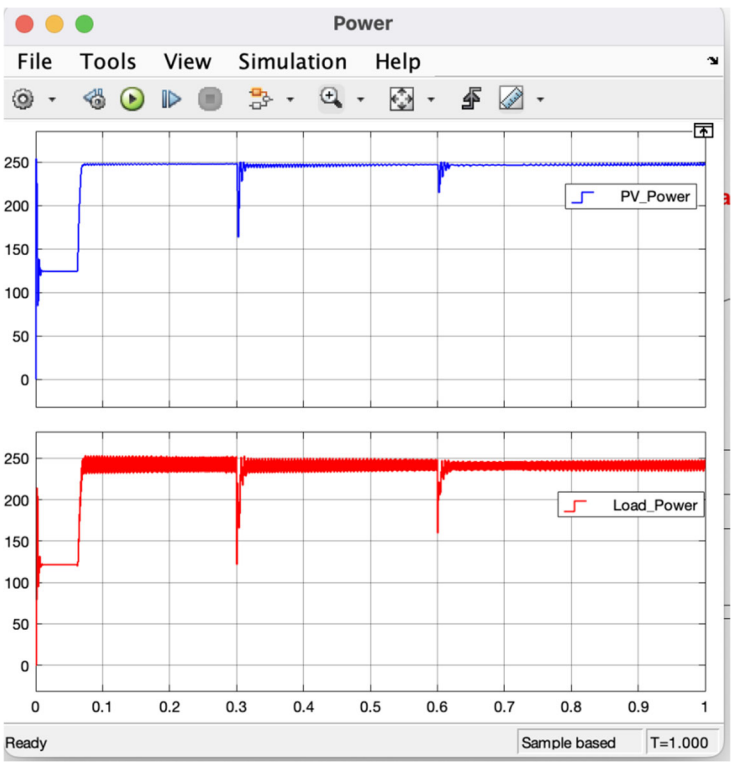

Figure 24 Scope Shot of GA-ANFIS MPPT

In addition, Figure 4.4, the PSO-ANFIS was able to track MPP in 0.074 even with an efficiency of 100 percent as seen in Figure 4.5.

	Value	Time
Max	2.533e+02	0.074
Min	3.329e-20	0.000e+00
Peak to Peak	2.533e+02	
Mean	2.330e+02	
Median	2.407e+02	
RMS	2.349e+02	

Figure 25. Signal Statistics for PSO-ANFIS MPPT

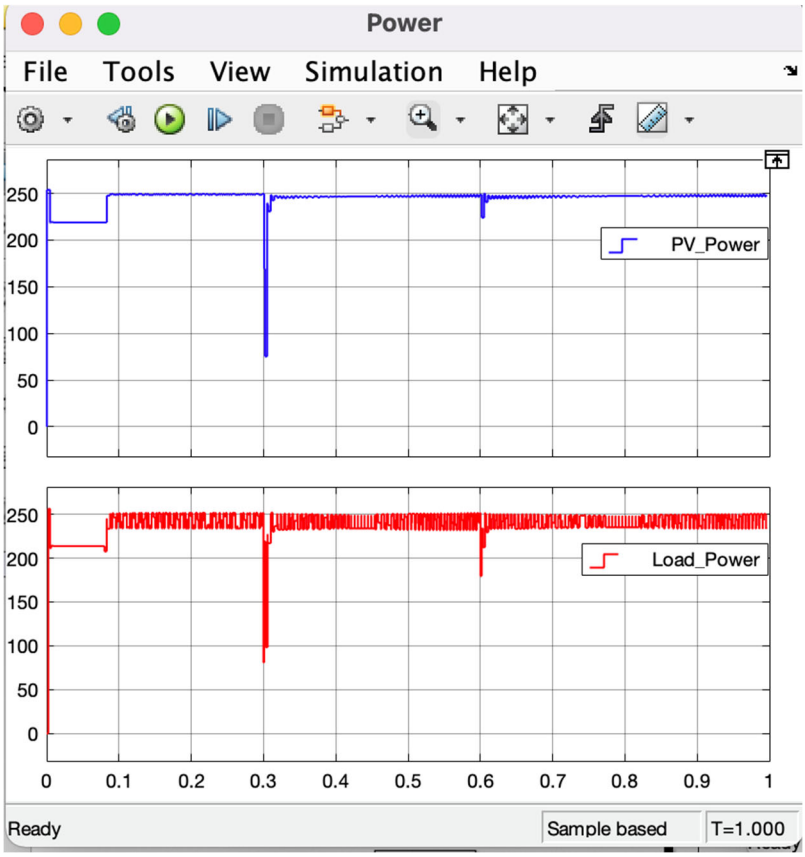

Figure 26. Scope Shot of PSO-ANFIS MPPT

It is obvious from the signal statistics of Figure 4.2, Figure 4.4, and Figure 4.6 that our proposed method still performs better in terms of MPP and tracking time. Although, as shown in Figure 4.7, the PSO-NN presented a stable power output.

	Value	Time
Max	2.460e+02	0.305
Min	0.000e+00	0.000e+00
Peak to Peak	2.460e+02	
Mean	2.322e+02	
Median	2.433e+02	
RMS	2.354e+02	

Figure 27. Signal Statistics for PSO-N

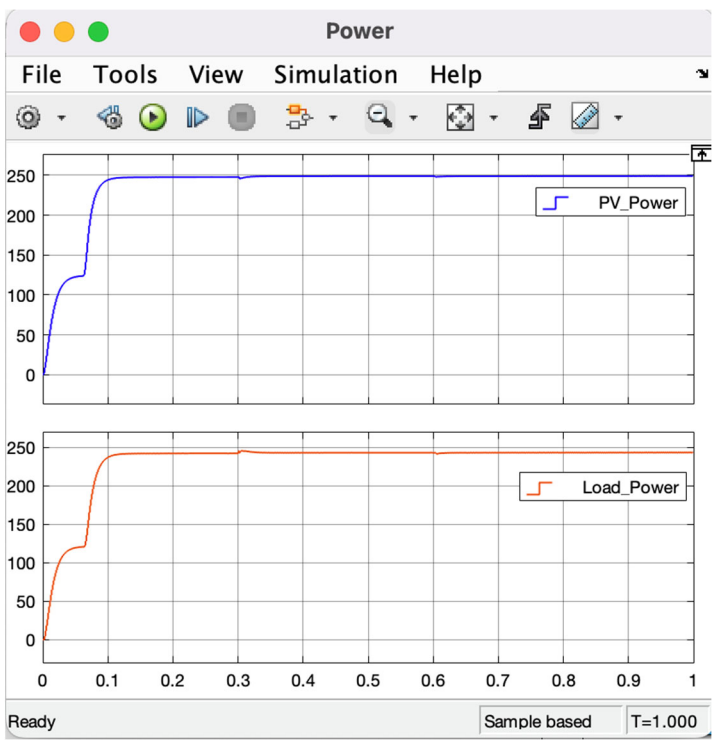

Figure 28. Scope Shot of PSO-NN

CHAPTER 5

5. PERFORMANCE ANALYSIS OF SOLAR ENERGY SYSTEM WITH DIFFERENT DC-DC CONVERTER TOPOLOGIES FOR HYBRID AI-BASED MPPT

5.1 Introduction

The utilization of solar energy is a promising alternative to traditional fossil fuels, and photovoltaic (PV) systems have emerged as a popular method to harness this renewable energy source [90]. To ensure that PV systems operate at their maximum efficiency and power output, maximum power point tracking (MPPT) algorithms must be employed [91]. These algorithms adjust the impedance seen by the solar array to maintain the PV system operating near the peak power point of the panel, even under varying conditions, such as changes in solar irradiance, temperature, and humidity. This results in maximum power output and increases solar energy system efficiency. The choice of DC-DC converter topology is crucial to the performance of MPPT algorithms in PV systems. Numerous converter topologies, such as Boost, Buck, and Buck-Boost, have been proposed in the last two decades to increase the output voltage of PV panels [92]. Additionally, hybrid AI-based MPPT algorithms have been proposed to enhance the accuracy and efficiency of MPPT techniques in changing environmental conditions [93]. These algorithms utilize artificial intelligence (AI) techniques, such as neural networks and fuzzy logic, to optimize the PV system's output. The primary objective of this research effort is to simulate and analyze the performance of a solar energy system with different DC-DC converter topologies for hybrid AI-based MPPT. This research will investigate the suitability of various converter topologies, including Boost, Buck, and Buck-Boost, for different hybrid AI-based MPPT algorithms. A

MATLAB Simulink environment will be employed to analyze the impact of varying solar irradiance and temperature on the solar energy system's performance. Furthermore, three AI-based MPPT algorithms, such as GA-trained ANFIS, PSO-trained NN, and PSO-trained ANFIS MPPTs, will be assessed to determine the most suitable DC-DC converter topology for each algorithm. The value of this research is in its contribution to developing and implementing solar energy systems, promoting sustainable energy solutions, and expanding renewable energy sources. This work presented a literature review on the PV system, MPPT techniques, and DC-DC converters. The research methodology, including the simulation models and parameters employed, will be presented. The results of the simulation and analysis of different DC-DC converter topologies for hybrid AI-based MPPT algorithm's performance will also be discussed.

5.2 Overview of Related Concepts

5.2.1 Solar Energy Systems

Solar energy systems offer a promising and eco-friendly alternative to traditional fossil fuels, with the benefit of being cost-effective. The reduction in the cost of photovoltaic (PV) panels and advancements in solar technology have resulted in a rapid increase in the use of solar energy systems in recent years [94]. Not only are they sustainable and renewable, but they also enhance energy efficiency and reduce greenhouse gas emissions. According to [92], solar energy systems have several advantages over conventional energy sources, such as zero fuel costs, low maintenance requirements, long lifespan, and the ability to be installed in remote and off-grid locations. Also, integrating photovoltaic/thermal hybrid solar technology can increase solar energy systems' overall energy output and efficiency [95]. However, the adoption of solar

energy systems is not without challenges. Environmental factors like temperature and solar irradiance can affect the efficiency of PV panels, and the initial installation cost may be too high for low-income communities, limiting their adoption. [96] highlighted the need for proper planning and policy support to maximize the benefits of solar energy systems in developing countries. To address these issues and enhance the performance of solar energy systems, researchers have been investigating various technologies like MPPT algorithms and DC-DC converters [97]. These technologies can help optimize the output of solar energy systems, making them more efficient and cost-effective. It is crucial to choose the proper MPPT technique for the performance of PV systems [98] and select an appropriate DC-DC converter topology for the MPPT algorithm [99].

5.2.2 Hybrid AI-based MPPT

For photovoltaic (PV) systems operating in various climatic circumstances, hybrid AI-based maximum power point tracking (MPPT) solutions have been proposed to increase MPPT's accuracy and effectiveness. [100,101]. These techniques combine conventional MPPT algorithms with artificial intelligence (AI) techniques, such as neural networks, fuzzy logic, genetic algorithms, and particle swarm optimization, to optimize the performance of the PV system [102,103]. AI-based MPPT algorithms have been shown to reduce steady-state errors, improve convergence speed, and enhance the tracking efficiency of the PV system. Several studies have investigated the effectiveness of AI-based MPPT algorithms in PV systems. For instance, [104] proposed a hybrid MPPT algorithm that combines a fuzzy logic controller with the IC method. The algorithm outperformed conventional MPPT techniques regarding accuracy and efficiency under varying environmental conditions.

Similarly, [105] developed an adaptive MPPT algorithm that uses a neural network to predict the optimal operating voltage of the PV system. The algorithm was shown to improve the tracking accuracy and efficiency of the PV system under partial shading conditions. Another approach to AI-based MPPT is to use machine learning techniques to train the MPPT algorithm. In this regard, a hybrid MPPT algorithm that combines a genetic algorithm with an artificial neural network (ANN) was presented [106]. The algorithm was trained using a dataset of PV system parameters to optimize the performance of the PV system under varying conditions. A survey of recent MPPT techniques for PV systems, including conventional and AI-based methods, was conducted in [107]. The study found that AI-based MPPT techniques generally outperformed traditional approaches regarding efficiency and accuracy.

Overall, MPPT techniques are essential for maximizing PV systems' power output and efficiency. While conventional methods are simple and widely used, AI-based techniques have shown great promise in improving the accuracy and efficiency of MPPT under varying environmental conditions.

5.2.3 DC-DC Converter Topologies

In photovoltaic (PV) systems, DC-DC converters are essential in interfacing the PV panel with the load or grid while maintaining the optimal operating point [108]. Particularly in the context of Maximum Power Point Tracking (MPPT), these converters regulate the output voltage and current from the solar panels to optimize power transfer to the load or battery [109]. Three general DC-DC converter topologies are employed in MPPT systems: Boost, Buck, and Buck-Boost converters [110].

Boost Converters are utilized when the desired output voltage exceeds the input voltage [108]. They comprise an inductor, a capacitor, a diode, and a switch, typically a MOSFET [108], represented in Figure 5.1.

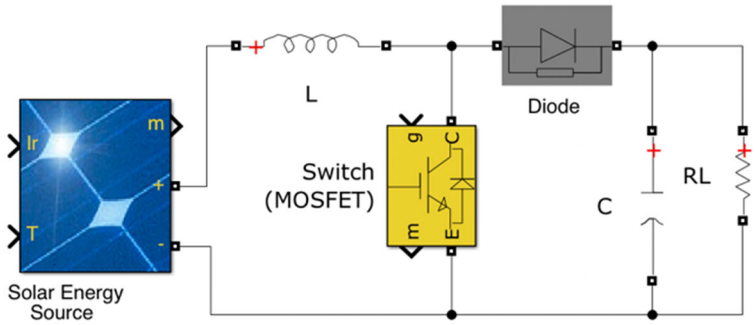

Figure 29 Circuit Diagram for A Boost Converter

These converters are often implemented in MPPT systems when the voltage generated by the solar panel is insufficient for charging the battery or supplying power to the load [110]. By increasing the voltage, boost converters ensure the system operates at the maximum power point [110].

Conversely, Buck Converters are used when the output voltage needed is below the given input voltage. [108]. The primary circuit diagram consists of an inductor, a capacitor, a diode, and a switch, usually a MOSFET [108], as shown in Figure 5.2.

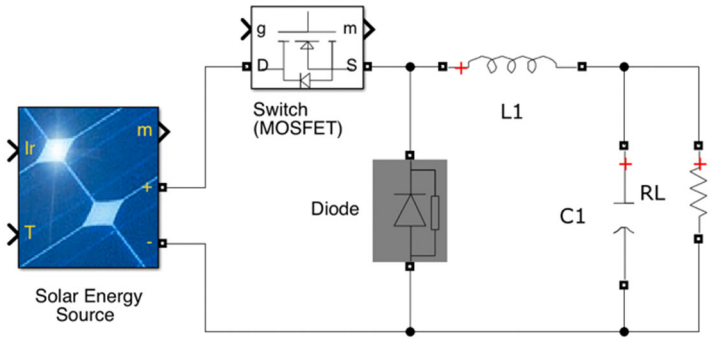

Figure 30. Circuit Diagram for A Buck Converter

They are frequently employed in MPPT systems when the solar panel voltage surpasses the required voltage for charging the battery or powering the load [110]. By reducing the voltage, the buck converter ensures the system functions at its optimal power output. [110].

The Buck-Boost Converter is a hybrid topology that combines the functionalities of both boost and buck converters, enabling it to either increase or decrease the input voltage as required [108]. This converter is particularly advantageous in MPPT systems where the solar panel voltage can exhibit significant fluctuations due to varying sunlight conditions [110]. The buck-boost converter as depicted in Figure 5.3, ensures that the system operates at the maximum power point by adjusting the output voltage to meet the requirements of the load or battery, irrespective of whether the solar panel voltage is higher or lower than the desired voltage [110].

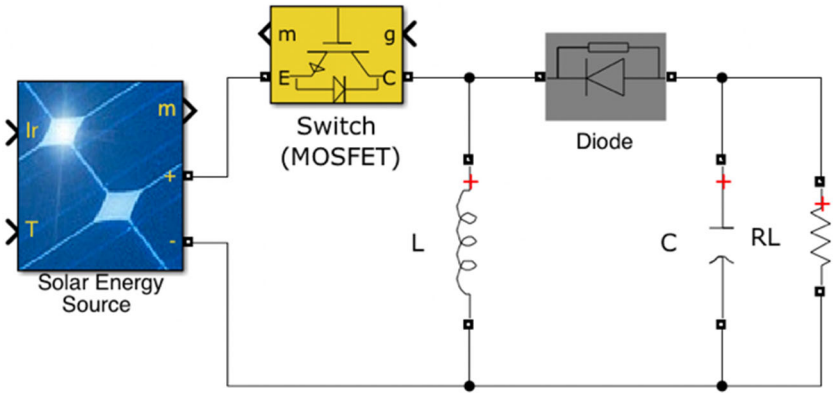

Figure 31. Circuit Diagram for A Buck-Boost Converter

Figure 5.4 and 5.5 shows a typical example of an input-output voltage plot for Buck and Boost Converters and Buck-Boost converters, respectively.

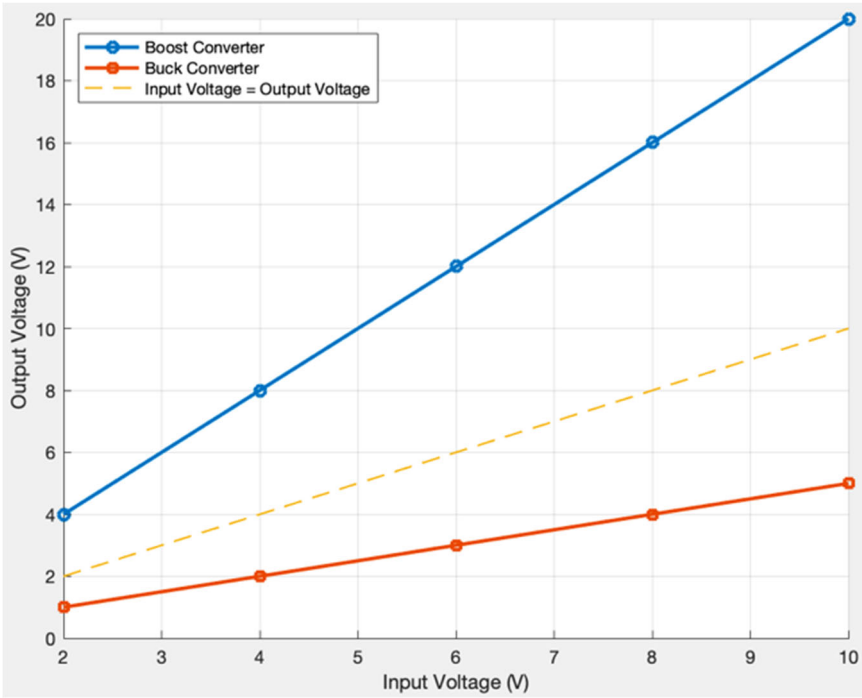

Figure 32. Input-Output Voltage Plot for Boost and Buck Converters

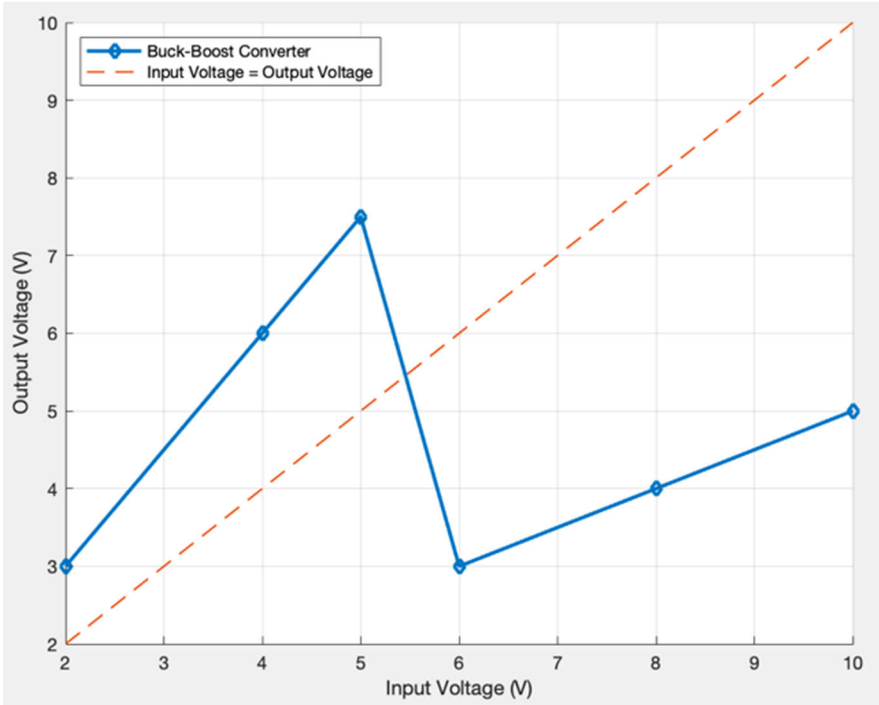

Figure 33. Input-Output Voltage Plot for A Buck-Boost Converter

In Figure 5.4, the boost converter has a voltage gain of 2, meaning that the output voltage is twice the input voltage, while the buck converter has a voltage gain

of 0.5, meaning that the output voltage is half the input voltage. In Figure 5.5, the buck-boost converter has separate regions for stepping up and down the voltage. For input voltages less than 5 V, the output voltage is 1.5 times the input voltage (step-up), while for input voltages greater than or equal to 5 V, the output voltage is 0.8 times the input voltage (step-down). The dashed line represents the point at which the input voltage equals the output voltage. These values are arbitrary and simplified for illustration purposes. In practice, the voltage gains for each type of converter vary depending on factors like component values, converter efficiency, and load requirements.

5.3 Solar Energy System Modelling

5.3.1 System Components and Parameters

In modeling and simulating a solar energy system, it is necessary to establish the governing equations for each of its four components: solar panels, Maximum Power Point Tracking (MPPT) algorithm, DC-DC converters, and loads or batteries.

Solar panels have specific parameters, including the number of cells, open-circuit voltage (Voc), short-circuit current (Isc), and temperature coefficients. The MPPT algorithm typically employs AI-based techniques like fuzzy logic controllers or neural networks [111]. DC-DC converters such as boost, buck, and buck-boost converters have their respective parameters, and loads or batteries have specific voltage and current requirements.

5.3.1.1 Photovoltaic (PV) Module

The single-diode model is the commonly used mathematical representation of a photovoltaic (PV) module [112]. This model considers the nonlinear I-V characteristics of the solar panel and consists of a current source, a diode, a series resistance (Rs), and

a shunt resistance (Rsh). The equation representing the single-diode model is as follows:

$$I = I_{ph} - I_d - I_{sh} \qquad (1)$$

where:

- I is the output current of the PV module.
- I_{ph} is the photogenerated current, which depends on solar irradiance and temperature.
- I_d is the diode current.
- I_{sh} is the shunt current.

The diode current (I_d) can be expressed as:

$$I_d = I_o * (\exp((\mathrm{V} + \mathrm{Rs} * \mathrm{I})/(\mathrm{n} * \mathrm{Vt})) - 1) \qquad (2)$$

where:

- I_o is the diode saturation current, which depends on temperature.
- V is the output voltage of the PV module.
- n is the diode ideality factor (typically between 1 and 2)
- Rs is the series resistance of the photovoltaic module.
- Vt is the thermal voltage, given by $\mathrm{Vt} = \mathrm{k}^* \mathrm{T}/\mathrm{q}$ (k is Boltzmann's constant, T is the cell temperature in Kelvin, and q is the electron charge)

The shunt current (Ish) can be expressed as:

$$I_{sh} = (\mathrm{V} + \mathrm{Rs} * \mathrm{I})/\mathrm{Rsh} \qquad (3)$$

Where Rsh is the shunt resistance of photovoltaic module. Substituting Id and Ish into the initial equation, we get the complete single-diode model equation:

$$I = Iph - 10 * (\exp((\mathrm{V} + \mathrm{Rs} * \mathrm{I})/(\mathrm{n} * \mathrm{Vt})) - 1) - (\mathrm{V} + \mathrm{Rs} * \mathrm{I})/\mathrm{Rsh} \qquad (4)$$

5.3.1.2 DC-DC Converter Parameters

The boost, buck, and buck-boost converters have various parameters that influence their performance, such as inductor and capacitor values and switching frequencies

[113]. The mathematical formulation for these parameters is based on the desired output voltage, input voltage, and load conditions.

Boost Converter:

In the Boost converter, the output voltage is higher than the input voltage, and the duty cycle of the switching signal is determined by Equation (5). The inductor and capacitor values are calculated by Equations (6) and (7), respectively.

$$\text{Duty cycle } (D) = (\text{ Vout - Vin}) \text{ / Vout} \quad (5)$$
$$\text{Inductor value (L)} = (\text{Vin} * \text{D})/(\Delta\text{IL} * \text{fs}) \quad (6)$$
$$\text{Capacitor (Cout)} = (D * \text{Iout })/(\Delta\text{Vout} * \text{fs}) \quad (7)$$

where:

- Vout is the output voltage.
- Vin is the input voltage.
- ΔIL is the inductor current ripple.
- fs is the switching frequency.
- Iout is the output current.
- ΔVout is the output voltage ripple.
- Cout is Output Capacitor.

The inductor current ripple, switching frequency, output current, and output voltage ripple are all factors that affect the component values.

Buck Converter:

In the Buck converter, the output voltage is lower than the input voltage, and the duty cycle is determined by Equation (8). The inductor and capacitor values are calculated by Equations (9) and (10), respectively.

$$\text{Duty cycle } (D) = \text{Vout/Vin} \quad (8)$$
$$\text{Inductor value (L)} = (\text{Vin} * D^{*}(1 - \text{D}))/(\Delta\text{IL} * \text{fs}) \quad (9)$$
$$\text{Capacitor (Cout)} = (\text{Iout} * (1 - D))/(\Delta\text{Vout} * \text{fs}) \quad (10)$$

Also, the inductor and capacitor values also depend on the same factors as in a Boost converter, but the equations have a different form.

Buck-Boost Converter:

In the Buck-Boost converter, the output voltage can be higher or lower than the input voltage, depending on the duty cycle. The duty cycle is determined by Equation (11), and the inductor and capacitor values are calculated by Equations (12) and (13), respectively.

$$\text{Duty cycle (D)} = 1\text{- (Vin / Vout)} \tag{11}$$
$$\text{Inductor value (L)} = (\text{Vin} * \text{Vout})/((\text{Vout}+\text{Vin}) * \Delta\text{IL} * \text{fs}) \tag{12}$$
$$\text{Capacitor (Cout)} = (\text{lout} * \text{D})/(\Delta\text{Vout} * \text{fs}) \tag{13}$$

The inductor and capacitor values depend on factors such as the input and output voltages, switching frequency, and output current.

Overall, the duty cycle equation (Equations (5), (8), and (11)) determines the fraction of time that the switch in the converter is on versus off. By adjusting the duty cycle, the output voltage and current levels can be controlled. Whereas the inductor equation (Equations (6), (9), and (12)) determines the value of the inductor needed for the converter to function correctly. The inductor value determines the rate of change of current and is responsible for storing energy during the on-time of the switch and releasing energy during the off-time. The capacitor equation (Equations (7), (10), and (13)) determines the value of the output capacitor needed to filter the output voltage ripple. The capacitor value determines the energy storage capacity and influences the output voltage ripple.

5.3.1.3 AI-based MPPT

The fundamental equations and concepts for each of the four algorithms used in modeling the AI-based hybrid MPPT techniques for optimizing solar energy systems are presented below. These algorithms include Fuzzy Logic Control (FLC), Particle Swarm Optimization (PSO), Artificial Neural Network (ANN), and Genetic Algorithm

(GA). Each algorithm was modeled using corresponding equations in the solar energy system optimization context. In addition to the equations, modeling these algorithms in MATLAB involves several steps, including initialization, iteration, and termination.

i. Fuzzy Logic Control (FLC)

FLC is a control strategy that uses linguistic variables and fuzzy sets to model and solve complex problems [113]. It adjusts the duty cycle based on input variables such as the change in power (ΔP) and voltage (ΔV).

Fuzzification: define membership functions for input variables ΔP and ΔV:

$$\mu\_A(x) = (x - a) / (b - a), \text{ for } a \leq x \leq b \quad (14)$$

$$\mu\_A(x) = (c - x) / (c - b), \text{ for } b \leq x \leq c \quad (15)$$

- x: input variable (ΔP or ΔV)
- a, b, c: parameters defining the shape of the membership function.

Equations (14) and (15) are used to define the membership functions in fuzzy logic control. A membership function is a mathematical function that maps input values to fuzzy sets. Equation (14) defines the membership function for an input variable x within the range of a to b. It linearly maps the input value x to a fuzzy set with a membership value that varies from 0 to 1. Parameter a represents the lower limit of the fuzzy set, while b represents the upper limit.

Equation (15) defines the membership function for an input variable x within the range of b to c. Like Equation (14), it linearly maps the input value x to a fuzzy set with a membership value that varies from 0 to 1. Parameter b represents the lower limit of the fuzzy set, while c represents the upper limit. However, in this case, the mapping is inverted compared to Equation (14), resulting in a fuzzy set that is high near c and low near b. These membership functions are used to determine the degree of activation

of each rule in the fuzzy logic controller based on the input values. This is then used to determine the output value using the centroid method in Equation (16).

Defuzzification: Compute the output value ΔD using centroid method:

$$\Delta D = \Sigma(\mu\_Bi(x) * x) / \Sigma(\mu\_Bi(x)) \quad (16)$$

- μ_Bi(x): membership function value of the output variable (ΔD) for each rule i
- x: output variable (ΔD)

ii. Particle Swarm Optimization (PSO)

PSO is a population-based optimization algorithm inspired by the social behavior of birds flocking or fish schooling [114]. PSO optimizes the duty cycle to maximize the power output.

Update the position (D) and velocity (v) of each particle i:

$$v\_i(k+1) = w*v\_i(k)+c1*rand() *(p\_best\_i(k)-D\_i(k))+c2 * rand()*(g\_best(k) -D\_i(k)) \quad (17)$$

$$D\_i(k+1) = D\_i(k) + v\_i(k+1) \quad (18)$$

- i: index of the particle
- k: current iteration
- w: inertia weight
- c1, c2: acceleration constants
- rand (): random number between 0 and 1
- p_best_i(k): personal best position of particle i
- g_best(k): global best position of the swarm

Equation (17) and (18) describe the update rules for the position and velocity of each particle in the particle swarm optimization (PSO) algorithm. In PSO, a swarm of particles is initialized with random positions and velocities in the search space. Each particle represents a candidate solution to the optimization problem, and its position in the search space corresponds to a particular duty cycle value.

In equation (17), the velocity of each particle is updated based on its current velocity, its best position found so far (p_best), and the best position found by the

swarm (g_best). The inertia weight w controls the trade-off between the particle's current velocity and its previous velocity. The parameters c1 and c2 are the acceleration constants that control the influence of the personal best position and the global best position on the particle's movement. The function rand() generates a random number between 0 and 1, and the update equation computes the new velocity of the particle at the next iteration. Whereas Equation (18) is the update rule for the position of each particle in the PSO algorithm. It is used to calculate the new duty cycle value for each particle in the swarm based on its previous position and velocity. The new duty cycle value is then evaluated to determine if it is a better solution than the particle's current best position (p_best) and the swarm's global best position (g_best). The equation calculates the new duty cycle value (D_i(k+1)) by adding the velocity of the particle (v_i(k+1)) to its current position (D_i(k)). This new duty cycle value will then be used in the next iteration of the algorithm. The velocity of each particle is updated based on the inertia weight (w), acceleration constants (c1 and c2), and random values generated by the algorithm (rand()).

In the context of MPPT, let V be the voltage, I be the current, and P be the power at a given point in time. Let V_MPPT, I_MPPT, and P_MPPT be the optimal voltage, current, and power at the maximum power point, respectively. Then, using the PSO algorithm equations (17) and (18), the voltage and current values can be updated as follows:

V_i(k+1) = w * V_i(k) + c1 * rand() * (V_pbest_i - V_i(k)) + c2 * rand() * (V_gbest - V_i(k)) (17a)

I_i(k+1) = w * I_i(k) + c1 * rand() * (I_pbest_i - I_i(k)) + c2 * rand() * (I_gbest - I_i(k)). (17b)

where V_pbest_i and I_pbest_i are the personal best voltage and current values for particle i, V_gbest and I_gbest are the global best voltage and current values for the

entire swarm, respectively, and rand() is a random number between 0 and 1. Using these updated values, the updated power can be calculated as:

$$P\_i(k+1) = V\_i(k+1) * I\_i(k+1) \quad (18a)$$

Finally, the power values for all particles in the swarm are compared to determine the optimal voltage and current values for MPPT:

$$\left.\begin{array}{l} \text{if } (P\_i(k+1) > P\_pbest\_i): \\ \quad P\_pbest\_i = P\_i(k+1) \\ \quad V\_pbest\_i = V\_i(k+1) \\ \quad I\_pbest\_i = I\_i(k+1) \end{array}\right\} \quad (18b)$$

$$\left.\begin{array}{l} \text{if } (P\_pbest\_i > P\_gbest): \\ \quad P\_gbest = P\_pbest\_i \\ \quad V\_gbest = V\_pbest\_i \\ \quad I\_gbest = I\_pbest\_i \end{array}\right\} \quad (18c)$$

Where P_pbest_i, V_pbest_i, and I_pbest_i are the personal best power, voltage, and current values for particle i, P_gbest, V_gbest, and I_gbest are the global best power, voltage, and current values for the entire swarm, respectively.

iii. Artificial Neural Network (ANN)

ANNs are computational frameworks that draw inspiration from the organization and functionality of biological neural networks [115]. In solar energy systems, ANNs are employed to model the associations between input variables, such as solar irradiance and temperature, and output variables, like power output. Feedforward equation for the ANN with input x, weights w, biases b, and activation function f: $y = f(w * x + b)$

(19)

- x: input variable (solar irradiance, temperature)
- w: weights of the neural network connections
- b: biases of the neurons
- f: activation function (sigmoid)

Equation (19) represents the core equation used in ANNs to predict the output variable based on the input variables and the learned parameters of the network. The input variable x is multiplied by the weights of the neural network connections (represented by w). Then the biases of the neurons (represented by b) are added to the product. This result is then passed through an activation function represented by f. The output of the activation function is denoted by y. The weights and biases of the neural network are the parameters that the algorithm learns during the training phase. The algorithm iteratively adjusts the weights and biases to minimize the difference between the actual and predicted outputs.

The predicted output value generated by the ANN, represented by ŷ, can be compared to the actual output value y using the mean squared error (MSE) in Equation (20). The MSE represents the average squared difference between the predicted and actual output values in a dataset, normalized by the total number of data points. By minimizing the MSE by adjusting the weights and biases of the ANN, the network can learn to make more accurate predictions of the output variable. This process is known as training the network, and it can improve the model's accuracy when applied to new data.

Mean Squared Error (MSE):

$$MSE = \Sigma (y - \hat{y})^2 / N \qquad (20)$$

- y: actual output value (target)
- ŷ: predicted output value generated by the ANN
- N: total number of data points in the dataset

- Σ: summation symbol

iv. Genetic Algorithm (GA)

GAs are evolutionary optimization algorithms that use principles of natural selection and genetics to find the optimal solution [116]. GA optimizes the duty cycle to maximize the power output.

Fitness function F for each duty cycle value D:

$F(D) = P\_in(D) = V\_in(D) * I\_in(D)$ (21)

- D: duty cycle value
- P_in(D): input power for the given duty cycle value D
- V_in(D): input voltage for the given duty cycle value D
- I_in(D): input current for the given duty cycle value D.

5.4 Implementation, Results and Analysis

A simulated solar energy system using MATLAB Simulink was built. This environment as depicted in Figure 5.6 allowed for analyzing the performance of the Buck, Boost, and Buck-Boost converter topologies under fixed and varying solar irradiance and temperature conditions.

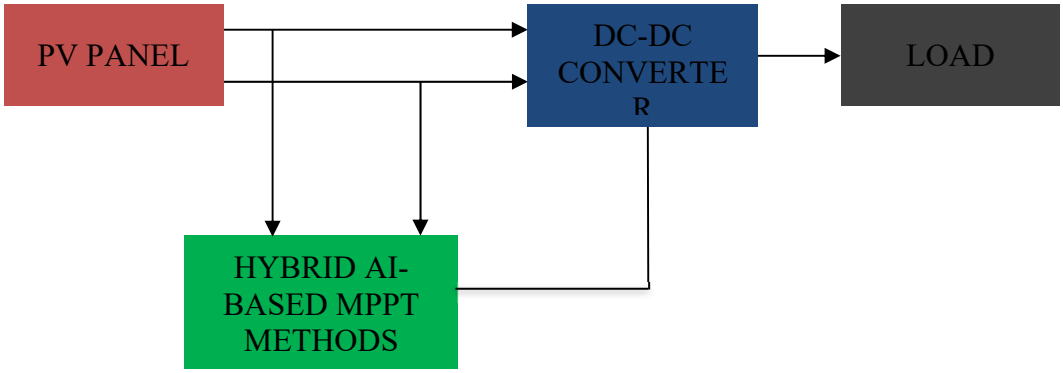

Figure 34 Block Diagram of MATLAB/Simulink Setup

The three AI-based MPPT algorithms - GA-trained ANFIS (Genetic Algorithm trained Adaptive Neuro-Fuzzy Inference System), PSO-trained NN (Particle Swarm Optimization trained Neural Network), and PSO-trained ANFIS were modeled as

shown in the block diagram in Figure 5.7 and integrated into the solar energy system model. The implementation steps in Figure 5.7 for each Algorithm are similar, with minor differences in the optimization techniques and model structures.

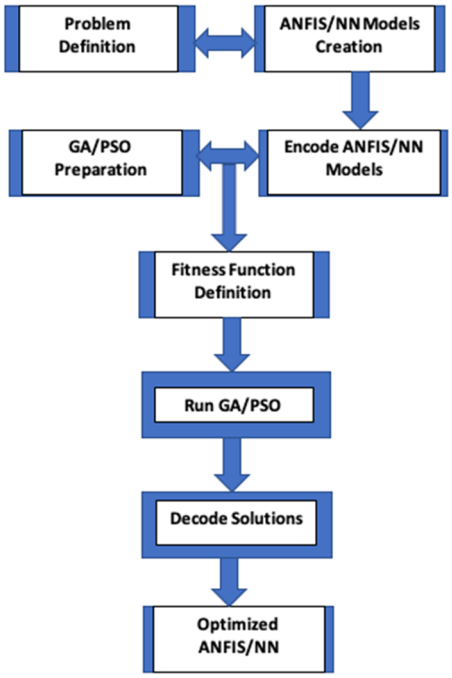

Figure 35 Implementation Steps for Algorithm Setup

In defining the optimization problem, the goal was to optimize the parameters of the three hybrid AI-based MPPT algorithms to enhance the solar energy system's performance. The input variables were solar irradiance and temperature, while the output variable was the MPPT's duty cycle. The objective function aimed to minimize the error between the predicted and actual outputs. In creating the models for the GA ANFIS and PSO-ANFIS, MATLAB's Fuzzy Logic Toolbox was utilized to design initial ANFIS models with membership functions and rule bases. In contrast, MATLAB's Neural Network Toolbox was employed for the PSO-NN model to create an initial neural network with a suitable architecture. Each model was saved in a format

suitable for further processing. In preparing the optimization algorithms for the GA-ANFIS model, Genetic Algorithm (GA) was set up using MATLAB's Global Optimization Toolbox. For the PSO-ANFIS and PSO-NN models, custom MATLAB functions were written to set up the Particle Swarm Optimization (PSO) algorithm. Essential parameters were defined, such as population, crossover and mutation rates for GA, inertia weight, cognitive coefficients, and maximum iterations for PSO.

In encoding the models, custom MATLAB functions were also developed to convert the model parameters of the GA-ANFIS, PSO-ANFIS, and PSO-NN models into formats that could be used as input for their respective optimization algorithms, including defining fitness functions for each Algorithm to evaluate the performance of the corresponding model for each Algorithm to obtain the performance metric. The Genetic Algorithm for GA-ANFIS and the Particle Swarm Optimization for PSO-ANFIS and PSO-NN were executed using the custom MATLAB functions and toolboxes, incorporating the defined fitness functions and optimization parameters.

The optimization algorithms refined the solutions representing the model parameters. After the optimization algorithms converged, the best solutions were decoded back into the optimized model parameters for GA-ANFIS, PSO-ANFIS, and PSO-NN. The models are then updated with these new parameters, resulting in optimized hybrid AI-based MPPT algorithms for the solar energy system. After successfully developing the optimized GA-ANFIS, PSO-ANFIS, and PSO-NN hybrid AI-based MPPT algorithms for the solar energy system, the models were paired with the appropriate DC-DC converter topology.

In all the techniques and DC-DC converter topologies, the simulation time was set at 1 second of simulation time and irradiance value was varied and temperature

values were kept constant at 25 degrees Celsius respectively while using also, a constant resistive load of 40 ohms.

Table 5.1, 5.2, and 5.3 summarizes the simulation results obtained for GA-ANFIS, PSO-ANFIS, and PSO-NN based on Boost, Buck, and Buck-Boost converter topologies. The simulation results in Tables 5.3, 5.4, and 5.5 provide valuable insights into the efficiency and performance of the different converter topologies in solar energy systems employing hybrid AI-based MPPT techniques. For the results in Table 5.1, the solar irradiance and temperature were kept constant while varying the load at the output of the converters. The Performance ratio values given in Table 5.1 is the ratio of the actual output power seen at the load point of the PV system to the PV power (that is, power generated by the solar panel) if the system operates at its maximum rated power output under standard test conditions. The performance ratio measures the performance of the solar PV system relative to the MPPT technique and the type of DC/DC converter topology used.

TABLE 5.1: POWER OUTPUT & PERFORMANCE VALUES AT CONSTANT IRRADIANCE

At Constant irradiance & Temperature	Boost Converter			Buck Converter			Buck-Boost Converter		
	PV Power (W)	Power Output (W)	Performance Ratio (%)	PV Power (W)	Power Output (W)	Performance Ratio (%)	PV Power (W)	Power Output (W)	Performance Ratio (%)
GA-ANFIS MPPT	250	250	100	225	225	100	250	240	96
PSO-ANFIS MPPT	247	243	98	223	223	100	245	236	96
PSO-NN MPPT	248	249	100	223	223	100	147	137	93

The results shown in Table 5.2 were also obtained while varying the load and solar irradiance, but the temperature value was kept constant.

TABLE 5.2: POWER OUTPUT VALUES AT VARYING IRRADIANCE

At Varying Irradiance & Constant Temperature	Boost Converter Power Output (W)			Buck Converter Power Output (W)			Buck-Boost Converter Power Output (W)		
	GA-ANFIS	PSO-ANFIS	PSO-NN	GA-ANFIS	PSO-ANFIS	PSO-NN	GA-ANFIS	PSO-ANFIS	PSO-NN
200	48	45	14	16	16	17	45	43	28
400	96	94	59	53	60	62	92	93	102
600	145	144	131	135	133	133	142	139	124
800	198	203	193	201	200	202	191	188	131
1000	253	243	249	225	223	223	240	236	137

Table 5.3 shows the various response times and slew rates for converter topologies with corresponding hybrid AI-based MPPT techniques under varying solar irradiance and load conditions.

The response time and slew rate are used to characterize the performance of the systems, as they describe the speed at which a system can respond to rapid changes in input signals [117]. The response time in the simulation measures the time it takes for the voltage transition to occur to a higher level based on the changes from both the input and output of the system. A lower time indicates a faster response and determines the system's ability to accurately capture and display fast-changing signals. The Slew rate, on the other hand, measures the maximum speed at which the system's output voltage can change with respect to time. It is usually expressed in units of volts per millisecond (V/ms) [118]. A higher slew rate indicates the system can handle faster input signal changes.

TABLE 5.3: RESPONSE TIME AND SLEW RATE VALUES

At varying Irradiance & Constant Temperature	Boost Converter		Buck Converter		Buck-Boost Converter	
	Response Time (s)	Slew Rate (V/ms)	Response Time (s)	Slew Rate (V/ms)	Response Time (s)	Slew Rate (V/ms)
GA-ANFIS MPPT	0.2	620	0.2	530	0.2	410
PSO-ANFIS MPPT	0.4	290	0.6	280	0.6	263
PSO-NN MPPT	0.6	270	0.6	280	0.4	213

According to the results, the Boost converter emerged as a superior topology compared to the Buck and Buck-Boost converters for several reasons:

i. Improved efficiency: The Boost converter demonstrated higher efficiency in the simulations, primarily due to its voltage step-up capability and ability to minimize energy losses in the system. This characteristic is crucial in maximizing the solar energy system's power output and overall performance.

ii. Adaptability to varying conditions: The Boost converter's ability to maintain a consistent output voltage, despite fluctuating solar irradiance and temperature conditions contributed to its enhanced performance with hybrid AI-based MPPT techniques. This adaptability ensures the system operates close to the maximum power point, optimizing energy conversion and power output.

iii. Compatibility with hybrid AI-based MPPT algorithms: The Boost converter's performance characteristics, such as its voltage regulation capabilities, make it highly compatible with the hybrid AI-based MPPT algorithms tested in the simulations. This compatibility allows the AI algorithms to optimize power extraction and adapt more quickly to changing solar conditions, enhancing the system's performance.

The simulation results underscore the benefits of employing a Boost converter topology in solar energy systems utilizing hybrid AI-based MPPT techniques. Nevertheless, it is crucial to emphasize that the converter selection must be customized to the specific needs and limitations of the solar energy system being considered, as various factors may impact the ideal choice of the converter.

CHAPTER 6

6. CONCLUSION AND RECOMMENDATIONS

6.1 Conclusions

In this dissertation, we have presented, implemented, and analyzed AI-based MPPT techniques for solar energy applications. Existing AI-based Maximum Power Point Tracking (MPPT) methods use sensory data, such as solar irradiance, input voltage, and current measurements, to predict and estimate the Global Maximum Power Point (GMPP) along the non-linear P-V curve, overcoming the limitations of traditional MPPT techniques. Under varying environmental conditions, solar irradiance and cell temperature are critical meteorological parameters that directly influence a solar power system's Maximum Power Points (MPPs).

We have discussed the fundamental concepts of MPPT and compared various high-performing AI-based MPPT algorithms for GMPP estimation. Following this analysis, we investigated a Genetic Algorithm (GA) trained Adaptive Neuro-Fuzzy Inference System (ANFIS). This approach was modeled and simulated using Simulink, showcasing its accuracy and reliability in estimating GMPP under a range of solar irradiance and PV cell temperature values. Although AI-based MPPT algorithms offer faster convergence times, reduced steady-state oscillations, and higher efficiency, they require significant processing power and can be challenging to implement.

Hybrid AI-based MPPT techniques provide an optimal balance between performance and complexity, merging the advantages of traditional and AI-based MPPT methods. However, selecting the appropriate hybrid MPPT technique is challenging due to the pros and cons of each method. We evaluated PSO-trained

ANFIS and NN MPPT techniques to verify the proposed approach's performance and compared them with the GA-trained ANFIS method. The simulation findings revealed that the GA-ANFIS approach displayed remarkable tracking speed and stability.

Additionally, we investigated the suitability of Buck, Boost, and Buck-Boost converter topologies for hybrid AI-based MPPT in solar energy systems under varying solar irradiance and temperature conditions. Through extensive analysis and simulations in MATLAB Simulink, we assessed the performance of three AI-based MPPT algorithms: GA-trained ANFIS, PSO-trained NN, and PSO-trained ANFIS MPPTs, determining the most appropriate DC-DC converter topology for each algorithm.

The research findings underscored converter topology's influence on solar energy systems' performance using hybrid AI-based MPPT algorithms. While the Boost converter offers benefits in specific scenarios, such as voltage step-up capability and high efficiency, the choice of an ideal converter topology ultimately depends on the individual requirements and constraints of the solar energy system under consideration. This work is a valuable reference for future research in solar power generation, emphasizing the importance of carefully selecting the converter topology and AI-based MPPT algorithm to optimize system performance and maximize power output.

6.2 Further Research Recommendations

Based on the findings of this research, several avenues for future research have been identified to advance further the field of AI-based MPPT techniques for solar energy applications:

i. Environmental factors: Investigate the impact of factors such as dust accumulation or module degradation on AI-based MPPT algorithm performance and develop strategies to mitigate these effects for optimal power output.

ii. Scalability and adaptability: Examine the scalability of AI-based MPPT techniques for large-scale solar power plants, assess their suitability for commercial applications, and explore adaptability to different system sizes and configurations.

iii. Integration with innovative grid technologies: Investigate integrating AI-based MPPT algorithms with smart grid technologies to optimize power generation, distribution, and utilization, enabling a more dynamic and efficient renewable energy infrastructure.

iv. Hybrid renewable energy systems: Explore the application of AI-based MPPT algorithms in hybrid systems that combine solar power with other renewable energy sources, such as wind or hydro, to improve overall system performance, stability, and reliability.

v. Energy consumption and computational requirements: Assess the energy usage and computational demands of AI-based MPPT techniques, identifying strategies to reduce energy consumption and complexity without sacrificing performance.

vi. Solar-powered devices and vehicles: Examine the potential of AI-based MPPT algorithms for improving the performance of solar-powered electric vehicles or portable devices, promoting the broader adoption of clean energy technologies across various sectors.

These recommendations provide a roadmap for future research, offering potential directions for expanding the knowledge and understanding of AI-based MPPT techniques in solar energy applications. By addressing these areas, researchers can contribute to developing more efficient, reliable, and sustainable solar energy systems, fostering the widespread adoption of renewable energy solutions.

REFERENCES

[1] Kryukov, K.V. ; Valiev, M.M., "Residential Photovoltaic Power Conditioning System with Module Integrated DC-DC Converters," 15th Power Electronics and Motion Control Conference (EPE/PEMC), 2012, pp. DS3b.9-1 - DS3b.9-4.

[2] Chaouachi, A., Kamel, R.M. and Nagasaka, K. (2010) A Novel Multi-Model Neuro-Fuzzy-Based MPPT for ThreePhase Grid-Connected Photovoltaic System. Solar Energy, 84, 2219-2229.

[3] Faiza Belhachat, Cherif Larbes, A review of global maximum power point tracking techniques of photovoltaic system under partial shading conditions, Renewable and Sustainable Energy Reviews, Volume 92, 2018, Pages 513-553, ISSN 1364-0321,

[4] Femia, N.; Petrone, G.; Spagnuolo, G.; Vitelli, M. Optimization of Perturb and Observe Maximum Power Point Tracking Method. IEEE Trans. Power Electron. 2005, 20, 963–973. [Google Scholar] [CrossRef]

[5] Hussein, K.H.; Muta, I.; Hoshino, T.; Osakada, M. Maximum photovoltaic power tracking: An algorithm for rapidly changing atmospheric conditions. IEE Proc. Gener. Transm. Distrib. 1995, 142, 59–64. [Google Scholar] [CrossRef]

[6] Cheng, P.-C.; Peng, B.-R.; Liu, Y.-H.; Cheng, Y.-S.; Huang, J.-W. Optimization of a Fuzzy-Logic-Control-Based MPPT Algorithm Using the Particle Swarm Optimization Technique. Energies 2015, 8, 5338–5360. [Google Scholar] [CrossRef]

[7] Liu, C.-L.; Chen, J.-H.; Liu, Y.-H.; Yang, Z.-Z. An Asymmetrical Fuzzy-Logic-Control-Based MPPT Algorithm for Photovoltaic Systems. Energies 2014, 7, 2177–2193. [Google Scholar] [CrossRef]

[8] Mamarelis, E.; Petrone, G.; Spagnuolo, G. Design of a Sliding-Mode-Controlled SEPIC for PV MPPT Applications. IEEE Trans. Ind. Electron. 2014, 61, 3387–3398. [Google Scholar] [CrossRef]

[9] Ma, S.; Chen, M.; Wu, J.; Huo, W.; Huang, L. Augmented Nonlinear Controller for Maximum Power-Point Tracking with Artificial Neural Network in Grid-Connected Photovoltaic Systems. Energies 2016, 9, 1005. [Google Scholar] [CrossRef]

[10] Boualem Bendib, Hocine Belmili, Fateh Krim,A survey of the most used MPPT methods: Conventional and advanced algorithms applied for photovoltaic systems, Renewable and Sustainable Energy Reviews, Volume 45, 2015, Pages 637-648, ISSN 1364-0321,

[11] Xia Q (2012) Solar photovoltaic system modeling and control.

[12] Kobayashi K, Takano I, Sawada Y. A study on a two-stage maximum power pointtracking control of a photovoltaic system under partially shaded insolation conditions. IEEE Power Eng. Soc. Gen. Meet 2003:2612–7

[13] M Seyedmahmoudian, R Rahmani, S Mekhilef, AM Oo, A Stojcevski, TK Soon,AS Ghandhari, Simulation and hardware implementation of new maximum power point tracking technique for partially shaded PV system using hybrid DEPSO method, IEEE transactions on sustainable energy 6 (2015) 850–862.

[14] Goud, J.S., R., K., Singh, B. and Kumar, S. (2018), Maximum power point tracking technique using artificial bee colony and hill climbing algorithms during mismatch insolation conditions on PV array. IET Renewable Power Generation, 12: 1915-1922. https://doi.org/10.1049/iet-rpg.2018.5116

[15] Jeddi N, Ouni LEA (2014) Comparative study of MPPT techniques for PV control systems. In: 2014 international conference on electrical sciences and technologies in Maghreb (CISTEM). IEEE, pp 1–7

[16] "Maximum Power Point Tracking". *zone.ni.com*. Zone.ni.com. Retrieved 5-22-2021.

[17] Ishaque K, Salam Z, Lauss G (2014) The performance of perturb and observe and incremental conductance maximum power point tracking method under dynamic weather conditions. Appl Energy 119:228–236

[18] L.Saleh, Ameer & Obed, Adel & Hassoun, Zainab & Yaqoob, Salam. (2020). Modeling and Simulation of A Low-Cost Perturb& Observe and Incremental Conductance MPPT Techniques In Proteus Software Based on Flyback Converter. IOP Conference Series: Materials Science and Engineering. 881. 10.1088/1757-899X/881/1/012152.

[19] D.P Hohm, M.E. Ropp, (2006). Comparative Study of Maximum Power Point Tracking Algorithm Using an Experimental, Programmable, Maximum Power Point Tracking Test Bed.

[20] Gupta A, Chauhan YK, Pachauri RK (2016) A comparative investigation of maximum power point tracking methods for solar PV system. Sol Energy 136:236–253

[21] Kashif Ishaque, Zainal Salam, A review of maximum power point tracking techniques of PV system for uniform insolation and partial shading condition, Renewable and Sustainable Energy Reviews, Volume 19, 2013, Pages 475-488,

[22] Xiao W., Dunford W.G. (2004) A modified adaptive hill climbing MPPT method for photovoltaic power systems PESC Record - IEEE Annual Power Electronics Specialists Conference, 3, pp. 1957 - 1963.

[23] Femia N., Petrone G., Spagnuolo G., Vitelli M. (2005) Optimization of perturb and observe maximum power point tracking method. IEEE Transactions on Power Electronics.

[24] Miyatake M., Veerachary M., Toriumi F., Fujii N., Ko H.(2011) Maximum power point tracking of multiple photovoltaic arrays: A PSO approach IEEE Transactions on Aerospace and Electronic Systems, 47 (1), art. no. 5705681, pp. 367 - 380

[25] Kashif Ishaque, Zainal Salam, Hamed Taheri, Amir Shamsudin, (2011) A critical evaluation of EA computational methods for Photovoltaic cell parameter extraction based on two diode model, Solar Energy, Volume 85, Issue 9, Pages 1768-1779, ISSN 00

[26] C. H. Basha and C. Rani, “Different conventional and soft computing MPPT techniques for solar PV systems with high step-up boost converters: a comprehensive analysis,” Energies, vol. 13, pp. 371-397, Jan. 2020

[27] https://bdtechtalks.com/2019/08/05/what-is-artificial-neural-networkann/artificial-neuron/ Accessed 10/20/2021

[28] Q. Duan, M. Mao, P. Duan and B. Hu,(2015) "Application of improved radial basis function neural network method in global MPPT for PV array," IEEE Energy Conversion Congress and Exposition (ECCE), 2015, pp. 3260-3264, doi: 10.1109/ECCE.2015.7310118.

[29] Z. Yong, L. Hong, L. Liqun and G. XiaoFeng, "The MPPT Control Method by Using BP Neural Networks in PV Generating System," 2012 International Conference on Industrial Control and Electronics Engineering, 2012, pp. 1639-1642, doi: 10.1109/ICICEE.2012.433.

[30] K. -H. Chao, M. -H. Wang and Y. -H. Lee, "An extension neural network based incremental MPPT method for a PV system," 2011 International Conference on Machine Learning and Cybernetics, 2011, pp. 654-660, doi: 10.1109/ICMLC.2011.6016761.

[31] Ming-Fa Tsai, Chung-Shi Tseng, Guo-Dong Hong and Shih-Hua Lin, "A novel MPPT control design for PV modules using neural network compensator," 2012 IEEE International Symposium on Industrial Electronics, 2012, pp. 1742-1747, doi: 10.1109/ISIE.2012.6237354.

[32] Chiu YH, Luo YF, Huang JW, Liu YH. An ANN-based maximum power point tracking method for fast changing environments. In: Proc of 13th international symposium on advanced intelligent systems; 2012. p. 715–20.

[33] Gao D, Jin Z, Lu Q (2008) Energy management strategy based on fuzzy logic for a fuel cell hybrid bus. J Power Sources 85(1):311–317

[34] Hiyama T, Kouzuma S, Imakubo T, Ortmeyer TH (1995) Evaluation of neural network based real time maximum power tracking controller for PV system. IEEE Trans Energy Convers 10(3):543–548

[35] Kottas TL, Boutalis YS, Karlis AD (2006) New maximum power point tracker for PV arrays using fuzzy controller in close cooperation with fuzzy cognitive networks. IEEE Trans Energy Convers 21(3):793–803

[36] Masoum MAS, Sarvi M (2002) Design, simulation and construction of a new fuzzy-based maximum power point tracker for photovoltaic applications, Australian universities power engineering conference, AUPEC, pp 1–6

[37] Patcharaprakiti N, Premrudeepreechacharn S, Sriuthaisiriwong Y (2005) Maximum power point tracking using adaptive fuzzy logic control for grid connected photovoltaic system. Renew Energy 30(11):1771

[38] Lalouni S (2009) Study and control of hybrid electric wind power photovoltaic, PHD in Science. University of Bejaia, Algeria

[39] Ishaque K, Salam Z, Amjad M, Mekhilef S (2012) An improved particle swarm optimization (PSO)-based MPPT for PV with reduced steady-state oscillation. IEEE Trans Power Electron 27(8):3627–3638

[40] Ishaque K, Salam Z (2013) A review of maximum power point tracking techniques of PV system for uniform insolation and partial shading condition. Renew Sustain Energy Rev 19:475–488

[41] Rezk, Hegazy & Fathy, Ahmed & Abdelaziz, Almoataz Y., 2017. "A comparison of different global MPPT techniques based on meta-heuristic algorithms for photovoltaic system subjected to partial shading conditions," Renewable and Sustainable Energy Reviews, Elsevier, vol. 74(C), pages 377-386.

[42] G. Rudolph, 1994 “Convergence Analysis of Canonical Genetic Algorithms,” IEEE Trans. On N.N.; Vol. 5; No. 1; Jan. 1994, PP. 96-101.

[43] Adel El Shahat, and Hamed El Shewy, “PM Synchronous Motor Genetic Algorithm Performance Improvement for Green Energy Applications”, Paper ID: X792, Accepted in 2nd International Conference on Computer and Electrical Engineering (ICCEE 2009); Dubai, UAE, December 28 - 30, 2009.

[44] Hadji, S., Gaubert, J.-P., & Krim, F. (2018). Real-Time Genetic Algorithms-Based MPPT: Study and Comparison (Theoretical an Experimental) with Conventional Methods. *Energies*, *11*(2), 459. https://doi.org/10.3390/en11020459

[45] G. Yüksek and A. N. Mete, "A hybrid variable step size MPPT method based on P&O and INC methods," 2017 10th International Conference on Electrical and Electronics Engineering (ELECO), 2017, pp. 949-953.

[46] Goud, J.S., R., K., Singh, B. and Kumar, S. (2018), Maximum power point tracking technique using artificial bee colony and hill climbing algorithms during mismatch insolation conditions on PV array. IET Renewable Power Generation, 12: 1915-1922. https://doi.org/10.1049/iet-rpg.2018.5116

[47] Karatepe E, Hiyama T. (2009) Artificial neural network-polar coordinated fuzzy controller based maximum power point tracking control under partially shaded conditions. IET Renewable Power Generation; 3:239-53

[48] Faiza Belhachat, Cherif Larbes, (2017) Global maximum power point tracking based on ANFIS approach for PV array configurations under partial shading conditions, Renewable and Sustainable Energy Reviews, Volume 77, Pages 875-889

[49] M. G. Villalva, J. R. Gazoli, and E. R. Filho, "Comprehensive approach to modeling and simulating photovoltaic arrays," IEEE Trans. Power Electron., Vol. 24, No. 5, Pp. 1198–1208, May 2009.

[50] Gray, J.L.,(2011) *The Physics of the Solar Cell*, in *Handbook of Photovoltaic Science and Engineering*, A. Luque, Hegedus, S., Editor., John Wiley and Sons.

[51] Ben-Saleh, C. and Ouali, M. (2011) Comparison of Fuzzy Logic and Neural Network in Maximum Power Point Tracker for PV Systems. Electric Power Systems Research, 81, 43-50. http://dx.doi.org/10.1016/j.epsr.2010.07.005\

[52] Yousef Mahmoud et al.,"A Simple Approach to Modelling and Simulation of Photovoltaic Modules," IEEE Trans. on Sustainable Energy, Vol. 3, No. 1 ,pp.185-186, Jan 2012

[53] B.Chitti Babu, Gurjar, S., "A Novel Simplified Two-Diode Model of Photovoltaic (PV) Module," Photovoltaics, IEEE Journal of , Vol.4, No.4, Pp.1156-1161, July 2014

[54] B. Pakkiraiah, G. Durga Sukumar, "Research Survey on Various MPPT Performance Issues to Improve the Solar PV System Efficiency", Journal of Solar

Energy, vol. 2016, ArticleID 8012432, 20 pages, 2016. https://doi.org/10.1155 /2016/8012432.

[55] S. Bhattacharyya, D. S. K. Patnam, S. Samanta et al., "Steady output and fast tracking MPPT (SOFT MPPT) for P&O and InC algorithm", IEEE Transactions on Sustainable Energy.

[56] Yang Y et al 2014 An adaptive and variable step MPPT method based on current predictive controllers P. CSEE 34 855-62.

[57] Ma J H 2015 The research on inverter techniques under non-linear load condition of photovoltaic power generation system Power Electronics 49 94-6.

[58] L. Zhang, S. Yu, T. Fernando et al., "An online maximum power point capturing technique for high-efficiency power generation of solar photovoltaic systems", Journal of Modern Power Systems and Clean Energy, vol. 7, no. 2, pp. 357-368, Mar. 2019.

[59] Seyedmahmoudian, Mohammadmehdi; Mohamadi, Arash; Kumary, Swarna (2014). "A Comparative Study on Procedure and State of the Art of Conventional Maximum Power Point Tracking Techniques for Photovoltaic System". International Journal of Computer and Electrical Engineering. 6 (5): 402–414.

[60] K. Y. Yap, C. R. Sarimuthu and J. M. -Y. Lim, "Artificial Intelligence Based MPPT Techniques for Solar Power System: A review," in Journal of Modern Power Systems and Clean Energy, vol. 8, no. 6, pp. 1043-1059, November 2020, doi: 10.35833/MPCE.2020.000159.

[61] Femia N, Petrone G, Spagnuolo G, Vitelli M (2013) Power electronics and control techniques for maximum energy harvesting in Photovoltaic systems. CRC Press, Boca Raton.

[62] D. S. Morales," Maximum power point tracking algorithms for photovoltaic applications,". Science, Vol..411, no.80. pp.8 2. 2010.

[63] A Mohapatra, B. Nayak, P. Das, & K. B. Mohanty, "A review on MPPT techniques of PV system under partial shading condition,". Renewable and Sustainable Energy Reviews., Vol.80, pp.854-867, Dec.2017.

[64] Faiza Belhachat, Cherif Larbes, A review of global maximum power point tracking techniques of photovoltaic system under partial shading conditions,Renewable and Sustainable Energy Reviews, Volume 92, 2018,Pages 513-553, ISSN 1364-0321, https://doi.org/10.1016/j.rser.2018.04.094.

[65] Pavlyukevich, Ilya (2007). "Lévy flights, non-local search and simulated annealing". Journal of Computational Physics. 226 (2): 1830–1844.

[66] Kennedy, J.; Eberhart, R. (1995). "Particle swarm optimization". Proceedings of ICNN'95 - International Conference on Neural Networks. 4.

[67] Yang, Xin-She; Suash Deb (2009). "Cuckoo Search via Lévy flights". 2009 World Congress on Nature & Biologically Inspired Computing (NaBIC). pp. 210–4.

[68] S. D. Al-Majidi, M. F. Abbod and H. S. Al-Raweshidy, "A novel maximum power point tracking technique based on fuzzy logic for photovoltaic systems", International Journal of Hydrogen Energy, vol. 43, pp. 14158-14171, 2018.

[69] S. A. Rizzo and G. Scelba, "ANN based MPPT method for rapidly variable shading conditions", Applied Energy, vol. 145, pp. 124-132, 2015.

[70] A. Kihal, F. Krim, A. Laib, B. Talbi and H. Afghoul, "An improved MPPT scheme employing adaptive integral derivative sliding mode control for photovoltaic systems under fast irradiation changes", ISA transactions, vol. 87, pp. 297-306, 2019.

[71] Y. Sedghi, Y. Zandi, A. Toghroli, M. Safa, E. T. Mohamad, M. Khorami et al., "Application of ANFIS technique on performance of C and L shaped angle shear connectors", Smart Struct Syst, vol. 22, pp. 335-340, 2018.

[72] K. Amara, A. Fekik, D. Hocine, M. L. Bakir, E.-B. Bourennane, T. A. Malek et al., "Improved performance of a PV solar panel with adaptive neuro fuzzy inference system ANFIS based MPPT", 2018 7th International Conference on Renewable Energy Research and Applications (ICRERA), pp. 1098-1101, 2018.

[73] H. D. Tafti, A. Sangwongwanich, Y. Yang et al., "A general algorithm for flexible active power control of photovoltaic systems", Proceedings of IEEE Applied Power Electronics Conference and Exposition (APEC), pp. 1115-1121, Mar. 2018.

[74] M. R. Javed, A. Waleed, U. S. Virk and S. Z. ul Hassan, "Comparison of the Adaptive Neural-Fuzzy Interface System (ANFIS) based Solar Maximum Power Point Tracking (MPPT) with other Solar MPPT Methods," 2020 IEEE 23rd International Multitopic Conference (INMIC), 2020, pp. 1-5, doi: 10.1109/INMIC50486.2020.9318178.

[75] K. Y. Yap, C. R. Sarimuthu and J. M. -Y. Lim, "Artificial Intelligence Based MPPT Techniques for Solar Power System: A review," in Journal of Modern Power Systems and Clean Energy, vol. 8, no. 6, pp. 1043-1059, November 2020, doi: 10.35833/MPCE.2020.000159.C. Vimalarani, N. Kamaraj, and B. C.

Babu, “Improved method of maximum power point tracking of photovoltaic (PV) array using hybrid intelligent controller,” Optik, vol. 168, pp. 403-415, Sept. 2018.

[76] A. A. Aldair, A. A. Obed, and A. F. Halihal, “Design and implementation of ANFIS-reference model controller based MPPT using FPGA for photovoltaic system,” Renewable and Sustainable Energy Reviews, vol. 82, pp. 2202-2217, Feb. 2018.

[77] C. Vimalarani, N. Kamaraj, and B. C. Babu, “Improved method of maximum power point tracking of photovoltaic (PV) array using hybrid intelligent controller,” Optik, vol. 168, pp. 403-415, Sept. 2018.

[78] Y. Huang, X. Chen, and C. Ye, “A hybrid maximum power point tracking approach for photovoltaic systems under partial shading conditions using a modified genetic algorithm and the firefly algorithm,” International Journal of Photoenergy, pp. 1-13, May 2018.

[79] S. D. Al-Majidi, M. F. Abbod, and H. S. Al-Raweshidy, “A novel maximum power point tracking technique based on fuzzy logic for photovoltaic systems,” International Journal of Hydrogen Energy, vol. 43, pp. 14158-14171, Aug. 2018.

[80] C. Hua, W. Chen and Y. Fang, "A hybrid MPPT with adaptive step-size based on single sensor for photovoltaic systems," 2014 International Conference on Information Science, Electronics and Electrical Engineering, 2014, pp. 441-445, doi: 10.1109/InfoSEEE.2014.6948149.

[81] Dagal, I., Akin, B. & Akboy, E. MPPT mechanism based on novel hybrid particle swarm optimization and salp swarm optimization algorithm for battery charging through simulink. SciRep12,2664(2022) https://doi.org/10.1038/s41598-022-06609-6

[82] R. W. Robinson, W. A. Cronje and K. J. Nixon, "The Design of a Hybrid MPPT Methodology to Mitigate the Effects of Partial Shading in PV Systems," 2022 30th Southern African Universities Power Engineering Conference (SAUPEC), 2022, pp. 1-6, doi: 10.1109/SAUPEC55179.2022.9730627.Ma J H 2015 The research on inverter techniques under non-linear load condition of photovoltaic power generation system Power Electronics 49 94-6.

[83] A. Taylor and S. M. Musa, "Simulation Based Estimation of GMPP Using ANFIS Technique for Photovoltaic System Under Varying Weather Conditions," 2021 International Seminar on Machine Learning, Optimization, and Data Science (ISMODE), 2022, pp. 57-62, doi: 10.1109/ISMODE53584.2022.9743023.

[84] M. Dehghani, M. Taghipour, G. B. Gharehpetian et al., “Optimized fuzzy controller for MPPT of grid-connected PV systems in rapidly changing atmospheric conditions,” Journal of Modern Power Systems and Clean Energy. doi: 10.35833/MPCE.2019.000086

[85] N. Priyadarshi, S. Padmanaban, J. B. Holm-Nielsen et al., “An experimental estimation of hybrid ANFIS-PSO-based MPPT for PV grid integration under fluctuating sun irradiance,” IEEE Systems Journal, vol.14, no. 1, pp. 1218-1229, Nov. 2019

[86] S. Nikolovski, H. R. Baghaee, and D. Mlakić, “ANFIS-based peak power shaving/curtailment in microgrids including PV units and BESSs,” Energies, vol. 11, no. 11, pp. 2953-2975, Oct. 2018.

[87] I. Abadi, C. Imron, R. D. Noriyati et al., “Implementation of maximum power point tracking (MPPT) technique on solar tracking system based on adaptive neuro fuzzy inference system (ANFIS),” E3S Web of Conferences, vol. 43, pp. 1-8, Jun. 2018.

[88] B. Bendib, F. Krim, H. Belmili, M. F. Almi and S. Bolouma, "An intelligent MPPT approach based on neural-network voltage estimator and fuzzy controller applied to a stand-alone PV system", Industrial Electronics (ISlE) proceedings of IEEE 23rd International Symposium on, pp. 404, 1-4 June 2014.

[89] A Mohapatra, B. Nayak, P. Das, & K. B. Mohanty, “A review on MPPT techniques of PV system under partial shading condition,”. Renewable and Sustainable Energy Reviews., Vol.80, pp.854-867, Dec.2017.

[90] Gautam, R., Baskota, P., & Sharma, A. (2014). Solar energy: Trends and enabling technologies. Renewable and Sustainable Energy Reviews, 101, 125-135.

[91] Esram, T. and Chapman, P.L. (2007) Comparison of Photovoltaic Array Maximum Power Point Tracking Techniques. IEEE Transactions on Energy Conversation, 22, 439-449. http://dx.doi.org/10.1109/TEC.2006.874230

[92] Babaa, S. , Murr, G. , Mohamed, F. and Pamuri, S. (2018) Overview of Boost Converters for Photovoltaic Systems. Journal of Power and Energy Engineering,

[93] O. Singh and S. K. Gupta, "A review on recent Mppt techniques for photovoltaic system," 2018 IEEMA Engineer Infinite Conference (eTechNxT), New Delhi, India, 2018, pp. 1-6, doi: 10.1109/ETECHNXT.2018.8385315.

[94] Hameer S and Ejigu N. A prospective review of renewable energy developments in Ethiopia. AAS Open Res 2020, 3:64 (https://doi.org/10.12688/aasopenres.13181.1)

[95] Chow, T. T., Song, C. L., & Fong, K. F. (2010). A review on the development of photovoltaic/thermal hybrid solar technology. Applied Energy, 87(2), 365-379.

[96] Boke MT, Moges SA, Dejen ZA (2022) Optimizing renewable-based energy supply options for power generation in Ethiopia. PLoS ONE 17(1): e0262595. https://doi.org/10.1371/journal.pone.0262595

[97] Adly, M., Ibrahim, M., & El Sherif, H. (2012). Comparative Study of Improved Energy Generation Maximization Techniques for Photovoltaic Systems. 2012 Asia-Pacific Power and Energy Engineering Conference, 1-5.

[98] Ram, J. Prasanth & Babu, T. Sudhakar & Rajasekar, N., 2017. "A comprehensive review on solar PV maximum power point tracking techniques," Renewable and Sustainable Energy Reviews, Elsevier, vol. 67(C), pages 826-847.

[99] Seguel, J.L.; Seleme, S.I., Jr.; Morais, L.M.F. Comparative Study of Buck-Boost, SEPIC, Cuk and Zeta DC-DC Converters Using Different MPPT Methods for Photovoltaic Applications. Energies 2022, 15, 7936. https://doi.org/10.3390/en15217936

[100] A. Taylor and S. M. Musa, "Simulation Based Estimation of GMPP Using ANFIS Technique for Photovoltaic System Under Varying Weather Conditions," 2021 International Seminar on Machine Learning, Optimization, and Data Science (ISMODE), 2022, pp. 57-62, doi: 10.1109/ISMODE53584.2022.9743023.

[101] A. Taylor and S. M. Musa, "Evaluation of Hybrid AI-based Techniques for MPPT Optimization," 2022 International Conference on Green Energy, Computing and Sustainable Technology (GECOST), Miri Sarawak, Malaysia, 2022, pp. 371-375, doi: 10.1109/GECOST55694.2022.10010563.

[102] Priyadarshi, N., Padmanaban, S., Holm-Nielsen, J.B., Blaabjerg, F., & Bhaskar, M.S. (2020). An Experimental Estimation of Hybrid ANFIS–PSO-Based MPPT for PV Grid Integration Under Fluctuating Sun Irradiance. IEEE Systems Journal, 14, 1218-1229.

[103] Chian-Song Chiu, Sy Ngo. (2023) Hybrid SFLA MPPT design for multi-module partial shading photovoltaic energy systems. International Journal of Electronics 110:1, pages 199-220.

[104] S. SIDDULA, "Analysis of Fuzzy Logic Based MPPT Using Incremental Conductance Technique for PV Cell," 2020 International Conference on Smart Technologies in Computing, Electrical and Electronics (ICSTCEE), Bengaluru, India, 2020, pp. 180-185, doi: 10.1109/ICSTCEE49637.2020.9277172.

[105] Sahraoui, H., Mellah, H., Drid, S., & Chrifi-Alaoui, L. (2021). Adaptive maximum power point tracking using neural networks for a photovoltaic systems according grid. Electrical Engineering & Electromechanics, (5), 57–66.

[106] Garud, KS, Jayaraj, S, Lee, M-Y. A review on modeling of solar photovoltaic systems using artificial neural networks, fuzzy logic, genetic algorithm and hybrid models. Int J Energy Res. 2021; 45: 6– 35. https://doi.org/10.1002/er.5608

[107] Bhukya, L.; Kedika, N.R.; Salkuti, S.R. Enhanced Maximum Power Point Techniques for Solar Photovoltaic System under Uniform Insolation and Partial Shading Conditions: A Review. Algorithms 2022, 15, 365. https://doi.org/ 10.3390/a15100365

[108] Erickson, R. W., & Maksimovic, D. (2001). Fundamentals of Power Electronics. Springer Science & Business Media.

[109] Walker, G. R. (2004). Evaluating MPPT Converter Topologies Using a MATLAB PV Model. Journal of Electrical & Electronics Engineering, Australia, 21(1), 49-56.

[110] Atallah, et al. (2014). Implementation of perturb and observe MPPT of PV system withdirect control method using buck and buck boost converters. Emerging Trends in Electrical, Electronics & Instrumentation Engineering: An international Journal (EEIEJ). 1. 31-44.

[111] S. K. Kollimalla and M. S. Kaliamoorthy, "Variable Perturbation Size Adaptive P&O MPPT Algorithm for Sudden Changes in Irradiance," IEEE Transactions on Sustainable Energy, vol. 5, no. 1, pp. 215-223, Jan. 2014.

[112] N. Femia, G. Petrone, G. Spagnuolo, and M. Vitelli, "Optimization of Perturb and Observe Maximum Power Point Tracking Method," IEEE Transactions on Power Electronics, vol. 20, no. 4, pp. 963-973, July 2005.

[113] Algazar, M. M., Abd El-Halim, H., & Salem, M. E. E. K. (2012). Maximum power point tracking using fuzzy logic control. International Journal of Electrical Power & Energy Systems, 39(1), 21-28.

[114] Garip, S.; Ozdemir, S. (2022). Optimization of PV and Battery Energy Storage Size in Grid-Connected Microgrid. Applied Sciences.

[115] Ferrero Bermejo, J., Gómez Fernández, J. F., Olivencia Polo, F., & Crespo Márquez, A. (2019). A Review of the Use of Artificial Neural Network Models for Energy and Reliability Prediction. A Study of the Solar PV, Hydraulic and Wind Energy Sources. Applied Sciences, 9(9), 1844.

[116] Lasheen, Mohamed & Abdel-Rahman, Ali Kamel & Abdel-Salam, Mazen & Ookawara, Shinichi. (2016). Performance Enhancement of Constant Voltage Based MPPT for Photovoltaic Applications Using Genetic Algorithm. Energy Procedia. 100. 217-222. 10.1016/j.egypro.2016.10.168.

[117] Sedra, A. S., & Smith, K. C. (2017). Microelectronic Circuits (7th ed.). Oxford University Press. (Chapter 2 - Amplifiers, and Chapter 8 - Feedback)

[118] Horowitz, P., & Hill, W. (2015). The Art of Electronics (3rd ed.).Cambridge University Press. (Chapter 4 - Feedback and Operational Amplifiers, and Chapter 6 - Oscilloscopes)

CURICULUM VITAE

(+1) 979-645-1176⋄ deyemitaylor@gmail.com
Houston, Texas
www.linkedin.com/in/adeyemitaylor

EDUCATION

Prairie View A&M University Prairie View, Texas
PhD. Electrical and Computer Engineering; GPA: 3.8/4.0 Expected, May 2023
Dissertation: Hybrid AI-based Technique for MPPT in Solar Energy Applications.

Prairie View A&M University Prairie View, Texas
MSc. Electrical and Computer Engineering; GPA: 3.8/4.0 Jan. 2016 - May 2018
Thesis Title: Anomaly Detection in Power System Datasets Using Machine Learning in R-programming.

SKILLS AND COURSES

• Computing and Programming: Python, Verilog, C, MATLAB.
• CAD Tools: Cadence-Allegro, Altium Designer.
• Test and Measurements: Simulink, PSpice, Labcenter Proteus, DC Power Analyzer, Signal Generator, Oscilloscope, Digital Multimeter.
• Applications & Protocols: JAMA Software, I2C, SPI, UART, Linux/Unix.
• Relevant Courses: Advanced Computer Architecture, Advanced Power Systems, Digital Logic Design, VLSI & ULSI Design, Advanced Power Electronics, Engineering Probability – Stochastic Processes.

WORK EXPERIENCE

Prairie View A&M University Prairie View, Texas
Graduate Researcher Sept. 2019 - Present
• Currently Evaluating AI-Based MPPT Techniques for Solar Energy Applications.
• Worked at the Center for Advancing Innovation in Smart Microgrid and participate in the design of smart systems of Microcontroller based hardware-software solutions for various sensing methods.

Halliburton Energy Services. Houston, Texas
R&D Engineering Intern, Production Solutions May. 2022 - August 2022
• Worked on the Inner Vue Diagnostic Tool and developed a mathematical model for the optimization of complex production systems, sensor data analytics, and enterprise software architecture.

Apple Inc. Cupertino, California
Hardware Engineering Intern, Wireless Charging May. 2021 - August 2021

• Utilized existing test setups, collected, and analyzed power logs to help debugging activities.
• Developed a custom python module that automatically retrieves critical power parameters from a third-party software documentation tool to facilitate validation processes.

Apple Inc. Cupertino, California
Hardware Engineering Intern, Wireless Charging May. 2020 - August 2020

• Developed a custom application that would help to reduce the number of iterations it will take to perform a particular test during validation processes.
• Integrated third-party software documentation tool with internal test automation tools thereby allowing test results to be parsed automatically to the test management suite of the application to
eliminate the existing manual approach.
Apple Inc. Cupertino, California
iPhone Hardware Intern May. 2019 - August 2019

• Developed and executed engineering validation and characterization plans for Apple's iPhone Hardware subsystem.

• Integrated Firmware with Hardware design and analyzed the hardware system performance versus expected results - I assisted and performed Engineering Validation and Testing of the 3 Rear Cameras of iPhone 11 before it was released.

Bayer Luling, Louisiana
Electrical & Instrumentation Reliability Engineer June 2017 - August 2018

• Worked as part of the Central Engineering Services team to develop project deliverable including design documents, Process, and Instrumentation Diagrams (PIDs), electrical specifications, loop wiring diagrams, schematics, and installation details. Successfully designed and implemented an automatic flush system along a production line which eliminated the need for some personnel to manually perform the task, thereby improving reliability, accuracy, and up time.

Prairie View AM University Prairie View, Texas
Graduate Research Assistant March 2016 - May 2017

• Conducted data analysis using Python and used data visualization tools to analyze and develop model for weather prediction system.

PUBLICATIONS

• A. Taylor and S. M. Musa "Performance Analysis of Solar Energy System with Different DC-DC Converter Topologies for Hybrid AI-based MPPT" be submitted to IEEE 2023.

• A. Taylor and S. M. Musa," Evaluation of Hybrid AI-Based Techniques for MPPT Optimization" 2022 International Conference on Green Energy, Computing and Sustainable Technology (GECOST) - Green Energy and Power System, Smart Grid, Miri Sarawak, Malaysia, 26-28 October 2022, DOI:10.1109/GECOST55694.2022.10010563

• A. Taylor and S. M. Musa," Simulation-Based Estimation of GMPP Using ANFIS Technique for Photovoltaic System Under Varying Weather Conditions," 2021 International Seminar on Machine Learning, Optimization, and Data Science (ISMODE), 2022, pp. 57-62, doi: 10.1109/ISMODE53584.2022.9743023.

• Taylor, A., Binzaid, S., Attia, J. (2020, July), Microcontroller-based Custom Test Module for Multifunctional Sensor for Radiation Environments Paper presented at 2020 Gulf Southwest Section Conference, online. https://peer.asee.org/35973

• Shuza Binzaid , A. T. (2020). 2. Pico-Watts Powered Multifunctional Active Sensor for Detection of Harmful Electromagnetic Radiation by SHUZA BINZAID AND ADEYEMI TAYLOR. LIFE SCIENCES LEAFLETS, 124, 10 TO 15.

AWARDS AND SCHOLARSHIPS

Third Place, Oral Presentation – 3rd Annual Conference for Student Interdisciplinary Research, PVAMU April 2023.

• Fifth Place, American Society of Engineering Education 2020 Gulf Southwest Conference Research Paper Presentation April 2020

• Apple Inc./TMCF Scholarships (3 times in a roll) 2019, 2020, 2021**($55,000)**

• Prairie View A&M Doctoral Fellowship Spring 2019 - Present

• National Society of Black Engineers Graduate Student Conference Travel Grant Spring 2020