EINDHOVEN UNIVERSITY OF TECHNOLOGY

The hydrogen flame ionization detector

Citation for published version (APA):
Ongkiehong, L. (1960). *The hydrogen flame ionization detector*. [Phd Thesis 1 (Research TU/e / Graduation TU/e), Chemical Engineering and Chemistry]. Technische Hogeschool Eindhoven. https://doi.org/10.6100/IR70383

DOI:
10.6100/IR70383

Document status and date:
Published: 01/01/1960

Document Version:
Publisher's PDF, also known as Version of Record (includes final page, issue and volume numbers)

Please check the document version of this publication:

• A submitted manuscript is the version of the article upon submission and before peer-review. There can be important differences between the submitted version and the official published version of record. People interested in the research are advised to contact the author for the final version of the publication, or visit the DOI to the publisher's website.
• The final author version and the galley proof are versions of the publication after peer review.
• The final published version features the final layout of the paper including the volume, issue and page numbers.

Link to publication

General rights
Copyright and moral rights for the publications made accessible in the public portal are retained by the authors and/or other copyright owners and it is a condition of accessing publications that users recognise and abide by the legal requirements associated with these rights.

• Users may download and print one copy of any publication from the public portal for the purpose of private study or research.
• You may not further distribute the material or use it for any profit-making activity or commercial gain
• You may freely distribute the URL identifying the publication in the public portal.

If the publication is distributed under the terms of Article 25fa of the Dutch Copyright Act, indicated by the "Taverne" license above, please follow below link for the End User Agreement:

www.tue.nl/taverne

Take down policy
If you believe that this document breaches copyright please contact us at:

openaccess@tue.nl

providing details and we will investigate your claim.

Download date: 04. Oct. 2023

THE HYDROGEN FLAME IONIZATION DETECTOR

L. ONGKIEHONG

THE HYDROGEN FLAME IONIZATION DETECTOR

PROEFSCHRIFT

TER VERKRIJGING VAN DE GRAAD VAN DOCTOR IN DE TECHNISCHE WETENSCHAP AAN DE TECHNISCHE HOGESCHOOL TE EINDHOVEN OP GEZAG VAN DE RECTOR MAGNIFICUS Dr. H. B. DORGELO, HOOGLERAAR IN DE AFDELING DER ALGEMENE WETENSCHAPPEN, VOOR EEN COMMISSIE UIT DE SENAAT TE VERDEDIGEN

OP

DINSDAG 19 JANUARI 1960
DES NAMIDDAGS TE 4 UUR

DOOR

LEO ONGKIEHONG
ELEKTROTECHNISCH INGENIEUR
GEBOREN TE MAKASSAR

DRUKKERIJ UITGEVERIJ S. J. P. BAKKER N. V. - AMSTERDAM

Dit proefschrift is goedgekeurd door de promotor
Prof. Dr. Ir. A. I. M. Keulemans.

This investigation was carried out in the Koninklijke/Shell-Laboratorium, Amsterdam. The author is very grateful that he was permitted to use the results of the work as the basis of this thesis.

Thanks are also due to Dr. H. Boer, Dr. E. W. Duck and Dr. G. W. A. Rijnders, and to Messrs. F. van de Craats, A. Kwantes and H. Meelker for their advice and the valuable data which they put at the author's disposal and to Mr. E. Fuchs for his assistance in the experimental work.

TABLE OF CONTENTS

1. INTRODUCTION 7
1.1. Gas chromatography 7
1.2. The detector in gas chromatography 10
1.3. Principle of the hydrogen flame ionization detector . . 11
1.4. Some conventional detectors 11
1.4.1. The katharometer 11
1.4.2. The radiological detectors 12
1.5. Volume of the detector 13
1.6. Sensitivity and minimum detectable concentration . . . 14

2. THE HYDROGEN FLAME IONIZATION DETECTOR 16
2.1. Equipment 16
2.1.1. The detector cell construction 16
2.1.2. The electric circuit 16
2.1.2.1. Basic circuit 16
2.1.2.2. Impedance converter 17
2.1.2.3. Earthing 17
2.1.2.4. Guarding 17
2.1.2.5. Complete diagram 17
2.2. Mechanism of the detector 19
2.2.1. General behaviour of the detector 19
2.2.2. Literature on the hydrocarbon flame 19
2.2.3. Transport of electricity through a partially ionized gas 20
2.2.4. Ionization efficiency and ion concentration . . . 23
2.2.5. Recombination 23
2.2.6. Electrode polarity 25
2.2.7. Revised definition of sensitivity 25
2.3. Detection limits 25
2.3.1. Restriction set by the hydrogen flame 25
2.3.2. Ions from contaminants 26
2.3.2.1. Combustion air 26
2.3.2.2. Apparatus tubing 26
2.3.2.3. Column packing 27
2.3.3. Ions inherent to the hydrogen flame 27
2.3.4. Ultimate detection limit 28
2.3.5. Theoretical consideration of the ion production . 29
2.4. Flow stabilization 31
2.5. Theoretical consideration of the signal/noise ratio . . 31
2.6. The influence of different parameters 33

3. PRACTICAL APPLICATION OF THE HYDROGEN FLAME IONIZATION DETECTOR 35
3.1. Review of the properties of the detector 35
3.2. Interpretation of the chromatogram 36
3.3. Sensitivity for various vapours 36
3.4. A chromatographic apparatus for detecting very low vapour concentrations 38
3.5. Application to capillary columns 39

Appendix 42
Summary 43
Samenvatting (Summary in Dutch) 45
Literature references 47

1. INTRODUCTION

1.1 *Gas chromatography*

The term "gas chromatography" is the collective name given to various methods intended for separating mixtures of substances in their gaseous state. These methods are mainly employed for analysis, also to a less extent in small-scale preparative work and other applications. The interest in these procedures has reached a high level during recent years, especially since the introduction of gas-liquid chromatography by James and Martin[1] in 1952. The latter method in particular has undergone an unprecedented development in the few years since its publication.

The extremely rapid development of gas-liquid chromatography is to a great extent due to the work done on this subject in petroleum research laboratories. This statement is clearly proved by the origin of most publications that have appeared in the field, as well as by the fact that the petroleum industry has played a large part in organizing symposia for discussing the methods in question.

The interest of the oil chemist in gas chromatography results from several factors.

In the first place, a large proportion of the products passing daily through his hands are volatile and are therefore ideally suited to analysis in the vapour state.

In the second place, gas chromatography provides an extremely rapid and easy means for separating small amounts of complex mixtures that previously could be resolved only with the greatest difficulty by lengthy operation on far larger scale.

It is precisely this type of mixture which the petroleum laboratory has to deal with most frequently. Consequently gas chromatography within a few years has become one of the most versatile weapons in the oil research worker's arsenal.

Mixtures to be analyzed by gas chromatography should consist of (or at least contain) substances volatile at the operating temperature. Preferably the components to be separated should not cover too great a range of volatility, though "wide-range" samples may be analyzed by special modifications of the process.

For analytical separations the sample used is small, as a rule in the range of 1-20 mg. By means of some suitable device this sample is introduced into one end of the chromatographic column, containing a stationary, non-volatile substance acting as retardant; this substances may be either an adsorbent or an absorbent.

In gas elution chromatography the mixture to be examined is introduced as a narrow band into the chromatographic column and is then washed down with an inert gas. As the elution proceeds there is a separation of the original narrow band into bands of its component substances.

Assuming a constant carrier-gas velocity, the time required for a component molecule to emerge from the column depends upon the time

it has spent in the stationary phase. Separation is effected by the fact that molecules of different types spend different times in this phase.

The first problem of chromatography is to find means of influencing selectively the residence time of the molecules of one component with respect to molecules of other components of the mixture (selective retardation), thus furthering the separation of component bands. The complication arises, however, that during transport the originally narrow bands broaden out, and this tends to cause an overlap of neighbouring bands.

The distance over which a band moves is proportional to the time; and so is the distance between the centres of two bands. The dispersion of the band will be proportional to the square root of the time. From this phenomenon there follows immediately the second problem, that of minimizing band dispersion.

With reference to the first problem, the selective retardation of component substances is effected by using appropriate stationary phases. In gas-liquid chromatography the theoretical aspects of this problem coincide with the problems involved in the study of dilute liquid solutions. Although valuable guidance may be obtained from theoretical considerations, the selection of column liquids at present is based largely on practical rules.

As regards the second problem, in gas-liquid chromatography (and also in some of the other forms of chromatography) band dispersion arises from the following causes:

a) At the high velocities of the moving phases prevailing in gas chromatography, equilibrium cannot be attained. Absence of equilibrium has the result that in certain places in the column solute molecules remain in the gas phase too long; these molecules have too high an effective rate of movement. Other molecules are slow in evaporating from the liquid phase and will move more slowly than the average solute molecule.

b) Diffusion causes a movement of the solute molecules which is superimposed upon the forced movement caused by the pressure gradient. In gas-liquid chromatography this type of band dispersion appears to be caused mainly by diffusion in the gas phase. Diffusion in the liquid phase is usually negligible (except in very lean columns where the film of liquid is so thin that the diffusion time is very short in spite of a low diffusion constant in the liquid).

c) In a packed bed uniformity of flow can never be realized. There are numerous paths between the particles from the column inlet to the column outlet and the lengths of these paths vary around an average length. Molecules will emerge ahead of or behind the centre of a solute band according as they proceed along a "short" or "long" route through the column.

In the practice of chromatography we see that from a mixture of solutes introduced simultaneously as a narrow band each solute band is transported with its own effective rate of movement. This transport is accompanied by dispersion of the solvent bands caused by the three phenomena mentioned above.

In gas-liquid chromatography the solute bands are usually symmetrical and the centre of the band moves at a rate which is in constant proportion to the rate of flow of the carrier gas.

The dispersion occurs in an almost symmetrical manner according to the laws of statistics. If there were no band dispersion the most critical separation could easily be performed even in a short column. The design of efficient columns mainly amounts to minimizing band dispersion arising from the causes mentioned.

Apart from these causes a certain band width arises from the width of the mixture band as introduced. In ideal cases the sample of the mixture to be analyzed should be so small that it does not occupy a part of the column corresponding to more than one theoretical plate.

The number of theoretical plates n of a chromatographic column can easily be derived from the chromatogram[2]. The height equivalent to a theoretical plate (H.E.T.P.) is found by dividing the length of the column L by the number of plates: H.E.T.P. $= \frac{L}{n}$. Van Deemter[3] has derived a relation between H.E.T.P. and the linear gas velocity u:

$$\text{H.E.T.P.} = A + \frac{B}{u} + C \times u \, .$$

The problem of minimizing band dispersion amounts to finding means of minimizing the coefficients A, B and C.
Coefficient A corresponds to the non-uniformity of flow caused by the packing. Coefficient B corresponds to the effect of gas diffusion and coefficient C is related to the non-equilibrium effect (mass transfer coefficient). Thus it is advantageous to operate the column at high gas velocity because this reduces the time of analysis and at the same time the value of $\frac{B}{u}$ becomes almost negligible. Large values of u, however, cause C x u to be large, unless C can be kept very small.

Many attempts have been made to construct columns and adopt operating conditions for which the free terms of the equation for H.E.T.P. are small. In this connection the work of Scott[4] should be mentioned. He succeeded in constructing packed columns with up to 30,000 theoretical plates.

The best column performance however was obtained by Golay[5] who used capillaries internally coated with a very thin film of the retentive liquid and several hundred feet in length. As these capillaries do not contain a packing, the coefficient A is small, and because of the small thickness of the liquid layer the coefficient C is extremely small and hence the value of C x u is small. Desty[6] among others discussed the practical use of such capillary columns, which have 200,000 theoretical plates and more.

The use of capillary columns implies the introduction of extremely small samples since the effective volume of one theoretical plate is so small. This fact and the band broadening necessitate detectors at the end of the column which have a much better ability to detect very low concentrations than the detectors commonly used. It is a fortunate circumstance that these highly sensitive detectors were developed at about the same time although independently of the capillary columns.

It is not expected that the Golay columns will replace the packed columns, but rather will complement them. It is expected that capillary columns are going to play a role in the research on flavours and air pollution. One prospective application might be particularly mentioned, viz. determination of fatty acids in blood. It is hoped that the fatty acids spectrum will play an important role in the diagnosis of many diseases. At present the method has the attention of those engaged in research on arteriosclerosis.

1.2. *The detector in gas chromatography.*

The detector must be able to detect and record the small vapour concentrations in the carrier gas. The higher the sensitivity, the smaller the sample size which can be analyzed. This again results in a better performance of the column. An analogous case can be found in the photocell of a spectrometer. The higher its sensitivity the narrower the slit that can be used which in its turn results in a higher resolving power of the instrument.

The detector must respond rapidly to concentration changes in the carrier gas and its volume must be very small. Further requirements are that it should be linear, simple in construction and inexpensive to make.

Numerous detectors have been developed in the recent years, each based upon the reaction to differences between the magnitude of one certain physical property of the vapours to be detected and that of the carrier gas. The greater these differences are, the easier it is to increase the ability of the detector to detect low concentrations. The ideal case would be for the carrier gas to lack a certain physical property which is very pronounced in all the components of the sample. However this is never the case and this fact creates a physical restriction upon the ultimate limit of detection.

Methods of detection have been based among other things upon heat conductivity, calorific value, spectrometric emission, density, infra-red absorption and ionization. In the case of the last method it has already been felt for some time that an almost ideal detector could be realized if it were possible to subject the gas to a selective ionization process. Owing to the differences in the values of the ionization potential, it should then be possible to create an electric gas conductivity caused by the ionization of the sample molecules only. The carrier gas would have to be selected for its high ionization potential, so that it would produce no "background signal". This idea was adumbrated in a lecture given by Martin[7]: "In what form, I cannot tell, but I am sure that a method involving ionization will be one of the principal methods which will be evolved".

The invention of the hydrogen flame ionization detector by McWilliam and Dewar[8] fulfils this prediction to a great extent. The ionization process in a hydrogen flame appears to be so selective for organic material that indeed it constitutes a very sensitive detector for gas chromatography.

However, the high performance described by McWilliam and Dewar was not obtained by other workers. Thompson[9] found a sensitivity 10^3 times lower, his limitations apparently being set by the electronic circuit.

In view of this discrepancy, the investigation described in this thesis

was made, with the aim of studying the physical aspects and determining the detection limits of this potentially valuable device.

1.3. *Principle of the hydrogen flame ionization detector.*

The hydrogen flame ionization detector of McWilliam and Dewar is based on the measurement of the electrical conductivity between two electrodes which are inserted into the plasma of a hydrogen flame. Whereas for the hydrogen flame this conductivity is very low (10^{-12}-$10^{-13}\Omega^{-1}$), the addition of small amounts of organic material to the flame causes a great increase in conductivity. Hence the detector has a very low "background signal".

Hydrogen is either supplied through the column as carrier gas, or it is added after the column, in which case nitrogen or other gases can be used as carrier gas.

The way the electrodes are inserted into the flame plasma has appeared to be not very critical .The usual method employs the metal burner as one electrode and a platinum or brass gauze about 10 mm above the burner as the second electrode.

As a result of the very high impedance levels of the conductance measurements, standard self-balancing potentiometer recorders can not be connected directly to the circuit. A suitable impedance converter has to be inserted.

Experiments have established that between the amount of specific organic material added and the increase in conductance of the flame there exists a linear relationship. The recorded signals are thus for direct interpretation.

1.4. *Some conventional detectors.*

In order to obtain a good impression of the flame ionization detector it may be useful to discuss some other detectors. The katharometer is by far the most widely used conventional detector and has already been explored in detail. In the second place may be mentioned the radiological detectors which are adaptable for high-temperature work and which are able to detect very low vapour concentrations when used with argon as carrier gas.

1.4.1. *The katharometer.*

The katharometer or heat conductivity cell in its usual form consists of a wire mounted axially in a cylindrical space through which the gas stream is passed. The wire is heated by a constant electrical current. At thermal equilibrium the heat generated by the current is equal to the heat transferred from the wire. The wire temperature at which this equilibrium is attained depends therefore upon the thermal conductivity of the gas and is determined by measuring the electrical resistance of the wire itself.

In general the cells are used in pairs. One is the measuring cell through which is passed the blank carrier gas only. By subtracting the signals from the two cells, the background signal is eliminated and the resulting differential signal is proportional to the vapour concentration in the measuring cell.

With the katharometer this is obtained by connecting the wires of the cells in a symmetrical Wheatstone bridge. The bridge current also functions as the heating current. The out-of-balance voltage of the bridge is a direct measure for the vapour concentration. A self-balancing potentiometer recorder can be operated directly from the bridge circuit.

The katharometer is a very versatile detector sensitive to all kinds of vapours having a specific heat conductivity different from that of the carrier gas. The working temperature is limited to 200-250° C and is determined by the wires in the cell. The electrical circuit is very simple but the detector cell is sensitive to mechanical vibration.

1.4.2. *The radiological detectors.*

The beta-ray detector was the first ionization detector used in gas chromatography [10, 11]. It has a small radioactive source emitting beta-rays which is used to ionize the vapours in the detector cell. This results in an electrical conductivity of the gas which is measured by inserting a pair of electrodes in the cell and connecting it in series with a d.c. source and a high value resistor (value of the order of 10^9-$10^{10}\Omega$). The ionization current causes a voltage drop across the resistor which is measured by a suitable electrometer.

The cross section of an organic molecule is much bigger than that of the carrier gas (N_2 or H_2) and hence the ionization current is mainly determined by the concentration of the organic materials.

When using a reference cell, the cells are attached to each other and have a central common electrode. The separate d.c. sources are connected in such a way that for the carrier gas the ionization currents are balanced out.

The detector is suitable for temperatures up to 250° C or even higher. The sensitivity depends upon the cross section of the sample molecules. The cell is unsensitive to mechanical vibration but the detector needs more elaborate instrumentation than the katharometer.

The beta-ray detector has been improved by Lovelock[12]. A higher ionization eficiency has been obtained for the vapours by using argon as carrier gas. On entering the detector cell argon is excited into a metastable state. The organic molecules are ionized by collision with the excited argon atoms. The electrons emitted in this manner are able to enter into the process of making more metastable atoms. This effect depends upon the cell voltage so that a still higher signal can be obtained by increasing this voltage. Cell voltages of 500-2000 V are commonly used.

The argon detector has the same advantages as the previously discussed beta-ray detector but its sensitivity is much higher. It needs, however, even more instrumentation. The detector can be constructed with a very small volume and is then very suitable in combination with high efficiency columns.

The minimum concentration levels detectable with the above mentioned detectors are dependent upon many factors such as the carrier gas used, the nature of the vapour and the working conditions. Hence it is difficult to make an exact comparison between the detectors. For orientation purposes however the figures from table I can be used which are based on the sensitivity to benzene.

TABLE 1.

Detector	Minimum detectable concentration in the carrier gas ml/ml
Katharometer	$10 : 10^6$
Beta-ray detector	$50 : 10^6$
Beta-ray detector with argon	$0.2 : 10^6$*)

With the hydrogen flame ionization detector it is possible to detect concentrations down to $0.001 : 10^6$ ml/ml or 3×10^{-12} g/ml.

1.5. *Volume of the detector cell.*

The ability of the detector to respond to rapid concentration changes of the column effluent depends on factors such as the physical process involved in the detection method, the band width of the recording instruments and the volume of the detector cell. The first and the second point are normally not the limiting factors. A thermal process such as is used by the katharometer does not need more than about a tenth of a second to come to thermal equilibrium whilst an ionization process is still much faster. The band width of the more highly developed recording instruments is usually quite adequate; recorders having a response time of 1/10 second can nowadays be considered as standard instruments.

For those detectors which react to the vapour concentration in the carrier gas the cell volume is a very important factor. The concentration must first be built up in the cell before the detector gives its full signal output. This effect results in an integration of the true concentration course over a time equal to the ratio $\frac{\text{cell volume}}{\text{carrier gas flow rate.}}$ Here it is assumed that the column effluent enters the cell by frontal displacement of the gas in the cell and gaseous diffusion is neglected. Thus although the vapours have been separated by the column, the peaks on the chromatogram may still overlap. It is therefore advantageous to have the cell volume always smaller than the volume of the carrier gas containing the vapour of one component.

The minimum cell volume attainable depends on the possibility of constructing a cell of the smallest dimensions without interfering with performance. For the katharometer and the beta-ray detector the smallest volume is of the order of 0.5 ml. This is more than adequate for most gas-chromatographic apparatus. With high-efficiency capillary columns, however, 0.5 ml is still too large.

For detectors which react to the amount of component material entering the cell per unit time instead of concentration, the cell volume is less important. It only causes a signal delay but not an integrating effect. The detector response is then only determined by the physical process involved and the recording instruments.

---

*) This figure has been obtained with a commercial apparatus manufactured by W. G. Pye and Co. Ltd. The detector is still under development, however, and further improvement in performance is to be expected.

1.6. *Sensitivity and minimum detectable concentration.*

In the field of gas chromatography the expression "sensitivity" is sometimes used to indicate the ability of a detector to detect low vapour concentrations, but it can also mean the signal output of the detector for a given vapour concentration. Unfortunately these meanings are often confused. The sensitivity parameter S as defined by Dimbat, Porter and Stross[13], which is expressed in mV/mg/ ml, belongs to the latter category.

To characterize unambiguously the merits of a detector, however, it is necessary to give information on both points. For this it should be sufficient to state the S factor mentioned above together with the noise on the zero line. The minimum detectable concentration level Δ can then be found from: $\Delta = \frac{\text{noise on the zero line}}{S}$

In this case it is assumed that signals lower than the noise are not detectable. This is certainly not true, but the techniques to achieve this are quite complicated and not practical for use in gas-chromatography.

It is advantageous to derive the definitions from those which have already been established for radiation detectors in optics, and which have been treated by Clark Jones[14]. A detector is then characterized by two properties, viz:

1) The responsivity, which is the signal output of the detector for a given vapour concentration and
2) The detectivity, which is the reciprocal of the minimum detectable concentration.

The reseponsivity is thus equivalent to the S parameter and the detectivity to $\frac{1}{\Delta}$. The term sensitivity in the following discussion will be used for responsivity only.

The hydrogen flame ionization detector does not respond particularly to the vapour concentration, but produces a signal proportional to the amount of organic material entering the cell per unit time. It is therefore desirable to express the sensitivity in the dimensions mV/mg/sec. The output voltage however depends also upon the electrical circuit used, and it will be seen and explained later that it is more accurate to measure the cell current. Thus the author proposes to express the sensitivity of the flame ionization detector S_f in μAmp/mg/sec.

Since the amount of organic material entering the cell per unit time can be found by multiplying the carrier-gas flow rate F_{c_g} by the vapour concentration, the minimum detectable concentration for the flame ionization detector is given by:

$$\Delta = \frac{\text{noise on the zero line}}{S_f \times F_{c_g}} \qquad \ldots\ldots\ldots\ldots\ldots\ldots\ldots\ldots (1)$$

Fig. 1
Side view of the detector cell

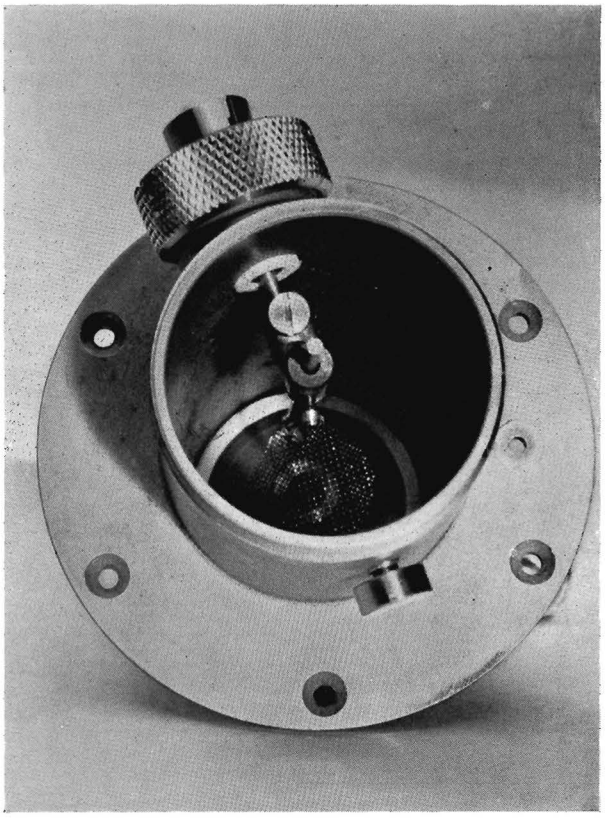

Fig. 2
Top view of the detector cell

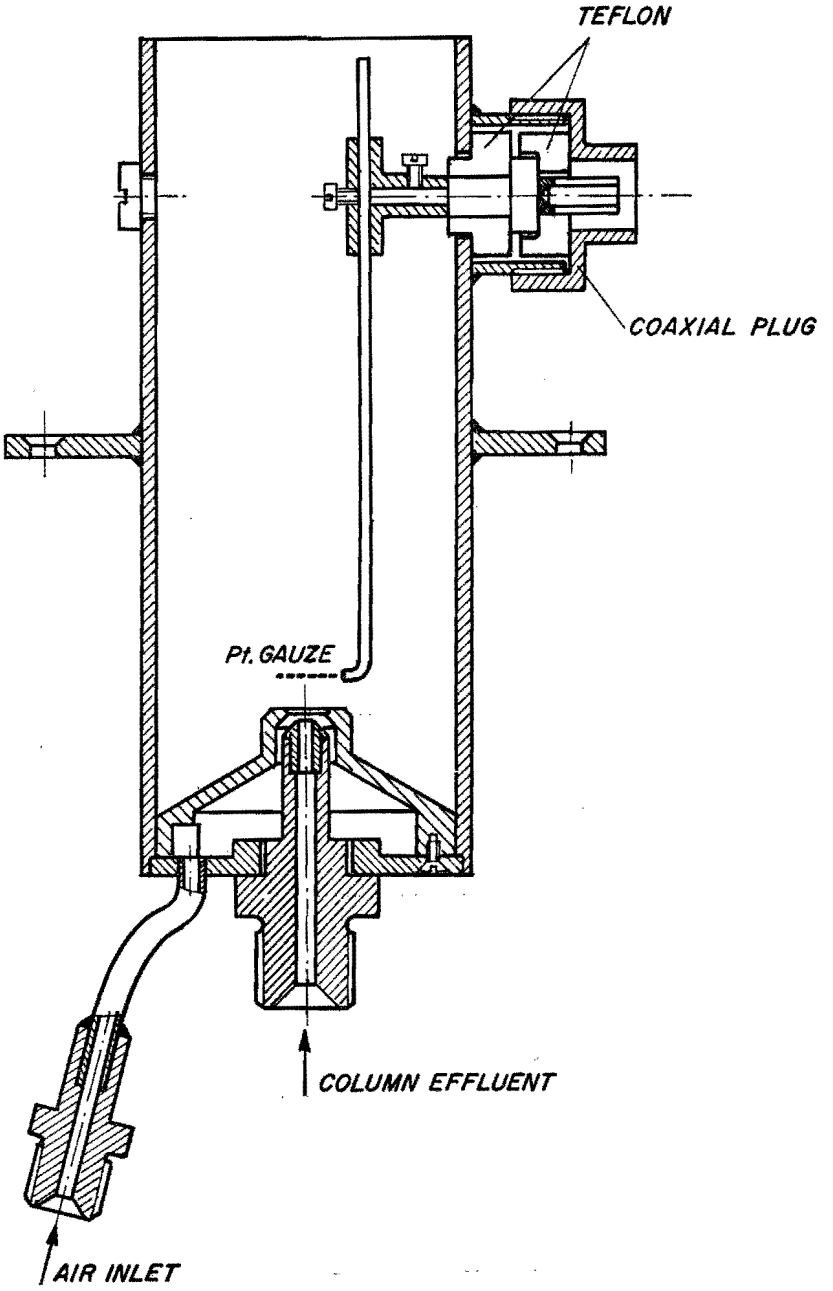

Fig. 3
Construction of the detector cell

2. THE HYDROGEN FLAME IONIZATION DETECTOR.

2.1. *Equipment.*

2.1.1. *The detector cell construction.*

The detector cell as used in the experiments is shown in fig. 1, 2 and 3. It consists of a stainless steel cylinder having an internal diameter of 40 mm, through the bottom plate of which the burner is mounted. The column effluent enters the cell through the burner.

Auxiliary air is also supplied through the bottom plate and is directed around the burner port by means of a cap which ensures good mixing with the column effluent.

A platinum gauze electrode which is adjustable in height is mounted above the burner. The electrode connection is made via a coaxial plug construction in which teflon is used as the insulation. The other electrode is formed by the burner and the metal cylinder and is always earthed. This has the advantage that the inner electrode is screened against a.c. pick up which can be very troublesome in the high-impedance circuits.

2.1.2. *The electric circuit.*

2.1.2.1. *Basic circuit.*

The measuring circuit in its simplest form is shown in fig. 4. The detector cell is connected in series with a d. c. source B_1 and a series resistors R_s. The value of R_s must be chosen such that it is small in comparison to the impedance of the cell. Thus the circuit current I_1 is almost

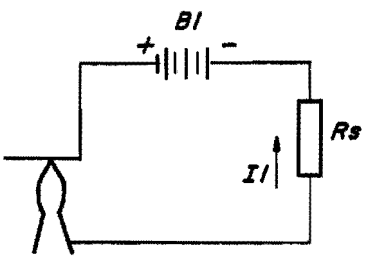

Fig. 4
Simplified diagram with one cell

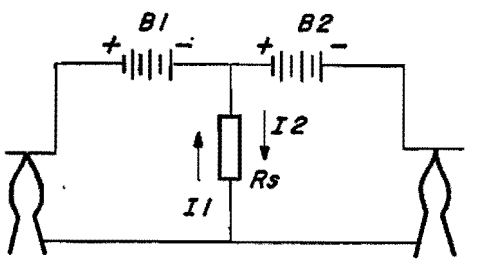

Fig. 5
Simplified diagram with reference cell

entirely determined by the behaviour of the cell. The voltage across R_s is a linear measure for the circuit current.

If a reference cell is incorporated the circuit shown in fig. 5 is used. The d.c. sources B_1 and B_2 are connected in such a way that the circuit currents I_1 and I_2 are in opposite direction through R_s.

2.1.2.2. *Impedance converter.*

The impedance represented by the cell is in the order of 10^9-$10^{12}\Omega$ which requires a series resistance of 10^7-$10^{10}\Omega$. This implies that an electrometer impedance converter must be used to measure the voltage across R_s. The voltage range must be in the order of 100-1000 mV full scale. This is just the range where the conventional direct-coupled amplifiers will fail with respect to stability. Working with 100 mV full scale requires a stability of better than 50 μV, so that for this purpose the vibrating reed or chopper amplifiers are more suitable. In the experiments described below the "Vibron electrometer"*) was used, whose output was fed into a standard 2.5 mV recorder.

2.1.2.3. *Earthing.*

It is desirable to operate the electrometer with the "low" terminal earthed. On the other hand one electrode of the detector cell is already earthed and for this reason the common point of the detector cell and the series resistor should be earthed. This implies however that the d.c. source must "float" on high impedance level, a condition which is very difficult to realize when using a mains-supplied d.c. source since it needs a special type of highly insulated transformer winding. A better method is to use a standard "hearing aid" battery mounted in a perspex or teflon box. The circuit current is very low so that the lifetime of the battery will be determined by its own leakage.

2.1.2.4. *Guarding.*

It sometimes happens, especially during highly sensitive work, that the records suddenly become noisy. This is often caused by a leakage between the battery and earth which results in a signal across R_s. The battery insulation resistance with respect to earth must be many times higher than the impedance represented by the cell. This is not always realized even with teflon insulation. A probable cause is the battery electrolyte which produces a leakage over the insulator surface.

An effective means of reducing the leakage current is to apply a suitable guarding around the battery. For this purpose the battery is wrapped into a metal foil which is connected to the pole of the battery on the resistor side. No e.m.f. can now act in the leakage circuit and the insulation resistance may be several orders lower.

2.1.2.5. *Complete diagram.*

The complete diagram is shown in fig. 6. The circuit is housed in a metal cabinet which provides a good screening. Connections to the detec-

---

*) Vibron Electrometer type 33c Electronic Instrument Ltd.

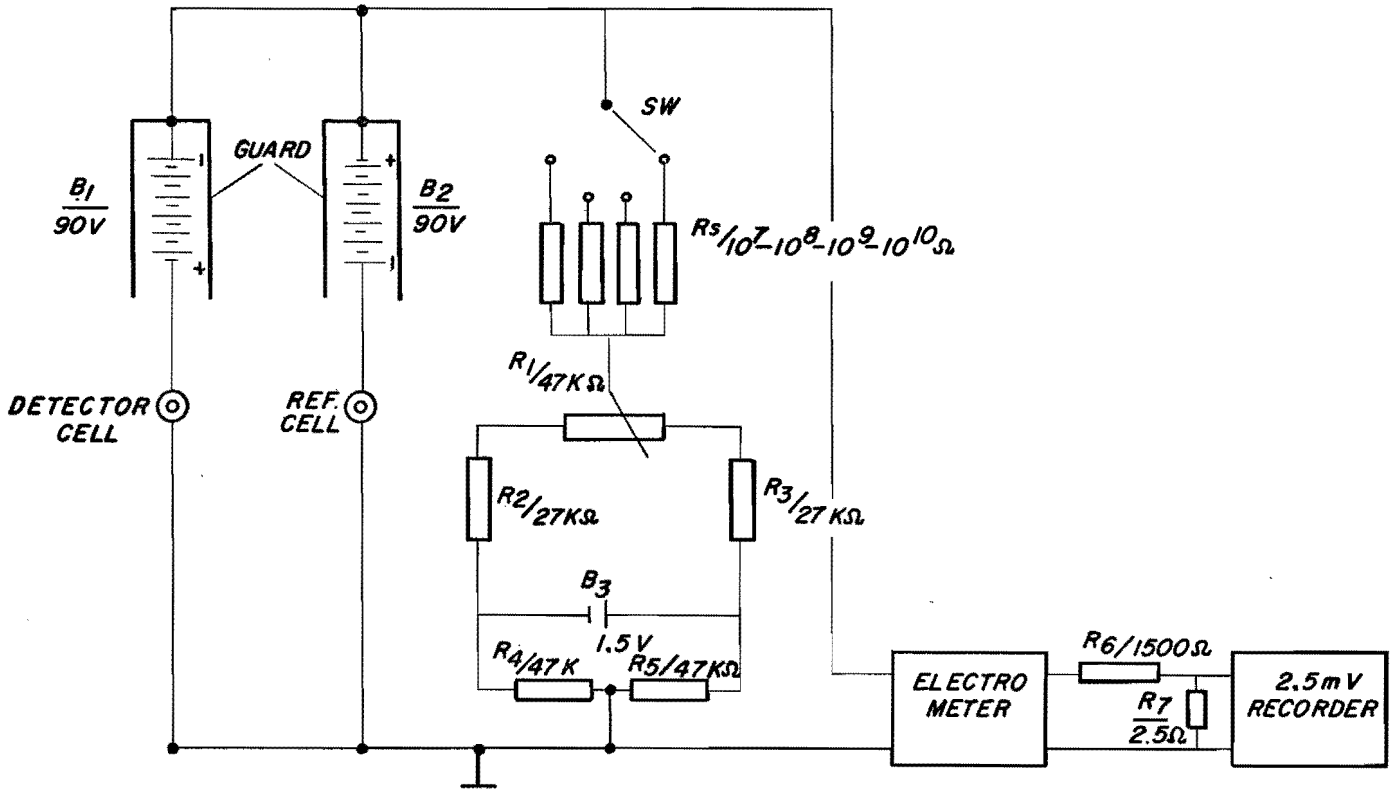

Fig. 6
Circuit diagram for the flame ionization detector

tor cells and the electrometer are made via non-microphonic cable*) to prevent any electrostatic effects caused by mechanical deformation of the cable.

The series resistor can be chosen by switch Sw (10^7-10^8-10^9 and $10^{10}\Omega$).

The output of the "Vibron" is matched to the recorder by R_6-R_7.

2.2. *Mechanism of the detector.*

2.2.1. *General behaviour of the detector.*

In order to obtain a preliminary view the most striking properties of the detector are listed below. The points are not arranged in order of importance but in a manner convenient for discussion in the following sections.

1) The construction of the cell is not critical. Neither the form nor the physical dimensions alter the signal output appreciably. In addition to the construction shown in fig. 1 several modifications were tested but practically no differences in output voltage were observed.

2) The distance between the electrodes, and their physical surface area have practically no influence upon the detector perfomance as long as the vapour concentrations are low.

3) Below a certain voltage across the cell its behaviour is more or less ohmic. With higher voltages there seems to occur a kind of saturation current so that increasing the voltage the current remains practically constant. The voltage at which this effect begins to make itself felt depends only slightly upon the distance between the electrodes and the vapour concentration in the cell.

4) The conductance of the cell is proportional to the amount of organic material entering the cell per unit time as long as the vapour concentration is low.

5) The blank hydrogen/air flame itself already causes a conductivity of the cell which increases with the hydrogen flow rate.

Points 1—4 are favourable features which make the detector very suitable for routine analyses. No special construction is needed and thus the detector cell is inexpensive to make.

Point 5 however has an important consequence. It means that a small background signal is present. This of course can be offset electrically by means of a reference cell, but fluctuations on the hydrogen flow rate result in noise on the output signal of the detector. This determines the ultimate limit of detection which can be achieved. Accordingly the flow stabilization technique determines the minimum detectable concentration level.

2.2.2. *Literature on the hydrocarbon flame.*

It is reasonable to assume that the ionization mechanism for small amounts of organic material in a hydrogen flame is similar to the process in a hydrocarbon flame. The latter has already been studied intensively,

---

*) Telcon Cable type PT1GM.

and hence it can be advantageous to study the literature on the hydrocarbon flame and to select those points which are applicable to our problem.

It has been observed by many workers that the ion concentration in a hydrocarbon flame is many times higher than can be accounted for by thermal ionization alone. The theoretical ion concentration can be calculated from Saha's[15] relation for ions in thermodynamic equilibrium with their parent species.

Calcote[16] estimated a positive ion concentration of 10^{12} ions/ml at the inner cone of a n-butane flame by measuring the deflection of the flame in a transverse electric field. Shuler and Weber [17] reported electron concentrations between 6 x 10^9 and 10^{10} electrons/ml as an average over a part of the inner and outer cones of an acetylene/oxygen flame. This value was obtained by measuring the attenuation by the flame of electromagnetic radiation.

The figures given by Calcote and Shuler and Weber are much higher than can be expected from Saha's relation taking into account the high ionization potential (9-11 V) of the various species in the flame. A possible explanation of the high ion concentration has been given by Stern[18] who suggested that the low work function of graphite (4.35 V) would make it possible for ions and free electrons to originate in the thermal emission of carbon aggregates.

Studies on the structure of carbon particles in the flame have shown the presence of aggregates with a diameter between 10^{-6} and 10^{-5} cm. Subsequently Arshinov and Musin[19] derived a formula for the calculation of electrons originating from thermal emission from carbon. This takes into account recombination of electrons with positively charged particles. According to their formula the observed ion concentration is caused by particles of radius of the order of 10^{-6} cm.

The ions are formed in a very thin region at the inner cone of the flame. This was concluded from ion concentration measurements as carried out by Kinbara and Nakamura[20].

Above the reaction zone the ions tend to recombine with the electrons. The rate of this recombination is directly proportional to the product of the ion concentration $[N^+]$ and the electron concentration $[N^-]$ i.e.

$$-\frac{dN}{dt} = a\,[N^+].\,[N^-]$$ in which a is the recombination coefficient.

From this it can be seen that the greater these concentrations the greater the effect of recombination phenomenon on the electric conductivity.

Whatever the explanation for the high ion concentration may be, it is advantageous from the standpoint of the detector performance since it creates a large contrast with respect to the "uncontaminated" hydrogen flame.

2.2.3. *Transport of electricity through a partially ionized gas.*

With the above basic points in mind we may consider the transport of electricity through the flame as present in a detector cell. Two electrodes are inserted in the plasma of the flame (or one eletrode is inserted and the other is formed by the burner) and connected externally to a d.c. source.

— ..... there is the hydrogen burning. There is our philosophical candle. It is a foolish feeble sort of a flame, you may say; but it is so hot that scarcely any common flame gives out so much heat. It goes on burning regularly, and I am now about to put that flame to burn under a certain arrangement, in order that we may examine its results and make use of the information which we may thereby acquire. —

"History of a candle" by
Michael Faraday

The plasma contains positive ions and electrons. The electrons are attracted by the anode and can enter into its metal. The ions, being positive, move towards the cathode.

The collection of an electron by the anode must correspond to the emission of an electron from the cathode because of the continuity of the current in the outer circuit.

The cathode however is not able to emit electrons spontaneously for its temperature is so low ($\ll 1200°$ C), that thermal emmission is negligible (for Pt $< 10^{-16}$ amp/cm^2). Thus the only way for the electrons to overcome the work function of the metal is by recombination with positive ions at the metal surface.

For every electron collected by the anode therefore an ion should travel towards the cathode, and consequently the transport of electricity through the gas plasma is determined by the properties of both the electrons and the ions.

As already mentioned in section 2.2.1. the current through the detector cell increases with the voltage although above a certain value of the cell voltage the current remains practically constant. Examples of such a current/voltage relation are curves I and II in fig. 7. We shall examine two possible explanations of the saturation effect, the second of which will be shown later by experiment to be the more likely.

1) For low cell voltages the ions and electrons from the gas plasma in the immediate vicinity of the electrodes are responsible for the transport of electricity. The ions and electrons are supplied from the reaction zone of the flame by the gas stream and by gaseous diffusion.

By increasing the value of the cell voltage and thus bij increasing the electric field strength between the electrodes, more ions and electrons are attracted towards the region of the electrodes and this builds up a space charge around the latter. This causes the cell voltage to be concentrated mainly over that part of the field which contains the least ions. Any increase in the cell voltage now results mainly in an increase of space charge density. The current is then what is called "space-charge limited".

In the steady-state condition as many ions and electrons are entering the space-charge zones as are needed for the cell current. The others escape in the gas stream and may recombine in the cooler regions.

2) The second explanation may be postulated in the following way:

For low values of the cell voltage a small part of the produced ions and electrons are neutralized at the cathode or colleted by the anode.

For high values a steadily increasing number of ions and electrons are withdrawn from the gas stream until finally all the produced ions and electrons which are not removed by recombination are used to furnish the

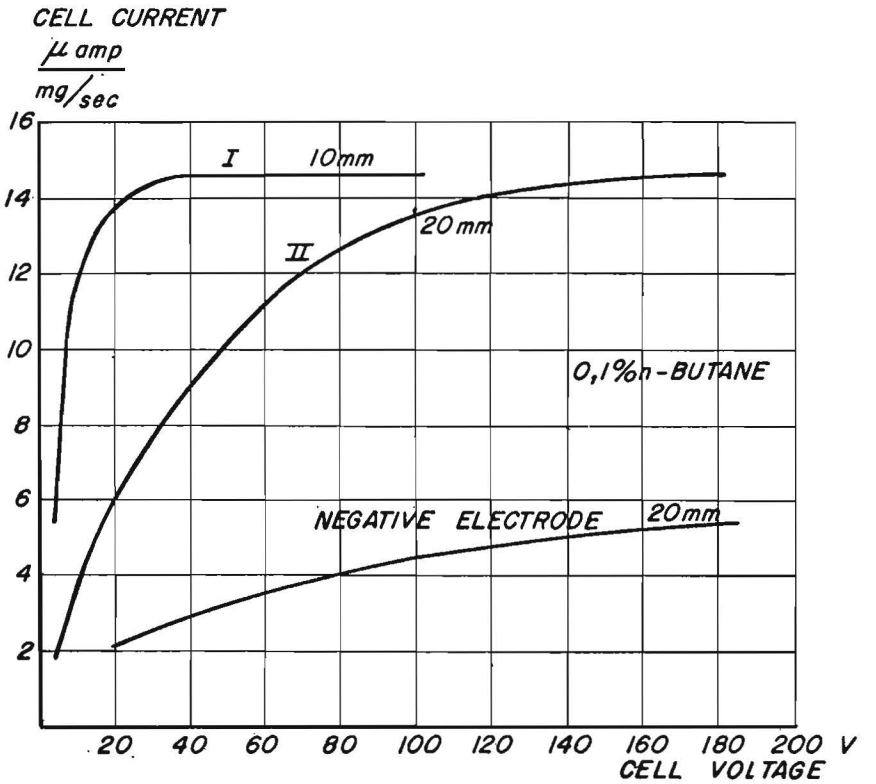

Fig. 7
Current/voltage relations of the detector cell for 0.1% v/v of n-butane

cell current. Under these conditions the gas stream above the electrodes becomes completely devoid of charged particles.

It has been demonstrated by simple experimentation that the gas stream above the electrodes is indeed free from ions and electrons. In the detector cell shown in fig. 1 an extra electrode was mounted above the platinum gauze. A potential of about 100 V with respect to the burner was applied to the gauze. It was now found impossible to collect any current with this electrode even when applying an imposed voltage between +100 and —100 V with respect to the burner.

This signifies that it has become impossible to transport electricity between the Pt gauze and the extra electrode or between the burner and the electrode. Thus the ions must have been completely "consumed" in producing the current between the burner and the gauze.

With an electrode mounted in between the burner and the gauze it was subsequently found possible to reduce the gauze current to zero.

Thus is has been shown that all the free electrons produced in the flame which are not removed by recombination are collected by the elec-

trode (or by the burner) only if the cell voltage is above a certain value. With higher voltages the cell current remains practically constant and thus the detector cell does not behave as a linear impedance. For this reason it is not satisfactory to use the term conductance to charaterize the electrical behaviour of the cell in relation to the organic vapour concentration. Under a given condition it is preferable to state the electric conductivity at a certain cell voltage or better to state the saturation current, i.e. the maximum current.

From the above-mentioned points it is also clear why the surface area of the electrode has no influence on the saturation current. It may play a minor role in the first part of the current/voltage curve.

2.2.4. *Ionization efficiency and ion concentration.*

The saturation current increases almost linearly with the amount of organic material entering the flame per unit time, if the concentration in the hydrogen is low. This implies that a constant portion of the organic molecules brings about the presence of ions.

For n-butane one positive ion is formed on every 10^5 molecules entering the cell. This has been calculated from measurements carried out by the author with hydrogen containing 10^{-6}-10^{-3} parts by volume of n-butane and with the assumption that only ions with a single charge are produced.

Measurements with other organic vapours have shown that apparently the ionization current is also proportional to the number of carbon atoms in the molecule*). Hence it may be preferable to specify the ion production by saying that one positive ion is formed for every 4×10^5 carbon atoms. It is striking that this figure is very near to the number of carbon atoms which should be contained by a carbon particle with 10^{-6} cm radius as mentioned in section 2.2.2.

Assuming that the above description is also valid for very high concentrations of hydrocarbons, it should now be possible to calculate the ion concentration directly behind the reaction zone of a n-butane/air flame. This turns out to be 6×10^{12} ions/ml, a figure which is very close to the value for the inner cone reported by Calcote viz. 10^{12} ions/ml.

2.2.5. *Recombination.*

Directly after the "birth" of the ions and electrons in the reaction zone of the flame recombination takes place. This decrease of the ion concentration goes with a rate equal to:

$$-\frac{dN}{dt} = a.\ [N^+].\ [N-]$$ in which a is the recombination coefficient.

Assuming that $[N^+]. = [N-] = N$ in the flame we find that N after a given time t becomes:

$$N = \frac{No}{1 + No.\ a.t.}$$ in which No is the value of N at time $t = 0$.

---

*) This is in agreement with the sensitivity on a molar base for various vapours as given graphically by McWilliam.

The longer it takes the ions and electrons to reach the electrodes, the more are lost by recombination. This effect is more pronounced for higher values of N. Hence the longer the distance between the electrodes the greater the loss of ions. This is demonstrated in fig. 7. Curve I represents the current/voltage relation of the detector cell with a distance of 10 mm between the electrode and the burner for a sample of 0.1% n-butane in the hydrogen. Above a cell voltage of 30V the current already attains its maximum.

For an electrode distance of 20 mm, however, a voltage of about 180V is required, which is represented by curve II. The increase of electrical field strength must accelerate the ions to a greater extent in order to diminish the time of travel between the electrodes and thus reduce the chance of an ion meeting an electron.

At much lower concentrations, the effect of recombination is less serious. Curve I and II are shown in fig. 8 for a sample of 5 ppm v/v of n-butane in hydrogen for an electrode distance of 10 mm and 20 mm respectivily. It appears that even for a long electrode distance the saturation current is already attained at about 40V.

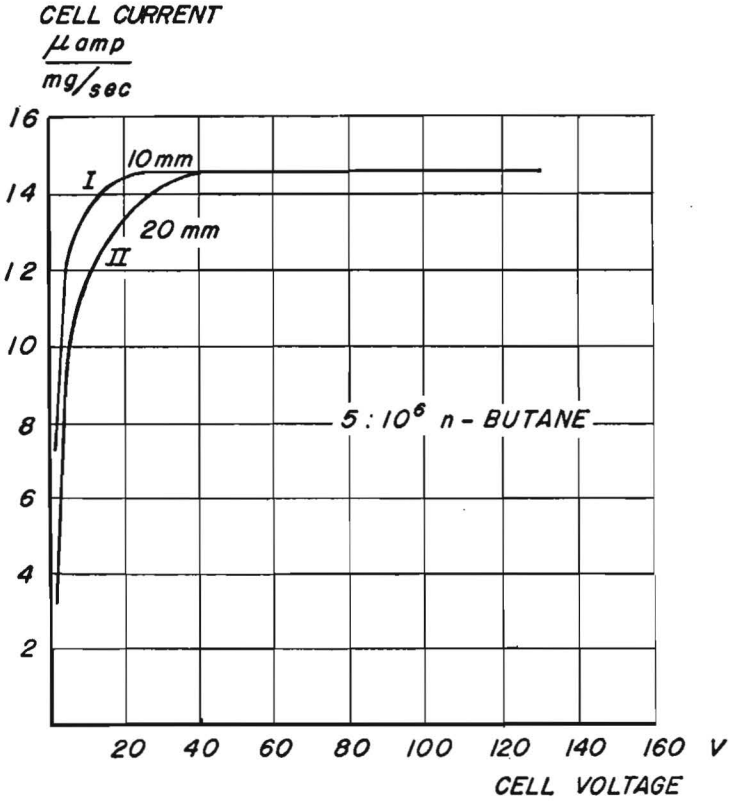

Fig. 8

Current/voltage relations of the detector cell for 5 ppm v/v of n-butane

2.2.6. *Electrode polarity.*

In the foregoing experiments the Pt gauze electrode has always been made positive with respect to the burner. It was found however that reversing the polarity results in an effect which is equivalent to that caused by increasing the electrode distance. With the negative electrode above the burner, an electrode distance of 20 mm and a concentration of 0.1% n-butane in the hydrogen, the current hardly exceeds one third of the saturation current even at voltages as high as 180 V (fig. 7).

A possible explanation may be the following:
The ions and electrons are produced in a zone 1-2 mm above the burner. The ions have a much lower mobility than the electrons. Thus, if the electrode is made positive, the ions have to travel a short distance towards the burner while the electrons must travel a longer path towards the electrode; it is the travel time of the slow ions, however, which determines the chance for recombination.

If the polarity is reversed the ions are moving upwards and have to traverse the longer path which consequently results in an increase of recombination.

This explanation, however, does not account for the case with the positive electrode and variable distance of fig. 7. If the travel time of the ions were the dominating factor, an increase of electrode distance should not shift the curve so far since the travel distance of the ions remains unaltered.

2.2.7. *Revised definition of sensitivity.*

As already mentioned before, the definition for sensitivity of the detector should be revised taking into account the following points:

1) For a given amount of organic material entering the detector cell per unit time, the cell current remains constant above a certain value of the cell voltage.

2) The saturation current is proportional to the amount of organic material entering the cell per unit time.

Thus the sensitivity should be expressed in μAmp/mg/sec since the saturation current is the only quantity which corresponds quantitatively to the vapour sample. For n-butane the sensitivity amounts about 15 μAmp/mg/sec. With a series resistor of $10^9\Omega$ this means 15 x 10^6 mV/mg/sec to the input of the electrometer. A practical example would be a flame ionization detector with a hydrogen gas flow rate of 1 ml/sec, producing a signal of about 150 mV over a series resistor of $10^9\Omega$ for a vapour concentration of 4 : 10^6 parts of n-butane in the hydrogen. Here the combustion air supply is 50 l/h and the cell voltage 90 V.

2.3. *Detection limits.*

2.3.1. *Restriction set by the hydrogen flame.*

The hydrogen flame of a detector, which is coupled to a chromatographic effluent of carrier gas only, already contains ions. This produces a physical restriction upon the detection possibilities and thus this phenomenon warranted a close investigation.

It was found that the ion concentration in the hydrogen flame in-

creases with the hydrogen flow rate through the apparatus and thus fluctuations on this flow rate must result in fluctuations on the detector signal. This effect produces a signal on the recorder, corresponding to the minimum detectable sample quantity.

If S_{cg} is the cell current without sample injection expressed in μAmp per ml/sec gas flow rate, and d the flow fluctuations expressed as a part of the total flow F_{cg}, then the noise n can be calculated from:

$$n = d \times S_{cg} \times F_{cg} \quad \ldots\ldots\ldots\ldots\ldots\ldots \quad (2)$$

Thus it is seen that flow stabilization of the gas stream is of primary importance.

The origin of ions in the hydrogen flame, which determines the character of S_{cg}, has been found to be due to several factors viz:

1) The combustion air contains traces of organic contaminants and alkali salts.

2) Contaminants which have been adsorbed at the inner metal surface of the apparatus tubing may find their way into the carrier gas.

3) The liquid phase of the column packing evaporates and contaminates the carrier gas.

4) Ions are formed from the hydrogen.

2.3.2. *Ions from contaminants.*

2.3.2.1. *Combustion air.*

The air passes through pressure controllers, flow meters etc. and is supplied to the detector cell at a flow rate of 50-100 l/h. On its way it takes along traces of grease and oil and other undesirable particles. Moreover, the air always contains organic contaminants especially in industrial areas.

An effective way to clean the air is by passing it through a quartz tube of about 30 cm long and 2 cm diameter filled with copper oxide and heated to 800° C. The greater part of the organic substances is burned in this way and the detector does not respond to the combustion products. In addition, the air is filtered through a fine glass filter to remove small dust particles and traces of alkali salts, which are always present. Sodium, for instance, is almost completely ionized on entering the flame.

2.3.2.2. *Apparatus tubing.*

Organic materials adsorbed at the inner surface of the copper tubing are taken along by the carrier gas and can be troublesome in sensitive work with the flame ionization detector. Even tubes of 5 cm length which are not carefully cleaned may cause an appreciable shift of the zero line on the recorder. Rubber tubing should not be used under any circumstances.

A solvent suitable for cleaning the inner walls has not yet been found. It was even noticed that after solvent treatment the detector cell usually appeared to have a higher conductivity.

A good cleaning method consists in purging the whole apparatus at low pressure by connecting the detector end of the apparatus to a vacuum "supply" while allowing air to enter via a restriction and a glass

filter. A perceptible stream of gas must be maintained while the temperature should be raised as high as possible. It is preferable to continue this process for several days. A convenient arrangement is to mount a special vacuum connection with a three-way valve near the detector. The cleaning operation described above can then be carried out without disconnecting the detector cell.

2.3.2.3. *Column packing.*

The liquid phase of the column packing may vaporize and contribute to the ion concentration in the detector cell. This effect increases with the temperature. Hence the column packing selected should possess a low vapour pressure. If only a low column efficiency is needed very low concentrations can be detected by using a solid packing such as silica gel.

2.3.3. *Ions inherent to the hydrogen flame.*

With a very clean apparatus and using filtered air, a low but finite conductivity of the flame was still observed even without a column. This raised the question whether hydrogen could account for all or a part of this conductivity. According to Knewstubb and Sugden[21] ions can exist in a hydrogen flame. By means of mass-spectrometric observations they detected H_3O^+ ions and a fairly high peak at mass 18 which was thought to be due to H_2O^+.

It is theoretically possible to eliminate the effects of the factors previously discussed viz. contaminants from the air and the apparatus tubing. With the hydrogen-produced ions it is unlikely that the effect can be eliminated and thus it can be seen that the ultimate physical restriction on the minimum detectable level is introduced by the properties of the hydrogen. It results in a limitation which can only be improved by better flow stabilization. The effect is small, however, and does not interfere with most cases of routine analysis.

For highly sensitive work such as used in the technique for measuring air pollution, the ions from the hydrogen however are going to play an important part.

It is very difficult to distinguish the ions produced by the hydrogen itself from those caused by the contaminants. Shuler and Weber[17] have carried out electron concentration measurements on the hydrogen/oxygen flame with electromagnetic radiation. Their measurements were seriously disturbed by "background ionization" caused by traces of alkali salts in the air, but they were able to correct their results for this. It does not seem however that they have taken into account other possible contaminations, the effect of which could be many times higher than that of the hydrogen. It is thus possible that the figures of Shuler and Weber are somewhat too high.

The following method was therefore evolved to measure and distinguish the ions produced by the hydrogen alone from those produced by the contaminants, even when those contaminants are in the hydrogen itself.

The basic idea of this method is that a small sample of purified hydrogen is added to the flame for a short time. The increase in ioni-

zation caused by this addition is measured. The purification of the hydrogen is obtained chromatographically in the following way.

Through a column one meter in length and filled with silica gel, nitrogen is passed into the detector cell. The nitrogen flow rate is controlled at 1 ml/sec. After the column hydrogen is added to the gas stream also at the rate of 1 ml/sec. Combustion air is supplied to the detector cell at 50l/h. All the gas streams are well controlled and the whole set-up is placed in an air thermostat.

The signal which is now obtained from the detector is caused by the contaminants as well as by the hydrogen. This signal is constant and is offset electrically.

Now a sample of 5ml hydrogen is injected in the carrier gas stream. The sample passes the column and enters the detector cell where it causes an additional ionization during a short time. This momentary signal increase is caused by pure hydrogen alone. The possible contaminants arrive later because of the separating properties of the column. From the recorded peak area the specific contribution of the hydrogen can be calculated.

This hydrogen effect, which can be regarded as the sensitivity of the detector for hydrogen (S_h), can be expressed in the conventional dimensions. It was found to be $S_h = 275 \times 10^{-6}$ μAmp/mg/sec. Expressed in another way this means that hydrogen produces the same signal as an ideal carrier gas which itself produces no signal at all but which contains 0.7 ppm v/v n-butane.

2.3.4. *Ultimate detection limit.*

According to formula (2) the noise from the detector can be found from: $n = d \times S_{cg} \times F_{cg}$ μAmp. It has been seen that S_{cg} comprises the signal from both the contaminants and the hydrogen. In the most favourable case it is the latter factor only that is responsible for the noise. In that case formula (2) can be written as:

$$n = d \times S_h \times F_h \ \mu\text{Amp}$$

in which F_h is the hydrogen gas flow rate, which may be equal to F_{cg} if hydrogen is used as the carrier gas. The value of d refers to the fluctuations on F_h. The minimum detectable concentration Δ can then be found from formula (1) and (2):

$$\Delta = \frac{\text{noise on the zero line}}{S \times F_{cg}} = d \times \frac{S_h}{S} \times \frac{F_h}{F_{cg}} \quad \ldots\ldots\ldots\ldots\ldots\ldots (3)$$

It can be seen that this limit can be improved by increasing the value of F_{cg} with respect to that of F_h. This is possible by using nitrogen as carrier gas and adding hydrogen after the column. F_{cg} can then be increased until the flame is extinguished owing to the excess of nitrogen. In practice a ratio of 1 : 2 can be used for $\frac{F_h}{F_{cg}}$. This improvement by a factor of two in the signal/noise ratio is hardly worth while. There is however another advantage in this system.

Since the hydrogen is added after the column its stream is not interrupted during the process of sample injection. Thus the problem of

the flame being extinguished by the sample injection is obviated. Moreover the addition of nitrogen in the flame lowers the flame temperature which may improve the signal/noise ratio as will be shown later.

The value of $\frac{S_h}{S_{cg}}$ is of the order of 2×10^{-5} while that of $\frac{F_h}{F_{cg}}$ does not differ much from 1. A numerical expression for (3) is thus given by:

$$\Delta = d \times 2 \times 10^{-5} \text{ mg sample/mg hydrogen.}$$

2.3.5. *Theoretical consideration of the ion production in a hydrogen flame.*

The ionization mechanism in a flame is still an unknown process. The following discussion has certainly many weak points and must therefore be considered as an attempt only to explain the ion production theoretically.

The ionization process of a species A may be represented by the following equation: $A \underset{k_2}{\overset{k_1}{\rightleftharpoons}} A^+ + \text{electron}$ in which k_1 and k_2 are the rate coefficients. For this reaction the reactant A has to overcome an energy barrier equal to eV_i in which V_i is the ionization potential and e the charge of an electron. In the equilibrium condition the number of particles A being ionized per second equals the number of ions which recombine with an electron, and this may be represented by:

$$k_1 [A] = k_2 [A^+]. [e]$$

in which [A], [A+] and [e] are the concentrations of the reactants and the products respectively. Assuming that $[A^+] = [e]$ which means that no multiple ionization occurs the equation becomes:

$$k_1 [A] = k_2 [A^+]^2 \quad \ldots\ldots\ldots\ldots\ldots\ldots (4)$$

The equilibrium constant $K = \frac{[A^+]^2}{[A]} = \frac{k_1}{k_2}$ can be found from Saha's relation[15]:

$$\log K = \log \frac{(g-).(g+)}{(g_o)} + 15.38 + 3/2 \log T - \frac{5040}{T} V_i$$

in which (g−), (g+) and (g_o) are the statistical weights of the species and T is the absolute temperature.

The components in the gas plasma of a hydrogen/air flame are mainly H_2O, N_2 and O_2 and in lesser quantities H_2 and CO_2. From these, the most probable component to cause ion production is H_2O, a statement which is based on the following points.

1) The ion production in the flame increases with the hydrogen flow rate, a fact which suggests that the ions originate from a H_2 combustion product.

2) The ionization potential of H_2O is 12.6V which is the lowest of the gases present if we except O_2.

Oxygen may also play an important part but it does not make much difference whether the calculations are based on H_2O or O_2. Assuming

a temperature of 2200° K*) the equilibrium constant K· for H_2O according to Saha's relation then turns out to be about 10^{-10}. This means that 5.2×10^4 ions per ml H_2 are required for thermodynamic equilibrium. From measurements of the hydrogen ionization this value was found to be 10^8 ions per ml H_2, a figure which is considerably higher.

If, however, transport of electricity occurs through the flame plasma, a forced recombination of ions with electrons is superimposed upon the process, and this may influence the equilibrium conditions. By adding this effect to the right-hand side of equation (4) we obtain:

$$k_1 [A] = k_2 [A^+]^2 + \frac{i}{e} \quad \ldots\ldots\ldots\ldots\ldots\ldots\ldots\ldots (5)$$

where $\frac{i}{e}$ expresses the number of ions recombined per second as a result of the cell current.

From the theory of absolute reaction rates it is possible to estimate the numerical values of equation (4). This gives an approximate idea of how equilibrium is attained, and at what rate the process goes in both directions if the concentrations are expressed in number of particles per ml hydrogen the result is:

$k_1 [A] = k_2 [A^+]^2 =$ of the order of 10^{21}.

This means that per ml hydrogen about 10^{21} molecules are ionized every second, while at the same time as many recombinations take place. The value of $\frac{i}{e}$ from equation (5) amounts to about 10^8. Hence it is very unlikely that this should influence the ion concentration appreciably and the effect of the cell current must play its part in another way. At this stage the phenomenon that the space above the electrodes is completely free from ions becomes once more a factor of potential importance in the present theory. It is not very probable that this is caused by an abrupt decrease in the temperature. The temperature may decrease continuously in an upward direction, but a sudden drop just at the location of the electrodes is not to be expected. Another explanation may account for these points and can be formulated as follows:

The ionization process is concentrated in a small area in the flame and within this area there exists thermodynamic equilibrium. Most of the ions and electrons produced are separated by the action of the electric field between the electrodes and have no chance to recombine with each other. A minority however must be able to satisfy equation (4) and if a thermodynamic equilibrium exists, this number can be found from Saha's relation. Hence the true ion concentration amounts to 10^8 ions per ml hydrogen from which a number viz. 5.2×10^4 ions participate effectively in the equilibrium. This representation is analogous to a chemical process in which the reactants are in the liquid phase while one product is removed from the process by precipitation.

---

*) The temperature of the detector flame has not been measured and the value is based on literature data. The figure is a maximum for what can be expected from a lean diffusion flame.

2.4. *Flow stabilization.*

From the previous discussions it has been seen that flow stabilization is of primary importance for lowering the detection limits. The higher the background signal the more must the relative flow fluctuations be kept as small as possible.

In the case where the hydrogen alone is responsible for the background signal the hydrogen flow must be stabilized carefully. This however does not imply that the other streams can be neglected. Since the flame temperature has also a great effect on the ionization process the carrier gas and air stream should also be controlled.

It has been found that the most important factor determining the flow stability is the apparatus temperature. The resistance for flow of the apparatus tubing and especially of the needle valves is very sensitive to temperature changes. The best results were obtained by thermostating the whole set-up including the pressure controllers, needle valves and flow meters.

Another point is the sensitivity of the needle valves to mechanical vibrations. This can be partially overcome by mounting a capillary restriction in the flow path so that the total resistance of flow is mainly determined by the capillary and not by the needle valves. The influence of the needle valves must of course be still sufficient to provide the required flow adjustment.

The use of a reference cell in order to obtain more zero-line stability has already been mentioned. The reference cell should then be fed from the same controllers as the detector cell. The fluctuations in both cells must be identical so that they compensate each other in the electrical circuit.

2.5. *Theoretical consideration of the signal/noise ratio.*

The signal/noise ratio for a given vapour indicates how many times the signal of a given concentration exceeds the fluctuations on the zero-line. This depends upon the sensitivity of the detector for that particular vapour and upon the value of the background signal in that condition and the constancy of the carrier gas flow rate.

The fluctuations on the carrier gas flow may be considered as a constant factor for a certain apparatus. Thus the signal/noise ratio is determined by ionization properties of the vapour and by those substances in the carrier gas causing the background signal.

No matter in what way the ionization process takes place exactly, we can ascribe an ionization potential to the vapour to be detected and to the above-mentioned substances. Previously it was already shown that no exact results were obtained by applying Saha's relation. However it seems reasonable to suppose that the ion production is still proportional to the equilibrium constant calculated according Saha.

Let V_s be the ionization potential of the vapour to be detected and V_c that of the substances which are responsible for the background signal of the detector, then the signal/noise ratio N must be proportional to:

$$N :: \frac{10^{-5040Vs/T}}{10^{-5040Vc/T}}$$

If V_c is greater than V_s, which is the case when the zero signal is caused by the hydrogen then the equation becomes:

$N :: 10^{5040(Vc-Vs)/T}$ in which the exponent is positive. If this ratio is to be as high as possible, the temperature T must be as low as possible. Thus from a theoretical point of view the temperature of the flame should be held as low as possible to obtain the best signal/noise ratio.

Unfortunately, it is very difficult to confirm the above theory experimentally. The temperature of the flame can be raised by increasing all the gas streams proportionally, that is by making the flame bigger. The effect of this is shown on fig. 9. Curve I represents the sensitivity for n-butane as a function of the gas flow rates, while curve II gives the background signal under the same conditions on an arbitrary scale. It seems that he background signal increases faster than linearly. In curve II however is incorporated the effect of liberating contaminants from the apparatus. In which way this phenomenon depends on an increase in gas flow rate is not known and it is thus wiser not to make a definite statement on the significance of fig. 9.

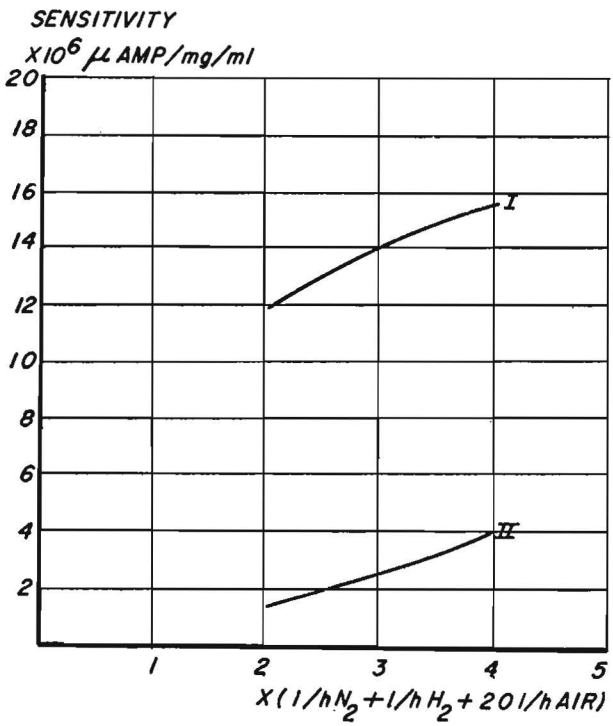

Fig. 9

Influence of the flame size upon the sensitivity and the background signal.

2.6. *The influence of different parameters.*

Although the effect of varying the different parameters upon the properties of the flame ionization detector is not always understood, a systematic study of them is desirable. For an apparatus with a certain required performance one then knows which factors have to be taken into account.

The major points of the detector cell construction have already been discussed. In the detector cell shown in fig. 1 an electrode distance of 10 mm and a positive polarity of the platinum gauze with 90 V cell voltage gives a linear performance upto 0.5% vapour concentration in the cell.

The flow stabilization of the carrier gas stream and the hydrogen stream have to be considered with respect to the minimum detectable vapour concentration. For this the zero signal obtained under working conditions should be measured. In general this signal is determined by the liquid part of the column packing. It can then be calculated which fluctuations of the gas flow rate are tolerable. In most cases of routine analyses the hydrogen ionization can be neglected. The combustion air flow rate has a slight influence upon the sentitivity of the detector. This effect is represented in fig. 10. A small increase of the sensitivity occurs

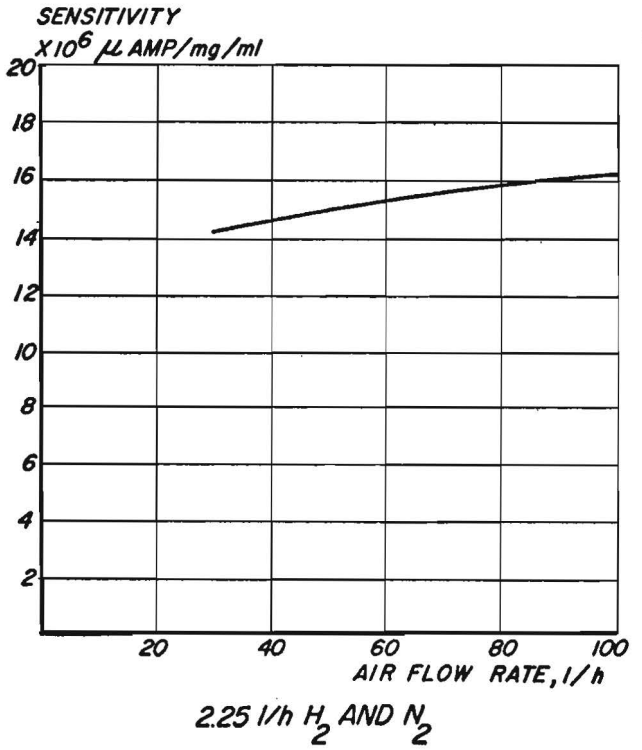

Fig. 10
Sensitivity as function of the combustion air flow rate.

with higher air flow rates. The air flow controller can thus be very simple and must be good enough not to influence the signal during an analysis. An air flow rate of about 50 l/h is suitable for a hydrogen flow of 2.5 l/h.

It was determined that the carbon dioxide in the air was not responsible for the zero conductivity of the cell.

Another factor affecting the sensitivity of the detector is the ratio hydrogen/nitrogen. A small increase in sensitivity is obtained by introducing nitrogen. A ratio between 1 : 1 to 1 : 1.5 seems to give the optimum results. An increase of 25% in the sensitivity is then obtained in comparison with hydrogen alone. An additional advantageous effect is that the hydrogen ionization seems to decrease slightly on the addition of nitrogen.

3. PRACTICAL APPLICATION OF THE HYDROGEN FLAME IONIZATION DETECTOR.

3.1. *Review of the properties of the detector.*

The most outstanding feature of the detector is certainly its very high detectivity. It is even doubtful whether any advantage is to be gained by looking for a detector with still higher detectivity. The vapour pressure of the "immobile" phase of the column packing is now becoming a major problem. The presence of evaporated immobile phase in the carrier gas is the dominating factor in detection in the low concentration range.

Together with the high detectivity, the small effective volume of the detector is highly advantageous. There is only the junction between the end of the column and the detector cell that may introduce a volume effect, but only because of gas diffusion. This in contrast to the radiological detectors for instance, by which every extra volume directly causes a loss in speed of response. The flame ionization detector is thus particularly suitable in combination with high-efficiency columns using very small sample sizes.

The linearity of the detector is very good as long as the concentrations do not exceed 0.5%. Above this value the sensitivity tends to decrease. Quantitative interpretation based on measuring the peak areas on the chromatogram have turned out to be accurate within 0.5%. This is true over a wide range from far below the ppm range up to 0.5% in the cell.

The mechanical construction of the cell is very robust and insensitive to mechanical vibration, while the temperature limits are set only by the insulation material of the high impedance electrode. It may even be possible to operate the detector cell with ceramic insulation several hundred degrees centigrade higher than any other detector.

The electronic circuit is more complicated than for the katharometer but less complicated than that required for the radiological detector using argon as carrier gas. Hitherto there are not many commercially available instruments which are directly suitable for use with the detector, but it is to be expected that these will become available as soon as the instrument companies realize the possibilities.

One of the disadvantages of the detector that should be mentioned is that it is not sensitive for most inorganic materials. Further, the analytical method is destructive and the sample is burned and therefore no longer available for futher examination. Thus a series analyzing system, for instance in combination with a mass-spectrometer, cannot be realized directly. For this purpose, however the detector may as a rule be connected as "side stream" analyzer, which is possible because it needs only very small quantities.

3.2. *Interpretation of the chromatogram.*

The interpretation of the chromatogram obtained with the flame ionization detector differs somewhat from that for the conventional detectors. The detector output signal V is proportional to the amount of material entering the cell per unit time, q (mg/sec), so that:

$$V = S \times q \longrightarrow q = \frac{V}{S}$$

Thus the total amount of sample (Q) is found from:

$$Q = \int q dt = \int \frac{V}{S} dt$$

Hence for one component the total amount is found directly from the value of the recorded peak area and this is independent from the carrier gas flow rate. This contrasts with the katharometer and the radiological detectors where the carrier gas flow rate is incorporated in the formulae.

3.3. *Sensitivity for various vapours.*

The flame ionization detector is sensitive to all organic substances; more specifically, no organic material has as yet been found to which it does not respond. Further it is sensitive to CCl_4 but not to CS_2. There is also weak response to CO.

The sensitivity for n-butane was measured by the author to be 15 μAmp/mg/sec. This value, however, depends upon several factors which have already been discussed and thus must not be considered as an absolute figure. For quantitative analyses a relative factor must be determined for every vapour to interpret the chromatogram.

In general the following rule gives a good approximation: For hydrocarbons the sensitivity is proportional to the percentage by weight of carbon in the component. This has been investigated for a number of mixtures containing various hydrocarbons with different concentrations. The peak areas on the chromatogram must thus be multiplied by a factor C which is for a given component:

$$C = \frac{\text{molecular weight}}{(\text{number of carbon atoms per molecule}) \times 12}$$

The validity of this rule may be illustrated by the following tables, which give the results of a series of analyses of mixtures of known composition. The first column gives the actual sample composition. The second column gives the recorded peak area in such a way that the sum of the figures is 100. The C-factor is given in the third column and the result of the multiplication of the peak area by this factor is found in the last column.

Table 2

	Actual composition %	Recorded peak area	C-factor	Results %
n-hexane	10.0	8.83	1.19	9.5
benzene	20.0	20.5	1.08	20.0
n-heptane	10.0	9.04	1.19	9.7
toluene	60.0	61.6	1.09	60.8

The rule seems to be particularly good for straight-chain paraffins as shown in the next table:

Table 3

	Actual composition %	Recorded peak area	C-factor	Results %
n-C_{12}	8.8	8.8	1.18	8.8
n-C_{13}	20.8	20.6	1.18	20.6
n-C_{14}	30.0	30.1	1.18	30.1
n-C_{15}	40.4	40.5	1.18	40.5

As soon as other atoms come into the picture the sensitivity of the detector seems to decrease. This decrease is not a constant factor. For components containing oxygen a fairly good approximation can be obtained by splitting off as many CO_2 groups as possible and counting only the residual carbon atoms for the C-factor. This has been done in table 4.

Table 4

	Actual composition %	Recorded peak area	C-factor (corrected)	Results %
n-C_{16} paraffin	10.1	13.3	1.18	10.0
α-methylnaphthalene	29.9	43.2	1.08	29.8
dimethyl terephthalate	60.0	43.6	2.15	60.2
n-C_9 paraffin	9.4	18.1	1.18	8.2
ethanol	90.6	81.9	3.07	91.8
benzene	48.6	55.8	1.08	50.0
diethylether	20.1	14.1	1.71	19.9
n-butane	31.3	30.1	1.21	30.1

When components containing Cl are handled according to the foregoing method, insufficient accuracy is obtained. This is shown in table 5. The method is thus suitable only for rough estimations. For accurate analyses it is still necessary to calibrate the detector for all components.

Table 5

	Actual composition %	Recorded peak area	C-factor (corrected)	Results %
chloroform	43.9	16.8	10.0	42.0
carbon tetrachloride	40.6	11.7	12.8	37.6
n-heptane	7.5	33.2	1.19	9.9
toluene	8.0	38.3	1.09	10.5
methyl chloride	37.9	21.1	4.2	37.2
n-butane	30.1	74.2	1.21	37.7
carbon tetrachloride	31.5	4.7	12.8	25.2

3.4. *A chromatographic apparatus for detecting very low vapour concentrations.*

An apparatus for very low vapour concentrations of the more volatile hydrocarbons containing upto 5 carbon atoms is shown schematically in fig. 11. It can be used for air pollution analyses but it was primarily designed to operate the flame ionization detector at its ultimate limits.

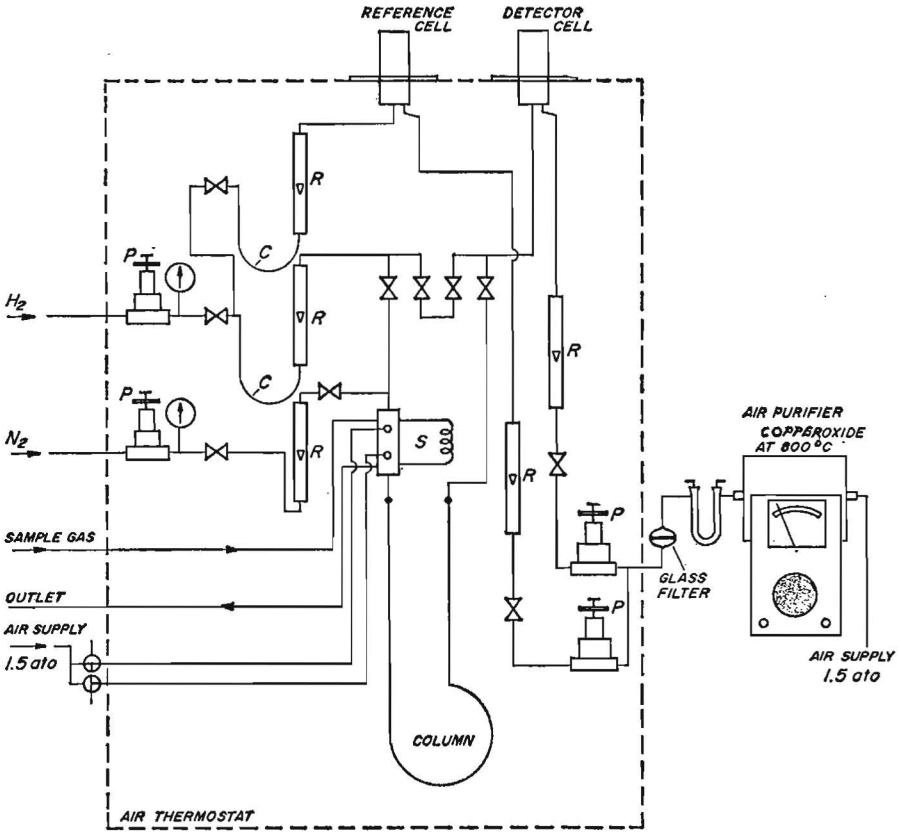

Fig. 11

Schematic diagram of chromatographic apparatus.

The column is one meter long and is filled with silica gel. A "by-pass" of the column is provided to check the contribution of the column packing to contaminants in the carrier gas. Nitrogen or hydrogen may be used as a carrier gas and a hydrogen inlet is also provided after the column. Rotameters are installed to measure the gas flow rates. It turned out that soap film meters introduce too much contaminant in the gases and so are unsuitable for this work.

Flow control of the hydrogen streams is achieved by precision pressure regulators which are placed in series with a needle valve and a capillary

tube. The effective diameter of the capillary tube has been reduced by inserting a copper wire through it so that the flow resistance of the hydrogen flow path is determined by the capillary. All the controllers, needle valves and all tubing etc. after the pressure regulators are placed in an air thermostat the temperature of which is controlled within 0.1° C. The hydrogen supply for the reference cell is derived from the same controller as that for the measuring cell.

The combustion air is purified by passing it over copper oxyde at 800°C as described in section 2.3.2.1. After this treatment it passes through a glass filter to remove any suspended particles.

The gas injection system is of the type described by Hooimeyer, Kwantes and van de Craats[22] and has a sample volume adjustable in steps to 1, 5, 10 and 20 ml.

The zero signal obtained from the measuring cell was equivalent to about 1 ppm n-butane and thus was mainly determined by the hydrogen. Coarse adjustment of the zero line, was carried out by varying the hydrogen supply of the reference cell while the fine adjustment was made electrically. The flow stabilization and the application of a reference cell resulted in zero-line fluctuations equivalent to a vapour concentration of less than 0.001 ppm n-butane or 2.6×10^{-12} g/ml. These fluctuations were synchronous with the on-and-off action of the temperature controller and thus apparently were caused by the small temperature changes within the 0.1°C range necessary for operation of the controller.

A chromatogram obtained with this arrangement is shown in fig. 12. For this a sample of 7 ml was injected containing:

0.8 ppm CH_4
1.1 ppm C_2H_6
1.2 ppm C_3H_8
0.9 ppm C_4H_{10}

diluted with nitrogen. Nitrogen was used as carrier gas with a flow rate of 2.5 l/h while the hydrogen was added after the column also with a flow rate of 2.5 l/h. The combustion air was supplied at 50 l/h for both the measuring cell and the reference cell. The area of the peak of C_2H_6 corresponds to about 10^{-8}g. The concentration in the top of the peak is about 0.25 ppm.

3.5. *Application to capillary columns.*

The most promising application of the flame ionization detector is beyond doubt that in combination with capillary columns. The introduction of these columns has increased the fractionating power considerably. They consist mainly of a capillary tube having an internal diameter of approximately 0.25 mm, which is coated on the inner wall with the stationary phase. Column lengths of up to 100 meter can be realized without an appreciable decrease of the number of theoretical plates per unit length. A theoretical treatment of this type of column has been given by Golay[23].

The gas flow rates used with these high-efficiency columns are very low and can be of the order of 1 ml/min. Also the sample sizes are very small and are usually between 0.1 and 10 μg. This calls for a detector

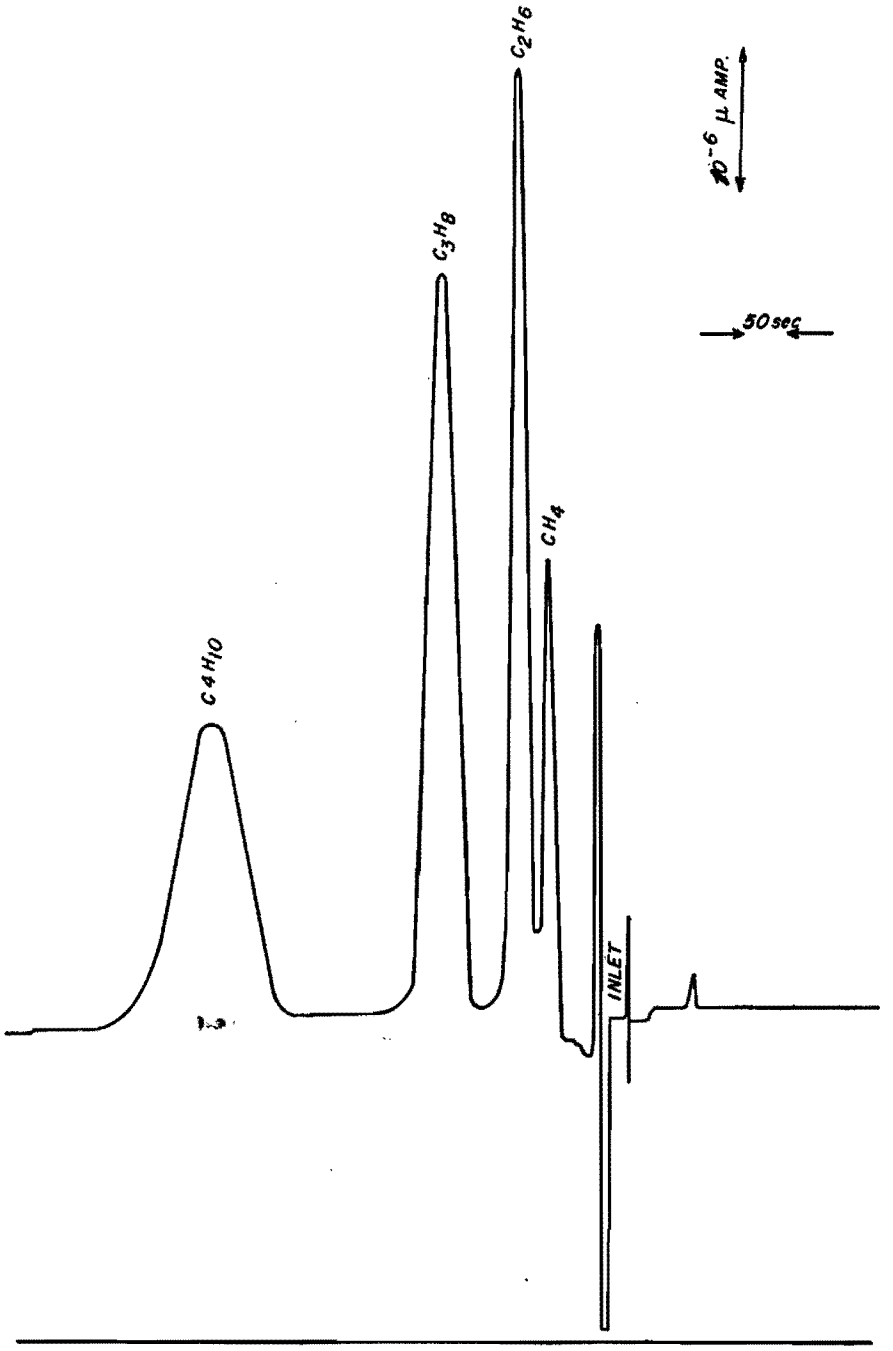

Fig. 12
Chromatogram of a 4-component mixture.

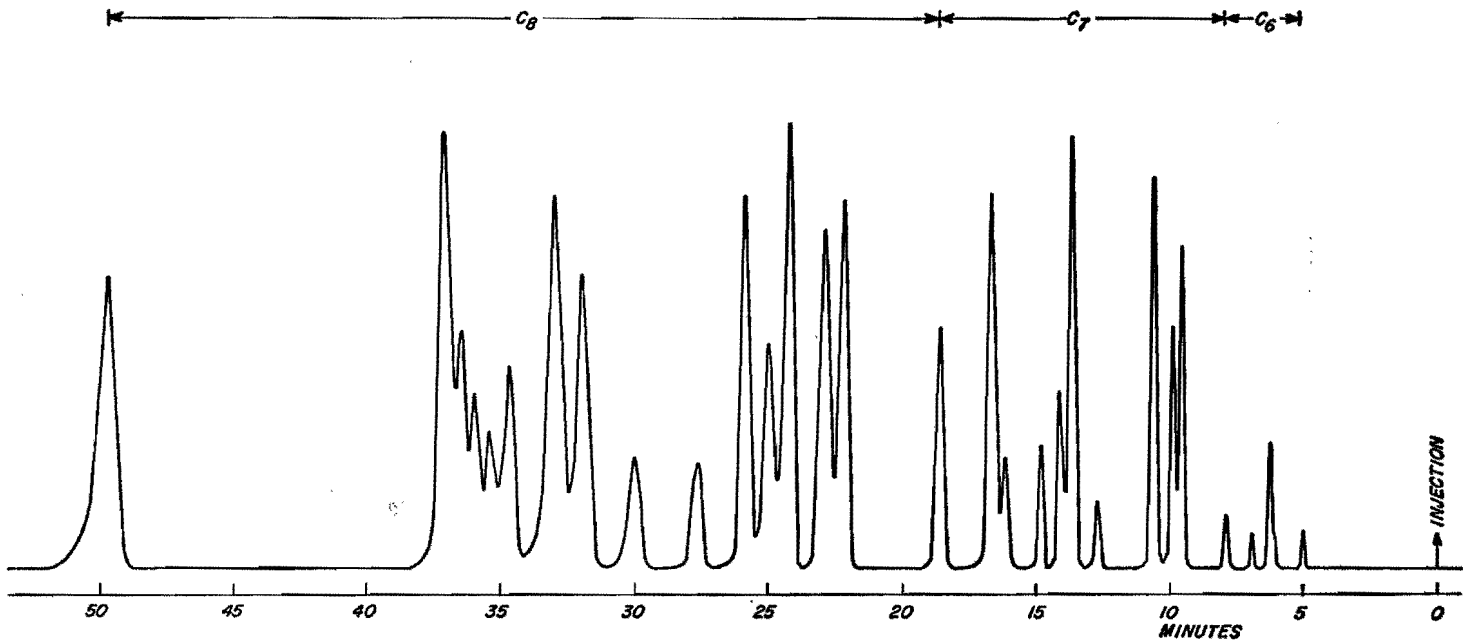

Fig. 13

Chromatogram of a 34-component mixture.

with a very high detectivity and a very small volume. The hydrogen flame ionization detector adequately satisfies these requirements.

A chromatogram obtained with a capillary column and a hydrogen flame ionization detector is shown in fig. 13. The column in this case had a length of 30 meter and consisted of 0.25 mm copper tubing coated with a stationary phase of squalane. The efficiency of the column was about 28500 theoretical plates as measured on the last peak. Hydrogen was used as carrier gas with a flow rate of 0.8 ml/min. The sample, of which 0.15 μg was injected, contained 34 components in the C_6-C_8 range. The combination of the flame ionization detector with capillary columns brings within the bounds of possibility many analytical determinations as yet undreamt of by analysts, and which are practically unrealizable with any other instruments at the present time.

Appendix.

Design data for the electronic circuit.

The basic circuit of fig. 4 should always be used. The point of earthing has already been suggested by the author, but other positions may be chosen. By earthing the connection between the detector cell and the d.c. source the following points should be considered. One side of the cell is earthed which is advantageous for screening the inner electrode of the cell. The fact that one side of the d.c. source is earthed means that this can be mains-supplied. The only consequence is that the "low" terminal of the electrometer has a d. c. potential of about 100 V with respect to earth. This can be realized with several circuits but it should not imply that the recorder must operate at 100 V with respect to earth. Most of the standard self-balancing potentiometer recorders may not have more than 5 - 10 V between their input terminals and earth.

The other possibility is to earth the connection between the d.c. source and the series resistor. In this case there are no particular problems that are related to the d.c. source and the electrometer, but the detector should be completely isolated with respect to earth, which necessitates, a special construction to isolate both electrodes from the apparatus tubing.

The series resistance should be variable and suitable values for it are 10^7, 10^8, 10^9, and $10^{10}\Omega$. A value higher than $10^{10}\Omega$ should not be used because in combination with the cable capacity the time constant becomes too large. In general the series resistors should not be changed during one analysis but the range selection should be made in the electrometer. The series resistors may thus be of moderate accuracy (20%).

The zero-shift facilities should be introduced at the input circuit for instance as indicated in fig. 6 by R_1-R_5 and should cover a range of 200-300mV with the possibility of fine adjustment so that an offset of 1mV can easily be made.

No provision need in general be made for connecting a reference cell; providing this would make the circuit suitable also for the beta-ray detector.

The electrometer must have an input impedance which is high in comparison to the series resistor (20-100 times) and the full-scale range must have an expansion of 20-30 times. An arrangement such as 1, 3, 10, 30, or 1, 2, 5, 10, 20 for full-scale range is very suitable.

The overall accuracy including effects from drift, noise and linearity and the stability of the "zero set" circuit should be better than 1% full-scale. The output impedance of the electrometer depends of course upon the recording instrument, but in general a 2.5mV recorder is used which must be fed from a source with an internal impedance of less than 500Ω. The voltage range depends upon the full-scale concentration and the series resistance. As an approximation the relation between full-scale voltage, full-scale concentration and series resistance is listed in table 6.

Table 6

Full-scale concentration*)	Series resistance. $10^6\Omega$	$10^7\Omega$	$10^8\Omega$	$10^9\Omega$	$10^{10}\Omega$
1 ppm				30mV	300mV
10 ppm			30mV	300mV	
100ppm		30mV	300mV		
0,1%	30mV	300mV			

Summary.

The field of application of gas chromatography has expanded rapidly over recent years, with the result that ever-increasing demands are made on the detectors employed. The detector is attached to the end of a gas-chromatography column for the purpose of registering quantitatively the various components which emerge successively with the carrier gas from the column. Thus the detector must be capable of determining very low concentrations. This is particularly the case where for example pollution and contamination of the atmosphere are to be analyzed. A second important requirement of the detector is that the gas volume should be as small as possible, since this has a direct influence on the resolving power of the whole system. In applications where capillary columns and very low rates of gas flow are encountered the latter problem is particularly difficult.

The functioning of a detector depends upon the measurement of differences in value of physical quantities of the carrier gas and the components to be detected. The larger these differences the easier it is to improve the detection limits. This is influenced among other things by the choice of carrier gas.

In the hydrogen flame ionization detector, described in this thesis, the very large differences in the ionization of hydrogen and of organic materials in the hydrogen flame are used. The ion concentration in a pure hydrogen flame is extremely low. By introducing small quantities of organic materials into this flame a very significant increase in the ion concentration occurs.

The difference in ionization of hydrogen and organic materials is much greater than one would expect from theoretical considerations. It would appear that the ionization potential for organic materials becomes much lower the moment they enter the flame. Stern's explanation for this

*) The concentrations are given on a volume base for n-butane.

phenomenon is generally accepted. According to this the ions are not formed by thermal ionization, but by thermal emission by small carbon particles, which are formed in the flame during the combustion process. Thus the dominating factor is the work function of carbon and not the ionization potential of the organic components.

The production of ions in the flame is determined by measuring the current that flows between two electrodes in the direct vicinity of the flame, when an electric voltage is applied. Usually the metallic burner is utilized as one electrode and a platinum gauze as the other. The measurement of the current is replaced by the measurement of a potential across a high resistance by means of an electrometer. The signal obtained in this manner from the hydrogen flame is proportional to the quantity of organic material which passes through the flame per unit time. As a result of this the effect of the volume of the detector cell is different from that for detectors which react to the concentration. The diluting influence which the volume exerts on the concentration has no effect on the quantity of material flowing per unit time. Nevertheless some deterioration occurs in the response because of gaseous diffusion, but the volume effect of the flame ionization detector is usually very small.

The term "sensitivity" as applied to detectors is not satisfactorily defined. It indicates the magnitude of the signal the detector gives for a definite component concentration in the carrier gas. Thus sensitivity does not express the value of the smallest concentration of a component still detectable. In order to do this the sensitivity of the detector must be specified together with the noise on the detector signal.

Ions already exist in the blank hydrogen flame and mainly originate from impurities in the gases used, from the air or from materials of the column itself. In addition to these, totally purified hydrogen itself creates a certain quantity of ions on combustion. A method is described in this thesis for measuring the extent of hydrogen ionization independently of the ions caused by the impurities present. It appears that the hydrogen itself contributes a signal equivalent to a contamination of approximately 0.7 ppm n-butane.

The presence of ions in the blank hydrogen flame imposes a physical limitation on the detecting possibilities. Since the quantity of ions produced is proportional to the rate of flow of hydrogen any fluctuations in this flow will result in a fluctuation in the signal i.e. noise. The limits of detection are thus determined by the technical ability to stabilize this gas flow.

An arrangement is described in which special attention is paid to this stabilization problem. A lower limit of 0.001 ppm n-butane is achieved, a value 10^4 times lower than that obtainable with the widely used detector based on thermal conductivity.

The very low limit of detection in conjunction with the minute volume effect makes the flame ionization detector especially suitable for use in combination with capillary columns. This thesis ends with a description of an analysis performed with such a combination, and the resolution of 34 components from a sample containing substances in the C_6 to C_8 range.

In an appendix some details of the electrical circuit are given.

Samenvatting.

Het werkgebied van de gaschromatografie heeft zich de laatste jaren zeer snel uitgebreid. Dit heeft o.a. tot gevolg gehad dat er steeds hogere eisen werden gesteld aan de gebruikte detector.

Deze detector bevindt zich aan het einde van een chromatografische kolom en heeft tot taak de diverse componenten die achtereenvolgens met het draaggas meekomen quantitatief te meten. Hierbij komt als eis naar voren dat de detector in staat moet zijn om zeer lage concentraties aan te tonen. Dit is b.v. bij de analyse van luchtverontreinigingen een zeer gewenste eigenschap.

Een andere belangrijke eis is dat het effectieve gasvolume van de detector zo klein mogelijk moet zijn. Dit heeft n.l. directe invloed op het scheidend vermogen van het gehele systeem. In het bijzonder bij de toepassing van capillaire kolommen, waarbij zeer lage gasstromen gebruikt worden, is dit een bijzonder lastig probleem.

De werking van detectoren berust op de reactie op verschillen in waarden van fysische grootheden van het draaggas en van de te detecteren componenten. Hoe groter deze verschillen zijn, hoe gemakkelijker het zal zijn om de onderste detectiegrens te verlagen. Een geschikte keuze van het draaggas is hierbij uiteraard van veel belang.

De in deze dissertatie behandelde waterstofvlamionisatiedetector reageert op het zeer grote verschil in ionenvorming van waterstof en van organische stoffen in een waterstofvlam. De ionenconcentratie in een zuivere waterstofvlam is zeer laag. Door kleine hoeveelheden organische stof in de vlam te brengen neemt deze concentratie belangrijk toe.

Het verschil in ionisatie van waterstof en organisch materiaal is veel groter, dan men op grond van de ionisatiespanningen der verschillende componenten zou kunnen verwachten. De ionisatiespanning van organische stoffen lijkt in de vlam ineens veel lager geworden te zijn. Ter verklaring hiervan wordt in het algemeen de suggestie van Stern geaccepteerd. Volgens Stern worden de ionen niet gevormd door thermische ionisatie, maar door thermische emissie van elektronen door kleine koolstofdeeltjes, die tijdens het verbrandingsproces in de vlam gevormd worden. Bepalend voor de ionenconcentratie is dus de uittreepotentiaal van koolstof en niet de ionisatiepotentiaal van de aanwezige componenten.

De ionenproduktie in de vlam wordt gemeten door tussen twee elektroden in de directe omgeving van de vlam een spanning aan te leggen, waardoor tussen deze elektroden een stroom gaat lopen. Meestal wordt de metalen brander als één elektrode gebruikt en een platina gaasje hier vlak boven als tweede elektrode. De stroom wordt omgezet in een spanning over een hoogohmige weerstand en deze spanning wordt gemeten via een elektrometerversterker.

De grootte van het op deze manier verkregen signaal is evenredig met de hoeveelheid organisch materiaal die per tijdseenheid in de vlam stroomt. Hierdoor is het effect dat het gasvolume van de detector op het oplossend vermogen heeft anders dan voor detectoren die op concentratie reageren. De verdunnende werking die het volume op de concentratie heeft uit zich niet in de hoeveelheid stof, die per tijdseenheid binnenstroomt. Alleen de in het detectorvolume optredende gasdiffusie veroor-

zaakt een achteruitgang van het oplossend vermogen. Het effect van het volume is bij de vlamionisatiedetector echter zeer gering.

Het begrip „gevoeligheid" voor detectoren ligt niet eenduidig vast. Het is een waarde die aangeeft welk signaal de detector geeft voor een bepaalde componentconcentratie in het draaggas. De gevoeligheid geeft dus niet aan welke kleinste hoeveelheid of concentratie van een component nog detecteerbaar is. Hiertoe moet de gevoeligheid van de detector samen met de ruis op het detectorsignaal gegeven worden.

In de blanco waterstofvlam komen reeds ionen voor. Deze stammen van verontreinigingen in de gebruikte gassen en in de lucht en van verontreinigingen die uit de apparatuur komen. Bovendien geeft geheel zuivere waterstof bij verbranding ook al ionen. In deze dissertatie wordt een methode beschreven om deze waterstofionisatie te meten onafhankelijk van de aanwezige verontreiniging. Het blijkt dat waterstof verantwoordelijk is voor een signaal dat equivalent is aan een verontreiniging met 0.7 ppm n-butaan.

De aanwezigheid van ionen in de blanco waterstofvlam brengt een fysische beperking voor de detectiemogelijkheden met zich mede. Daar de hoeveelheid geproduceerde ionen evenredig met de waterstoftoevoer is, geven fluctuaties in deze toevoer aanleiding tot fluctuaties, en dus ruis, in het nulsignaal van de detector. De detectiegrenzen worden dus bepaald door de technische mogelijkheden deze gasstroom te stabiliseren.

Een opstelling wordt beschreven waarbij speciale aandacht wordt besteed aan dit stabilisatieprobleem. Een onderste detectiegrens is bereikt van 0,001 ppm n-butaan. Deze waarde ligt 10^4 keer lager dan die voor de tot nu toe veel gebruikte warmtegeleidbaarheidsdetector.

De lage onderste detectiegrens in combinatie met het geringe volume-effect maakt de vlamionisatiedetector bijzonder geschikt in combinatie met capillaire kolommen. Deze dissertatie besluit dan ook met een analyse-resultaat, verkregen met een dergelijke combinatie, van een monster dat 34 componenten bevat verdeeld over C_6 tot C_8.

Een appendix geeft enkele bijzonderheden over de elektrische schakeling.

LITERATURE REFERENCES.

1. James, A. T. and Martin, A. J. P. Analyst 77 (1952) 915
2. Desty, D. H. Symposium on Vapour Phase Chromatography, pag. XIII
   (Butterworths Scientific Publications, London 1956)
3. Deemter, J. J. van, Zuiderweg, F. J. and Klinkenberg, A. Chem. Eng. Sci. 5 (1956) 271
4. Scott, R. P. W. and Cheshire, J. D. Nature 180 (1957) 702
5. Golay, M. J. E. Anal. Chem. 29 (1957) 828
6. Desty, D. H., Goldup, A. and Whijman, B. H. F. J. Inst. Petr. 45 (1959) 287
7. Martin, A. J. P. Gas Chromatography, edited by V. J. Coates, H. J. Noebels and I. S. Fagerson (Academic Press, New York 1958)
8. McWilliam, G. and Dewar, R. A. in Gas Chromatography, edited by D. H. Desty
   (Butterworths Scientific Publications, London 1958)
9. Thompson, A. E. J. Chromatography 2 (1959) 148
10. Deal, C. H., Otvos, J. W. and Smith, V. N. and Zucco, P. S. Anal. Chem. 28 (1956) 1958
11. Boer, H. Symposium on Vapour Phase Chromatography
    (Butterworths Scientific Publications, London 1956)
12. Lovelock, J. E. J. Chromatography 1 (1958) 35
13. Dimbat, M., Porter, P. E. and Stross, F. H. Anal. Chem. 28 (1956) 290
14. Clark Jones, R. Preprints of the "Fifth meeting and conference of the international commission for optics" Stockholm 24—30 August. 1959.
15: Saha, M. Proc. Roy. Soc. (London) 99A (1921) 135
16. Calcote, H. F. and King, I. R. Fifth Symposium on Combustion
    (Reinhold Publishing Corporation, New York 1955)
17. Shuler, K. E. and Weber, J. J. Chem. Phys. 22 (1954) 491
18. Lewis, B. and von Elbe, G. Combustion, Flames and Explosions, p. 206
    (Acad. Press. Inc. 1951)
19. Arshinov, A. A. and Musin, A. K. Doklady Akad. Nauk. SSSR (1958) 461
20. Kinbare, T. and Nakamura, J. Fifth Symposium on Combustion
    (Reinhold Publishing Corporation, New York 1955)
21. Knewstubb, P. F. and Sugden, T. M. Nature 181 (1958) 474
22. Hooimeyer, J., Kwantes, A. and van de Craats, F. in Gas Chromatography, edited by D. H. Desty
    (Butterworths Scientific Publications, London 1958)
23. Golay, M. J. E. in Gas Chromatography, edited bij D. H. Desty.
    (Butterworths Scientific Publications, London 1958)

STELLINGEN.

L. Ongkiehong.

Promotiedatum: 19 januari 1960.

I

Het effectieve volume van de door Lovelock ontwikkelde argon detector voor capillaire kolommen is vele malen groter dan door hem wordt verondersteld.

Nature 182 (1958) 1663

II

Het vervaardigen van thermokoppels voor het meten van de temperatuur aan een metaaloppervlak door het chemisch neerslaan van nikkel over de in dit oppervlak liggende open uiteinden der thermokoppeldraden, leidt tot een solidere constructie dan die verkregen door het opdampen van metalen.

Bendersky, D. Mech. Eng. 75 (1953) 117

III

Ten onrechte wordt in de vakliteratuur de schakeling voor het amplitude-moduleren van klasse-C versterkers of oscillatoren d.m.v. een seriebuis in de anodeleiding genegeerd.

Handbook of wireless telegraphy
volume II section N, His Majesty's
stationery office, London 1939

IV

Bij continu afstembare ontvangers voor de ontvangst van enkelzijbandtelefonie op de metergolven verdient het aanbeveling de eerste frequentietransformatie met een frequentieverlaging van minder dan circa 30 MHz uit te voeren.

V

Bij gerichte antennes voor communicatiedoeleinden op de metergolven tussen twee stations op aarde, verdient het aanbeveling om de versterking van de antennes zoveel mogelijk door bundeling in het horizontale vlak tot stand te brengen.

VI

De elektronenbuis zal bij verdere invoering van elektronica in meet- en regelapparatuur in de industrie geen rol van betekenis spelen, alhoewel hiervoor op de markt geen duidelijke indicaties zijn te vinden.

VII

De door Neale bij de afleiding van de formule voor de elektrokinetische stroom gebruikte theorie is onjuist.

Trans. Faraday Soc. 42 (1946) 473

VIII

De door Rutgers veronderstelde consequenties van de oppervlaktegeleiding zijn onjuist.

Trans. Faraday Soc. 36 (1940) 69

IX

In de muziekpedagogie dient de jeugd op de juiste leeftijd meer gevoel voor harmonie bijgebracht te worden.

X

Onze instelling tegenover eventueel te ontmoeten bevattelijke bewoners van andere hemellichamen moet uitsluitend commercieel zijn.