UNIVERSITY OF SALFORD

DEPARTMENT OF AERONAUTICAL AND MECHANICAL ENGINEERING

"THE DEVELOPMENT OF A STRUCTURED APPROACH TO THE DESIGN FOR ECONOMIC MANUFACTURE OF ENGINEERING PRODUCTS"

BY

ABDULAZIZ AHMED RAMADAN

B.Sc.ENG. (AIN SHAMS)-CAIRO,D.A.S.(SALFORD)

A THESIS SUBMITTED TO THE UNIVERSITY OF SALFORD IN PARTIAL FULLFILLMENT OF THE REQUIREMENTS FOR THE DEGREE OF DOCTOR OF PHILOSOPHY IN MECHANICAL ENGINEERING

BEST COPY
AVAILABLE
Variable print quality

Text cut off in original

TO MY FATHER AND MY MOTHER

CONTENTS

		PAGE
	ACKNOWLEDGEMENT	(I)
	SUMMARY	(II)
CHAPTER(1) :	GENERAL BACK GROUND AND SUMMARY OF CURRENT RESEARCH WORK	
1.1	GENERAL OVERVIEW TO THE SUBJECT	1
1.2	BACKGROUND TO CURRENT RESEARCH WORK	2
1.2.1	GLADMAN & MERCHANT INITIATIVE ON DESIGN FOR ECONOMIC MANUFACTURE	3
1.2.2	CHISLOM & FOGG PROPOSALS	4
1.3	IMMEDIATE BACK GROUND AND INITIAL PROPOSALS OF CURRENT RESEARCH WORK	7
1.4	THE COURSE OF THE INVESTIGATION AND THE DEVELOPMENT OF THE RESEARCH WORK.	9
1.4.1	THE PRELIMINARY INVESTIGATION	9
1.4.2	CASE STUDIES AND MODEL	12
1.5	THE CONTENTS AND THE LAYOUT OF THE THESIS	14
CHAPTER(2):	DEFINITION OF THE PRODUCT , THE MANUFACTURING RESOURCES AND THE ENGINEERING ORGANISATION	
2.1	DEFINITION OF THE ENGINEERING PRODUCT AND ITS CHARACTERISTICS	15
2.1.1	GENERAL DEFINITION	15
2.1.2	MARKET REQUIREMENTS AND PRODUCT SPECIFICATIONS.	15
2.1.3	THE PRODUCT REQUIREMENTS AND THE CRETERIA FOR SUCCESS	16
2.1.4	THE PRODUCT LIFE CYCLE AND LIFE SPAN	20
2.1.5	DEFINITION OF THE PRODUCT DESIGN	21
2.2	DEFINITION OF MANUFACTURING RESOURCES AND THEIR CHARACTERISTICS	24
2.2.1	GENERAL DEFINITION	24

2.2.2 CHARACTERISTICS OF MANUFACTURING STRATEGIES 25
2.2.3 FORMS OF MANUFACTURING RESOURCES AND STRATEGIES 28
2.3 THE ENGINEERING ORGANISATION ITS OBJECTIVES AND TASKS 29
2.3.1 OBJECTIVES OF THE ENGINEERING ORGANISATION 29
2.3.2 THE TASK OF THE ENGINEERING ORGANISATION 29

CHAPTER(3): VALUE ENGINEERING LITERATURE SURVEY

3.1 INTRODUCTION 30
3.2 HISTORICAL BACK GROUND 31
3.2.1 THE INTRODUCTION OF VALUE ANALYSIS BY GENERAL ELECTRIC CO. 31
3.2.2 THE EVOLUTION OF VALUE ENGINEERING BY THE BUREAU OF SHIPS, U.S. NAVY 33
3.2.3 THE DEVELOPMENT OF VALUE ANALYSIS AND VALUE ENGINEERING 34
3.2.4 THE INTRODUCTION OF VALUE ENGINEERING TO THE BRITISH INDUSTRY 34
3.3 THE CONCEPT OF VALUE AND THE PHILOSOPHY OF THE VALUE APPROACH 35
3.3.1 THE PHILOSOPHY OF "VALUE ANALYSIS"AS ORGINATED BY GENERAL ELECTRIC 35
3.3.2 THE PHILOSOPHY OF VALUE ENGINEERING AS DEVISED BY THE BUREAU OF SHIPS 36
3.3.3 MODERN PHILOSOPHY OF VALUE ENGINEERING 37
3.4 THE VALUE ENGINEERING SYSTEMATIC FUNCTIONAL APPROACH
3.4.1 THE VALUE ENGINEERING KEY TECHNIQUES 44
3.4.2 THE VALUE ENGINEERING BASIC STEPS 44
3.4.3 THE VALUE ENGINEERING JOB PLAN 60
3.5 THE VALUE ENGINEERING ADVANCE FUNCTION TECHNIQUES. 60
3.5.1 FUNCTION ANALYSIS 71
3.5.2 FUNCTION COST ANALYSIS 80
3.5.3 FUNCTION EVALUATION 84

3.6 ADDITIONAL TOOLS FOR VALUE ENGINEERING 88
3.6.1 VALUE CONTROL DESIGN GUIDE. 88
3.6.2 DECISION MATRIX 89
3.6.3 VALUE ENGINEERING CHECK LISTS 93
3.6.4 GENERAL INFORMATIJN FOR VALUE ENGINEERS & DESIGNERS 93
3.7 PRELIMINARY ASSESMENT OF THE VALUE ENGINEERING TECHNIQUE AS A RESULT OF THE SURVEY. 94

CHAPTER(4): INDUSTRIAL SURVEY

4.1 INTRODUCTION 96
4.2 RESULTS OF THE INVESTIGATION 98
4.2.1 RESULTS OF AN INVESTIGAION CONDUCTED AT PLESSEY TELECOM. 98
4.2.2 RESULTS OF INVESTIGATION CONDUCTED AT VICKERS 101
4.2.3 RESULTS OF AN INVESTIGATION CONDUCTED AT HOOVER 104
4.2.4 RESULTS OF AN INVESTIGATION CONDUCTED AT JOSEPH LUCAS 114
4.2.5 RESULTS OF AN INVESTIGATION CONDUCTED AT TELECOM. 119
4.2.6 RESULTS OF AN INVESTIGATION CONDUCTED AT PYE UNICAM 122
4.2.7 RESULTS OF AN IVESTIGATION CONDUCTED AT FOR MOTORS 125
4.2.8 RESULTS OF AN INVESTIGATION CONDUCTED AT ROLLS ROYCE (1971)CO. AERO ENGINE DEVISION. 128
4.2.9 RESULTS OF AN INVESTIGATION CONDUCTED AT BRITISH AIRCRAFT CORPORATION WEYBRIDGE DIVISION 140
4.2.10 RESULTS OF AN INVESTIGATION CONDUCTED AT BRITISH AIRCRAFT CORPORATION MILITARY AIRCRAFT DIVISION. 146
4.3 ANALYSIS OF THE RESULTS AND 152

DISCUSSIONS.

CHAPTER(5): ANALYSIS OF RESULTS OF INITIAL INVESTIGATION AND PRELIMINARY CONCLUSION 160

CHAPTER(6): CASE STUDY(1):
"REDESIGN OF AN EXISTING PRODUCT FOR ECONOMIC MANUFACTURE"
"DESIGN OF A NEW RANGE OF OVERHUNG MOTORS FOR COMPRESSOR APPLICATIONS FOR REDUCED MANUFACTURING COSTS

6.1 INTRODUCTION 166
6.2 THE IMMEDIATE BACKGROUND TO THE PRESENT CASE STUDY 166
6.3 STUDY OF THE SPECIFIC PRODUCT REQUIREMENTS AND IDENTIFICATIONS OF THE EXISTING PRODUCT RANGE. 168
6.3.1 MECHANICAL CONFIGURATION 168
6.3.2 PRODUCT REQUIREMENTS 168
6.3.3 PRODUCT RANGE 168
6.3.4 DESIGN MODIFICATIONS 169
6.3.5 REASONS FOR DISCONTINUING THE RANGE 169
6.4 INVESTIGATION INTO CUSTOMER REQUIREMENTS, POTENTIAL COMPETITION AND MARKET PRICE. 171
6.5 INVESTIGATION INTO PRODUCT MANUFACTURING COSTS AND PRESENT METHODS OF MANUFACTURE 173
6.5.1 COSTING OF THE MOTOR 173
6.5.2 IDENTIFICATION OF METHOD OF MANUFACTURE AND INVESTIGATING PROBLEMS ASSOCIATED WITH THE PRODUCTION AND TESTING OF THE MOTOR. 173
6.5.3 COST ANALYSIS OF MOTOR 176
6.6 ANALYSIS OF THE RESULTS OF THE STUDY AND RECOMMENDATIONS 179
6.6.1 THE OVERALL STRATESY AND OBJECTIVES 179
6.6.2 ANALYSIS OF THE PRESENT PROBLEM AND IDENTIFICATION OF ITS CAUSES 179

6.6.3 IDENTIFYING OF THE MAJOR AREAS OF IMRPOVEMENTS 180
6.6.4 RECOMMENDATIONS FOR AN OVERALL DESIGN APPROACH. 184
6.7 AN APPROACH FOR A REDESIGN OF A TYPICAL MOTOR FOR ECONOMIC MANUFACTURE. 187
6.7.1 ESTABLISHING OF CUSTOMER REQUIREMENTS AND MARKET PRICE 187
6.7.2 ESTABLISHING MOTOR TARGET PRICE AND ASSEMBLY TARGET COST 188
6.8 MAIN ACHIEVED MODIFICATIONS AS A RESULT OF THE STUDY AND PROPOSED DESIGN APPROACH 191

CHAPTER(7): CASE STUDY(2)
"AN OPTIMUM DESIGN OF A VERTICAL LONG SHAFT CENTRIFUGAL PUMP FOR MINIMUM MANUFACTURING COSTS"

7.1 INTRODUCTION 193
7.2 STUDY OF CURRENT PROCEDURE OF ENGINEERING AND DESIGN OF PUMPS 194
7.3 STUDY AND ANALYSIS OF FACTORS INFLUENCING THE COST OF MANUFACTURING THE PUMP 196
7.4 STUDY AND ANALYSIS OF SUBASSEMBLIES DESIGNG , MATERIALS OF CONSTRUCTION AND METHOD OF MANUFACTURE 197
7.4.1 DESGN PARAMETERS OF RISING MAIN PIPES AND SHAFTS ASSEMBLY 197
7.4.2 ANALYSIS OF MATERIALS AND METHODS OF MANUFACTURE OF RISING MAIN PIPES AND LINE SHAFT. 198
7.4.3 ANALYSIS OF MATERIALS AND METHODS OF MANUFACTURE FOR OTHER PARTS OF THE PUMP 200
7.5 RECOMMENDATION FOR AN IMMEDIATE IMPROVED DESIGN PROCEDURE 201

7.5.1 OPTIMISING RISING MAINAND LINE SHAFT CONCEPT ARRANGEMENT 201

7.5.2 OPTIMISING DESIGN ARRANGEMENT FOR THE OTHER SUBASSEMBLIES OF THE PUMP 204

7.5.3 PROPOSALS OF ALTERNATIVE SOLUTIONS 205

7.5.4 DESIGN FINALISATION OF PUMP SUB-ASSEMBLIES 205

7.6 RECOMMENDED FUTURE IMPROVEMENTS IN DESIGN AND MANUFACTURING AREAS 206

CHPATER(8): A STRUCTURED APPROACH TO DESIGN FOR ECONOMIC MANUFACTURE

8.1 INTRODUCTION 209

8.2 THE NEED FOR A CONTINUOUS DESIGN MANUFACTURE INTERACTION AS A MEANS TO IMPROVE PRODUCT ECONOMY 210

8.2.1 THE INFLUENCE OF PRODUCT DESIGN ON PRODUCT MANUFACTURING COSTS 210

8.2.2 THE NEED FOR A MORE RATIONALISED DESIGN APPROACH TO COMPONENT DESIGN 216

8.2.3 THE EFFECT OF IMPROVING THE MANUFACTURING STRATEGIES ON COST AND THE NEED FOR A RATIONALISED MANUFACTURING ACTION 221

8.2.4 THE NEED FOR A CONTINUOUS DESIGN MANUFACTURE INTERACTION 222

8.2.5 THE NEED FOR AN IMPROVED . MANUFACTURE DESIGN INTERFACE 222

8.3 THE SIGNIFICANCE OF EMPLOYING A RATIONAL PROCEDURE FOR PRODUCT COST CONTROL AS A MEANS TO IMPROVE COMPANY PROFITABILITY 226

8.3.1 IDENTIFICATION OF STAGES OF PRODUCT COST CONTROL 226

8.3.2 COST CONTROL AT THE PRODUCT DEFINITION APPROACH STAGE 228

8.3.3 PRODUCT COST CONTROL AT DESIGN STAGE - DESIGN COST CONTROL 231

8.4 A TOTAL APPROACH TO DESIGN FOR ECONOMIC MANUFACTURE. 234

ACKNOWLEDGEMENTS

I am very gratefull to Mr. B. FOGG the Project Supervisor for his continuous guidance, support and encouragement given during the entire course of this work,and to professor A.W.D. CHISHOLM for his interest at the early stages of the work .

I am also gratefull to all people in Industry who have cooperated to supply information during the industrial survey an in particular to personnell at Rolls -Derby and British Aircaraft-Webridge, for their significant contribution to the contents of this work.

Finally I am gratefull to my employers MATHER & PLATT LTD.for supporting me during the final preparation of this thesis.

SUMMARY

The present work has been concerned with establishing a rational approach to product design for economic manufacture. This has invloved the development of an organised design approach together with proposals for a structure for an ideal organisational system to support a design for economic manufacture activity.

Surveys of relevant literature and industry have been conducted to review practices and techniques which are currently available to the industry to aid the processed of design for economic manufacture. As a result of the survey it was possible to define analyse the major areas of activities in relation to product design and manufacture to identify where maximum attention should be given by the management and designers to effect economy of product manufacture.

It was concluded that although the mangement in several companies have adopted certain policies towards designing for economic manufacture, a more structure and organised approach is required to meet the growing need to apply design of economic manufacture as a means of reducing manufacturing costs.

As a result of the analysis, it has been possible to identify the actions which must be taken at the different stages of product design and devleopment to ensure economy of manufacture. These findings are supported by two design case studies which individually demostrate the type of cost savings which can be achieved by giving consideration to the product concept at an early stage of design, in addition to optimising the component desine for manfacture. The above case studies highlighted the fundamental factors which influence the product manufacuring costs.

The above work has allowed proposals to be made for an overall integrated organisational system which should aid the process of design for economic manufacture in most engineering companies.

CHAPTER (1)

GENERAL BACK GROUND AND SUMMARY OF CURRENT RESEARCH WORK.

1.1 GENERAL OVERVIEW TO THE SUBJECT

In the market orientated engineering industry, the commercial success of the product is becoming increasingly influenced by production cost which inturn is dependent on the company organisational effieciency and design effectiveness.

In many branches of industry, especially those in the highly competitive market, the product selling price is to a large extent influenced by the market competition and not directly dictated by the manufacturer.The overall company profitablility is, therefore, influenced by the production costs of the end product which, would even determine whether the product would have a place on the market.

In other branches of industry , those of the highly specialised activities such as the aeroengine and aerospace industries, although " performance " and " operating costs" is considered vital requirements for the acceptability of the product to the end user, it is equally important that the initial costs of obtaining these requirements is kept within acceptable limit. Ensuring minimum cost of production is , therefore , becoming a prime objective that chalanging the enineering organisation management.

The responsibility for the production costs, although is mostly placed on the production engineers and manufacturing specialists, who are responsible for developing the manufacturing process, is equally shared by the product designers who make the vital decisions concerning the particular product specification and design concepts which to a large extent influence these costs. The product designer, beside his functional design responsibilities, is therefore left with the resposibility of the cost together with other constraints such as time factor which play an important role in the product success.

The market competition however, is increasing, creating even more presure on the cost and time. The designer's tasks is, therefore ,becoming more an more complex. The assistance of the other organisation functions to the designer to meet his task is therefore essential and has to be given prime attention by the organisation management if it is to achieve its main objectives.

1.2 GENERAL BACKGROUND TO CURRENT RESEARCH WORK

In this section it is intended to review the background against which the present work was conducted and the details of the problem under consideration.

1.2.1 GLADMAN & MERCHANT INITIATIVE ON DESIGN FOR ECONOMIC PRODUCTION

In his presidential address to the C.I.R.P.* General Assembly in 1968, Gladman urged its members to take an active part in relation to the subject of 'Design for Production ' and to establish a collaborative research programme in this field.

He made his point by first referring to the craftsman operative, who often has to correct the designer's omission regarding design for production on the shop floor. He has seen that the problem lies in the future, as the manufacturing industry is moving towards the automatic era when the majority of production will be carried out under automatic control . The craftsman operative will disappear from the manufacturing scene, though designs consequently would have to be"right -first-time"for prodction .

In his speech, Gladman referred to the fact that the activities of C.I.R.P. had concentrated mostly on production techniques, with the main interest being to increase productivity through technical progress in the Utilisation of Production resources. He has seen that the productivity consciousness, however,should commence at the product development and design stage and continue through production stages.

He accordingly recommended that the activities of C.I.R.P. should be extended so as to take a role in assisting the designer in developing he best production design .

Within the same review Gladman went on explainning how C.I.R.P can contribute in this matter. He referred to the fact that in order to create good design , which is economical to produce, inspiration and intuition require not only catalysts to create ideas but also correct production information since the skelton of the final design idea must be clothed physically in materals which can be manufactured by known production processes. Based on these facts, he tried to define in more clear terms the role of C.I.R.P. by defining the stage of design an the area of activity in which the contribution can be made 91.)

In relation to the design process stages, Gladman saw that design for production has its place in the third stage of design, i.e. ' Design analysis an challenge' after specification and creative stages where the main design specifications can be challenged to permit economical production. He referred to this stage as being of the most interest to C.I.R.P. More precisely, he tried to allocate the area where the contribution can be made. He referred to the principles of ' Group Technology' and has seen that the designer, using the Group Technology principles , should be able to identify more readily on the drawing board the component with the particular type and size of the machine tool on which it will most appropriately be produced, and moreover should be able to modify the shape to a practicable solution . The designer should also be ble to obtain a quick estimate of the cost and compare his cost with those of alternative methods associated with other solutions.

It is clear from Gladman's recommendation that the main contributin of C.I.R.P, would be <u>to investigate ways and means of providing designers with useful production information and in particular the facts about the quality and the cost in production processes</u> . The required data must be properly analysed and suitably presented . He suggested that a study should be made to relate cost to the manfacturing process characteristics in terms of quality, surface finish and so on (1).

Within the same C.I.R.P. conference M.E. Merchant, also contributed to the discussion in design for production along the same lines that had been initiated By Gladman(2).

In a later review in 1969 (3) , Gladman described the expected role of the digital computer in relation to the design process and in

particular to ' Design for production ' in the future . He suggested that investigations should be made into two main points as follows:-

a) The use of the computer in solving geometric problems on component and tool design.

b) The use of the computer in providing the designer with the costs of alternative production processes.

1.2.2 CHISHOLM & FOGG PROPOSALS

In response to Gladman's initiative , Chisholm & Fogg produced proposals aimed at developing the right academic descipline in this field. These proposals were contained in a tentative research programme (4) and submitted to C.I.R.P at the general assembly of 1970.

It was claimed in the programme that in a typical engineering organisation, although every engineering designer attempts to consider production processes and available manufacturing facilities in order to economise within his design work , the communication between the work shop and the design office, nevertheless, is often weak leading to the situation where by the knowledge acquired by the designe. concerning the capabilities of production processes and information about manufacturing costs is usually too inadequate to from a basis for decision making which in turn reflects on the overall product economiy.

In the same report , reference has been made to a specialist engineering function known to be the ' Design for Production ' function which has been developed especially in large quantity production. This function was described as if armed with detailed information on sales forecasts, manufacturing costs and facilities and a deep knowledge of the technoligies of the wide range of materials an production methods available, this specialist function is cocerned with engineering work devoted to the specific objective of enabling the product to be produced at the lowest possible cost whilst maintaining its essential functional performance characteristics.

It was claimed that, due to the pressure on cost, and due to the fact that manufaturing technology has expanded greatly , this specialised engineering function is increasingly a recognisable specialist engineering activity , part of the broader activity of manufacturing

engineering.

Based on these facts, Chisholm & Fogg have seen that <u>there is a need to establish a coherent technology to serve as a basis for the practice of ' Designer for Production ' as an engineering activity .</u>

Consequently, they have suggested new outlines of research programme that would help to develope such a technology which has been titled ' Design for Economic Manfacture'

The outlines of the ' Design fo Economic Manufacture' technology were suggested to be as follows:-

a) It was first proposed to develop rational and logical procedures for design for economic manufacture. This was suggested to take the form of a frame work for decision making which might consist of numerous algorithms or logic flow diagrams each devoted to a particular decision making phase. The overall purpose of this approach would be to identify the best method of designing and manufacturing a component or assembly to fulfil a given function . The research programme in this area was suggested to be concerning with identifying these phases , the parameter concerned with each phase and the type of information required to make the decision .

b) Secondly, it was proposed to establish an encyclopaedia for process capability which would aid the work of designing for economic manufacture. The research in this field was suggested to be devoted to two main areas; first ,to identify the parameters which would be used for assessing the capabilities of each process in terms of component shape, accuracy and surface finish , and second, to ivestigate the way with which to calssify and co-ordinate the information and relaionships which would be required to compile sections of this encyclopaedia.

c) It was claimed that costing information is considered vital and should form a central part of the encyclopaedia.Consequently it was proposed that the research programme should be extended to incorporate investigation into costing methods actually used in industry and assess their relaibility. Secondly , to try to develop cost relationship which would be applicable to be employed in the encyclopaedia.

The above proposals were submitted to the 'Optimisation ' Technical Committee of C.I.R.P. for further discussion, modification and development. Initially , the proposals were accepted subject to

further investigation . This was followed by the formation of the ' Design for Economic a Manufacutre' sub-group as part of the 'O' Group (Optimisation Group) of C.I.R.P.

The main objective of this D.E.M. sub-group was to develop the technology of ' Design for Economic Manufacture ' further, along the lines previously established by Chisholm & Fogg.

1.3 IMMEDIATE BACKGROUND AND INITIAL PROPOSALS OF CURRENT RESEARCH WORK

The formation of the D.E.M. sub-group was aimed at allowing the D.E.M. technology to be developed further. Several academic workε, in related areas, have been in progress in different laboratories, in Salford and other academic institutions on the continent .The concept of' design for economic manufacture' however , has since been under continuous useful challenge and helpful criticism from the members of the sub-group.

Professor Mathias, in a D.E.M. sub-group meeting , has commented on the relataionship between the product and the Manufacturing System(s) . He pointed out that in mass production the manufacturing system was made to suit the product, while in batch production the product ought to be designed to suit the manufacturing system. He has seem therefore that 'Design for Economic Manufacture' has a greater and more useful role in batch production .

In a prior meeting, however, the later Proferssor Opitz was driven to comment on the subject as a whole. He saw that the ' Design for Economic Manufacture ' concept as outlined by Chisholm & fogg , is a repetition of the existing practice of value engineering which has been in application for a considerable time.In support of his comments, Opitz stressed that before any further development of D.E.M. Technology takes place, a study should be made of the practices of value analysis and value engineering and their application in relation to product design.

Following the above views, taking into consideration the fact that the progress in the research activities within C.IR.P. is mainly based on exchanging the views and opinions of its active members, it was found necessary to consider these views further as a means to aid the progress in this field.

On this basis, it was decided that the current research work should be aimed at ivestigating the validity of the above mentioned points with a view to establishig a basis for future work of D.E.M. as a result of this investigation.

It was therefore decided that an ivestigation should be made in two areas; firstly, establishing the relationship between the concepts of ' Design for Economic Manufacture' and ' Value Engineering' and secondly, establishing the possibility of relating the product design

to an existing manfacturing system as a means to economising in product manufacturing.

In relation to the second point , it was suggested that an ivestigation should be made to establish whether the engineering designer within his design work should take into consideration the exstig manufacturing system as a means to produce an economic product design.

In support of the above investigation, however, it was recommended that as a starting point a full study should be made into the current well-established practice of value engineering and value anlysis in the manfucturing industry with a particular emphasis to the application of those techniques in relation to product design.

The objective of this study was to establish two basic criteria; firstly, whether the proposed design for economic manufacture activity as outlined by Chisholm & Fogg can be related to the existing value engineering activity, and secondly, to establish whether the rules emerged in value engineerig techniques and practices can form a basis for design for economic manufacture.

In relation to the latter criterion, it was intended to find out whether value engineers within their approach to product design do take into consideration the existing manufacturing facilites in terms of available manufacturing processes, manufacturing systems and also whether the information data bank available to value engineers can be suitable for use by the designers of full application for design for economic manufacture.

To summarise, the intended points of research were initially as follows:-

a) Establish the relationship between the proposed ' Design for Economic Manufacture ' concept and the existing practice of value engineering.

b) Establish the posibility of relating the product design to an existing manufacturing system.

1.4 THE COURSE OF THE INVESTIGATION AND THE DEVELOPMENT OF THE RESEARCH WORK

1.4.1 THE PRELIMINARY INVESTIGATION

Following the determination of the initial proposals for the current research work it was thought first to define the proposed "Design for economic manfacture" concept with the objective to asses its relationship to existing practice of value analysis and value engineering.

Following the definition of the D.E.M. concept , an intensive survey was carried out to investigate the pre-established points as outlined in 1.3 above. The survey consisted of a literature survey and industrial survey. The literature survey inturn covered topics related to the existing value analysis and value engineering techniques. The industrial survey was decided as a result of the literature survey and it covered several engineering companies which represent different types of industries.

PRELIMINARY DEFINITION OF D.E.M. CONCEPT

Based on Gladman and Merchant initiative Chisholm & Fogg proposals and subsequent academic work,(1-9)the following hypothetical definition for D.E.M. was initially assumed:-

"Design for economic manufacture is the rational procedure which should be adopted by the designers at an early stage of the design in order to optimise their initial functional design so that it can be economically manufactured at a specific existing production system. To support the designer in his approach, pertinant data concerning universal processes capability, material utilisation, costing , as well as sufficient information about the existing production facilities and their organisation should be avaliable, formalised in a suitable way and form a basis for D.E.M. technology".This definition was assumed only for the purpose of the present investigation.

THE VALUE ANALYSIS AND VALUE ENGINEERING LITERATURE SURVEY

Taking into considerations the ultimate objectives of the D.E.M. concpet as defined above, survey was made to cover topics directly related to the techniques of value anlysis and value engineering.

Two objectives were aimed at by this survey; first , to clearly define the concept of value engineering in terms of overall objectives in order to assess its relationship , if any , with the new proposed D.E.M. concept.
Secondly , to find out whether there are rules that have been established as part of the practice of value analysis and value ængineering that can be used for ' Design for Economic Manufacture ' purposes , i.e. to aid rationalising the product design for manufacture.
Initiallly, the survey covered avialble handbooks in the subject as well as relevant publications in current journals. On the basis of this initial study it appeared that value engineering, by definition, is a broader concept than that initially envisaged for the D.E.M. concept. Furthermore, the value engineering aproach and rules, again by definition, although serving a certain purpose, appeared to be too generalised to be used for the specific purpose of ' Design for Economic Manufacutre'.
At this stage of the survey, bearing in mind the specific objectives of this particular study, it was decided that an investigaion should be made to find out the potential applications of value engineering general approach in relation to product design in typical industrial environments.
At a later stage, the value engineering literature survey was widened to cover future trends of the concept and on the other hand to cover articles on the subject back to 1948 to find out the original philosopbhy behind the concept an whether it was introduced to fulfill a particular need. This part of the survey eventually contributed to the overal conclusion.

THE INDUSTRIAL SURVEY

On the basis of the initial outcomes of the literature survey, it was decided that an industrial survey should be carried out with two basic objectives in mind; first to challenge the pre-established D.E.M. hypothesis, i.e. to assess whether the industry has realised the need for a new concept and if so how such a concpet can be adapted suit the specific problems of industry. Second, to study in some depth the application of value engineering general approach in relation to product design and product manufacture .

For the purpose of this survey, a questionnaire was constructed which was thought to be adequate for the purpose of this investigation. The greater part of the questionnaire was developed to challenge the type of activities related to optimising the component design for manufacture with particular emphasis on the type of information required to aid the process of decision making at this particular stage of design.

The investigation started in the aerospace idustry where value engineering was believed to have an important role in relation to product design and development .It was found however that the technique has a unique application in relation to this area of industry and consequently it was feared that this particular case would not represent a traditional example of the application of value engineering in industry. As a result, it was decided to widen the survey to cover branches of industry where the products under consideration are typically market orientated.

Twelve companies altogether, which represent a wide spectrum of engineering industries, were surveyed. Value engineering as well as other related activities connected with product design were studied. As the survey developed it was evident that the investigation interms of level of discussion and findings became more practical and more meaningful. The D.E.M. hypothesis was constantly under continuous challenge and as a result a more realistic definition of the new D.E.M. concept in terms of objectives, means and approaches was arrived at.

As a result of this industrial survey, although the initial objectives were specific, a much wider view of te overall problem was arrived at. Bearing in mind that the overall obective of the D.E.M. concept is to economise in product manufacture, it was possible to identify those areas in relation to product design where most attention has to be paid to achieve this objective rationlly and with maximum efficieny.

The present role of value engineering activity in relation to those design areas were fully established. Furthermore, it was possible to highlight the areas where progress has to be made, and on this basis the potential scope for '' The Design for Economic Manucature ' concept was outlined. This represented the interim conclusion to the first part of the present investigation .

1.4.2 CASE STUDIES AND APPLICATION

As a result of the prelimiary investigation , i.e. the literature and industrial survey, several conclusions were arrived at in connection with the philosophy of economic product design and associated activities.

At the component design stage, optimising the design for manufacture is essential in order to achieve economy of manufacture, producibility of the design and quality of te produced part. However, achieving an economic product design which would yield a minimum manufacturing cost product would, in addition, necessitate the arrriving at an optimum concept design for the overall product or for the individual sub-assmblies at an earlier stage of the design. This , in turn,can be achieved by carefully considering a combination of factors, i.e. the market requirements, the product specifications, the market selling price, the product requirements,the process capability, etc. Furthrmore, it was thought that the process of arriving at the optimum concept design can and should be rationalised for every specific product individually.

The above outcomes have lead to a change of emphasis in the present investigation . Although it was proposed initially to fully investigate the possibility of relating the product design to the manufacturing system, alternatively it was decided to ivestigate the possibility of ratioalising the process of optimising the product concept design for a given design problem .

For this purpose two design cases were studied , each representing a design problem of a different nature. The objective of these studies was to demonstrate the possibility of applying the rules which had been developed, as a result of the initial investigation to a typical design problem .

Case study one incorporated an investigation into the possibility of re-designing an existing product range of electric motors, for economic manufacture. The existing design of the 'overhung shaftless motors' for compressor drives range has been studied with a view to effect complete re-design of the range to minimise the total manufacturing cost and meet a pre-established market requirements, at a certain market price.

Case study two incorporates the development of an approach to a

concept design optimisation for minimum cost. The design of the ' long shaft vertical centrifugal pump' for offshore application has been studied with a view to achieving, for a given pump length , an optimum combination of pump materials and configurations. Certain rules have been developed to aid rationalising the process of decision making at the various stages of design.

Using the result of the foregoing surveys and case studies an attempt is made to develpe a model for an improved organisational and technical arrangements to assist the engineering organisation achieving its tasks in relation to design for economic manufacture.

1.5 THE CONTENTS AND THE LAYOUT OF THE THESIS

The total contents of the thesis are presented in Nine chapters including this introductory chapter. After this chapter, the thesis can be assumed as two parts. Part One, i.e. Chapter 2,3,4and 5 , incorporates the preliminary investigation and the iterim conclusion . Part Two i.e. Chapters 6,7,8 and 9 , incorporates the case studies the model and overall conclusion.

Chapter (2) contains a general back ground to the overall thesis.

In chapter (3) , the concepts of value analysis and value engineering are challenged against the assumed philosophy of ' Design for Economic Manufacture 'This chapter basically reviews the value engineering and value analysis literature survey.

Chapter (4) contains the results of the industrial survey.

Chapter (5) contains the interim conclusion to the preliminary investigation.

Chapter (6) and (7) contain case studies one and two respectively.

Chapter (8) contains the model

CHAPTER (2)

DEFINITION OF THE PRODUCT, THE MANUFACTURING RESOURCES AND THE ENGINEERING ORGANISATION

2.1 DEFINITION OF THE ENGINEERING PRODUCT AND ITS CHARACTERISTICS (10-13)

2.1.1 GENERAL DEFINITIONS

THE PRODUCT

The product is a means to satisfy a need. This need can be realised by the market as a result of the emerging of a new application or new environment, and which cannot be met by an existing product or any other exisiting means.

THE MARKET

The market is the end user, or users. This can take any of the following forms:

- An individual who seeks this means for use in his every day activity.
- Another product manufacturer who seeks a means to accomplish part of his work, such as motor car manufacturer.
- A company or orgnisation who provide services, e.g. Airliner Company , Water Authorities, etc.

2.1.2 MARKET REQUIREMENTS AND PRODUCT SPECIFICATIONS

(A) MARKET REQUIREMENTS

The need which is realised by the market is in actual fact a combination of several requirements (set of requirements), upon which satisfying depends the success of the product. These requirements can be categorised as Technical Requirements and Economical Requirements.

TECHNICAL REQUIREMENTS

- The Technical Requirements can be defined as the overall objectives or ends that have to be met by the product hardware, for example :-

Reflector for the radio communications:-

- Placed outdoors
- has to withstand ice, wind and rain
- has to withstand temperature of - 20 DEG. C to 50 DEG. C
- has to withstand wind up to 100 mph.

Also , the product running cost, such as power consumption, fuel consumption, etc., can be considered part of the Technical Requirements.

MARKET ECONOMICAL REQUIREMENTS

From the end user point of view the Market Economical Requirements are the product initial costs which the user is prepared to pay in return for providing the means or for satisfying the pre-established end.

(B) PRODUCT SPECIFICATIONS

In order to meet the Market Requirements, the product has to be built within certain physical boundaries . It has to conform to certain standards and yield certain outputs. These factors combined represent the product specifications, to which the product is to be designed and produced.

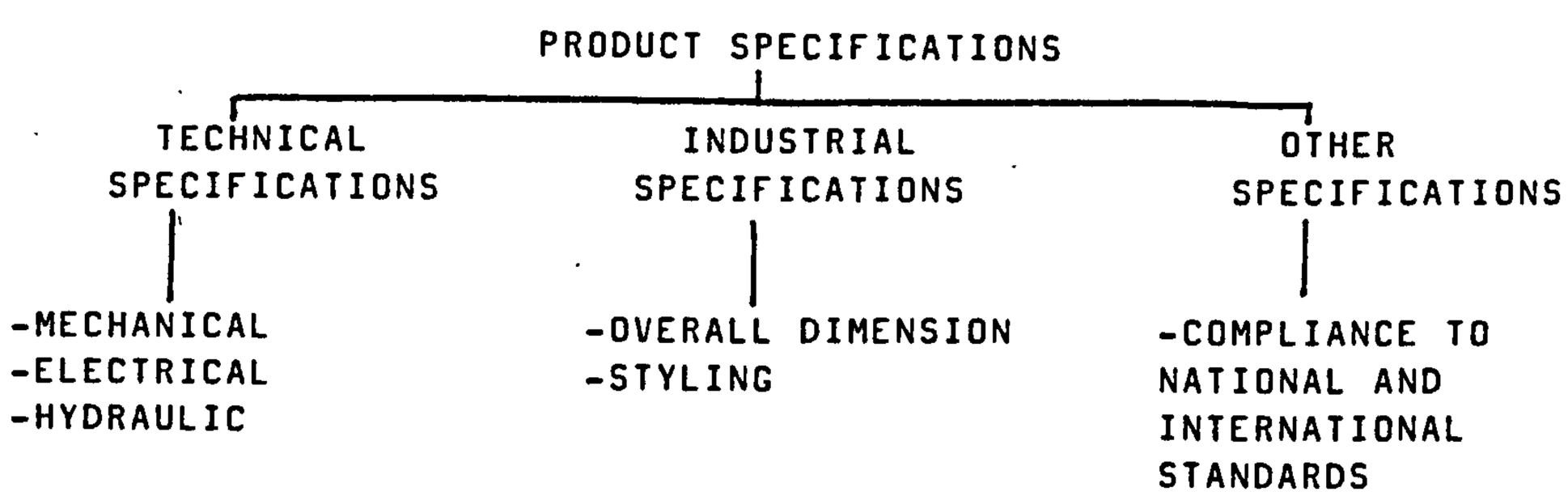

It is important to point out that the Market Requirements and the Product Specifications, although very much related, are by definition, different in nature. In some cases, however, especially in high technology products, the Market requirements may become too specific that they can be directly used as the product Specifications.

2.1.3 THE PRODUCT REQUIREMENTS AND THE CRITERIA FOR SUCCESS

In order to be commercially successful , the end product, within the

frame of its technical specifications, has to possess certain qualities and characteristics which will determine its superiority to other competitive products.

These qualities may be defined as the Product Functional requirements, which inturn can be classified as general Requirements and Specific Requirements.

Also the product has to meet certain criteria in relation to price and delivery. These criteria may be defined as the Product Economical Requirements. (Refer to Fig 2.1)

(A) THE PRODUCT FUNCTIONAL REQUIREMENTS

These can be summarised as follows:-

- General Requirements:
  - Sound Functional Design
  - Appearance
  - Quality and Reliability
  - Man/Machine Considerations
- Specific Requirements

SOUND FUNCTIONAL DESIGN

Theoritcally, it may appear that the commercial success of the product would depend upon its ability to satisfy a pre-established market requirements or technical specifications, irrespective of the employed functional design.

Historically, however, experience has shown that sound functional design attracts the customer and improves the product saleability. The reason is that sound functional design would imply that the product will satisfactorilly operate for a reasonable time in the intended manner, i.e. it implies performance with reliability.

PRODUCT APPEARANCE

ALthough product appearance and styling, in many cases, does not influence its performance, it plays an important role in the product saleability. By the 'right appearance' it is not meant that the product should look attractive or stylish . It is, however, necessary that the product should have an appearance that matches its intended function. for instance , an appearance of sports motor car should give an indication of power and speed , of machine tool should give

indication of durability, and of instrumentation should give indication of precision .

many examples have proved that poor appearance may result in a commercial failure of the product before it has even been in use. The right appearance is therefore considered to be a very important factor of product success and consequently it is part of The Product Requirements.

Niebel & Drapper (10) have discussed in some detail the principles and laws of appearance.

QUALITY AND RELIABILITY

Quality is a relative term . it can be defined as the degree to which a special product conforms to a design or specification(11).

Reliability , on the other hand, means life.

If a product is defined as being of a good quality , it would mean that the characteristics of the product hardware such as surface finish, accuracy, strength and so on , are complying to a specifical known standards . Again , this is considered relative since the desired characteristics would differ from one product to another.

MAN-AMCHINE CONSIDERATIONS

This is to improve in the User/Product interface, i.e. product organomics. It is part of The Product Requirements that it has to be accessible, approachable and easy to handle.

MAINTAINABILITY

The product has to be easy to maintain.

the above Product Requirements can also be defined as the Product criteria for success.

THE PRODUCT SPECIFIC FUNCTIONAL REQUIREMENTS

Beside the general functional requirements which have to be satisfied by the product as a whole, the product sub-assemblies and component parts have to posses certain specific qualities in order to perform its required functional performance in the intended manner and maintain this performance relaibly over the intended service life. Examples of these qualities are strength,hardness, stiffness, corrosion resistance, temperature resistance, resilience, integrity,

lightness, rigidity, toughness, etc.

It is important at this instance to point out that the product specific functional requirements are not another expression used to define the properties of materials, the difference being that the definition of functional requirement can be used to define the behaviour of a complete sub-assembly of a product and not only a single component.

The following examples can be considered to demonstrate the definition of the product specific requirements:-

In the aircraft industry, considering that the overall specification of an aeroplane is to fly at high speeds uder hig pressures (due to high altitudes) and achieve maximum pay load, the specific requirements of the aeroplane sub-assemblies should be "high integrity and stiffness with maximum lightness". Similarly , the specific requirement of an aeroengine's individual parts would be the high strength and high temperature resistance and maximum lightness. the same can be applied to other industries to a lesser degree.

(B) THE PRODUCT ECONOMICAL REQUIREMENTS

Besides the technical achievements that have to be acccomplished by the product hardware, the product has to satisfy certain economical criteria in order to ensure its commercial success. Basically these are the price and delivery times.

PRICE

The product selling price has to fulfil the following criteria.

- In general terms the product selling price has to be reasonable an compatible with the overall function provided and overall specifications. This is to ensure the longest possible life span for the product in the market.
- It has to be within the limits that can be afforded by the end user. This is to ensure the saleability of the product.
- It has to be competitive in relation to other compatible products in the market. this is to ensure a genuine opportunity in the market in the first place.

DELIVERY

Delivery times are equally important, if not more important than the product selling price .

To discuss the criteria for delivery times two types of products

will be considered:-

- Consumer products (mass produced)
- Capital Equipment (Batch produced)

DELIVERY OF CONSUMER PRODUCTS

When the product is first introduced to the market, it will have to be introduced at the right time in relation to other competitive products. Failing to fulfil this criteria may result in the product having a very small share, if any , of the overall market.

The product has to be regularly supplied to the market at a certain constant rate which would be sufficient to meet the market demand rate without interruption. Otherwise, the generation of voids usually results in disturbance in sales.

DELIVERY OF CAPITAL EQUIPMENT

For this type of equipment, delivery contributes to almost fifty percnet of the chances of selling the product.In many cases delivery times would even take priority over prices. Therefore, lead time from the date of receiving an order,to delivery date should be kept to a minimum. With the current rates of inflation longer lead times mean higher production costs.

2.1.4 THE PRODUCT LIFE CYCLE AND LIFE SPAN

PRRODUCT LEAD TIME

From the time of the emerging of a new need to the time of releasing the product to the market,, the product goes through a series of stages within which it is conceived, designed , developed and undergoes through first production runs. The time it takes the product to be ready to be released to the market may be defined as the product lead time(fig 2.2).

PRODUCT LIFE TIME(LIFE SPAN)

As the product goes into the market, it continues to be produced and supplied into the market at a rate sufficient to meet the market demands. When a new need emerges, a new product is conceived, developed and so on. When such a new product goes ito production until the time it is discontinued may be defined as the market life

time for the product (fig 2.2).

PRODUCT CYCLE TIME

The product lead time plus the market life time represent the product life span.

In relation to the above definitions the following comments apply:-

- The lead time and the market life time of a product vary individually from one product to another.
- Since there are new needs emerging all the time, every produc will have a limited life span.
- The new product concepts, in almost all cases, would be a development of an existing one. Only in few cases would a product enjoy an entirely new concept which would represent a complete departure from the existing one.

2.1.5 DEFINITION OF THE PRODUCT DESIGN

The design can be generally defined as:-

' The use of scientific principles, technical information and imagination in the definition of a mechanical structure , machine or system to perform pre-specified function with the maximum economy and efficiency (11).

In connection with the above definiton , there are three concepts of product design. These can be defined as follows:-

(A) Engineering Design

(B) Industrial Design

(C) Production Design

(A) THE ENGINEERING DESIGN

It is the activity concerned with creating the main concept of the design that can meet the pre-established specifications. This in turn can involve any of the following :-

- Mchanical Design
- Electrical Design
- Hydraulic
- Optical
- Thermodyn,etc.

These in turn involve consideration of loads and stresses, and metallurgical and tribological behaviour.

(B) THE INDUSTRIAL DESIGN

It is the design activity which is concerned with the utility of the product. This , inturn , involves the following ;-

- Consideration of product styling , appearance and ethetic factors.
- Consideration of orgonomic factors, man/machine interface.
- Consideration of national, international and company standards.

'ICSID'Definition of Industrial Design

'Industrial Design is a creative activity whose aim is to determine the formal qualities of objects produced by industry. these formal qualities are not only the external features but principally structural and functional relationships which convert a system into a coherent unity both from the point of view of producer and user. Industrial design extends to embrace all the aspects of human environment which are considered by industrial production '.

(C) THE PRODUCTION DESIGN

'Everything desinged is intended to be produced'(2).

The production design activity is concerned with ensuring that the detialed drawings are capable of being produced by the conventional methods of production.

Therefore , the production design activity involves the following:-

- Consideration of materials suitable for manufacture.
- Consideration of the possibility of using existing standard parts.
- Consideration of tolerances.
- Consideration of economics of product manufacture.
- Consideration of producibility of individual parts by existing manfucturing facilities as well as the quality of the produced parts.

it is worth noting that there is a considerable overlap between the three design concepts of A,B and C.

STAGES OF PRODUCT DESIGN

For any type of product there would have to be two main stages of design before the product enteres the production stage; a concept design stage and a detailed design stage.

CONCEPT DESIGN STAGE

The concept design (or the initial design) stage involves the

formation of the main outlines of the product design on the basis of the pre-established product specifications. This in turn may involve the formation of more than one concept design, in order to illustrate the general arrangement of the different sub-assemblies and major parts. Within this stage the engineering design concept and the industrial design concept are considered to a large extent.

DETAILED DESIGN STAGE

The detailed design (or the final design) stage involves the finalising of the individual components parts design for production. Within this stage the production design concept is applied.

2.2 DEFINITION OF MANUFACTURING RESOURCES AND THEIR CHARACTERISTICS(14-17)

2.2.1 GENERAL DEFINITIONS

(A) PRODUCT MANUFACTURING

DEFINITION

'Product Manufacturing is the activity concerned with conveying design drawings and instructions into finished inspected components ready for assembly , through the use of certain resources . This activity involves any combination of metal forming, metal cutting , metal joining and metal finishing.'.

The product manufacturing is part of a larger activity of product production which in addition involves product assembly.

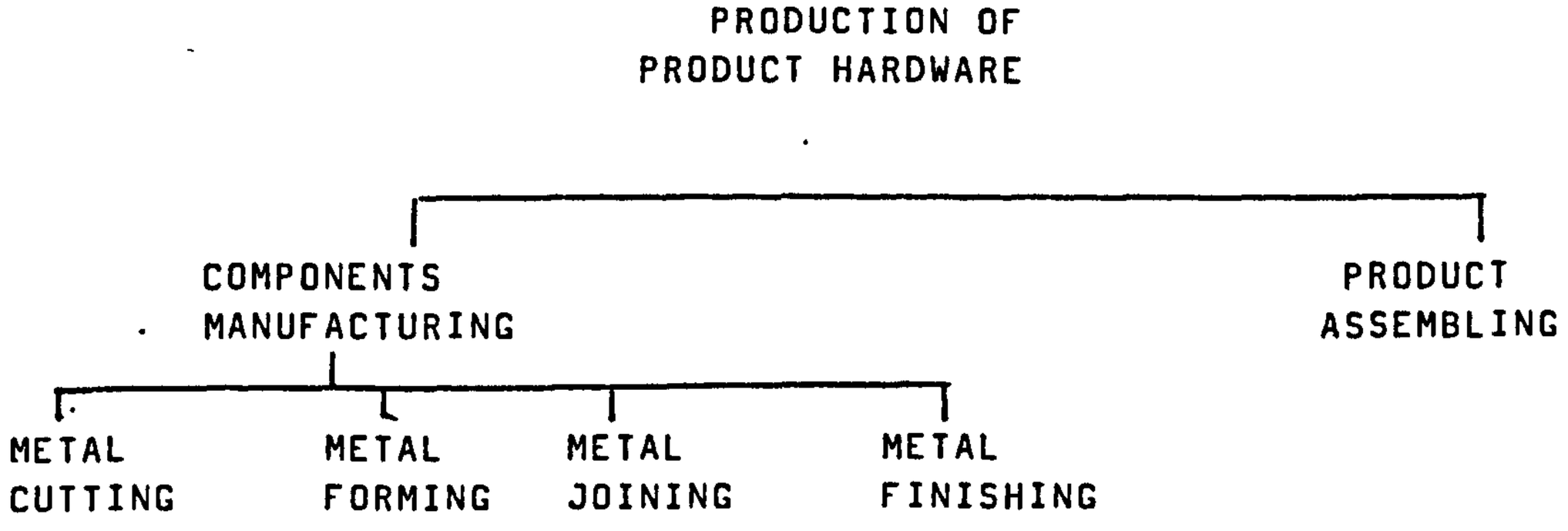

B) MANUFACTURING RESOURCES

DEFINITION

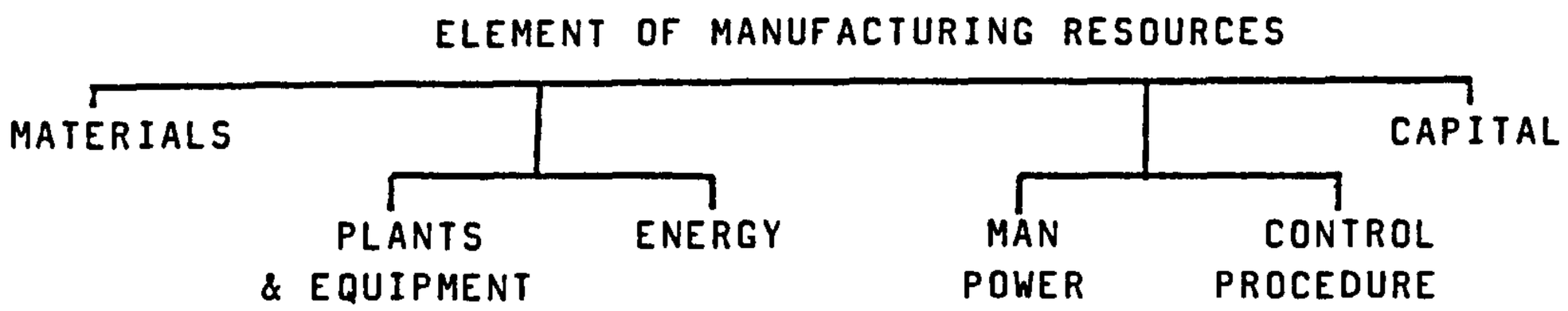

(C) MANUFACTURING STRATEGIES

DEFINITION

'The Manufacturing Strategies may be defined as the manner with which the manfacturing resources are used, arranged or allocated for the sole purpose of conveying design concepts and instructions to a finished inspected components '.

The following are elements of the manufacturing strategies:-

- Tools
- Machines
- Processes
- Production Routes
- Production Systems

2.2.2 CHARACTERISTICS OF MANUFACTURING STRATEGIES

(A) CHARACTERISTICS OF TOOLS

DEFINITION

' The tool is a device or an element designed and used for the express purpose of removing metal from a work piece or forcing metal to be deformed under controlled or stable conditions'.

TYPES OF TOOLS

- Standard
- Tailor Made
- Special
- Universal

CHARACTERISTICS OF TOOLS

Technological and Economical

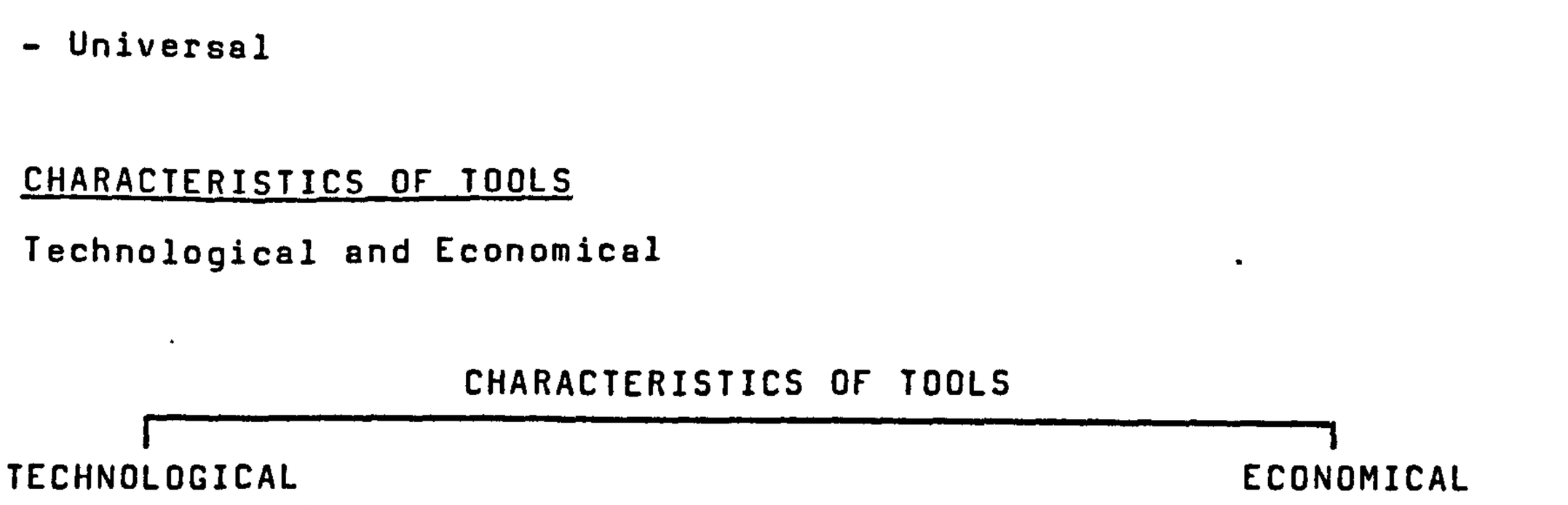

(B) CHARACTERISTICS OF MACHINES

TYPES OF MACHINES

- Standard
- Tailor Made

CHARACTERISTICS OF MACHINES

Technological and Economical

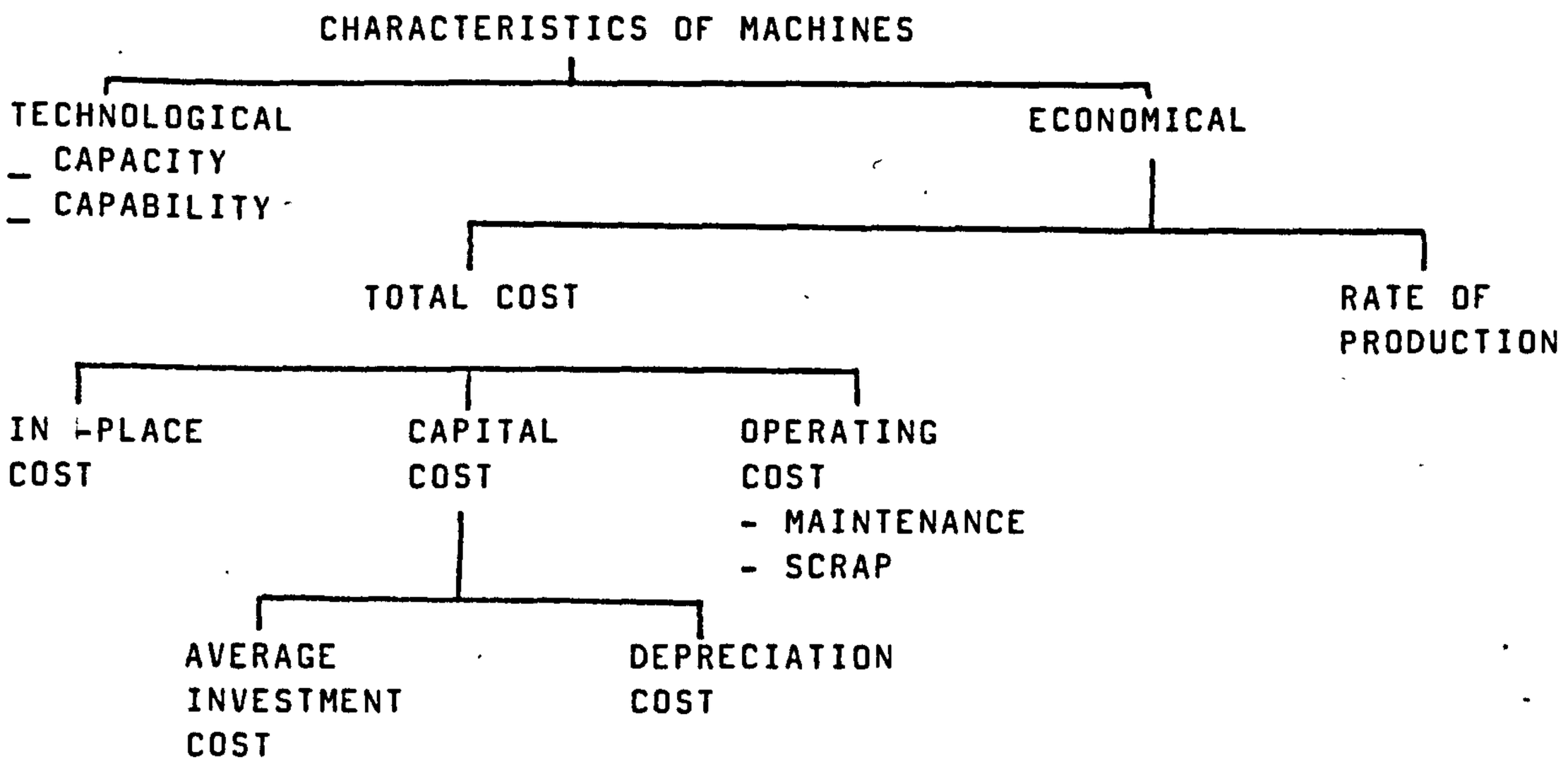

(C) CHARACTERISTICS OF THE PROCESS

TYPES OF MANUFACTURING PROCESSES

Metal forming, metal removal , metal joining and metal finishing

CHARACTERISTICS OF PROCESS

Technological and Economical

For details refers to Chapter (8).

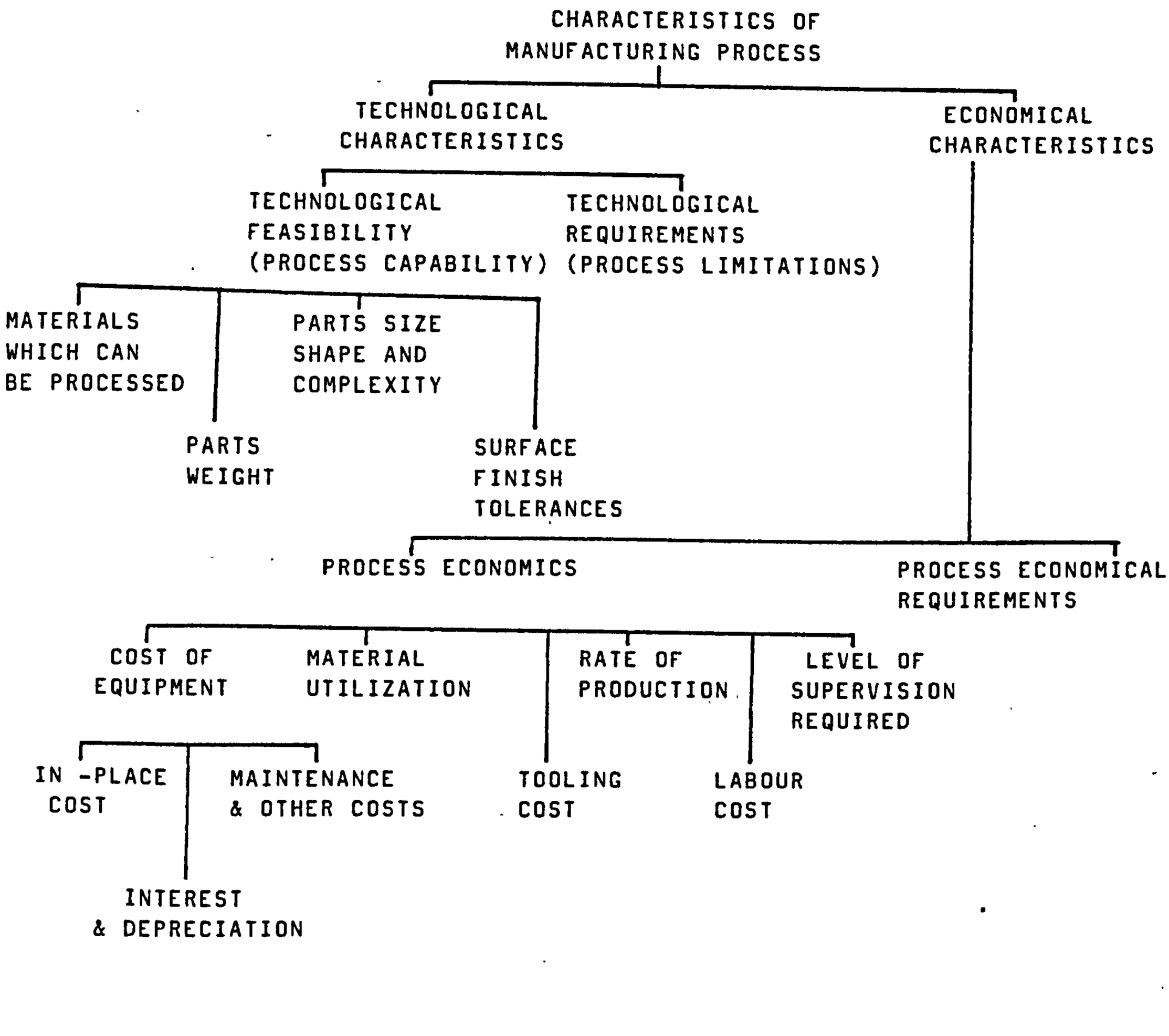

2.2.3 FORMS OF MANUFACTURING RESOURCES AND STRATEGIES

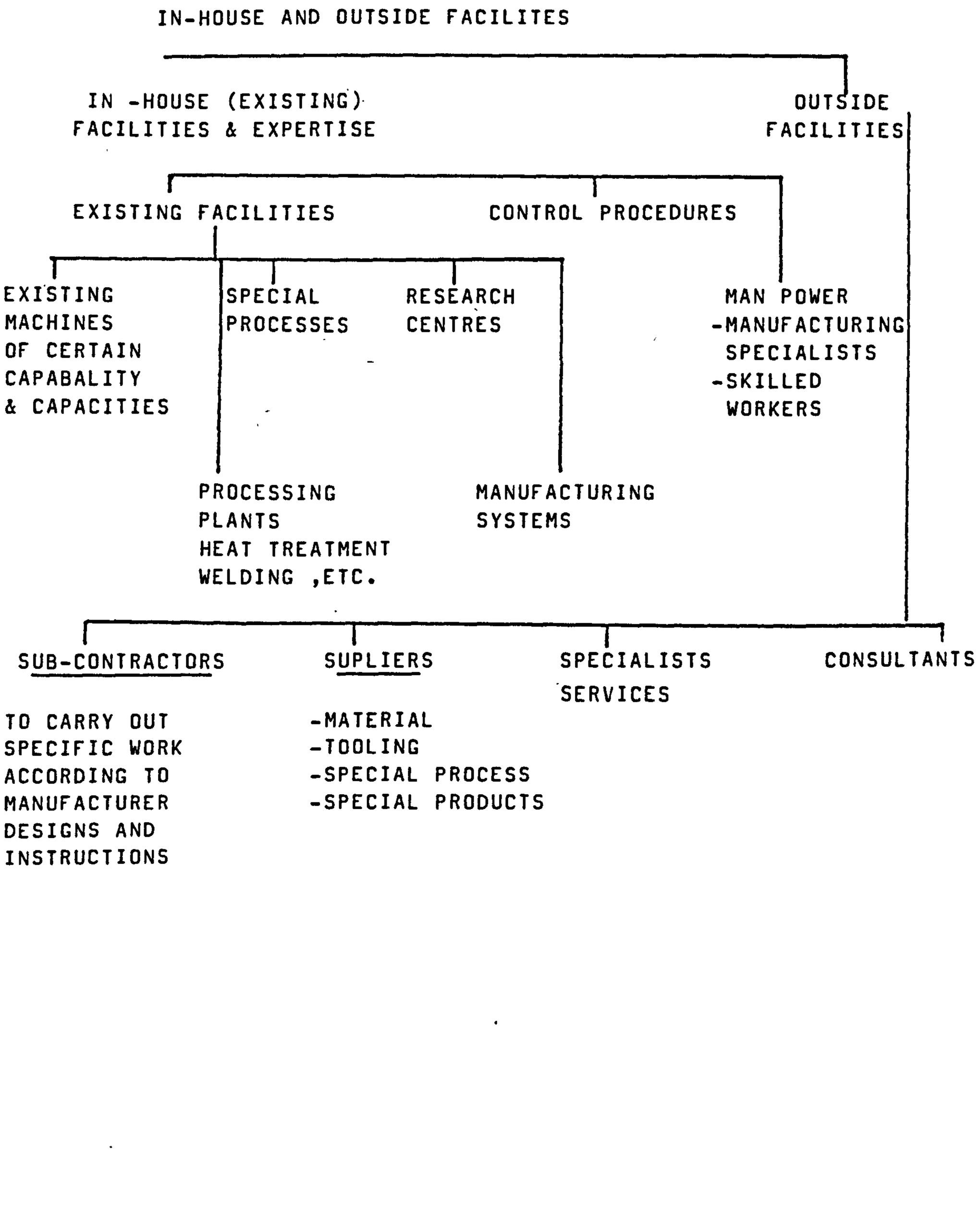

2.3 THE ENGINEERING ORGANISATION , ITS OBJECTIVES AND TASKS

2.3.1 OBJECTIVES OF ENGINEERING ORGANISATION (18-19)

The Engineering Organisation , in general , will have multi-objectives to achieve. The most common ones are:-

-Profit maximisation
-Organisational growth
-Organisational efficiency
-Industrial or market leadership
-Social and employee welfare

In the present competitive market, however, the prime objective of any business has to be assumed and remain the ' Business survival'. It is through achieving such prime objectives that the organisation could practice its desirable activities and accordingly achieve any other objectives.

Business Survival , however, can be secured only through fulfilling one basic criteria; this being the achievement of a continuous return on capital invested. Such a return should be sufficient to cover the market rate of interest, some compensation for the risk taken and the maintenance of real value of the investment .

2.3.2 THE TASKS OFF THE ENGINEERING ORGANISATION

In the Engineering Manufacturing Industry, achieving the continuous return on capital investment would depend on te Organisational ability to manufacture and market a comercially successful product; a product which satisfies pre-establised Market requirements and , when sold at the market price , yields certain return .

Taking into considerations that, on one hand , there is a need that exists which is to be satisfied at a certain price, and on the other hand there are certain limited resources available, the Organisational overall task would be to match the two together in the best manner to yield at maximum possible return on investment. (Fig 2.3)

This task can be broken down further in a conventional manner and allocated to the individual key functions of the Organisation as shown in Fig 2.4.

The designer task can be represented by fig 2.5.

FIG. 2.1 THE PRODUCT REQUIREMENTS

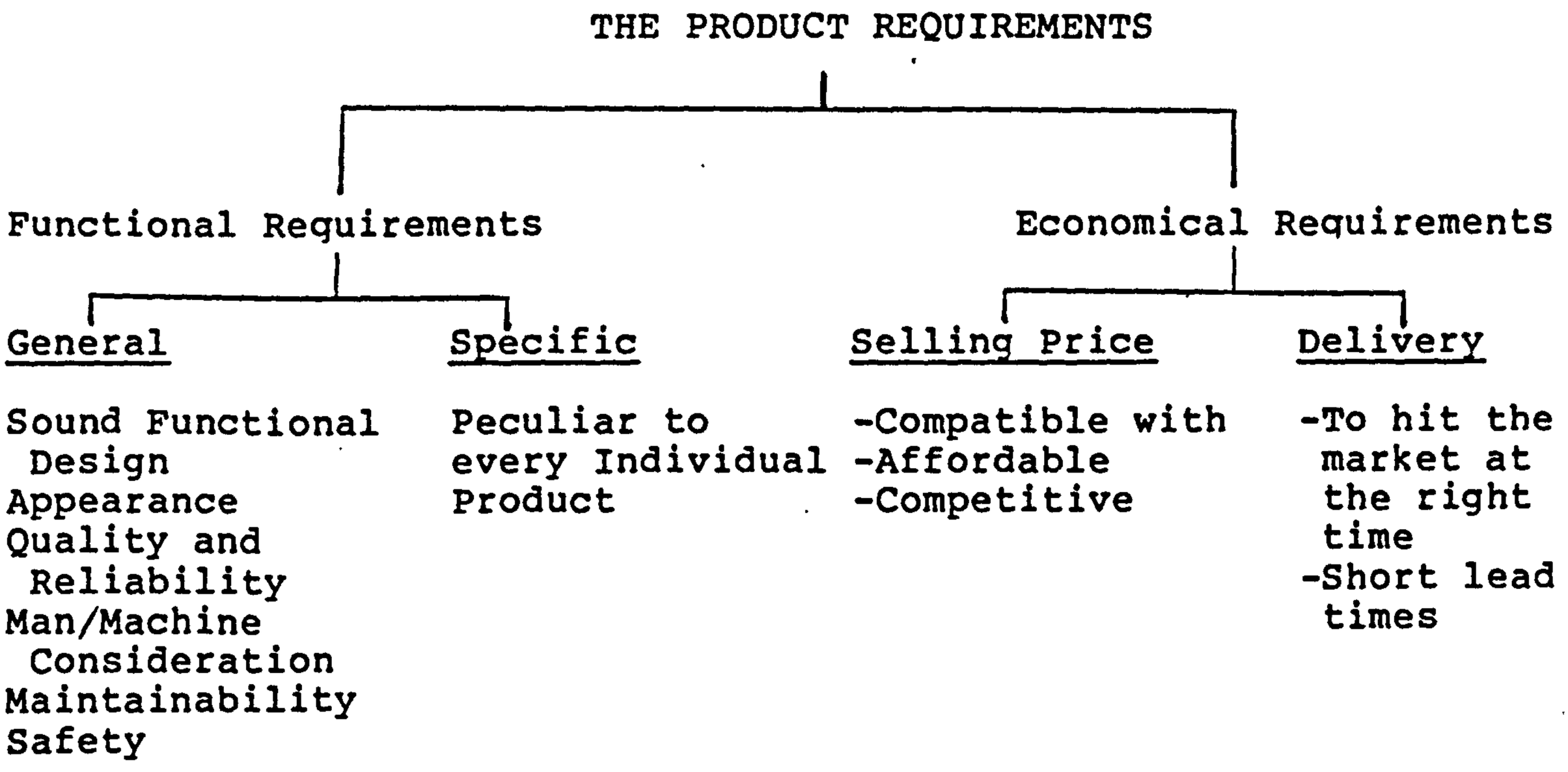

FIG. 2.2 PRODUCT LIFE CYCLE AND LIFE SPAN

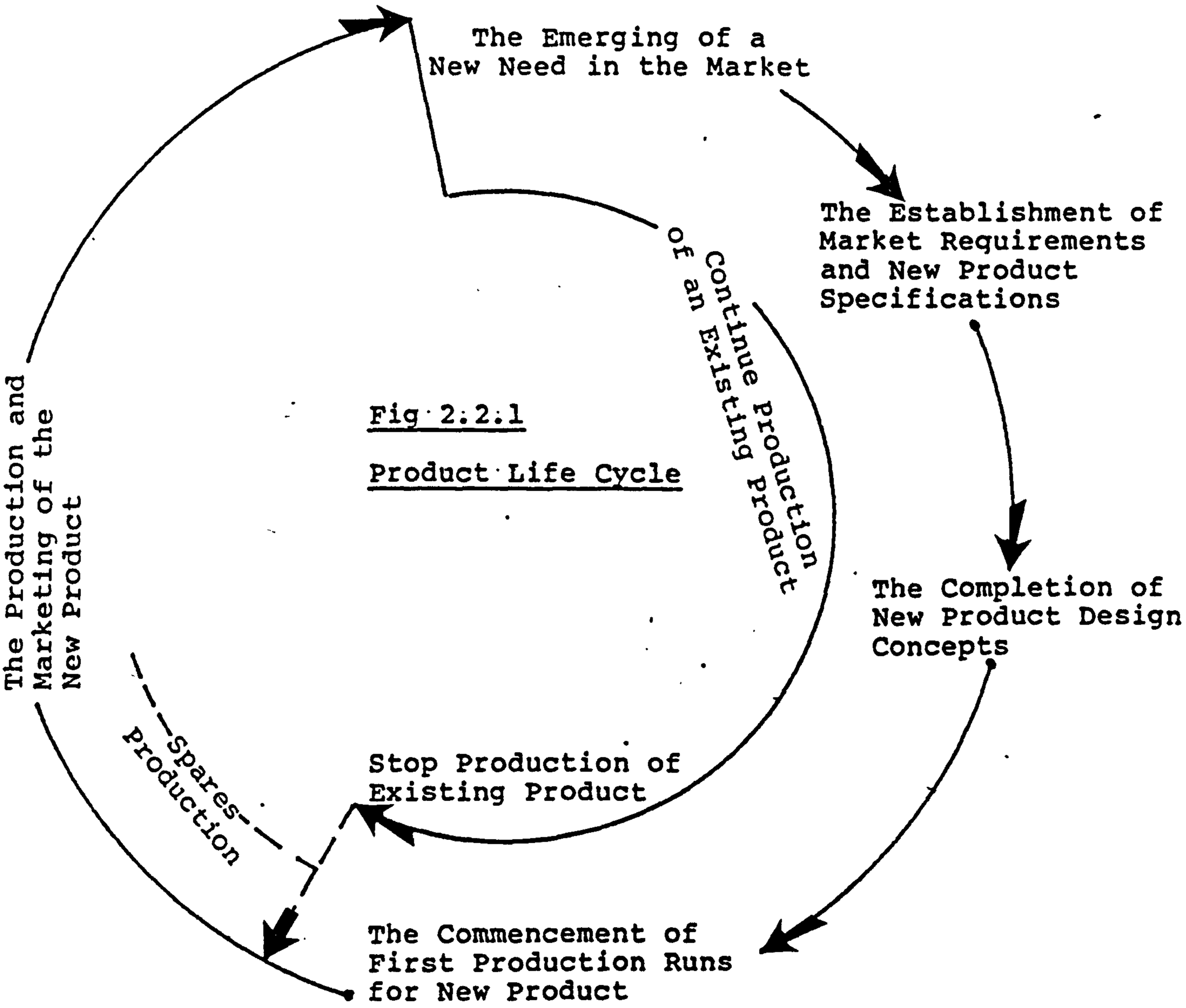

Fig 2.2.1

Product Life Cycle

Fig 2.2.2
Product Cycle Time

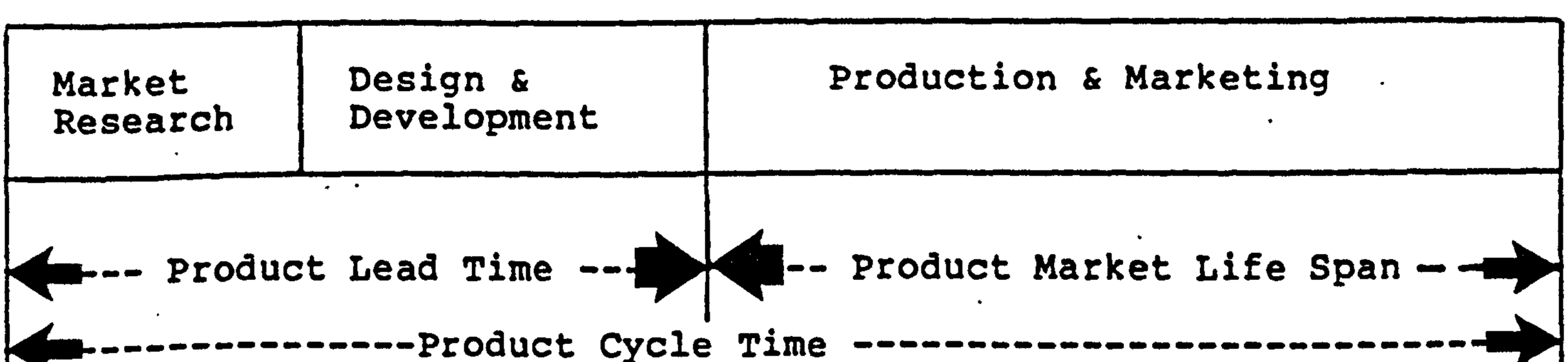

FIG. 2.3 THE ENGINEERING ORGANISATION OVERALL TASK

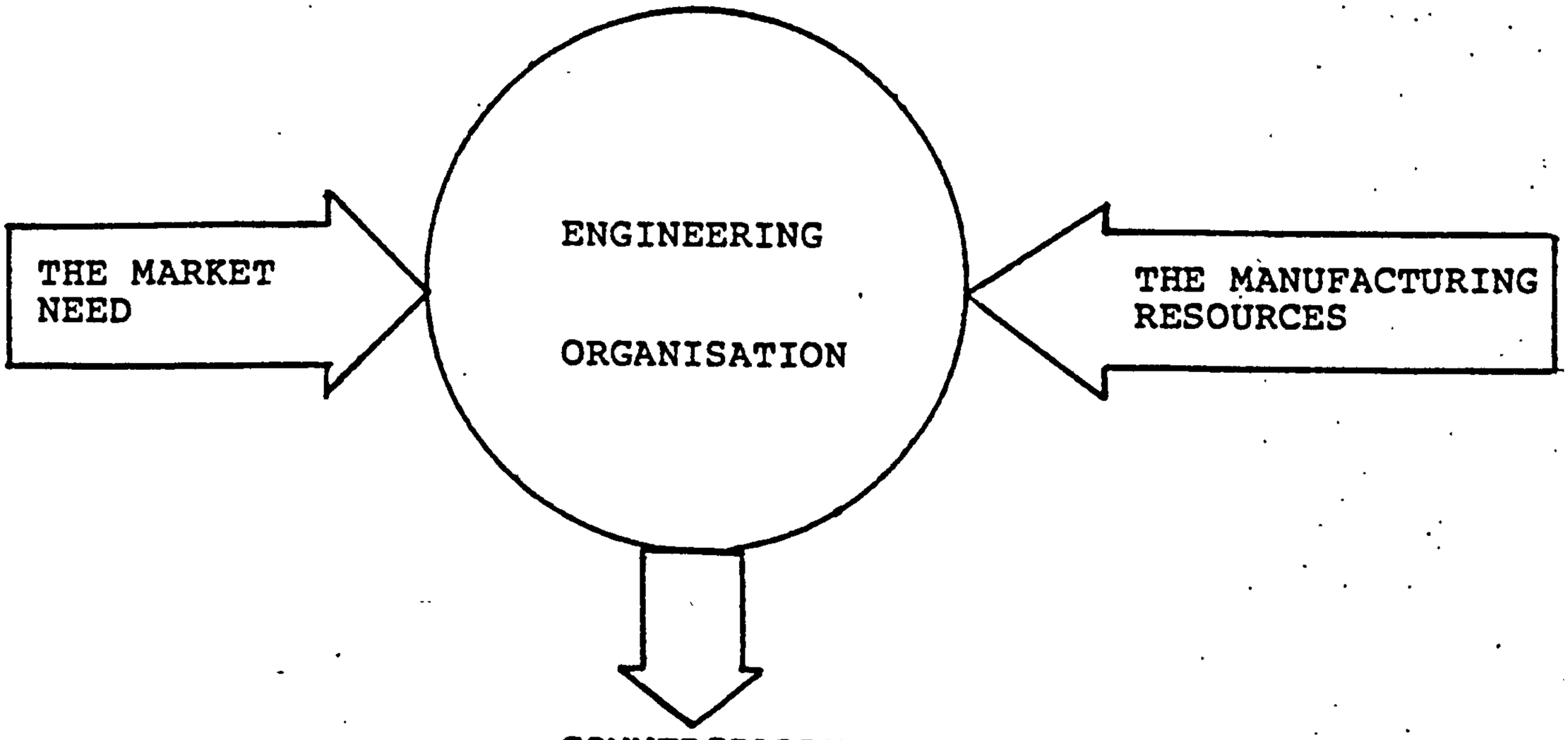

'Bearing in mind that the overall objective is to achieve continuous return in capital invested, the Engineering Organisation is left with the overall task of matching the available manufacturing resources with the pre-established need with the immediate objective of producing a commercially successful product'.

FIG. 2.4 TASKS OF VARIOUS FUNCTIONS OF THE ENGINEERING ORGANISATION

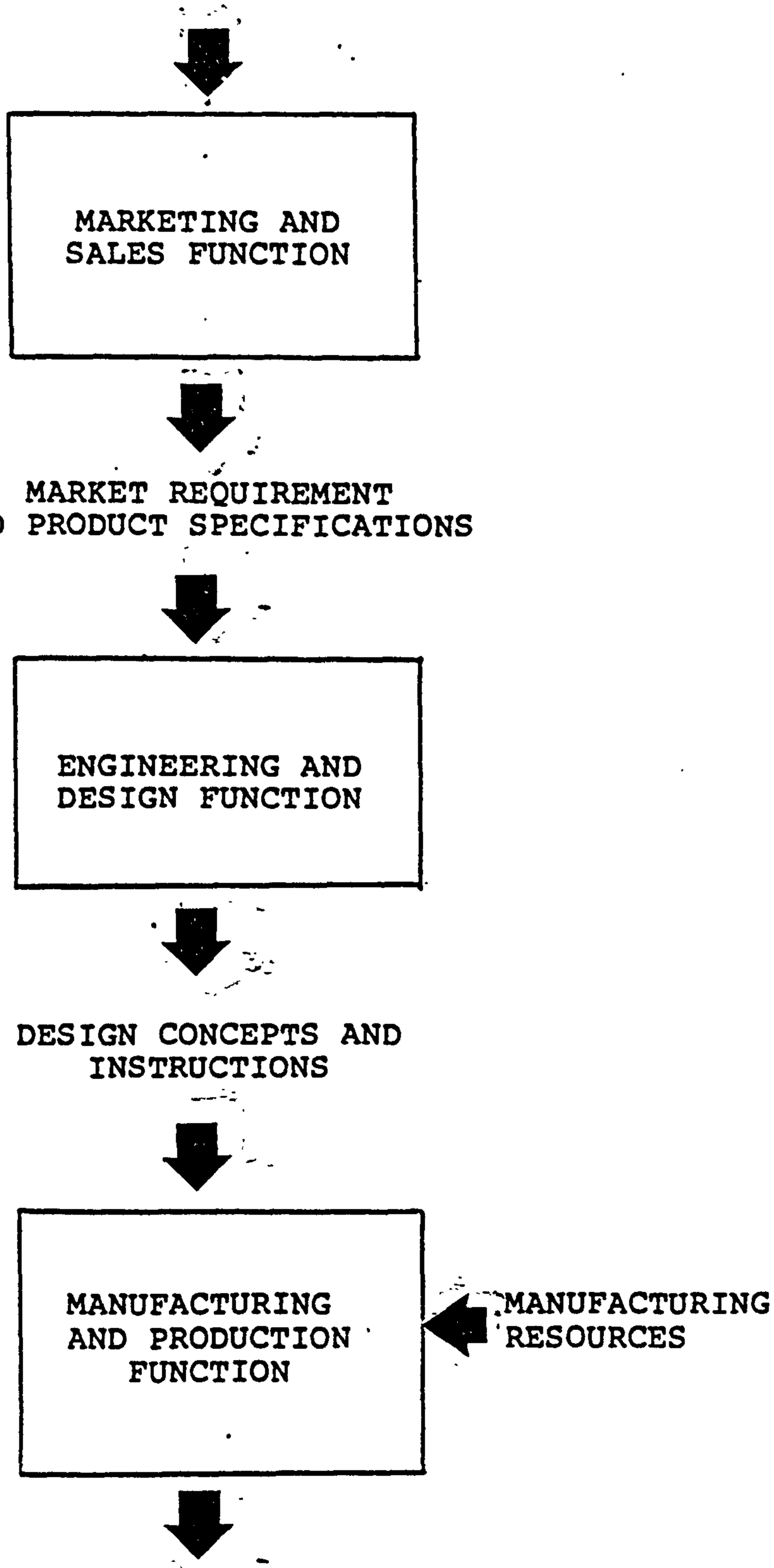

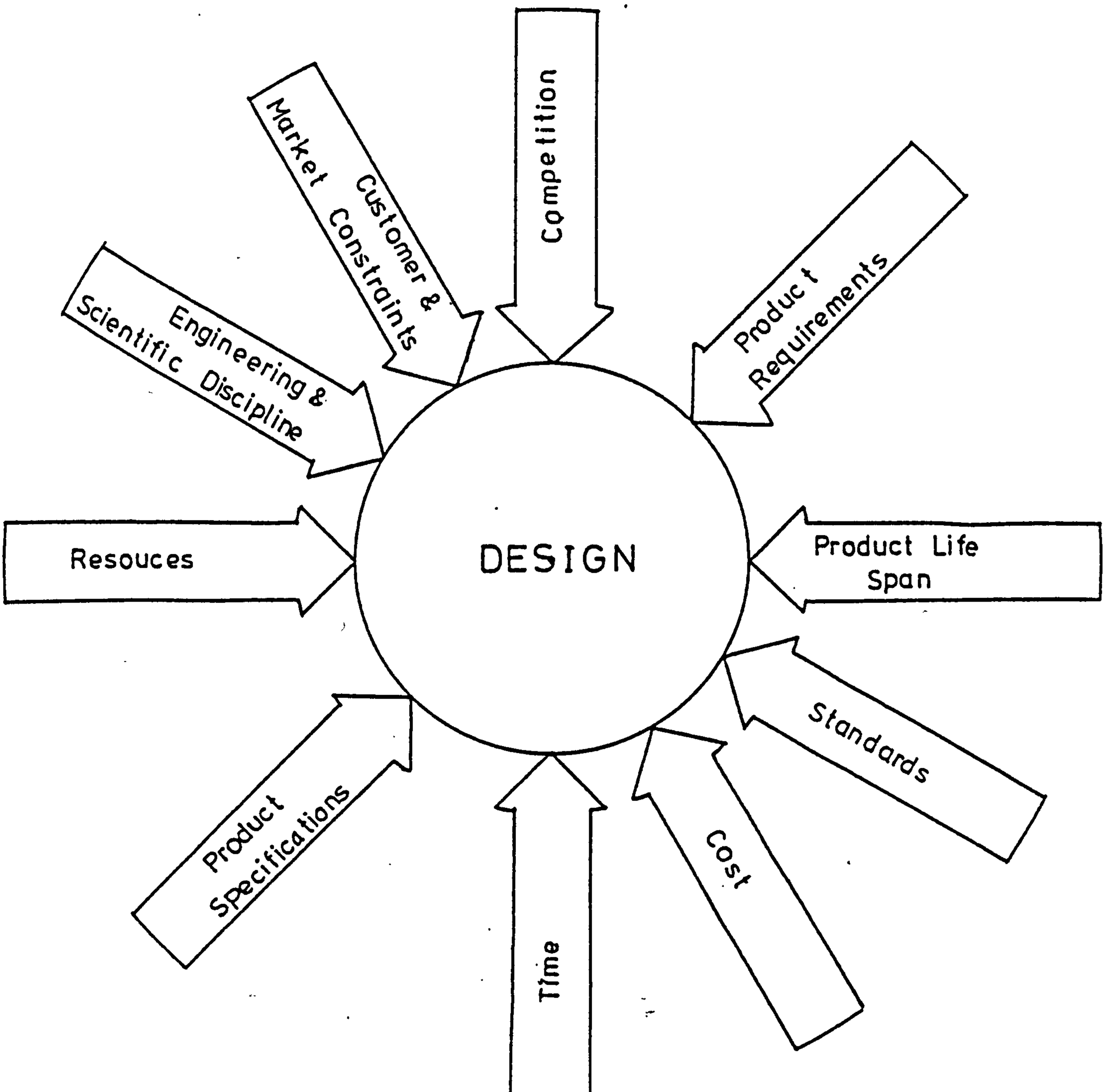

Fig. 2.5 Designer Task.

CHAPTER (3)

VALUE ENGINEERING LITERATURE SURVEY

3.1 INTRODUCTION

Although the study of value engineering concept was planned to be part of the present invetigation, an early resource to this study was inevitable , mainly to support the strategy of the research. At the early stages of the research , although it was established and agreed by C.I.R.P. members that there is a need for a new technology to meet a growing problem of rising of manufacturing costs , it was not clearly established how the proposed design for economic manufacture concept should be best developed to satisfy such a need.

The survey of the value engineering practices and techniques was , therefore, aimed at assessing the suitability of the cocept as a means to satisfy this growing need.

Certain points were identified as being the target of the study , as follows:-

(A) Application of value engineering in relation to product design, in particular at the design manufacutre interface. Basicaly to investigate whether value engineers have arrived at a rational approach to optimise the component design for manufacture.

(B) The use of cost data for design purposes.

(C) Informatin available to value engineering ; type of information and the form in which these information are presented.

The results of the survey have not fully answered above points.

This chapter reviews in some detail techniques and tools which are available to value engineers to support them in solving their value problems. The history of the value engineering concept is also reviewed .

Preliminary assessment of the value engineering concept as a result of this survey is discussed at the end of the chapter.

3.2 HISTORICAL BACKGROUND

The material which is given in this section is based on information obtained from people , who are reasonably familiar with the history of the subject through practical involvement in its development. wherever possible the information given is supported by literature on the same subject.

3.2.1 THE INTRODUCTION OF VALUE ANALYSIS BY "GENERAL ELECTRIC"CO.U.S.A.

The birth of the idea of value analysis started early in 1945 the Sales Department of the General Electric Company(U.S.A.) had announced to the Company Management that a "Temperature Control Device " was suffering a severe drop in sales. The device was operating efficiently but the cost was beleived to be too high and the Sales Department was desperate to save a cent of the cost. Harry Erlicker, Vice President of Purchasing and Traffic , and his colleagues decided to study the device in an attempt to reduce its costs. Individual parts of the device were examined thoroughly to find out alternative ways of supplying these parts more economically. The design of the temperature device was found to have inhibited many unnecessary features which could be eliminated to save some costs without having to impair the performance of the device. The design was altered accordingly and many dollars were claimed to have been saved. Details of design alteration to the device under study is given in Fig(3.1)- (20).

Subsequent to this exercise, other general Electric products were examined in the same way and similar savings were achieved .Up to this stage, however, cost reduction excercises at general Electric had not taken any formal approach and savings were believed to have been achieved by chance.

No change in the situation occured , until the outbreak of the korean War.The war resulted in shortages of strategic materials (Rubber,Brass,etc.) and like many other Companies in the United States General Electric had to change its existing product designs to accommodate the new material specifications. Again Harry Erlicker and his colleagues were given this task . As a result it was found , by chance , that design changes to accommodate new materials had not only resulted in cost savings but also in

improvement in the overall performance of the product (21).

After the Korean War , Harry Erlicker, having noted these facts, proposed that a cost reduction approach be developed which would enable engineers to propose lower cost alternative materials by intention rather than by chance. It was decided that examination should be conduct on overall product value and for this Harry Erlicker coined the term"Material Value Analysis" (22).He in turn assigned this task to Larry D. Miles the purchasing Agent of General Electric Division .

Larry Miles carefully studied the various exercises in an attempt to device some pattern or rules through which materials costs savings can be achieved. Surprisingly Miles went considerably beyond his original objective, i.e. devising material value analysis technique, by considering all aspects of product costs and eventually in 1947 he succeeded in developing some systematic approach to product cost reduction which he named " VALUE ANALYSIS".This was followed by the establishment of the Value Analysis Department inside General Electric Co. which was run solely by Miles himself . Two years later, the new Value Analysis approach was first published by Miles in a special report in the "American machinist " in 1949 (23). The report reviewed, in general terms the approach and the philisophy which has been adopted by General Electric in the precedig years to improve the Company profitability . In this report Miles revealed for the first time that General Electric saved millions of dollars through the adoption of "Value Analysis".

This report by Miles was followed by other reports which incorporated latest advances and achievement, as a result of the application of Value Analysis Technique (24,25).

The Department of Value Analysis at General Electric had been expanding at such a rate that by late 1950's ,120 Analysit were engaged on a full time basis in devising value analysis programmes for all branches of the General Electric Company (25) .

3.2.2 THE EVOLUTION OF VALUE ENGINEERING BY THE BUREAU OF SHIPS , US NAVY

In the early 1950's the Bureau of ships of the U.S. Navy was confronted with the fact that during the preceding twenty years the cost of building ships had increased too much in proportion to other commercial products.Whilst the consumer price index went up by 180%, the Military shipbuilding cost across the board went up by 510%. Although it was admitted that ships at that time had increased in complexity and in their fitting capability , there was a growing concern for this problem and great effort to combat these rising costs, (27).

To help achieve its target, the Bureau of Ship sent a group of engineers into industry to investigate if anything new was being done in the way of attacking this problem . Among several cost reduction approaches which where currently in use in industry at that time , the Value Analysis Program of General Electric Company seemed to be more in line with the aims of the Bureau. After a long consultation with the Value Analysis Department of General Electric Company , the group went back to the Bureau and instigated the birth of a new engineering office. A staff office to the Chief of Bureau , was finally established in April 1954 and entitled the "Value Engineering " Office. The aim of this office was reducing the cost of ships and the equipment that goes into ships" (MIL -V-19858 ships and Bu Ships instruction 5450-33 serial 741-861)(28,29) . As a result of establishing the " Value Engineering Office " many value programs were devised and tremendous savings were claimed. The experience gained from these value programs of the military ships building was used by the "Value Engineering Office " to develop the original value analysis technique to a more unified approach which would suit their particular application . This was finally called "VALUE ENGINEERING, (27-29)".The introduction of value engineering by the Bureau of ships , gained wide recognition by the military and electronics industry, which included the training of engineers to value approaches on a wide scale. Value Programs were set in almost every shop and high savigs were reported. This was followed by the US.Department strongly supporting the application of value engineering in all military contracts,(31-34).

3.2.3 THE DEVELOPMENT OF VALUE ANALYSIS AND VALUE ENGINEERING

The " value Analysis " of General Electric and the " Value Engineering " of the Bureau of Ships both gained recognition by the American Industry through publicity. The two approaches however, had slightly different emphasis and therefore , every individual industry selected those techniques which most suited its problem , with the main objective of reducing costs. Gradually the two approaches were blended together and the terminology of "Value Analysis" and " Value Engineering " were used synonymously, (26). In 1959 groups of Engineers who formerly worked in the value analysis division of General Electric, established a consultancy business to sell value programs and services to industry. This was named " Value Incorporated Ltd.".

3.2.4 THE INTRODUCTION OF VALUE ENGINEERING TO THE BRITISH INDUSTRY

There are evidences that the Value Engineering concept had been introduced into, and implemented by the British Industry by the mid 1950's(35).Substantial savings were claimed by G.E.C. and Joseph Lucas in thier early years of experiencing the application of Value Programs (35) . It is believed that the concept was learned through the publicity media and also through consulting the General Electric Company of the United States. "Value Incorporated Ltd. " also had a major role in introducing value Engineering to many industries in Britain.

3.3 THE CONCEPT OF VALUE AND THE PHILISOPHY OF THE VALUE APPROACH

Since the Introduction of Value Analysis by General Electric in 1949, a re-establishment of the original philisophy of Value Analysis has taken place by value workers, several times.
This has reflected in the application of the technique and in turn on its methodology. The change of the philosophy of the value approach is discussed in this section .

3.3.1 THE PHILOSOPHY OF "VALUE ANALYSIS "AS ORIGINATED BY GENERAL ELECTRIC

L.D.Miles in his initial report (23-25) have defined Value Analysis as a way of thinking and acting. To any group in the company , Value Analysis was considered to offer a basic aproach to greater value through principles and procedures which is universally applicable and readily understood.
The term value was not defined in Miles report. However, analysing the value of a part was defined as " finding whether it is worth the money".This finding is achieved through applying ten measures of value , i.e. ten questions. It is through the application of these ten questions ,that the value analyst , the designer or the purchasing officer can arrive at a better value part or product.Fig.(3.2).
In any value programme , three main functions are to be thoroughly involved; purchasing, Engineering and Manufacturing . The prime role in the program is allocated to the purchasing function as to enable the Company to make a full use of the outside technology through close and continuous collaboration with the suppliers and specialists Fig.(3.3).In engineering and design , the role of the engineering department in Value Analysis is to have a new outlook on the component part design, which allow closer examination of the part,its function and features, considering all possible changes with two basic principles kept in mind, the elimination and simplification . The role of the Manufacturing function has not been emphasised, but it is gathered that " Value Analysis"principles represent a new tool to personnell in both methods and planning .
The value Analysis program was designed to serve in two areas to analyse existing product, and to aid new product design. In

analysing existing products the value analysist is to follow systematic procedure and apply certain principles with ultimate objective in mind of " Equivalent quality with less costs ".Fig .(3.4). The success at his stage depends to a large extent on the analyst who has to be persistant digging for results, considering every possibility , talking with associates in Engineering Manufacturing and Purchasing , contracting suppliers and specialists, questioning every aspect of value improvement, speculating and judjing.

Miles in his reports (23-25) gave examples of how substantial savings were achieved through the application of the technique (see Fig (3.5-3.7) for typical examples.

It can be gathered from the given examples that most savigs were achieved through improved purchasing techniques, i.e. through making use of latest development and technologies of suppliers. This can be interpreted by the fact that in order to overcome General Electric's original problem i.e. the shortage of material , an intensive search for alternative economic materials through the suppliers has to take place. This can only be the task of the purchasing department. And for this reason it can be strongly argued that Value Analysis in its original form was a " PURCHASING TECHNIQUE FOR PRODUCT COST REDUCTION' .What made Value Analysis different from earlier buying methods, is the wide scope of its activities, and the planned , methodical aproach it takes to getting the best ultimate value for the money spent , (36-38).

3.3.2 THE PHILOSOPHY OF VALUE ENGINEERING AS DEVISED BY THE BUREAU OF SHIPS :

The reports of the Bureau of ships of the U.S.Navy , indicated that the so called " habits and attitudes " of designers, specification writers, equipment engineers and architects in industry and the Government are in a large part responsible for the increased cost of equipment and shipbuilding (28).

It was also claimed that Military Engineers have a " Safety Complex " which is responsible for over complicated designs. This was further qualified by the statement that Military Designers, because they are dealing in many cases with human lives, reliability has become their chief criteria, and costs have become something of

minor importance to them .

For these reasons when the Value Engineering office was established, to be primary responsible for costs, the value approach was directed towards achieving cost savings through the study of the functional aspects of the design to ensure that only the necessary reliability standards are achieved at minimum possible cost. Because of the change of philosophy, from that of General Electric , the resulting value engineering had different techniques. Some twenty techniques were developed to be used as necessary to obtain the primary purpose, maximum function at minimum cost, Addendum (I).

In addition to the twenty techniques, a value engineering job plan was also developed. This job plan consists of five phases or steps as follows:-

(a) The Information Phase

(b) The speculation Phase

(c) The planning phase

(d) The execution phase

(e) The Reporting phase

These phases are broad overall areas which give the Value Engineer guidelines in planning , executing and carrying out a Value Engineering Project , and bringing it quickly to a logical conclusion,with efficient use of time and effort.

In executing the above phases and in applying the value engineering techniques the main emphasis are in the function of the part of the product, and how it can be best achieved at lowest cost. With this development taken place, the value engineering technique became more or less a " Functional Approach to Product cost reduction through change of Design. ".

Refer to figs(3.8),(3.9) for typical examples,for cost saving through the application of this approach.

3.3.3 MODERN PHILOSOPHY OF VALUE ENGINEERING

The wide and successful application of the value engineering technique in industry , as deviced by the Bureau of ships , has allowed value engineering organisations to conduct more research in this field. This has involved the establishing of a clear definition of value and identification of the reasons for poor value .As a result a more comprehensive technique has developed . The later is discussed in details in section(3.5).In this clause the new philosophy of the value approach is discussed ingeneral, under A,B,&C below.

(A) THE CONCEPT OF VALUE

Several attempts were made to establish a definition for value , as follows:-

- " The best value is the lowest cost for providing a function , at the desired time and place , which meets all essential specifications"(3).

-"The value of any service, material or product is established by the minimum cost of other available alternatives, materials products or services that will perform the same function "(40).

- "Value is the lowest price to reliably accomplish a function of service"(41).

-Crum (30) in his attempts to define value, first referred to the definition of " Commercial Success " as being the arrival in service of a product giving its promised performance , purchased at the promised price and delivered on the promised date. He then expressed value pictorially by the analogy of the milking stool(Fig 3.10) emphasising the importance of keeping the three factors of performance, time and cost in balance.

It has been agreed by all value engineers and value workers that the value can be expressed mathematically using the following form:

$$V A L U E = \frac{\text{Function}}{\text{cost}}$$

Also,

$$V A L U E = \frac{\text{Sum of Functions}}{\text{Total cost to satisfy them}}$$

$$V = \frac{F}{C} \qquad (21)$$

This equation gives much information . It shows that lowering cost without lowering function provides an increased o: value. This is classical value analysis and it differs from conventional cost reduction because it maintaines the function and does not lower this to a minimum acceptable level. It shows too that value is improved by improving function without change of cost. Or more likely in practice,both can be raised, with function rising more than cost (38).For value engineering purposes however, four types

of values are identified and used, as follows (21,39):-

COST VALUE :

"The value , the producer or seller has invested in an item and which he wishes to recover by selling it.

or :

" The cost of materials and labour, including overhead charges which is involved in manufacturing the article in question ".

USE VALUE

"The value that an item has for a customer or end user because of what the item will do for him , that is the functions it will perform for him ".

Or:

" The lowest cost reliably to accomplish a function or service".

EXCHANGE VALUE

" The power of the item or article to be exchanged for something else".

ESTEEM VALUE :

" The value that arises from pride of owner ship. Prestige, status, reputation of the manufacturer and so forth are elements of esteem value ".

"Cost Value "could be matched to manufacturing costs, "exchange value " to selling price (42).

Based on above definitions , value will mean different things to different people. To demonstrate this fact an example is considered;" The usual attitudes in a company that makes an electric appliance.

The designer of the appliance equates value with function and reliability . To the purchasing agent value means getting the best material at the cheapest price. To make the appliance, the production engineer's definition of product's value is that what it cost him to manufacture it. The Sales Department thinks in terms of the market place , the value that the consumer is willing to place on the finished product . To top management, the appliances value in the above example is a reflection of several factors that influence balance sheet arithmetic and share holder attitudes.

Respectively value is , use, esteem price, demand an profit (26). Of the different types of value, ' use value ' is the one of most interest to value engineer.

(A) THE REASON FOR POOR VALUE (43-45)

In estbalishing the technique, value engineers have developed arguement that poor value products, i.e. products which their costs are relatively high in relation to their functions, result because unnecessary costs, (i.e. cost associated with components, elements ofa system process or service that do not contribute to the performance of the required functions)are built in at the design stage and allowed to continue into production and througout the life time of the product. These unnecessary costs are due to human factors and others, some of which can be summerised as follows.

(1) THE INTRODUCTION OF "UNNECESSARY REQUIREMENTS "

In many cases requirements are stated simply because they have appeared in previous specifications and which for this or other reasons may not really be required.

(2) LACK OF MARKETING INFORMATION

if the marketing Organisation provides inaccurate or incomplete information then unnecessary costs can be built in , even before design and development have started.

(3) OVER EMPHASIS ON PRODUCT PERFORMANCE DURING DESIGN

Since design engineers , by the nature of their training are more conscious of performance than cost, the pressure on time often leads to insufficient or no consideration of cost.

(4) LACK OF COST ENGLIGHTMENT

To start with, engineers seldom bear cost in mind as an essential parameter in design or as an objective. This is mainly due to the fact that the terms of costs are not fully understood by Engineers. This in turn is because cost estimates and cost information prepared by the Accounting Department are inadequate to be used for design purposes.

(5) LACK OF INFORMATION

it is extremely difficult for an engineer to keep himself completerly up-todate with the latest development on new materials components and manufacturing processes. Ignorance of new cheaper materials and methods leads to the continuing incurrence of unnecessary costs.

(6) FAILURE TO USE THE MOST UP-TO-DATE MATERIALS OR METHODS

The decision whether or not to use a new technique will always be one that involves not only cost consideration but sound engineering judgement. In excercising engineering judgement it is easy to " play it safe " and stick with the old method . In many cases this precludes the achievement of cost objectives.

(7) OVER RELIANCE ON PAST EXPERIENCE

In accomplishing a required function , there is an understandable tendancy to think only in terms of how it was done before and not use the maximum creativeness that can brought to bear on the problem . This resistance to change by the engineers, can be a positive hindrance to creating new and less costly approaches.

(8) FAULTY COMMUNICATIONS

Analysis has showed that the average office man in industry spends 90% of his time in communication to accomplish his own work , and that each individual's ability to communicate is linked to his background education and trainning .So, fualty communication is not only expensive in itself but can be extremely time consuming .

(9) HABITS AND ATTITUDES

The habits and attitudes of people usually permit them to deal with problems with a minimum of efforts and thoughts. it is also common , when solving a problem , to depend on other's opinions , hearsays, half truths, speculations and theories of whole facts without justifications. This is best represented by Fig (3.11) Other reasons for unnecessary costs are the lack of ideas , the lack of a creativity, the honest wrong beliefs and the mental road block.

Since each of the above factors can be related to caused - by -

human nature condition , the existance of unnecessary costs cannot be blamed on one individual especifically.
Instead , unnecessary costs are the collective result of every one's effort (39).
Also one of the common reasons for poor value that in industry,(especially,in large companies with a multitude of products), there is always a trendancy towards"interia".i.e.once a product has been successfully launched, it will probably be made in much the same way with the same materials and components for years.

The objective outside look is missing and suggestion for improvement never ever occur to the people most intimately concerned with the making of a product(26).
The following are examples of poor value which may result from any of above causes (26):-
- A reliable appliance may come off the Designer's Drawing Board but with built-in features that are too expensive for production .
- The purchasing Agent may buy the materials specified in the design without being aware that new less expensive, equally reliable alternative is available.
- The production man may custom build the appliance from scratch without realising that outside shops with special facilities can mass produce certain components at far less cost.
- The Sales Department , pricing to match competition rather than reflect cost of manufacture, may find that the profit margin is wiped out.
- The absence of clear definition of value may force management to make decisions that are not based upon sound judgemet.

(C) THE VALUE ENGINEERING DEVELOPED APPROACH

In recognising the definitions of Value and the causes of poor Value , value engineers have developed a more comprehensive approach which can be used to improve the Value of any product, system or service.
The approach involves the detailed study of every aspect of every subassembly , component, purchased part, materials or service to find out where and how unnecessary cost can be cut out of it.
To achieve this objective , great number of techniques are called

for,which includes informative , creating , analytical , purcahsing, costing , design techniques and others. Many of these techniques are already in use individually or in combination by good designers, engineers and purchasing people as they do their jobs but the Value Engineering approach calls for using them in a specific order or sequence that multiplies their usefulness. The Value Engineering key techniques, the basic steps and the systematic procedure is discussed fully in section (3-4) of this chapter. During the application of these techniques the functions of the product, the system or the service , understudy are identified, analysed and evaluated. solutions are created and the best alternative solution to give the optimum value is selected. The Value Engineering Approach in its developed form has become more or less a " Functional Approach to problem Solving ". It is believed however , that although this functional approach could have been used in any value application , it is unfrotunate that the history of the technique caused the word Engineering to appear in its name as it has restricted its utilisation to Engineerig Industries(21).

3.4 THE VALUE ENGINEERING SYSTEMATIC FUNCTIONAL APPROACH :

3.4.1 THE VALUE ENGINEERING KEY TECHNIQUES

In support of the Value Engineering Approach , many techniques were developed and used by Value Workers in solving various porblems. Some of these techniques are only peculiar to Value Engineering but most of them were already in use by Engineers in their every day work. An up-to-date , and comprehensive list of these techniques has been compiled and is given in this section (21,28,36,42,43,46-54).

For the purpose of the present investigation the Value Engineering techniques are classified into "General and "Specific " as follows :-

(I) THE VALUE ENGINEERING " GENERAL RULES "

The following techniques should be considered with , and applied to , all Value Problems.:-

(a) Get all information and facts

(b) Get all available costs

(c) Use information from only best sources

(d) Avoid generalities, work on specifics

(e) Identify and overcome Road Blocks

(f) Use good Human Relations

(g) Use your own Judgement

(h) Use Company Services

(i) Spend Company Money as your own

(j) Act , but be brief

(k) Use a Value Engineering Job Plan .

(II) THE VALUE ENGINEERING "SPECIFIC TECHNIQUES'

The following Techniques are used in certain instances to solve specific Value Problems as and when applicable:-

(I) Apply the ten measures of Value

(m) Analyse costs, components and materials

(n) Note Function (define , analyse , cost & evaluate)

(o) Evaluate by comparison

(p) Employ Creative Techniques

(q) Blast, Create, refine

(r) Put a (£)sign on each idea

(s) Apply analytical creative purchasing

(t) Use industrial specialists to extend specialised knowledge and skill.

(v) Utilise Vendor's available functional products

(w) Utilise applicable Industrial Standards

(x) Put a (£) sign on key tolerances

Some of the above techniques can be considered either commonsense or a good engineering practice and need no further qualification , such as techniques (c,f,g,h,h,i,j,k,l,r,s,).

Technique (n) (note function , etc.) is the heart of Value Engineering and therefore is discussed seperately in detail in Section (3.5) under the heading. "The Value Engineering Advance Function Techniques".

For other techniques, a brief description of each technique is given below . The proper use of those techniques inside the Value Engineering Job Plan is explained in Clause (3.4.3).

(a) GET ALL INFORMATION AND FACTS :-

It is essential that before any Value Engineering Application takes place , complete information about the product, item or service under study has to be made available . This includes , Design , Drawings, Specifications, Market requirements, Functions, Materials, Manufacturing methods, Costs, Sales history, Stock level , Service history etc..

(b) GET ALL AVAILABLE COSTS

In order to achieve good Value Decisions, costs have to be meaningful.The difficulty comes from the fact that cost figures are usually developed for ensuring proper income tax Accounting , or overall profit accounting and these figures are often not meaningful for decisions concerning Engineering or Manufacturing . For instance, for the convenience of accounting, overheads figure are not accurately calculated but rounded off or a single blanket figure is used for all purposes. This calculated total cost figure for any item would not coinside with the actual costs of this item . For purposes of Value Engineerin application a full build -up and break-down of costs for each item individaully, with accurate overhead, has to be made available to ensure the achievement of proper value decision . Review item (m) below , for the more details.

(d) AVOID GENERALITIES AND WORK ON SPECIFICS

This particular technique has been interpreted differently by two different sources. According to the Bureau of Ships (28), the argument is that Value Engineering has its very basis in specifics. One should define the problem , Single out certain areas, clean them up systematically and deal with them specifically.

A differenct view, by the Department of Defence (56), has referred to generalities as being common statements which almost stop progress and prevent changes. Example of the generality statements are as follows:-

" It is not practical to make dies for this quantity "

"This is the only economic and reliable way of doing it ".

and soon .

In this particular example, generality statements (i.e. generalities)indicate that nothing more can be done for the anufacture of an item.

So one must deal with each problem thoroughly, proceed to break the situation down ito specific " Man-size" intergers of function and cost, and then apply the appropriate Value Technique and examine the reuslts.

(e) IDENTIFY AND OVERCOME ROAD BLOCKS

A mental Road Block is a decision which prevents timely development of appropriate Value Alternatives. Its cause may be a lack of information , habits and attitudes, wrong belief etc.. If a Road Block occurs, it has to be defined, facts have to be traced and the necessary action has to be taken to overcome it.

(m) ANALYSES COSTS, COMPONENTS AND MATERIALS

ANALYSE COST (50,52)

In analysing costs, a complete analysis of cost components is recommended before any Value Engineering is exercised .

Following Techniques are adopted (see Fig .(3.12) for typical (example)(52).

- Analyses Costs
- Analyses Cost Elements

  direct Material

  Direct Labour

  Manufacturing overhead
- Analyses Components & Process Costs. Incremental or conversion

costs

- Analyses Cost per :

  Year or period of time produced

  Similar kind or class

  Similar size

  Similar type

- Analyse cost per pound weight
- Analyse cost per dimension
- Analyses cost per functional property

Cost Analysis helps to pinpoint high cost areas in design which in turn allows the right value alternative to be developed.

EXAMPLES COST ANALYSIS FOR A BEARING ASSEMBLY (50)

A Bearing Assembly consisting of a cast iron part to take two bearings, painted for corrosion , was investigated as the total manufacturing cast was believed to be high. The following procedure was carried out:-

(1) The first step taken was to break down the cost of the Assembly into meaningful factors.

Total Cost	:	$ 11.00
Materials	:	$ 1.50
Labour	:	$ 1.80
Overheads	:	$ 7.80

It was obvious from the preliminary figrues that overheads are particularly high and not proportioned to the direct Labour or the direct material figures.

(2) It was decided to go one step further to break down the elements of costs into materials and operations (which are necessary to complete the part) to find out which of these are particularly high cost areas.

For this it was found it is necessary to decide on the following :-

a- The correct list of materials & operations for analysis, those which relate to costs.

b- The correct list of cost factors, i.e. the shortest, detailed and most comprehensive list.

In answer to (a) , the following list was chosen:

I r o n

Sand Cast

Machine Casting

P a i n t

Paint Castings

Bearings

Assemble

In answer to (b) , the following factors were chosen :

-Materials

Raw Material

Purchased Parts

-Labour

set up

operate

-Overheads

The two above lists were used to complete a structure for a table which when filled in with cost figures, will permit one to pinpoint high cost areas and investigate reason. As a result , Table (3.13) emerged.

(3) At this stage, personal judgement has to be used to decide which areas of costs are relatively high , and what can be done to reduce these costs.

First , since it was initially decided that overheads are high, and by working at the overhead column at the Table , one can find that the overhead figure $ 4.25 of the machining operation is particularly high in relation to other overhead figures.

The immediate question would be , is this figure realistic ?

If the answer is yes, since it is a machining cost, can another machine tool be substituted ? or can the machining operation be eliminated alltogether by substituting another casting mehtod such as shell molding which will provide a better surface finish ?

This process can carry on and the same analysis can be applied to any suspected figure in the Table .

For details see (50)

ANALYSING COMPONENT PARTS (36,46,53)

Reviewing and Analysing individual parts or components of a complete product is a vital and essential part of the Value Analysis Program . The objective being lowering the cost of the part without impairing quality. The first step of the Analysis is to decide which part(i.e. component) is to be subjected to the analysis . This will depend on annual volume, potential saving ,

stock level etc. As the starting point for analysis , all relevent information about the part under consideration has to be obtained. This will include an actual physical sample of the part , the price, how it is made , the cost of manufacturing , the vendor , gross weight and finished weight. Three main areas of attack is cosidered when analysing each part; its utility (i.e. use Value) its method of mnufacture with its consequent cost (i.e. cost Value) thirdly, what would be the best way of obtainig it (i.e. Esteem Value).

In questioning the parts utility one would look at its function and whether it is useful at all . If an item is not useful in some way then no one would want it , regardless of the cost of making it. The idea is to decide what function the part is to perform then figure out how it can be done better at lower cost. This basically concerns parts cost and design . Six basic questions are asked as follows :-

1. What is the part ?
2. What does it cost ?
3. What does it do ?
4. What is the function worth?
5. What else will do the job ?
6. What will that cost?

As a result of the utility analysis , should the design of the part prove to be sound enough for the intended function, the next step would be to decide on a better method of manufacture (i.e. one of less costs) . The idea is that there is always more than one way of making practically everything.

As maximum number of methods as possible should be considered for the given design . For each process that is worthy of consideration a detailed cost enstimate should be established, this should include material cost , direct labour cost of each operation, overhead and profit.

In establishing these cost elements, the concept of a " Representive Efficient Producer" should be used as a standard. That is one should try to use Labour and Overhead costs that are reasonably typical of Industry . These estimates are not only used to determine the most economic process but later on can be used by the buyers as a target cost, i.e. a powerful tool for negotiation

with suppliers.

The last area of attack , having decided upon the design and method of manufacture, would be the commerical aspects. This is concerned with the quantity ordered, standardisation , source selection ..etc.This is basically the role of the purchasing function of the Organisation .

In most cases the three different approaches, which are discussed above, are used in combination and simultaneously by a team of Engineers, to analyse any component part. In each case a judgement has to be made by the member of the team as to which approach is more relevant for application in relation to the part under consideration.This type of analysis may result in changing the part design , its method of manufacture and perhaps the supplier. Several examples and case studies is discussed in Ref.(53).see Figs(3.14A-B&C) for typical examples.

ANALYSING MATERIALS (36,47,54)

Analysing Materials for better Value is as much of purchasing Technique as it is of design.

There are three approaches to save material costs.

1.Using less material

2.Substituting a lower cost material

3.Adopting the right purchasing policy

The first two approaches are more of design technique, supported by purchasing. The third approach is purely purchasing .

In economising in material consumption the objective would be to minimise the percentage of the scrap. This is achieved either by a change of design, change of manufacturing process or both . it has even been suggested that maximum use of the scrap should be effected. This can be done by using the scrap to make smaller parts of the product on the manufacturer main factory or in case of envolving outside supplier, the supplier should be approached for a reduced price in return for being supplied with the scrap.

Saving from using cheaper material is , however, more obvious. This in turn can be achieved either by substituting an entirely different material or analysing the price structure of the material being used.

In order to succeed in substituting a lower cost material ,purchasing has to keep engineering up-to-date in relative cost of

various materials so they can design the job with the right material from the start. A better approach still would be to establish a definite understanding on the "Acceptability of Substitutes". In so doing , the Engineering Department are to release parts with every acceptable substitute material listed. This gives flexibility to buyers to plan their buying strategy according to availability and price.

In Analysing the price structure of the material , most metals have price structure that involve both base price and extras. With little effort through change of specification , design, etc. one can eliminate or reduce these extras, refer to fig. (3.15).

The Purchasing Department still have major role to play in Analysing Materials for better value. When buying materials traded on an organised market, it is sound policay to buy at the lowest possible price.

Although the prices of most materials are set by the market and even though there is relatively little opportunity for price negotiation in buying materials, there is still a scope for achieving good value results through the adoption of certain approaches as follows:(47):-

- Being allert to market fluctuations
- Making long range forecasts of price and availability.
- Substituting lower cost of " Higher Value " materials.
- Standardizing on a limited number of types and sizes.
- Carefully analyzing the price structure of the commodity
- Checking related purchase costs-shipping, packaging, etc.

Closely related to standardisation is the Analysis of the price structure. With most materials the bigger the quantity purchased, the lower the unit price. Therefore one of the major benefits of standardisation programs is that they help increase purchase price structure. To analyse the steel , or any other materials of similar price structure, for better value , six rules are being suggested:-

1- Look for some other materials that will do as good a job cheaper.

2- Make sure you are buying the lowest cost type of material (i.e. if using strip steel , it may be cheaper to buy sheet and slit it).

3- Buy the minimum quality for the job .

4- See if you can eliminate a fabrication operation by buying a

higher cost material .(pre- polished stainless sheet, for example , reduce hand polishing in the shop).

5- Do not overlook a lower cost source for the material .

6- Look for savings by buying the material in a more basic form .

(O) EVALUATE BY COMPARISON (51)

"Evaluate by Comparison " is an approach to eliminating high cost area and so improving the value of a part. The underlying assumption of this Technique is that, " If two similar items are compared in a prescribed manner, and one is more costly than the other, the lower cost item will suggest ways to improve the value of the higher cost item".

In applying this Technique to Design Problems , the proposed Design of the part or the subassembly under consideratin is compared with other existing well proven designs of parts that are similar in shape size, tolerance, function or other physical or mechnical properties. The cost of these comparable designs are estimated, and the ones that are less expensive are looked at closely to see if they will suggest ways to reduce the cost of the Proposed Design .

To apply the Technique to any Value Problem , certain steps are suggested which can be used for guidance. The success on applying this Technique however depends to a large extent on the creative ability as well as on the skill of the individuals which can only be developed by practice.

The folowing are logical steps to achieve a better value part through the application of " Evaluate by Comparison Technique":-

1- Identify the part to be analysed, and determine its present cost.

2- make a list of comparable designs, which can be similar in shape size function ...etc. If the Assembly is rather complex then it can be broken down to component partrs and the same to be applied to each part.

3- The costs of manufacturing those comparable designs are then accurately estimated using present materials, method of manufacture ..etc.suggested items which of higher cost than the original design are to be eliminated.

4- The most appropriate comparison item , is analysed to determine what is responsible for its lower cost.

The questions to ask are :- Is the lower cost due to .

- Manufacturing Processes?
- M a t e r i a l ?
- Similar Shape ?
- Design "the way the item performs the function"?

Once the reason for lower cost is known , it should be applied to the original design.

To illustrate the application of the above Technique two exmaples are given , the sutdy of a ground lead and a terminal Board Stud. The steps carried out for evaluation are illustrated briefly in Figures (3.16),(3.17)and(3.18) - Also a simple flow diagram of the evaluate - by - comparison Technique is given in Fig (3.19).

(P) EMPLOY CREATIVE TECHNIQUES (52)

What is Creativity ? and who can be Creative ?

The word " Create " is universally defined as " Causing to be or to come into existense " - In Engineering , creativity is the obtaining of a combination of things or attributes that are new to te Creator. This combination might include an existing device, mechanism , linkage, fundamental low, effect, or change in attribute such as size, shape or colour.

Contrary to what has been generally accepted, practice and research has proved that every one can be creative through the use of imagination, logic, chance, mechanical methods, or in other ways.

Why Creative Approach is required in solving Engineering problems ?

Severals factors stimulate the need for creative processess, every design is a compromise achieving only the best posible solution within a given time . New effects, new materials,and manufacturing processes are continuously being discovered and developed, and besides customer desires are constantly changing. Thus creative opportunity exists and always will exist in every phase of Engineering Activity .

What Stifles Creativity ? and how would this influence the Design

There are several factors which are responsible for limiting people's vision and their thinking and which result in useful creativity being not universally utilized . One of these factors is the fact that the standard of living progressively increases. These individuals become more self - satisfied with the status Quo, and self-satisfaction in other words contentment with what one has is the very enemy of creativity.

The most important factor, however, which is directly influencing the Engineers creative ability is their educational and training background. it is a well known fact that students during their educational career (i.e. in the school and college), are trained to use what in is known as fixed pattern solutions to tackle their problems.These are represented by :

The emphasis on subjugation to fixed and well explained test assignments, closely directed Laboratory experiments, detailed definitions, boundary conditions, applicable formulas and so on . These more or less are considered Study Guide Rails . Also students

are trained to tackle working problems which would have one approach one method and one answer. Fig. (3.20) represent schematically the change of ones attitude in relation to age and education .

Because of this educational background most engineers readily accept the conventional approach , and fail to realize that many approaches can be used to solve the problems they are responsible for. Not only that, but the methods for applying each of these approaches are numerous.

More important, training the engineers in the one problem -one solution philosophy have resulted in them experiencing difficulty in achieving what is known as " Understanding of the Fundamental concept involved ". As a result , by typically accepting the first method that occurs to them they encounter unforseen stumbling blocks from factors they neglect to consider. And instead of attempting to evaluate their mistakes, achieve new understanding as a result an rework the problem , they continue on , ending with a top heavy device difficult to manufacture and even more difficult to market.

<u>What is the Creative process? Its Objectives, Steps and Factors Influence its Success ?</u>

The immediate objective of the use of the Creative process in solving Engineering problems is to achieve the best possible combination of all involved attributes, i.e. Design concept , Material Process - etc.

In general the success of the Creative process would depend on the fulfillment of two Factors as follows:-

- A strong desire to Create
- Understanding in the area where one wishes to create.

The later factor is the Most important, and this is due to several reasons. basically, the usefullness of the idea generated in a creative session is strictly function of ones understanding of the fundamental concepts involved.i.e. the quality of generated ideas will become higher as one uderstanding of the problem becomes greater. And as understanding increases, the additional idea combinations that envolve will better satisfy the real needs. Further, understanding increases with frequency of exposure to a concept or to situation .

Then to achieve favourable results one has to plan and schedule the Creativity Process. This in turn can be schematically represented as show in Fig.(3.21).

The figure can be illustrated as follows, when a situation presents itself it should first be defined as basically as initial understanding permits. This should be followed by investigating the various approaches that could solve the problem and by searching for the specific method to accomplish each approach. Evaluating each method by asking"how could this be made to accomplish the problem definition, " permits a generalisation of the results , leading to a better definition is reviewed and the entire procedure is repeated.

Theoritically and practically, complete understanding occurs at infinite time, for the true definition place in proper perspective all the factors of quality, cost and customer need,difficult to place in absolute perspective , they change with advances as new materials and processes become available to the Designer and Consumers requirements vary .This is schematically represented by fig.(3.22).

<u>How to Improve the Creative Ability ?And how to Make the most of the Creative Process?</u>

To improve the Creative ability one needs to expand his accumulation of knowledge and sources for reference, improve through study his capability for understanding.

By following the recommended procedures, one can successfully create, but to create efficiently on a repeatable and predictable basis, one must plan and schedule this activity , using the steps in the Creative Process which has one objective, achieving problem understanding so that the best method should be abvious.

The following are some rules which can be followed in a Creative session and used to tackle any Engineering problem:-

- Express the problem generally-free from all side specifications or conditions.
- Assume that every idea will work
- Search for ideas without restrictions
- Participate with a competitive spirit.
- Capitalise on the mutual atmoshpere of praise and encourgement.

(Q) BLAST , CREATE, REFINE

This is purely Mental technique , helpful in reaching Value Objective bearing in mind the desired function to be accomplished:-

BLAST :Is to eliminate what is in the immediate picture (the existing design), and to generate alternative designs, materials, process or ideas which may accomplsish some important part of the function in an economical way.

CREATE :Modification is made to above alternatives so that the basic function can be accomplished without significant increase in cost.

REFINE :The best alternatives of those which have been created in the Blast and create stages are brought into view.They are further refined with the necessary modification added at more cost. The modification and refining is carried out until final design is reached , which should accomplish the basic functions at the most economical way available.

The clamp bar example shown in figure (3.3) is used to illustrate the BLAST-CREAT-REFINE TECHNIQUE.

(T) USE INDUSTRIAL SPECIALISTS TO EXTEND SPECIALISED KNOWLEDGE AND SKILL

Having established the specific desired function required, special knowlege in depth in the areas involved must be brought into the work to a greater extent before decision making . Knowledge related to Techniques, Processes...etc, are continually being developed and it is only the specialists who could advise on those processes which have become practical only within the last one or two years.

(V) UTILIZE VENDOR'S AVAILABLE FUNCTIONAL PRODUCTS

To save design time and cost and Manufacturer may use a Vendor's functional product to accomplish a sub-function of the whole function.

The available functional products commonly have low costs and can be used wihout expending time or money on testing.

(W) UTILISE SPECIALITY SUPPLIERS MATERIALS & PROCESSES:-

Speciality processes are processes which can reliably accomplish the required function for a singnificantly lower cost and which either exists, or could exist and would be developed by someone who leads in the technology involved if he understood the need for it.

(X) PUT A (£)(STERLING SIGN) ON KEY TOLERANCES:

Since tolerances are specified to obtain a necessary fit, or to allow essential Assembly , they therefore provide a function. The value held by the Tolerances can either be a use Value or an Esteem Value . From a list of tolerances, some can be provided automitically by adjusting machines, and these do not cost much. Others, may require additional speciality process and those are the one that produce shocking increase in the mnufacturing cost. Designers and Draftsmen add Tolerances to any design as a habit and standard practice even if they were not required. To enable the Designer assessing the Value of his Design, he will have to know the equivalent cost for each grade tolerance and compare it with the function intended to be provided by this grade.

In some text books the above Techniques (A to X) are called the rules of Value Analysis and Value Engineering.

Any value improvement would depend to a large extent on the proper application of these techniques to the right case at the right time. A general view to these techniques can show that they are tailor-made to attack the reasons for unnecessary costs (i.e. reasons for poor value), as well as to provide guide lines to achieve a more economical way to fulfill function.

It is believed that reasons behined the effectiveness of these Techniques is their simplicity and practicality.

For example : To avoid the lack of information the following rules have been developed:-

Get all information and facts

Get all the available costs

Use information from the best sources

Get the £ sterling sign on a key tolerance

And to avoid the lack of ideas, the following rules have been

developed:

Use the industry specialists to extend knowledge

Utilise vendor's skill and knowledge

Employ creative Techniques.

and for the honest wrong believes.

avoid generalities

for habits and attitudes:

Identify and overcome road blocks

and for mental road block:

Blast, Create, Refine

and so on .

3.4.2 THE VALUE ENGINEERING BASIC STEPS ;

In attacking any major Value Problem Value Engineers use the Value Engineering key techniques in three basic steps to achieve a better value solution . These are as follows:-

step(1) : IDENTIFICATION OF THE FUNCTION

The functions of any existing product or a desired function of a new product are determined and identified precisely. This is basically to find out which functions are basic and should be provided and which are unnecessary and should be eliminated.

STEP(2) :EVALUATION OF THE FUNCTIONS

All necessary functions of those which have been identified are given a monetary value to establish approximately how much it would cost to provide each function reliably.

STEP(3) : CREATE ALTERNATIVES

Having the required functions identified and given a relative cost several alternatives should be created and decision taken to determine the best alternative which would accomplish the desired function(s) reliably at the lowest possible cost.

The above three basic steps in turn are executed over five or six stages which are known as the value engineering job plan phases . This value engineering job plan is followed and adhered to by a preselected Value Engineering Team during a Value Engineering meeting session.

3.4.3 THE VALUE ENGINEERING JOB PLAN

The job plan is the heart of the value engineering systematic functional approach , and is aimed specifically at overcoming the reasons for unnecessary costs.

The Job plan phase is constructed so that it allows the application of the value engineering key techniques in certain specific manner which will multiply their usefulness.

It is therefore important that the diciplines which the plan imposes are willingly accepted by every one of the value engineering team.

The following are typical arrangements of Value Engineering Job Plan phases:-

(1) Orientation phase(problem definition)

(2) Information phase

(3) Analysis phase (Function phase)

(4) Speculation phase(Creative phase)

(5) Evaluation & Investigation phase (s)

(6) Implementation & Recommendation phase.

However, depending on the nature and the size o the Value Problem inhand, the job plan can be altered to accommodate a number of phases greater of lesser than those listed above.

The way of executing those Job phases and the actual steps taking in each phase are given below in some details.

(1) ORIENTATION PAHSE

This is the phase of problem recongintion . The problem here could be the high cost of an existing product or customer's need of a new product. At the same time it will have to be established in clear terms exactly what system, parts of a system , assembly, sub-assembly , component , process or procedure are under study. In all cases, enquiries go on to find out:

- What is to be accomplished ?

The answer to his question could lead to furnishing some information about the product in question or the need in mind in general .At this stage, all the basic necessary functions required can only be stated.

- What is it that the customer really needs or wants?

More details about the customer requirements regarding the performance and the appearance of the desired item .

In many instances this phase is combined with the next phase, the information phase.

(2) INFORMATION PHASE

This is the most vital part of the V.E job plan , as a good value decision could only be obtained when the information provided is sufficient and reliable.

Having known from the orientation phase what is really needed, all the pertinent information concerning the job in question has to be obtained.

The information required will concern the product and manufacturing.

Concerning the product :

(a) Application and market background.

Customer specification and requirements.

Actual operating experience with them.

Anticipated market requirements and market life.

The competitors.

(b) Engineering Background

-broad technical history of the overall product and project physically and performance requirements which are desired on the protect.

- material , weight , size , quality, durability, maintainability, tolerance, accuracy, appearance , surface finish performance , environment , etc. concerning the manufactuing.

(a) Manufacturing background

Manufacturing facilties - machines, process capability sequence of operations , equipment , standard tools.

Details of material utilisation - raw material .

Number of parts, sub-assemblies or assemblies.

(b) c o s t s

There are two types of costs needed:-

Actual costs

Relatives Costs

Actual costs : Direct labour, material and overheads and these cost should be meaningfull and complete.

Rlative costs : These relative costs can be given to machine operations, utilisation of material ..etc. in order to assist in selecting alternative materials, products and process.

(3) <u>Function phase</u>

V.E. is the technique of analysing value and inturn value can be analysed by evaluating functions. To evaluate the functions, first the required function of the product, item or operation must be determined and identified.

In this phase, therefore the value engineers have to accomplish a good portion of their task, which is the identification and

evaluation of the functions.

(a) Identification and determiation of the functions

The desired functions which were stated at the orientation and infromation phases can be described in only two words :

(Verb Form and Noun)

Such as : Transmit Power
Convey Heat
Resist Corrosion
Bear Load etc.

The reason why the function is identified is that it enables the planner to decide what data is important to be kept and what data is un important and should not be included. The value engineer can ,therefore, select the possible alternatives which provide these identified functions economically. The reason why the function is identified by only two words, is that it avoids the possibility of combining functions and attempting to describe more than on function at one time.

Both the basic and the secondary functions are dentified by two words.

Also, additional aid for describing the basic function is by providing answers to the following check list:

1. What is its purpose?
2. What does it do ?
3. What makes it work ?
4. What makes it sell ?

and for the secodary function , the following check list could be useful:

1. What makes it work better?
2. What makes it sell better?
3. What else can it do?
4. How does it support the basic function ?
5. Can the secondary function eliminate basic function item?

By using the two word definition and the answers to the above check lists, the functions now are precisely identified and described in detail .

(b) Weighing the functions

Before proceeding to evaluate the determined functions, the analysts should weigh, each function to eliminate the unnecessary ones.

(c) Evaluation of the functions

The evaluation here means to give a monetary value to the specific function .

The reason why the function shoud be evaluated and given a monetary value is to tell the designer roughly how much this function should cost. So, in case of multi-function product , when the values of the different functions are totalled,they would provide the value of the whole prouct, Item or operation in question .

The next step would be to reduce the existing cost of the product or the operation to this asigned value, or, if it is a new product , the cost of the proposed design should not greatly exceed the value limit.

Generally speaking, the evaluation is carried out by comparison , that is , placing value on the function by using the value of something readily known For example , in case of designing a lamp, the function is to ' provide light' and his can be evaluated by using the cost of match, candle or incandescet lamp, etc.

To carry out the evaluation , it is very useful to provide the analyst with various kinds of data as an aid to assigning the money equivalent for the function. The technique of evaluaion is primarily one of skill and it is a broad technique.Section (3.5) of his chapter discusses in detail most of the relevent functions techniques which includes function analysis and evaluation .

Having identified and evaluated the function , the next step will be providing the function economically , and this will be carried out in the next phases.

(4) Speculation phase :(Creative Phase)

At this stage of the technique, and after the required functions have been identified from the function phase, new ideas(alternatives) are produced to accomplish the desired functions at a lower cost. This is the creative part of the value engineering session where the team of the value engineers use their imagination and creativity to produce as many different alternatives as possible.

For this purpose , more than one technique has been developed :-

(a) Brain - storming

This is a creative technique based on group thinking in which a group of participants, who are knowledgeable about the product and the prodct life, meet together to stimulate and create new alteratives. Someone's idea would spark the others and so quantity is invited regardless of the quality.

Principal of brain - storming :

1. Judicial judgement is ruled out.
2. Freewheeling is welcomed
3. Quantity is wanted
4. Combination and improvement are sought.

The group of participants have a leader called a V.E. Administrator who makes sure that a deviation from the rules does not take place. Ideas created should be recorded as soon as they are conceived in order to capture their originality. Recording devices or a stenographer can be used for this purpose.

(b) Task force approach

This approach is based on group analysis of the function and the means of achieving to the function by representative views from different fields- personnel , engineering, tooling, methods, production , sales, etc.

The team of participants incldues a specialist from each field whose experience will enable him to contribute his own speciality to the overall problem .

(c) Specialists review approach

It is a technique of developing alternatives by independent review by specialists.

The analysis is applied in each area of the organisation as the product moves from the designs to the sales. This could happen either while the item is being designed and put into production or after it has actually been designed.

(d) Analytical techniques

There are techniques which have been used during the creation session in order to stimulate ideas:

- Attribute listing technique

In this technique, the first essential step is to list the attributes possessed by th product or item under review. These

attributes will include the physical characteristics of the item such as the material, the method by which it is made, the manner in which it perfoms its function , its shape, etc. By concentrating on each of the attributes in turn and endeavouring to change them in every conceivable way , new ideas for a more efficient competitive product may be achieved.

- Morphological analysis

Morphology pertains to the structure of things ; morpholigical analysis deals with the analysis of structure. Once the structure of the function is analysed, a forced relationship between independent variables of the structure is used to produce a large quantity of ideas.

Fig. (3.24) shows the structure analysis of water-tap handle.

The function is move - valve and the independent variables involved are :-

1.Source of energy -hand,foot , mechanical,etc.

2. Manner of operaion - push , pull , twis

3. Type of operating handle - cyclindrical , spoked, square

The box diagram shown in fig (3.24) contains 150 cubes, each cube containing a combination which represents an idea different from the other cube.

(e) Check Lists

This is one of the techniques which can be used to develop alternatives.

(Rfer to appendix (I) for typical check lists for the creation phase).

The above mentioned techniques are only an aid to the value engineers, who must rely on their own ability of imagination and , also on their creativity.

By the end of this phase, a large quantity of alternatives shoud be created and stated to be further checked and developed in the next phase which is the evaluation phase .

Fig(3.25)and(3.26) show creation sheets filled during V.E. creation session in one of the Amercian companies using value engineering in their work(55). It can be seen that the number of alternatives is always large regardless of the quality.

(5) Evaluation Phase

In this phase the idea developed in the creation phase is treated and expanded singly, or combined with the other ideas to obtain a workable solution for the required function . Fig. (3.27) shows the complexity of typical value problem at this phase.

Using the creativity, knowledge , experience , appraisal , refinement and creative judgement, the followig steps are applied to obtain an alternative which gives the most promise for good value:

(a) Refine and combine ideas

The different ideas are refined and combined together using a creative judgement in order to get the best combination which will accomplish the desired function at the lowest cost.

One of the techniques used for this refinement is the simple T-Chart techinque which shows the advantages and disadvantages of each idea . As a result of this technique, some ideas or group of ideas will stand out above the others, also some of these ideas will be put away due to lack of information. see fig (3.28) for a typical T-chart for making power cable of soduim .

(b) Establish cost in all ideas

In this stage, an estimated cost for the refined ideas is needed in order to establish a potential value for each idea. The cost here need only be approximate ,and give the general cost area where the idea falls. Then the lowest cost ideas are considered for other refinement.

(c) Develope function alternatives

This is the anlysis part of the phase, and the main purpose for it is to make sure that the developed ideas will accomplish all the functions and the specifications required and only the ones required, so again the unnecessary functions can be avoided.

The functions which have been identified, together with the required specificaions which have been determined before at the functions phase, are to be listed down starting with the basic necessary function and ending with the secondary functions in descending order. Then each idea or alternative has to be individually checked against the listed functions and a complete analysis caried out to see how far this idea has accomplished these functions, and if some funcions or specifications are not yet accomplished, the proposed idea has to be developed or altered in a

way to suit all the required functions at minimum cost.
At this stage, the data collected in the information phase about material , process and cost can be fully used and considered while modifying the proposed alternative in order that it can accomplish all the desired functions at the required spcifications in an economic way . In other words, this stage is that in which the previously gathered information and data , the defined functions,and the created and defined ideas are moulded together into a number of workable solutions.

(6) Investigation Phase : (Program Plane)

In this phase a final selection for the best alternative has to be reached.
The workable solutions which have been developed on the evaluation phase has to be further investigated and checked in sufficient depth and breadth to inspect how good is the value possessed by each individual solution .
The proposed solutions have to be challenged and checked for two important criteria ;Performance and Manufacturing
For the performance criteria, the design in general , the reliability , maintainability , etc. , have to be checked . For manufacturing , the material used and the method selected has to be checked.
Other criteria comes in second importance . This could be checking for packaging, storage, marketing , etc.
For checking any criteria, a check list is provided to the value team in order to help them in their assessment. .
Apendix (I) contains a typical check list for the design and manufacturing criteria , and others.
Now to provide a reasonable answer to such questions the following action has to be taken :-
(a) Consult industrial specialists and vendors
(b) Investigate special processes, special material
(c) Investigate applicable standards and functional product
After this questioning and answering session , the individaul alternative designs start to take their final shape, and yet can be finally assessed and value decision can be taken .
Value Decision :

A decision has to be taken to select the best alternative, i.e. the alternative which promises the best value. Among those workable solutions which have been developed from the evaluation phase and challenged to check their workability on the investigation phase, there is always only one solution containing in itself more value than the rest of the alternatives . Value here does not mean that this alternative is the cheapest , it means that the combination of all the necessary wanted caracteristics owned by this alternative is the best.

These wanted characteristics differ from case to case but generally speaking could be one of the following :-

1. Initial costs
2. Running costs
3. Performance
4. Quality
5. Durability
6. Maintainability
7. Lghtness
8. Reliability
9. Machinability
10. Cost of Production

One of the techniques used for a good value decision is the decision matrix.

Decision matrix techniqe is discussed in clause (3.6.2) of this chapter.

As a result of good value decision, different types of changes can take place such as changing the design of the item under consideration, changing materials, manufacturing processes,suppliers..ect.fig(3.29) schematically represents , all parameters involved in the value engineering decision process as seen by the author.

(7) IMPLEMENTATION PHASE : (STATUS SUMMARY & RECOMMENDATION)

The objective of this last phase of the job plan is to get action . Recommendations in the form of a project report, are submitted to the person or the group with decision responsibility for implementing the report's recommendation .

A follow up procedure is established to ensure proper

considerations and implementation of the report's recommendations.

Value Engineering Reprt:

The task of reporting value engineering effort is normally assigned to the V.E. Administrator. The report must include the tried design changes recommendations and the potential savings. This report should reach the appropriate management level and the departments affected by the changes . Also job detail objectives should be carefully recorded and disseminated to provide final samples,drawings and operations to those responsible for implementation .

Table 3.30 summerises the mechanism of the Value Engineering functional approach , i.e. it highlights the relationship between the basic steps, the job plan phases and the key techniques.

3.5 THE VALUE ENGINEERING ADVANCED FUNCTION TECHNIQUES ;

There are three basis function techniques ;function analysis,function cost analysis and function evaluation.

3.5.1 FUNCTIONS ANALYSIS (20,42,43,44,57)

Function Analysis is considered to be the heart of Value Engineering Funcional Approach .

In analysing the function of a product or subassembly ,every component part of the product hardware is examined, individually and in combination with adjacent parts, to identify every function which is being , or intended to be , performed by this part. Using a recognised methods of definition , all functions are then clearly defined. Finally , using judgement they are classified with regard to their contribution to the overall performance of the product , or subassembly , under considerations. Fig. (3.31) shows main logical steps of function analysis.

In so doing the Value Engineer is freed from the restrictions of thinking in terms of existing methods by which the product is built, i.e. Engineering , Materials and Methods, and is concentrating on what is to be achieved in terms of functions with a view to develope an alternative mean with which to provide these functions reliably at more economical way. Function analyis can be applied to products, services, proceses or operations.

(A) Identificaion & Determination of Functions

Proper Function Analysis entails the Identification of Functions to be carried out at all levels, Product level , subassembly level and finally component level .

At product level , functions identifications aims at establishing the main function or functions of the product . These , naturally, are inherent in the product specifications and can therefore be determined by refering to these specifications, which should reflect the customer requirements. Commercial products , since they intended to satisfy customer need, they are built with two types of functions contained in them , a use function and an esthetic function (Esteem) . the product use function is what makes it work ,i.e. what the customer wants it to do, e.g. to heat liquid, preserve food , convert energy ..etc.

The product esteem function is what makes it sell or what makes the customer attracted to it . e.g. its style, look, colour ..etc. large percentage of market Orientated products will have to perform both functions, possibly in varrying ratios, in order to be commercially successful.

At component level, functions identification aims at establishing the role of the compoent in relation to the particular subassembly design and can be determined by refering to the assembly drawing and by closely examining the design concept and instructions. In most cases parts will have more than one functions to perform , in which case all functions has to be determined.

It has to be noted that the function(s) of an item or component will depend on the particular application in which this item is envolved in and not on the way with which the item is made. This will help in the way that, for a component within a system or subassembly , irrespective of its design , one can establish whether it performs all the functions it is intended for or whether it is performing more functions than it is required . Therefore , a Value Engineeing excercise may end up improving the Value of an item by providinga new one which either perform the essential functions which it is intended to ,and which was not provided before,at the same cost or provide an item which would only provide those essential functions at less ost.

At subassembly level , functions performed will be some what between the product function and the component function .Refer to Fig. (3.32) for functions determinations at the various levels.

(B) <u>Definition of Functions</u>

Although Functions Identification and Functions Definitions are dealt with separately , in actual fact these two steps can be carried simultineously, (unlike what is shown in fig (3.31))Functions are to be defined using Verb- noun format. e.g. the function of a light bulb would be " produce light " and of a spring would be to 'store energy", and so on . The definition of functions using this format is particulary important in that it forces the analyst to separate the various functions and to avoid the possibility of combining functions or describing more than one function at a time.

- The noun in the verb-noun format should be measurable or quanitifiable. This at a later stage will have its significance in two different applications, first it enables the function to be accurately evaluated (assigned a monetary value) and second it allows the appropriate alternative means, to satisfy the functions, to be developed. Table (3.33) shows examples of function definitions using verb-noun format.
- The definition of function should be as broad and objective as possible and not narrow , in order to avoid limiting the thinking for an alternatives.

E X A M P L E S :-

==========

The function of the Drill (drilling Operation) can be defined as follows:-

Drill	Hole	(Narrow definition)
C u t	Hole	(Narrow definition)
Produce	Hole	(Broad enough)

The third defintion allows alternative means to be sought such as Electrode Burning. Shearing Punch, Laser Beam , as Cast ..etc.

- All functions, of the item under study, have to be considered.

E X A M P L E S:-

==========

The function of an electrical connector can be defined as follows:

Connect Circuit

or

Connect Conductor

If that were the only function to be considered for further study then it could be achieved by soldering , welding or any other method of joining.

Other functions are equally necessary and have , therefore, to be considered in the same time such as :-

Facilitate disconnection

Locate contacts

Insulate contacts

For some functions, defining the funtion using verb-noun format is

not sufficient since it does not describe the conditions under which the function must be carried out. These conditions are usually contained in the drawigs and specifications, it cannot be incorporated in the verb-noun definition and therefore has to be listed separately and can be termed as contstraints .

E X A M P L E S :-

==========

Function of a cable is " Carry Current "

Constraints :-

- How much current
- Insulation requirement
- Temperature & Humidity
- Degree of flexibility , and so on .

It is therefore important to note that a complete function analysis cannot be carried out without the product specification which in turn must set out the Customer requirements.

(C) Classification of Functions

All functions which have been identified & defined can be classified into two catergories of functions,
A" Basic function " and a " Secondary Function ".
As mentioned earlier on , the Basic Function is what the overall product is designed for and this could be either a use function or an Esteem function or both . The secondary Functions are those functions which are performed by the individual product parts and which are essential to the achievement of the Basic Function of th proudct. The type and nature of these Secondary Functions depends on the particular means which are chosen to perform the basic function, i.e. Mechanical , Hydraulic·, Elec...etc., and therefore they may be related to the Basic Function .

Practically there can be two different products which will have the same Basic Function but with two different designs to achieve this function . In analysing the functions of each product individually it will be found that Secondary Functions in each Assembly are different.

The Product. Secondary Functions inturn can be classified further into Secondary - Essential Functions and Secodary -non essential

functions. Whilst the secondary essential functions directly support the achievement of the Basic Function, the Secondary non-essential Functions are those which do not contribute to the achievement of the Basic Function , and may or may not take place to accomplish the Basic Function of the Product.see Fig. (3.34) for general classification of functions.

In order to illustrate the interface between the different types of functions, an example is shown in Figs(3.35 a & þ) . The figure shows analysis of functions of an ordinary pencil and mechanical pencil (the two items are extracted from two different sources (42,43). As shown although the definition of the Basic Function is the same for the two items , the Secondary function are different, due to the adoption of two different approaches, i.e. different designs. It can be noted, also that the definitions of the functions performed is a matter of opinion.

In most cases, the definition of the Basic Function (s) is vital in the nalysis, and it is therefore advisable that the proper defintion should be sought. For this purpose a simple technique has been devised to help achieving proper defintion . I entails that when defining a Basic Function it is important to go up and down the levels of abstraction in the levels of abstraction to consider the most appropriate definition of the function in the contects of the overall requireents. To facilitate going up an down in the level the questions of why and how are asked respectively as follows :-

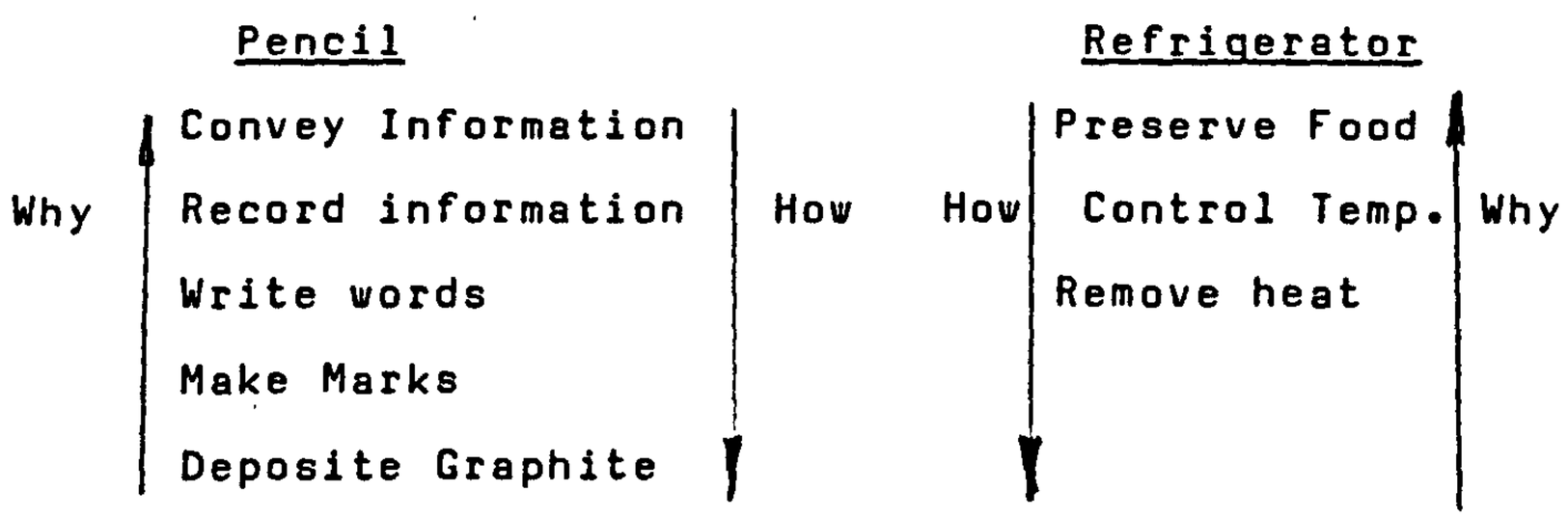

The most appropriate definition of the Function will depend on the particular application or industry. Taking the refrigerator as an example , for a manufacturer of domestic refrigerator for household application the appropriate Basic Function to consider would be to "Peserve Food " , Whilst for an industrial refrigerators manufacturer, for laboratories application and so on , the

appropriate Basic Function would be to " Control Temperature". Such definition of the Basic Function very much influence the development of the optimum means with which to accomplish the function . As a matter of fact,the lower the level of the function the more obvious and concise of the Function. But as one gets down in level , it limits the way with which the function can be achieved. Only practice and knowledge of the problem can help in this aspect.

When analysing a complex system a direct definition and classification of the basic and secondary function will be too complex and may not be meaningful. In this case it is advisable to break down the system into functional areas which inturn still can be divided into sub-functional areas an so on . Fig(3.36) shows typical function analysis of a motor car.This type of analysis provide a better understanding of the complete project.

(D) Functional Analysis System Technique (F.A.S.T.)Diagrams :-

Any project, product or otherwise, consists of more than just a single part can be considered a system having a number of basic functions, each one subordinate to another. Identifying the Basic functins of such a system is not in most case a straight forward task . For this purpose, value practitioners have devised a technique known as Function analysis system technique(F.A.S.T.)which aims to identify higher order and lower order basic functions and their interlationship, (20,58-60).

F.A.S.T. DIAGRAMS

It is a Diagraming Technique graphically displays the relationship of all functions performed by a product. It is similar to a pert chart but instead of being time orientated it is function orientated. see fig (3.37) , (3,38) and (3.39) for typical fast diagrams.

F.A.S.T. DIAGRAMS LAYOUT

The AST Diagram when finally constructed will cosist of the following parts:-

a- Critical path Functions

b- Supporting Path Functions

c- Scope of Problem understudy

a)The Critical Path is drawing in the middle of the diagram and it

contains in one link all the critical functions. These critical functions inturn represent the following :-

- The basic function (which are being performed by the end product).
- To the left of the Basic function Placed is a higher order function.
- To the right of the Basic Function placed, are those secondary essential functions which are dependent on, and directly influence the performance of the Basic Function .

b) All other secondary functions, which only support the achievement of the basic function and do not directly contribute to or influence the completion of this Basic Function, lies above and below the critical path. These supporting functions are linked together in certain manner to form the supporting path. This supporting path is linked to the critical path at the appropraite place. The supporting path functions are subordinate to the critical path functions and may or may not have to take place to accomplish the Basic function. the way to arrange the secondary path functions around the critical path varries according to the particular application .

Along both the critical path and the supporting path, functions are not placed according to their cronological order but according to their dependence and influence on each other.

(c) The scope of the problem under study can be determined by two vertical lines to the left and to the right of the diagram . The line drawn on the left should show the border between the basic function , to the immediate right of the line, and the higher order function , to the immediate le,t. The selected basic function in this case will depend on the scope of the problem and therefore is considered relative.

Extra features can be included and superimposed on the diagram , which may illustrate the problem more. For example underneath each function at both the critical path or the supporting path , the part of the component which is performing the function can be shown . Also at a later stage of the problem analysis, the cost of performing each individual fuction can be shown on the diagram .This step is discussed separately under Function Cost Analysis.

The Application & the use of FAST Diagram :-

The FAST Diagram are more applicable in Analysing the Function of a compelete system or a major portion of system, especially those which envolve mechanisms.

In this, it has more than one advantage, but mainly it envolves accuracy with the speed.

a) It shows the relationship & interlationship of all functions.

This inturn will help in more than one way.

- It helps in determining the specific basic function which is to be evaluated and eventually accomplished. This would be hard to identify and define without the schematic represntation of the function relationship.
- It shows clearly those unnecessary functions which are not related to either critical path functions or supporting path functions.
- It tests the validity of the function uderstudy.

b) It deepens the understanding of the problem to be solved as well as helps in outlining its scope.

- When costs allocated to every function the diagram hilights high cost areas where design changes should be considered.
- By allocating component parts to individual functions, it facilitates the elimination of aprts and the combination of several parts into one part to perform more than one function simultaneously.

c)It improves communications with envolved persons.

CONSTRUCTION OF THE FAST DIAGRAM

The construction of the FAST Diagram is achieved through logical procedure as follows :-

a) All the Functions which are performed by the parts of the system are to be listed and defined using verb-noun definitions.

b) The Functions are then arranged logically into a fast diagram following certain guide lines:-

a) Simple Systems

For a simple sytstem , constructing the fast diagram can start with the formation of the critical path using determination logic question why & how.

Going to the right of the Basic Function asking the question how will reveal and identify the nature of all the essential functions that take place and contribute to the achievement of the basic

Function. The sequence of the Functions can be Challenged by asking the question why going backward in the opposite direction .
Following the determination of the critical path , the associated supporting paths can be determined in a similar way which should be followed by linking the supporting path to the critical , in its right place. see Fig .(3.40)

b) Complex System

For more complex systems the determination of the critical path right-first-time may not be feasable due to the existence of large number of functions to be analysed. Therefore a different procedure may be adopted.

- Functions are devided into groups which inturn are studied indivdually to form function family trees. This , more or less eventually forms the supporting paths using determination logic questions.
- For each family of Functions, the highest basic function of the family is selected, and those selected functions are used to determine the critical path, again using logic determination .
- The supporting paths are linked to the critical paths in their appropriate position .

(E) OBJECTIVES AND USE OF FUNCTION ANALYSIS

The immediate results of applying Function Analysis is the Identification of the unnecessary Functions, which are currently performed by the product hardware, and in turn identifying those items, features operation which considered to be directly responsibe for the accomplishing of these unnecessary Fnctions.
The Value Engineeing Functional Approach does not , however, stop at the elimintion of the unnecessary items or features, it continues to developing alternative means with which to achieve the Basic as well as the necessary funcitons, reliably at more economical way. For this purpose other value techniques are employed such as : function cost analysis , Function evaluation, Creative analytical thinking , and so on each these is devoted to certain area of the problem .

3.5.2 FUNCTION COST ANALYSIS (43,44,61)

Following the product Function Analysis , the next logical step would be to develop an alternative means which will provide the Basic Functions , previously identified and defined, at lower, or minimum cost.

For maximum effectiveness , no further Analysis to the particular design problem should be made without indication of the relatively high cost areas i.e. those areas where cost has been excessively committed and recurred unnecessari y, (Poor Value Areas) .

For this particular purpose Value Engineering poineers and Practitioners have devised a new means with which to identify those areas, known to be " Function Cost Analysis".

"Function Cost Analysis "is a means by which the total production cost of a product, instead of being broken down and devided by subassemblies, components or parts, is alternatively allocated to major functional area and / or individual Functions which are currently performed by the product. The philosophy behind it is that it does not follow that the production cost of a product is justified because of the materials and methods actually employed, it is only when the Function performed is considered with the cost of providing it that a true value can be established.

"Function Cost Analysis" major objective is to give better understanding of the problem as it identifies the purpose of each element of Cost which , consequently , indicates the high cost functional areas where maximum return can be achieved by effective design changes.

For simple products, such as fountain pen, function cost analysis can be conducted using a simple table as shown in fig.(3.41)

From the figure the Analysis indicates that the Basic Function of the pen (make marks & store ink) are responsible for only 25% of its cost whilst the secondary function are responsible for 75% of the cost.

As a result, further study or Analysis by Value Engineers would have to be concentrated on poor value areas such as the body and the cap . It can be noticed that in this example the perfomred functions are easily related to their corresponding components, without having difficulties in finding which part is responsible for which function.

For more complex products funcional cost analysis, for some reasons, becomes more difficult and therefore alternative arangements becomes necessary. To start with , however, it may be expedient to consider overall functional areas for preliminary anlysis,allocate costs to each heading and use the results as basis for further analysis. A typicl example is shown in Fig (3.42) , A fuctional cost break down for an electrical control gear. From this analysis it is very likely that the greatest savings would be made by studying the design and the instruction of the case and the cover as well as the assembly method.

Function - Cost - Matrix

For more comprehensive analysis of product or subassmbly, a detailed part function cost analysis would be essential and enivitable . This type of analysis is based on the fact that whilst each component, item or part of a system contribute to a more than one function , also each function will have a number of parts contributing to its cost. It is therefore possible to estimate how much the cost of each part contributes to each function.

In practice this function - cost relationship is established by relating, and combinging in the same time, the traditional component cost analysis with the product function analysis. Specifically for this purpose, a well recognised tool has been developed and now is widely adopted by industry, this is known as Function - cost Matrix.

Using functions definitions, or verb-noun form , which is previously established, the function - cost matrix technique envolves a reconstruction of the cost informations, provided either by standard estimates or actual cost sheets, to assess what fraction of cost of each Sub-assembly or component is attributable to each function .

An example format of the Function- Cost Matrix is shown in Fig(3.43). With the aid of this Matrix the cost of providing every individual function is established , in a rough basis, to give indication of high cost functional area where further analysis and study is required.

The construction and the use of Function - Cost Matrix follow a logic procedure:-

- All of the product component parts are listed vertically.

- The various function , previously determined and defined are listed horizontaly.
- It is then possible to identify what part contributes, to which functions.
- The cost of each part is tabulated on the right hand side.
- The part cost is then subdivided between the various functions and each proportion of cost is inserted against the corresponding function. This particular process requires the knowledge and skill of Value Engineers, and incorporates individual detailed analysis.
- The total cost of each function is found by adding together the cost element in each vertical column. Each total is then converted to a percentage.
- A comparison and judgement are then used to decide if the cost of each function is considered high , reasonable or low. This forms the basis of further analysis.

On the basis of the results of Function - Cost Analysis , it is equally necessary, especially for those suspected functions, to analyse the functional heading in order to decide whether it is basic or secondary .Even further how basic and how secondary , " necessary or unnecessary and soon.

This type of analysis with the presence of cost may well provide suggestions for eliminating or combining parts contributing towards obvious secondary functions. Also an examination of a high cost basic functions may well provide a redesign proposal which would reduce the cost of the product.

Eventually, in order to judge whether the cost of providing a particular function is high or low, beside the experience and the skill, several methods are used as follows:-

- By comparing the cost of providing functions within the product itself.
- By comparing the function cost in one equipment with similar functions performed in another equipment, in the same Company .
- By comparing the fuction cost with the cost of providing the same function by the competitors products. This is achieved by estimating the cost of producing the competitors design in the Company workshop.

Figs(3.44 a,b&c) show examples of Function Cost Matrix for different products and how they influence product value improvement

. Figs (3.45), (3.46) shows function cost matrics for fuse box before and after analysis fig (3.47) shows comparisons between the two designs.

Application

The use of Function Cost Analysis has its application in various areas . Beside its main application in relation to product cost improvement, as discussed above , it has a similar application in a different potential areas where cost is of a paramount consideration.

In relation to product cost improvement function cost analysis has two main areas of application : Product at the product cost reduction at the product production stage and product cost control at the design and development stages of a new product.

For products in the production stage function - cost analysis provides a means with which to highlight high cost functional areas which would lead to improvement either from cost point of view or function point of view . Several examples has already been shown above.

Throughout the development stages of new product (from specification to manufacture) the use of function cost analysis enables the balance of Cost-to - Function provided to be regularly monitored, starting from the early stage of establishment of product specifications using rough cost estimates and continuously as the development proceeds, using increasingly accurate costs until the product approaches final design detailing stage.

Other than product cost improvement Function Cost Analysis can be applied to other important areas such as organisation cost, i.e. indirect cost of product manufacturing as well as the cost of running the Orgainsation . Fig (3.48) shows application of function Cost Snalysis to Department Cost. From the figures it is indicated that this type of analysis mainly provide a deep understanding of the Orgainsation areas under study .

The build up of this Analysis into a total company analysis assists to highlighting organisational inefficiencies, as it helps in several aspects as follows :-

- Identifies Multi-Department Functions
- Identifies Areas of Duplication and overlaps
- Enables the effect of each Function on the business as a whole to

be considered.

In conclusions, from the foregoing , Function Cost Analysis is a method of rearranging cost and function information into a form which is more easily understood and capable of producing action . This methods has its application in relation to product Cost Improvement as well as Organisation Cost Improvement.

Its major objective is to highlight high-cost areas where effort can result in maximum return.

3.5.3 FUNCTION EVALUATION (20,57,62)

(It can be said almost without fear of contradiction, that if there is no comparison , there is no evaluation).L.D.Miles (31).

A) Evaluation by Comparison

This type of evaluation is based on creative thinking and knowledge of Cost . Within this process of " function evaluation by Comparison" one attempts to establish the minimum cost of providing the identified fuction , using a better alternative means.

Against the particular Identified Functions, several alternative means which can accomplish this Function are developed using creative thinking with knowledge and experience. These alternatives are then evaluated from the cost point of view using past experience in cost and available cost data. The minimum cost figure of a developed idea is used as the Basis of establishing the Function Value.In establishing the alternative means to provide the Function every idea is constructively developed before it is judged. In assigning a cost figure to each idea, only approximate cost is used since the final figure is merely used as a guide.

In addition to indicating what ought to be paid to meet the Basic Function , the assessment of function worth using this method often leads to suggestions for alternative approach to the job. Several similar rational approaches have been developed to evaluate the fuctions of single parts, sub assemblies and complex assemblies.

Main contribution was made by Miles (20) and Hugging (57).

In evaluating single part fuctions, Miles suggested certain logical steps as outlined in Fig (3.49).

Fig. (3.50) shows an example for the application of this approach; Function evaluation of a steel spacer stud. it can be seen from the example that the suggested alternative means to provide each

defined function may not be practical when it comes to actual use. They do however provide a useful guide when it comes to cost evaluation. The Total Value of the spacer function is the summation of the individual Functions Value , (20,24).

For the same item (the Steel Spacer Stud), in order to develope an alternative means with which to provide the identified Function and which would meet the predetermined Value (1C) another Value Approach are used known as (Blast , Create, Refine) which has been discussed previously, fig.(3.50) shows the application of this technique to arrive at a Value Alternative.

Fig. (3.51) shows another example given by Miles as an application of his approach; A Function Evaluation of a ventilation screen, of electric,motor. In this example the build-up to achieve the total value of the provided function has more or less followed a logical practical sequence. The suggested alternative means used as a guide for evaluation were eventually implemented and used as a practical solution.

Also, in the same example, the functions provided by the item are considered to be interacting . This affects the final value figure, which should not be taken as direct summation of the Values of the individual Functions.

For Sub assemblies, Functions Evaluation is basically the same as for single parts, with minor modifications to the technique.

In this case it is necessary first to determine what to evaluate. For this, it has been agreed and established that only the Basic Function of the Subassembly that has Value and accordingly should be evaluated . This assumption forces anyone to search for a new simpler design that will accomplish the Basic Function with the minimum number of Secondary Functions.

For this purpose the following steps are suggested by Huggins(57):-

- The Subassemblies Function have to be analysed and classified to determine the Basic and Secondary Functions.
- Considering the Basic Function , alternative ideas are suggested and developed which should accomplish the Function reliably and more economicaly.
- Each idea are evaluated by estimating the cost of providing it, approximately.
- The lowest cost idea that work will provide the Value of the

Basic function, and accordingly of the Subassembly.
Fig. (3.52) shows example of this method, Function Evaluation of Coil Support Assembly .
The larger and more complicated the Subassembly undergoing analysis, the greater the number of comparisons necessary to make the analysis sufficiently comprehensive to establish the best value for each included function. This means analysing a series of Basic Functions, each discovered by breaking the assembly down into sub units, components and parts. In this way the problem becomes perhaps one of comparig the use of material with that of another, the style of one part with that of equivalent, the application of one process of manufacture with that of another, an so on. For example it may be a matter of comparing metal with plastics, screw-machined parts with lather-machined equivalents, or stamping with spinning to determine how the needed function can be obtained reliably at the lowest cost . (20).
For complex assemblies, Function Evaluation can be carried out by first dividing the assembly into major functional areas and then carry out the evaluaion process to its area in the same manner as discussed before . Fig(3.53) reviews the overall rational procedure suggested by Huggins.

B) Theoritcal Evaluation of the Function (Using Available Data) :-
This type of Evaluation is carried out through the derivation of certain universal formulas. A precise Value is placed on Function by using appropriate mathematical relationships.
This method, however only applies to measureable parameters Functions such as ' Generate heat " , " Resist Bending " ..etc. For this,available technical as well as Cost Data can be used.

Data such as :

Function / Property

Property / Material

Material / Cost

Can be used to establish Function / Cost.

E X A M P L E :-

The Function"Conduct Current " can be evaluated using the following

data:-

Current (Amp) / Conductivity

Conductivity / Copper

C o p p e r / £

This relations can be used to determine Amps/£ which represent the value of the " Conduct Current " function .
In the absence of the relevant Data a Theoritical Evaluation can be conducted using Mathematical Formulas.

C) Numerical Evaluation of Functional Relationship :

This method merely aids establishing the relative importance of each Function in relation to other function being accomplished by a product . i.e. it helps in estbalishing the interlationship and the balance among all functions, thus verifying the Basic function of the product being studied as well as determining the descending order of importance of the second degree functions.
To illustrate this method an example is used, nmumerical evaluation of functional relationship of a connector (62) , fig (3.54a).
Before the commencement of the actual method of Evaluation detailed fact must have been accomplished which should include an understanding of both the User's and the Producer's Specifications and requirements.
The first step in Evaluation is the completion of the Functions worksheet Fig.(3.54B) . Secondly , the Basic Functions of the product, as noted in the Functional sheet, are then listed in another sheet known as the " Evaluation Summery " and given a key letter. Fig(3.54 c).
Subsequently, the evaluation process can be undertaken by completing the "Numerical Evaluation " Sheet fig .(3.54 d).This is done by comparing one function to only one other Function at a time and determining which is of the greater importance as well as the magnitude of the difference in importance. If the analyst has compiled all the pertinant data a knowledgeable decision can be made. When the decision has been made, the Key Letter corresponding to the Function having the greatest importance is placed in the appropriate Block Fig.(3.54d).Together with that Key Letter a number is placed which denotes the extent of the magnitude of the difference in importance ; 1, indicates minor difference , 2 demium

difference and 3 a major difference.
the comparisons of every function to all other are continued until the sheet is completed.
The weight factors of each Key Letter are then totalled and placed in the weight column in the " Evalation Summery " Sheet .
Fig(3.54c).
From the data compiled, a final summation can be made which involves. reconfirming of the Basic Function , by assessing which function has the greatest total weight factor, as well as the descending order of the second degree Functions.The relation of function can be shown graphically by ploting the weight factor of each function in a graph, fig(3.54c).
This particular analysis when completed it influences changes to be made without affecting the reliability while reducing the total cost. In this particular example it was concluded from the Analysis that the necessity of the Function"Provide Seal" was in reality an " Honest wrong relief" and could be eliminated. This was resulted in the elimination of the last two special parts from the Assembly (62).
Fig(3.55) show example of Numerical Evaluation of Function Relationship of "Roof Exhaust fan Wheel ".

3.6 ADDITIONAL TOOLS FOR VALUE ENGINEERING

In addition to the Value Engineering well recognised techniques which have already been discused insections (3.4) and (3.5) other technical tools was introduced , subsequent to the establishment of the technique, to help value engineering making the right value decisions.
Some of these tools are listed below and discussed under Clauses(3.6.1)to(3.6.4).

- Value control design guide.
- Decision matrix
- Check Lists
- General information for value engineers.

3.6.1 VALUE CONTROL DESIGN GUIDE (63-66) :-

The problem of selecting a suitable economic manufacturing methods to produce a particular componenet of a given design, was reliesed

by value poineers.
for this, Value Analysis incorporated U.S.A. have made an attempt to develope a practical solution to solve this problem radically. As a result of making a detailed analysis of the various Basic shapes inherent in most components and the characteristics and costs of the different manufacturing methods by which they can be produced, it has created a designers guide to best production method. This was called value control design guide.
It reduces all possible shapes for metal parts to eight catergories as shown in Figs.(3.56) & (3.57) then classifies and compares basic manufacturing processes suited to production of each shape.
In the comparison it indicates characteristics of each process, tolerances attainable and batch quantities for which it is best suited and relative cost interms of tooling, labour and material utilisation .
With this design guide the long search for the suitable process is believed to have been overcome. Inappropriate processes are eliminated by refering to the table keyed to the relevent form category . For example if the component is similar to those illustrated under "Solid Concentric Shapes ", then reference is made to the table giving the possible process methods for manufacturing such items. This is studied in conjunction with process comparison tables.see tables (3.58)&(3.59).
All applicable processes are rated from the table matrix, starting from the production quantity columns.
The optimum process will normally be indicated as that which gives the lowest average matrix markings according to quantity , labour waster material and tooling.
To help value engineers and designers use the guide, a simple step by-step procedure was developed to speed up the selection of the right process. This includes selecting the proper shape, examining all the possibilities , eliminating inappropriate processes, rating the applicable processes .nd comparing alternative processes until an optimum one is arrived at.

3.6.2 DECISION MATRIX (56,67)

The decision matrix is one of the tools that helps the value engineers to decide upon choosing an alternative design for the

given function .It serves as an alogorithm for precise comparison .

How it works:-

(1) It helps in analysing the functions task or objective of a product by breaking it down into requirements.

(2) Once these requirements are determined, an algorithm aligns them with their relative importance.

(3) The algorithm provides a framework for evaluating various course of choice.

As a result of using the decision matrix either of the following is established:-

(i) Best combination for given resources

(ii) Least resources for a given combination.

To explain the decision matrix in detail , an example considered.

E X A M P L E

==========

A' Complex wave-guide structure' wanted.

The competitive requirements for the structure were:-

1. Smoothness of surface finish
2. Economy of Production
3. Dimensional accuracy
4. Lightness of weight

The alternative designs suggested (choices) were:-

1. Standard wave-guide components special joints
2. formed and punched aluminium Sheet dip or oven brazed
3. Eectroformed on fixtured mandrells
4. Formed and punched alum. , sheet , electron beam welded
5. Investment and die-cast components brazed together.

Table (3.60) shows the shape of the decision matrix for the above problem .

From the matrix:

B1 , B2 , ...Bn

are the benefits or requirements or the characteristics of the desired item or product.

C1, C2....

are the choices or alternative solutions which are suggested to fulfill the desired requirements (B1..Bn)

W1, W2...Wn

are the relative importance of each particular benefit with respect to all others. These values of relative importance are called the weighting factors or (Weightings).

e11, e12...emn

are the degrees of efficiencies offered by the choices or how much this particular choice can contribute to the relative benfit (Requirement).

V1,V2..Vn

are the total values given to each choice according to its efficiency and its contribution to all the requirements combined together.

Weightings

As from the definition , the weightings are the relative importance of each requirement in respect to the others.

For the use in the matrix the sum of the weightings must be equal to unity, so the value of each weighting will be a fraction of one, and it all depends on the importance of each individual requirement to the customer.

When the designer or the value engineer is familiar with the product and the customer requirements , he can usually immediately assign numbers to the weighting factors. From the figure , one can see that the ' dimensional accuracy' is the requirement with the highest weighting factor as it is more important to the customer than the other three requirements.

Efficiencies

The efficiency of a choice or an alternative is in fact ' how far this alternative can do to a particualr benefit or requirement.

"Numerical numbers can be assigned to these efficiencies by using special charts. Figure(3.61) shows the chart used to obtain the efficiencies by which the different alternative contribute to the first requirement, i.e. ' smoothness of surface finish '.

How to obtain this chart ?

The horizontal axis represents the range of choice for his particular requirement . Each of the requirements offers a range of choice between a lower and upper limit of demand, the lower limit is considered the ' least favourable'or ' the worst acceptable ' and the upper limit is considered the ' best practical condition '

or the ' best available ' . To determine accurately this range of choice, one has to know. What the customer wants from a specific product or what characteristics or properties which this item or product should possess in order to satisfy te customer's need. From the figure, the range of choice for the first requirement is 8 to 64 micro inches. This means that the smoothness of surface finish should not be worse than 64 micro inches, which is considered the lower acceptable limit or otherwise the product will lose its significant value. Also it means that it does not need to be better than 8 micro inches as it is not wanted and may cost too much or take too long to obtain.

The verical axis represents a standard scale (70-90) since that the units used for each individual requirement are di,fernet from the other requirement units ,and that all these untis cannot be mixed together to be dealt with in the decision matrix, each individual requirement unit has to be converted into a commensurable unit by using a standard scale , this allows customers needs to be interpreted interms of numbers.

The number " 10" corresponds to the lower accceptable limit and the "90" corresponds to the upper best availabe limit.

The straight line represents the customer utility function for the product, this utility function, however , can be linear or non linear, it depends on the characteristics of the product. To determine this function a raw data of the product and product characteristics must be provided.

The efficiency of any alternative can be obtained directly from the vertical standard scale as it is shown on the figure . By using this chart, the requiremtns are believed to have been normalized and adjusted. Fig.(3.62a,b) shows similar charts used for normalising the other requirements.

Total Value

The Total Value for each alternative is calculated directly from the matrix . Each individual efficiency is multiplied by its corresponding weighting factor and the product is indicated on the right hand corner of each square as is shown in the matrix table (3.60) the products are added horizontally and the sum is the total value for each alternative.

Selected Design

The alternative design which possesses the highest value is the one to be selected to be used for the desired function .

Make or buy decision

Table (3.63) shows a similar decision matrix used to decide upon whether the selected alternative is made - in or bought out.

3.6.3 VALUE ENGINEERING CHECK LISTS

This is one of the well known tools used by value engineering, designers and others. Numerous check lists have been developed by value poineers to cover different aspects related to specification review, design criteria & evaluation, design analysis, material analysis, design for manufacture, operation analysis, inspection requirements, material handling , new product develoment .. etc.(68-69).

Samples of typical check lists are given in appendix (I).

3.6.4 GENERAL INFORMATION FOR VALUE ENGINEERS & DESIGNERS

Several types of cost information was compiled to help value engineers selecting economical materials and economcal manufacturing process, to produce components of given design . However, because of price variations and continous rise of manufacturing costs, most of the information reflect the relative costs of materials & processess rather than actual costs. Samples of typical cost information available to value engineers are given in figs (3.64-3.68) and tables (3.69-3.71)

3.7 PRELIMINARY ASSESSMENT OF VALUE ENGINEERING TECHNIQUES

As a result of this survey the following can be initially concluded:-

(a) Value analysis basically is a purchasing techniques that originally introdiced in 1945 to satisfy an emerging need of establishing a " rational approach to product cost saving ". Subsequently the technique of value engineering developed in the form of " functional approach to problem solving " which had many applications in relation to product engineering and manufacturing .

(b)The survey , however, have showed that, in most cases the value engineering functional approach is applied in relation to product cost reduction. In so doing value poineers have realised many facts , the most important of which is the relationship between the product manufacturing cost and the product design. On this basis value techniques have been developed to identify high cost areas in relation to product design and the means with which to achieve a better value solutions by considering different ways of accomplishing the function of the subassembly under consideration .

(c) There is no evidence from the survey to prove that the same developed value rules and techniques can be applied to products at the design stage and how. People who poineered value engineering have not given enough consideration to the implication of the manufacturing process in relation to component design. i.e. have not paid enough attention to the design / manufacture/ cost interface at component design level.

(d) In relation to the proposed design for economic manufacture concept , one can assume that the concpet in its present form can only represent part of the greator concept of value engineering .

In its developed form however, D.E.M. technology can be usefull tool not only to designers but also to value engineers.
Onthe basis of this preliminary findings it was decided to develope the investigation further in industry . This is discussed fully in chapter (4).

OUTLINE OF VALUE ENGINEERING TECHNIQUES

1. *Work on Specifics—not Generalities*

Value Engineering has its very basis in specifics. Define the problem—single out certain areas; clean them up systematically.

2. *Use the Value Engineering Job Plan*

All jobs can be broken down into simple steps and any job is better carried out by a planned program one step at a time.

3. *Get "All" the Facts*

This is a realistic hard-boiled job—costs, inventory, usage, specs, development history, etc. We find that in half the cases when all the facts are supposed to be in, they're not! We find that unless we get more facts than anyone else has, we miss untold opportunities. You can't work without all the facts. When you don't have facts you are using personal opinion. Get all of them. Many times a problem solves itself when you get all the facts. You can't work on a basis of opinion.

4. *Put a Dollar Sign On Each Main Idea*

Know how much your ideas are worth. Never try to evaluate them until you have some idea of the possible dividends in return for your invested time.

5. *Know The Cost in Detail*

Know the cost of every part and operation. We can't determine value without good cost figures. It's surprising how little is known about cost.

6. *Get all Your Information From The Best Sources*

Get all your information from the best sources—not just the normal source—not the one that we are in the habit of using—but the *best* sources.

7. *Determine Each Function*

Evaluate each function, that is divide the product into functional areas, relate the cost of each area to the function it performs. Think clearly with regard to function and ask yourself these questions:

1. What is the item?
2. What does it do?
3. What does it cost?

8. *Evaluate the Design or Functional Area by Comparison*

Enrich the present problem by drawing from a different field. Whether or not a design represents good value can be determined by using this technique. Compare with a commercial item performing the same function. Compare the object with a toy—toy makers have to be low cost. In many cases lower cost methods or principles will be discovered. Continue with the basic questions of Value Engineering:

1. What else will do the job?
2. What will that cost?

9. *Bring New Information Into Each Functional Area*

Bring new information into each functional area by using specialists. Not only specialists within your organizations, but draw on the huge technical resources of other industries. If it is a fastening problem, consult an application engineer or a company which specializes in fastenings. If it is a question of material or process, get in touch with a company which is out in front in producing or applying the material or using the process. Try to keep ahead of everyone in new technical developments which promise equal or better performance at less cost. This is one of your strongest weapons in obtaining better value.

10. *Use Your Own Judgment*

If you don't think it's right, it probably isn't—do something about it! After properly getting the facts, you know more about it than anybody else. Do something about it.

11. *Use the Creative Approach*

Turn off the judicial part of the mind; allow no negative thoughts, really concentrate on creating ideas as to how a function can be performed.

12. *Blast!*

Try to take out one-half the cost from most functional areas and nine-tenths the cost from some components. By so doing you will be forced into new areas—areas that have not been previously explored. Consequently, you many find it easier to remove 50% or 90% of the cost than to remove the customary 5% to 10%.

13. *Use Standards*

Search out applicable standards—use commercial standard items when possible. There are thousands of plans in file where special bolts are detailed—a little redesign might allow the use of a bolt out of a stock bin—at 25% of the cost of a special bolt.

14. *Consult Specialty Vendors*

Use specialty products, materials and processes. Use them in the determination of prices. Put vendors engineers on your team.

15. *Use The Techniques of Good Human Relations*

Frequently, this is half the problem. Don't argue. Give people time to change—never appease. Deal properly but not weakly. Bring your discussions to the point quickly and courteously. Treat all people with dignity. Give credit where due. If you must fight—fight willingly but on your own level.

16. *Identify and Overcome Roadblocks*

Don't be stopped by shadows. If a roadblock occurs, define it as clearly and as sharply as possible and then set about to overcome it.

---

17. *Spend The Navy's Money As You Would Your Own*

Everything we do is committing our country's money. Commit the Navy's money, exactly the way you would your own. You would be surprised how easy that makes decisions. We don't advocate violating policies but policies are man-made to govern the mass of decisions that must be made daily. They are supposed to be man-changed whenever the Navy's interest benefits. Ask yourself these questions—what would I do if it were my money or if it were my money would I be willing to pay that much for it?

18. *Act, But Be Brief!*

Get your thoughts on paper—your only product. Your recommendations will be reviewed by busy men. They must be factual and highly refined staff work—a presentation which permits decision by the technically responsible authority.

DENDUM(1) :VALUE ENGINEERING TECHNIQUES AS OUTLINED BY THE BEREAU OF SHIPS -REF (28)

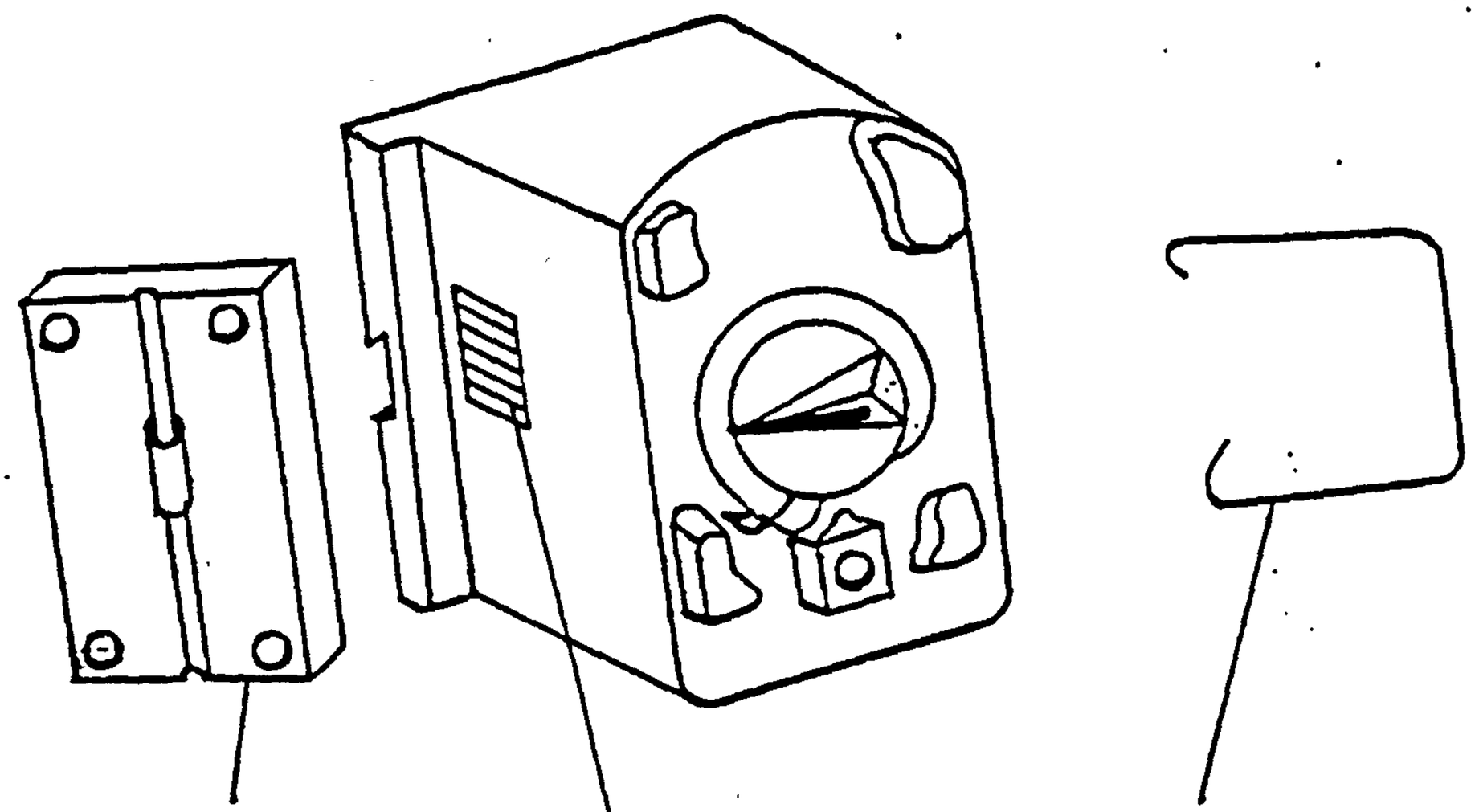

THE COVER WAS MADE OUT OF METAL MAINLY TO KEEP EXTANEOUS MATERIALS OUT OF THE SMALL MECHANISM.HOWEVER IT WAS FOUND THAT THE ACTIVE CONTROL IS MOUNTED INSIDE ANOTHER ENCLOSUSRE . IN THE NEW DESIGN THE METAL COVER WAS REPLACED BY A LAMINATED PLASTIC WHICH HAVE REDUCED THE COST FROM $ 40.000 TO $ 15.000 A YEAR

A WIRE CLIP WHICH HELD THE COVER ,MADE OF PHOSPHOR BRONZE.THIS MATERIAL IS USUALLY USED WHEN A PART HAS TO FLEX MILLION TIMES HOWEVER, IT WAS FOUND THAT THE CLIP IS USED WHEN THE COVER IS REMOVED FOR SERVICING -AN AVERAGE OF SIX TIMES A LIFE. THE MATERIAL CHANGED TO SPRING BRASS AND THE COST WAS REDUCED FROM $ 7,000 TO $ 3,000 A YEAR

"G.E" LABEL .IT WAS THERE AS PART OF TOTAL MANAGEMENT POLICY , AS EVERY PART TO THE PUBLIC-WHEN INVESTIGATED, IT WAS FOUND THAT IT IS ONLY THE SERVICE ENGINEER WHO WOULD HAVE THE CHANCE OF SEEING THIS BADGE. IN THE NEW DESIGN THE BADGE WAS CALLED OFF AND ITS COST WAS SAVED.

FIG.(3·1) TEMPERATURE CONTROL DEVICE .

TESTS FOR VALUE

Our Challenge—Our Obligation

Every material, every part, every operation must pass these tests

★ ★ ★

1. Does its use contribute Value?
2. Is its cost proportionate to its usefulness?
3. Does it need all of its features?
4. Is there anything better for the intended use?
5. Can a usable part be made by a lower cost method?
6. Can a standard product be found which will be usable?
7. Is it made on proper tooling—considering quantities used?
8. Do material, reasonable labor, overhead and profit total its cost?
9. Will another dependable supplier provide it for less?
10. Is anyone buying it for less?

Value Analysis Services

GENERAL ELECTRIC

General Electric's famous "Tests for Value" have been standard in the field of Value Analysis for several years.

FIG.(3·2) TEN TESTS FOR VALUE OF GENERAL ELECTRIC .

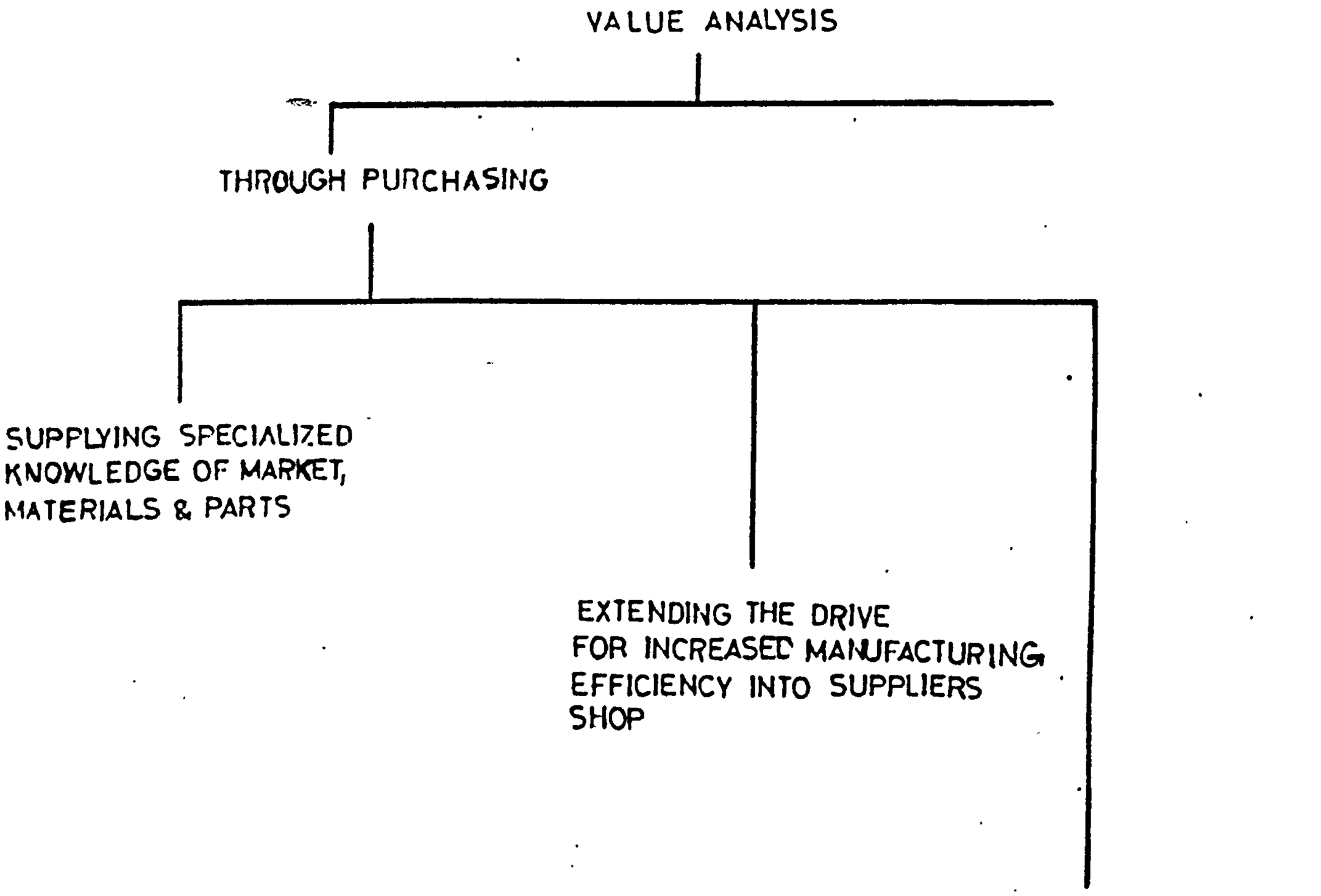

FIG.(3·3) THE ROLE OF PURCHASING IN THE VALUE ANALYSIS PROGRAM AS ADVISED BY MILES - REF (23).

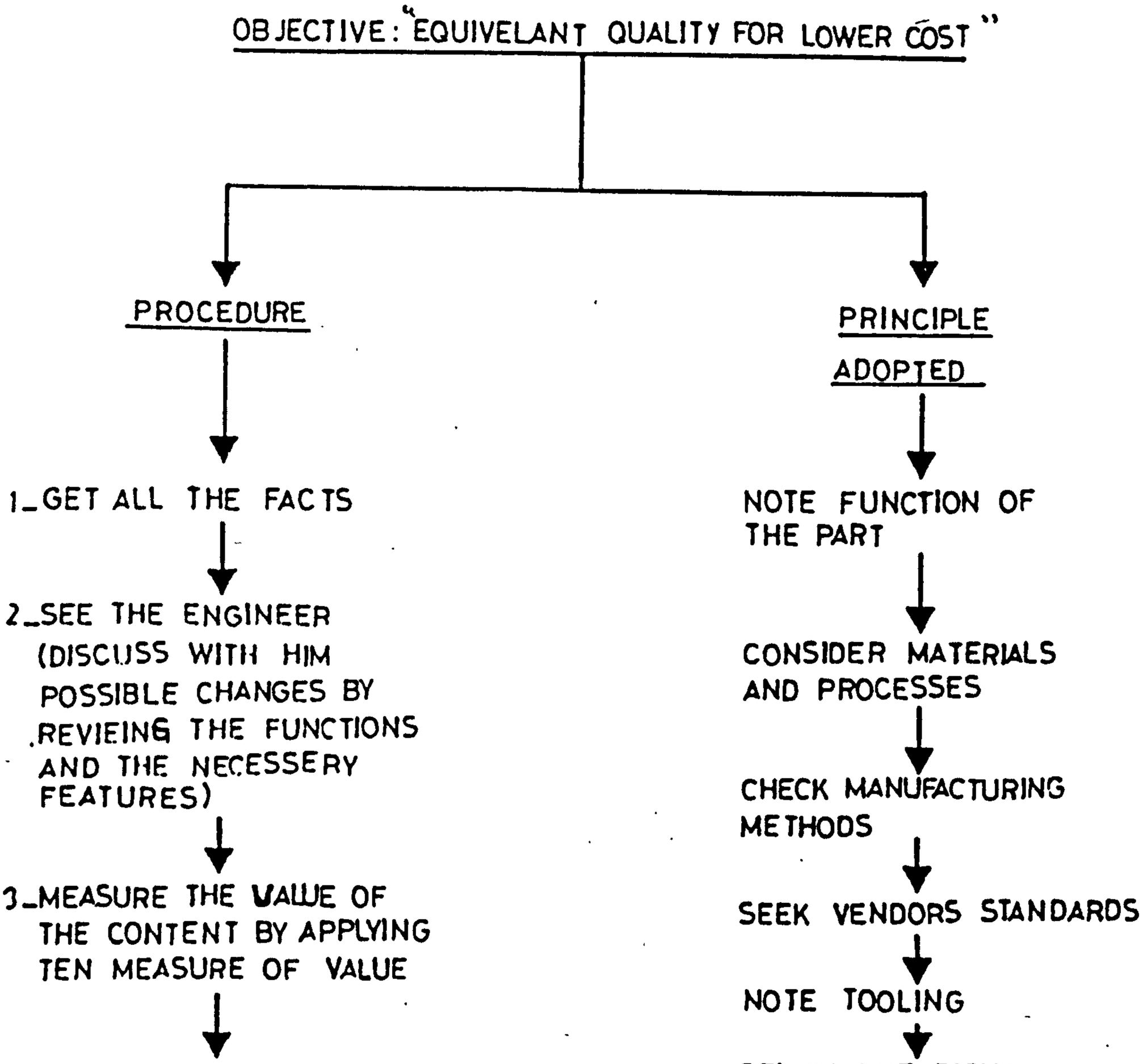

FIG.(3.4) THE USE OF VALUE ANALYSIS TO ANALYSE EXISTING PRODUCTS (MILES FIRST REPORT IN V.A.-AMERICAN MACHINIST 1949-(23)).

FIG(3.5-3.7 REPORTED V.E. CASE STUDIES MILES REF(23)

SPECIAL SUPPLIERS Enable Low Costs on Small Lots
High tool charges often preven. the applicatinn of low-cot manufacturing methods to small-lot ,low-quantity prodution. Yet, there are suppliers with special equipment that enables them to do this class of work with low charges for tooling.Parts below illustrate what can be done through specialty stamping shops.

FIG(3.5)

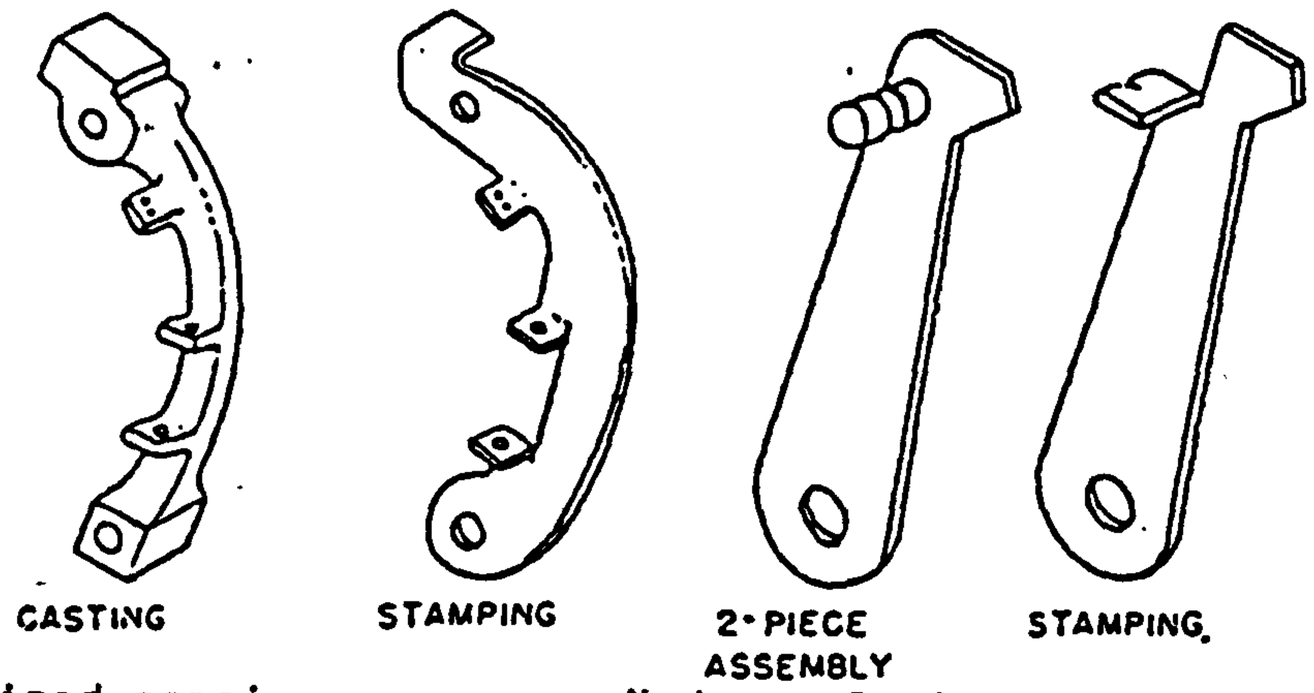

As casting, part required consierable machining and cost $ 1.76. Part, as stamping, costs 25¢.Tool charge was $100.

Made as 2-piece assembly, pawl cost $1.Changed to stamping,cost is now (¢.Tool charge at specialty shop was $50.

SUPPLIERS HELP
IN SOLVING PROBLEMS

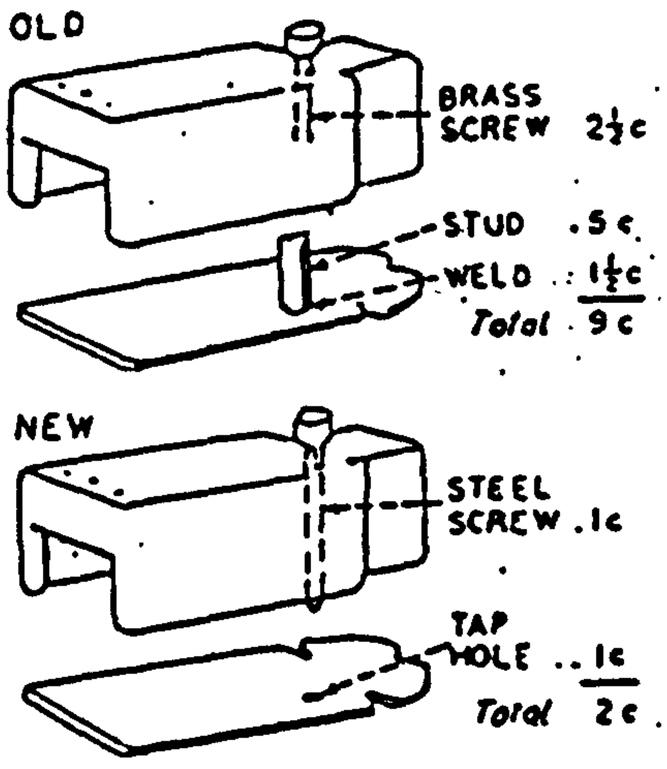

FIG.(3·6)

Does its use
contribute to value?

In the assembly at top a brass thumb screw and screw machine part held the cover to the base.The stud,tapped on one end to receive the screw,was welded to the base.In new assembly the same purpose is accomplished by using a plated steel screw long enough to engage a tapped hole in the base and the stud is climinated.Thus ,the stud made no contribution to the value of the product.

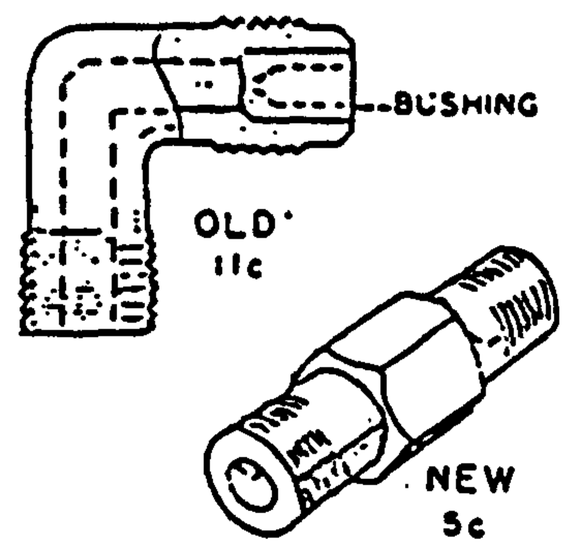

FIG.(3·7)

Conferences with suppliers often turn up helpful suggestion for greater value.For example,fitting originall was an elbow, made of 2 pieces at a cost of 11¢ .First attemto was to made the part in one piece, but cost then went to 12¢.Next,value analyst and supplier set 5¢ as their bogey and found that only way to meet bogey was to make part straight. Investigation showed that bend readily could be made in part, to less jobs have been improved through the planned conference method.

Before

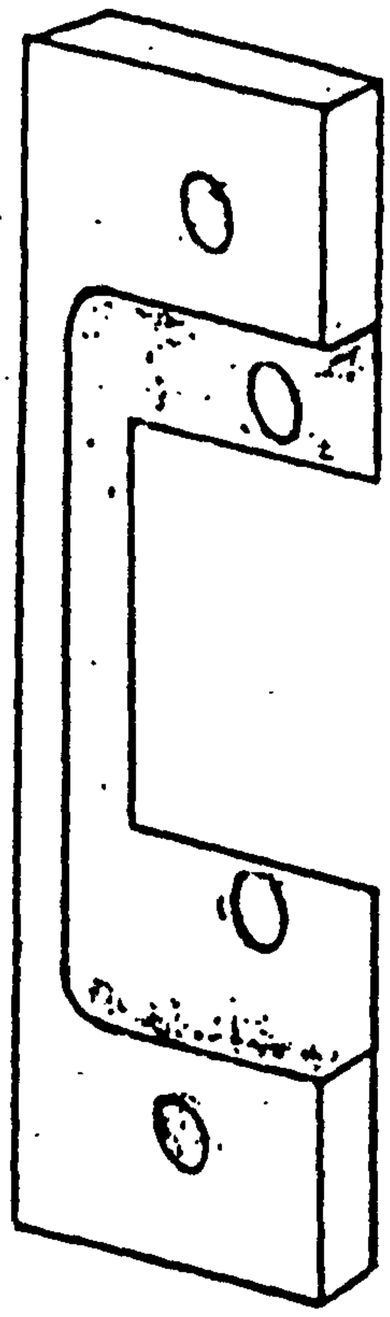

FIG.(3·8)Connector Plate.

A special machined plate was used to support and position a spring loaded miniature electrical connector.The part was machined from aluminium bar stock to close tolerances and sur face finish .After examining various means of fabrication in relation to the basic function,Philco changed the design to a stamping which proved to be the most economical.A cost reduction of 60 per cent resulted.

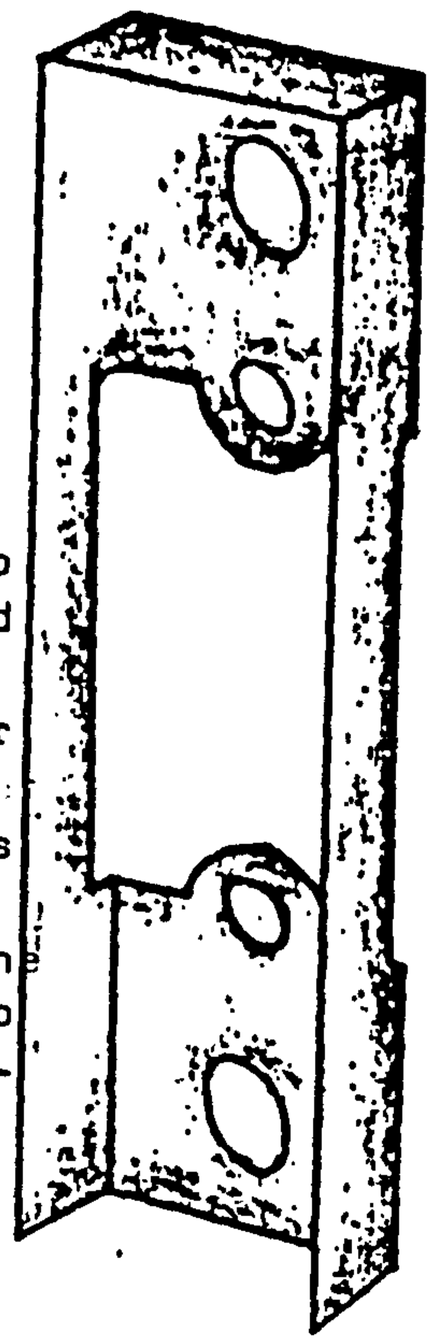

After

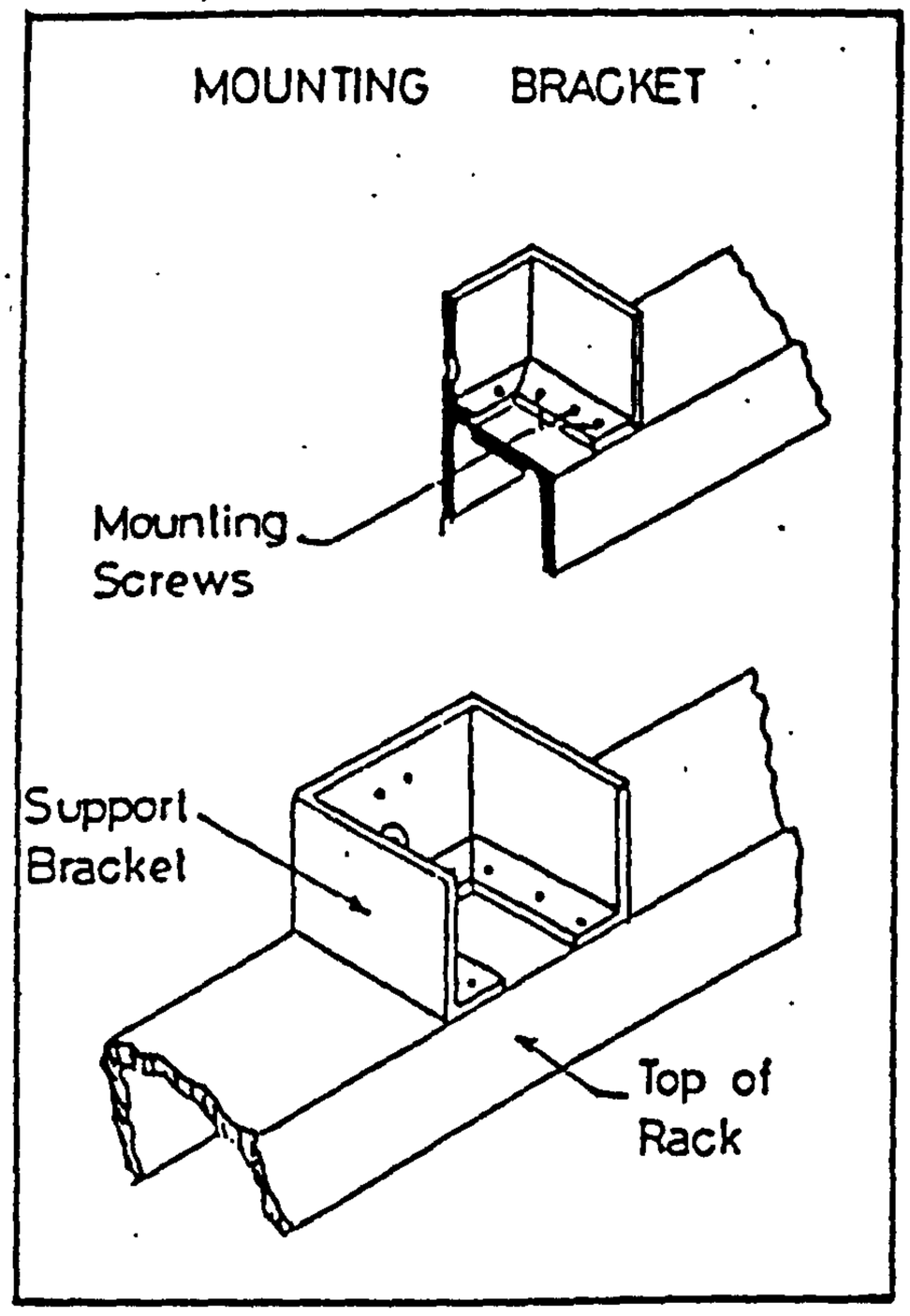

Before

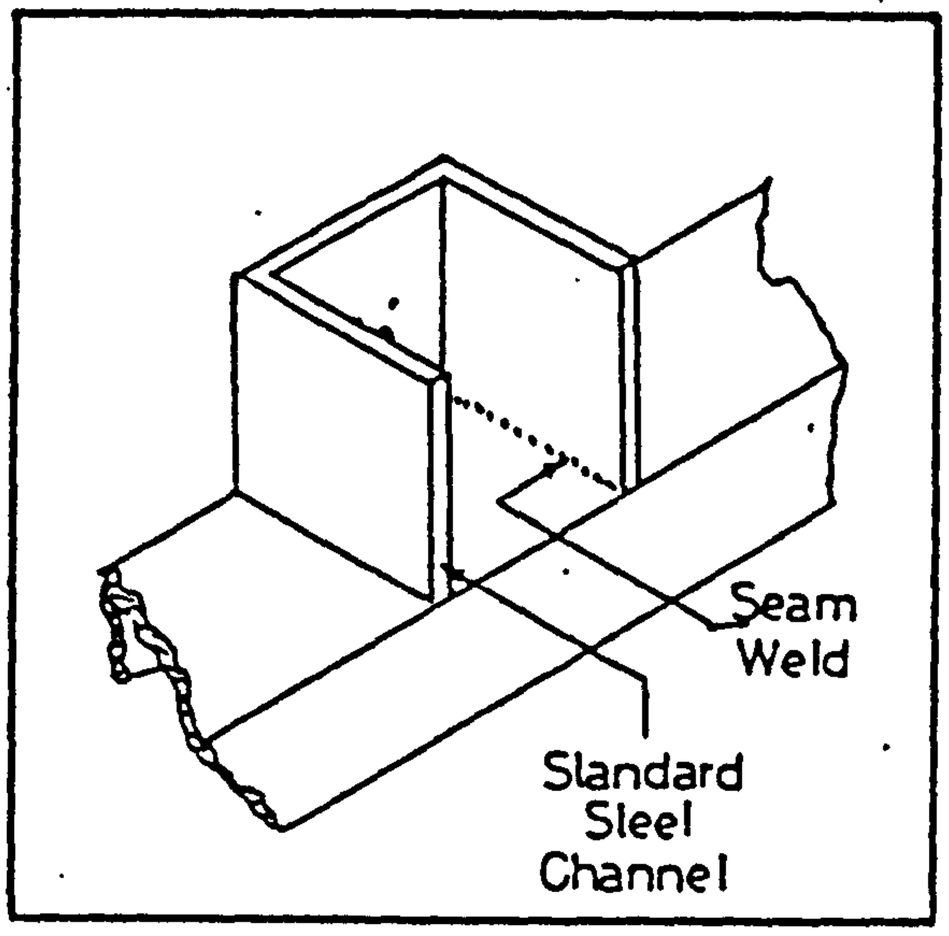

After

FIG.(3·9) Waveguide Bracket .

A special formed waveguide bracket was replaced by standard steel ch~nned. The original part required four blankigg and forming operations.It was then fastened to the top of a rack with nine screw requiring drilled and tapped holes in the rack,plus hardware.Philco's value engineers replaced this by a section of standard stell channel, which was seam welded to the top of the rack .Unit cost reduction 55per cent.

FIG.(3·8)(3·9) REPORTED V.E. CASE STUDIES - REF (30) .

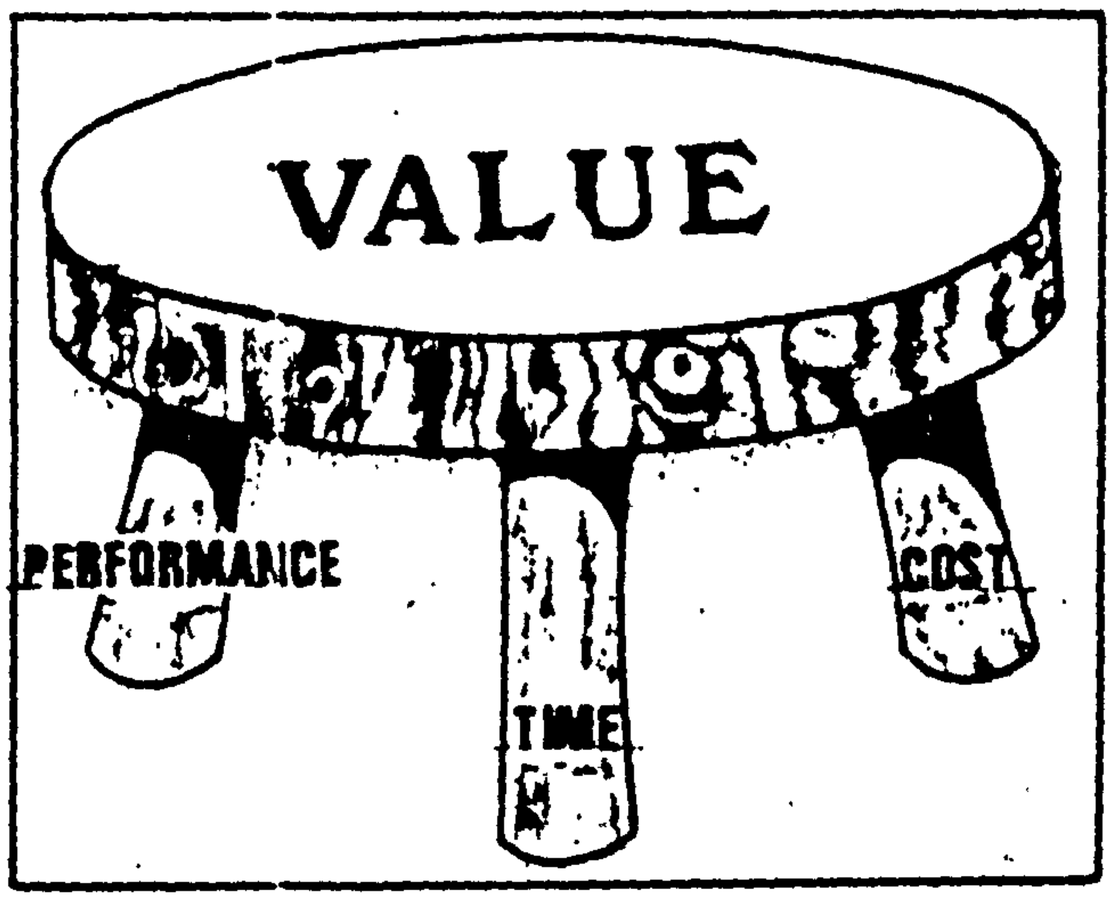

THE MILKING STOOL

FIG.(3·10) PARAMETERS OF VALUE AS ASSUMED BY CRUM , REF (30) .

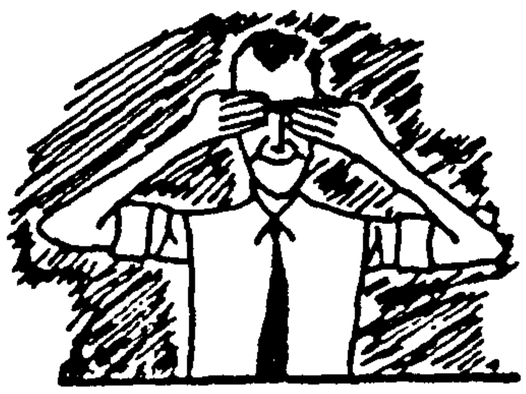

See no value

Hear no value

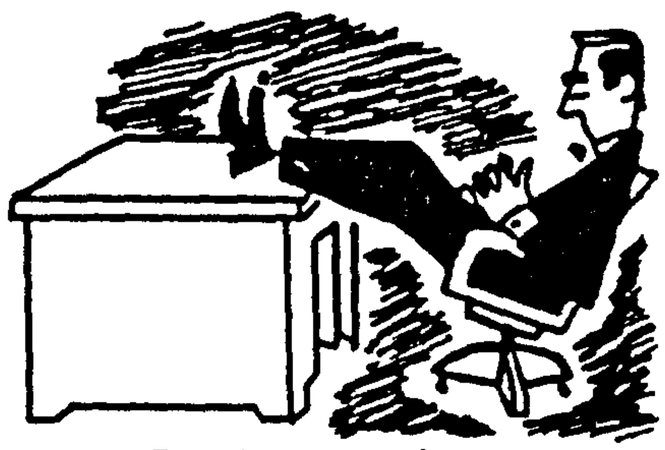

Seek no value

Are These Attitudes Stalling Your Search for Value?

- It wont work
- Yes....But we're different
- Its the best design
- You cant take out any more cost
- We always made it that way
- We cant rely on anyone else
- Lower cost means lower quality
- Why change it? It works
- We tried that 20 years ago
- We know more about it than anyone
- Why should we stick our necks out?

FIG.(3·11) THE HABITS AND ATTITUDES OF PEOPLE ARE THE MAIN REASONS FOR POOR VALUE - REF (37).

FIG(3-12) **COST ANALYSIS TECHNIQUES** -REF (52) (SAMPLE)

Assembly or Part Number 21321 Assembly or Part Name Casting Assembly Function Support Wing

Labor Rate/Direct Labor Hr. Varies by Operator Overhead Rate/Direct Labor Hr. Varies by Dept

		Cost Elements							Cost/Unit		Cost per Year	Cost per lb.	Cost per dimension	Co pr ty pr
			Labor			Material								
Item	Operation	Lot Size	set up time	Run time	Labor $	Raw $	Purch. parts $	OHD $	Incremental	Cumulative	qty 1,000	wt. #10	dim.	
1 Total		250	.82	.88	1.70	1.30	.20	2.80		$11.00	$11,000			
2 R.M. (Iron)						1.25			1.25		1,250	.12½		
3	Sand Cast.		.20	.30	.50	-	-	2.25	2.75		2,250	.27½		
4 Raw Part										4.00	4,000	.40		
5	Machine Casting		.55	.20	.75	-	-	4.25	5.00		5,000	$.62½		
6 Mach'd Castg.										9.00	9,000	$1.12½		
7	Paint Castg		.05	.20	.25	.05	-	.70	1.00		1,000			
8 Finished Castg										10.00	10,000	1.25		
9	Assemble Bearings		.02	.18	.20		.20	.60	1.00		1,000			
10 Castg Assbly										11.00	11,000	$1.37½		
11														
12														
13														
14														
15														
16														
17														
18														
19														
20														

Operation	Material, $		Labor, $			Overhead, $	Total element costs, $
	Raw Material	Purcha ed Parts	Set-Up	Operate	Subtotal		
Iron	$1.25	—	—	—	—	—	1.25
Sand cast	—	—	0.20	0.30	0.50	2.25	2.75
Machine	—	—	0.55	0.20	0.75	4.25	5.00
Paint	0.05	—	—	—	—	—	0.05
Paint casting	—	—	0.05	0.20	0.25	0.70	0.95
Bearings	—	0.20	—	—	—	—	0.20
Assemble bearings	—	—	0.02	0.18	0.20	0.60	0.80
Total	1.30	0.20	0.82	0.88	1.70	7.80	11.00

TABLE 3.13- OVERALL COST ANALYSIS
OF BEARING ASSEMBLY -REF(50)

(REFER TO CLAUSE 3.4.1M FOR DETAILS)

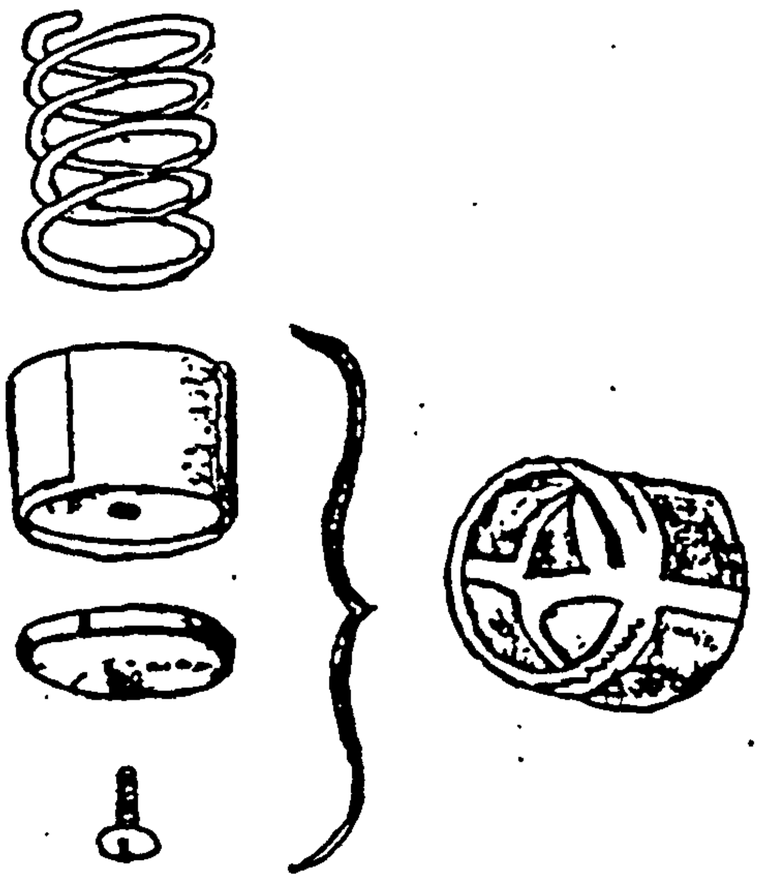

FIG.(3·14)(A)

3.14a
CHANGE IN DESIGN AND MATERIAL-Lerio Corp.replaced a three-piece discharge valve body for the piston head of a pump with a single unit synthetic rubber discharge valve body,made by international Packings Corporation. Cost of three parts plus machining and assembly was $.1114 per unit. The single unit costs $.0696 ,gives auieter operation and faster installation,is not affected by sand or small particles.

FIG.(3·14)(B)

BUYING FROM SPECIALTY SUPPLIER-A New York Company was making this"special"odd size 1/4-20 nut in the shop at $50 a thousand.By seeking out a specially supplier who listed the non-standard item,cost was brought down to $5 per thousand.

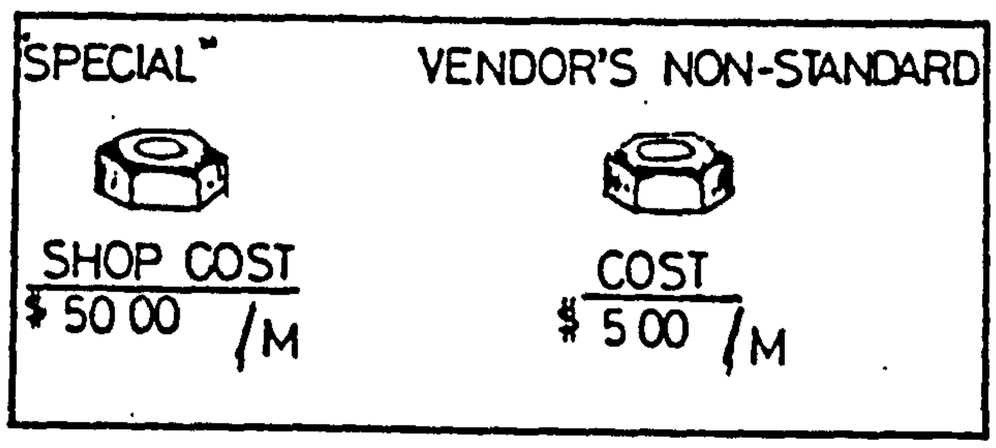

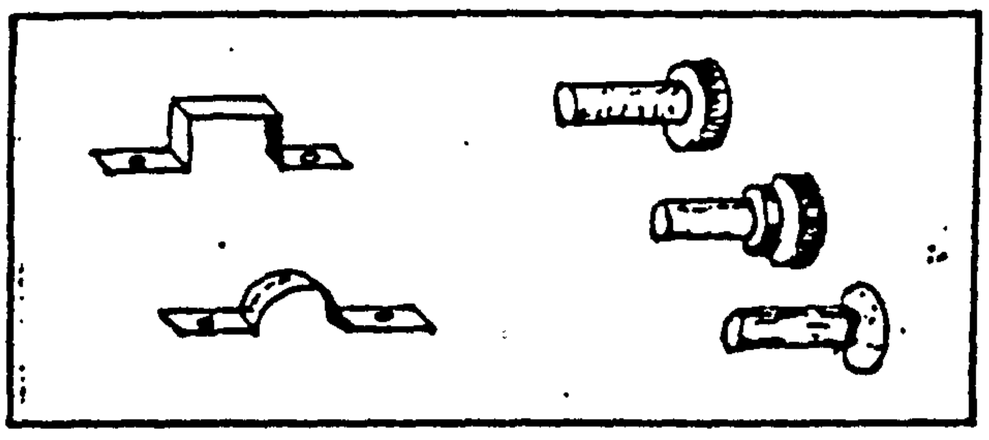

FIG.(3·14)(C)

SWITCH TO STANDARD PART-A switch from the special clamp at top (50¢ each) to the standard at bottom (3¢ each) brought a manufacturer a 47¢ saving on each unit.Similarly, the company quit buying the 15¢ set screw of top, when a search turned up the standard in center at 3¢ ,and the standard at bottom at1-1/3¢

FIG.(3·14)(A·B·C) REPORTED V·E· CASE STUDIES - REF (36).

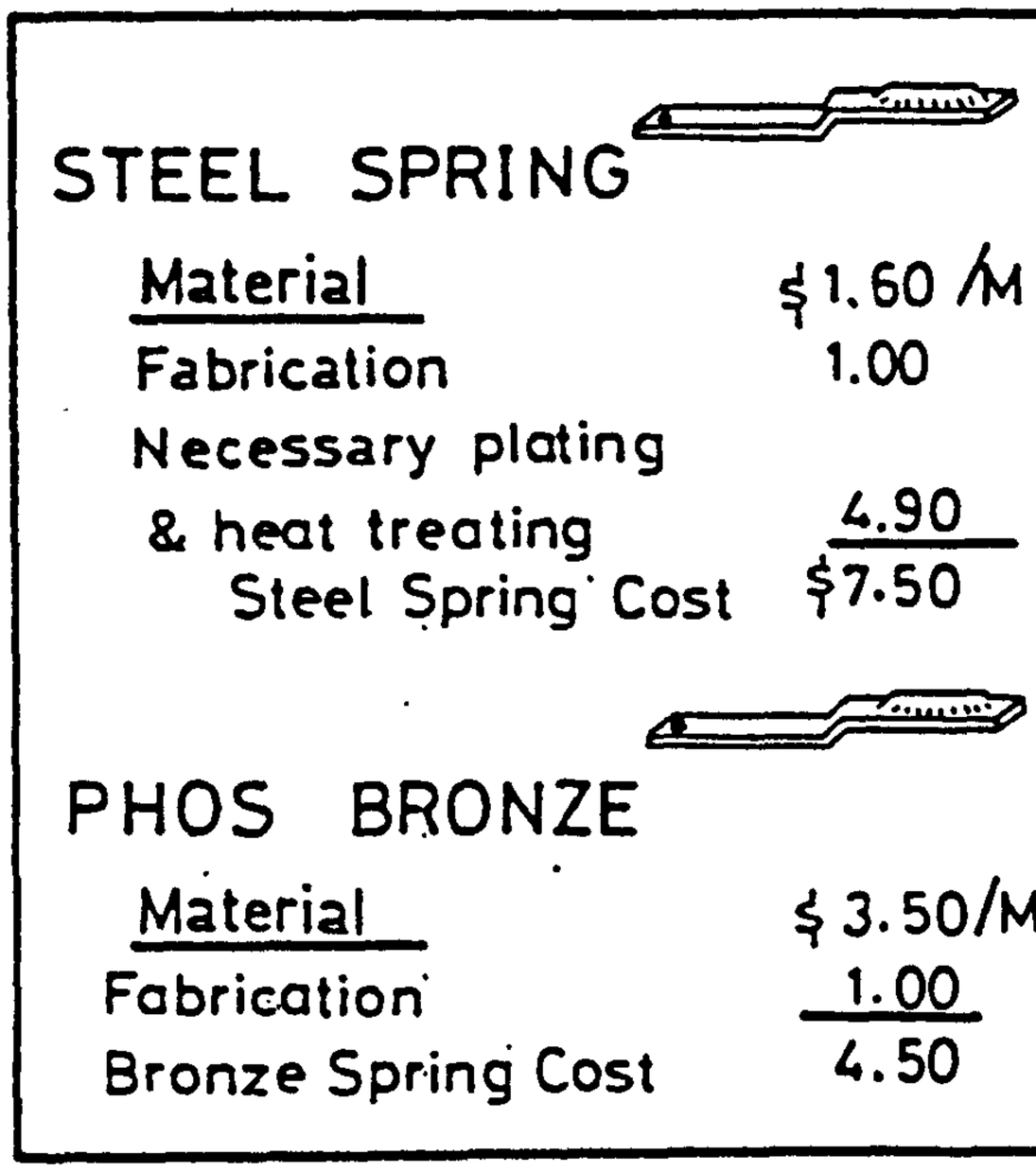

SAVING WITH MORE EXPENSIVE MATERIAL-
By switching from lower cost steel to higher cost phosphor bronze for a spring ,a manufacturere actually saved $ 3000 on every thousand units.Cost comparisons are shown in the sketch.

FiG. (3.15) REPORTED V.E CASE STUDY RFE (36)

(SAVING IN MATERIAL COSTS BY ANALYSING THE PRICE STRUCTURE OF THE MATERIAL) .

FIG.(3·16, 3·17, 3·18) ROCESSES OF EVALVATION BY COMPARISON REF(51).
(REFER TO CLAUSE 3·41-0 FOR DETAILS)..

A-Ground lead

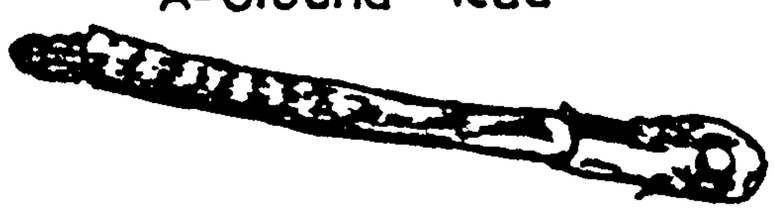

Example A.Ground lead,3 1/2 in.. long for connecting two terminals inside a "black box".About 55.000 required per year.

B-Terminal board stud

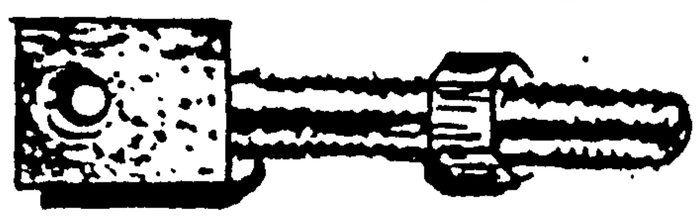

Example 8 Terminal board stud,2 1/ in.long machined from solid copper bar.About 5000 required per year.

FIG.(3·16) ORIGINAL PARTS.

Example	Basis of similarity	comparison item	Estimated cost
A - Ground lead Present cost 16¢	shape. shape& size shape shape size	auto batterv cable brush lead on dc motor pipe cleaner buss bar connector blade of kn_fe switch	10¢ 12¢ 3¢ 4¢ 8¢
B-Terminal stud present cost $1.02	shape shape shape shape	common hex nut common pal nut standard threaded rod threaded nail	2¢ 1¢ 3¢ 2¢

FIG.(3·17) COMPARISON CHART..

Original cost-16¢

New cost-2¢

Grounding lead is now a copper strip(from the bus comparison item) .Since the lead is used inside the a balck boc the insulation is unnecessary. Here redesign with a new material created savings and was responsible for better value.Total savings and was responsible for better value.Total savings are $7700 per year on 55,000 units

orginal cost-$ 1.02

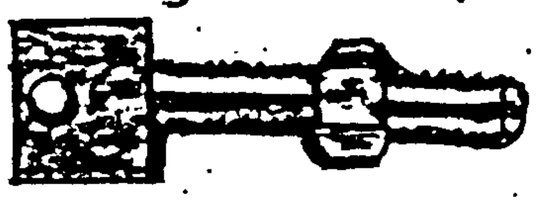

New cost-10¢

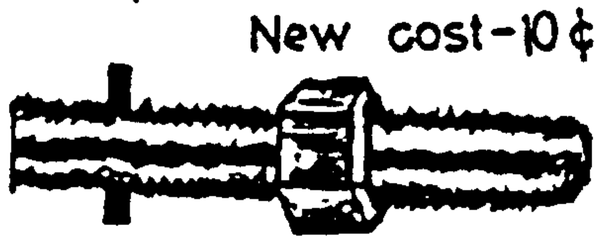

Terminal board stud now consists of purchased threaded copper rod with roll pin to perform holding function finstead of entire part being machined out of copepr bar. savings amount to$4600 for each 5000 lot.Comparison item for square end was a nut ,but when the question was asked"what does the nut do

FIG.(3·18) ALTERNATIVE (BETTER-VALUE) SOLUTIONS.

What does it look like ?

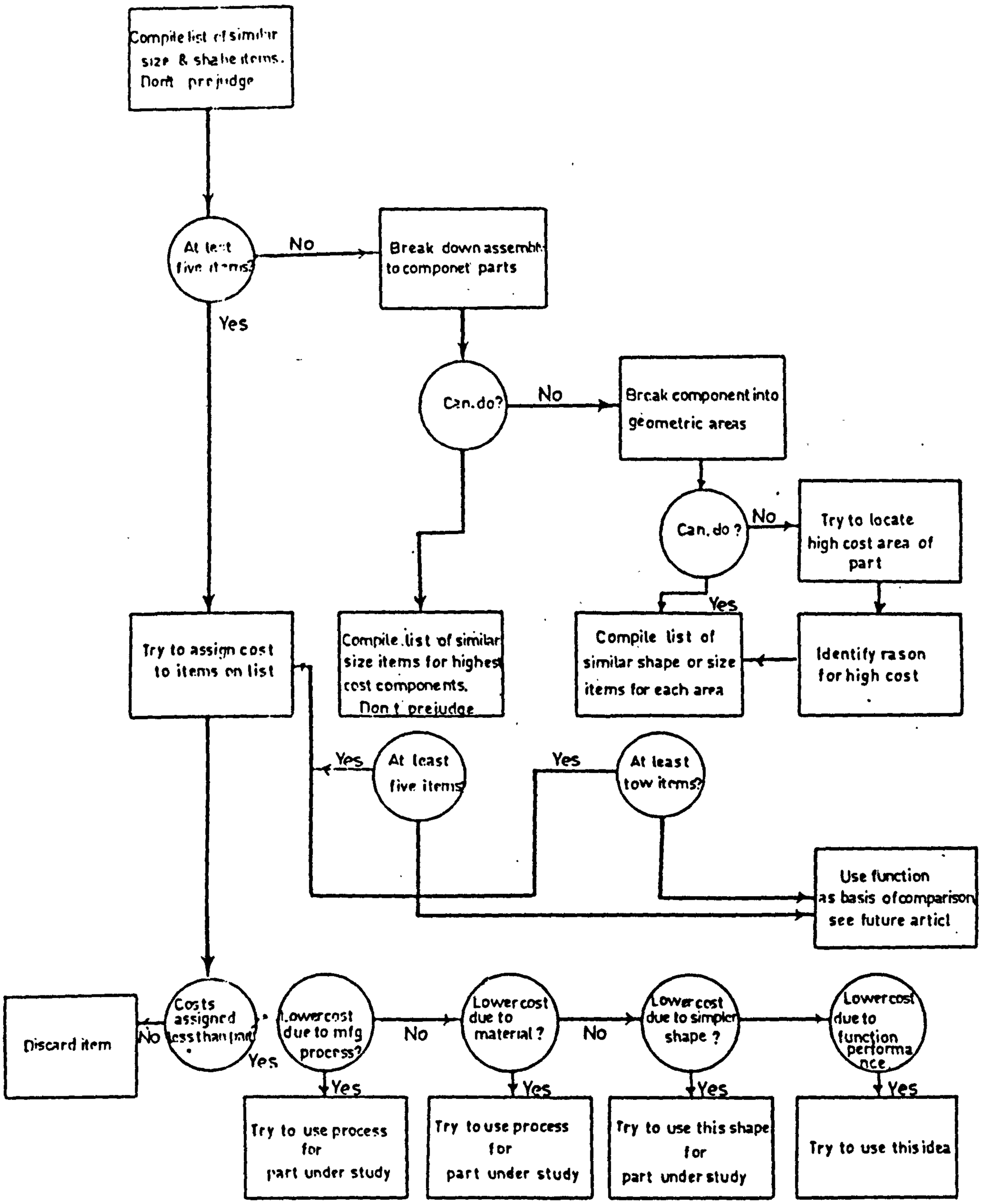

FIG.(3·19) A FLOW DIAGRAM FOR EVALUATION - BY - COMPARISON TECHNIQUE -REF-(51) .

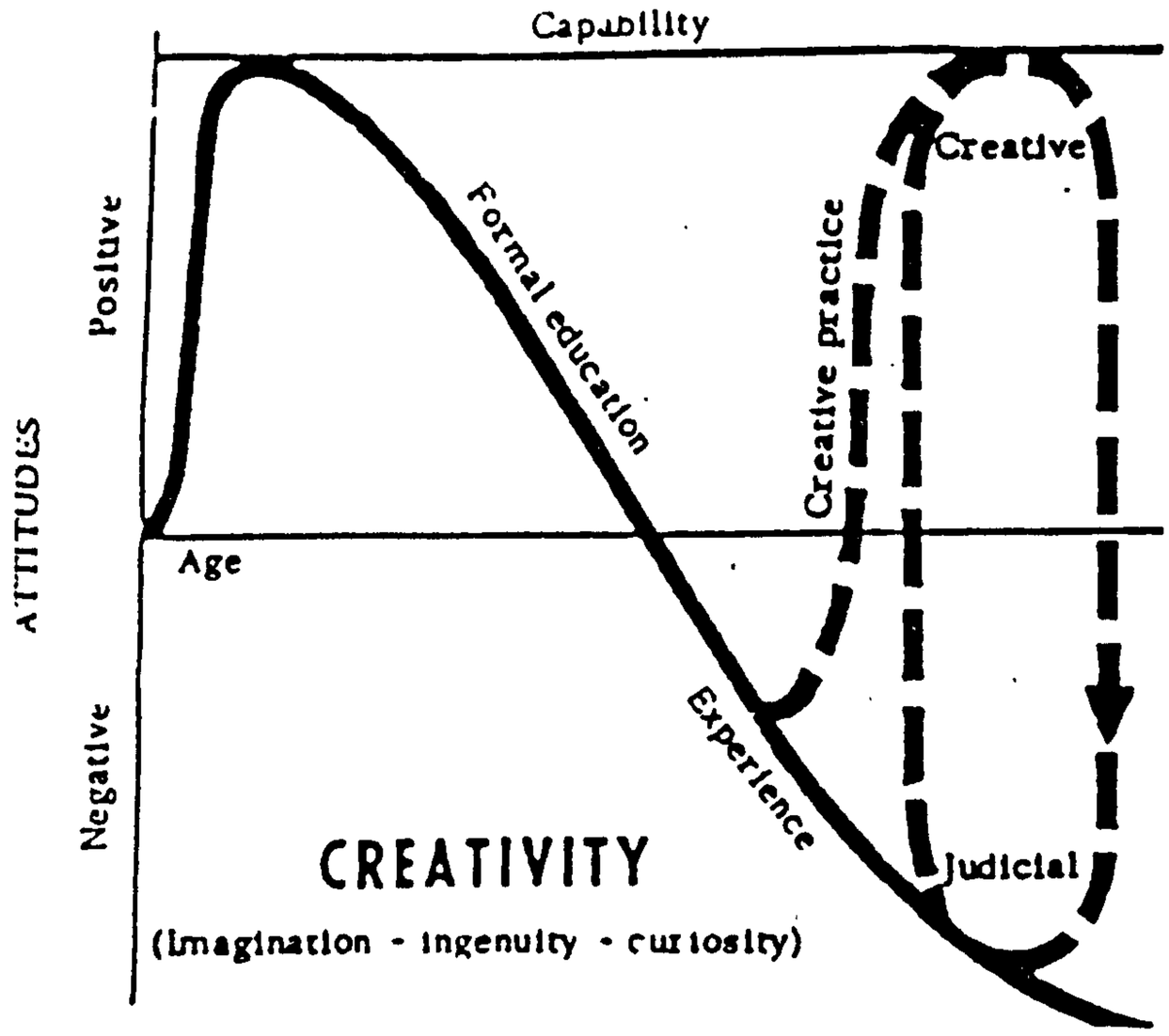

SUBJUGATION to closely directed well-disciplined activity from kindergarten through the college years tends to encourage conformity and smother creative expression and curiosity.

FIG.(3·20)-REF (52).

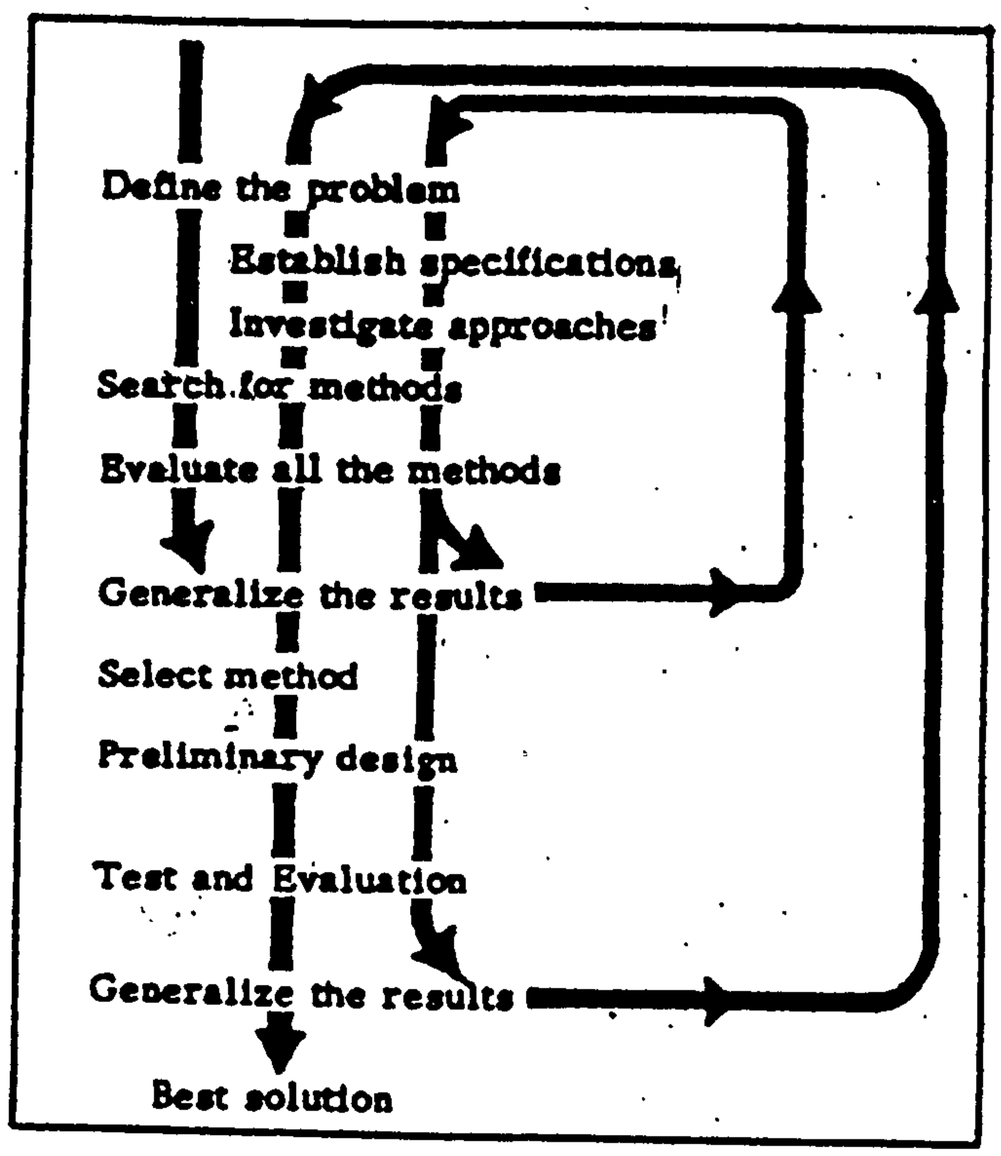

CREATIVE EXPRESSION to be efficient and successful must be planned and scheduled, and recommended procedures followed either consciously or subconsciously.

FIG.(3·21)-REF (52).

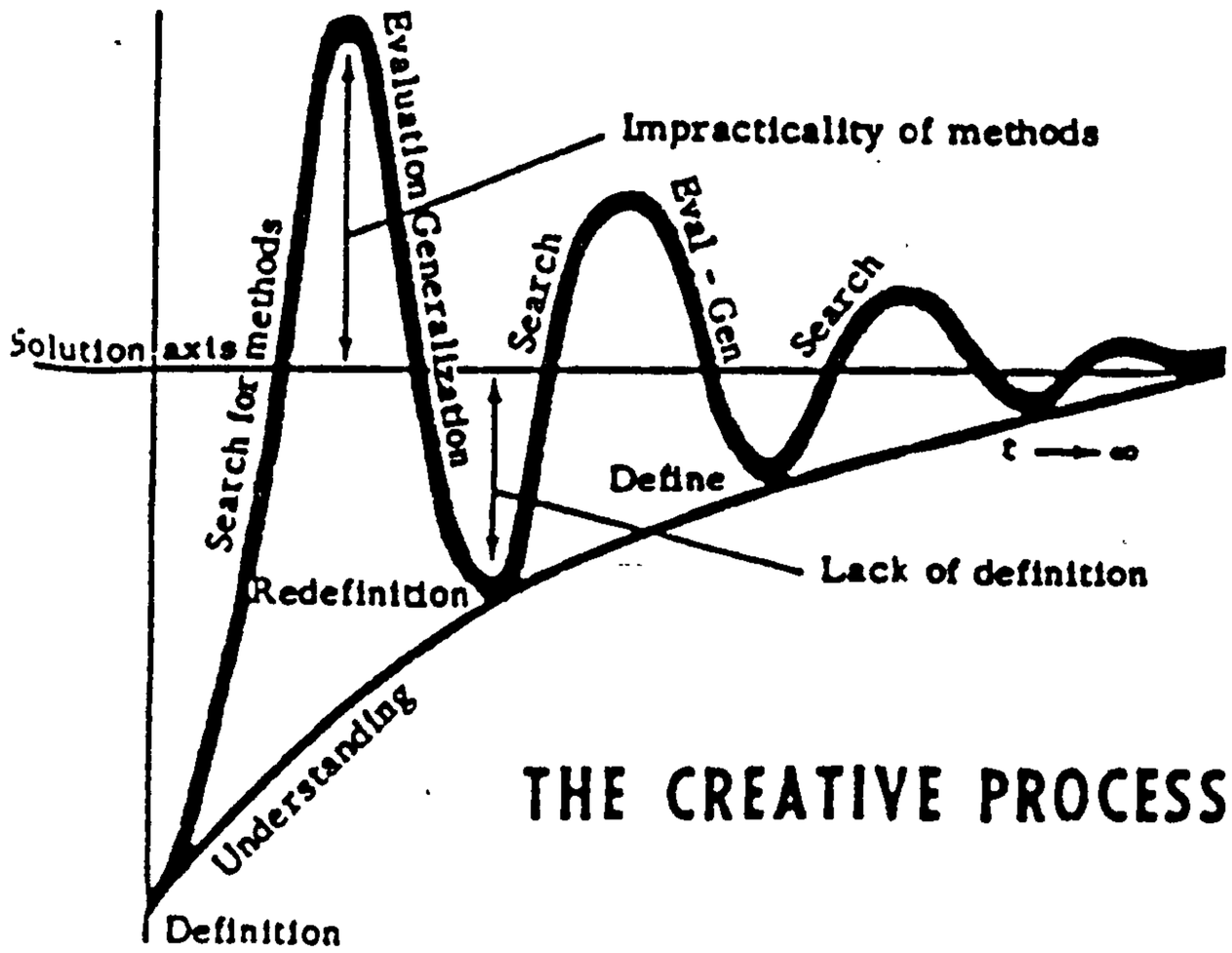

THE CREATIVE PROCESS

CREATIVE ABILITY improves not only as you practice your facility for grouping knowledge into new combinations but also as you study to enlarge your capacity for understanding.

FIG.(3·22)-REF (52).

Blast ⟶ Create ⟶ Refine

, It costs 32 cents in quantities of 4000 per year. The basic function was determined as,to provide holding which would be equivalent to that of two hex nuts, plus a secondary fastening function that could be provided by the welding of two nuts side by side.

Blasting determined that two standard hex nuts would probably fulfill the basic function at a cost of 3 cents. However, the problem of providing the secondary fastening function remained. The two nuts would have to be fastened together, maintaining the correct center to center distance.

Creating alternates to provide a suitable means of performing the function generated the following:

Weld the nuts side by side; press them into a piece of sheet metal; press them into holes in a piece of sheet metal; weld them onto a piece of wire; weld them onto a piece of sheet metal.

By refining the alternates, it was found that two standard weld nuts could be spot welded onto a simple stamped part as shown, providing an alternate design which would reliably accomplish all the required functions for 8 cents, or at one-fourth the original cost.

FIG.(3·23) THE APPLICATION OF THE BLAST CREATE REFINE TECHNIQUE TO A CLAMP BAR - REF (52).

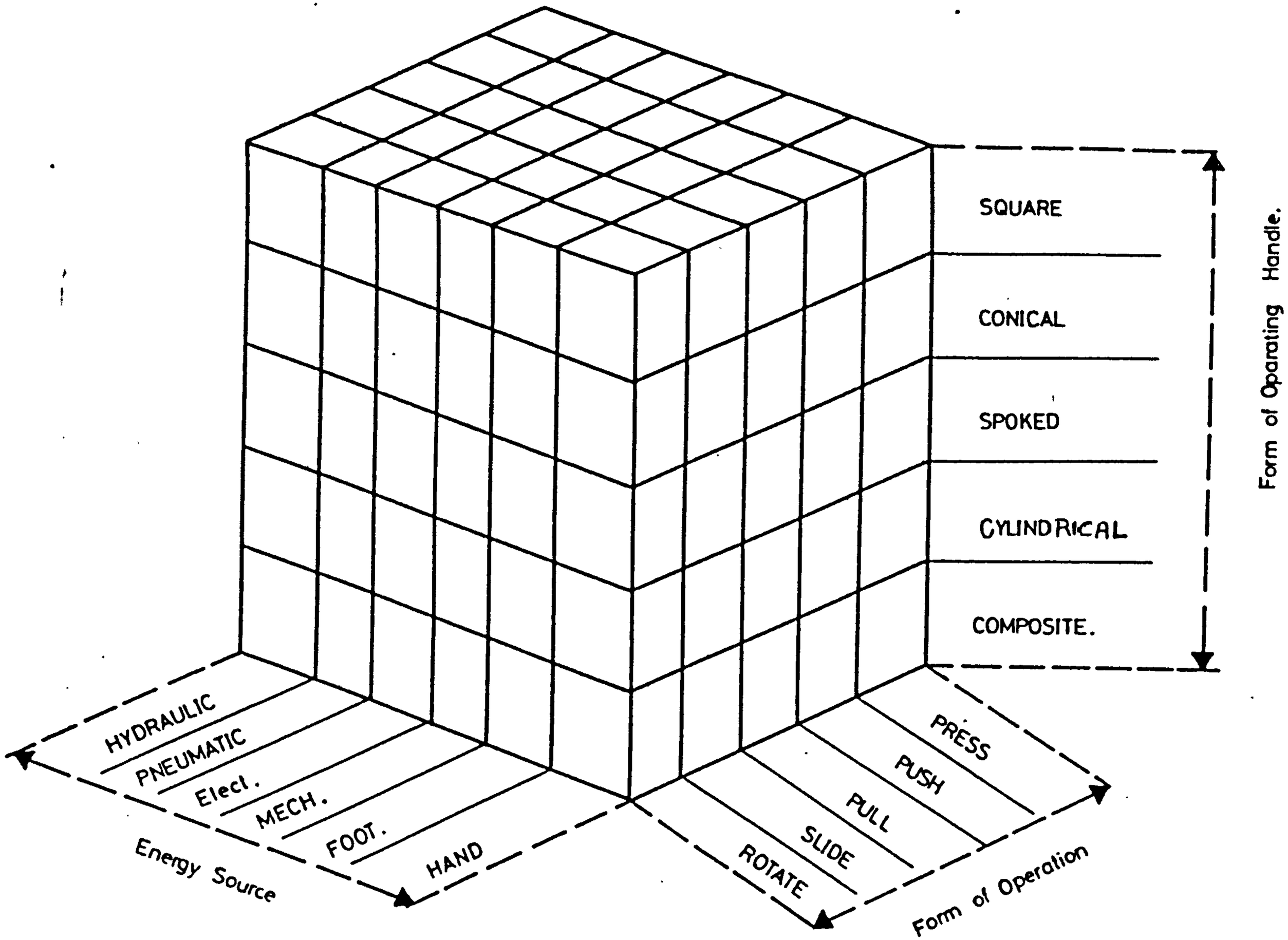

FIG.(3·24) MORPHOLOGICAL ANALYSIS TECHNIQUE–STRUCTURE ANALYSIS OF WATER TAP HANDLE – REF (56).

JOY MANUFACTURING COMPANY

Ref.No. MEA-1

J O Y

CREATION WORKSHEET

FUNCTION CONDUCT CURRENT

1. WIRE	26. ELECTROLYTE
2. BOLT	27. ALUMINIUM
3. WELDING ROD	28. IONS
4. WATER	29. LIQUID
5. AIR	30. OIL
6. IRON	31. LEAD
7. STEEL	32. ZINC
8. BRASS	33. TUBE
9. COPPER	34. PIPE
10.PAPER CLIP	35. WOOD
11.NAIL	36. FUSE
12.LASER	37. SOCKET
13.MAGNETIC FIELD	38. PLUG
14.ROD	39. WASHER
15.SCREW	40. TRANSISTER
16.NUT	41. SOLUTION
17.CLIP	42. HEATED GLASS
18.TAPE	43. FOIL
19.PLASTIC	
20.HUMAN BODY	
21.BAR	
22.CARBON	
23.RADIATE	
24.GAS	
25.DIRT	

TEAM MEMBERS _____ DATE 9-5

FORM NO. VALUE ENGINEERING

FIG.(3.25) CREATION WORK SHEETS TYPICAL SHEETS-TYPICAL ONLY REF(55)

J O Y JOY MANUFACTURING COMPANY REF. NO. MEA-1

CREATION WORKSHEET

FUNCTION CREATE SEA/

1.	paint	26	braze
2.	rubber	27	plate
3	ring	28	solder
4.	plug	29	glass
5.	dried blood	30	vacuum
6.	varnish	31	spigot
7.	glue	32	labyrinth
8.	plastic	33	water
9.	epoxy	34	dovetail
10.	wax	35	cork
11.	pitch	36	flange
12.	chrone	37	paper
13.	weld	38	red
14.	rivet	39	foam plastic
15.	fit	40	stopper
16.	washer		
17.	soap		
18.	gasket		
19.	leather		
20.	grease		
21.	air		
22.	heat		
23.	freeze		
24.	compress		
25.	expand		

TEAM MEMBERS JOHN A. DOE, BILL E. EGAN, FRANK M. SMITH DATE 9-5

FORM NO. VALUE ENGINEERING

FIG.(3.26) CREATION WORK SHEETS TYPICAL SHEETS - TYPICAL ONLY REF(55)

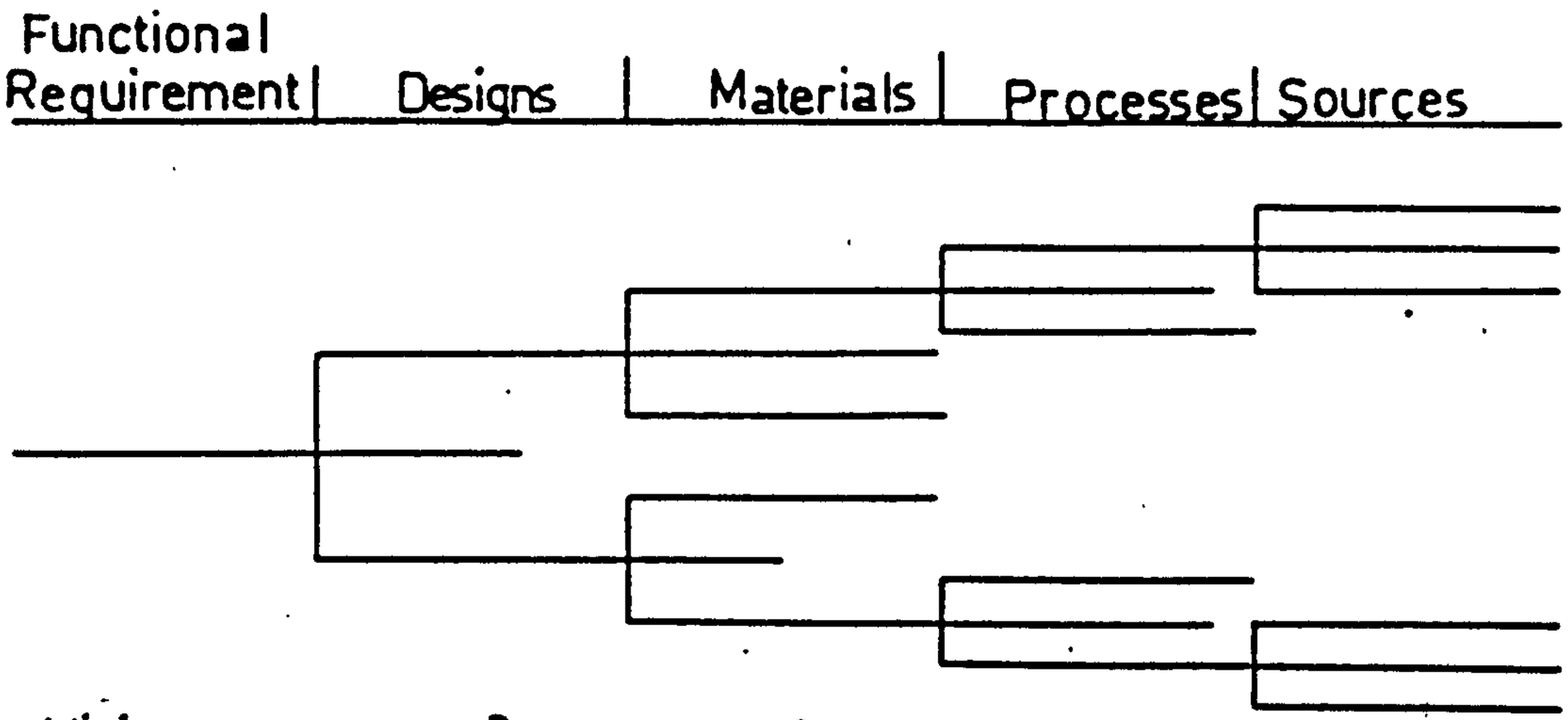

FIG.(3·27) THE VALUE PROBLEM COMPLEXITY - REF (42).

THE IDEA: MAKING A POWER CABLE OF SODUIM

GOOD	BAD
LOW COST DUCTILE PLENTIFLE SUPPLIES FLEXIBLE LIGHT	REACTS INSTANTLY INCONTACT WITH WATER OXIDIZES RAPIDLY IN AIR

FIG.(3·28) GOOD- BAD T - CHART.

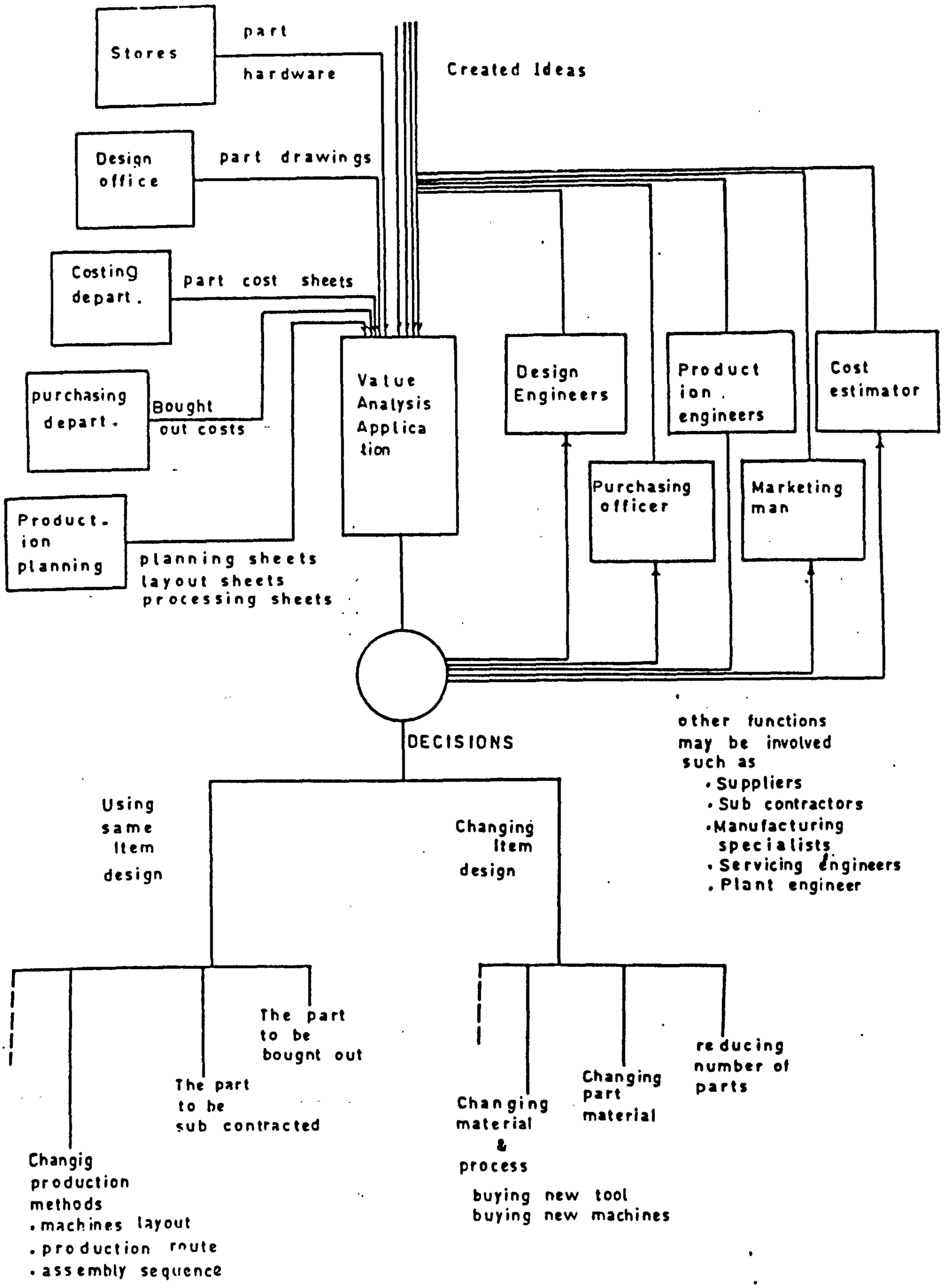

FIG.(3·29) VALUE ENGINEERING APPLICATION TO PRODUCTS AT THE PRODUCTION STAGE – (PARAMETERS INVOLVED AND DECISIONS) .

TABLE 3.30 VALUE ENGINEERING TECHNIQUES RELATIONSHIP REF(42)

Functional Approach	Job Plan	Key Techniques	Supporting Techniques	V.E. Questions
1. Define Functions	Information Phase	Get all the facts Determine costs Define the function Put $ on specs. & reqs.	Get info. from the best sources Work on specifics Use good human relations Overcome roadblocks Divide product into functional areas	What is it? What does it do? What does it cost?
	Creation Phase	Blast and Create	Creative thinking Deferred judgement Use teamwork	What else will do job?
2. Evaluate Functions	Evaluation Phase	Evaluate by comparison Evaluate basic function Put $ on each idea Refine ideas	Use good business judgement Analyse Costs Evaluate ideas Evaluate functional areas	What is the value of the function?
3. Develop Alternatives	Investigation Phase	Consult vendors Use co. & industrial specialists Use co. & industrial standards Use specialty products, processes & matls. Determine costs	Overcome roadblocks Develop ideas Apply new info. Don't be a hermit (others listed above)	What else will do job? What will that cost?
	Recommendation Phase	Motivate positive action	Use good human relations Spend company's money as you would your own Develop & sell or implement your solution (others listed above)	

IDENTIFICATION & DETERMINATION OF
FUNCTION OR FUNCTIONS WHICH ARE
PERFORMED BY THE ITEM OR PART

↓

DEFINING EACH FUNCTION PRECISELY
USING VERB-NOUN FORMAT

↓

ANALYSIS AND CLASSIFICATION
OF FUNCTIONS INTO:
BASIC FUNCTIONS
SECONDARY FUNCTIONS

FIG.(3·31) PROCEDURE OF FUNCTION ANALYSIS _ MILES
-REF (20).

TABLE (3.33):FUNCTIONS DEFINITIONS USING VERB-NOUN FORM-TYPICAL ONLY REF(42)

Work Functions

Verb	Noun – measurable
Support	Weight
Transmit	Torque
Hold	Load
Enclose	Oxidation
Collect	Light
Conduct	Heat
Insulate	Flow
Protect	Radiation
Prevent	Current
Amplify	Voltage
Rectify	
Change	Noun non-measurable
Interrupt	
Shield	part, device, component,
Modulate	article, table
Control	
Attract	Damage
Emit	Circuit
Repel	Repair
Filter	
Impede	
Induce	

Sell Functions

Verb	Noun
Increase	Beauty
Improve	Appearance
Create	Convenience
Establish	Style
	Prestige
	Features
	Form
	Symmetry
	Effect
	Looks

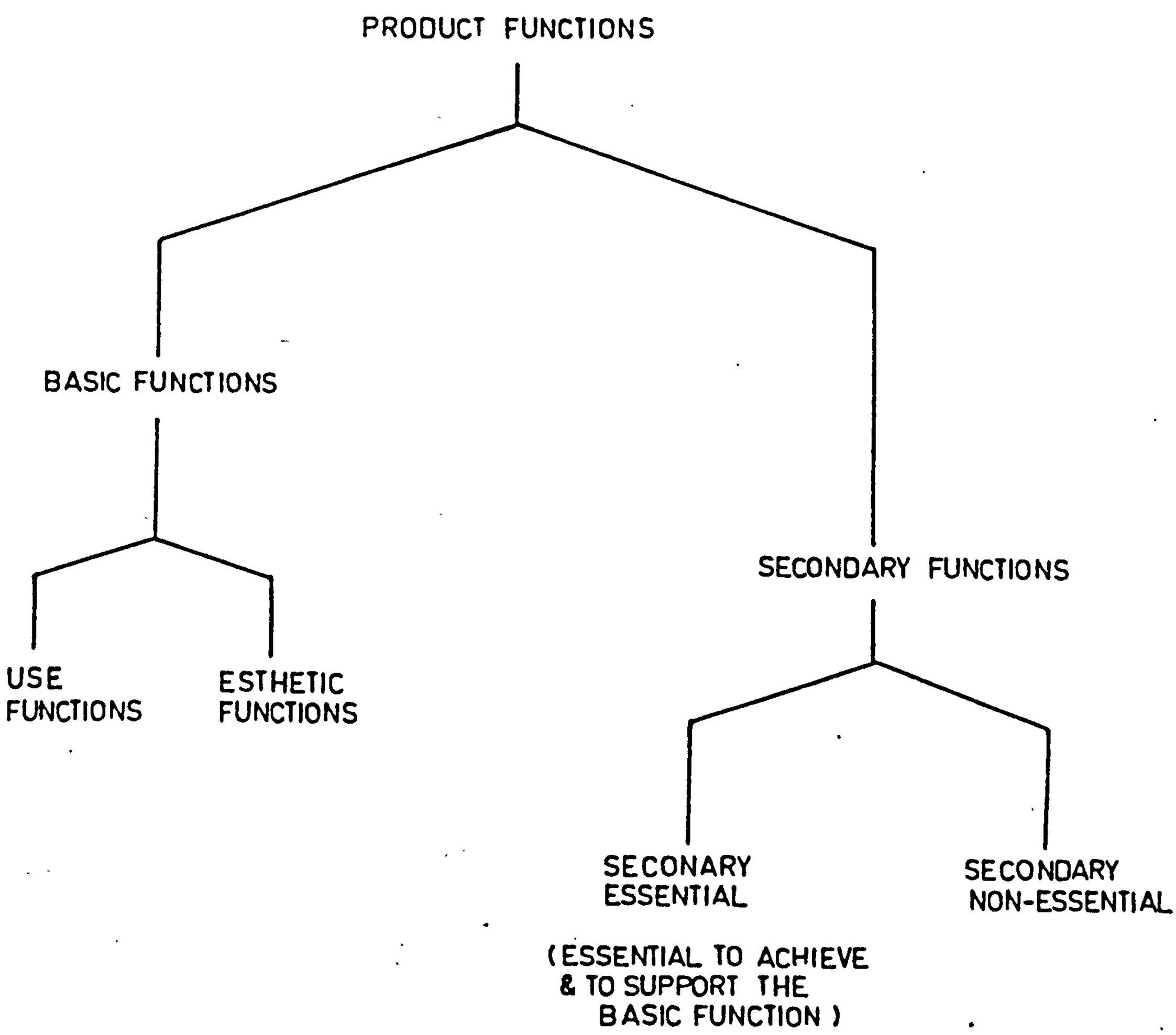

FIG. (3·32/4) GENERAL CLASSIFICATION OF FUNCTIONS REF (42).

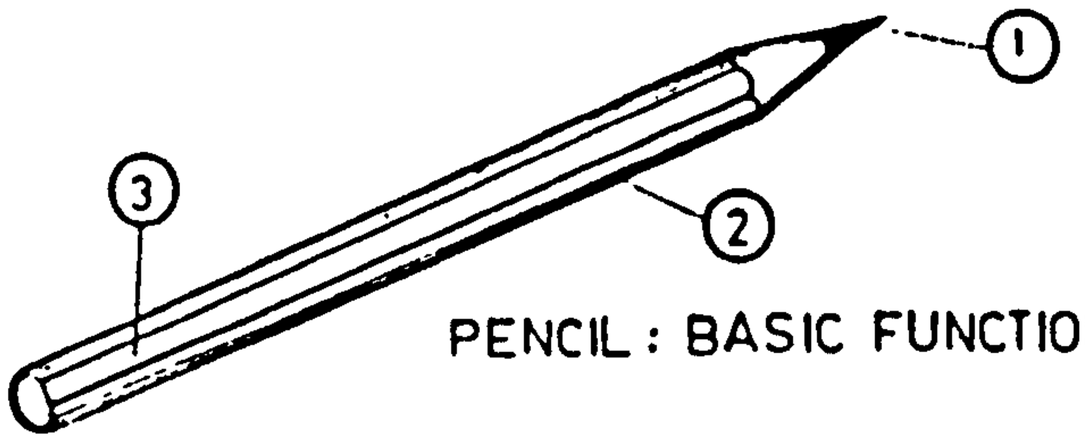

PENCIL : BASIC FUNCTION: MAKE MARKS

COMPONENT PARTS	FUNCTION	BASIC	SECONDARY	
			ESSENTIAL	NON ESSEN
(1) LEAD	MAKE MARKS	✓		
(2) WOOD	SUPPORT LEAD		✓	
	PROTECTS FINGER		✓	
	PROVIDE GRIP		✓	
	CARRIES INFORM.			✓
(3) PAINT	DISPLAY INFO.			✓
	ADDS ATTRACTIVE-NESS			✓

FIG.(3·35)(A) ANALYSIS OF FUNCTION OF A PENCIL - REF (43).

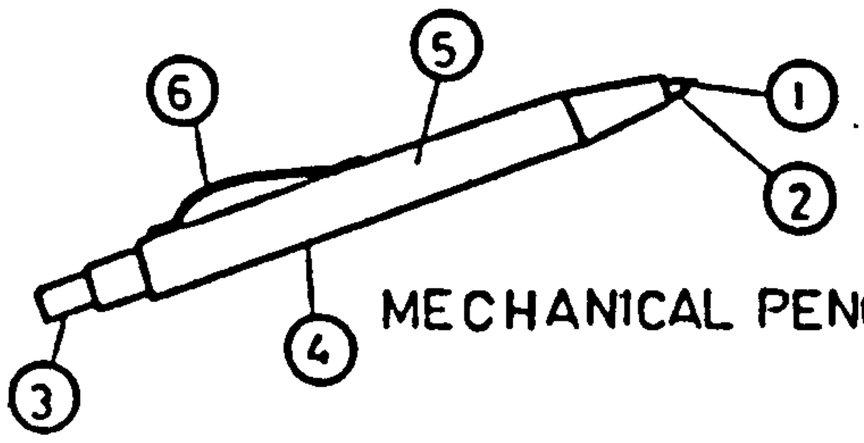

MECHANICAL PENCIL: BASIC FUNCTION, MAKE MARKS

COMPONENT PARTS	FUNCTIONS	BASIS	SECONDARY
1 LEAD	MAKE MARKS	✓	
2 LEAD HOLDER	HOLD LEAD		✓
3 LEAD MOVING MECHANISM	MOVE LEAD		✓
4 CASE	SUPPORT MECHANISM		✓
5 PAINT	IMPROVE APPEARE-NCE		✓
6 CLIP	HOLD PENCIL		✓

FIG.(3·35)(B) ANALYSIS OF FUNCTIONS OF MECHANICAL PENCIL - REF (42).

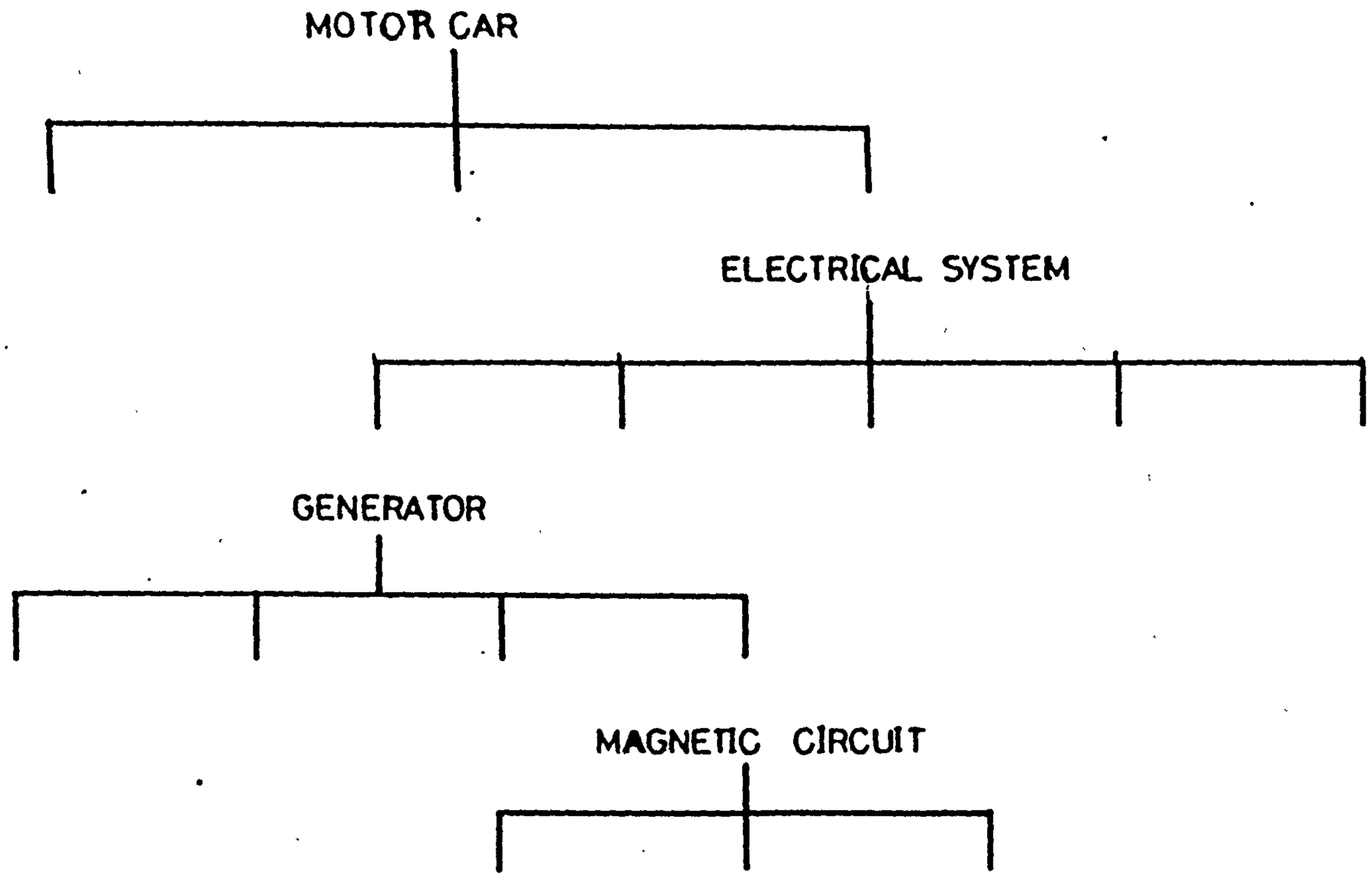

FIG.(3·36) FUNCTION ANALYSIS OF A COMPLEX SYSTEM—ANALYSIS OF A MOTOR CAR REF (44)-JOSEPH LUCAS LTD. V·E HANDBOOK .

FUNCTION ANALYSIS SYSTEM TECHNIQUE DIAGRAM

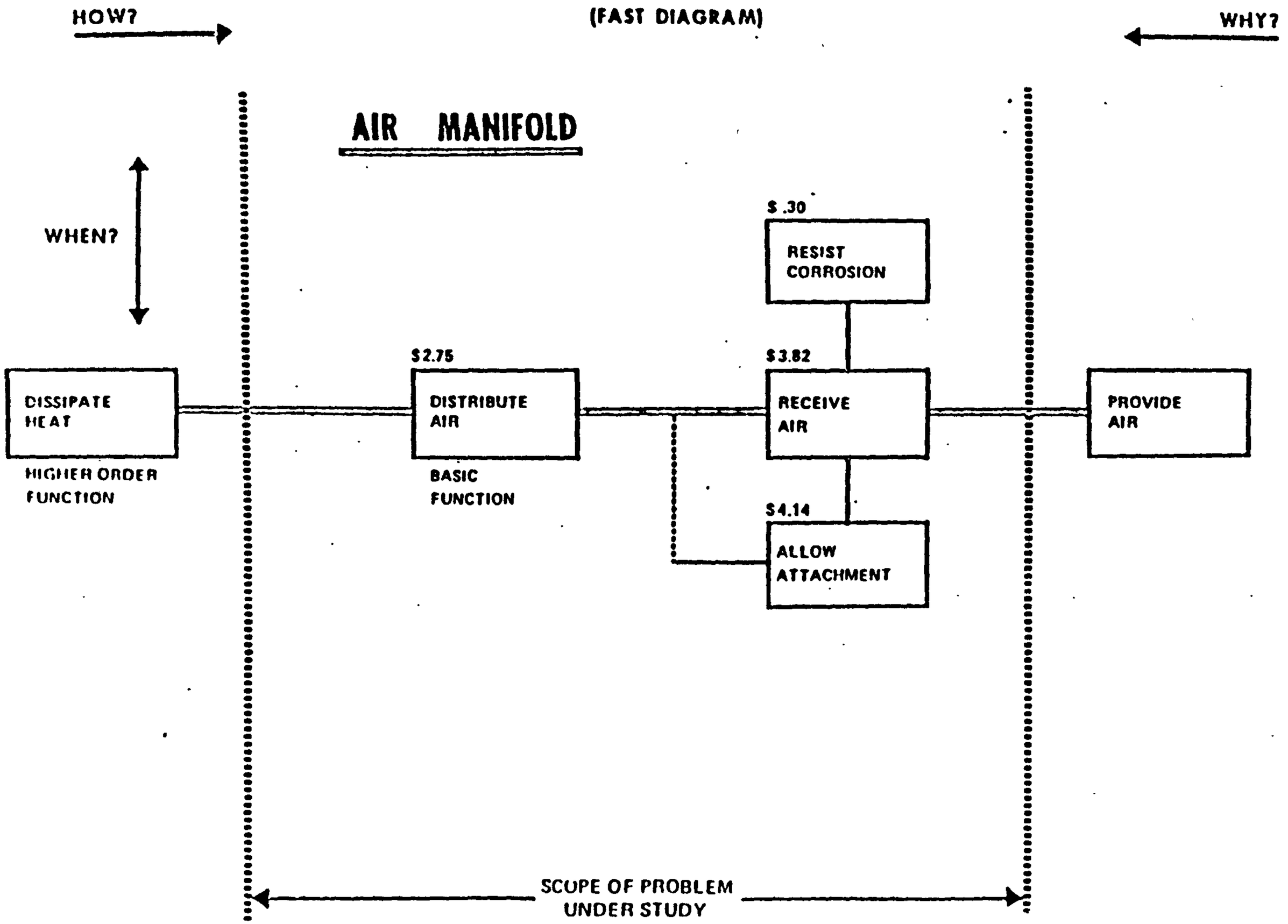

FIG.(3·37) FUNCTION ANALYSIS OF AIR MANIFOLD USING FAST DIAGRAM - REF (60) ·

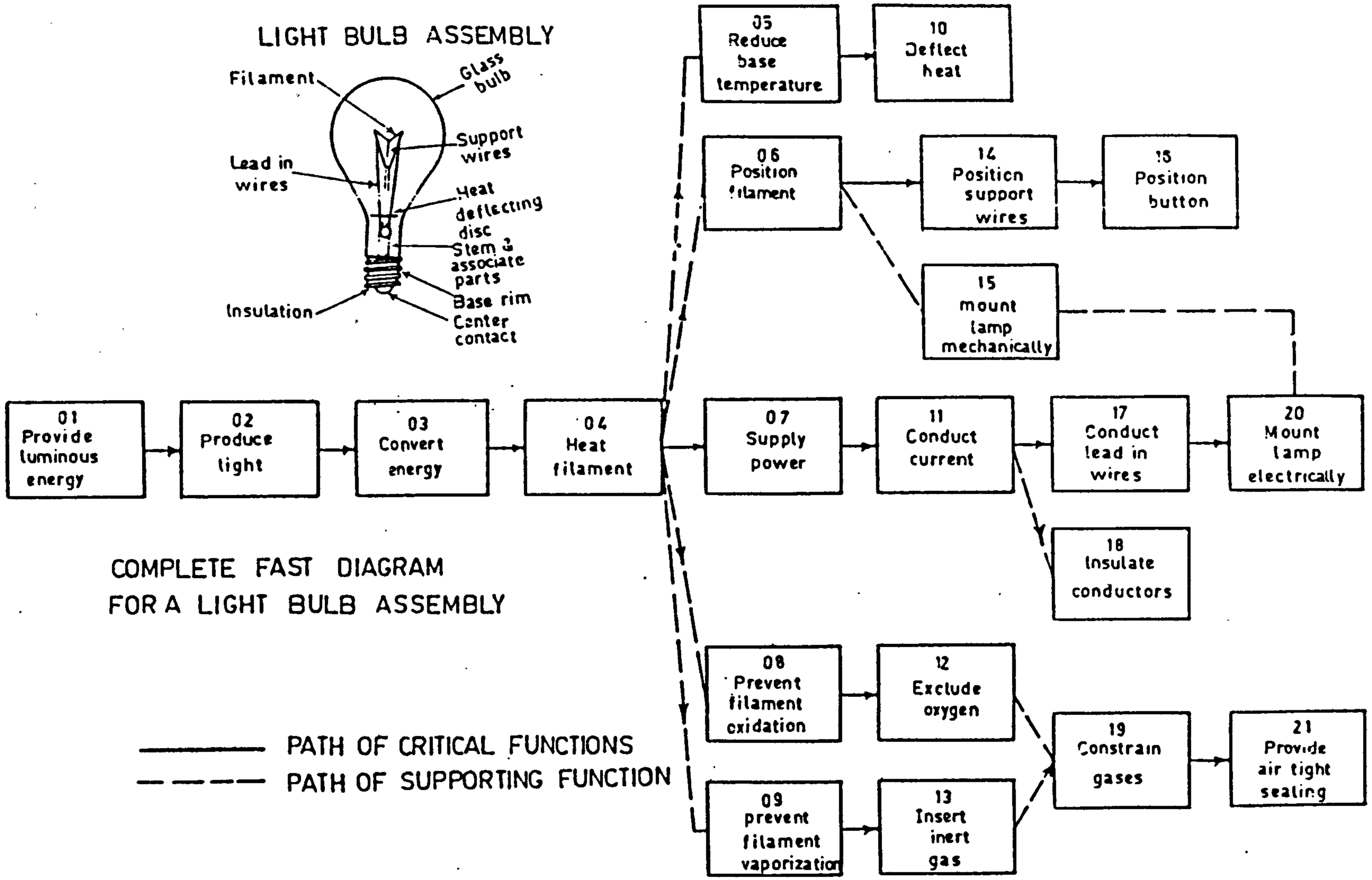

FIG.(3-38) FUNCTION ANALYSIS OF A LIGHT BULB USING FAST DIAGRAM - REF (58) .

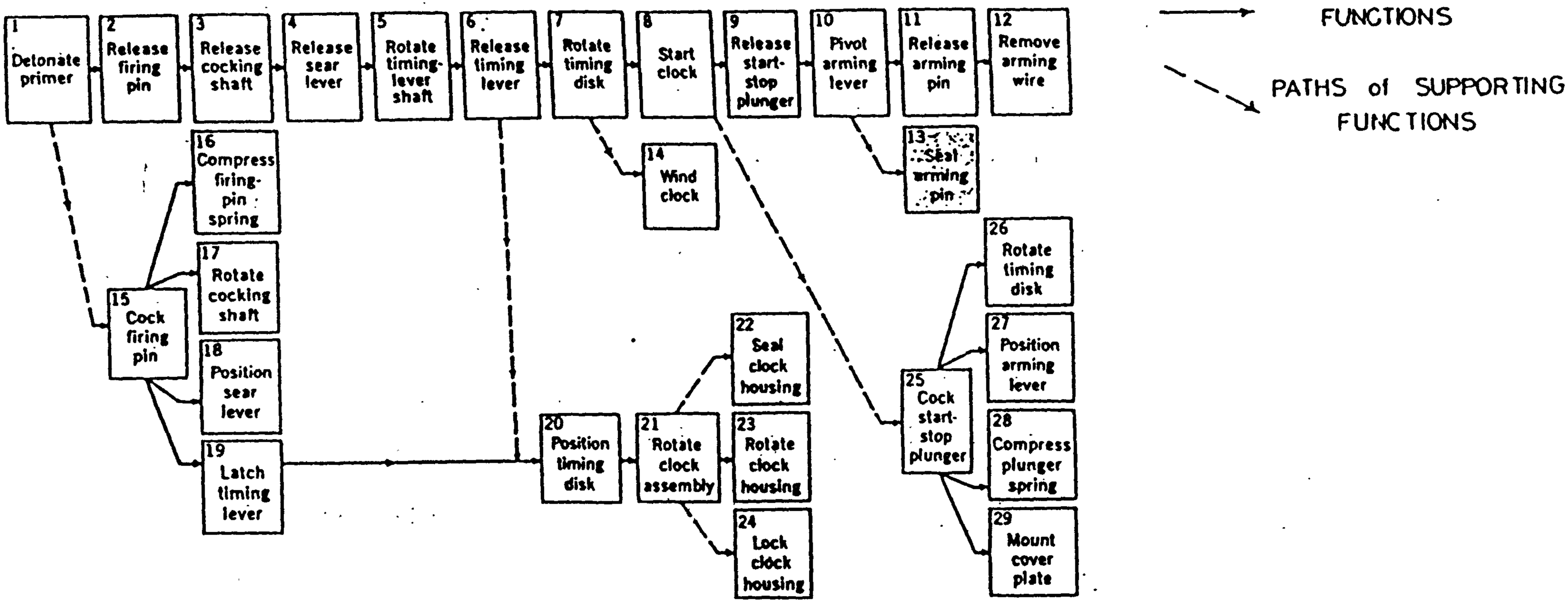

FIG.(3·39) TYPICAL FAST DIAGRAM FOR A COMPLEX MECHANISM FAST DIAGRAM FOR A "COALESCING ARMING TIMING FIRING" MECHANISM - REF (59).

FUNCTION ANALYSIS SYSTEM TECHNIQUE DIAGRAM

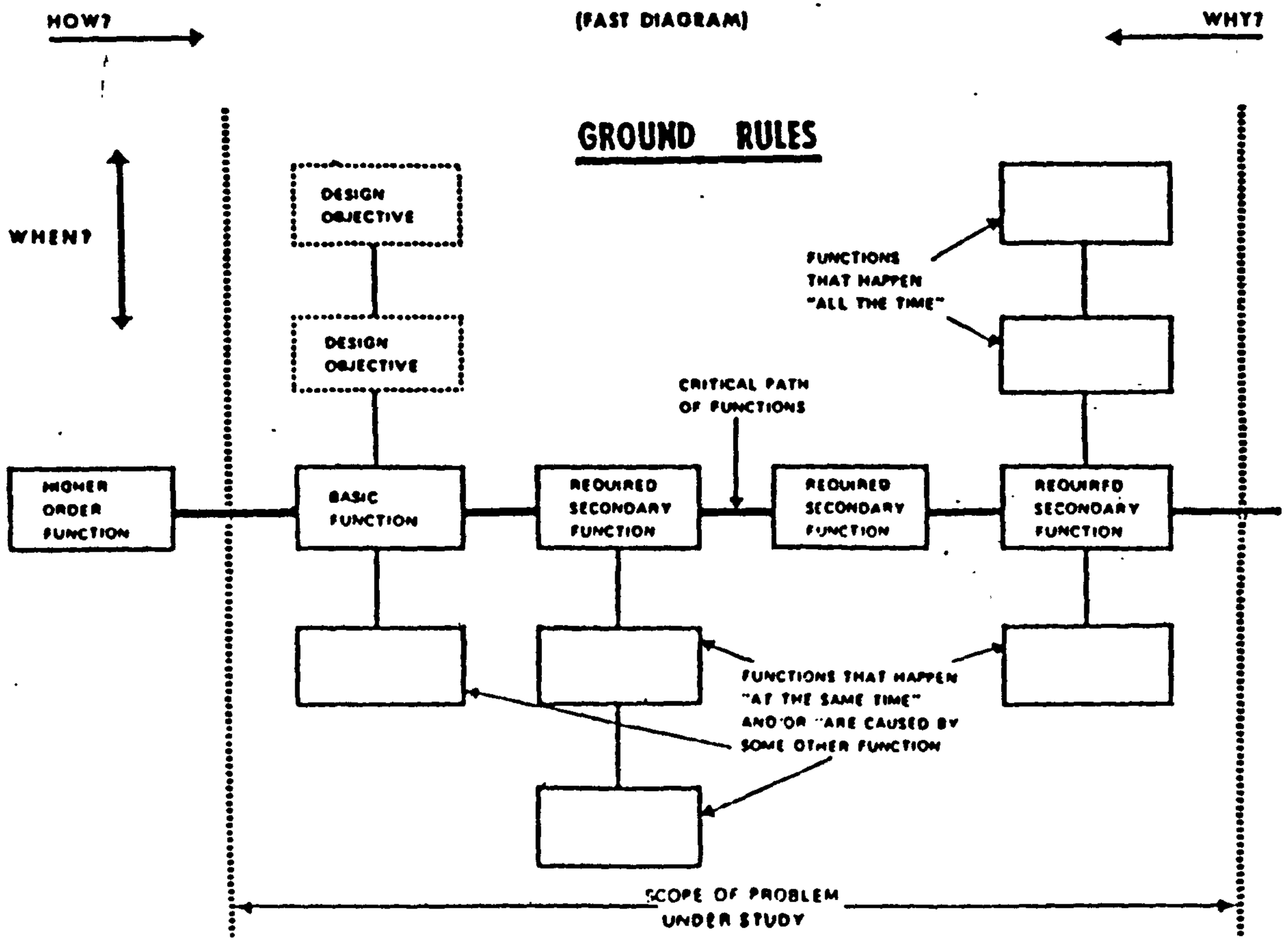

FIG. (3·40) CONSTRUCTION OF FAST DIAGRAM FOR A SIMPLE SYSTEM - REF (60).

PART	FUNCTION	BASIC	SECONDARY	COST	BASIC COST	SECONDARY COST
NIB	MAKES MARKS	X		90P	90p	
NIB SUPPORT	SUPPORTS NIB		X	20P		20P
	CONVAY INK		X			
NIB SOCKET	SUPPORT NIB SUPPORT		X			
	RESERVOIR		X	30P		30P
RESERVOIR	STORES INK	X		15P	15P	
BODY	PROTECT RESERVOIR		X	150P		150P
FILLING LEVER	FILLS RESERVOIR		X	30P		30P
CAP	PROTECTS NIB		X	60P		60P
CLIP	ASSISTS CARRYING		X	20P		20P
TOTAL				415 P	105P	310P

TABLE 3.41 : FUNCTION COST ANALYSIS OF SIMPLE PRODUCT
F.C.A. FOR FOUNTAIN DEN-REF(44)

ELECTRICAL FUNCTIONING PARTS	12% of cost(basic)
MECHANICAL FUNCTIONING PARTS	10% of cost (basic)
PROTECTIVE TREATEMENTS	5% of cost (secondary)
CASE AND COVER	35% of cost (secondary)
ASSEMBLY	38% of cost (secondary)

TABLE 3.42 FUNCTION COST ANALYSIS OF COMPLEX PRODUCT
F.C.A. OF ELECTRICAL CONTROL GEAR_REF(44)

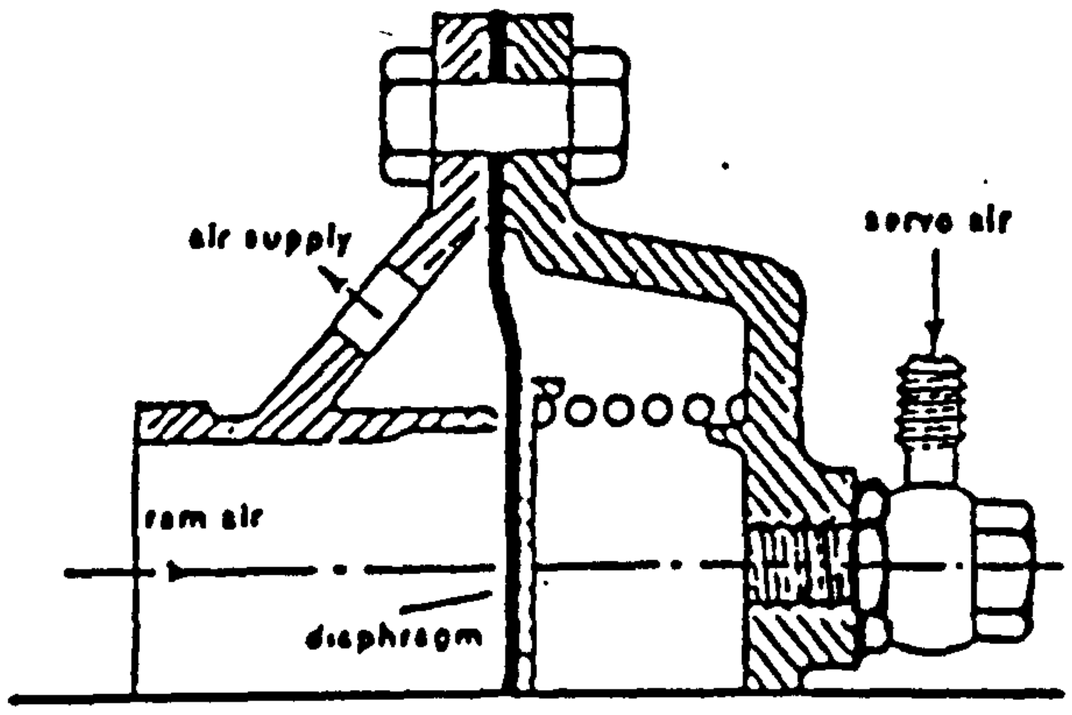

Parts or assemblies	cost £
banjo assembly	1·07
valve body	6·62
spring	0·39
diaphragm assembly	2·14
cover	2·24
lug	0·10
nuts, bolts and washers	2·34
assembly cost	4·53
total	19·48

parts	functions	stop air	sense ram air	sense servo air	sense cabin air	connect parts	provide mounting	resist corrosion	provide support	provide interchangeability	no function	£ total cost	%
banjo assembly			·2		·4				·47			1·07	5·5
valve body	·4	1·0			2·62	·8	·2	·8		·8		6·62	34·0
spring										·39		0·39	2·0
diaphragm assembly.	·6	·1	·1	·1	·94		·2	·1				2·14	11·0
cover			·4		1·2	·1	·1	·34	·1			2·24	11·5
lug										·1		·1	·5
nuts, bolts and washers					2·14		·1		·1			2·34	12·0
assembly					4·53							4·53	23·5
total	1·0	1·1	·7	·1	12·08	·9	·6	1·24	·67	1·09			
% total	5·1	5·7	3·6	·5	62·0	4·6	3·1	6·4	3·4	5·6		19·48	100·0
high or low					H					H			

FIG.(3·43) EXAMPLE OF FUNCTIONAL COST MATRIX AIRCRAFT AIR VALVE - REF (43) .

FIG.(3.44a,b&c) FUNCTION -COST-MATRIX FOR DIFFERENT PRODUCTS-REF(61)

Item / FUNCTION	Prevent distortion	Sep. syncs	Process syncs	Remove digits	Match outputs	Provide power	Display digits	Supply syncs	Provide serviceability	Cost of item £	%
Resistors	21	72	24	75	17	52	36	15		312	
Capacitors	189	74	28	29	42	53	147	16	16	561	
Transformers	—	—	—	—	—	450				450	
Chokes	248	13	12	24	24	—	24	24	—	326	
Integrated circuits	—	69	193	—	—	—	340	—	—	602	
Transistors	22	69	—	100	75	157	45	12		484	
Diodes	—	42	—	54	—	106	13	—	—	219	
Trimmers	—	—	—	—	—	—	—	—	435	435	
PWB	17	37	12	37	17	52	62	12	—	248	
Assembly	43	94	31	94	43	131	153	31	—	628	
Cost of Function	319	648	301	415	222	1003	793	112	451	4205	
% of Total Cost	8%	15%	7%	10%	5%	24%	19%	3%	10%	100%	
Mark "High" or "Low"						H	H				

FigA. Monitoring Unit. The "display digits" function was removed entirely and the "Provide power" function reduced by 50%.

Item / FUNCTION	Provide power	Sequence power	Amplify signal (LP)	Amplify Signal (HP)	Tune signal	Monitor RF	Cooling	Maintainability	Support and protect	Remote control	Etc. Etc	Cost of item £	%
Ventilation U.							102	10				112	
Air Filter							9	2	9			20	
Amp. Drive			136		254	10	10	18	49			480	
Power Units	240							13	10			263	
Power Control		25			24			3	4	28		68	
Control Unit		107			115	6		34	51	30		380	
Enclosure							30	11	193			260	
Final Amp				360	1100	125	42	9	35			1800	
Cable Form	31	91					17	55		94		380	
Cont. Panel	17	36						8	35			96	
Reg. Unit	13											13	
Servo Amps					188			12				200	
Tool Kit								10				10	
Cost of Function	600	260	136	360	1689	192	216	185	411	180		4779	
% of Total Cost	12	6	3	8	35	4	4	4	9	4			
Mark 'High' or 'Low'			L	L	H								

Fig. B.10kW Amplifier. The "Tune Signal" function considered to be out of balance reacted to a creative approach to reduce by 60%.

To Dissipate Heat / Item	FUNCTION: Support & protect	Generate heat	To inter-connect	To provide appearance	To protect for transport	Cost of Item £	%
Tube Material	21.1					21.1	
Element Unit Material		19.0	2.0			21.0	
Therm: Collar "			6.9			6.9	
Therm: Cover "			3.7			3.7	
Fixing Screws			0.2			0.2	
Packing Material					2.4	2.4	
Paint Material				2.0		2.0	
Interconnector Moulding			8.0			8.0	
Earth Plate			2.0			2.0	
Lever			1.0			1.0	
Adjust			2.0			2.0	
Assembly Labour	2.6	11.2	10.3	2.1	3.4	29.6	
Cost of Function	23.7	30.2	36.1	4.1	5.8	99.9	
% of Total Cost	24	30	36	4	6		
Mark "High" or "Low"			H				

Fig. C: Tubular Heater. A simplified "interconnect" system and other modifications reduced cost by 20% and improved the product.

FUNCTION COST ANALYSIS
DESCRIPTION

Fuse Box

SHEET 1 OF 1

DATE 24-2-69

PART	FUNCTION: Mounts LInit	Holds Fuse Clips	Holds Space Fuses	Provides Insulation	Protects Fuses	Inhibits Corrosion	Allows Occess	PROTECTS CIRCUIT	Holds Fuses	Provides Connection	Protects Base	Retains Cover	COST OF PART W.I.F pehre	% COST
Base	5	4	1	2									12.0	
Cover					2	.7	1						3.7	
Fuses (6)								12					12.0	
Fuse Clips (8)									14	9			23.0	
Terminal Posts (8)		3.2								20			23.2	
Terminal Post Screws (8)										6.4			6.4	
Terminal Post Washers (8)											3.7		3.7	
Cover Screw							1.7					1.7	3.4	
Cover Screw Post							.7					.8	1.5	
Cover Screw Post Washer											.4		.4	
COST OF FUNCTION	5	7.2	1	2	2	.7	3.4	12	14	35.4	4.1	2.5	89.3	
% OF TOTAL COST	5.6	8.0	1.1	2.2	2.2	.8	3.8	13.5	15.7	39.7	4.6	2.8		
MARK HIGH OR LOW		H						L		H	H			

FIG. (3.45) FUNCTION COST MATRIX OF FUSE BOX (EXISTING DESIGN) - REF (44) (RFFER TO FIG. 3.46 & 3.47)

FUNCTION COST ANALYSIS

DESCRIPTION
FUSE BOX B

SHEET 1 OF 1

DATE 24-2-69

PART / FUNCTION	Mounts Unit.	Holds Fuse Clips	Provides Insulation	Holds Spare Fuses	Protects Fuses	Inhibits Corrosion	Allows Access	PROTECTS CIRCUIT	Holds Fuses	Provides Connection	Fixes Lucars	
Base	4	2.5	1.5									8.0
Cover				.5	.5	.5	.5					2.0
Fuses (6)								12				12.0
Fuse Clips (8)									6	6		12.0
Rivets (8)										2	4	6.0
Lucars (a) (8)										7		7.0
Lucars (b) (8)										4		4.0
COST OF FUNCTION	4	2.5	1.5	.5	.5	1.5	.5	12	6	19	4	51.0
% OF TOTAL COST	7.8	4.9	2.9	1.0	1.0	1.0	1.0	23.6	11.7	37.2	7.9	
MARK HIGH OR LOW										H		

FIG.(3·46) FUNCTION-COST MATRIX OF FUSE BOX (NEW DESIGN) - REF (44).

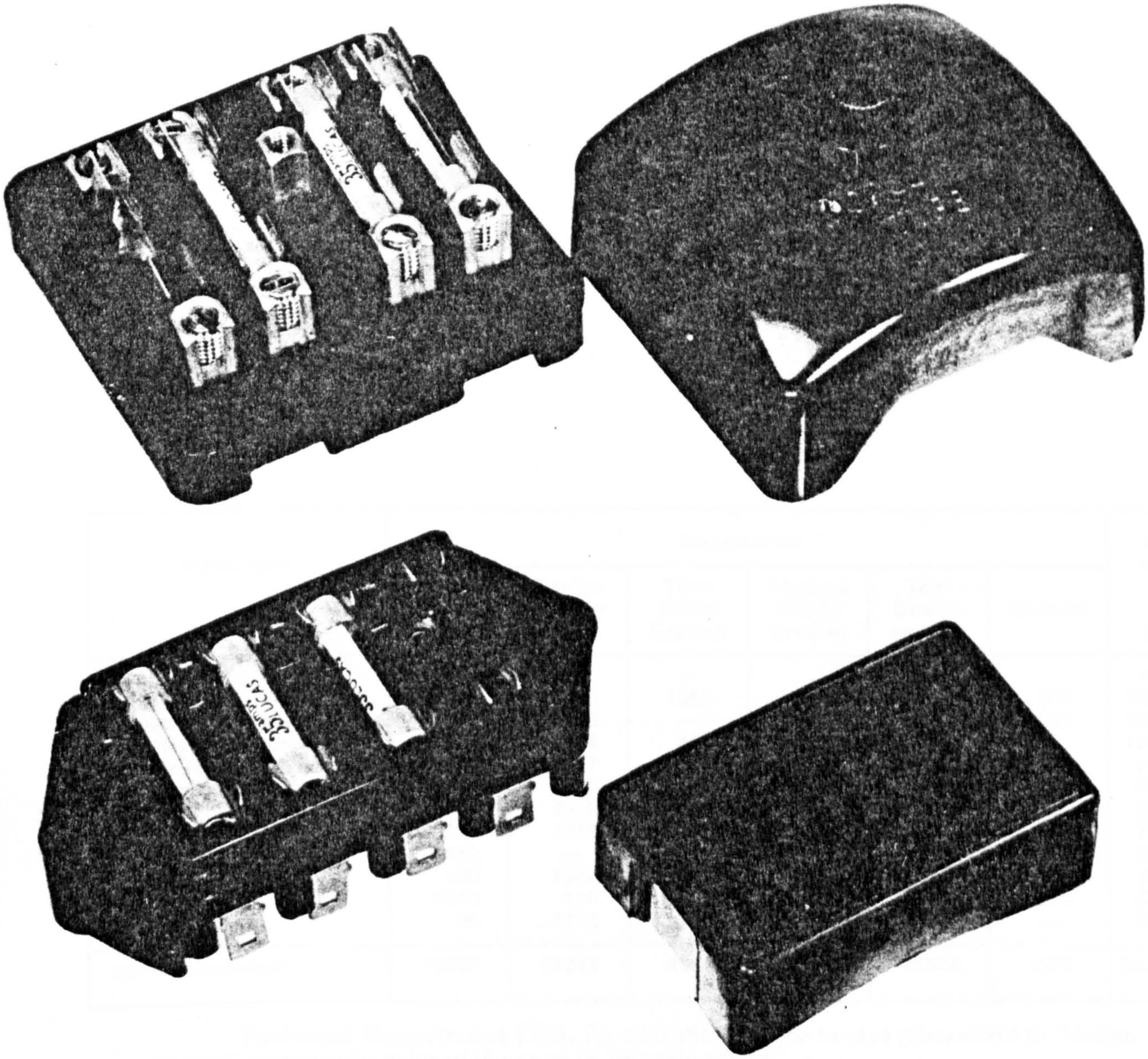

FIG 3.47 FOUR WAY FUSE BOXES "A" ABOVE; BEFORE.
"B" BELOW; AFTER.

JOSEPH LUCAS (ELECTRICAL) LTD

FUNCTION	Department						Cost of function	
	Develop-ment section	Design section	Time Study Section	Method Study section	Tool Design section	General	£	%
							K	
Provide Advice (Int)	2375	6500	1650	1224	2050	600	14.4	15.8
Provide/Prove Tools	—	110	—	—	12900	200	13.2	14.5
Advance Tech. Knowledge	1531	6724	490	1537	655	—	10.9	12.0
Provide Advice (sub cont)	190	1437	44	908	6880	—	9.5	10.5
Provide Advice (customer)	2316	3600	88	1640	805	600	9.0	10.0
Develop/Prove Products	2670	2900	350	1121	925	200	8.1	9.0
Design Products	290	6615	—	560	—	200	7.6	8.4
Provide Prod. Equipment	580	—	—	5714	—	—	6.3	7.0
Control Work	190	1944	1500	336	370	—	4.3	4.8
Test Products	3350	110	88	224	—	200	3.9	4.4
Provide Estimates	95	1173	350	560	1000	—	3.2	3.5
Cost of Department	13587	31016	4560	13892	25584	1970	90.7K	

Technical Department FCA. Re-allocation of time to give more effort to "design product" dramatically reduced the need to "provide advice".

FIG3.4 8- FUNCTION -COST-ANALYSIS TO DEPARTMENTAL COST - REF(61)

INDIVIDUALIZE & SEPARATE

FUNCTIONS

↓

USING CREATIVE THINKING

ESTABLISH OTHER OBVIOUS MEANS

FOR ACCO MPLISHING EACH FUNCTION

↓

ASSIGN APPROXIMATE COST

↓

ADD THE VALUES TO ARRIVE

TO THE TOTAL OVERALL FUNCTIONS

FIG.(3·49) LOGICAL STEPS FOR FUNCTION EVALUATION

FOR SIMPLE PARTS MILES - REF (20).

FIG.(3.50) FUNCTION EVALUATION OF STEEL SPACER STUD REF(25)

EXAMPLE : EVALUATE FUNCTION OF STEEL SPACER STUD

SPECIFICATIONS:-

THE STUD IS USED FOR FASTENING A TIMER TO AN APPLIENCE
AND TO SEPARATE TWO PARTS OF THE TIMER.

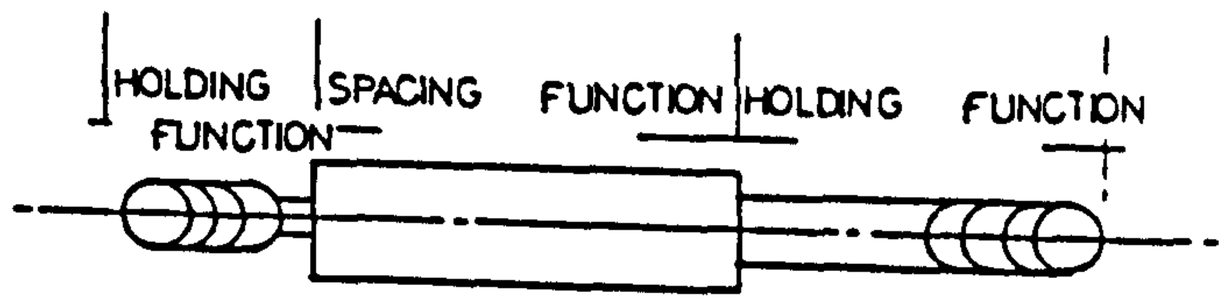

FUNCTIONS :-

1. HOLD THE 21b TIMER TO
   THE APPLIANCE
2. HOLD TIMER TO THE STUD
3. SPACE TWO PARTS OF THE TIMER

VALUE OF FUNCTIONS

HOLDING FUNCTION (NO.1) CAN BE ACCOMPLISHED RELIABLY BY A STEEL SCREW	0.5 ¢
HOLDING FUNCTION (NO.2) CAN BE ACHIEVED BY A SMALLER STEEL SCREW	0.25 ¢
THE SPACING FUNCTION CAN BE ACHIEVED BY A ROLLED SPACER	0.25 ¢
TOTAL	1 ¢

A) BLAST:

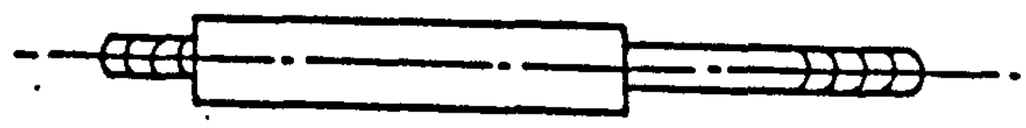

B) CREATE :START WITH .08¢ NAIL MADE ON AUTOMATIC SCREW MACHINE

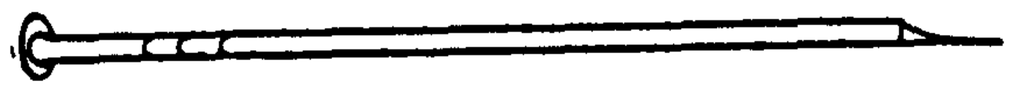

C) REFINE:

1. HEAD MUST BE MOVED DOWN SLIGHTLY ON THE SHANIC
   AND BE MADE HEXAGONAL
2. ANOTHER HEAD MUST BE MADE IN THE MIDDLE OF THE NAIL
3. THREADS MUST BE ROLLED IN EACH SIDE OF THE NAIL

A NEW DESIGN EVOLVED AND WERE ESTIMATED BY SUPPLIER TO COST 0.8¢

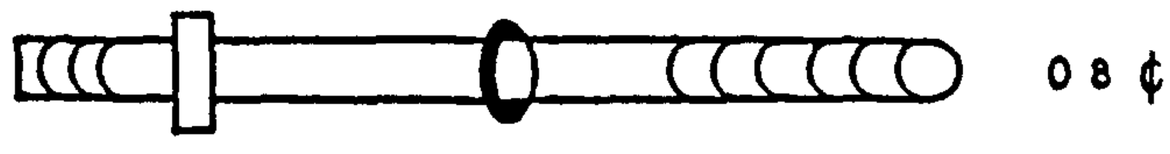

VENTILATION SCREEN

WELD MESH PANEL $ 6.00

FUNCTIONS : ALLOW VENTILATION
FACILITATE MAINTENANCE
EXCLUDE SUBSTANCE
PLEASE CUSTOMER

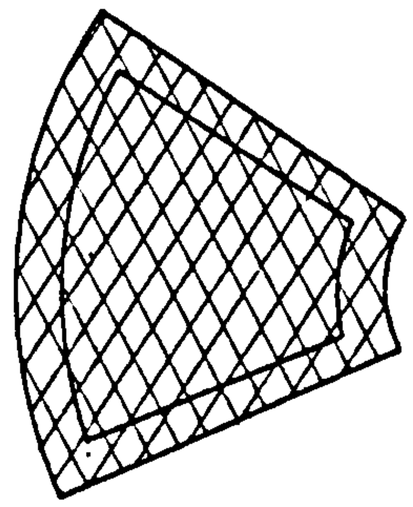

RE ARRANGEMENT OF FUNCTIONS FOR EVALUATION

1. EXCLUE SUBSTANCE
2. ALLOW VENTILATION
3. FACILITATE MAINTENANCE
4. PLEASE CUSTOMER

FUNCTIONS EVALUATED FOR COMPARISON

FUNCTION(1): EXCLUDE SUBSTANE (SHEET METAL	$ 0.15 ea
FUNCTION(2): ALLOW VENTILATION (OPEN UP AND MODIFY SHEET METAL) ADD COST	$ 0.15
FUNCTION(3): FACILITATE MAINTENCE (SPRING CLIP OPERATED BY ONE HALF TURN OF SCRES DRIVED	$ 0.10
FUNCTION(4): PLEASE CUSTOMER (APPEARANCE PAINT)	$ 0.10
TOTAL VALUE OF ALL FUNCTIONS ACCOMPLISHED	$ 0.50

NEW DESIGN EVOLVED AT NEW COST $ 1.25

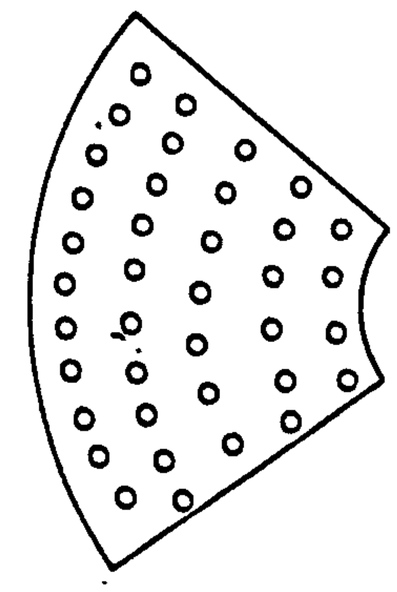

FIG.(3·51) FUNCTION EVALUATION OR A VENTILATION SCREEN OF ELECTRIC MOTOR REF(20)

FIG 3.52 -FUNCTION EVALUATION OF COIL SUPPORT ASSEMBLY-REF(57)

FUNCTIONS:-

POSITIONS, SUPPORTS AND PROTECTS COIL AND PROVIDES FASTENING TO INTERIOR OF BLACK BOX.
MAXIMUM COMPRESSIVE OF TENSILE LOAD IS 5 lb.

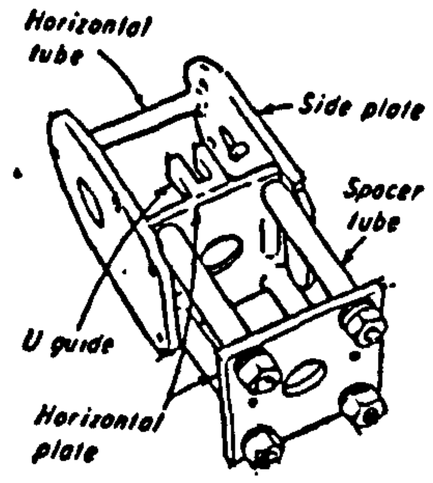

A) FUNCTION ANALYSIS:

FUNCTIONS	BASIC	2ND
PROVIDE POSITIONING		
PROVIDE POSITIONING		
PROVIDE SUPPORT		
PROVIDE TESTING		

SPECIFICATIONS
GENERAL AND SPECIFIC

GENERAL: MUST BE RIGID, LIGHT WEIGHT.
SPECIFIC: MAX COMP. OR TENS LOAD 5 lb.
BOLTED TO INTERIOR OF BLACK BOX.

B) ALLOCATION OF FUNCTIONS TO PARTS:-

LIST OF PARTS	BASIC	2ND
SIDE PLATES		
HORIZONTAL TUBE		
HORIZONTAL PLATES		
SPACER TUBES(4)		
U GUIDE		
BOLTS NUTS WASHERS(4EACH)		

C) ESTABLISHMENT OF ALTERNATIVE IDEAS:-

BASIC FUNCTION : SUPPORT COIL

ALTERNATIVE IDEAS	ESTIMATED COST $
WIRE FORM	2.10
STAMPED AND FORMED TUBING	2.00
MODIFIED CHANNEL	1.75
SHELL CASTING	3.25
STAMPED PLATE,FORMED PEENED	1.50
MOLDED PLASTIC	2.50
WELDMENT	4.00

D) ANALYSIS OF ALTERNATIVES

IDEA 1 - STAMPED FORMED, PEENED

GOOD	BAD
- LOW COST	TOOL COST
- MADE FROM STRIP	
- FEWER PARTS	
-ADAPTER TO AUTO- MATIC EQUIPMENT.	
- LIGHT WEIGHT (ACCEPTED)	

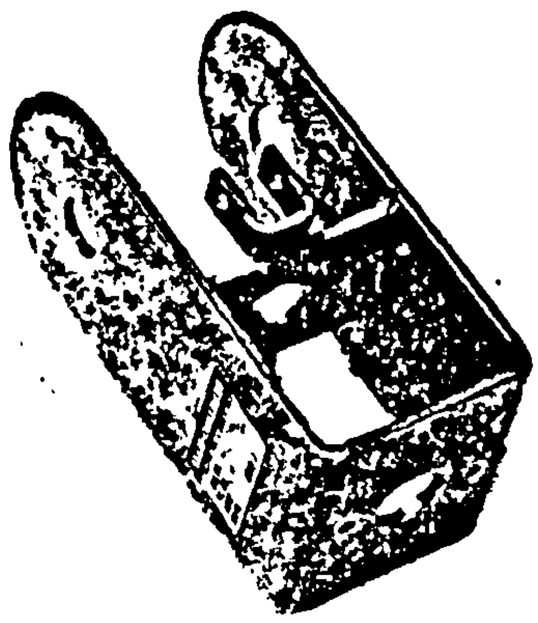

IDEA 2 MODIFIED CHANNEL

GOOD	BAD
LOW COST	INCONSISTENT TOLERANCES
	HEAVY WELDING OPERA TION EMPENSIVE. (REJECTED).

FIG.(3·52) FUNCTION EVALVATION OF COIL SUPPORT ASSEMBLY-REF (57) .

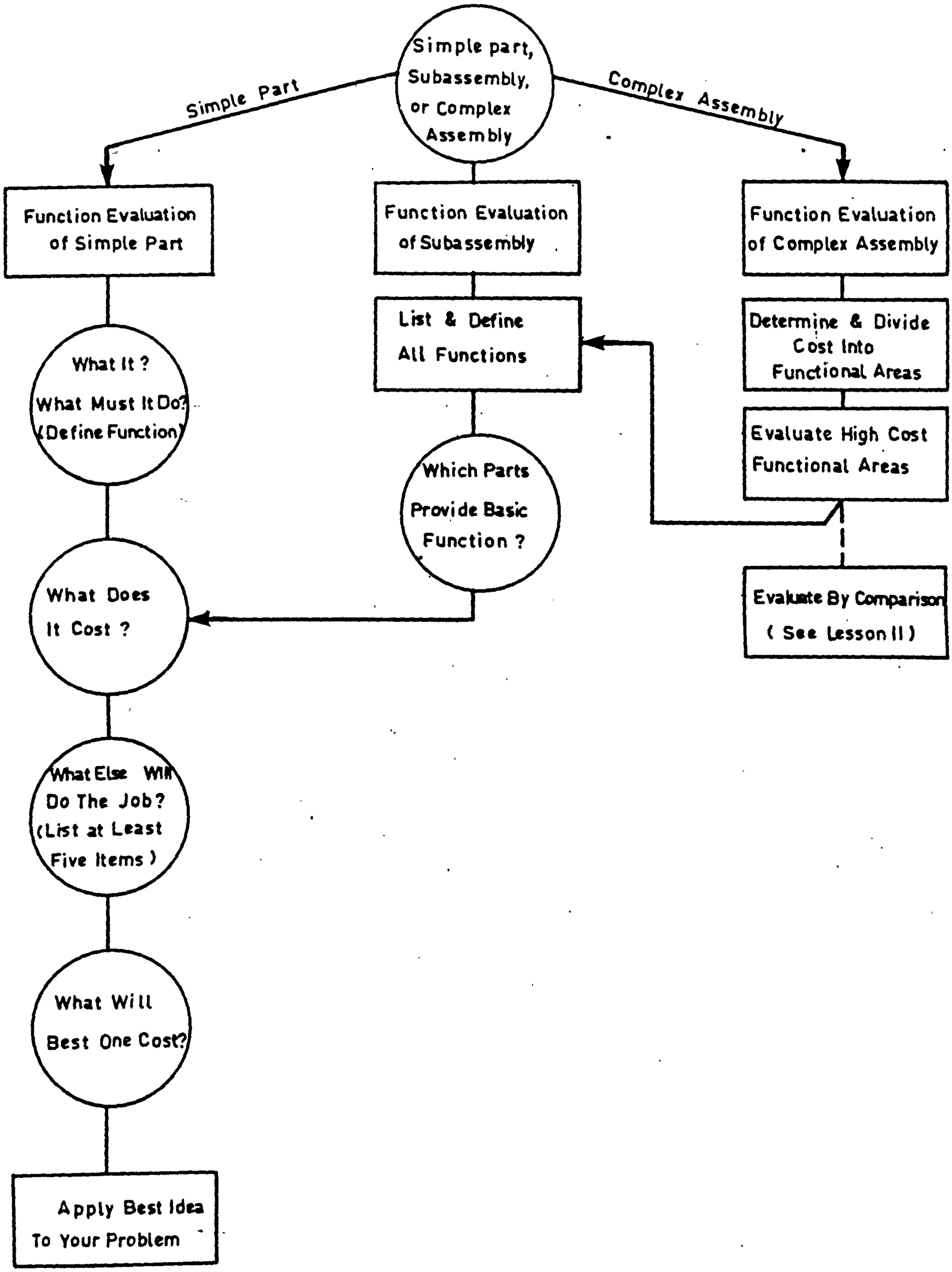

FIG.(3·53) PROCEDURE FOR FUNCTION EVALUATION - REF (57) .

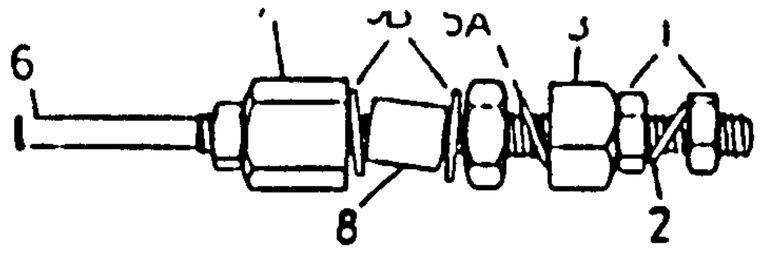

The connector

30 AMPS CURRENT			CONDUCT CURRENT				30 AMPS CURRENT		
INPUT			BASIC FUNCTION ·				OUTPUT		
No	QUAN.	PART	FUNCTION(S) VERB	NOUN	FUNCTIONAL PART BASIC	SECOND	LEVEL ASSY. BASIC	SECOND	NOTES
1	2	¾ BRASS NUTS	PROVIDE PROVIDE CONDUCT APPLY	CONNECTION. LOCATION CURRENT PRESSURE	✓	✓ ✓ ✓		✓	MUST BE READILY DISCONNECTABLE
2	1	¾" LOCK WASHER	TRANSMIT INDUCE RESIST	PRESSURE FRICTION MOVEMENT	✓	✓ ✓		✓	SUBJECT TO SHIPPING VIBRATION
3	1	¾" BRONZE NUT	APPLY PROVIDE	PRESSURE LOCATION	✓	✓		✓	
4	1	¾" LOCK WASHER	TRANSMIT INDUCE RESIST	PRESSURE FRICTION MOVEMENT	✓	✓ ✓		✓	SUBJECT TO SHIPPING VIBRATION
5A	1	RECESSED WASHER	PROVIDE TRANSMIT	LOCATION PRESSURE	✓	✓		✓	
5B	2	¾" GASKETS	PROVIDE PROVIDE	SEAL LOCATION	✓	✓		✓	MUST SEAL 3 p.s.i
6	1	¾" STUD	TRANSMIT PROVIDE CONDUCT RESIST PROVIDE	PRESSURE LOCATION CURRENT MOVEMENT CONNECTION	✓	✓ ✓ ✓ ✓	✓		
7	1	SPECIAL NUT	PROVIDE CONDUCT APPLY PROVIDE	LOCATION CURRENT PRESSURE CONNECTION	✓	✓ ✓ ✓		✓	MUST BE READILY DISCONNECTABLE
8	1	COPPER TUBE	PROVIDE CONDUCT PROVIDE	CONNECTION CURRENT LOCATION	✓	✓ ✓		✓	MUST BE READILY DISCONNECTABLE

(3·54(a) Fundional worksheft .

REF LETTER	FUNCTIONS	WEIGHT
A	PROVIDE CONNECTION	9
B	INDUCE FRICTION	2
C	APPLY PRESSURE	1
D	TRANSMIT PRESSURE	9
E	PROVIDE SEAL	11
F	CONDUCT CURRENT	10
G		

(3·54(b) Evalvation svmmary .

	B	C	D	E	F	G	H	I	J	K	L	M	M--
A	A·3	A·2	A·3	E·2	F·3								
B		B·1	B·1	E·3	F·3								
C			C·1	E·3	F·3								
D				E·3	F·3								
E					F·3								

(3·54 (C) Numerical evaluation .

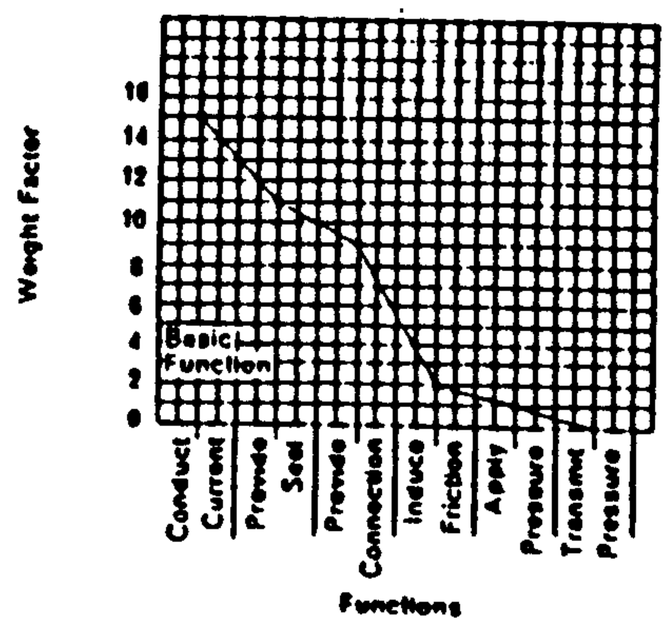

(3·54(D) Numerical evalvation graph .

FIG. (3·54) NUMERICAL EVALUATION OF FUNCTION RELATION SHIP OF CONNECTOR - REF (62) .

ROTARY FORCE		CONVERT ENERGY				KINETIC ENERGY		
INPUT		BASIC FUNCTION				OUTPUT		
QUAN.	PART	FUNCTION(S) VERB	NOUN	FUNCTIONAL PART BASIC	FUNCTIONAL PART SECOND	LEVEL ASSY. BASIC	LEVEL ASSY. SECOND	NOTES
1	TAPPER LOCK BUSHING	PROVIDE PROVIDE PROVIDE TRANSMIT PROVIDE	SUPPORT ADJUSTMENT LOCATION FORCE CONNECTION	✓	✓ ✓ ✓ ✓		✓	
1	KEY	TRANSMIT PROVIDE	FORCE LOCATION	✓	✓		✓	
3	CAP SCREWS	TRANSMIT PROVIDE ASSIST	FORCE LOCATION DISASSEMBLY	✓	✓ ✓		✓	
1	LOCK WASHER	INDUCE TRANSMIT	FRICTION FORCE	✓	✓		✓	
1	HUB	TRANSMIT PROVIDE PROVIDE	FORCE SUPPORT LOCATION	✓	✓ ✓		✓	
6	CAP SCREWS	TRANSMIT PROVIDE PROVIDE	FORCE LOCATION SUPPORT	✓	✓ ✓		✓	
1	BOOK PLATE	PROVIDE PROVIDE TRANSMIT	LOCATION SUPPORT FORCE	✓	✓ ✓		✓	
1	SHROUD	PROVIDE PROVIDE DIRECT	LOCATION SUPPORT AIR	✓	✓ ✓		✓	
12	BLADES	PROVIDE PROVIDE TRANSMIT CONVERT	LOCATION SUPPORT FORCE ENERGY	✓	✓ ✓ ✓	✓		

(3·55)(a) Functional worksheet.

Evaluation Summary

KEY LETTER	FUNCTIONS	WEIGHT
A	PROVIDE CONNECTION	8
B	TRANSMIT FORCE	7
C	INDUCE FRICTION	3
D	PROVIDE SUPPORT	3
E	PROVIDE LOCATION	8
F	DIRECT AIR	9
G	CONVERT ENERGY	10
H		
I		
J		
K		
L		
M		
N		

(3·55)(b) Evalvation svmmary.

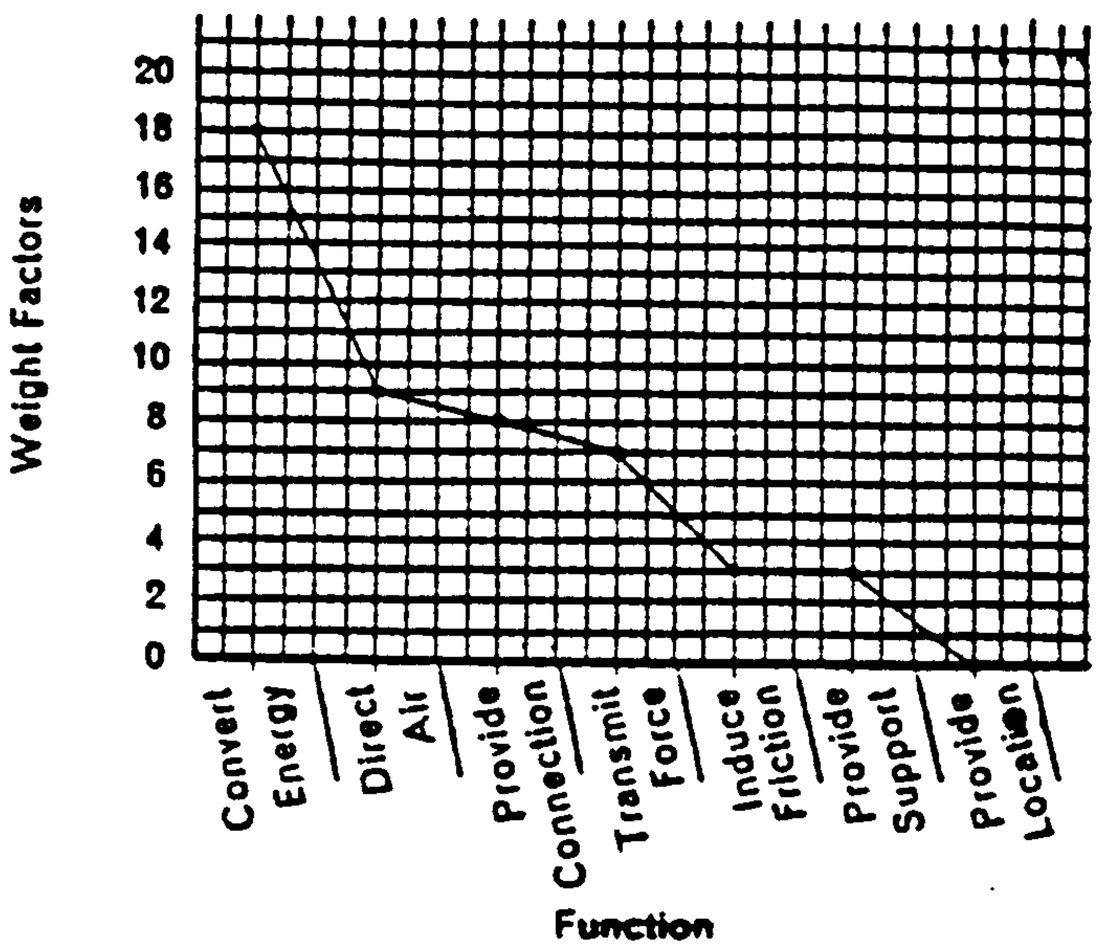

(3·55)(c) Numerical evalvation graph.

FIG.(3·55) NUMERICAL EVALUATION OF FUNCTION RELATIONSHIP OF ROOF EXHAUST FAN – REF(62)

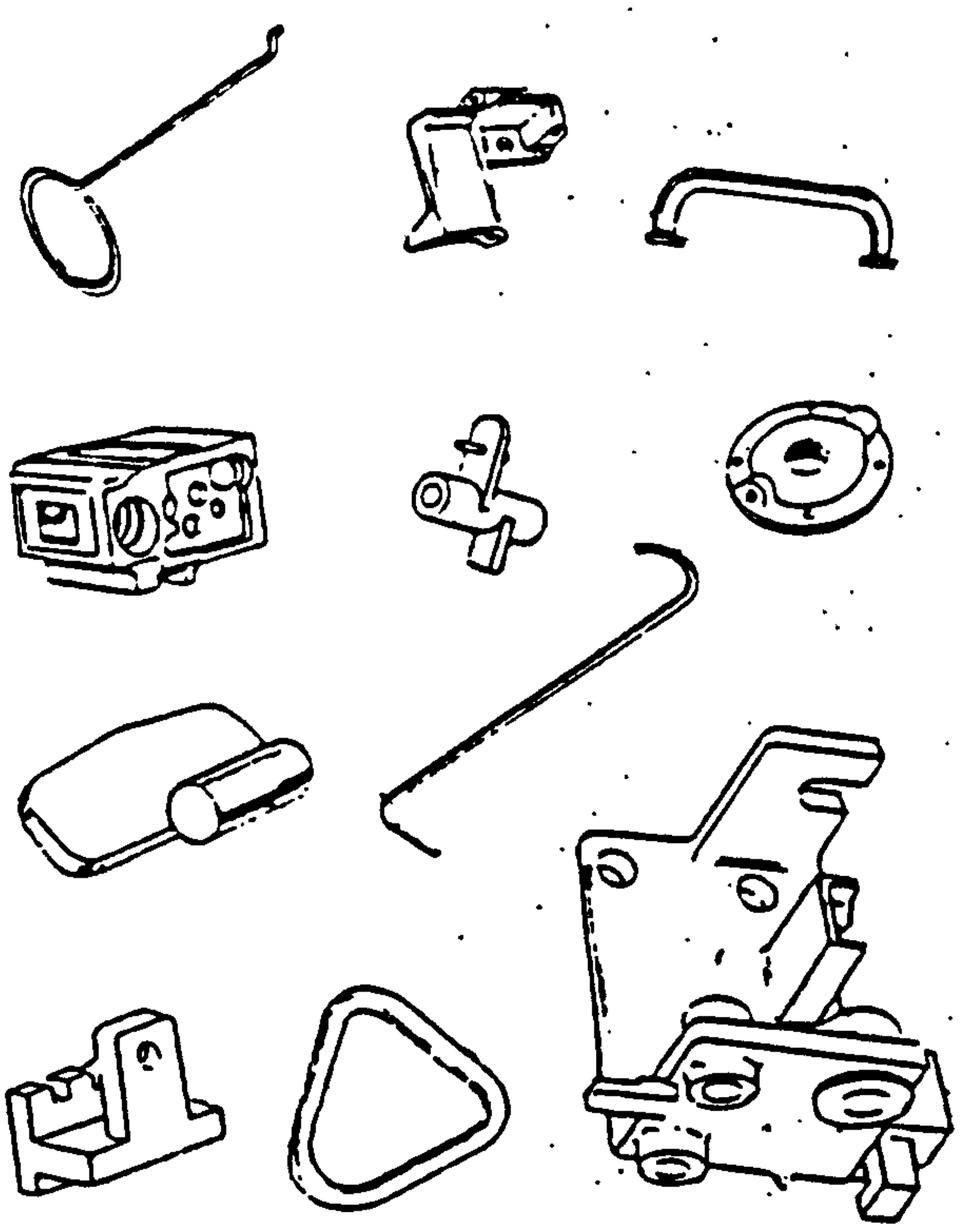

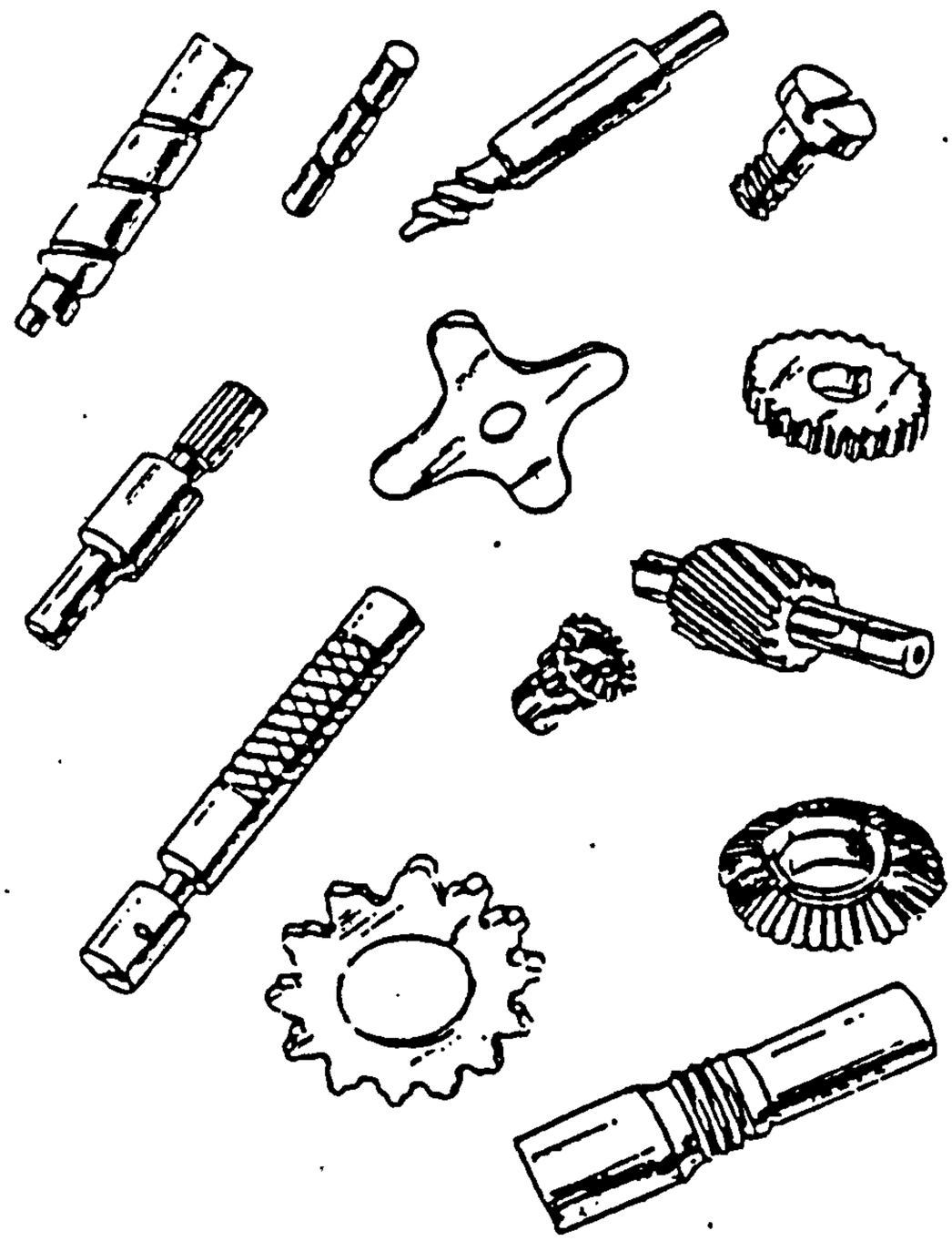

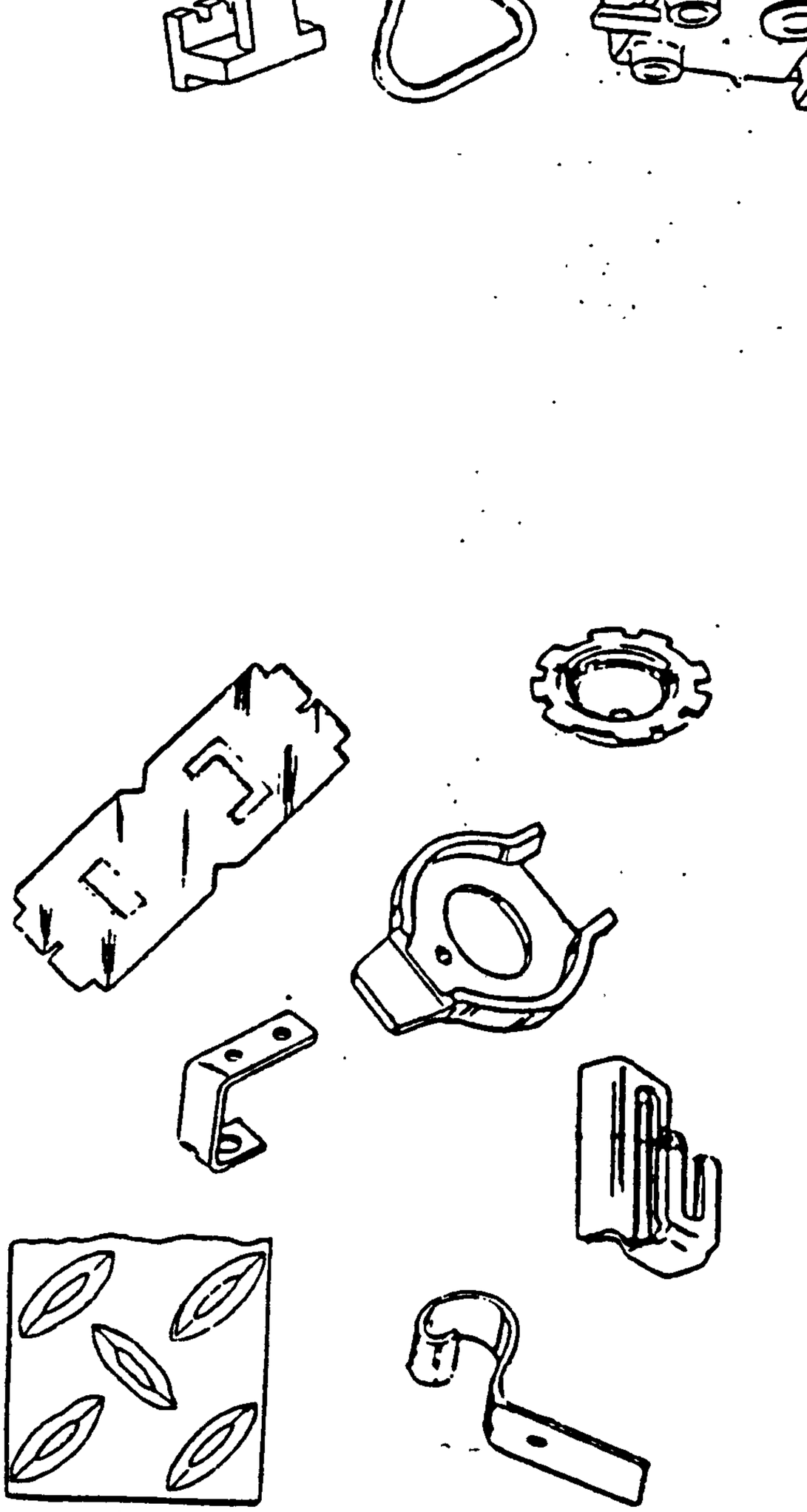

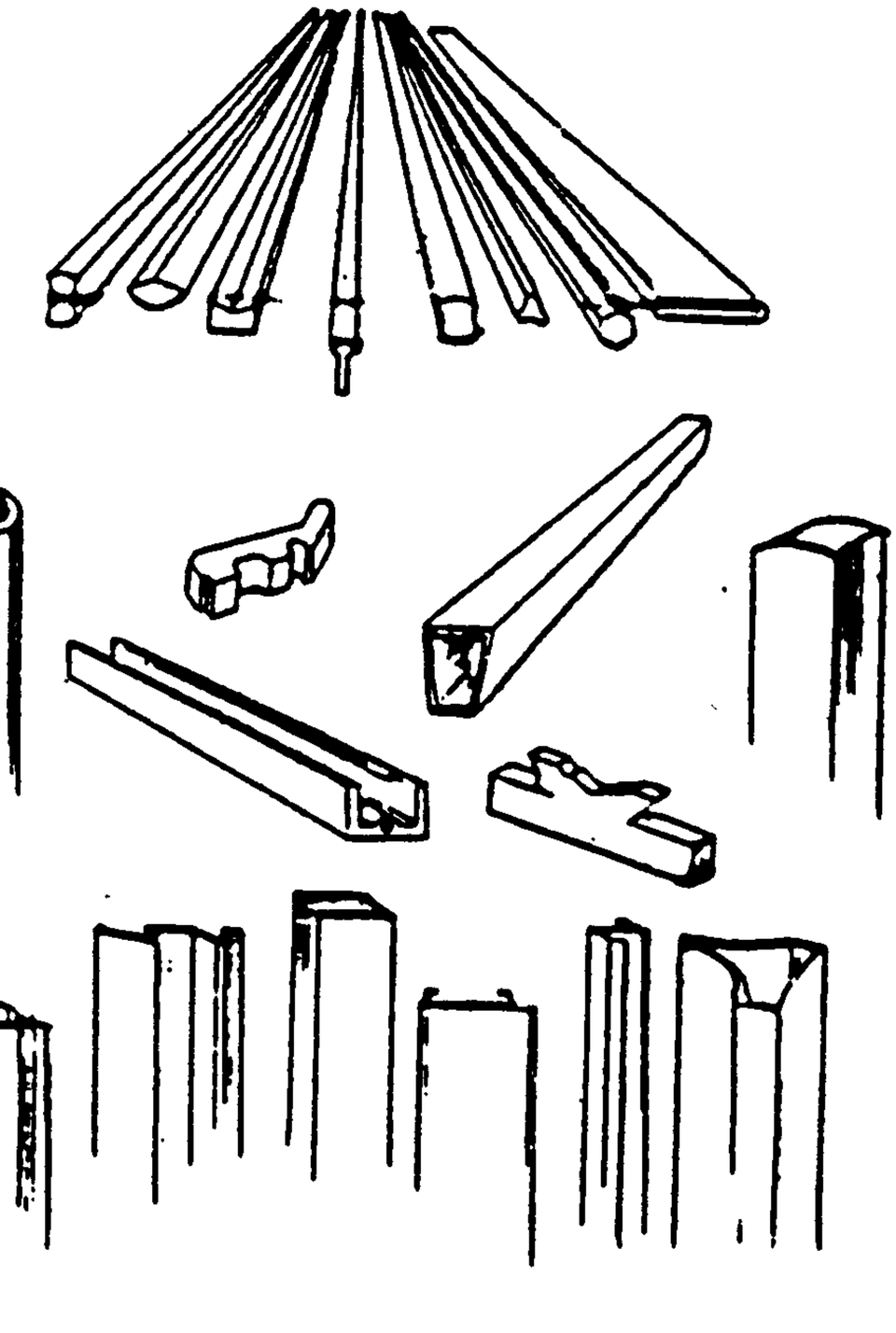

FIG. (3·56) CATEGORIES OF SHAPES .

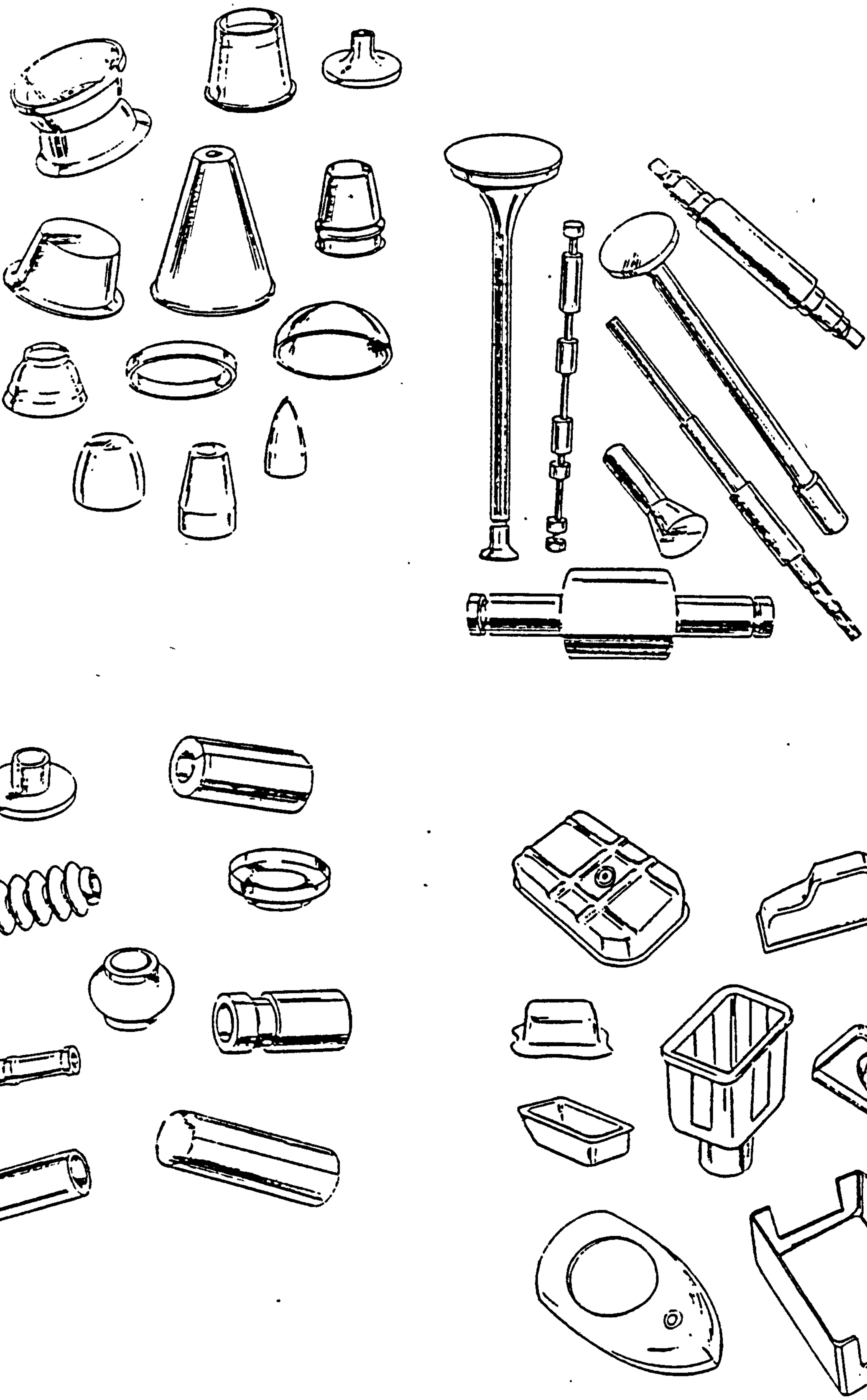

FIG. (3.57) CATEGORIES OF SHAPES (CONT.) REF 56.

	INDEX	PROCESS	COMMENTS	RAW MATERIAL	MAXIMUM SIZE	MINIMUM SIZE	GENERAL TOLERANCE	SURFACE FINISH (RMS)	PIECES PER/HOUR	Tt
	II - 1 III - 1	Sand Casting	Most economical process for low production - parts usually require machining.	Ingot	Limited in size only by the foundry capacity.	Less than one pound.	± 1/16 to ± 1/8	250 - 1000	Up to 30	
	II - 1 III - 2	Die Casting	excellent for intricate - close tolerance - high production - alum., zinc, magnesium, copper alloys	Ingot	Up to 100 pounds 10# average	Less than one ounce	±002 to ±010	32 - 125	Up to 550	
	II - 1 III - 7	Centrifugal Casting	Basically a pressure method for long or large hollow shapes; produces sound castings	Ingot	1,000 pounds 54" O.D. x 342" length	2" I.D. x 1/4" wall thickness	± 1/16 to ± 1/8	125 - 1000	Up to 50	
	II - 1 III - 6	Permanent Mold Casting	Widely used for high strength aluminum, gray iron and copper base alloys	Ingot	300 pounds	Less than one pound	±.010 to ±.030	125 - 250	10 - 360	
	II - 1 III - 5	Shell Molding	Close tolerance and excellent surface finish	Ingot	Maximum 200# 25# average	Less than one pound	± 005 to ± 015	32 - 250	10 - 75	
	II - 1 III - 3	Investment Casting	Best for intricate shapes - good for casting hard-to-machine metals	Ingot	Maximum 100# generally less than 10 pounds	Less than one pound	± 003 under 1" ± 005 over 1"	63 - 125	80 - 1500/day	
	II - 1 III - 4	Plaster Mold Casting	Similar to permanent mold casting, except molds are plaster-base material	Ingot	Standard flask size 12"x18"x4" depth (about 15#)	Less than one pound	±005 to ±015	32 - 125	5 - 10	
	II - 3 III - 13	Die Forging	Increases steel strength; used for high stress parts	Bar, Rod	1000 pounds	Less than one pound	± 008 to ± 1/8	125 - 500	10 - 400	
	II - 9 III - 44	Powder Metallurgy	Best for parts under 4" in diameter - larger parts can be made	Powder	8" dia. x 8"lg	Less than 1/16" dia.	± 001 to ±005	32 - 63	100 - 4,000	
	II - 3 III - 17	Impact Extrusion	Aluminum, zinc, copper alloys and some steel parts	Bar, Rod	5" dia. x 12" length	.004 wall thickness, less than one pound	± 0005 wall thickness. ± 002 general	8 - 250	200/hr & more on small parts	
	II - 3 III - 16	Continuous Extrusion	Good for complex cross-section contours	Billet	12" dia.	.050 sections	±003 to ±020	63 - 125	2 - 700 FPM	
	II - 3 III - 19	Roll Forging	Good for long narrow parts - requires finish machining - a hot working process	Bar, Rod	23 sq. inch cross section 75" length	1 1/2" length	Avg.dia+1/32-1/64 lg.dia.+3/32-1/32 lengths broad	125 - 500	30 - 100	
	II - 3 III - 14	Hot Upsetting	Complex, small parts, requires additional machining	Bar, Rod, Wire	10" dia. x 8" length	1/16" dia up	± 003 to ± 1/32	125 - 250	Up to 2500	
	II - 2 III - 9	Vertical Turret Lathe	For small quantity Large parts	Fabrications, plate, castings, forgings	4, 5, 6 ft dia-meter tables common	4" dia. practical	±001 to ±015	125 - 250	1 - 10	
	II - 2 III - 9	Horizontal Turret Lathe	For general machining, small medium production	Bar, Rod, Tube, Preforms	3' dia. x 8' lengths	1/2" dia.	±001 to ± 015	125 - 250	1 - 20	
	II - 2 III - 12	Automatic Screw Machine	Small high production parts	Rod, Bar	2" dia.	1/16 dia.	±0005 to ±003	63 - 125	20 - 100	
	II - 2 III - 12	Swiss Screw Machine	Small precision parts, excellent finish	Rod	1/2 dia.	1/32 dia.	± 0002 to ± 001	32 - 125	30 - 300	
	II - 3 III - 18	Rotary Swaging	Excellent for symmetrical parts	Rod, Tube	3 3/4" dia. rods 7" dia tubing	1/16" dia rod .005" dia. wire	± 001 to ±010	16 - 125	100 - 600	
	II - 5 III - 31	Crush Grinder	High production, precision parts, excellent tolerance control	Rod, Wire, Bars	16" dia x 80" length	1/16 dia.	.0005 or less	8 - 32	20 - 1200	
	II - 3 III - 15	Cold Heading	High production method, exacting tolerance, metal improvement	Bar, Rod, Wire	1" dia x 9" length	.020 dia.	±002 or better	16 - 63	2,000 - 20,000	

TABLE (3.58)

PROCESSES	METHODS	COMMENTS	RAW MATERIAL	MAXIMUM SIZE	MINIMUM SIZE	TOLERANCE	PIECES PER/HOUR	SURF FINI
SAND CASTINGS	Loose Patterns	Low Production Changeable Design Most Designs Require Considerable Machining	All Ferrous and Non-Ferrous Metals	75 pounds steel	Less than one pound	± 1/16 inch to ± 1/8 inch	10 - 15/Day	250 - 1,(
	Gated Loose Patterns			25 pounds aluminum			20 - 150/Day	
	Match Plate Patterns						25 - 250/Day	
	Cope & Drag Pattern Plates			500 pounds steel 170 pounds aluminum	Less than one pound		5 - 100/Day	
	Loose Patterns Floor Moldings		Usually alloy Steel	Restricted only by handling equipment		±1/4 inch to ±3/4 inch	10 - 100 hours per casting	
DIE CASTING	Hot Chamber	For stable design Low machining. Easily plated with minimum polishing required Multiple cavity dies can increase production considerably	Tin, Lead, Zinc alloys	100# Zinc	Less than one ounce	±003 to ±005 per inch (small parts) Add ±0015 to ±003 inch per inch (large parts)	Up to 550/Hr	32 - 125
	Cold Chamber		Copper, Alum., Lead, Zinc, Mag. Alloys	65 pounds Aluminum			Up to 250/Hr	
INVESTMENT CASTING	Wax Patterns	High Accuracy Intricate Shapes Moderately High Production Sound Castings	Most ferrous and non-ferrous metals	25 pounds	Less than one ounce	±003 to ±005 per inch (small parts) - add ±0015 to ±003" per inch (lg. parts)	300/Day	63 - 12
	Plastic Patterns			2 pounds	Less than one ounce		1500/Day	60 - 90
	Frozen Mercury Patterns	Not in common use today		25 pounds	Less than one ounce	±005 to ±010 per inch	80/Day	60 - 90
PLASTER MOLD CASTING	Plaster Mold Casting	Low Machining Good Finish Low Tooling Cost Sound Castings	Non-Ferrous Metals	2000 pounds	Less than one ounce	±005 to ±010 per inch	90 - 450/Wk	32 - 125
SHELL MOLD CASTING	Shell Mold Casting		All Ferrous & Non-Ferrous Metals	200 pounds	Less than one pound	±003 to ±005 per inch	10 - 75/Hr	32 - 500
PERMANENT MOLD CASTING	Gravity Casting		Grey iron and Non-Ferrous	20 pounds iron 100 pounds non-ferrous	Less than one pound	±015 to ±060	10 - 30/Hr	125 - 2
	Rotary Machining Casting		Grey iron and Non-Ferrous	20 pounds iron 100 pounds non-ferrous	Less than one pound	±015 to ±060	120 - 360/Hr	125 - 2
CENTRIFUGAL CASTING	Horizontal Centrifugal Casting	Long Hollow Tubes	All Ferrous & Non-Ferrous Metals	4 ft. dia. 30 ft. length	4" dia. 4" length	±1/16 to ±1/8	8 - 50/Hr	125 - 1
	Vertical Centrifugal Casting	Short Hollow Tubes	All Ferrous & Non-Ferrous Metals	6 ft. dia 2 ft. length	4" dia. 4" length	±1/16" to ±1/8"	1 - 10/Hr	125 - 1
SEMI-CENTRIFUGAL CASTING	Semi-Centrifugal Casting	Disks, Gears, etc.	All Ferrous & Non-Ferrous Metals	6 ft. dia. 1 ft. length	4" dia. 2" length	±1/16" to ±1/8"	1 - 10/Hr	125 - 1
CENTRIFUGE CASTING	Centrifuge Casting	Multiple Parts on Tree with Center Sprue	All Ferrous & Non-Ferrous Metals	150 pounds	Less than one pound	+1/16" to ±1/8"	1 - 1200/Hr	125 - 1

TABLE (3·59)

Benefits / Weightings / CHOICES	Smothness of Surface finish B1	Economy of production B2	Dimentional accuracy B3	Lightness of weight. B4	VALUE
	W_1 0.2	W_2 0.2	W_3 0.5	W_4 0.1	
C_1	78 e_{11} 15	70 e_{12} 14	74 e_{13} 37	72 e_{14} 7	V_1 74
C_2	75 e_{21} 15.	90 e_{22} 18	70 e_{23} 35	90 e_{24} 9	V_2 77
C_3	90 e_{31} 18.	78 e_{32} 15.	90 e_{33} 45	88 e_{34} 8.8	V_3 87
C_4	75 e_{41} 15.	81 e_{42} 16.	74 e_{43} 37	90 e_{44} 9.00	V_4 77
C_5	75 e_{51} 15.	71 e_{52} 14.	74 e_{53} 37	70 e_{54} 7.00	V_5 73

TABLE (3-60) DECISION MATRIX FOR A COMPLEX WAVE GUIDE - REF (56).

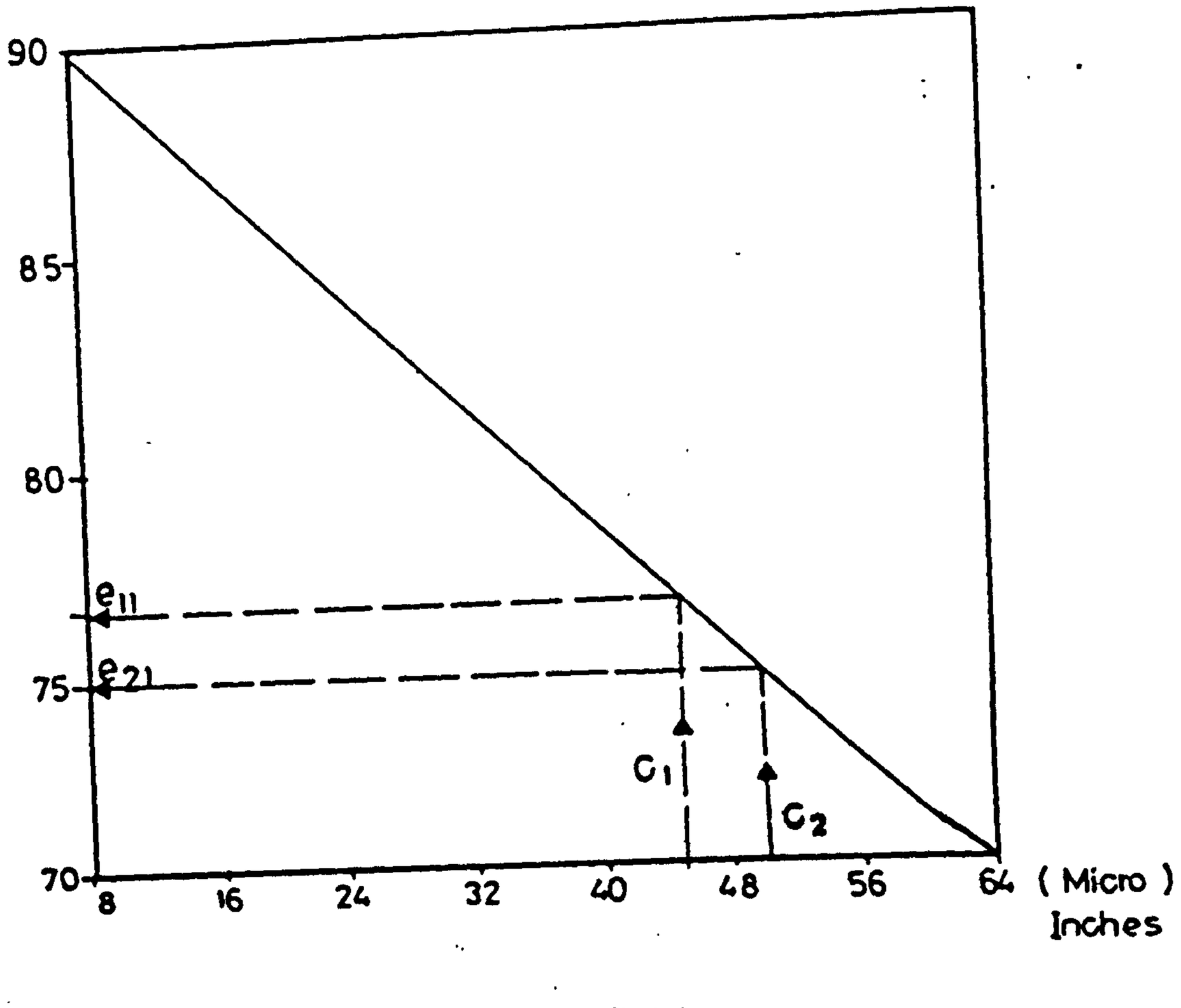

FIG.(3·61) NORMALISATION CHART FOR OBTAINING THE EFFICIENCIES OF THE VARIOUS ALTERNATIVES FOR THE DECISION MATRIX - REF (56).

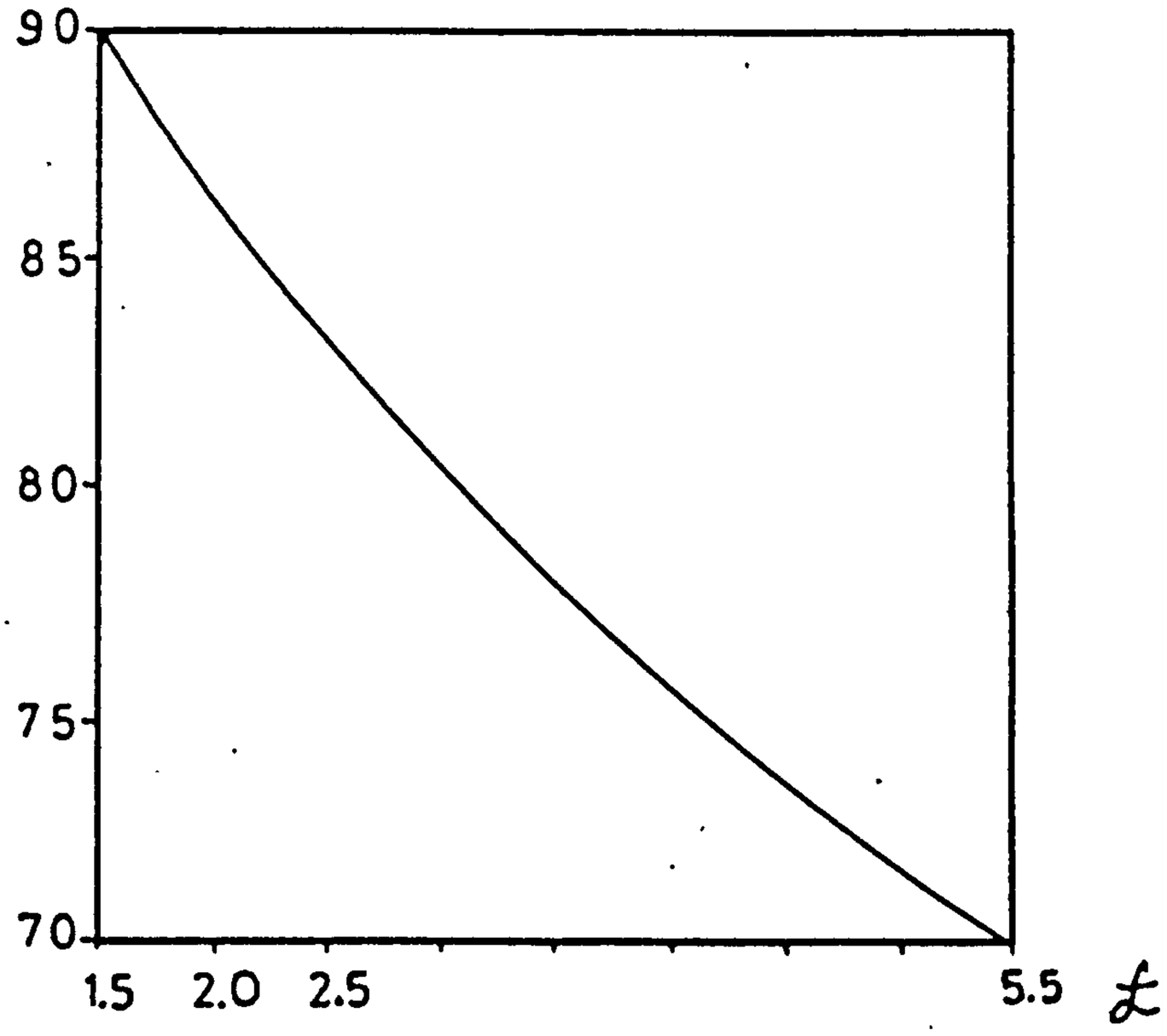

a _ ECONOMY OF PRODUCTION

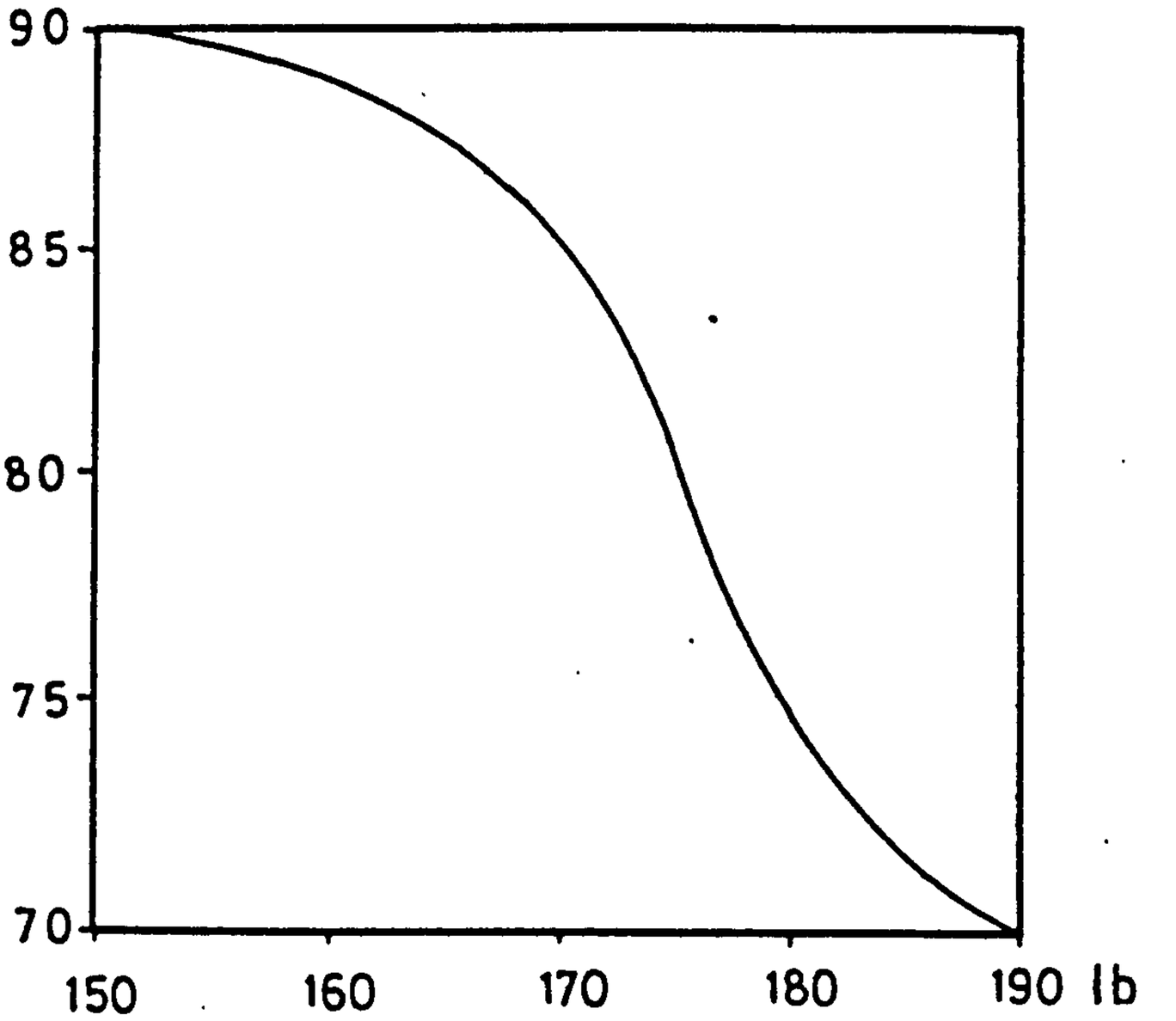

b _ LIGHTNESS OF WEISHT

FIG.(3·62) NORMALISATION CHARTS TO OBTAIN THE EFFICIENCIES OF THE VARIOUS ALTERNATIVES FOR THE DECISION MATRIX - REF (56).

Benefits / Weightings / CHOICES	Factory Load. 0.1	Tachnical Commu-nication 0.2	Price Advantage 0.4	Prompt Delivery. 0.3	VALUE ↓
C_1 Make ALL	90 / 9	90 / 18	70 / 28	90 / 27	82.00
C_2 Make 80 % Buy 20 %	86 / 8.6	70 / 14	72 / 28	87 / 76	77.30.
C_3 Make 60 % Buy 40 %	82 / 8.2	71 / 14.2	74 / 29	82 / 24	76.76
C_4 Make 40% Buy 60%	78 / 7.8	73 / 14.6	78 / 31.	75 / 22	76.07
C_5 Make 20% Buy 80%	74 / 7.4	76 / 13	82 / 33	71 / 21	76.94
C_6 BUY ALL	70 / 7.	80 / 16.	90 / 36	70 / 21	80.00
Another Alternative.					

TABLE (3·63) MAKE OR BUY DECISION MATRIX FROM REF (56).

REV NO 0

946 A 555

CONT ON SHEET SH NO

TITLE

RELATIVE MACHINING COST

SURFACE - FINISH

CONT ON SHEET SH NO.

FIRST MADE FOR

REVISIONS

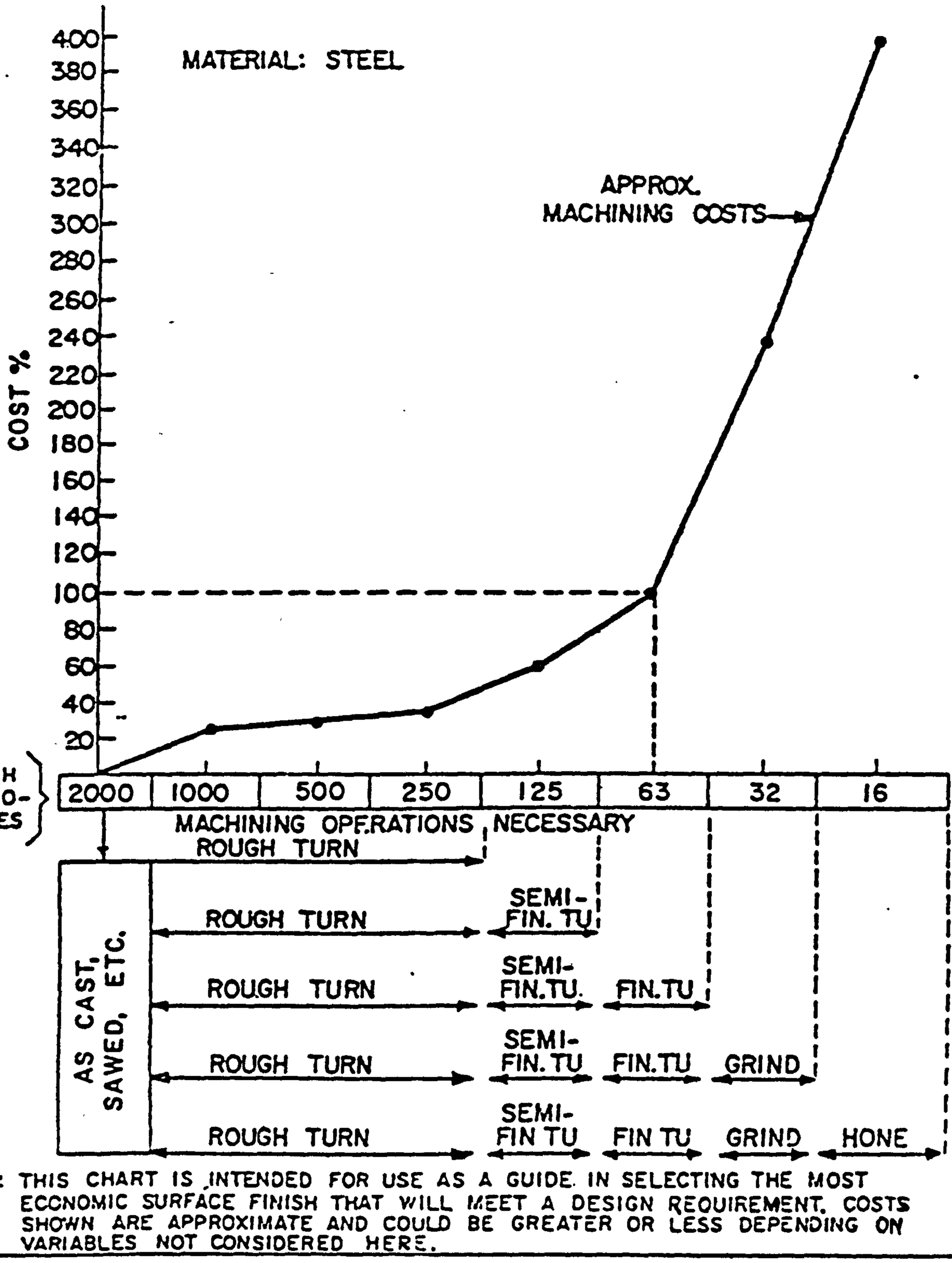

NOTE: THIS CHART IS INTENDED FOR USE AS A GUIDE IN SELECTING THE MOST ECONOMIC SURFACE FINISH THAT WILL MEET A DESIGN REQUIREMENT. COSTS SHOWN ARE APPROXIMATE AND COULD BE GREATER OR LESS DEPENDING ON VARIABLES NOT CONSIDERED HERE.

40-27

PRINTS TO

FIG.(3·64)(A) TYPICAL COST INFORMATION - REF (22) .

DEPT. 0

946A 556

COST OR SHEET SH. NO.

TITLE

RELATIVE MACHINING COST TOLERANCE

COST OR SHEET SH. NO.

FIRST MADE FOR

REVISIONS

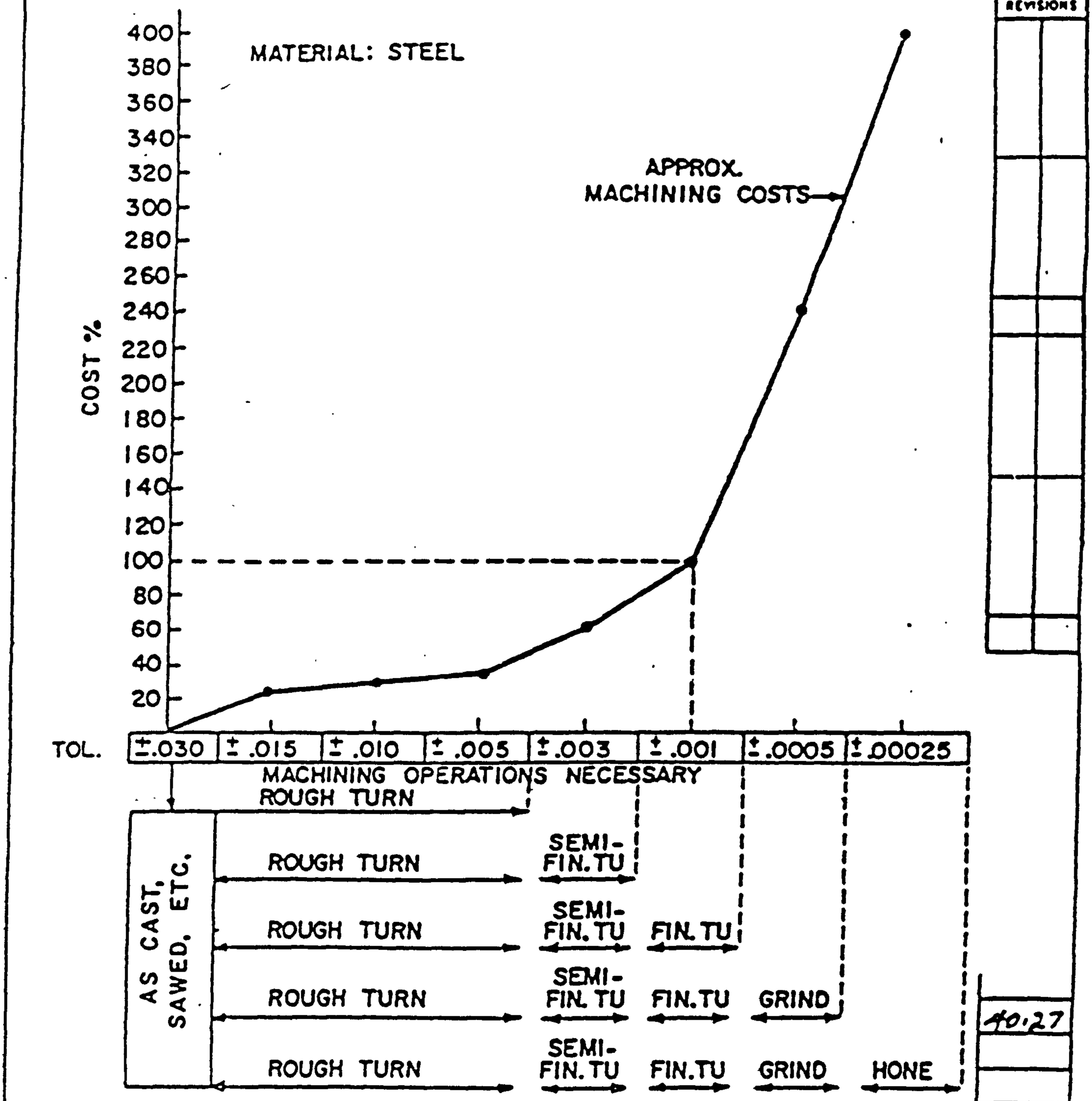

NOTE: THIS CHART IS INTENDED FOR USE AS A GUIDE IN SELECTING THE MOST ECONOMIC TOLERANCE THAT WILL MEET A DESIGN REQUIREMENT. COSTS ARE APPROXIMATE AND COULD BE GREATER OR LESS DEPENDING ON VARIABLES NOT CONSIDERED HERE.

40.27

PRINTS TO

FIG.(3·64)(B) TYPICAL COST INFORMATION - REF (22).

APPROXIMATE RELATIONSHIP BETWEEN SURFACE FINISH & COST

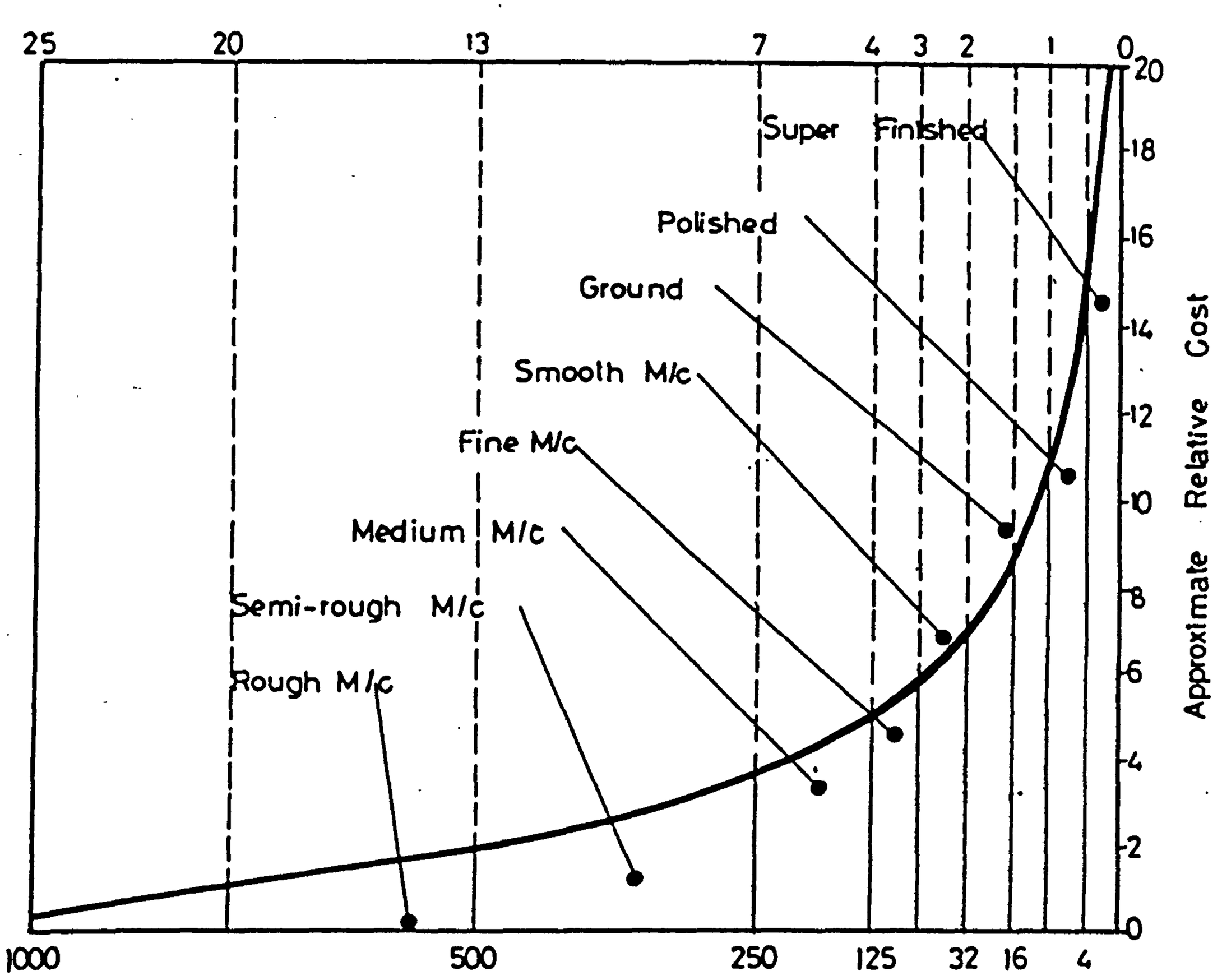

FIG.(3·65) TYPICAL COST INFORMATION - REF (22).

APPROXIMATE RANGES OF SURFACE FINISH PRODUCED BY VARIOUS MACHINING PROCESSES

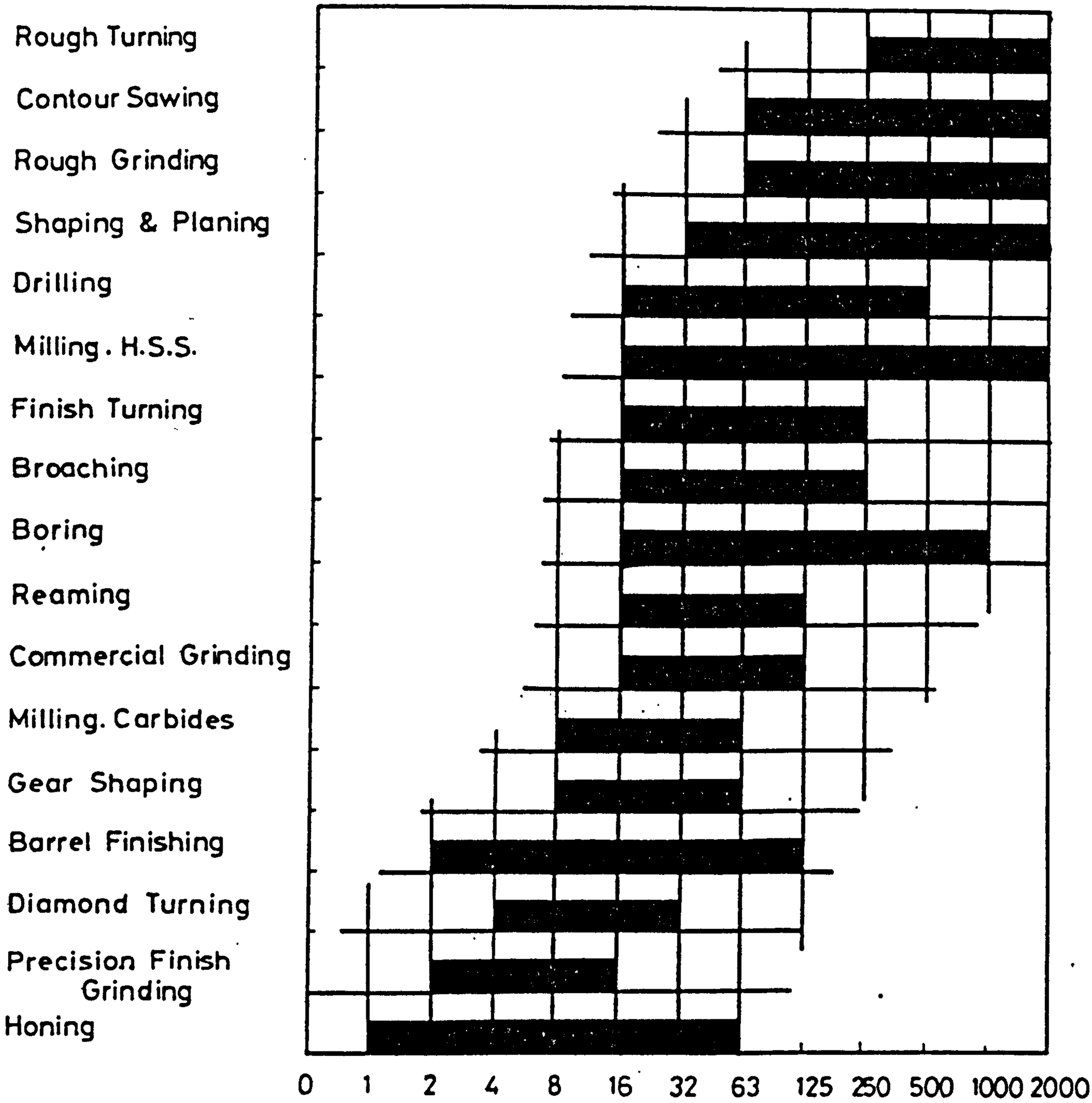

FIG.(3·66) TYPICAL COST INFORMATION .

DRILLING COSTS FOR VARYING DEPTHS OF HOLE

——— Actual Cost .

— — — Projected Cost (Theoretical) .

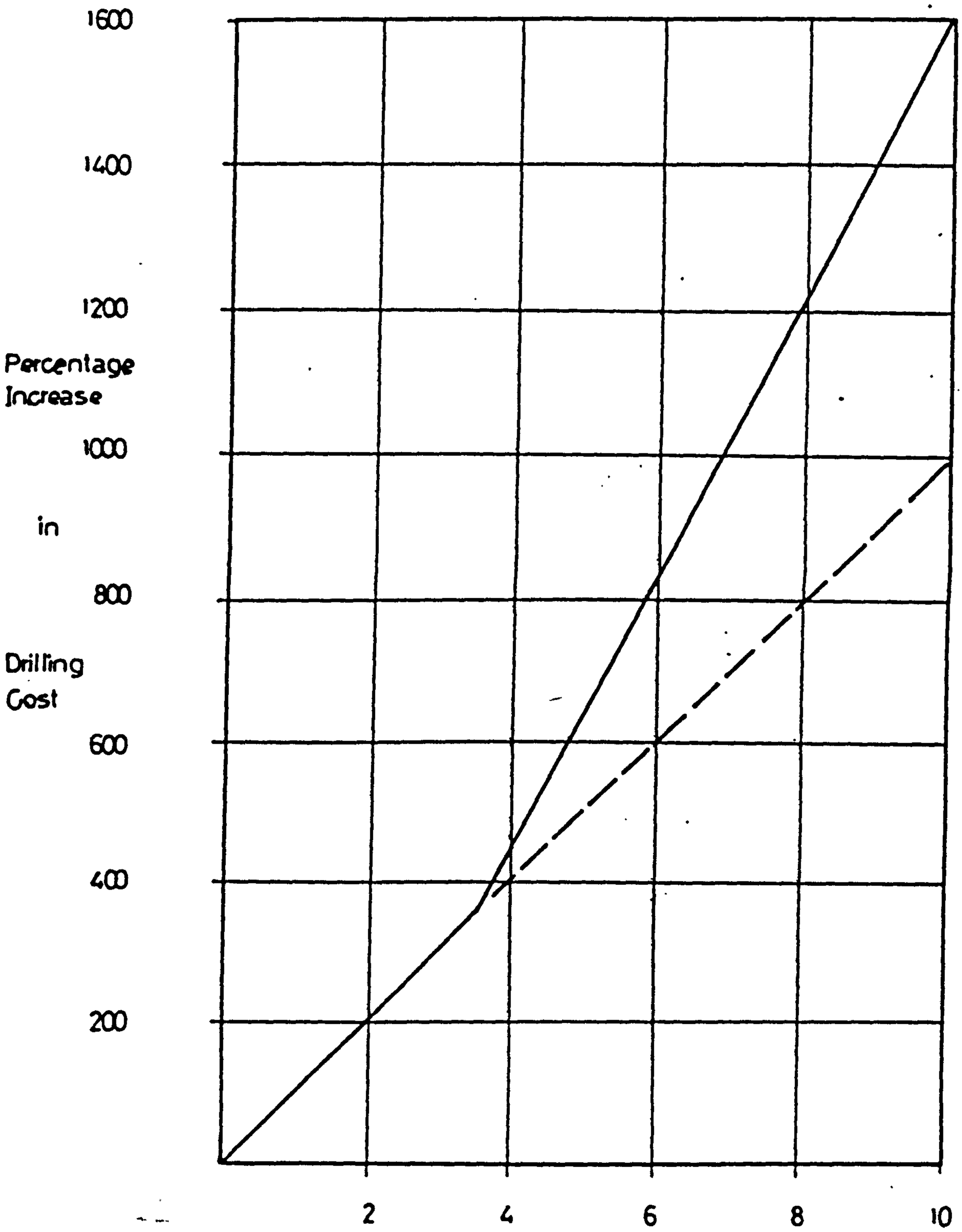

FIG.(3.67) TYPICAL COST INFORMATION - REF(22) .

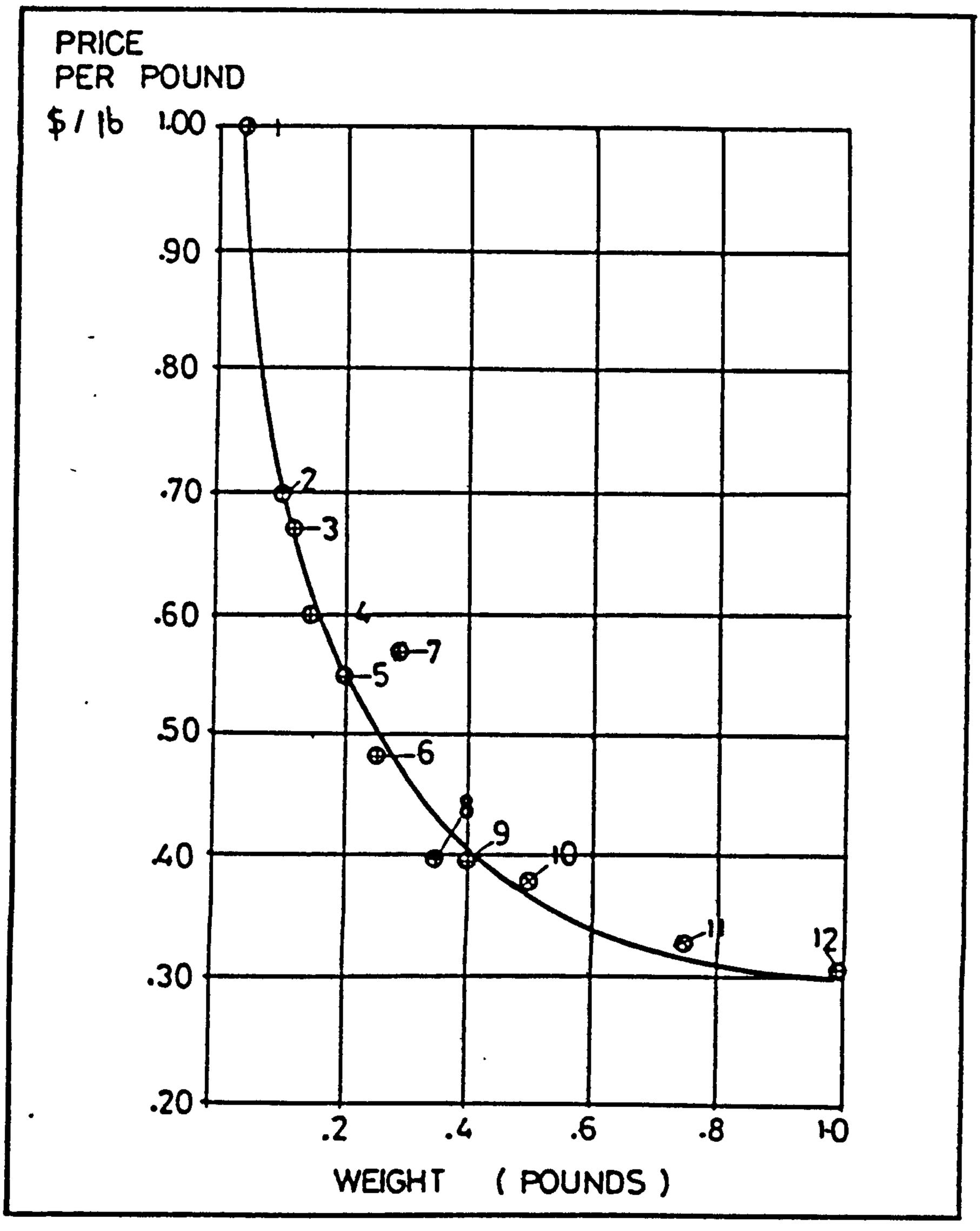

FIG.(3·68) TYPICAL COST INFORMATION - REF (36) .

TABLE (3.69) -MATERIAL COSTS INFORMATION (TYPICAL ONLY)-FROM REF.(20)

Steel: Miscellaneous Forms
(Relative costs: Hot-rolled 0.2 carbon = $1.00)

Name	Relative price			
	Bar	Sheet	Strip	Plate
Hot rolled, 0.2 carbon	$1.00	$0.99	$0.99	
Hot rolled, special quality	1.07			
Cold drawn	1.36			
Cold drawn, sulfurized carbon	1.55			
Cold drawn, screw stock	1.60			
Cold drawn, 0.4 to 0.8 carbon	1.36			
Cold rolled, 0.2 carbon	....	1.11		
Galvanized sheet steel	....	1.20		
Enameling sheet steel	....	1.19		
Aluminum coated	....	1.51		
Aluminum killed strip, cold rolled	....	....	1.42	
Cold rolled, carbon steel strip	....	....	1.31	
Plate, copper bearing	....	....	....	$1.00
Plate, boiler quality	....	....	....	1.05
Plate, 0.35 to 0.45 carbon, under 1½ in. thick, silicon killed	....	....	....	1.00
Plate, structural quality, under ¾ in.	....	....	....	.97
Plate, chrome-silicon flange quality under 1½ in. thick	....	....	....	1.66
Plate, carbon-silicon, flange quality under 1½ in. thick	....	....	....	1.17

Operation Speeds

Operation	Operations per minute	Average shop cost per 1,000
Take micrometer reading	5–8	$16.00
Use GO and NOGO snap gauge	10–15	8.00
Stamp part with hammer	15–20	6.00
Stamp part with rubber stamp	20–30	4.00
Drill small hole, drill press	4–8	20.00
Pierce small hole, punch	20–30	4.00
Wrap part in tissue and seal in carton	2–5	35.00
Position part in "egg-crate" carton	10–15	8.00
Pick up and position part in fixture	15–30	5.00
Pick up and drop part in fixture	30–50	3.00
Pick up, start, and hand-drive small screw	3–6	30.00
Pick up, start, and air-drive small screw	10–12	9.00
Power-drive small screw, hopper feed	10–20	5.00
Rivet with high-speed hammer 2 parts	4–8	20.00
Resistance-weld 2 parts	5–10	13.00
Tubular-rivet 2 parts	8–15	7.00
Cut off small tubing, screw machine	5–10	13.00
Cut off small tubing, abrasive wheel	30–60	2.00
Count parts visibly	60–120	1.00
Sort handful of parts 2 stacks	60–100	1.50
Deburr small screw-machine parts	7–12	13.00
Polish head of chrome-plated screw	5–12	20.00
Draw arc and hand-weld 1-in. pass	3–6	25.00
Ream hole, drill press	2–10	25.00

Machine Speeds*

Machine	Operations per minute	Average per 1,000
Punch press, high-speed auto., 4 tons	250–400	$ 0.35
Cold header, ⅛-in. stock	100–500	0.50
Punch press, high-speed auto., 15 tons	150–550	0.50
Punch press, high-speed auto., 25 tons	125–200	0.65
Cold header, ¼-in. stock	90–450	0.80
4-slide machine, light	75–175	0.80
Punch press, 60 tons	75–150	0.85
Cold header, heavy 1-in. stock	80–400	1.00
4-slide machine, heavy	50–125	1.00
Punch press, hand feed (blanking), 75 tons	50–125	1.00
Punch press, hand feed (blanking), 300 tons	40–80	1.60
Thread roller	40–80	1.60
Screw-head slotter	30–60	2.00
Automatic wire cutter and stripper	30–60	2.00
Dial tapper	30–50	2.50
Punch press, forming, slide feed	30–40	3.00
Punch press, forming, hand feed	15–30	4.00
Tapping machine, foot-operated	15–25	5.00
Tubular riveting machine	8–15	7.00
Resistance welding machine	5–10	13.00
Centerless grinding machine	2–8	16.00
Molding machine, thermoplastic	1–4	30.00
Brazing machine	1–2	50.00
Molding machine, thermosetting	½–1	125.00

* These are average figures and are based upon one operator and one machine.

TABLE (3.70):PROCESSES COST INFORMATION(TYPICAL ONLY)-FROM REF(20)

CHAPTER (4)

INDUSTRIAL SURVEY

4.1 INTRODUCTION

As a result of the initial findings from literature survey , it was decided that a similar survey in industry should be carried out along the same lines. The objective of this survey was to review current practices and techniques used in industry in relation to design for economic manufacture with a view to assessing their suitability to satisfy the growing need, to cut manufacturing costs.However, at this stage prior to the survey , a clear and precise definition of the proposed "Design for Economic Manufacture" concept has not been established, and therefore , part of the objectives behind the survey was to define the concept in terms of ultimate objectives and the means by which these objectives can be fulfilled. It was thought that this could best be achieved by constantly challenging the proposals of Chilsholm & Fogg , as outlined in their tentative report, against current and future needs of the industry.

For the special purpose of the industrial survey, a relevant questionnaire was prepared for the investigation.

Ten different organisations, which representing a wide spectrum of industry, were surveyed. These are as follows :-

- Plessey Telecommunication Co.,Liverpool
- Vickers Limited, Croyford Works
- Hoover Limited , Merthyr Tydfill
- Joseph Lucas (Electrical) Limited, Birmingham
- PYE Telecommunications, Cambridge.
- PYE Unicam , Cambridge
- Ford Motors,Esssex
- Rolls Royce (1971) Company Limited , Aero-engine Division , Derby
- British Aircraft Corporation , Weybridge Division, Webridge
- British Aircraft Corporation , Military Aircraft Division , Preston & Warton

In almost every organisation , the investigation focused on two major points as follows:-

(a) Whether the organisation management has realised the

significance of improving the design / manufacture interface as a means to economise in product manufacturing . If this was the case , what means have been adopted to achieve such interface?

(b) To identify the role of the Value Engineering activity in relation to product design and product manufacturing , with a view to assessing its suitability as a means to satisfy the growing need.

The relevant information , as a result of the investigation is given in section (4.2) of this chapter. The analysis of the results are discussed in section (4.3).

4.2 RESULTS OF THE INVESTIGATION

4.2.1 RESULTS OF AN INVESTIGATION CONDUCTED AT "PLESSEY TELECOMMUNICATIONS COMPANY " - LIVERPOOL

People approached for the investigation :Manager of Design Office

(I) G E N E R A L

Number of emplyees :-

Edge Lane Works : 8,000

Southsheild Works : 2,000

Commissioning and Installation

Engineers : 5,000

(II) THE PRODUCT

Telephone Exchange systems

(systems of switches for 200 to 10,000 lines)

No standard products as such are used. Systems are constructed from standard parts.

Systems used :-

Traditional (Strowger) - old system

Cross Bar (Matrix) - widely used

Electronics - newly introduced system

The customer, either public or private, will specify type of system which best suits his application . British Post Office is the biggest customer for this type of product.

(III) THE DESIGN FUNCTION

Three design offices are employed ; Mechanical , Circuit and Contracting

Mechanical Design and Layout

55 engineers (25 mechnical , 30 layout) employed in this office are responsible for the mechanical design of the basic switch part. Once a standard mechnical design is established, it is then used in 99% of the employed systems.Most of the effort and time is devoted to maintaining the drawings, improvements, metrication , etc., and it is rare when the existing standard mechincal desing o: the switch part is changed, or a new design is made, to suit a specific customer requirement.

However , if it is necessary to meet new market requirement it is possible to develope a new mechanical design .

Circuit Design

20 to 30 designers employed.They are responsible for the main electric circuit for the proposed system . This again takes place only when necessary.

Contracting Engineering

100 engineers are employed for the sole purpose of preparing the overall system design to suit every particular customer requirement.

(IV) THE DESIGN PROCESS

The design of the Telephone Exchange Systems follows certain systematical procedures as shown in Figure 4.1 and figure 4.2).

Contract Engineering

100% of the orders have to pass through contract engineers for the preparation of overall system design .However, 90% of these systems will be constructed using standard electric circuit designs and standard mechanical parts designs (i.e. standard switches) . Within this process the contract engineers consider the employment of the most economic overall system to suit the needs , using the available standard designs.

Circuit design

Although 10% of orders require new circuit designs to meet specific customer requirements, 90% of these designs will be constructed using standard mechanical designs of switches. At this stage, electrical engineers are free to introduce a new circuit without any consideration of the production methods. They claim , however, that they consider the overall cost of the cirucuit employed within their design.

Mechanical Design Stage

Only 1% of orders require the use of a new mechanical design of the switch part.

Development and Test

Circuit and system designs are followed by the fabrication of one off, and testing.

(V) PRODUCTION FUNCTION

Main operations are assembly and wiring.

In-house manufacturing processes are :-

Pressing , Die Casting , Machining , Fabricatiun , Welding , Rivetting and Coil Winding

Bought out parts :-

Wires , Standard Electrical Components and plastic mouldings

Typical cost breadkown of manufactured parts :

Material - 30% -40%

Labour - 15% -20%

Overheads- 40% -55%

(VI) VALUE ENGINEERING ACTIVITY

No value engineering department exists as such . The technique has been introduced to the company through American consultants, who are experts in the field, by giving seminars to all "Plessey" engineers and management .Value engineering has since been considered as everyday practice .

Within the practice of value engineering , product cost effectiveness is claimed to be implemented in the following areas:-

- Whenever the design of electric circuit has taken place, electrical engineers claim to use the value engineering functional approach to reduce the cost of the total system .
- Efforts are continuously to reduce the system installation costs through the application of value engineering fucntional approach to reduce installation activity in terms of time and number of personnel involved.
- Whenever new switch parts have been designed, Value Engineering practice is implemented to optimise the switch part design , mainly to reduce the part direct manufacturing cost (i.e. materials , tooling , labour, etc .) Within this process other product requirements are considered., the most important of which are the life and the size of the part .

The length of service and the reliability of the part, is essential as the whole system will have to be Guaranteed to the customer for 30 years, which is equivalent to 100 x 10 operations. On the other hand, the size of the switch part is becoming an important requirement, since this would have an overall effect on the size of the overall exchange system and consequently the size of the building site where the system hardware is to be installed.In highly rated areas this will have a serious impact on the system running cost and the operating life-time , which may off set the initial buying cost.Fig. 4.3 shows a schematic representation for the implementation and application of the Value Engineering functional approach , in Plessey Telecom.

4.2.2 RESULTS OF AN INVESTIGATION CONDUCTED AT VICKERS LIMITED -CRAYFOR WORKS

People approached for the investigation : The value Engineer

(I) THE PRODUCT

Equipment manufactured at Crayford includes :-

-Vickers hardness testing machines

-Packing machines (under licence)

-Box -making machines

-Wire stitchers and large commercial staples

-Bottle filling units

(II) PRODUCTION FUNCTION

Type of production : Batch and jobbing

In-house faciltiy : Machine shop and sheet metal fabrication . Workds foundry was closed recently.

Machine functional layout is used. Group technology has been considered but could not be implemented due to disagreement with the union.

Sub-contractors : Castings, forgings , investment castings and fabrications.

(III) VALUE ENGINEERING ACTIVITY

The Value Engineering Department has been in existence since 1965. At the present time only one person is running this department and he is known as the Value Engineer.

A great proportion of the value engineering work and practice is applied to existing products at the production stage. Only in some cases are new product designs investigated for potential improvements at the design stage. The application of Value Engineering at the Production Stage and Design Stage is discussed under (A) and (B) respectively .

(A) Value Engineering at the Production Stage

This is carried out on certain selected parts or sub-assemblies, throughout the execution of systematic procedure, described below:-

Selection of Parts for Analysis

The factory improvement committee recommends parts or sub-assemblies for analysis. This , in turn , is achieved by making use of the computer print out, originally issued for costing purposes and up-dated at frequent intervals, on which the components are listed by part number., drawing number, stock

holdings, cost per part and sales records.
Three types of items are selected for analysis :-
(1)Items which have suffered a substantial drop in sales.
(2)Items on which the production costs have risen sharply.
(3)Items on which possible savings can be achieved through the application of value analysis.
In certain cases, however, some components which fulfil the above criteria can still be excluded form the examination. For instance, those of large stocks, such as castings that have to be purchased in economic batches, the need to use the existing stock may delay or even preclude the introduction of an alternative.

The Formation of the Value Analysis Team

The selection of component parts for investigation is followed by the formation of the Value Analysis Team. A typical team consists of the following:-
(a)The Value Engineer
(b)A Designer
(c)A Process Planner
It is worth noting at this stage that the present Value Engineer was previously a production Engineer and has a good background on manufacturing processes both in-house and universal .
He is also experienced enough to be able to estimate, with some accuracy , the manufacturing costs for individual components.

The Application of the Analysis Technicques

This is carried out by following the conventional value analysis job phases, i.e. information , function , creative, analytical , planning , execution and finally conclusion.
The information phase would have been completed earlier on by preparing as much information as possible related to the parts or sub-assemblies under consideration . This includes the part specifications, drawings, parts lists and sub-assemblies, cost breakdown and also , if possible, an actual part hardware from the stores .At the function phase, primary and secondary functions are established for the sub-assembly and for the individual parts as necessary.The value of each functions also questioned. This is followed by the creation phase where alternative methods for

accomplishing this function is generated by the team.
The resulting proposals are then carried forward to the analytical stage and are examined with the aim of selecting those suggestions that appear most likely to provide efficient and economic solutions from 'Vickers' point of view.
At this stage, certain company policies could govern the selection of the final proposal and influence major decisions. These policies are related to technical, as well as economical , aspects.
Technically, the product requirements are considered to be a paramount factor. Economically, the factory shop work load comes first.
A particularly rewarding execercise was the analysis of Vickers hardness tester. This well-known machine has been in production for over 40 years during which it had remained substantially unchanged because the design was old.
there was scope for improvement , but in view of the common acceptance of the machine as a test standard (even for other testing machines) it was found necessary to ensure that any changes carried out would not affect the basic operating concepts of the unit . For this reason , improvements resulted only in employing a new materials and processes whilst using the same component designs.
On the other hand, it is the policy of the company , all other factors being equal , to prefer those modifications that retain the maximum amount of work within the organisation.
The outcome of this policy, following the closure of the foundry , has been the replacement of castings by machined components from stock or fabricated by welding.
This was followed by preparing final proposals for submission to the management for approval.

(B) Value Engineering at the Design Stage

When the design of a new machine is taking place, special consideration was given to parts which are produced in large quantities in order to achieve maximum possible savings. The responsibilitly of the Value Engineer, at this stage , was to advise the designer on problems which have not been exercised in the past .
In addition , the value engineering practice was taught to designers as a philisophy and discipline to be used in their day-today design activity.

4.2.3 RESULTS OF AN INVESTIGATION CONDUCTED AT HOOVER LIMITED-MERTHYRTYDFIL

People approached for the investigation : The Value Engineer

(I) G E N E R A L

Hoover have the following site locations inland:-

(a) Perivale-London (Head Office)

Employs 3500 workers and includes :

- Research and Development Office
- Design Office (Stylers)
- Production unit (for flow gate appliances and vacuum cleaners)

(b) Cambuslang-Scotland

Employs 5500 workers and includes mainly production plant to produce
electric motors, program timers for washing machines, vacuum cleaners
electric kettles and electric fan heaters.

(c) MerthyrTydfill- South Wales

Employs 5500 workers and includes :

- Design Office (Production Designers)
- Value Engineering Department
- Production Plant (for washing machines, tumble dryers and spin dryers)

In MerthyrTydfil, dishwashers used to be produced but their production has recently been stopped , because of its poor return on capital . In fact, production cost was too high for the market, as the Italian products almost cover the whole market.Therefore the reproduction of the dishwashers was under consideration.

(II) PRODUCT RANGE

The whole product range was generally market orientated (company style) product. There were two different types of machines produced and marketed:-

(a) Standard range of machines - company styling - to suit market requirements

(b) Particularly styled machines to suit individual customers such as "ELECTFICITY BOARD" , "CURRYS " and " HOUSE OF FRAISER "

These machines are called ' unique machines ' although , they only look different from the outside, in order to suit individual

customer specifications. The inside mechanisms, are the same (Hoover mechanism).It is wellknown that "Hoover" is the largest supplier in the U.K. of domestic appliances.

(III) THE ORGANISATION FUNCTIONS

These functions which were particularly under study were ; the Design function , the Production function and the Value Engineering function - These are discussed in (a) , (b) and (c) as proceeding.

(a) The Design Function

The design function at Hoover, splits into two main functions ; the Research and Development Designers and the Production Designers.

Research and Development Designers

This team was located at Perviale London and was responsible for the development of any new machines required by the market. They were involved in producing the main outlines of the machine , to meet new customer /market requirements.

Drawings produced by Research and Development designers are only sketches, which will represent the functional design / style of the machine with no awareness of production facilities or the cost of manufacturing.

Production Designers

This team of designers was located at MerthyrTydfil and was responsible for 'Productionising ' the functional designs which were produced and developed by Research and Development designers. Drawings were produced by Production Designers were detailed with tolerances. Liaison meetings between Research and Development designers and Production designers are held continuously , during the detail drawing stage of a new machines.

In order to help Production Designers to finalise their designs, they were supported by a group of resident specialists such as Metallurgists, Production Engineers and Plastic Technologists, each to provide specialised knowledge in their certain areas.

Metallurgists will provide the designers with materials trends, up-dated types of available materials, their strength and lives for both conventional as well as pre-quoted materials. Production

Engineers will advise of any design changes for the ease of production . They will also advise of any universal manufacturing processes available in-house or outlside.
Plastic Technologists, who are Hoover's own plastic consultants, will advise in the application of plastics, the capabilities of the plastic moulding process and any design changes necessary for the plastic processing , they also may give advice on the cost of material . Rubber Technologists and Metal Finishing Technologists can also be called upon to give advice at the Design Board.

(b) Production function

The type of production employed is mass production .

Available Process In-House

The following processes were available in-house : plastic moulding (Injection and Compression), Plastic extrusion, pressing , Machine shop , Aluminium die castings, Rubber moulding, Resistance welding and Electrostatic paint finsihing.

Material Used

Several types of materials were used, the most common ones were ;- Plastics (polyproplene, P.V.C.,A.B.S.) , Aluminium sheets, Aluminium strips, steel coils, steel sheets, steel strips and stainless steel.

(c) The Value Engineering Function

The Value Engineering function at Hoover was established in 1964 mainly for cost reduction purposes. Although Value engineering activity has its application during the development for new products, the highest proportion of cost saving is achieved through the application of value analysis on products at the production stage,these will be discussed later.

(IV) PROCEDURE OF MARKETING, DESIGN AND PRODUCTION OF WASHING MACHINES

The introduction of a new range of washing machines to the market follows systematic procedures which would ensure the suitability of the range to the market from all aspects. The procedure includes market survey, definition of machine specifications, first design stage, performance assesment , design improvement, final design and final assesment stages. This is shown schematically in figure (4.4) and is discussed in some detail under (A) to (E) as follows :-

(A) Marketing Survey

Prior to the development of any new machine, a complete market survey is carried out as follows :-

a) Establishing the Customer Requirements

This is achieved by holding product promotion meetings with the end users such as housewives, laundry owners , etc.to discuss all possible improvements and the shortcomings.

During these meetings actual products are displayed.

b) Establishing Requirements of Washing Powder Manufacturers

Hoover is forced to manufacture machines which would suit any new washing powders. For this the washing powder manufactureres have to be consulted to advise on the effect of the introduction of the new machine range on the use of their powders.

c) Establishing Textile Industry Requirements

The textile industry is also consulted, since every new developed fabrics need different treatment during washing. For instance, it may need different washing cycles and this effects the number of programs for washing.

According to this survey the Marketing people establish the broad requirement for the new machine as follows :-

- Height of the machine (to conform with B.S. specifications)
- Mobility of a machine (customer requirement)
- Number of programs (textile requirement)
- Market trend in colour (change every two years)
- Degree of dryness (customer requirement)

Similar requirements are compiled for other products such as the vacuum clearners, dryers,etc. These requirements are passed on to the Research and Development engineers in order to use it as a basis to establish the verall specifications for the new machine.

(B) Determination of Machine Specification

This is achieved by the Research and Development team which consists of

- Industrial Designers (Stylers)
- Design Engineers (Development Designers)
- Laboratory Engineers :-

a) Mechnical Engineers ; for mechanism development and performance assessment.

b) Electrical Engineers ; for timer development

c) Reliability Engineeris ; for sub-assembly testing on rigs.

d) Material Engineers ; To advise on materials and paint finishes

Subsequent to market survey, a research and development meeting was held to discuss market requirements.

According to this meeting, engineering specification were layed down to meet these requirements. Two types of specification were established:-

- Industrial design specifications (Style)
- Product design specifications (Mechanisms)

(C) Preparation of Preliminary Drawing (First Design Stage)

The above specifications were handed to the Development Designers in order to provide some sketches for the new required machine . Five designers, each working on a different part of the machine, produce a set of prelimianry designs. They may produce more than one design for each part. Their leader was a senior Designe Engineer.

As a result of these sketches, the following was established :-

- Number of components were specified
- Nominal dimensions were allocated
- Materials were selected

There was no production awareness at this stage,or cost measure . Designers at this stage were relying on their general shopfloor background and Value Engineering experience. They did not consider production requirement of the design since they have no idea about the existing production facilities.

(D) Performance Assessment of the Machine

According to the above sketches a prototype of the machine in question was fabricated for testing. No processing for the materials was taking place at this stage. The performance of the machine was assessed very broadly. Several schemes may be developed for testing at the same time. According to this assessment a machine would be selected as the machine that had the best performance. This selection will be based on performance and appearance, and may involve the combination of individual

sub-assemblies of the different tested schemes. The cost of production was not taken into consideratin in assessment at this stage.

(E) Design Improvement stage

Subsequent to best machine selection ,as results of its performance and appearance assesment, P.I. drawings (Preliminary Issued) were produced by Developement Designers for the selected machine . These drawings were similar to the first sketches, unless a combination of different sub-assemblies were considered. They contain the nomial dimensions of the machine but no tolerances.

These drawings were circulated to other functions concerned including production Engineers, cost estimators, plastic technologist, value engineers, purchasing officers and product control laboratory , who give careful assessment to the proposed design from their point of view. Production Engineers will check the suitability of the design for production and whether the design should be changed to be capable of being poduced using conventional methods of manufacture.

The cost Estimators would estimate the cost of producing the individual parts of the machine . Value Engineers, at this stage, may suggest one or more design changes to reduce manfacturing cost. This suggestion may include reducing number of parts, or changing design to use another material or another process. The Value Engineering duty could therefore overlap with the Production Engineer, at this stage.

The purchasing officers may produce the B.O. (Bught - Out) cost of parts supplied from outside suppliers or sub-contractors. The product control laboratory engineers are concerned only with the functional performance of the machine .

Soon after these P.I. drawings were circulated, a meeting was held between designers and the above people to consider all the possible improvements for the existing design.

During this meeting, or the series of liaison meetings, between designers and other functions concerned the following factors were considered:-

- Performance of the machine
- Appearance

- The ability of the design to be manufactured by the conventional manufacturing methods.
- Cost of producing the design

To judge upon the above factors the following would be available to the participants :-

- Basic design
- Estimated cost
- Actual prototype
- Performance assessment report

From these meetings, a large number of changes to the basic design may occur. According to these changes, designers were asked to produce new designs. The changes could lead to the ease of production, the reduction of manufacturing cost and /or the improvement of the machine performance.

The new designs would still be without tolerances. A new prototype would be made to the new drawings and it should be subjected again to a performance test. If it was satisfactory , a tolerance drawing would be prepared.

(F) Final Design and Assessment Stage

In parallel to the preparation of the tolerance design (productionised design), thirty or forty other prototypes would be made for final performance testing. The prototype are to a great extent made by the proposed manufacturing process.

The tolerances design were prepared by producion designers at Merthyr. Complete liaison meetings between draughtsmen and production engineers were held. Value engineers help at this stage in specifying the right tolerances, by using machinery handbook and past experience.

The machines under test were run 24 hours a day for reliability testing and safety approval .

When any change on the machine was required it was implemented on the drawings. Weibul probability system was used to predict the number of the failed machines after prodcution.

(V) THE APPLICATION OF VALUE ANALYSIS DURING PRODUCTION STAGE

The lead time of design and development of any machine , from the commencement ofa market survey to delivering drawings to

production, could take up to two years. Since the product should be market orientated it would be subjected to high competition. Terefore, when a new prodcut is introduced to the market, the development work is speeded up to get the product into the market at the right time to stand the chance of competing with the other similar products. In other words, empahsis at this stage was concentrated on getting speedy design and production rather than economic design and production . When the product has reached the market at the right time and was in production ,thoughts were directed then towards reducing the product manufacturing costs. For this reason most of the Value Engineering Work was carried out at the production stage.

Procedure of Value Analysis

This follows a systematic procedure as discussed in (a) to (e) as proceeding :-

(a) Establishing Standard Cost

When the machine is in production and has an established place in the market, the costing department is asked to produce a standard cost for the machine i.e. actual current manufacturing cost. The cost is based on :-

Material)
Labour) excluding
Variable O.H.) administrative O.H.
Fixed O.H)

(b) Allocating Global Target Cost

Following the establishment of the current standard cost, the management allocate new target costs for the machine which is based purely on the company policy for an acceptable profit margin .

(c) Selecting Items for Value Analysis

The Value Engineers scan through all the cost sheets which are prepared by the costing department for the new machine , in order to select high cost items to be candidate for value analysis exercise.

(d) Setting up Value Analysis Committee

The Committee of Value Analysis application will consist of the following :-

Chairman : Chief Design Engineer

Secretary: Permanent Value Engineer

Other participants represented :-

Costing Department

Purchasing

Production Engineering

Engineering Design Group

Engineering Development Group

Any other specialists such as :-

Plastic Technologist

Rubber Technologist

Outside Suppliers

(e) The Execution of the Value Analysis Job Plans

Following the selection of items for analysis and the formulation of the value Analysis Team , the value analysis conventional job polans are executed on their normal sequence as follows :-

- Information phase.
- Speculation Phase.
- Evaluation phase.
- Implementation phase.

Information phase

The following articles are to be made avialable at the information phase:-

- Drawings .
- Parts of the machine.
- Plans and layout sheets.
- Actual cost of the parts.
- material , labour, fixed O.H. Variable O.H. and B.O. cost.

Speculation phase

At this phase, new idea are generated which could lead to any of the following changes :-

- Changing materials and /or changing process
- Reducing number of parts
- Reducing material thickness and introducing ribs reinforcement

Evaluation phase

Out of so many generated ideas, three or four ideas are chosen for further consideration . Sketches are drawn, Designers are asked to produce drawings and cost estimators are asked to provide an estimate for the cost of the new design for the next meeting . In this meeting, usually a new design is selected for implementation

Implementation of Design Changes

The implementation of new design changes which result from the value analysis meeting depends on the following :-

-Stock holding for the item or tems under consideration.

-Ensuring that there are enough numbers of spare parts to cover existing machines.

-ability to involve tool changes .

-Cange of working conditions and trade unions.

Before any change is completely implemented, a prototype is made for perforance testing.

Allowable recovery time for capital investment is 18 months for tools and 2 years for machines or plant.

4.2.4. RESULTS OF AN INVESTIGATION CONDUCTED AT"JOSEPH LUCAS ELECTRICAL LTD."BIRMINGHAM

People approached for the investigation : Quality and Reliability Manager

(I) G E N E R A L

Company Products:

Lamps,

Coils,

Distributers,

Screen Wipers,

Switches ,

Starters,

Alternators and Dynamos,

Solenoids,

Flashers,

There is a wide range of each type of product.

Number of employees : 20,000 at Great King Street Works

Turnover : £ 300 M

(II) PRODUCT SPECIFICATIONS AND REQUIREMENTS

The general requirement of the Lucas products are :-

Right Quality ,

Reliability,

Right Economic Cost,

The specific requirements of the products are the size and also the weight. These are the major constraints in design besides the cost.

(III) PRODUCT DESIGN AND DEVELOPMENT

For any range of product in Lucas, the design of a new product follows a systematic procedure. In this particular survey the design of a new lamp was considered closely . Refer to fig (4.5)

Stage 1-The Concept Design Stage

After consultation between the Marketing Department at Lucas and the customer (the car manufacturer) , the general arrangement of the new lamp was established.On the basis of the car manufacturer requirements, the design team submit several schemes for approval by the customer who selects a final scheme and approves it for further consideration .

This final scheme is then submitted for study by the New product

Team. The New Product Team meets once every 14 days and consists of:-

- Chief Designer (Chairman),
- Head of New Products ,
- Senior Process Engineer(of Die Casting Division and Plastic Division),
- New lamp Engineer responsible for Process Planning and Tool Design.
- Project Engineer of lamp under consideration

In their meeting the New Product Team study the proposed scheme (design) from several aspects, i.e. production , cost, reliability and serviceability in order to approve the general arrrangement of the lamp under consideration . The details of the three major components of the lamp were fully examined, i.e. lens-base-reflector. Within this meeting , the possibility of manfacturing the individual components using existing processes of die casting, pressing and plastics are considered. Te Senior process Engineer gives details of new aavailable techiniques and processes, which can be applicable to th new design. Manufacturing cost estimates for the various parts of the lamp could then be forwarded to the "Team" on request from the Estimating section in the Adminstration Department . The manufacturing and production side is represented by the New lamp Engineer who was responsible for process planning and tool design. He would highlight any problems which may result from the part or tool design geometry and consequently advises of any design changes which would be necessary to ease the manufactuing of the part under consideration.

Te project Engineer for the lamp under consideration would advise the "Team" of the reliability of a previous lamp from the same lamp group and consequently influence , within the functional design under consideration , the necessary arrangements which would ensure the reliability of the new design.

At the end of this stage, the general arrangement of the lamp would be established and a decision would be taken as to which process to be used, for each individual part. The Chief Designer has the final responsibility for the design.

Stage 2 -Prototype Testing

Subsequent to the concept design stage and before the design

detialing, a pre-production proving stage takes place.During this stage, a prototype is made and tested for endurance and environment.

Stage 3 - The Detail Design Stage

The general arrangement of the three major parts of the lamp are passed on to the Drawing Office for detailing. Within the course of this work the basic criterion was to ensure that the production requirements of the process under consideration were met. For this , a production Engineer from the concerned manufacturing section would be continuously working closely with the draughtsman to advise him of necessary design features, which were required to meet the processing and tooling requirements of the particular process concerned. Also , within the course of this work, a Sandard Engineer was consulted to ensure that the design incorporates standard parts where possible, although the lamp division only uses screws and bulb fasteners as standard.
When the detail design was completed, it was submitted for approval to a second committee known as the 'Design Approval Team' . This team was similar in construction and function to the 'New Product Team' and it consists of the following :-

- New Lamp Engineer - Chairman (responsible for tooling , processing ,etc.)
- D.O.Section Leader - to represent the design side.
- New Product Engineer.
- Service Engineer.
- Manufacturing technologist - die casting, plastics , etc.

The details of the three major components of the lamp are fully examined ,(lens-base-relector).The lamp design is put back for detail changes if not assured.

Re-estimate of Cost

The moment the detail drawings were given design approval by the Design Approval Team, they were released for formal estimating . The estimators, who are part of the administration service section, will work on historical data and past experience. Part of the cost information was compiled locally and the rest was from literatrue. The estimators, although they were not trained engineers, would sometimes point out certain peculiarities in costs which highlight possible imrovements.

Stage 4-Getting it into Production

After the lamp has been tooled, Lucas produces first off tool samples and after examination of these samples, any modifications to rectify distortions , springback, etc., were made. The new products section was then responsible for the manufacturing 'try out ' run which will produce 250 lamps.

Dring the run it will be observed by :-

- Superintendent of factory .
- Method Engineer.
- Works Study Engineer.
- Production Engineer responsible.

and each must individually signify his approval of the features, methods, etc, before the process is accepted for production .

Product Cost Reduction

As the product goes into production , a cost reduction committee known as the ' Factory productivity Committee ' was made responsible for monitoring the progress of the product at production stage, aiming towards bringing production costs down to target. This committee consists of :-

- Factory Manager .
- Chief of Administration Department.
- Production Engineer.
- Works Study Engineer.

The Administration Department will draw the attention of the committee to any loss maker. Beside this cost reduction activity, the lamp division also had an operational improvement programme (O.I.P) which was run by a team who has the responsibility of investigating and improving operational performance . The team meets regularly to agree specific saving targets on individual components with the General Manager.

(IV)VALUE ENGINEERING ACTIVITY

There is no Value Engineering Department as such , but the techniques have been used for over 20 years. It was first introduced to the company after consultation and discussion with General Electric of the U.S.A.

Many activities of value engineering were functional activities, through weekly meetings, with everybody who was involved in value

engineering. The techniques are formally applied by the :-

- New Products Team at the concept design stage .
- Design Approval Team at the detail drawing stage .

In applying value engineering techniques, the job plan phases were followed as much as possible. Value engineering was also an integrated part of the operational improvemet programme O.I.P. as discussed above.

Value analysis application , at the product production stage was considered to be limited at Lucas for several reasons.

For instance, it was difficult to apply value analysis on ephemeral products such as head lamps or side lamps, since outside components represent part of the car style and cannot be changed.

On the other hand, change of internal part of the car was not welcome by te car manufacturer.

4.2.5 RESULTS OF AN INVESTIGATION CONDUCTED AT PYE TELECOMMUNICATION CAMBRIDGE People approached for the investigation : The Value Engineer

(I) COMPANY PRODUCTS

There was a wide range of radio communication systems, which have a relatively long life span .

This type of product was manufactured in PYE and marketed abroad in many countries under licence. This , in turn , is obtained from the individual country's licencing authority such as M.P.T. in England and P.T.T. in France.

In order to obtain this marketing licence, product functions and parts have to be stated clearly by PYE in the licence application to be approved by the particular authority . Yet , when the design has to be considerably changed,subsequent to obtaining the first licence, another licence had to be obtained and this was proved a rather difficult process as well as time consuming.

Therefore , any changes made to the product design was kept within certain limits which would not affect the major functional area of the product.

(II) VALUE ENGINEERING ACTIVITIY

Because of the long life span of the product, most of the value engineering application was conducted at the product production stage. At the same time, due to the fact that design changes, subsequent to production and marketing, had to be limited as discussed above, the application of value analysis was also kept to a certain limited level for the same reason. To be more specific, the value analysis approach was only applied to component design level with a view to leaving basic design features unchanged. This had led to the fact that the percentage of cost saving achieved as result , was usually within the limit of 2-3%

Procedure of Value Analysis Application

The application of value engineering to products at the production stage, follows a systematic procedure during which the value enineering / value analysis functional approach job plan phases was adhered to .

The following sequence of events was followed :-

(a) Product Selection for Value Analysis

Certain criteria have to be fulfilled by the product or item before

it could be subjected to value analysis application. These were summarised as follows :-

- Sales turnover.
- Existing competition by other products in the market.
- Expected production life.
- Degree of design complexity.
- Potential savings as a result of value analysis application.
- Any previous value analysis exercise.

(b) Data Collection

All the relevant information for the selected product was collected, such as :-

- Overall specifications
- Lists of parts
- Parts costs - factory transfer cost (F.T.C.)
- Listing of parts functions

(c) The Formation of Function Family Tree

The reason for forming this function family tree was that value analysis would have to be applied to the lowest functional level and it was only through the formation of this tree that the relative functional areas could be allocated to decide which area the effort should be cocentrated .

(d) The Formation of Function -Cost Matrix

Using the judgement of the value engineer, utilising the cost breakdown sheet and the function family tree , a function / cost matrix was constructed. This matrix helps to allocate the estimted total cost committed for each individual function and consequently aids in determining high cost functional areas.

(e) The formation of Function Percentage of Cost Histogram

Using the outcomes of the function / cost matrix, the individual functions were plotted in a histogram against their respective percentage of the cost. This will directly highlight those functions of highest cost.

(f) The selection of Parts for Value Analysis

On the basis of function / cost allocation , parts which contribute to high cost functions were selected as candidates for analysis. The final decision about selecting the right parts for analysis is based on part cost, stock level and chance for obtaining licence for then new designs.

(q) Selection of Value Analysis Team

Following the selection of candidates for parts for analysis , a team of value analysis application was selected. This consists of the following :

- Team Leader : (Value Engineer , previously Electrical Engineer)
- Electrical Designer ,
- Mechanical Engineer,
- Service Engineer,
- Purchasing Officer,
- Marketing Officer,
- Sub-contractor (only in certain cases).

(h) Type of Impelemented Changes - Improvement

As a result of the application of value analysis by the selected team, certain improvements would be achieved such as:-

- Changing material or process for the same design
- Leaving things off such as paint for finishing process, etc.

This was to be expected since changes on design have to be limited. Therefore, it was believed that the exercise in this particular instance is purely a cost reduction one.

In total , value Engineering Activity was devided into 80% value analysis (application of techniques to product at production stage,), 10% trainning and 10% value engineering (application of techniques to products at design stage).

4.2.6 RESULTS OF AN INVESTIGATION CONDUCTED AT PYE UNICAM (CAMBRIDGE)

(I) P R O D U C T

Scientific Instruments

- Chromotography
- Spectro
- Chart records (flat bed)
- Chemical and trace elements analysis equipments.

The product is of a relatively short life (up to 5 years) and its main specification is the degree of accuracy.

Systems Involved in Product Design

- Optical System,
- Electronic System,
- Gas Handling System,
- Sample Handling System,
- Mechnical System,

(II) PROCEDURE OF MARKETING DEVELOPMENT AND MANUFACTURING

(a) Product Cost Targeting and Specification Definition Stage

When there is a plan for development new product, the management allocates the initial cost budget for the development and manufacturing of the whole product. Subsequent to this, wide market research starts, to investigate :-

- Exact customer requirements. Type of chemical solutions which have to be analysed and the exact degree of accuracy required.
- The selling price which the market would stand.

Based on the establishe customer requirements, the product specifications are clearly defined. At this specification definition stage, Value Engineering activity was carried out to a maximum to ensure that the established specification is not to exceed the customer requirement. It is claimed that it would cost twice as much if the customer requirements of degree of accuracy was mistaken as 0.1% instead of 1%.

(b) First (Project Approval) Stage

Based on previous experience the product manufacturing cost is estimated for the given specification . At this stage, other competitive products may be looked at , analysed and compared with

existing design.

If competitors ideas ,i.e design, proved successful, cost of producing these designs inside PYE is estimated as well .

Subsequent to this detailed study, estimated manufacturing cost for the new product is determined with + 20%variations in cost.

Estimated manufacturing cost and expected selling price are compared and it is the management's decision whether the project can proceed . This decision would be based on the expected profitability.

(c) First Design Stage

If the management gives the go ahead , a project leader was allocated and a meeting was held between parties concerned as follows :-

- Project Leader (Physicist).
- Designer .
- Value Engineer.
- Production Engineer.
- Cost Estimator .

At this meeting customer requirements would be reviewed and compared with the established specification (degree of accuracy) .

Main functional ideas of the new design were generated and reviewed by:-

- Production Engineer for productivity .
- Cost Engineer for estimating manufacturing cost.
- Value Engineer for assessing the value of alternative designs.

Rough sketches could be drawn at the meeting and Designers would be asked to produce some sketches with nominal dimensions as a result of this meeting.

Manufacturing methods and materials should be roughly known at this stage.

(d) Prototype performance Assessement

According to the sketch drawings a prototype (bread board model) would be fabricated for testing.

The prototype would be tested and the following factors should be assessed :-

- Degree of accuracy
- Availability to be manufactured by conventional economic

manufacturing method

- Cost of manufacturing
- Reliability and service cost

There could be more than one prototype under test, and again Value Engineering activity would be involved here for the evaluation of alternative designs (prototypes) according to their different performances.

(e) Second (project Approval) Stage

The best prototype would be chosen (option design). At this stage, the cost of manufacturing should be critically reviewed again , the value of the capital required for investment was calculated , services cost would be estimated and reported to the Board of Directors for a decisions.

(f) Second and Final Stage of Design

If the proposed design was agreed by the management , sketch drawings were productionised, dimensions were corrected and tolerances should be specified. The designers drawings were then released for production .

At the end of the prototype acceptance stage, Value Engineering would not interfere.

The stages of product design and developmet were shown schematically in figure(4.6). It can be seen from the figure that Value Engineering finds its widest activity at specification definition stage, where the wrong definition can cost up to twice as much .

4.2.7 RESULTS OF AN INVESTIGATION CONDUCTED AT "FORD MOTORS - ESSEX"

People approached for the investigation : Manager of Value Engineering Department

(I) PROCEDURE OF DEVELOPOMENT OF A NEW FORD CAR

(a) Establishing the Car Overall Target Cost

When the design of a new car model is taking place, the main concept is to allocate the target cost for the new design sub-assemblies and components. This target cost would be based on actual cost of the corresponding sub-assembly in previous models plus cost invarients which are allowed for the new model part design.

The target cost should be be approved and signed by" Henry Ford the Second".

These targets were allocated to the motor car sub-assemblies and parts concept designs and it would be the designers, as well as the production engineers task to meet these targets.

(b) Establishing Market Requirements

The idea of introducting a new model follows a good market research which aims at investigating thoroughly the customers needs. This would also include investigating the new style required , different mechanisms , fuel consumption , speed , etc.

(c) Design Stage

According to the market research , the designer starts to look at each sub-assembly individually in order to make the necessary design changes which would suit the new customer requirements. At this stage, design target costs were formed for each individual sub-assembly and components (as mentioned before).

In order to meet these targets the designer relies on the assistance of the cost estimators who should be able to estimate production cost for any part on the design board.

There were two types of estimators:-

a) Estimators for made-in parts

b) Estimators for bought - out parts.

Estimators , as they have a good knowledge of manufacturing techniques, can advise of any design changes for producibility or reducing manufacturing cost, on both component level or

sub-assembly level. Estimators can even advise the suppliers and the Sub-contractors of ways and methods of producing particular components or parts.

(d) Design Approval Stage

At this stage, major and minor design decisions can be made by the management, decisions such as "made-in" or "bought-out" , or "investing capital" for new plant installation , etc.

Decisions concerning installing new plant have to be supported by approval of 45% return in capital investment . This figure wass directly affected by the financial situation ; it is normally 30%.

(II) VALUE ANALYSIS AT FORDS

A Value Engineering Department was established with two main objectives in mind:-

- Investigating ways of producing a car which will give :-
  a) Aesthetic value.
  b) Better performance for lower cost.
- Investigating feature level in cars.

Application of Value Analysis

When the value analysis techniques was studied, in order to be introduced as a tool for cost reduction , it was found that the application of the technique in its existing developed form would be inappropriate for Ford's case. This came from the fact that, ideas which could be generated by the value analysis team , would not found enough support for implementation . These ideas would always be critisised and consequently rejected for one reason or another by other functions of the organisation. Therefore , it was intended that value analysis methods of investigating and implementing new ideas should be developed in a way so that these ideas would have sufficient evidence to prove that it would be an improvemet to the existing design. For this , a new philosophy stemmed. Since every Ford car model has its competitive model of other makes which would give nearly same requirements and sold at the same price level , it was suggested that alternative new ways of performing a specific function at a lower cost should be investigated inside these competitive models. In other words, Ford car parts selected for value analysis application should be

evaluated against corresponding parts in other car makes of the same level of performance and economy in order to arrive at best value design.

The reason behind this was that the design of an actual part which was in operation would always be able to prove itself, providing that evidence shows that it had more value than the corresponding part in Ford car, and it was of the same economical level if it was to be produced or bought by Ford.

Selection of Competitive Cars for Analysis

Selection of cars of other makes for analysis and evaluation depends on the Ford part under consideration . It is known that every car manufacturer was specialised in manufacturing specific parts of the car exceptionally well ,such as gearboxes, engines, body panels, etc. Accordingly , cars are selected when their specialised parts are corresponding to the Ford part under study.

When the part was selected for study it is compared for :-

The Shape,The Mechanism or Design.

There were two engineering analysis who are responsible for carrying out the analysis and evaluation of the two parts as follows :-

- A tear down analyst, who would be responsible for dismantling and knows how it has been assembled.
- A technical analyst, who would be responsible for examining very closely the design of the part under consideration .

Every part would be checked for:-

- Cost.
- Weight.
- Operating effeciency
- Fatures
- Quality
- Serviceability

Cost - it would be the estimated cost of producing the part inside Ford or the cost of buying parts from Ford suppliers or sub-contractors. The two parts (Ford part and competitors part) were compared together for the above criterion by using a specifically developed chart and a decision would be made as to which part has the better value.

4.2.8 RESULTS OF AN INVESTIGATION CONDUCTED AT ROLLS ROYCE (1971)CO.LIMITED AEROENGINE DIVISION , DERBY

-People approved:Design services manager

I) G E N E R A L

The Rolls Royce aeroengine division employs 36,000 workers in the Derby Workers. The division produces a wide range of aeroengine and gas turbines.

No standard products were produced, but the company develops and manufactures families of engines to suit families of aeroplanes. Engine thrust varies between 5,000 to 50,000lbs.

II) THE PROCEDURE FOR THE ENGINEERING, DESIGN AND DEVELOPMENT OF AEROENGINES

The process of designing and manufacturing aeroengines is considered a very complex activity due to the high performance and reliability standards to be achieved by the end product. Also , the volume of capital invested to complete the excution of any specific engine project from specification to production stages would be extremely high in order to cover the cost of engineering, development, special materials, special tools , testing and processing of engine hardware. Due to the above, the management of Rlls Royce have adopted a certain approach during product engineering aiming towards achieving a product which should meet the pre-established reuirements and standards at the minimum possible production costs .

From project definition stage to production , the engineering of the engine goes through major stages, during which the engine design should be subjected to severe scrutiny by almost all departments of the organisation, fig (4.7).

The project Definition

At this stage, participants from inside and outside Rolls Royce meet to agree to the main engine specifications, for a particular engine to fit a particular aeroplane.

The following people meet :

a) A project Premliminary Designer from Rolls Royce.

b) Representative from Aircraft Manufacturer.

c) Airliner Customer Representative.

As a result of the meeting the following criteria are agreed upon :-

i) Certain engine thrust.

ii) Certain specific life of parts

iii) Certain specific life of parts.

iv) Guaranteed engine weight.

v) Guaranteed overhauling costs (e.g. turbine disc has to have a life of 20,000 cycles, take-offs and landings , before it can be replaced)

Failing to meet the above guaranteed values, the company (Rolls Royce) would be exposed to pay certain penalties, e.g. Rolls Royce will have to replace to the airliner, without costs, the parts which did not meet declared lives. Also failing to meet the specified thrust of engine or specific fuel consumption could result in Rolls Royce conceeding a reduction in the engine selling price. The highest penalty the company could be exposed to is in the case of not meeting the guaranteed weight, since this would have an impact on the overall economic and functional performance of the engine. Therefore, during the production stages, continuous effort should be made to ensure that the above guaranteed engine specificaions are satisfied at minimum costs.

Subsequent to the above meeting and prior to the product engineering, the management of Rolls Royce decide upon an initial target cost. This target cost would be based on the expected market selling price, for given engine specification, and on the company acceptable level of profitability. The target cost would be used at a later stage as a guidance to Engineers and Designers.

<u>The Preliminary Design Stage</u>

At this stage, the major objective would be to arrive at optimum overall functional design and layout for an engine which would satisfy a given engine specifications for the pre-established weight and cost . In order to accomplish this task , co-operation of the various functions of the organisaion with the design function was effected to bring all the required knowledge to help on the design board. Two main steps were taken in order to arrive at the final concept designs, as follows:-

a) Generation of alternative designs.

b) Evaluation and assessment of alternative designs.

a) Generation of Alternative Designs

As the company produces a family of engines to suit different applications, they might , when required, tailor any engine to suit any particular air frame. Therefore, the designer at the conceptual stage modifies an existing engine design to meet new requirements, e.g. the designer would probably be asked to design an alternative engine with more performance and efficiency for the same or smaller volume. This , for instance, will lead to a design of an engine with an 8 stage compressor instead of 10 stages .

The normal design practice for a fixed number of compressor and turbine stages, could accommodate several possible combinations of the number of shafts, and the type of combustion chamber which could meet the particular function requirements. Normally , five to seven designers, each one responsible for part of the engine, produce several alternative concept designs which would meet the required aerodynamic performance. At this stage, full consultation with the production engineers and manufacturing specialists takes place to assess, without any formal awareness of cost, the feasibility of producing the proposed alternative desings using in-house production facilities or bought-out processes.

B) Evaluation and Assessment of Alternative Designs :

Subsequent to the development of the design alternatives, an evaluation process commences .This aims at assessing the performance of each alternative design, from both the functional and economical point of view,i.e. running cost, as well as assessing the estimated manufacturing costs, with a view to arriving at an optimum design which would meet the pre-established specificatons within the pre-allocated target weight and cost.

The assessment of functional design and performance is carried out by a group of designers including the Chief Designer, Aerodynamic Engineers and Mechanical Engineers.

The approximate weight of each proposed design would be estimated by a group of Weight Engineers . The anticipated of the total manufacturing cost for each design is estimated by a group of Cost estimators, in consultation with Manufactring Specialists and

Purchasing Officers. At this stage,since the required cost estimates are only approximate , cost estimators relay basically on global , i.e. imperical , cost data and not on detailed costs. For example , they can estimate the cost of each part of the engine, such as combustion chamber, by comparing it with a similar corresponding part in previous engines, allowing certain cost variances.

Also , sub- contractors might be brought in to provide similar cost estimates for parts which intended to be bought -out. In the case of relatively new design , manufacturing specialists, either from inside or outside the company , could be consulted for cost estimates.

Beside the weight and cost estimates, each design is assessed to determine-the effect on the engine direct operating cost (D.O.C.). The assessment was carreied out by the Aircraft Performance Group (A.P.G.).

Given all the relevant data, each design could be carefully assessed from the overall point of view weighing its characteristics with each other. As a result,several acceptable designs wil be available, each will have its advantages and disadvantages. For instance, for a given required thrust, there could be more than one design , each with a different number of compressor stages. Lower compressor stages, although would result in lower weight engine and possible lower manufacturing costs,would at the same time require higher powerand consequently would lead to higher specific fuel consumption (S.F.C.) and higher direct operating cost (D.O.C.)

On the other hand, more compressor stages, although needing less power and consequently less (D.O.C) ,would have a higher weight and possibly higher manufacturing cost. The optimum design selected would be the one with the best possible combination of the various parameters.

The value of the design can be generally measured using the following equation:-

V= f(T.w,Cm, DOC)

T= Thrust

W=Estiamted weight

Cm=Estimated manufacturing cost

DOC= Direct Operating Cost

The optimum final selected design may be a combination of different proposed designs. Value engineering activity at this stage would be devoted to the valuation of the alternative proposals, using past experience with previous engines. Value Engineers will also use a universal formula combining the engine weight, cost and S.F.C. to help determine the best value design. Fig . (4-8) shows schematic representation of the involvement of the various functions of the organisation at the preliminary design stage.

The Basic Design Stage (Concept Design)

This stage could be considered complementary to the preliminary Design Stage, as the main objective was to challenge the concept design to ensure on a broad scale the consistency of the pre-established specifications with the engine weight and cost. Fig. (4.9) shows schematic representation for activity taken place during the design stage.

Based on the preliminary cost feasibility study , the company board would decide upon a new realistic target cost to which the engine has to be designed. Together with the target cost, a target weight was allocated to the new design.This target weight would be based upon the reported weight estimates from the preliminary design stage and on the pre-established guaranteed weight which had been agreed upon with the customer.

At this stage the design was developed further to establish the main features for each sub-assembly which would meet the pre-established specifications within the allocated target cost and weight. In order to accomplish this task , the designers would be kept in close contact with different groups of specialists to help in different areas.

For example , production Liaison Engineers , who represent different Product Centres would be at all times resident with the designers to ensure that the proposed designs could be produced within the existing facilities. If design requirements are found to be too complex to be met by the capabilty of existing processes, an arrangement can be made to adopt possible bought-out processes. Managers of Product Centres have to sign for the design eventually before it is released for detailing .

Cost Estimators would also be able to continuously provide a rough estimate of the manufacturing cost of the various sub-assemblies and components. They would also be able to advise the designer on a broad scale where costs tend to be incurred, i.e. high cost areas, and where improvement would be effected. In doing so , Cost Estimators have to rely on their knowledge of the manufacturing side or on approaching the Production Engineers to advise on methods of manufacturing and tooling . Also , they rely on historical cost data which would indicate the cost of manufacturing similar sub-assemblies or parts.

Similar to the Cost Estimators , the Weight Engineers would be directly able to provide good estimates of the expected weight for the proposed design and in turn would be able to allocate areas where weight can be excessive so as to guide the designer to areas where improvements should be made. Weight estimates of various parts of the engine are determined by comparing with similar previous designs. The Value Engineering activity , at this stage, would be devoted to the mere duty of allocating high cost and high weight areas. In Value Engineering language these areas could be called poor value areas. These are areas where the estimated manufacturing costs or estimated weights would be unnecessarily excessive, i.e. higher than the allocated targets for the particular functional area under consideration and given specifications. This particular task is performed using design functional analyis and design function cost analysis.

In applying design functional analysis , the functions of all the proposed sub-assmeblies and major components were analysed in details to establish the primary and secondary functions. These functions in turn were correlated with the pre-established product specifications and the product requirements to ensure that they are the minimum necessary to satisfy these specifications and requirements. Major or minor parts which provide unnecessary functions should be eliminated or had their design modified. To do that , full understanding of the requirments of every part of the engine is essential and for that matter, Value Engineers at this stage should consult and fully co-operate with aeroengine engineers and designers. In applying function - cost - analysis the cost of providing each function is calculated by estimating the cost of

producing each individual part and contribution of his particular part in providing the pre-defined function. These estimated function costs are then compared with the costs of producing the corresponding function in a previous engine to highlight any excessive costs which could have been incurred unnecessarily during the design stage. All similar functional areas of relatively high costs are systematically allocated and highlighted for improvement.

At the end of this stage the following is determined for the engine:-

1. The main functional arrangement for the engine togehter with the rough shape and size of major sub-assemblies and parts.
2. Clear statement of the specifications and requirements for every sub-assembly.
3. Overall target cost and weight for the complete engine and target costs and weights for the individual sub-assemblies.

The Engine Main Design Stage (Final Stage)

As the engine design enters the main and final stage, given the outcomes of the previous design stages, 30-35 designers are set to develop the engine detailing design . Each designer deals with an individual sub-assembly or part , taking into consideration all the parameters and constraints associated with the particular part under consideration .

The main objective at this stage would be to develop the engine individual components design in the best manner, to meet the pre-established specification within the pre-allocated cost and weight targets. Fig. (4-10) shows the involvement of other organisation functions with the design function . Stress engineers, metallurgists, production liaison engineers,cost estimators and value engineers are at this stage, involved with the design team on a full time basis to support design activity in achieving the pre-established requiremet for every part of the engine . The stress engineers and metallurgists would recommend to the designer several materials,indifferent forms which would be suitable for the particular application but perhaps results in different costs and weights.

The production liaison engineers, who represent the different

product centres, provide the designer with the different manufacturing process which would be capable producing th shape and size of the part under consideration .

They may advise of the available in-house as well as possible bought-out processes.When a decision is made as to which manufacturing process to be called for , the production liaison engineers and in-house manufacturing specialists then advise te designer as necessary , to influence within the given component design,the particular features which would ensure the productibility of the part, using existing facilities, as well as the quality of the produced part. If the part is to be bought-out instead, or sub-contracted , the specialists concerned are then brought in for consultation in a similar manner. On the basis of the advise of the metallurgists and the production engineers,the designers may develope several alterative designs , which in turn are challenged by other groups of specialists to assess their suitability to meet the pre-established requirements. The weight engineers estimate the weight of the proposed part design(s) on the design board. When a final design is settled they have to ensure that the target weight has not been exceeded either on a component level or sub-assembly level.

Similar to the weight engineers,the cost estimators estimate the direct manufacturing cost for each component design . For this , they have to rely on historical cost data for currently produced engines.

This data was made available in different forms, as follows :-

Cost Estimating Sheets

These are loose sheets which contain a complete cost breakdown for individual parts and components for engines currently in production. They are used by Cost Estimators, Value Engineers and Designers.

Project Engine Estimating Library (P.E.E.L. Tapte)

These P.E.E.L. tapes are only used by Cost Estimators and they contain complete information related to previously manufactured engines which in turn consists of :-

- Part description

- Material costs

-Man hours

- Total costs

Value Engineering Manual

It mostly contains curves and graphs which represent the relationship between finished part weight and original billet weight for forgings. The graphs are drawn up for different alloys and different parts. Using the value of the billet weight, material costs can be accurately established.

However,from experience it was found that although the above data is useful to a large extent , in the aerospace industry there is no substitute for a resident Cost Estimator in the drawing office alongside the Designer and Draughtsman. This comes from the fact that, in this industry, most of the designs are in the form of large complex castings and forgings which requires an experienced person to identify the specific areas and features which contribute most to the cost and in turn to advise of the necessary modifications which would result in reducing these costs. In so doing, the Cost Estimator has to rely on his background knowledge of production Engineering or to approach the manufacturing specialists as and when necessary . Ultimately, he will have to make sure the cost targets of individual components have not been exceeded.

If the allocated target weight and cost for any part is exceeded,the weight Engineer and the Cost Estimator have to report to variances the Chief Designer and Chief Engineer. The function of the Value Engineer at this stage is to co-ordinate the efforts of he various specialists groups and to help the Designer to decide upon an optimum component design which meets the pre-established requirements at the pre-allocated target cost and weight.

Although at this stage it is necessary to ensure that all the guaranteed values are met by the proposed design, certain designs may eventually be accepted where some parameters are traded in against others. For instance, the Value Engineer may suggest to the Designer to accept a design where higher material cost can be compensated by longer part life and consequently less maintenance costs, and so on .

In order to establish the overall value of any part design the Value Engineer may use a certain optimisation formula. In cases where the design of any part does not fully meet the pre-established requirements , the value Engineer may suggest an alternative solution i.e. an alternative way of manufacturing and accordingly designing the particular part under consideration . Again , for this matter , he may have to rely on the help of another specialist who in turn has to be brought to the design board to give advice on the spot.

Design Detailing

Draughtsmen and Designers use design manuals and drafting manuals in order to assist them in drafting out the final design of each individual component at the detail drawing stage. Although there is a continouous discussion carried out between P.L.E.S., product Centre Managers and the Designer at this stage to reach the components final design to suit the roduction system , there is no such rigid system or procedure which are followed to optimise these final designs for production . For this matter, Designers are provided with check lists which contain up to 300 instructions to Guide Designers to design for forgings and castings. Small components such as bolts, nuts and washers are standardised. The main components of the engine, such as shafts, discs , blades , etc. cannot be standardised because the shape and the size of these components have to be changed to change the efficiency of the engine.

A coding system is used in the company , to describe the different parts which are either manufactured in or boughtout of the factory . The code number is of 6 digits to describe parts by shape by shape and size. However , this code number is always neglected and has never bee used by the Designer , as any part always falls in a specific product class, such as shafts, blades, discs , etc., and they are the same for each engine , turbine or compressors.

Variety reduction regarding material and standards are considered all the way throughout the development of new products.

III) WEIGHT AND COST CONTROL PROCEDURE

As has already been discussed, throughout the product development

and manufacturing , a weight and cost control programme is followed, in order to meet the weight and cost targets.
The engine is broken down to a number of packages, and each package is in turn broken down to a number of modules. Weight and cost targets are allocated to each module. The total of the weights and costs for all the modules is the weight and cost target for the whole engine. Deviations from the final targets are reported to the chief designer and chief engineer by the value engineer.
As the engine enters the production stage, the cost and weight control procedure continues during manufacturing. Each Product Centre is made responsible for achieving the cost and weight targets as being fed in from design .

IV) VALUE ENGINEERING FUNCTION

The department was established in 1957 under the name of "Desing Cost Control " and was then given the ame of " Value Engineering " in 1964 and is now known as Design Services Function , as Value Engineering is a part of its responsibility.

Main Activities of the Design Services /Value Engineering Department

a) Applying the classic work of Value Engineering, throught the application of the job plan phases, in achieving a better value product in any value problem. Reducing total cost of any part is normally achieved through reducing the manufacturing cost of the product combination of either using different material or reducing existing material cost.
b) Assisting the Production Engineers (Planning and Control) in solving some production problems or establishing a new technique to offer a particular service through out the application of the Value Engineering job plan phases and rules.
c)Train almost every person on the technical side to use the philosophy of Value Engineering in solving his own departments problems.
d) Continuously apply functional cost analysis to compare old design and new ones W.R.T number of omponents involved for each designed fucntion .

V) PRODUCTION FUNCTION

The aeroengine industry is of a batch manufacturing type.

Production System

Rolls Royce produces the same type of products with very similar designs and use the same type of parts for each product with slightly different shape and size. For this reason , they have considered grouping identical parts to be produced in separate product Centres, e.g. shafts are all produced in one Product Centre which has its own production planners and management .All the Product Centres are under the control of ,and receive work from, the main work centre.

The machine layout inside any of these prouduct Centres is of functional type, where all the identical machines are grouped in separate sections.

4.2.9. RESULTS OF AN INVESTIGATION CONDUCTED AT BRITISH AIRCRAFT CORPORATION WEYBRIDGE DIVISION

People approached for the investigation : Manager of Value Engineering

(I) COMPANY PRODUCTS

In Weybridge division , there are 5,000 workers employed. B.A.C. develop and produce Civil Aeroplanes air frame constructions (engines are bought -out from Rolls Royce).The company have produced so far :-

- VC 10
- Vanguard
- 1-11 200)
  400)
  500)
  475)
- Concorde

Parts Manufactured at Weybridge

The plant manufactures all the air frame parts including :-

- Fuselage; Forward, Centre , Rear , Wings , Undercarriages, Fins, Rudders, Engine bay , etc.

Plus all hydraulic installations :-

- Landing gears, automatic doors, pipework etc.

Plus the whole interior of the aeroplane seats and other items.

(II) THE DESIGN CONCEPT

The Design office is responsible for designing 150,000 components for an aeroplane of an average size. The size of any aeroplane component varies from very small component sizes such as a 0.5' set screw to a skin panel of very large size, e.g. 45' x 20' . Also the components differ in shape from the very simple shape of metal sheets to components of very complex shape - usaully of small size.

The main task of the designer in B.A.C. is to design a component which is :-

- of a strength of required standard
- of very high reliability

- of minimum possible weight

The above requirements put constraints on the material chosen as well as on the manufacturing process. A very simple example to show the developent in component design for an air frame construction is the design of the air frame skin panels.

In the early model aircraft, these panels were designed as shown in Figure (4.11a). It consisted of an aluminium sheet with beams of aluminium alloys riveted to it.

Previously , the practice was to weld the extruded beams to the sheet, but welding has been found to be very difficult when a metal like aluminium is used.

The above design has proved inefficient with the very high pressures-and temperatures experienced when the aeroplane has to run faster or fly higher. All the joints used to break up due to the high vibration caused by the engines.Due to the above, the design of the panels has changed as shown in Figure (4.11b)&(4.11c)

From the figure, it can be seen that the panels had to be machined compeletely from solid metal (aluminium) usually of 2" thickness, and this is the only design so far which has proved to have a high efficiency and reliability accompanied by minimum weight. Many other components similar to this , have to be machined from solid instead of using any forming process or using riveting or welding. it is believed that by using this process the mateial utilisation is nearly 10% only and 90% is completely wasted material and is to be sold as scrap.

<u>Rasons for Producing Designs Requiring Machining from Solid</u>

This can be best explained by reviewing the requirements or the specifications which are stated by the customer when ordering any civil aeroplane.

These can be summarised as follows :-

- Range (distance of flying)
- Payload (Number of seats inside the plane)
- Cruising speed
- Airfield performance (take -off and landing distances)
- Noise

The above requirements can influence the method of manufacture and

the design components as follows :-

(a) Regarding the range, the further the plane is required to travel, the more fuel is needed to be carried in the plane's tank and this means more weight is added. Likewise with the payload , the more passengers getting into the plane, the more weight is put into it. The above will impose on the designer to limit the weight of his product as much as possible.

(b) Regarding the cruising speed and airfield performance, any component or assembly must be of a high strength to resist the tensile bending and fatigue stresses applied on every part, due to :-

- High speed
- High Pressure
- High thermal stresses, etc.

the above will influence the design in the following way :-

- Any part consisting of several components, means that fastener or joints are needed to be put into the part and this will consequently lead to :-
- More weight being put out the part.
- Also a more unreliable part, as fasteners have proved inefficient with the conditions metnioned above.

This will impose on the designer to minimise the number of components involoved in any part, and to design parts of only one component if possible , regardless of any other considerations concerning productivity of the part or the cost of production .

Parts or components produced by any forming operation (processes) like castings or others, will not be of a high resistance to tensile stresses or fatigue limits. This will impose on the designer to design components to be machined rather than formed.

(c) for weight considerations only light alloys are specified as the chosen material ,for almost all parts of the air frame construciton ., except some parts, have to be made of harder material like titanium or steel when the mechanical requirements impose the selection of these types of materials .

From the above points , one can imagine what the shape of the frame parts should look like. They have to be reliable and consequently they have to be:- Simple , light and strong

The more sophisticated the aeroplane, the more it moves the design

to be machined from solid. Figure (4.11c) shows an advance design for a skin panel machined from solid used in the design of the Concorde.

More than 60% of Concorde parts are machined from solid. Usually , the rest of the frame parts would be metal sheets. Forged or extruded components, where strength is not required , can be used.

Materials Used :

- Aluminium alloys are used everywhere in the construction as long as its mechanical strength is satisfactory .
- Parts required to be of high mechanical strength are made of either titanium or steel (titanium is lighter but more expensive than steel).
- Where rotation or relative dynamic motion occurs, parts cannot be made of titanium because its bad resistance to friction and corrosion , so steel has to be used.

Cost Comaprison Figures for Various Employed Processes

Parts made by forming such as all metal sheets or similar parts:-

- Material cost 10%) including O.H.
- Labour Cost 90%)

Parts machined from solid :-

- Material cost 50%) including O.H.
- Labour Cost 50%)

This is obvious and comes from the fact that material utilisation of first parts is nearly 70% while it is only 10% with the second parts.

(III) THE PRODUCTION CONCEPT

It is claimed that their type of production is of batch manufacture, as they receive orders for aeroplanes in batches, but a closer look at the system would reveal that it is in fact of a jobbing type.

The type of machine lay out is functional, one where all the lathes are in one place, etc.

the existing machines are large Roller Milling Machines , End Milling Machines and large N.C. machines (Marwin). The Milling machines are for machining parts like skin panels and others. the

N.C. machines are for machining rather complicated and awkward parts.

Manufacturing process

The following processes are employed :-

- Machining from solid (for major parts of the plane)
- Hand forgings
- Extrusion
- Chemi-etching(for very special jobs)

(IV) VALUE ENGINEERING

The department of Value Engineering had been established in B.A.C since 1964 . It was acting as a separate function from the other departments, but now it is part of the drawing office. The Value Engineering team with their manager are reporting to the Chief Weight Engineer .

In the aircraft industry , the main task of the Value Engineer is to ensure product design with best value regarding efficiency , weight and cost. As in Value Engineering rules in general, best value product does not necessarily mean a product of a minimum initial cost,i.e manufacturing and development cost. In the case of the aircraft industry, the aeroplane has to achieve a combination of various characteristics which will include running and maintenance cost.

The following are activities carried out by the Value Engineering Department to support the design office :-

- Supply accurate information (graphs and curves) to give reliable figures of the payload revenues for each pound of weight(£/lb saved). Less weight - more passengers on board - longer range

- Supply graphs to give relationship between reliability /cost , performance / cost, etc. Also they evaluate necessary functions and give monetary value for these functions such as :-
- Cost/power (hydraulic units)
- Cost /work done
-Provide the designer with cost data manual .
- The value Engineering department scrutinise any drawing which goes out of the drawing office.

- Carry out individual exercise to improve the value of some parts of the air frame (conventional Value Engineering work).
As a matter of fact , they do not carry out exercises on parts so as to design the part for particular production system . Also , they do not design for their machines nor do they even give priority to manufacturing cost when they evaluate any item or function .

Cost Data manual

This manual has been developed by Value Engineering to give the designer some feeling of the cost involved regarding some raw materials - fasteners and manufacturing costs, and by the company law, this manual should not be overlooked by the designer while he is forming his initial design .
Cost of aluminium alloy billets (different diameter size) and of metal aluminium sheets are stated. Also some machining and forming processes (casting, forging) costs are given .
However, the value Engineers are not satisfied with this manual as it is and they claim that it is hardly used by the designer. Even when the designer uses the manual he still has a lot more to do in order to use the information given before he can estimate the cost of any proposed design .

Suggestions from the Manager of Value Engineering

- There has to be a central committee who should sign the drawing made by any designer (initial drawing) , regarding the cost of this design. The committee should consist of : - Designer, Value Engineer, Production Engineer,personnell form Aerodynamics and Weight Departments.
- A computer programme should be developed to assist in showing the actual cost of standard parts (wings fuselage, etc.) and also to show how the change of design of any air frame (i.e. to a larger one) would affect the cost of this design.

4.2.10 RESULTS OF AN INVESTIGATION CONDUCTED AT BRITISH AIRCRAFT CORPORATION MILITARY AIRCRAFT DIVISION - PRESTON AND WARTON

People approached for the investigation : Design Support Manager

(I) G E N E R A L

Location

The B.A.C. Military Division main works are located in Spa Road in Preston. The design and drawing offices are located in Warton, where the assembly and test of the aeroplanes takes place.

Number of Employees : 11,000

Company Products

The company produces the air frame of a military aircraft. So far they have developed and produced the Cambra , the Jaguar fighters and the MRCA (Multi Rotor Combat Aircraft).

(II) THE DESIGN CONCEPT

(a) Main Specifications Required for the Design

- Landing distance
- Flying hours
- Cruising Speed
- Volume of fire

Initially , the company would have to conduct the appropriate market research and has to design to a demand and not to its own design.

The main constraint in the design is the weight of the air frame, as the weight is important in considering the range and the performance.

(b) Concept Stage of the Design

Definition of Design Specifications

At the early stage of the design, a team of advanced project designers meet to finalise the specification and agree to the design. The team would be a group of designers and would represent the following departments:-

- Stress
- Aerodynamics
- Electronics
- Systems
- Hydraulic Experts
- Fuel Experts

The team will have a director , known as the director of Advance Project and in some cases there would be two directors allocated for the team :-

- Advance System and Technology
- Chief of Research

At this stage of the meeting , no production engineers are involved in the discussion at all , as they would have little effect on the earodynamic shape of the aeroplane.

Normally, the designer developes only one design for the specification required, but sometimes he is forced to produce more than one alternative , and these alternatives would be evaluated by the Value Engineers to select the best alternative design.

Desinging for an Existing Manufacturing System

Designers would endeavour to design for the existing machines , but they do not treat it as a main issue. This is basically because the functional requirements of the Aircraft are far more important than production requirements. For instance, the company recenlty had to buy new stretch forming mahcines worth £1/4 M to meet new design requirements.

The Use of New Processes

To investigate new manufacturing processes and materials, a team of engineers known as Material and Manufacturing Development Team , usually consisting of 8 to 10 people, go everywhere at home and abroad to look for new technolohy . Any new information is recorded on sheets,known as Work Process Sheets, which are prepared by the standard design office and distributed to the designers for use at the concept design stage.

Cost Estimating

No cost information at all is fed to the design office at any design stage to be used by the designers. Every job has to be treated individually as it comes, and the cost is estimated by experienced Cost Estimators or Value Engineers. It has been claimed that, from experience, it is impractial to formalise any production cost information for use in the Aircraft Industry .

Material Selection

The designer has to specify the material himself , and if in doubt he has to refer to the material department, who on their own continuously carry out research work on amterials. The employed materials are aluminum alloys but also steel, titanium , fibreglass and carbon fibres are used when necessary. At the present time, continuous trials are carried out to cast titanium.

Co-operation with other Departments

During the development stage of the design, the following departments are consulted:-

- Technical Officers(stress , weight),
- Planners,
- Research ,
- Mechanical,
- Metallurgy,

There is a good contact between these departments and the designers as regular meetings are held between them .

The Value Engineers carry out the duty of estimating the manufacturing cost of the initital design. At this stage they would be mainly concerned with the material cost and labour hours.

production Liaison Engineers scrutinise the initial design for production , day by day .

Cief Designer has the final responsibility for the designs. There were three of them in the company (Structure, system and Electronics). One of them would have the authority to sign for the final design of aircraft.

(c) Detail Drawing Stage

After the initial drawing is approved, the prototype of the aeroplane is tested on the wind tunnel to feed back to the design office while the detail drawing is being made.

Scheme drawings any drafts are made as a preliminary step in details drawings. These drafts do not contain tolerances at all and are discussed by the following departmets:-

- Stress,
- Weight ,
- Production,
- Value Engineering,

To proceed with the detail drawings, the following manuals are supplied to the drautghtsmen to assist them in forming the final shape of any individual component:-

Manufacturing process Manual

Includes all manufacturing processes, requirements and characteristics.

Design Standards Manual

Includes standard tolerances.

These two manuals belong only to B.A.C. in Warton.

Company Standards Sheets

These standards are made to control the quality of the product . No-one can enter anything into an aeroplane design unless it is written in the standard book .

These standards are established and agreed by the following organisations:-

- I.S.O.
- B.A.C.
- French Partners,
- German Partners,
- Italian Partners,

There are regular meetings between the above peopole to agree to the best standards. The Value Engineers attend all the standard meetings to keep costs as low as possible.

The standard parts manufactured by the company are fixings , joints, washers, nuts, bolts and materials . Standard sheets will also include radii, tolerances, surface finishes, etc.

The following people are responsible for vetting the detail drawings:-

- Design Group Leaders
- Section Leaders

(III) PRODUCT COST CONTROL

A cost control procedure is followed to meet specific cost targets.

Every department involved in developing , manufacturing and testing any component is told the exact money and time to spend on each component. These figures are being estimated and forecast by designers and cost experts. While the part is moving from one

department to another, and also during its developmet inside each department, the computer will inform this department of the actual time spent so far according to time cards, and whether this department has exceeded its time or cost targets.

(IV) CODING AND CLASSIFICATIONS

The coding and classification system currently used by the company is the Nato system and it is not satisfactory from the company point of view, as this system is not used by their sub-contractor supplies or their customers.

The company was trying , to establish an international coding system to give code numbers to parts to be used by every organisation involved in this part ; sub-contractors suppliers, customers, partners, customers of other suppliers.

For example , in the case of British Military aircraft, the code number of any part should be used by the following people :-

- R.A.F. as customers,
- American Companies , who supply R.A.F.with similar parts.
- Marconi , who supply B.A.C with the part.
- Also , French and German partners who are involved in the project.

(V) VALUE ENGINEERING

Value Engineering department in B.A.C. Preston was established in 1962 , and it is reporting to the administration manger, independent of the design and manufacturing bodies.

Main Activities

a) To trace and gather all relevant information which can be of any use to any function of the organisation at any time.

b)To cost exercise and Value Engineer any part or service when required either for the design or the production organisations.

c) Arrange seminars to preach the philosophy and technique of Value Engineering to all departments in the company, and of new starters on the design office.

Information for Value Engineers

All exercises are carried out by Value Engineering on any part to reduce the cost through the use of an alternative way of manfacturing and would be exclusive to this particular part. There

are no banks of information to store any facts about these exercises to generalise the case for the designer, as this bank will always be out of date at the time it is needed unless it is continuouly updated. This way was believed to be less practical than to have a Value Engineer on ite to apply the technique freshly when any problems arise.

There is a list of the mahcines which are available on the machine shop and their capabilities, and is provided to the value Engineers, but has never been used by them as they know everything about the existing machines and in cases when they are in doubt, they have personal contacts to get down to any facts.

Acost library is established and contains:

a) Cost appraisal between 2-3 methods in terms of material cost and man hours.

b) Agreed production rate / hour for different manufacturing processes.

4.3 ANALYSIS OF THE RESULTS AND DISCUSSIONS

4.3.1 ANALYSIS AND HILIGHT OF ACTIVITIES RELATED TO DESIGN FOR ECONOMIC MANUFACTURE AT PLESSEY TELECOM

Minimising product manufacturing cost, at this particular organisation , is achieved at the contracting stage during system design. No formal awareness of manufacturing cost is needed, but product economy is achieved through the efficient use of standard mechnical parts and standard electric circuit designs into an overall system .

The design /manufacture interface takes place only when a new mechnical switch part is designed, which in turn is considered when new market requirements emerge.At this stage, the part manufacturing cost is one of several critical factors which have to be taken into consideration , other factors being the size and the life of the part.

Figure (4.12) shows a schematic diagram of a typical life cycle cost of a telephone exchange unit over 20 years , as published by the British Post Office (70) . From the figure, it can be concluded that te unit manfacturing cost, which is represented by purchasing costs, on average only represent around 15% of total life cycle cost. Other cost elemets, such as instalation , accommodation and maintenance, represent on average 8% , 40% and 37% respectively. This demonstrates the importance of the size and the life of the switch part and explains the reason why these two factors are being considered equally along side the manufacturing cost, during the part design. This also explains why the major part of the Value Engineering activiy at Plessey is devoted to reducing maintenance cost. The other role of Value Engineering application during system or circuit design is purely cost reduction.

4.3.2 ANALYSIS AND HIGHLIGHT OF ACTIVITIES RELATED TO DESIGN FOR ECONOMIC MANUFACTURE AT VICKERS LTD.

Vickers products, as already discussed, represent typical cases of long life span products, where the main objective of the organisation is to increase profitability , or stay in business, by continuously aiming at reducing the roduct manufacturing cost as long as the product is in production .

This is achieved through the application of the Value Analysis organised functional approach . During this approach the most important phase is the allocation of high cost items, where the highest possible savings can be achieved by analysis and improvement.

The design / Manufacture interface, in this particular case, takes place only during the application of value analysis .

This , in turn , is achieved throught the meeting of the Designer with the Process Planner in the presence of the Value Engineer, during the analysis and the improvement phases of the exercise.

Tis interface allows cost savings to be achieved through the adoption of an alternative and more economical method of manufacture, i.e. new tooling and processing sequence , etc., and the consequent change of design to suit the new manufacturing requirements.

4.3.3. ANALYSIS OF ACTIVITIES RELATED TO DESIGN FOR ECONOMIC MANUFACTURE AT HOOVER LTD

Hoover represent typical mass produced products of medium life span which serves a highly competitve market.

Taking into consideration that the overall objective of the organisation is to maximise profitability , it can be seen that when a new product is launched, two basic objectives are assumed:-

(a) Ensuring that the new product has an established place in the market at the right time , in order to be able to compete with other competitive products.

(b) Having established a place in the market, ensuring that when the product is sold at the market price, it eventually yields certain returns on capital invested.

Depending on the particular objective of the organisation at the time, Hoover seems to be adapting their approach accordingly.

As for objective (a) , this is achieved through cocentrating on a speedy design and speedy production without having to pay much attention to the product manufacturing cost.

In spite of the above , however , Hoover designers, during the design improvement stage after prototype assessment, ensure that the final proposed designs are to some extent capable of being produced using conventional existing methods of manufacture. At

this stage, the design / manufacture interface takes place in the form of a meeting between Designers and Production Engineers. (Refer to 4.2.3 IV E).

In addition , at the final design stage, the design / manufacture interface takes place again , by allocating a prodction Laison Engineer to the product design office, to assist in finalising designs for production , including selecting final tolerances, to suit the process under consideration .

it is important to note that at this stage, because its role is also to optimise the selection of tolerances,the Value Engineering function objective considerably overlaps with that of the design / manfacture interface.(Refer to 4.2.3 IV F).

Having established this fact, it is equally improtant to note that because of their knowledge, approach and wider view to any problem. Value Engineers will be in a better position to achieve more favourable results than those which can be achieved by production Liaison Engineers. As for objective (b) , this is achieved after the product has entered the market, by ensuring that the manufacturing cost is kept to a minimum through the application of Value Analysis organised approach to the product at the production stage, by the Value Analysis Team. The main step towards achieving this objective is the allocation of the machine new overall target cost by the management , which in turn would be based on the established market price, the current cost of the machine and an acceptable level of profitabilty for the company . In order to meet this target cost, the traditional Value Analysis philosophy is applied, which includes the allocation of high cost areas, selection of parts for analysis, generating alternative proposals to exsting design, etc., but most important cosidering improvement in the part method of manufacture through change of design. The design/manufature interface activity in this case completely falls within the boudary of value Enginering activity, which is taking a leading role towards reducing manufacturing cost.

4.3.4 ANALYSIS OF ACTIVITIES RELATED TO DESIGN FOR ECONOMIC MANUFACTURE AT LUCAS

Due to the fact that Lucas product are related to other end products, when a new product is launched, the objective of Lucas

engineering and design teams becomes clear and specific, this being ' Getting it right first time ' from all aspects.
In the case of the car lamp , the objective would be to meet the requirements of the car manufacturer at minimum possible costs. For this , and since the lamp functional requirements are not particularly stringent or complex as such , the lamp design is very much production oreintated. Moreover, the functional design of the lamp becomes intergrated with the production design.
Te above is being implemented by influencing the design/manufacture interface to take place at all levels of product design, starting from the early stages. This is evident from the strong representation of the manufacturing and production side in both design teams,i.e. the New Lamp Team and the design Approval Team. (refer to 4.2.4 III).
It can be seen that, in this particular instance, and since the lamp consists mainly of three major components, economising in manufacturing is achieved basically and totally by giving close consideration to the methods of manufacture of each part and the necessary design consideration which would allow these methods to be used economically.
Value Engineering application in such cases is considered redundant since it would only fully overlap with the design/manufacture interface activity unnecessarily.

4.3.5 ANALYSIS OF ACTIVITIES RELATED TO DESIGN FOR ECONOMIC MANUFACTURE AT PYE TELECOM AND PYE UNICAM

In this particular case,it is important to note the significant difference in the role of Value Engineering activity in both organisation in relation to product economy .
In the case of Pye Telecom , products are of relatively long life span. The first serious attempt to reduce the product manufacturing cost, by the Value Engineering function , is made after the product has been long into production. Furthermore, becasue the limitation on the possible design variations imposed by this particualr market. the nature of the changes which can be made to the product to reduce the cost is consequently limited. Therefore having identified all functions of the product,the value engineering functional approach is applied purposely to the lowest level of

functions, where changes can be implemented without having to change the design.Subsequently the resultant saving is relatively small.

This type of activity can be defined as purely ' Cost reduction exercise throught the elimination of relatively costly features '. This , inturn , can hardly be identified as part of larger major activity ,and therefore is in significant to the present investigation .

As for Pye Unicam , basically due to different product requirements and characteristics, the case is entirely different from above. Because of relatively small life span of the product, all serious attempts to economise in product manufacture take place during the stages of product design and development. the Value Engineering activity, in particular, finds its highest reward at the product definition stage, when the Value approach is applied to challenge the product basic functions (i.e. degree of accuracy) against the specific, pre-established market requirements. As a result , the potential saving in cost is considerably high. (Refer to 4.2.6 IIa). This type of activity can be defined as ' proper difinition and establishment of product specification'.

It is significant to achieve the right level of product economy and can be identified as part of larger activity defined as ' product Cost Control '.

In order the support the ' product Cost Control' activity in addition to the key role which is taken by the Value Engineering functions as discussed above, other similar activities are conducted by other functions of the organisation. For instance, the organisation management takes the reposnisbility for product cost targetting, manufacturing cost momitoring and the approval of the overall project. The design/manufacture interface activity takes place during the product design. This is represented by the involvement of the production Engineer and the Cost Estimator with the Design team during the early stages of the design. (Refer to 4.2.6 II)

4.3.6 ANALYSIS AND HIGHLIGH OF ACTIVITIES REATED TO DESIGN FOR ECONOMIC MANUFACTURE AT FORD

The establishement of product and sub-assemblies cost targeting

concept at Ford's is a clear inidication of the significance of the car manufacturing cost as a major criteria for product success.
It is significant to note that in this particular appliation , in order to meet the target costs, the Value Engineering organisation will have almost an identical role to the design organisation, basically in relation to identifying an alternative or new ways of performing certain functions at a lower cost.
It is also significant to note that because of their production as well as cost knowledge, Cost Estimators have a major role in estimating, monitoring and correcting the design manufacturing cost at the design board.

4.3.7 ANALYSIS AND HIGHLIGHT OF ACTIVITIES RELATED TO DESIGN FOR ECONOMIC MANUFACTURE AT ROLLS ROYCE

In order to conduct this analysis , in addition to the results of the investigation carried out at Rolls Royce as outlined in 5.2.8 of this chapter, reference is also made to recent publications which are related to the same subject (71-76).
An over view to the case of designing and producing aeroengines will highlight the fact that, in order to ensure survival , Rolls Royce organisation will always have two major objectives in mind; a short term objective and a long term objective.
The short term objective is relatively obvious and this would be to meet the customer particular demands at a profit, i.e. to provide an engine that meets the specified requirements of the customer and air worthiness authorities in respect of safety performance, reliability and cost of operation , whilst still allowing the Derby Group to be profitable (72). This particular task can be defined as ' The Production of a Commercially Successful Engine'.
The long term objective is to ensure that future Rolls Royce engines will be suitable to meet the fast growing functional and economical demands of the aerospace industry. This particuar task may be defined as ' Engine Value Improvement '. The main activity in this area is the improvement in the manufactring strategies.
The above two tasks are discussed under (I) and (II) below.

(I) The production of a Commercially Successful Engine

This achieved by implementing a total quality approach involving

all functions from design, development and manufacturing through to product support in the field.Within this approach , the main activity is the implementation of the ' Product Cost Control ' programme, during which all those personnel whose actions may directly affect product cost are made aware of their cost obligation , and their performance in carrying out these obligations are regularly monitored and reported. Figure (4.13) shows schematic anlysis of overall activity related to product Cost Control at Rolls Royce.

Close scrutiny to the type of activity involved in Product Cost Control will hgihlight the fact that the most critical part of the programme is the ' Design Cost Control ' where decisions related to product design grossly affect the product manufacturing cost. Figure (4.14) shows schematic analysis of Design Cost Control activity .

(II) Engine Value Improvement

In order to remain a competitor in the large market, Rolls Royce are faced with te non-ending task of increasing the engine performance and output at a reasonable or non-increase in cost. In fact, the present trend is to reduce the overall cost of manufacture per unit thrust , i.e. £/lb thrust.

Standard engineering practices have proved that an improved engine performance and output would demand the highest possible turbine entry temperature (T.E.T)which in turn demands high temperature resistance material for the turbine stages at entry (73-76).

The technical case for continuing to raise turbine entry temperature is that this increases the thermal efficiency of the engine (which improves S.F.C.) and at the same time increases the specific power output (i.e. power per unit weight).

The above has obviated the fact that Rolls Royce engineers and designers can no longer achieve a better engineered engine of technical excellence, economically, without having to rely on the assistance of the manufacturing organisation to seek vastly improved methods of manufacture. These improved manufacturing methods are to be capable of processing the high temperature resistance-blade materials as well as producing blades of very complicated self air cooling design (74).

Bade cooling posses problems in that the first stage of turbine (known as MPI stage) usually consists of the smallest bales, yet it is these blades which are subject to the most intense heat from the combustion chamber and therefore require the greatest degree of cooling ; in order to cary away the heat, the maximum amount ofair possible must be forced through the cooling passages which must therefore have the maximum cross sectional area.

In order to meet such requirements, advances in two major areas have taken place; the forging of hollow turbine blades and castings of multi-shrouded baldes. In the case of forgings, in order to guarantee a unifrom passes thicknesses with maximum accuracy , the production of the blade involves several stages of forging, mechnical drilling , subsequent hot coinig and final machining (76).

The mehtod have allowed high temperature resistance materials to be used which give economic service life and allow somehow 50 DEG. C increase of turbine entry.

As the need for high turbine temperature increases , cooling arrangements became more complex and consequently designers began to turn increasingly to the casting of baldes, where workability is not required and where there is wider freedom of action in the introduction of the cooling arrangemets (75).

Because of the very efficient cooling achieved , blade temperature was reduced despite increased turbine inlet temperature (74).

This process, however, has certain disadvantages as it results in blades of short service life. Therefore efforts are now being devoted to investigating ways of extending the life of casting alloy.

As a result of the above development , although component manfacturing costs are increased as a result of the deployment of very sophisticated tooling, the overall value of the engine has increased since the resulted increase in power has greatly offset the increase in manufacturing cost resulting in a better £/lb thrust.

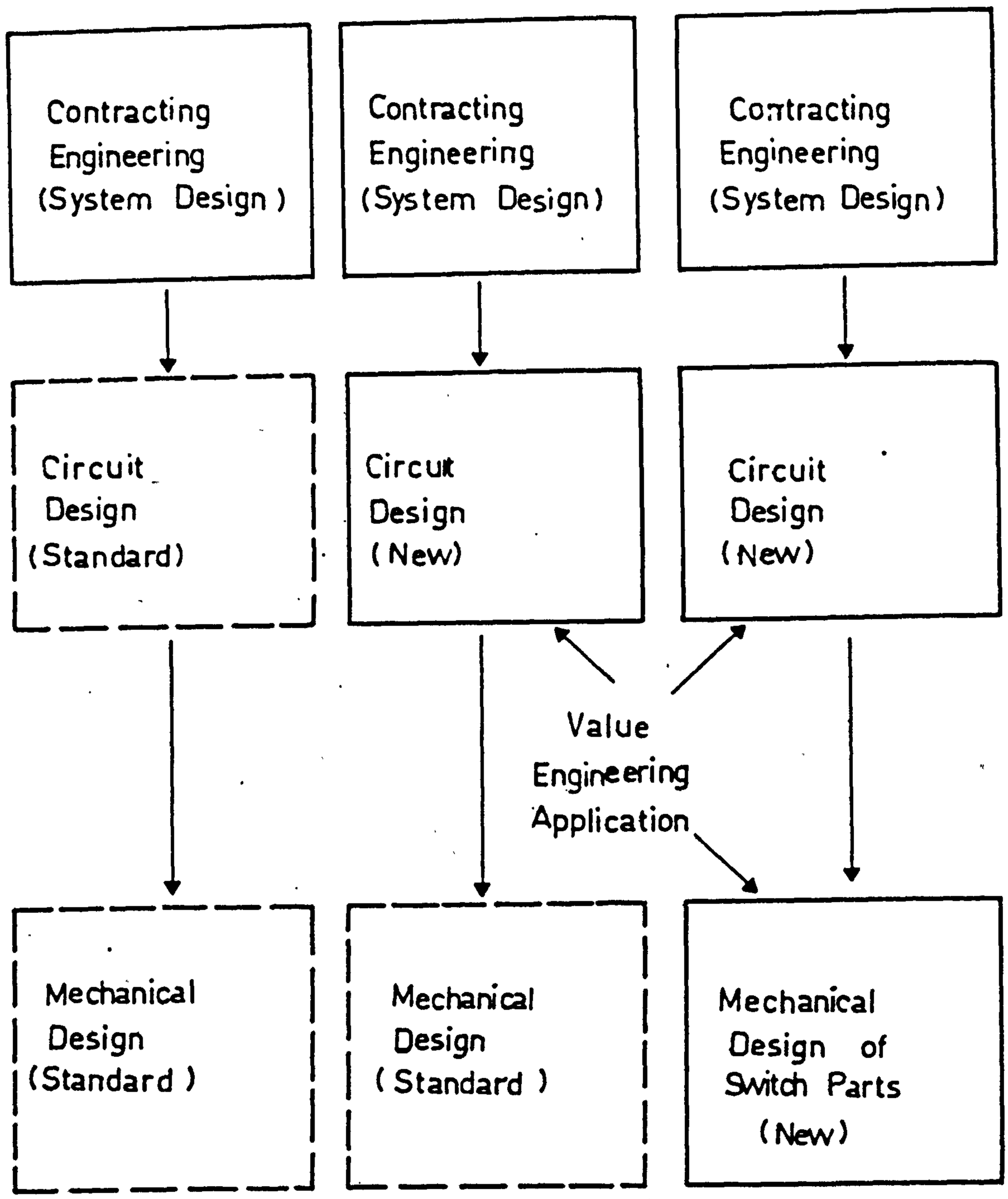

FIG.(4·1) DESIGN PROCEDURE - TELEPHONE EXCHANGE SYSTEM

PLESSEY TELECOMMUNICATIONS .

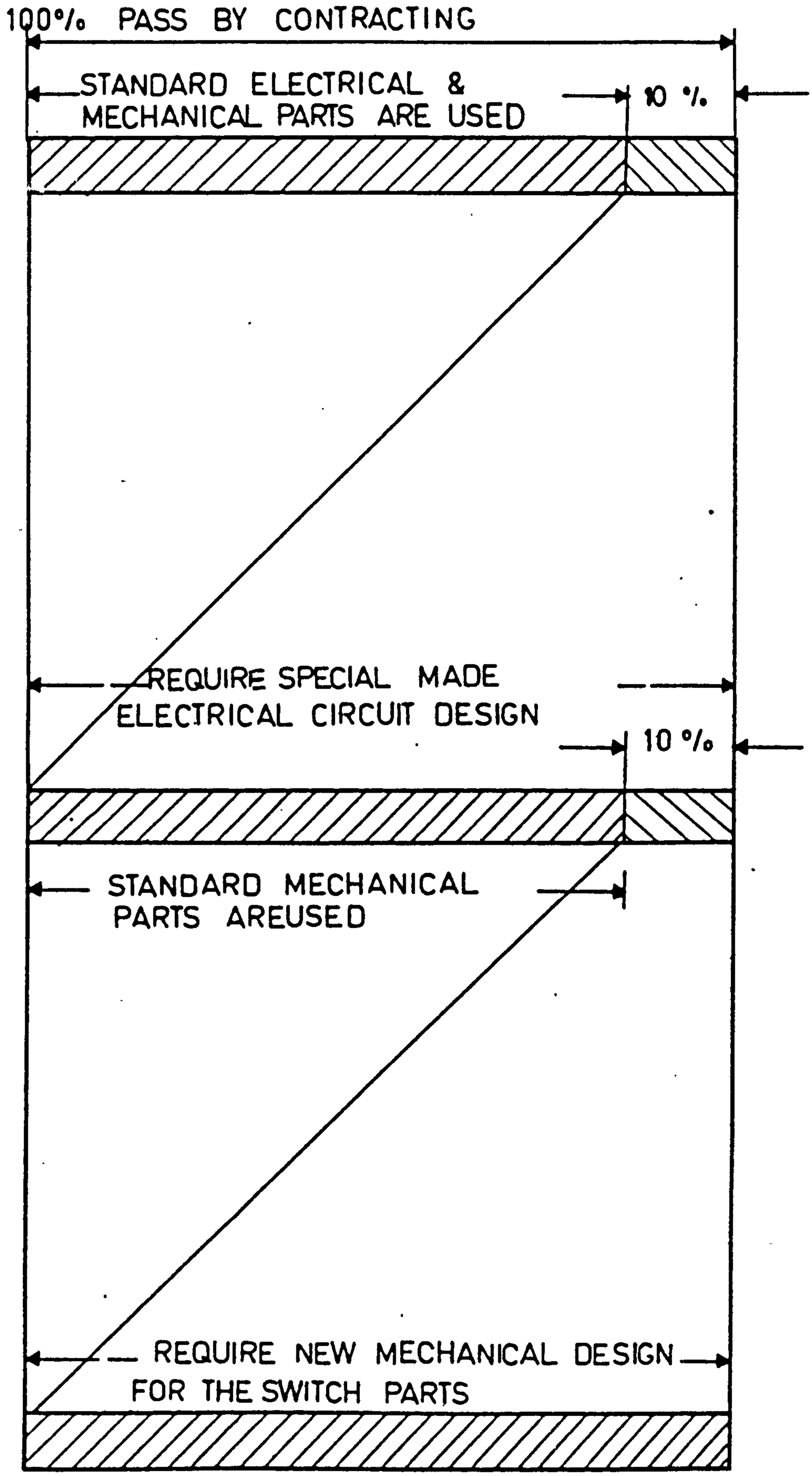

FIG.(4·2) BREAK DOWN TO THE TYPE OF ORDERS

RECEIVED AND PROCESSED BY PLESSEY-TELECOM.

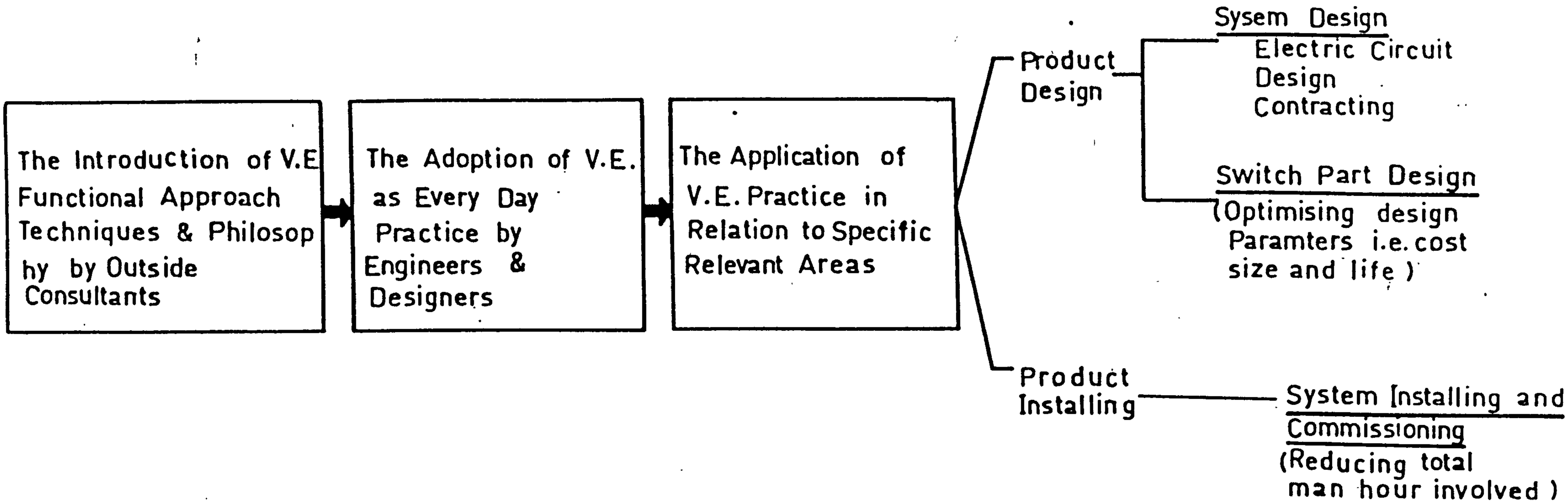

FIG.(4.3) VALUE ENGINEERING APPLICATION IN PLESSEY TELECOM.

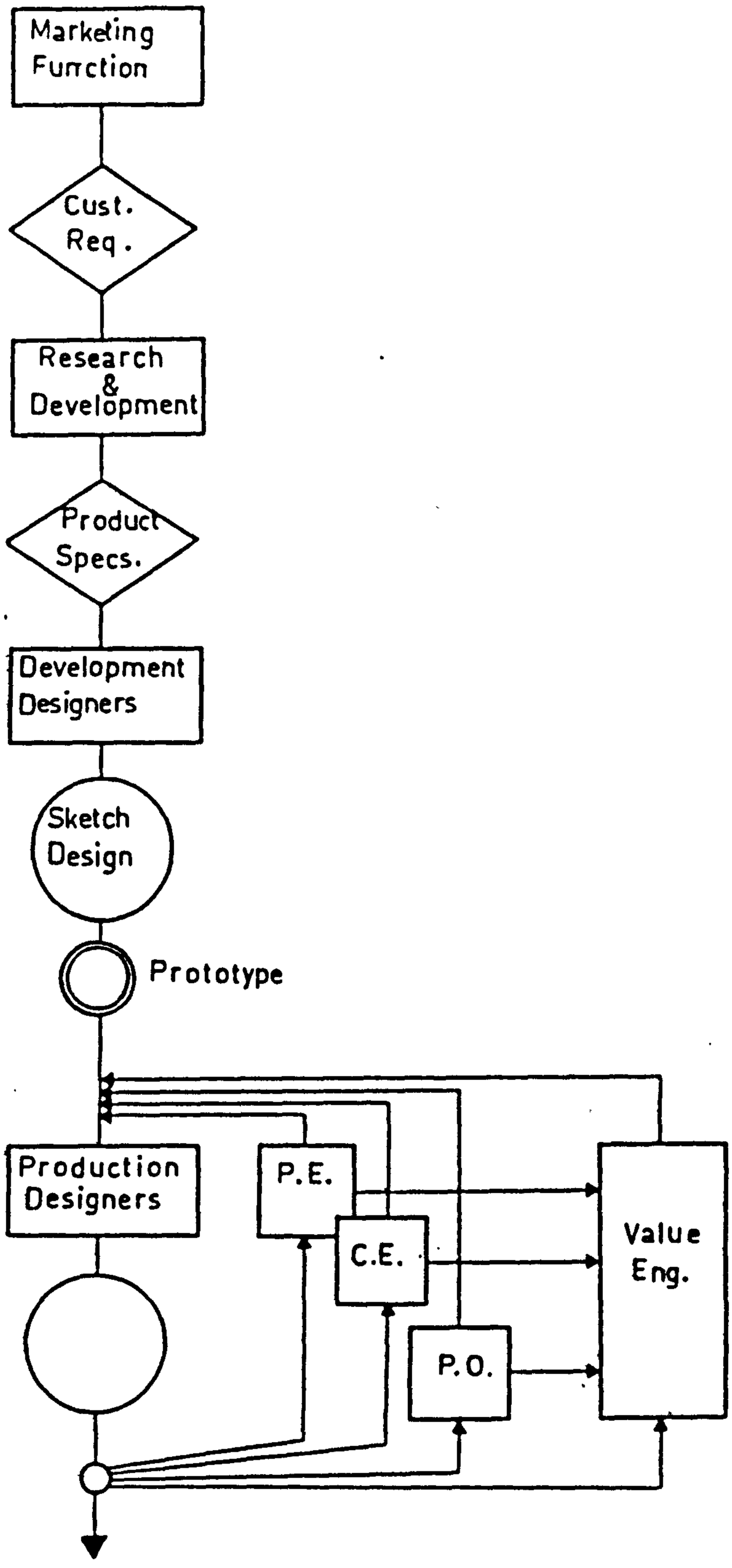

FIG.(4:4) THE INVOLVEMENT OF THE ORGANISATION FUNCTIONS DURING THE DESIGN STAGES OF DOMESTIC APPLIANCES PRODUCTS_HOOVER LTD. MERTHYR TYDFIL .

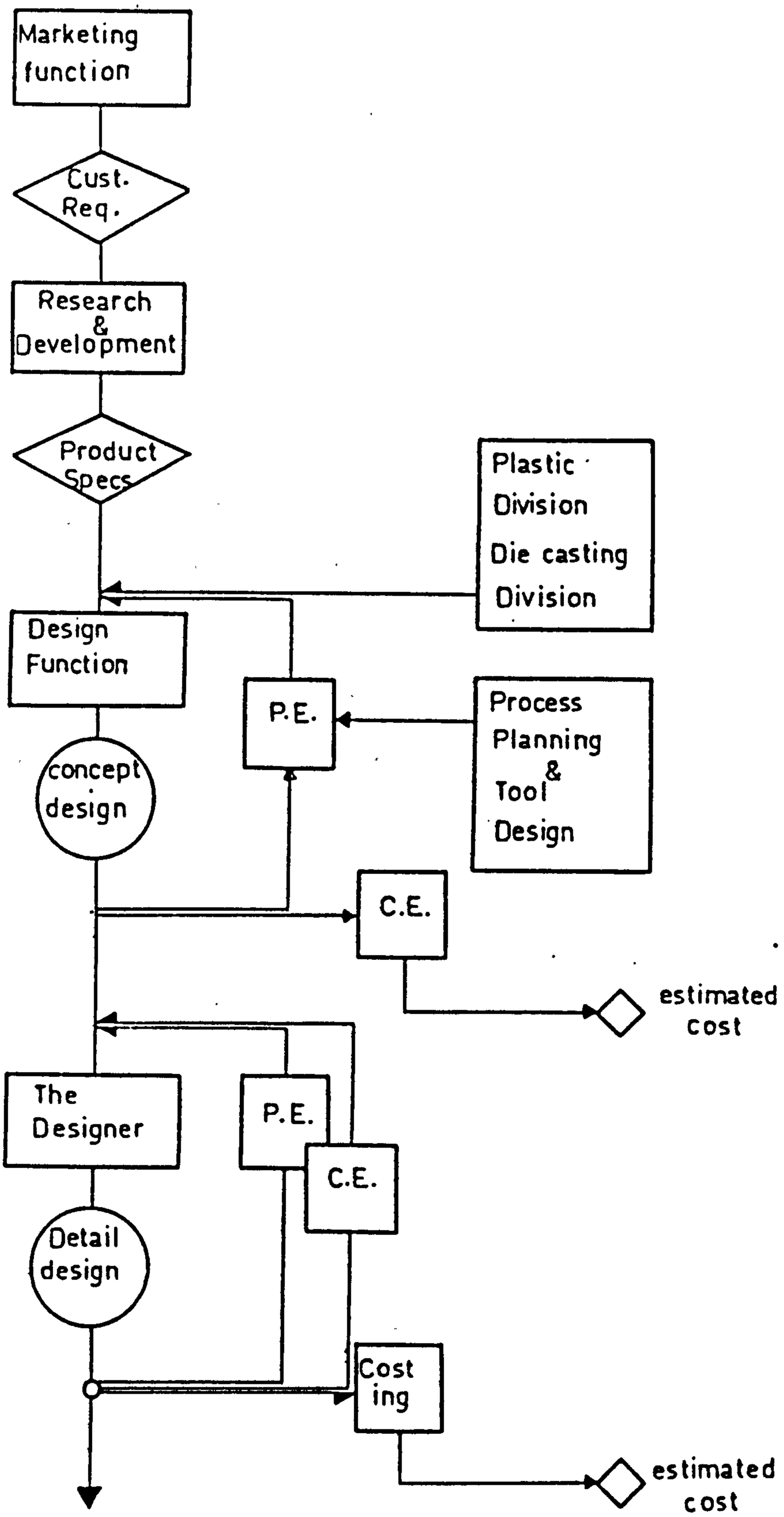

FIG.(4·5) THE INVOLMENT OF THE ORGANISATION FUNCTIONS DURING THE DESIGN OF CAR ACCESSORES PRODUCTS JOSEPH LUCAS (ELECTRICAL) LTD. - BIRMINGHAM .

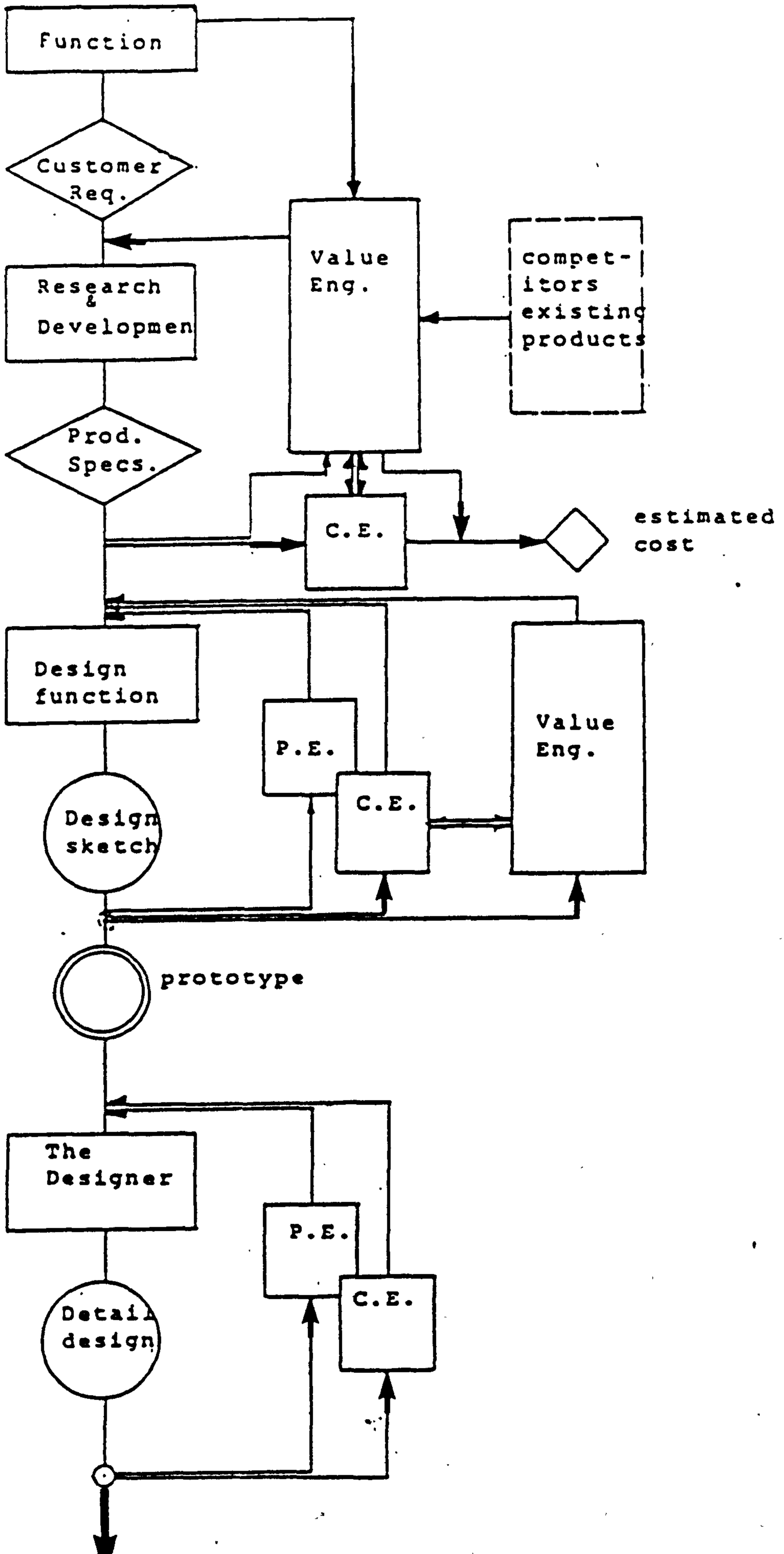

FIG.(4·6) THE INVOLVEMENT OF THE ORGANISATION FUNCTIONS_ DESIGN STAGES OF CHEMICAL ANALYSIS INSTRUMENTS PYE_UNICAM CAMBRIDGE .

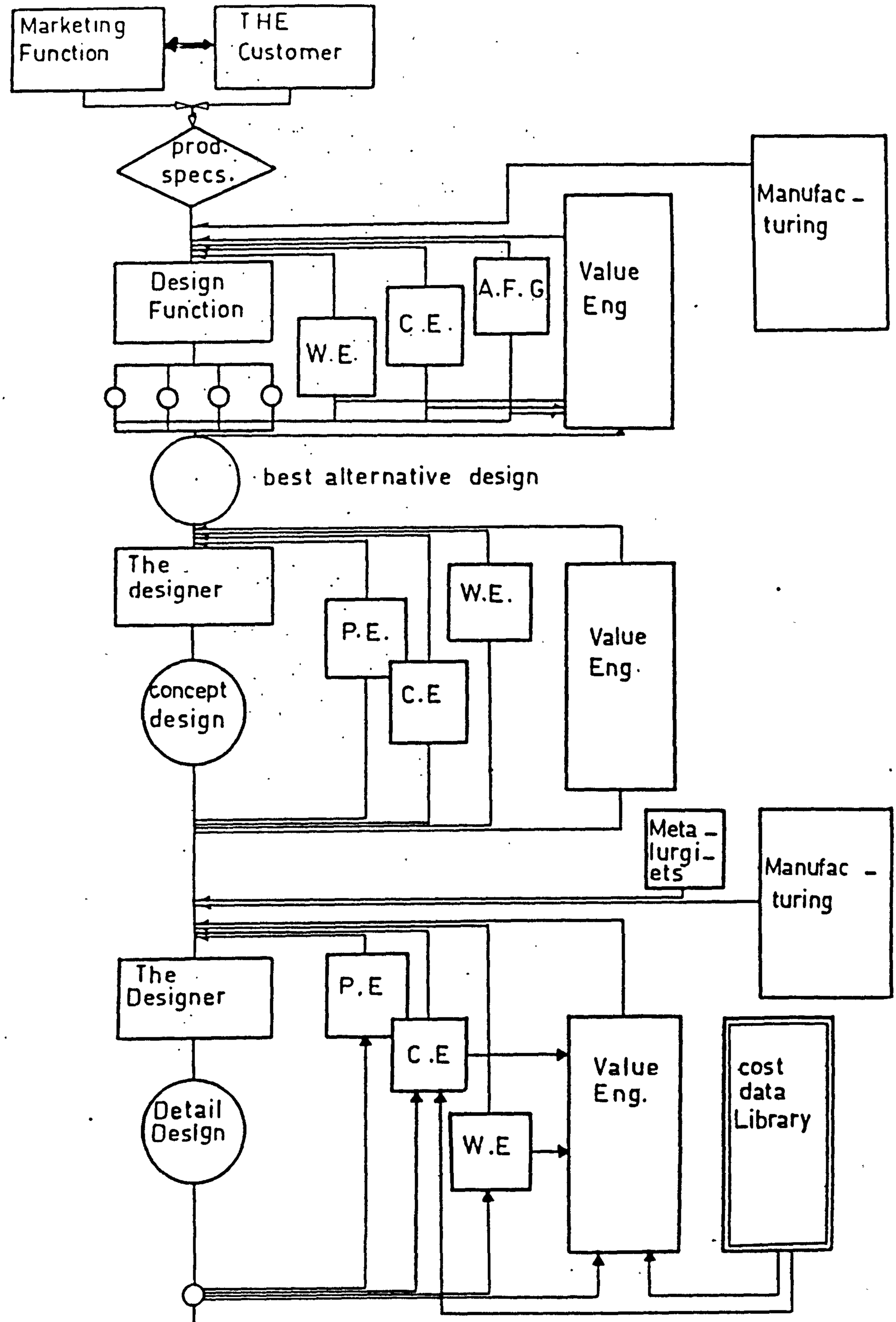

FIG.(4·7) THE INUOLVEMENT OF THE ORGANISATION FUNCTIONS DURING THE DESIGN STAGES OF AEROENGINES - ROLLS ROYCE, DERBY .

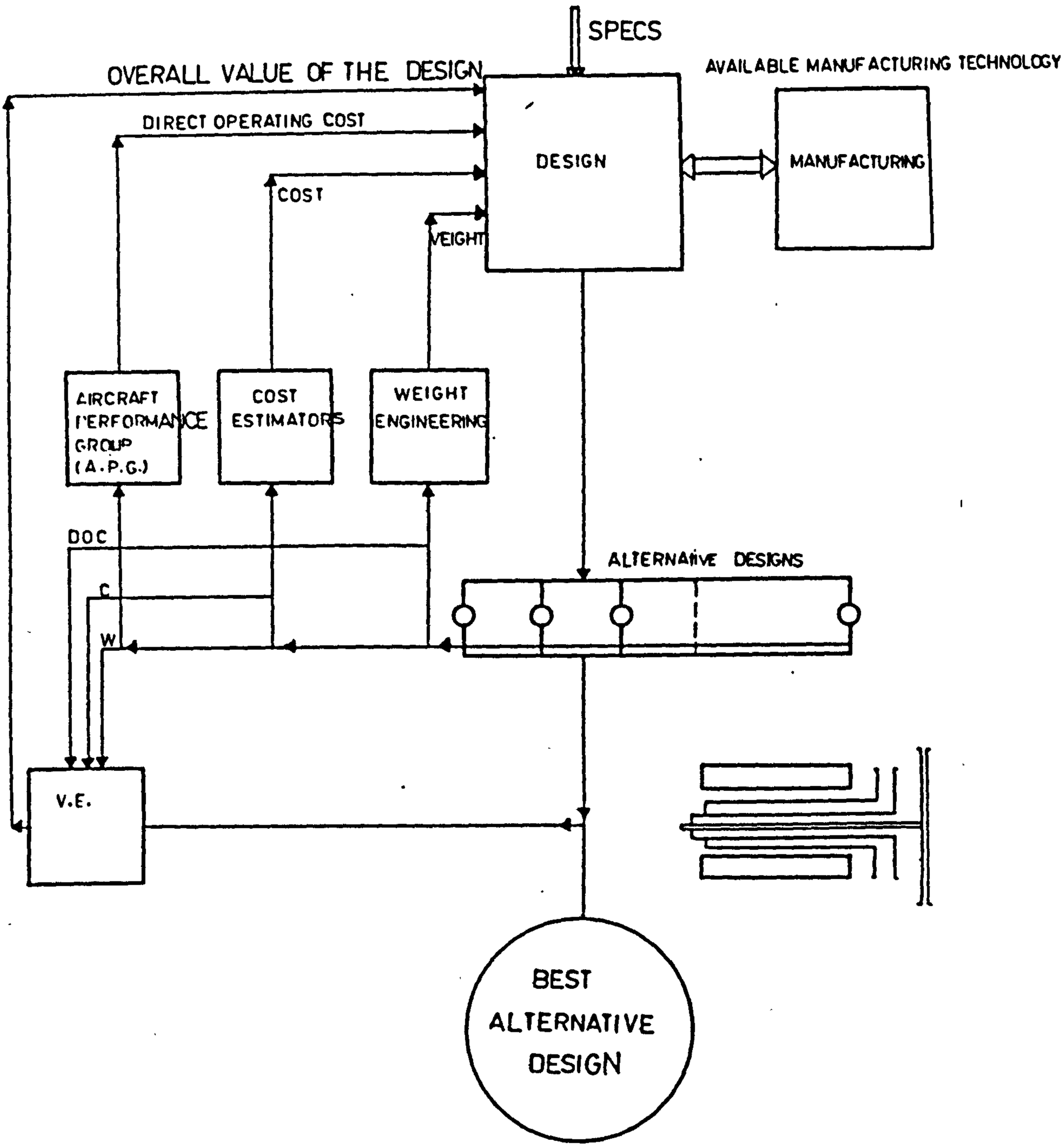

FIG. (4.8) PRELIMINARY DESIGN STAGE OF ENGINE DESIGN _ ROLLS ROYCE, DERBY.

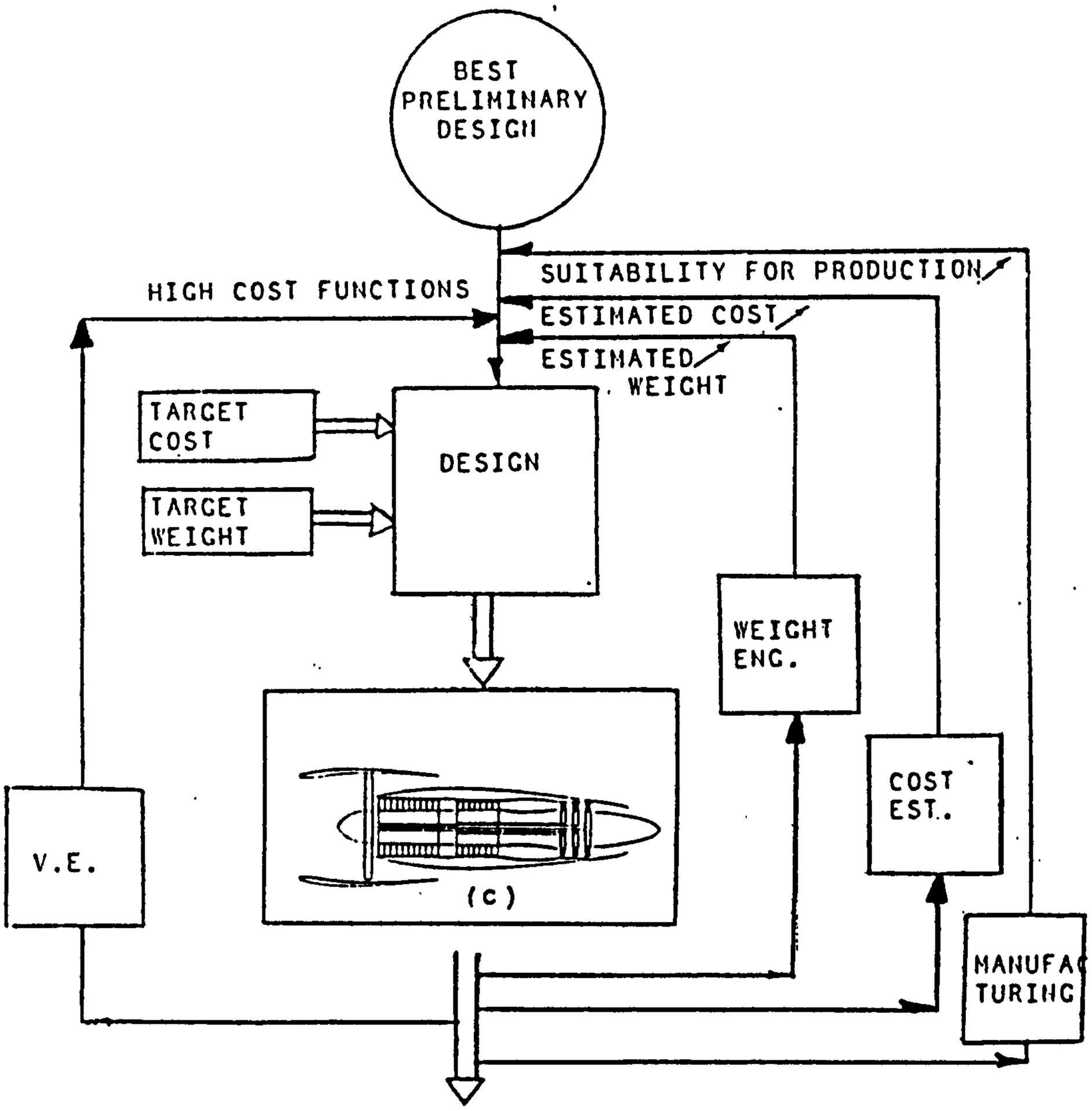

ENGINE MAIN FUNCTIONAL ARRANGEMENTS (CONCEPT DESIGN)

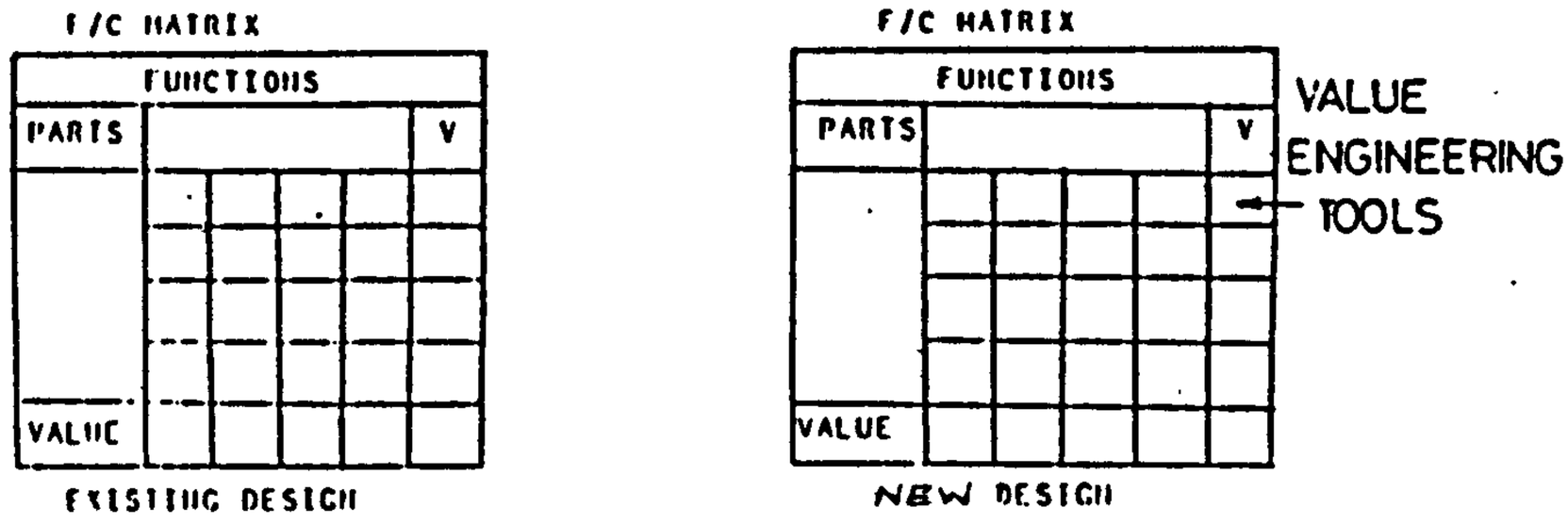

FIG.(4·9) CONCEPT (BASIC) DESIGN STAGE OF AEROENGINE

ROLLS ROYCE - DERBY .

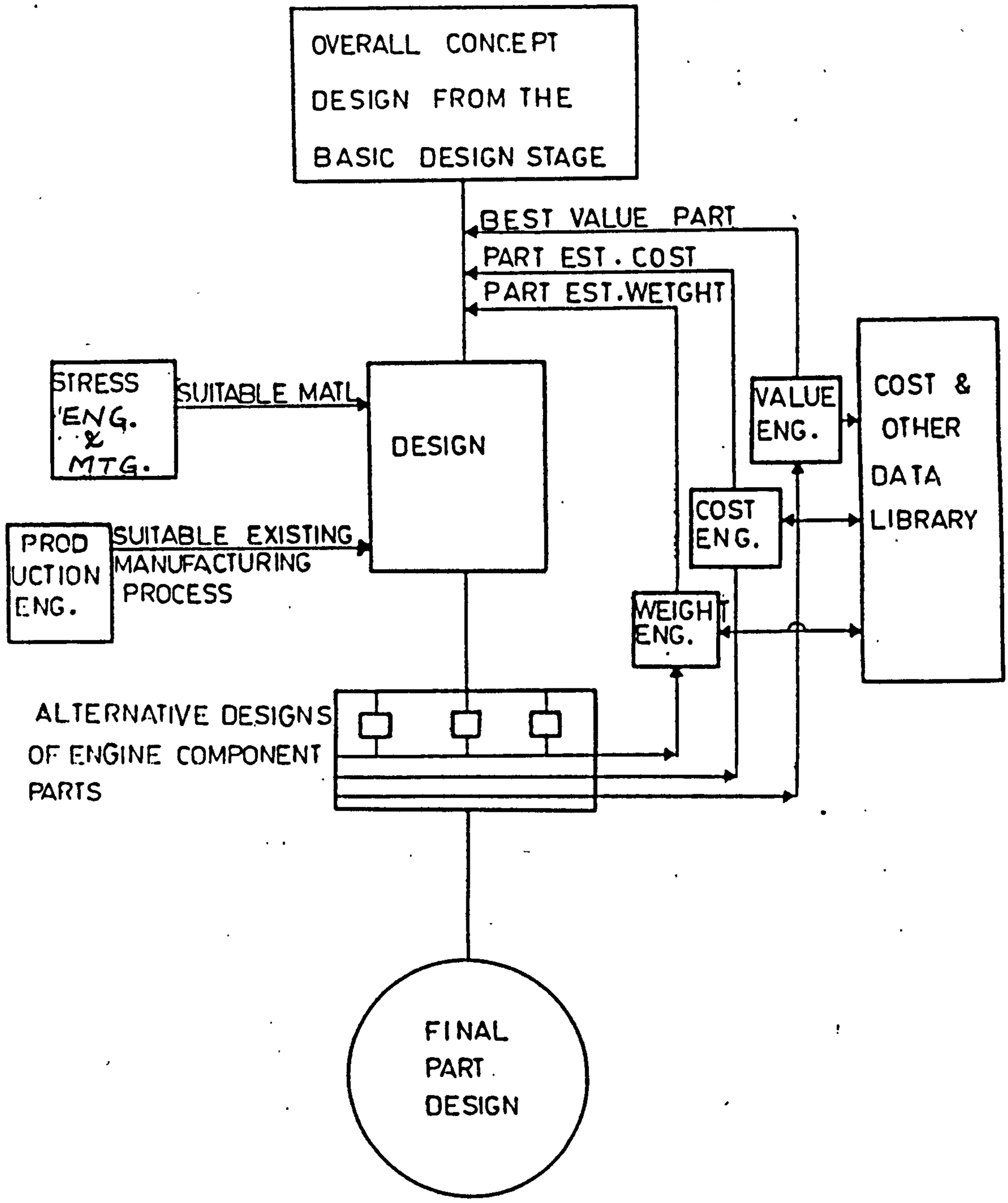

FIG.(4·10) MAIN DESING STAGE (DETAILING) OF AEROENGINE - ROLLS ROYCE DERBY .

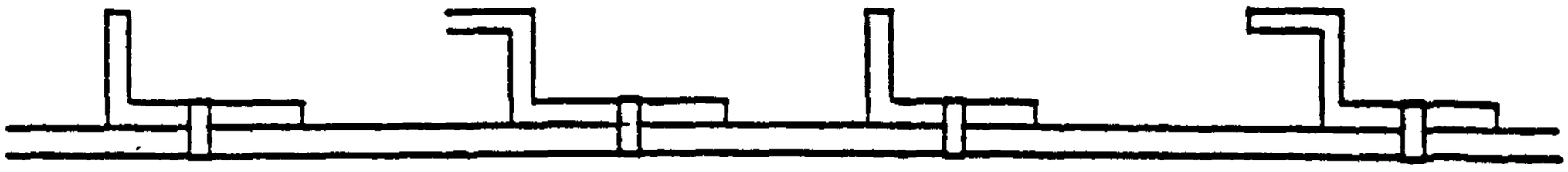

FIG (4.11a)RIVETED BEAMS

FIG (4.11b) MACHINED FROM SOLID

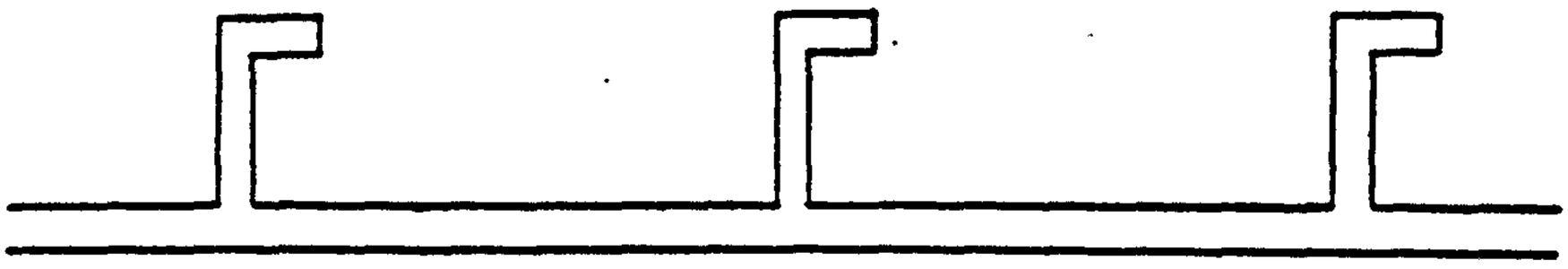

FIG (4.11c) MACHINED FROM SOLID

FIG.(4.11) THE DEVELOPMENT OF THE DESIGN OF THE AEROPLANE SKIN PANELS

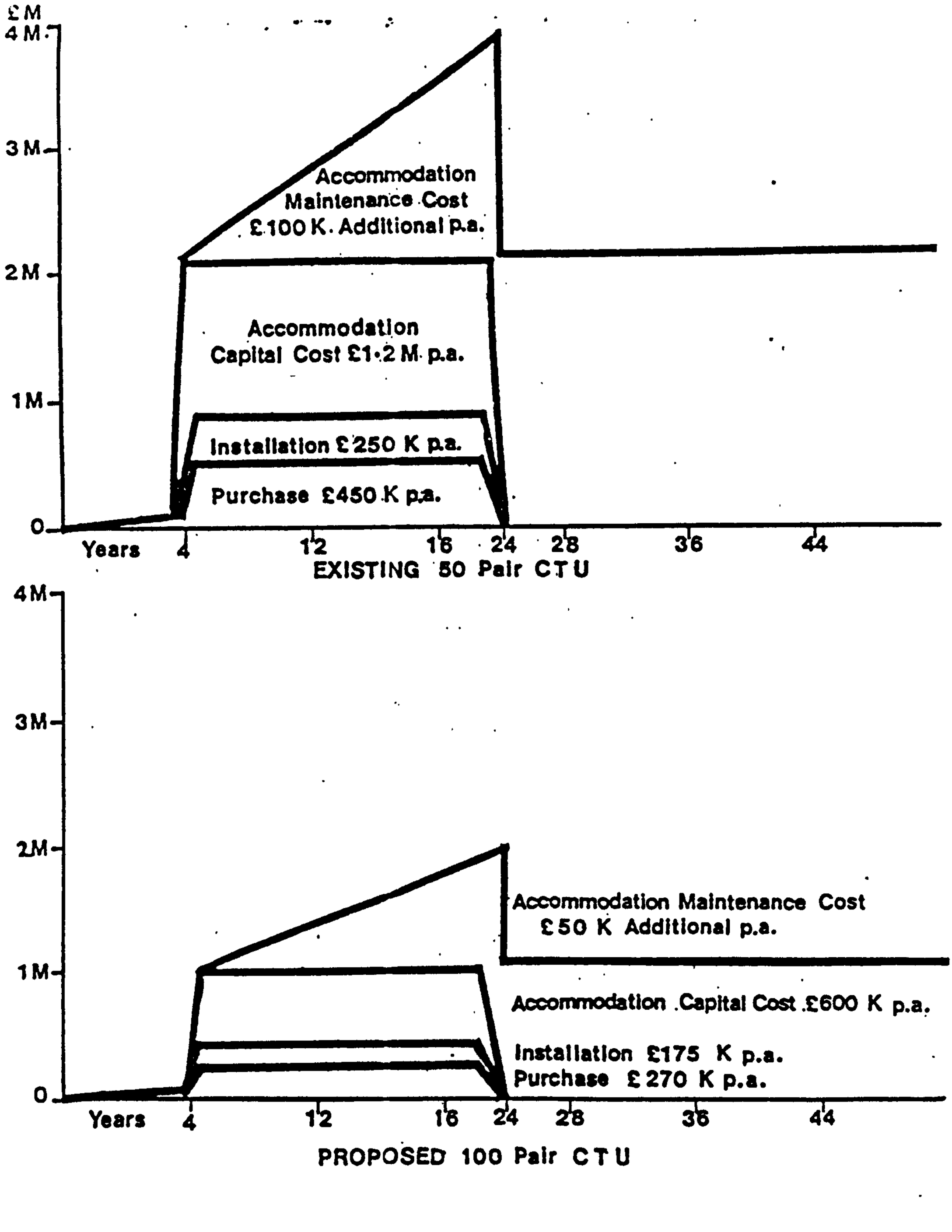

FIG.(4·12) TYPICAL OVERALL LIFE CYCLE COSTS OF TELEPHING EXCHANGE UNIT OVER 20 YEARS - FROM REF (70).

FIGURE 4.13 ANALYSIS OF OVERALL ACTIVITY RELATED TO THE DESIGN AND MANUFACTURE OF AERO-ENGINES ROLLS ROYCE

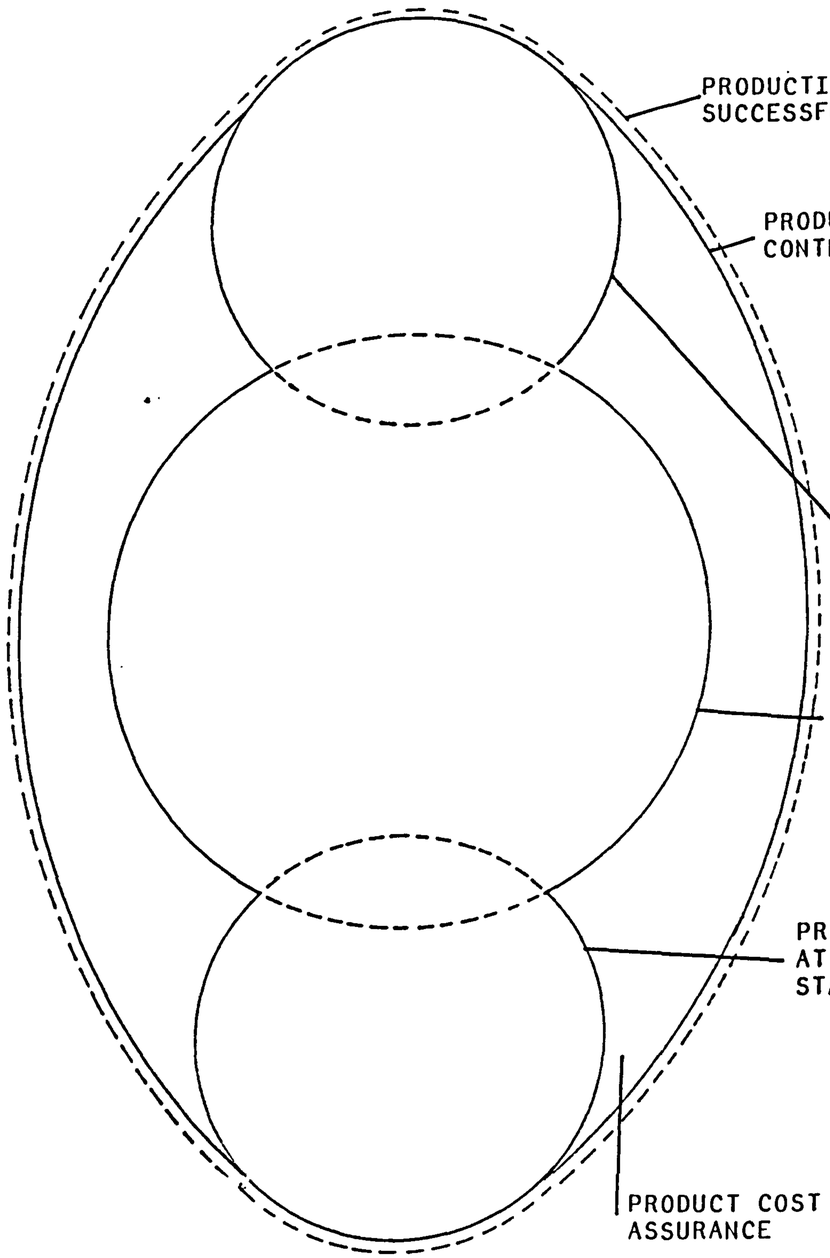

	OBJECTIVES AND SCOPE	PROCEDURES AND TASKS
PRODUCTION OF COMMERCIALLY SUCCESSFUL ENGINE	Basic quality objective of 'RR' 'To provide a product that meets the specified requirements of the customer and air worthiness authorities in respect of safety performance, reliability and cost of operation, whilst still allowing the Derby group to be profitable'.	The implementation of a 'Total quality approach involving all functions from design, development and manufacturing through to product support in the field'.
PRODUCT COST CONTROL (PCC)	Supply products to specified requirements within the target cost set by the management.	All those personnel whose actions may directly affect product cost are made aware of their cost obligations, and their performance in carrying out those obligations are regularly monitored and reported.
PRODUCT COST TARGETTING	- To cause clear recognition of the fact that product cost is an important parameter in the marketing of a successful product. - To motivate and link together in active co-operation those individuals and departments whose responsibilities and actions must directly affect product cost.	This is arrived at through agreement between the project directors, function directors and senior line managers charged with the responsibility for achieving it. It is based on historical cost of existing engines, expected market selling price and the company acceptable level of profitability.
DESIGN COST CONTROL (DCC)	The ability of an engine defined by design to achieve the specified levels of performance, quality and reliability and in addition within the agreed target cost.	This process involves a continual appraisal and challenge of the design by designers in collaboration with engineers representatives in particular manufacturing, value engineering, industrial engineering, laboratories, purchase, detail and manufacturing cost estimating (MCE) to ensure the intended functions of their designs are achieved within the agreed target cost.
PRODUCT COST CONTROL AT THE MANUFACTURING STAGE	The ability of the manufaturing organisation to manufacture the standard of engine defined by engineering in terms of specified level of output and quality within the agreed target cost and delivery.	Initially during the design and development phases, manufacturing representatives will have been directly involved in the design and influencing designers to design for minimum manufacturing cost as part of 'DCC'. As the design details released for production the manufacturing organisation including material purchasing, planning, product centre managers endeavour to reduce their costs by the usual activities. When manufacturing are unable to achieve their target costs during actual manufacture, they must take action to investigate their methods. Should it be impossible to alter these to recover cost overruns, alterations to the design are considered.
PRODUCT COST CONTROL ASSURANCE	To ensure product cost control objectives are met (i.e. target costs).	Overall supervising of the plans and performance of the product cost control tasks.

FIGURE 4.14 ANALYSIS OF MAJOR ACTIVITIES RELATED TO DESIGN COST CONTROL - AERO-ENGINES ROLLS ROYCE

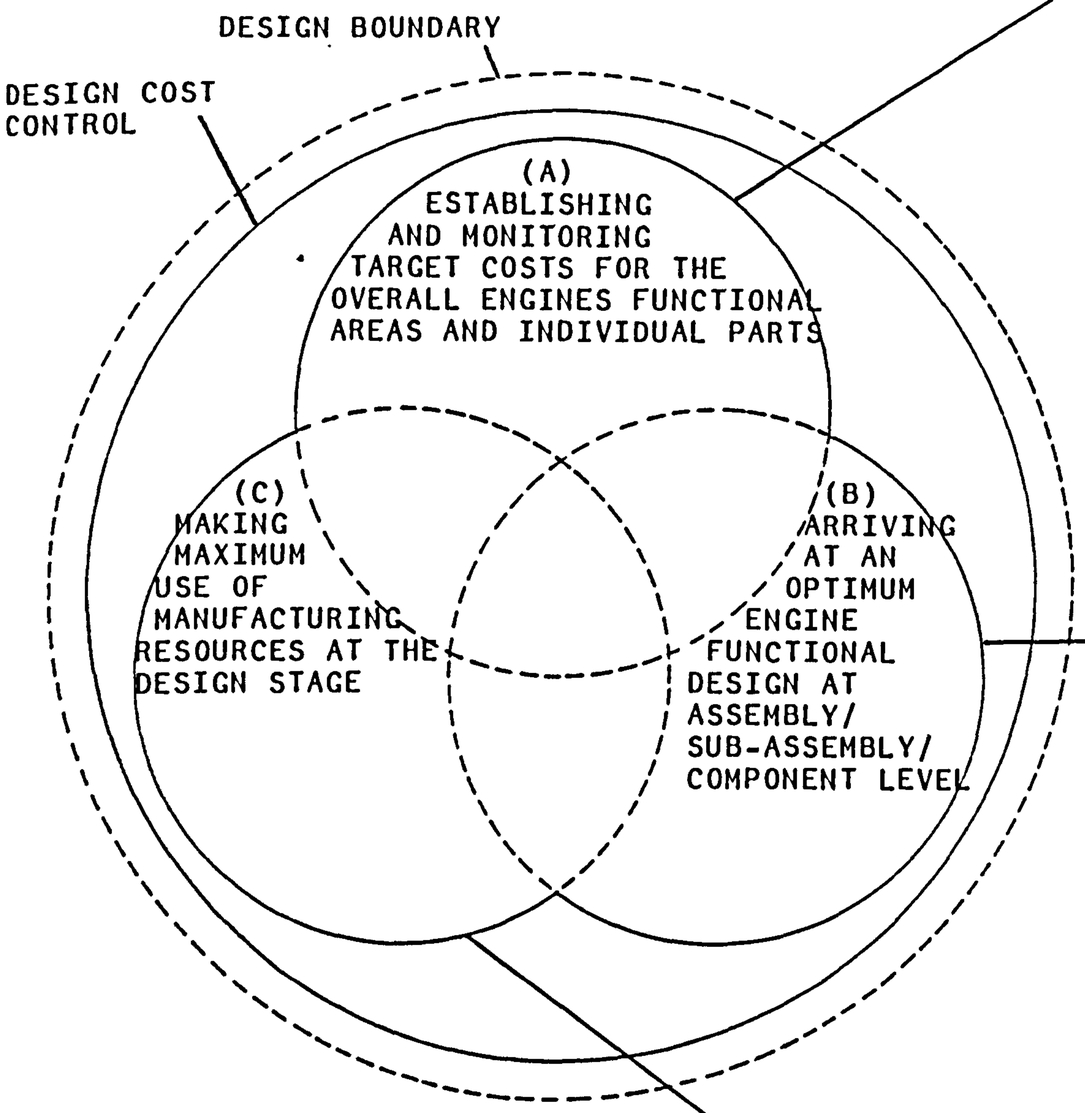

SCOPE

Taking into consideration that the immediate overall objective is to control the product cost at the design stage, this area of activity is associated with establishing the manufacturing cost targets which are to be met by the engineering and design function as well as monitoring the design manufacturing cost estimates to ensure that these targets are not exceeded.

ACTIONS, TASKS AND RESPONSIBILITIES

The allocation of the engine overall target cost is the management's responsibility. This is initially established at the product definition stage as a result of policy decision and is reviewed and modified once again at a later stage before the design is finalised. With the help of Value Engineers this overall target cost is proportioned and allocated first to major functional areas by comparison with the cost of providing the same functions in similar existing engines. These functional target costs are further proportioned and allocated to smaller packages and individual parts with the help of Cost Estimators, Product Centre Representatives and Purchasing Officers.

In order to meet target costs for the individual parts and consequently for the overall engine, the engine manufacturing costs, with the help of specialists, are being continuously estimated at each stage of the design and compared with the management target cost. As the design progresses, any changes which may adversely affect the cost are highlighted and reported to the Chief Designer for action to be taken. In order to correct the cost, new design proposals are generated either to introduce new and simpler functional design or to allow a more economical method of manufacture to be used.

SCOPE

This area of activity is associated with achieving a sound and optimum engine functional design at the assembly/sub-assembly/component level to ensure that the engine final design is the minimum necessary to meet the established functions and can be produced within the management target cost.

ACTIONS, TASKS AND RESPONSIBILITIES

This is achieved at all design stages by continuously establishing and defining the primary and necessary functions to be provided by each sub-assembly/component and challenging the design details against these defined functions.

Optimising the engine overall functional design (i.e. at assembly level) is achieved at an early stage of the design by generating and evaluating as maximum as possible design schemes, with the help of manufacturing and other specialists. At this stage, the major functional arrangement of the engine such as number of compressor stages, number of shafts, combustion chambers, etc., are optimised to allow the overall specifications in terms of thrust, S.F.C. and D.O.C. to be met within the management target cost.

At a later stage, the design of individual packages/sub-assemblies is subjected to additional challenge by the Designer and the Value Engineers, through the application of design functional analysis and functional cost analysis, basically to highlight high cost functional areas. These areas are subjected to design changes through the generation and the evaluation of several alternative design schemes and so on until the target cost is met.

At the component design stage, the component functional design is optimised within the capability and the requirements of the selected manufacturing process. At this particular stage of design a compromise between the design requirements and the manufacturing requirements has to be achieved and for this full co-operation between the Designer, Value Engineer, Production Liaison Engineer and Product Centre Managers has to take place.

SCOPE

This area of activity is associated with taking the necessary actions to ensure that the engine final design will allow maximum utilisation of available manufacturing resources in terms of processes, capital, skills, etc., as a means to meet the design functions and requirements at minimum possible cost within the management allocated target cost.

ACTIONS, TASKS AND RESPONSIBILITIES

This is achieved by making available to the Design Team all the relevant facts related to the capabilities and the requirements of the manufacturing strategies and their associated costs. At the engine preliminary stage, this increases the chances of arriving at an optimum functional design. At the main design stage (component level), the selection of an optimum manufacturing method will directly affect the cost of manufacturing. At this stage any new manufacturing requirements introduced by a design, which cannot be met from current production resources, or their planned improvement, are highlighted by the Production Liaison Engineer and reported to the Chief Production Engineer. If the effect on the cost is significant, it is then reported by the Cost Estimator to the Chief Designer and as a result an alternative economic design has to be introduced which would not allow the introduction of this new manufacturing requirement.

CHAPTER (5)

ANALYSIS OF RESULTS OF INITIAL INVESTIGATION AND PRELIMINARY CONCLUSION

5.1 IDENTIFICATION AND ANALYSIS OF TASKS OF THE ENGINEERING ORGANISATION

It has already been established from chapter (2), that the ultimate objective of any business is to achieve certain minimum return on capital invested. For an engineering organisation this can only be achieved by developing, producing and marketing of products which would satisfy a pre established market requirements and which would generate certain profit when sold at the market selling price.
From the industrial survey, one can now assume that the above will involve the engineering organisation in several major tasks the achievement of which is necessary to enable the organisation achieving its overall objectives.For instance, one of these tasks would be achieving certain minimum target sales which would cover the development and tooling costs as well as other fixed overheads.More important ,however,the organisation should be able to produce a commercially successfull products, i.e. a product that would satisfy the preestablished market need at the right level of quality and performance and when sold at the market price it yields certain minimum profit.
The above task inturn would necessitate the establishing of a clear and precise definition of market requirements through the efficient market research.Having defined the market requirements, the organisation management would be faced with the major task of " enabling the product to be manufactured at the lowest possible cost, whilst maintaining its essential function performance characteristics . This represent the activity area with which the present investigation is concerned.Fig.(5-1)analyse the key objectives and major tasks of the engineering organisation , as outlined above .
This major task inturn would involve the engineering organisation in other tasks which is directly related to product manufacture and design .This is discussed in the following clauses.

5.1.1 ANALYSIS OF ACTIVITIES OF THE ENGINEERING ORGANISATION

In order to define and analyse the major areas of activities within which the engineering organisation would be involved to achieve the defined task, the product requirements and characteristics are first reviewed.

DEFINITION OF PRODUCT CHARACTERISTICS & REQUIREMENTS

Fig(5.2) reviews the functional and economical requirements and characteristics of the engineering product.

The industrial survey have shown that these requirements varry from one product to another. The important elements of the product functional requirements neverthless are the same. These are the performance, the reliability as well as the total life cycle cost. The later inturn will include operating cost, service & maintenance cost as well as replacement cost. The product initial cost, i.e. selling price, and delivery represent the main economical requirements of the product.

The major task of the engineering organisation as discussed in the previous clause would be to enable the final product to be produced in the best possible manner which would allow all product requirements to be satisfied,at the minimum possible cost.

This inturn would involve the engineering organisation in two major activities as follows:

(A) Arriving at the most economic way with which to manufacture and according to design products to meet the product requirements.

(B) Controlling the product manufacturing costs ,within a pre determined limits.

These are discussed further.

(A) ARRIVING AT THE MOST ECONOMIC WAY TO MANUFACTURE AND DESIGN THE PRODUCT

Meeting the product functional requirements in terms of reliability strength , corrosion resistence, integrity, weight ..etc.would depend to a large extent on the materials and manufacturing methods employed. In certain design cases the product requirements impose certain materials and methods, such as the case in aeroengine and aircraft industry. However, making full use of these process and materials will very much depend on the component design. A bad

detail design of the component will preclude the employment of a compatible process or result in producing parts of impaired quality.

On the other hand the product functional concept design also have a major influence on the manner with which the product meets the predetermined specifications and market needs. This concept design however still can be influenced by the capability of the manufacturing process and the suitability of existing materials to meet the design requirements.The engineering organisation therefore will forever be confronted with the non-ending task of arriving at the most economic materials and methods to meet product requirements , or growing requirements, as well as developing the right concept and detail design to make full use of these methods .

(B) <u>CONTROLLING THE PRODUCT MANUFACTURING COST</u>

Although the product manufacturing costs can be influenced by the way with which the product is designed and manufactured, these costs can also be influenced by decision which is not related to either the materials selected or the employed methods. PYE Unicam, Rolls Royce and British Aircraft products are typical examples of industries where excessive costs can unnecessarilly be committed during product development and design.

In order to meet competition prices,in addition to deciding on optimum materials methods and design concepts , a means of product cost control must be effected to ensure that manufacturing costs are kept within certain acceptable limits which would enable the product to be competitive.

In outlining the boundry of the above tasks of the organisation one can conclude that there would be some overlap between the two tasks. Fig(5.3).

The degree of this overlap will depend on the particular product requirements and the complexity of the engineering activity . In industries of relatively simple activities such as domestic appliances and car accessories there will be a considerable overlap between the two tasks. In other industries, i.e. of complex activities such as aeroengine and aerospace industries, the overlap is reduced.

5.1.2 ANALYSIS AND DEFINITION OF THE DESIGNER TASK

The designer task would be part of the greater task of the engineering organisation. Fig(5.4) shows the relationship between the various tasks of the organisation and the designer .
The designer overall task is to achieve an optimum product design , i.e. a design which would meet the pre-established specification , of function and performance, reliably and can be produced at minimum possible costs within acceptable limit.In order to achieve this task the designer would be faced with two related by distinguishable tasks. These are optimising the design from the manufacturing point of view, and optimising the design from the cost point of view.
The component design has to be capable of being manufactured using conventional and economical methods and materials in order to ensure economy of manufacture, productibility of the component parts and quality of produced parts. In addition the designer has to develope a functional concept design which would enable the final total cost of the product to be kept within the acceptable limit, i.e. to control the cost at the design stage . In so doing the greater part of the designer task will be to ensure that the compelexity of product concept design is kept to the minimum required to meet the preestablished specification.

5.2 ANALYSIS OF ORGANISATION ACTIVITIES IN RELATION TO DESIGN FOR ECONOMIC MANUFACTURE -MANAGEMENT APPROACH :

In achieving the foregoing tasks , the engineering organisation management have adopted several approaches. The two most common are:

(1) The liaison between the design and the manufacture .

(2) The adoption of value engineering philosophy and practice.

1) THE LIAISON BETWEEN DESIGN AND MANUFACTURE :

The industrial survey have shown that it is a common practice to bring together personnel from the design side and the manufacture side to agree together on the best possible solution to any design and manufacture problem. At the design stage the liaison between the production and design sides is represented by the involvement

of a production engineer and cost estimator with the designer during the various stage of design . Fig.(5.5) schematically represents the interface between the design function and manufacturing function at the design stage.
This particular approach seems to have temporarily helped the organisation in solving their basic task, i.e. arriving at the most economic way to manufacture and accordingly design the product to meet preestablished requirements.

2) THE ADOPTION OF VALUE ENGINEERING PHILOSOPHY & PRACTICE :
The industrial survey have shown that , the value engineering philosophy has been applied to many areas other than product manufacture and design ,Fig(5.6). In relation to product manufacture the most common application of value engineering philosophy is at the production stage.
At this stage value engineering is used as a rational means to product cost reduction Fig(5.8) . In relation to product design value engineering philosophy has been used in several areas , but mostly related to design cost control .Fig(5.7).
In certain industries , the application of value engineering philosophy in relation to product design was mostly helped by the involvement of the value engineer with the designer at the various stages of product design, fig(5.9).
In general , one can conclude that value engineering was used as a means to product cost control . In most cases, however, the value engineering activity overlap with the liaison of design and manufacture activity.

5.3 THE NEED FOR MORE RATIONAL APPRACH TO A GROWING NEED TO REDUCE PRODUCT MANUFACTURING COSTS

It has been concluded from the industrial survey that except for certain industries such as Rolls Royce,Ford and PYE Unicam the organisation managment have not seriously considered the manufacturing cost as an objective . For certain market requirements management in most industries had different objectives and consequently different policies towards product design and manufacture .
Baring in mind that the prime objective of the organisation is to

achieve a minimum return on capital invested , one can assume that there are two major factors which are emerging and continuously challenging the manufacturing industry and threatening the achievement of such an objective. These are the increasing pressure from the market on the product selling price and the increasing cost of manufacturing resources. As a result , the engineering organisation is increasingly faced with the greater task of effecting maximum utilisation of the available manufacturing resources so as to minimise the product cost and meet the pressure on the selling price. Fig(5.10)

In view of above it can be assumed that there is a growing need to establish more rational and efficient means with which to economise in the use of manufacturing resources to meet the growing product requirements and the selling price.

It is therefore timely that management seriously consider the cost as an objective and consequently influence the necessary progress to be made in all relevant areas in relation to product design and manufacture where the decisions made can be vital to the resulted manufacturing costs. One important area where management have to effect immediate pregress; is helping the designer getting it right-first-time.

5.4 THE ROLE OF DESIGN FOR ECONOMIC MANUFACTURE CONCEPT ;-

On the light of the preliminary investigation one can now assume the role of the concept of D.E.M. in relation to the growing need and its relationship to value engineering.

From the argument that developed within C.I.R.P. , one can assume that the design for economic manufacture concpet in ts present form is a rational means with which to arrive at the most economic way to manfacture and design the product . By referring to Fig.(5.3), this will help the management achieving part or its overall task. Ideally, the concept of design for economic manufacture in addition to its present objective should be developed to provide rational means to product cost control , thus utilising the current philosophy and practicies of value engineering. One important area which would be worthy of developing is helping the designer optimising his concept design . This is discussed further in following chapters.

FIG.5.1THE KEY OBJECTIVES AND TASKS OF THE ENGINEERING ORGANISATION.

BUSINESS SURVIVAL

ACHIEVING CERTAIN MINIMUM RETURN ON CAPITAL INVESTED

" DEVELOPING , PRODUCING AND MARKETING OF PRODUCTS WHICH WOULD SATISFY A PRE-ESTABLISHED MARKET REQUIREMENTS AND WHICH WOULD GENERATE CERTAIN PROFIT WHEN SOLD AT THE MARKET SELLING PRICE"

ACHIEVING CERTAIN TARGET SALES THROUGH THE EFFICIENT

PRODUCING A COMMERCIALLY SUCCESSFUL PRODUCT

ON THE BASIS OF THE THE ESTABLISHED REQUIREMENTS

"ENABLING THE PRODUCT TO BE MANUFACTURED AT THE LOWEST POSSIBLE , COST , WHILST MAINTAINING ITS ESSENTIAL FUNCTIONAL PERFORMANCE CHARACTERISTICS"

ESTABLISH A PRECISE MARKET REQUIREMENTS (TECHNICAL AND ECONOMICAL) THROUGH EFFICIENT MARKETING RESEARCH

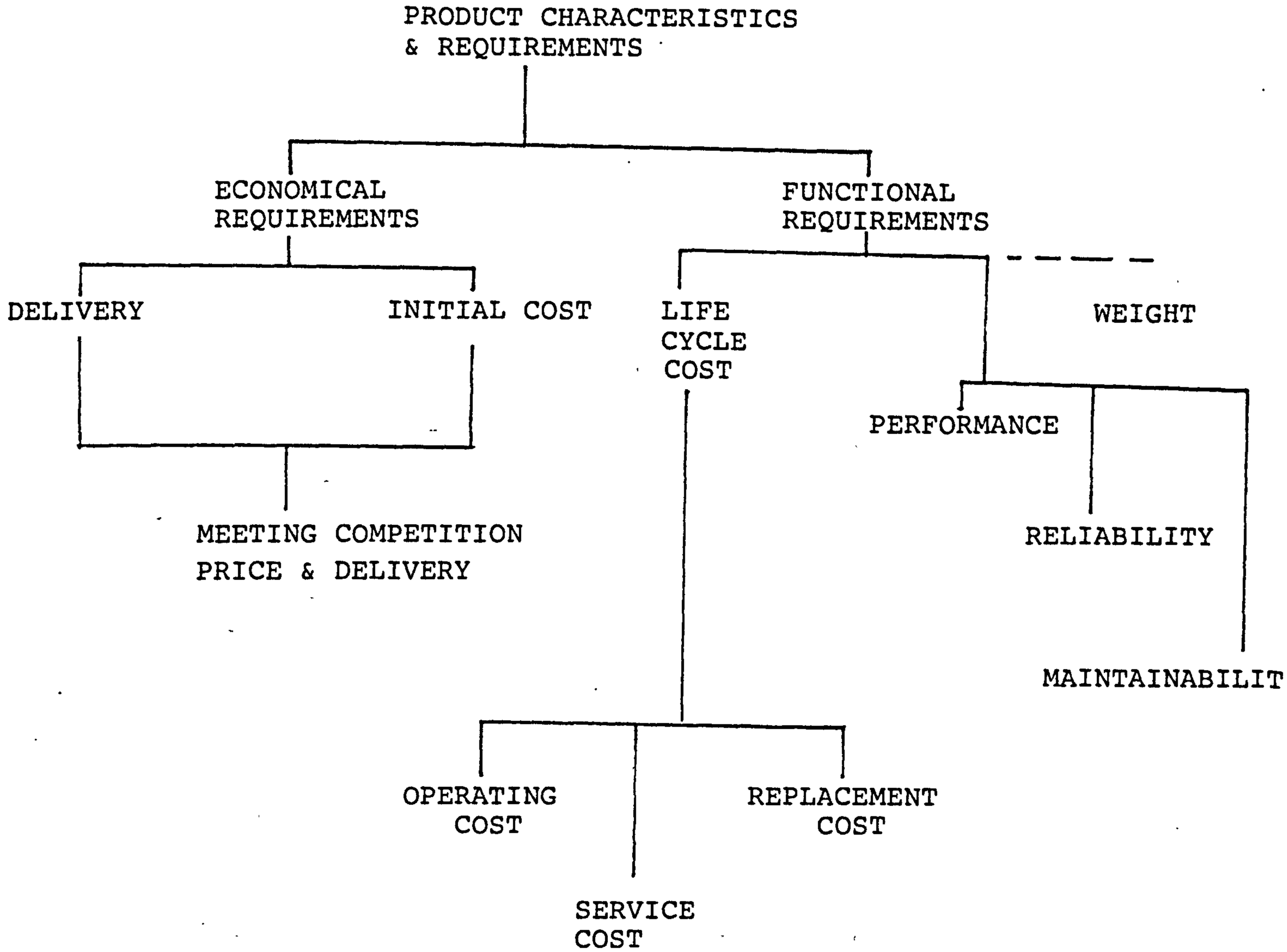

FIG.(5.2) FUNCTIONAL AND ECONOMICAL REQUIREMENTS OF THE PRODUCT

" ENABLING THE PRODUCT TO BE MANUFACTURED AT THE LOWEST POSSIBLE COST WHILST MAINTAINING ITS ESSENTIAL FUNCTION PERFORMANCE CHARACTERISTICS"

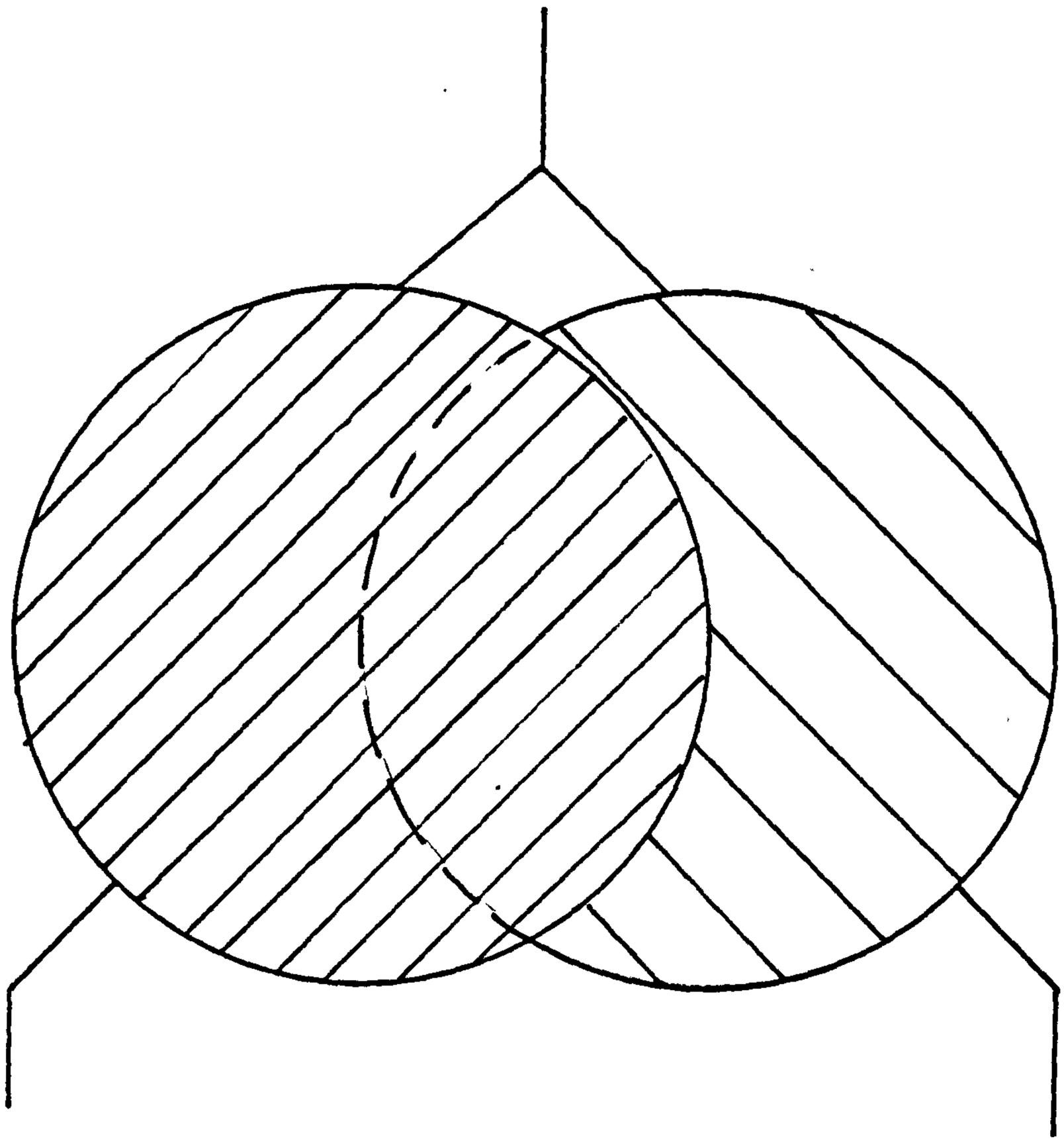

(BASIC TASK)

ARRIVING AT THE MOST ECONOMIC WAY WITH WHICH TO MANUFACTURE AND ACCORDINGLY TO DESIGN THE PRODUCT TO SATISFY PRE - ESTABLISHED REQUIREMENTS.

(ADDITIONAL-TASK)

CONTROLLING THE PRODUCT MANUFACTURING COST WITHIN ACCEPTABLE LIMITS.

(PRODUCT COST CONTROL)

FIG.(5.3) ANALYSIS OF MAJOR TASKS OF ENGINEERING ORGANISATION

PRODUCING AN OPTIMUM
PRODUCT DESIGN

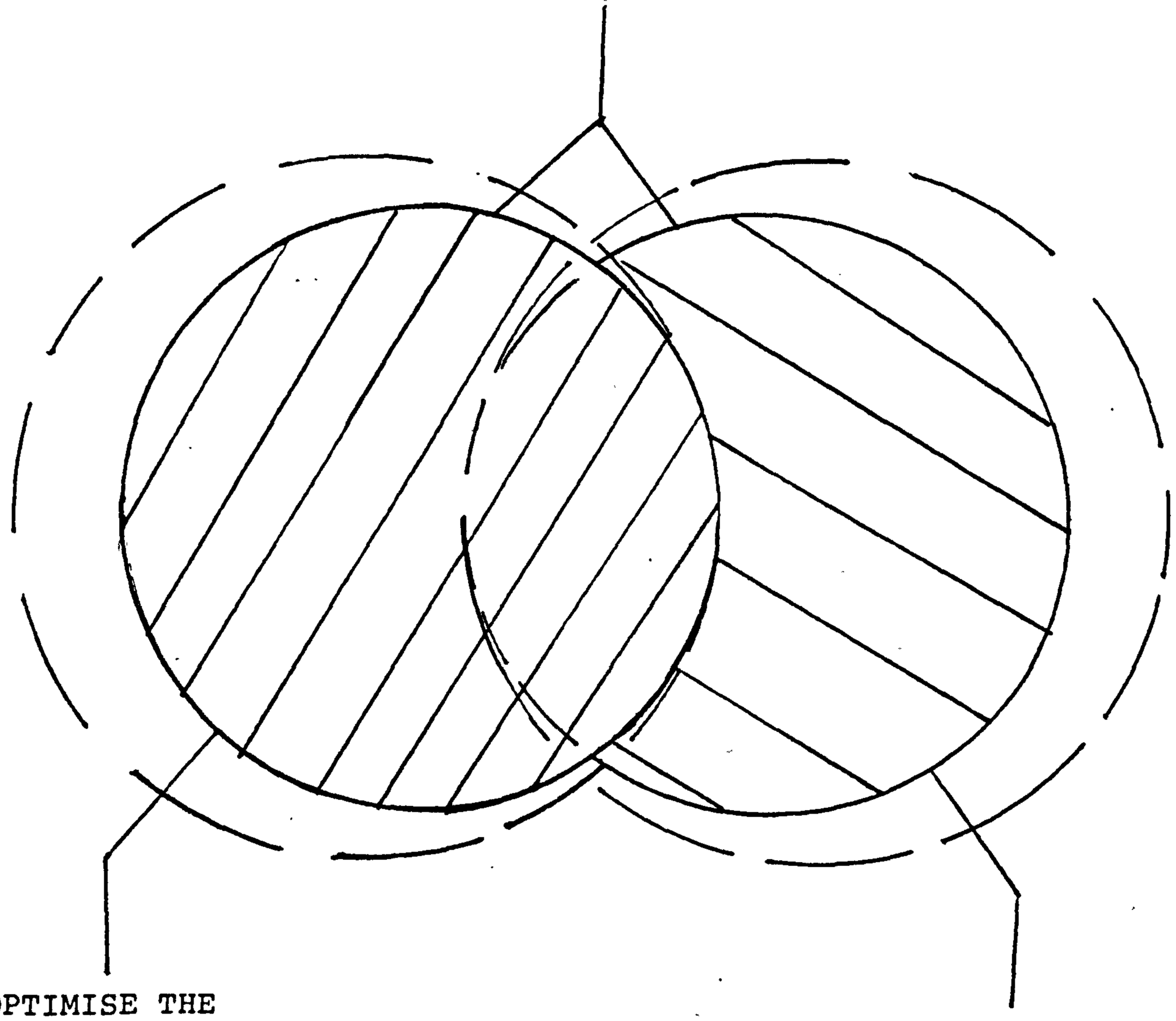

OPTIMISE THE
DESIGN FROM
THE MANUFACTURE
POINT OF VIEW

OPTIMISE THE
DESIGN FROM THE
COST POINT OF VIEW

ARRIVING AT MOST ECONOMIC
MATERIALS AND METHODS
AND THEIR CORRESPONDING
DESIGN FOR COMPONENTS
& SUBASSMEBLIES TO MEET
PRODUCT REQUIREMENTS

DESIGN COST CONTROL

FIG.(5.4) ANALYSIS OF THE DESIGNER MAIN TASKS

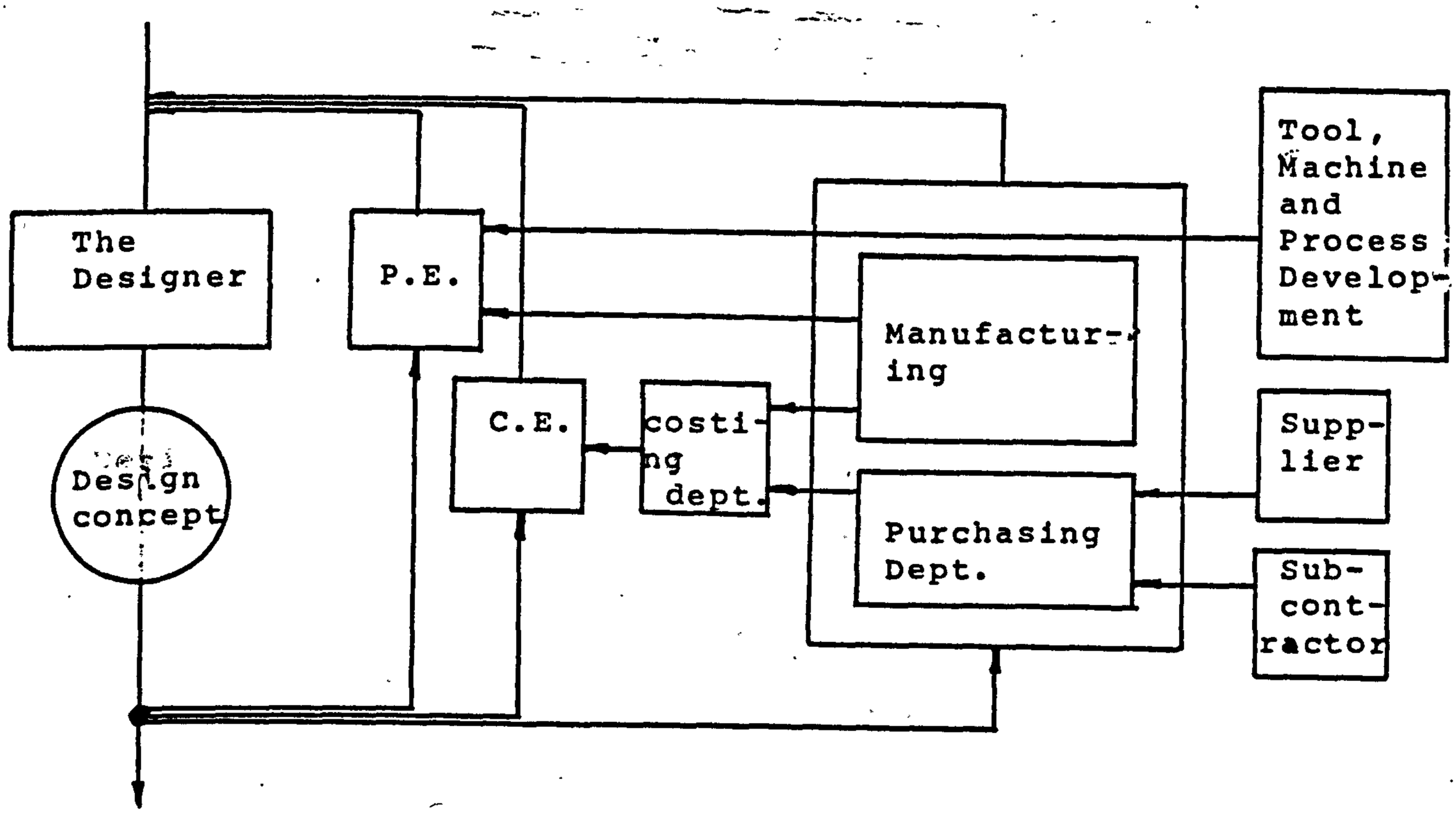

Fig.5.5 The interface between the engineering manufacturing and the engineering design

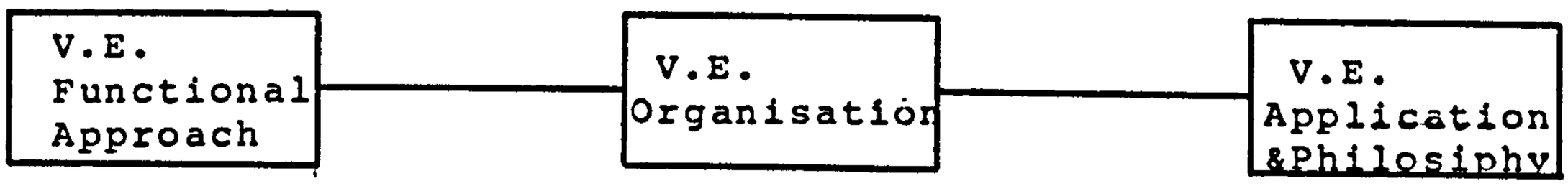

Historical Sequence of Value Engineering development in Great Britain

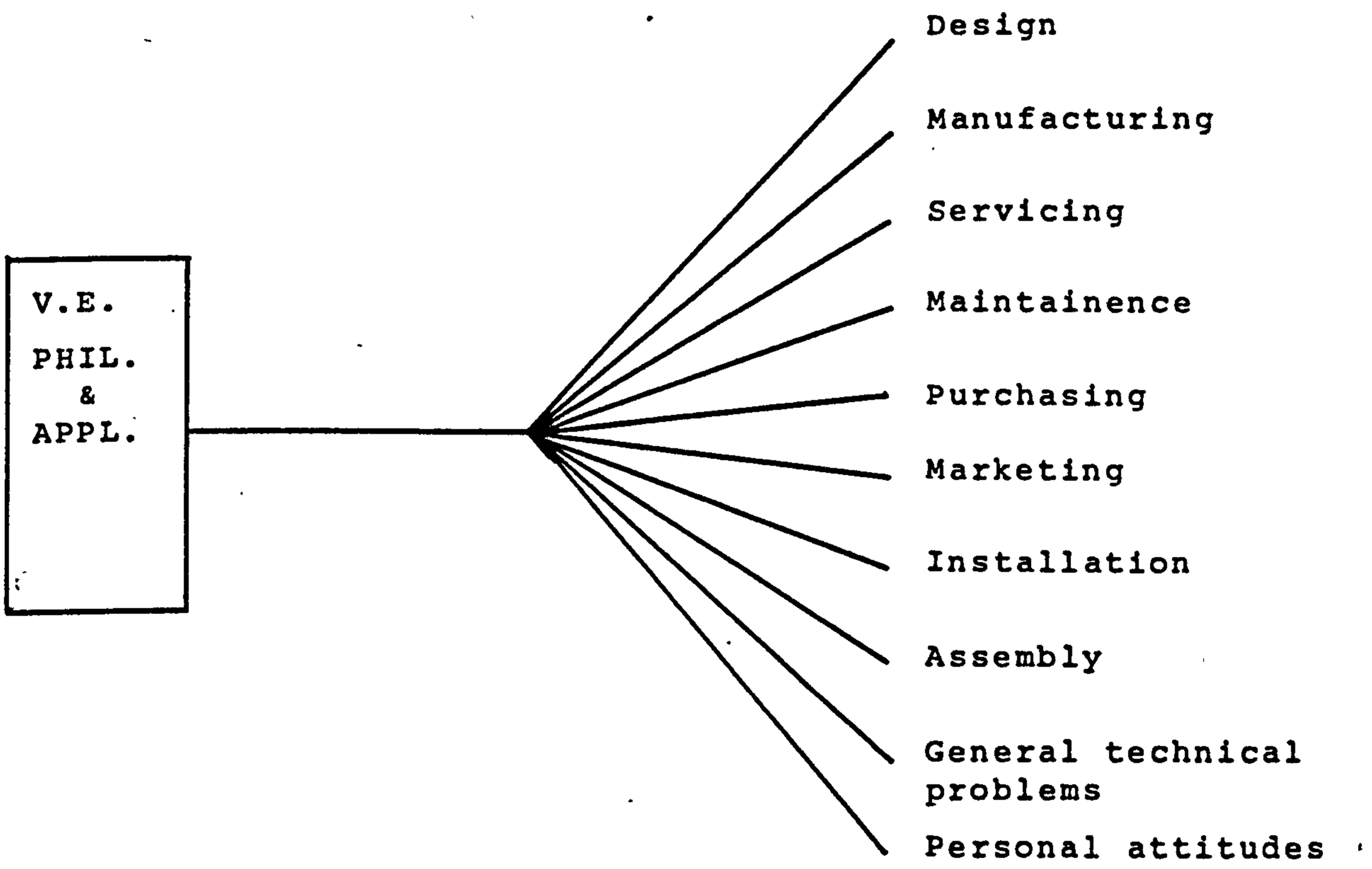

Fig.5.6 Areas of Value Engineering application in the British industry

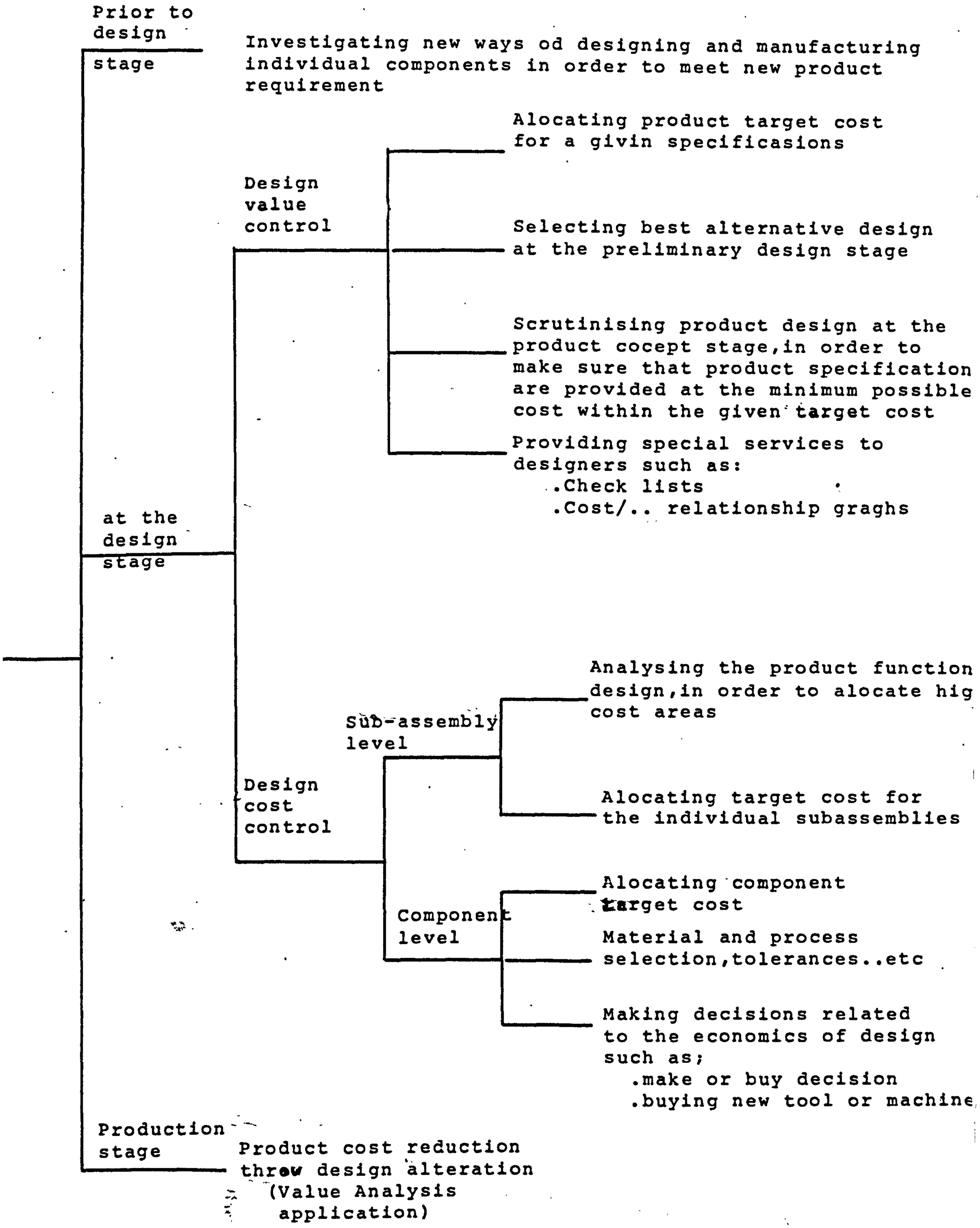

Fig.5.7 The application of the value engineering functional approach into areas related to product design

Fig. 5.8 Value Engineering application to products at the production stage

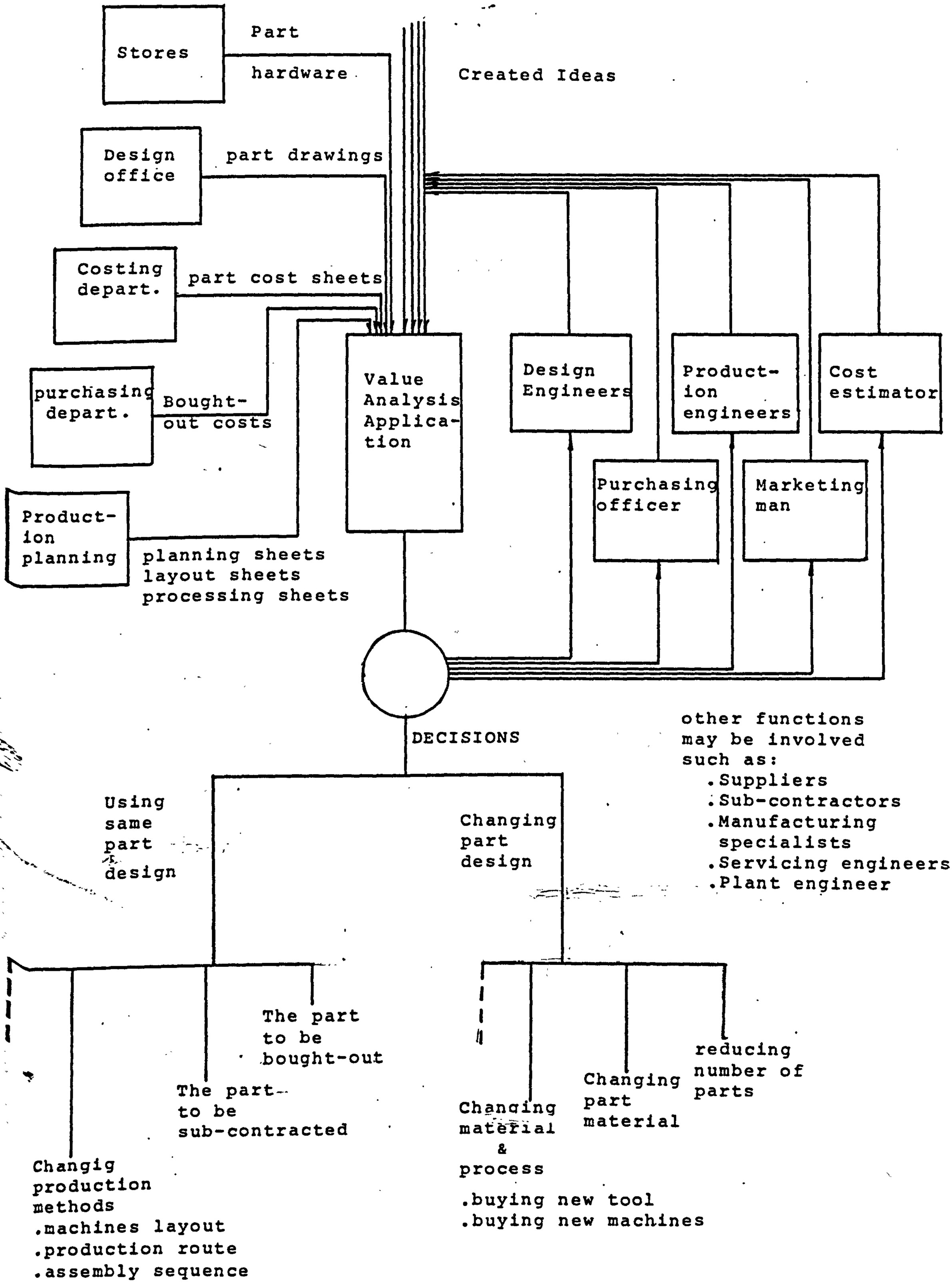

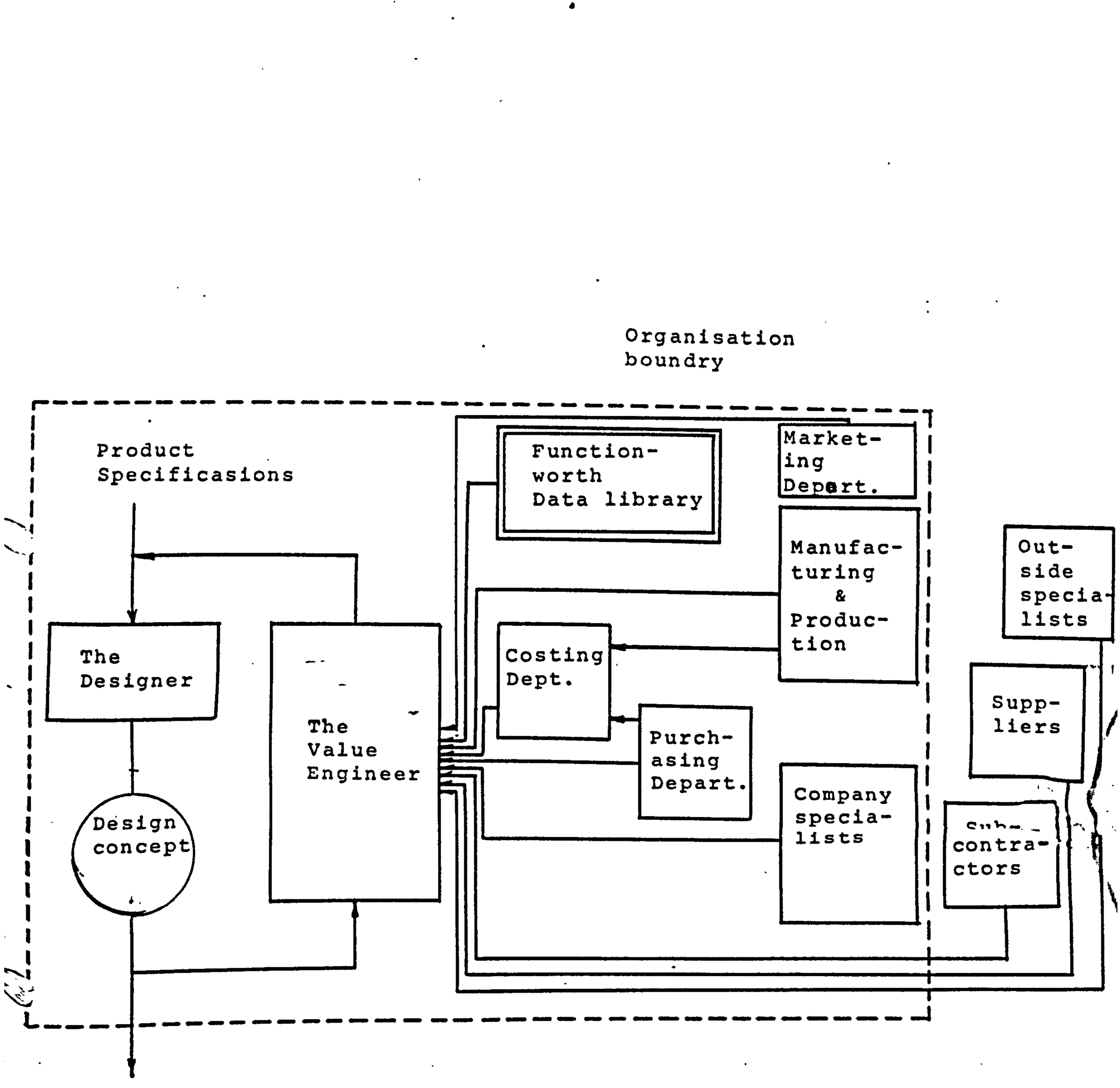

Fig. 5.9 Interaction between the Value Engineer and other organisation functions at the design stage

FIG 5.10 THE EMERGING GROWING NEED

GROWING FACTORS GOVERNING THE MANUFACTURING AND THE MARKETING OF MARKET ORIENTATED ENGINEERING PRODUCTS

Sociological Factors Imposed by the Market

Growing pressure on the product selling due to:-
(a) Competition
(b) The need for more superior products at more economical price (Merchant)

Product functional requirements are continuously growing due to the fast growing of market requirement (Merchant)

Economical Factors Imposed by Industry

Manufacturing resources in terms of materials, man power, plants and capital is increasingly becoming more and more expensive resulting in continuous rising of the product manufacturing cost and consequently the capital required for investment (Chisholm & Fogg

THE GROWING NEED

Bearing in mind that the overall objective of the engineering organisation is to achieve an adequate return on capital invested, there is a growing need to establish more rational and efficient means with which to economise in the use of manufacturing resources to meet the growing product requirement and meet pressure on the product selling price.

CHAPTER (6)

CASE STUDY (1)

"REDESIGN OF AN EXISTING PRODUCT FOR ECONOMIC MANUFACTURE"

" DESIGN OF A NEW RANGE OF OVERHUNG MOTORS FOR COMPRESSOR APPLICATIONS FOR REDUCED MANUFACTURING COSTS

6.1 INTRODUCTION OF THE CHAPTER

This case study was chosen to illustrate the need and the importance of the clear understanding of the market needs, the required present and future pricing policy to ensure the competitiveness and hence the need to establish cost targets, to guide the designers to establish new models to meet the market demands. It is a known facts that much of the competitiveness can be achieved at the conceptual and functional design stage. However , it is also shown that establishing the cost of each functional area to identify the cost sensitive areas, is essential to the overall process of design for economic manufacture. The study also shows, that before embarking on the design revision of a product, the current causes of high cost and long delivry times must be thoroughly investigated to avoid the repitition of any problems in the future .

6.2 THE IMMEDIATE BACKGROUND TO THE PRESENT CASE STUDY

The study company manufactures a wide range of electric AC induction motors as well as other rotating machinery equipment.

As part of its motors range, the company produced in the past a special type of motors for compressor drives which was known as the (overhung flange mounted shaftless motors). This particular motor range was produced to suit compressors of three major customers, these are compair Ltd. bells&morcombt and ingersoll Rand , all of the UK.

Due to several , technical and economical , reasons this particular motor range had to be discontinued and business with the forgoing companies was temporarly siezed. This have resulted in a situation where by the market of the overhung motors became more or less monopolised by limited number of suppliers which inturn had allerted the customers to the fact that the market would demand another competitive supplier, to ensure price competitiveness.

As a result , the endusers , i.e. customers of this range have decided to encourage the study company to resupply to the market there existing range of overhung motors. In the recent time several meeting took place between the study company sales function and personnell from the customers in which customers expressed deep

personnell from the customers in which customers expressed deep interest in placing business again with the company if they were able to supply the overhung motors more succesfully, i.e.at a more competitive price and technically better.

It was established in these meetings, that providing that customer requirements are met, the market potential would be high . It was estimated that the order level ,from the three customers will be in the range of 100-150 motors per annum , which would result in a sales turn over of something in the range of £300,000 to £ 500.000 a year .

One of the three customers, i.e. compair Ltd., was pressing the study company to submit quotatio. for the whole range for immediate ordering on the above basis, the management of the study company have encouraged full investigation into the possibility of resuming the manufacturing and the supplying of the overhung shaftless motors range.

This study reviews in some details the technical and economical limitat_ons of the range previously manufactured and discusses recommendations for the development of a new competitive range of motors.

6.3 STUDY OF THE SPECIFIC PRODUCT REQUIREMENTS AND IDENTIFICATIONS OF THE EXISTING PRODUCT RANGE:

It was decided as part of the overall study , to review in general terms the product requirements and the boundries of the range of motors previously produced. This included review of the product design configurations, special features and size and number of motor frames being produced for each customer with their associated outputs.

6.3.1 MECHANICAL CONFIGURATION

The overhung motors are designed specifically to drive reciprocating air compressors, the motors are therefore shaftless. The stator frame assembly is bolted to the crankcase of the compressor, whilst the rotor assembly is fitted to an extension of the compressor crank shaft, overhung from its drive-end bearing as shown in Fig.(6.1). In certain designs an external bearing mounted in the end cover is fitted to support the rotor assembly . Fig.(6.2)

6.3.2 PRODUCT REQUIREMENTS

Beside the general requirements of the electric motors in terms of reliability, etc. an essential feature of this type of motor is ts alignment capability . The stator flange of the motor has to fit the crankcase lip of the particular compressor, the rotor hub has to fit the tapered extension of the crankshaft and when the stator assembly and rotor assembly is assembled to the compressor, the stator windigs and rotor windings have to be aligned and the core air gap has to be kept within certain limts. (refer to Fig 6.1)

6.3.3 PRODUCT RANGE

Electrically, the range previously produced covered both cage and spliring motors, basically slow speed machines, i.e. 735 RPM (8Pole) , 585 RPM (0) Pole) and 485 RPM (12 Pole) and suitable mainly for low voltages (415V). Tables 6.3 and 6.4 list the motor range frame sizes, their associated power outputs and their end users. From the mechnical point of view, a range of standardised, as well as specially made components, were used to cover the diverse customer's requirements , Fig, (6.5) reviews the general

compressor details of compair Bellis & morcombe and Ingersol Rand respectively, and their corresponding motor drives.

From the figure it can be noticed that crankcase dimensions and shaft geometry differs according to the compressor size and varies from one customer to another. Also steps of the input absorbed power varies considerably from one compressor to abother . Fig. (6.5) also shows that all motors supplied to Compair Ltd., are of taper shaft self- supported type with no external bearings, up to and including the largest frame (H14). With regard to Belliss & Morcombe, all the motors supplied initially , are of the parallel shaft type with steady bearings for frames H11 to H13 inclusive . At a later stage, taper shaft compressors were introduced and consequently motors with no external bearings were supplied, at certain frame sizes. For Ingersol Rand , all motors supplied had a steady bearings mounted on end cover, although the compressor shafts were of the taper type. For the purpose of this study the overall range of overhung motors had to be analysed and sub-divided, according to the motors general design arrangments into four different generations of motors, as shown in Fig.(6.6),(6.7),(6.8),and (6.9).

6.3.4 DESIGN MODIFICATIONS

At some stage, following a complaing by clients regarding motor temperature rise and noise, the stator frame design had to be altered by adding extra ventilation opening and top drip-proof cowl in order to improve the motor ventilation and reduce motor noise , Fig. (6.10).

Subsequently the company electrical department carried out certain tests on some of the motors of modified designs, and it has been reported that the temperature rise, as well as noise level , has been considerably improved. As a result of these tests suggestions were made for even further design modifications, which would improve ventilation still further and consequently increase output coefficients.

6.3.5 REASONS FOR DISCONTINUING THE RANGE

A large percentage of the overhung motors were made from a kit of parts, which were previously ordered by the customer and stocked

against a specific number. The customer would order and pay for a kit of parts sufficient to make 5 to 10 motors, then at a later stage, the customer would call for 1 to 3 motors to be completed, assembled and delivered. The appropriate parts to fulfill this order will be called for from the stock assembled, tested and delivered. Some of the motors, especially the those of large frame size, were ordered to be made from scratch . From the customer's point of view , the major problems associated with the overhung motors supplied by the study company were as follows:-

- Delivery - (long and late delivery)
- Compatibility - (misalignment)

  and to a lesser extent

- The prices

In some instances the quoted delivery was up to 30 working weeks and even so the company still could not meet the delivery target. On the other hand when delivered, in more than one instance, the motors have developed alignment problems when assembled into the customer compressors. More over prices, on average , were higher than the competition .

From the study company point of view, manufacturing the overhung motors was associated with several in-house problems which have lead to delays on delivery, icreasing in cost and the impaired quality of parts. The decision regarding discontinuing the range was finally taken because the motors were believed to have been making loss, due to the high cost of manufacturing.

6.4 INVESTIGATION INTO CUSTOMER REQUIREMENTS POTENTIAL COMPETITION AND MARKET PRICE

As a result of splitting the range into four generations it was decided as a start to focus the study on one type of the motor (i.e. one generation) . After a discussion with the study company sales function, it was agreed that the motors first generation are the most popular type and consequently warrant further investigaion.Therefore an investigation was made to establish the particulars of this generation i.e. existing frame sizes within the range, their associated powers, company prices, the corresponding competetive range in the market and associated prices. As a result of the findings table 6.11 emerged.

The table shows that the competition in this instance is represented by G.E.C of U.K.

Using the contents of the table and also after discussion with the study company sales funcation the following was noted :-

a)For the comparable frame sizes for both companies i.e. the study company and the comptetion , the motor power range are marginally different , being wider for G.E.C. range .However the Prices are higher for the study company.

b) Due to this if the customer specified motor power falls within " the study company " comparable frame size, the resulted quoted price by the company would be some how competitive and can be tolerated by the market. For instance if the customer requested motor of 185 HP , the company would offer frame H 11/300 which although 14% higher in price than G.E.C (C 60 B) frame , this diffenence in price is acceptable to the customer. The same can be applied to specified powers of 130 HP , 225 HP, 240HP & 280 HP.

c) If however the specified motor power falls outside the power range of the company comparable frame it is at this case that the price becomes too high to be tolerated by the market. The best example of this case was stated by the companys sales function i.e. Specified motor power of 195 HP. In order to meet this power the competition , i.e. G.E.C. would offer frame C60B for a price of £ 2,430 whilst the study company would have to offer a comparatively larger frame (i.e. H 12/260) at a price of _ 3,695 which is 50% higher than competition. It is believed that this particular instance was repeated frequently and therefore reported by the

company sales function to the management. As a result of these preliminary findings it was necessary to find out whether these incidents can exist in the future.

I was therefore decided that before cosidering any further investigations it is essential that a clearer idea of future market i.e. specific customers requirements should be established. For this , the biggest ustomer of this type of motors, i.e. compair Ltd. was approached in order to determine their possible future requirements regarding motors favourable gross powers, speeds, design etc.

As a result of the inquiry, Compair Ltd. have responded by forwarding certain specific information as given in tabel(6.12) . From the information given in table (6.12) , it was noted that in order to meet the customer future requirements , whilst the competition can use two motor frames only (i.e. c 53c & c 60 B) the study company would have to deploy three motor frames (i.e. H 10/270,H 11/300 & H 12/300). This particuar finding hilighted the fact that a thorough invetigation would be required before any conculsion can be arrived at.

As a result , it was decided to subject the three above mentioned frame sizes to another study to investigate aspects related to their design, manufacture and cost.

However, frame H 11/300 was , considered, typical and was therefore selected as a candidate for this particular study.

6.5 INVESTIGATION INTO PRODUCT MANUFACTURING COSTS AND PRESENT METHODS OF MANUFACTURE

As a result of establishing future customer requirements it was decided to extend the present study further to include analysis of cost.

A typical design from the motor range first generation (i.e. frame H 11/300) was selected for this particuar study . This section reviews the employed methods of manufacture for the various parts of the motor, the motor cost break down , and cost analysis for the various subassemblies.

6.5.1 COSTING OF THE MOTOR

A H 11/ 300 - 8 Pole motor , manufactured for compair Ltd., in 1976 /77 was chosen as a candidate for cost investigation . Kits of parts for 8 off were ordered to be made and stocked in November , 1976. In January , 1977 , two complete motors were ordered to be assembled from the stocked parts .

Computer prints for the motor costs were called for, cost codes were interpreted, and cost values were updated to todays values using appropriate escalating factors for material and labour. The cost breakdown for the individual components and operations are listed in table (6.13a) and table (6.13b).

6.5.2 IDENTIFICATION OF METHOD OF MANUFACTURE, AND INVESTIGATING PROBLEMS ASSOCIATED WITH THE PRODCUTION AND TESTING OF THE MOTOR

For a further investigation of problems associated with the manufacturing of the overhung motor range, the same motor design, i.e. S.C.R. motor with taper bore for the H/ 10 , H/ 11 and Table frames was selected for the study .

Table (6.14) reviews the list of component parts incorporated in the motor design , and their materials and method of manufacature. Reference can be made to the exploded view of the motor Fig .(6.15) for details of the components involved in building the individual subassemblies.

Further more, certain major components and operation were selected for further detailed study of methods manufacture.

The methods of manufacturing the motor core plates, the rotor hub, the statur frame and the fan were investigated, and these are given

in Fig. (6.16) (6.17),(6.18),(6.19) respectfully.Also methods of assembling and testing the motor were investigated and these are given in Figs. (6.20) , (6.21)&(6.22).

The investigation has resulted in the discovery of several problems which were associated with the motor manufacturing , assembly and testing that have lead to the delay in delivery and the impairing of the final quality and compatibility of the assembly .

These are summerised as follows:-

a) Casting of the stator frame.

b) Machining the rotor hub taper bore.

c) Finish turning the rotor assembly.

d) Testing the complete motor assembly.

Given below are brief definition of each of the above problems.

a) CASTING THE STATOR FRAME

The main reason for the delay in delivery was the non-availability of castings. This was , inturn , due to the following:-

Sortage of cores-two core boxes were used for the three frames H 10, H11 and H 12 for the three customers.

Shortage of patterns-one stator pattern available per frame size with three different bolt-on flanges, each to suit the compressor crankcase of the individual customer. The time to change over flanges was considerably long.

Also , when the new design was introduced the pattern did not accomodate the features necessary to produce the extra ventilation opening in the cast frame. Consequently it was necessary to mill the openings after casting, causing further delay in obtaining castings.

b) MACHINING THE ROTOR HUB TAPER BORE

Fig. (6.17) shows the sequence of manufacturing the rotor hub taper bore.

It can be seen that the taper bore machined to a plug gauge made to the size and approved by the customer for the specific compressor shaft. For some reasons, machining the taper correctly to gauge gas been a problem and consequently , in many instances, hubs were rejected at a later stage due to this. Some of the common problems experienced with finished machined hubs were as follows:-

* Wrong taper angle-resulting in a faulty hub.
* Oversize bore-resulting in either completely scrapping of the hub or making a new adaptor plate on which to mount the fan for assembling purposes.
* Poor finish - resulting either in machining the hub oversize to obtain the required finish , or accepting as is which , in turn , cause problems at a later stage while testing the motor or finish machnining the rotor assembly.

c) FINISH TURN THE ROTOR ASSEMBLY

The assembly procedure for the rotor is shown in Fig. (6.21) .
The rotor assembly would be finished turned after building the core and winding the rotor, to ensure that the complete rotor pack would be running true when assembled to compressor shaft.
For this purpose a stub shaft is used which exactly simulates compressor shaft. The main problem was getting the shaft to run true to itself in the centre lathe, before mounting the rotor pack.

d) TESTING THE MOTOR

Schematic representation for testing the motor is shown in Fig.6.22.
Initially the motor assemblies were sent to customers without being dynamically tested . In many instances the rotor hubs did not fit the compressor shaft for which it was machined .Therefore It was decided later on that every overhung motor be tested dynamically , basically, to ensure that the delivered motor can be assembled to the customer's compressor . A test rig was especially built for that purpose, and the stub shafts were used for the purpose of mounting the rotor hub into the rig.
However , the main problem which arose at the time was again adjusting the stub shaft to run true to itself before assembling the rotor refer to Fig.(6.22)
Later on , it was suggested that a second test rig be built in order to minimise the number of times the stub shafts had to be changed on the rig, to cater for different taper geometry of hubs . This suggestion was not followed.

6.5.2 COST SYNTHESIS AND ANALYSIS OF MOTOR PARTS AND SUBASSEMBLIES

6.5.3 COST SYNTHESIS AND ANALYSIS OF MOTOR PARTS AND SUB ASSEMBLIES

In order to support the present study , it was decided that it is essential at some stage to analyse the motor manufacturing costs in order to identify high cost areas and to establish the reason for these high costs.

It was thought however, in order to achieve the above successfully it is necessary first to break down the cost of the complete assembly ito meaningfull areas such that each area can be looked at in isolation for further study and analysis, with the ultimate objective of achieving better ways of doing things. For this it was found that the information obtained regarding the motor methods of manufacturing and their associated problems, can be used as guide lines to achieving the proper cost break down .To start with , the information given in table (6.14) which lists methods of manufacture for individual component parts were used in association with the motor cost break down , previously given in tables(6.13 a & b)

To obtain a complete and detailed cost break down for the motor as shown in tables (6.23 a & b) .

The contents of these tables was used as a reference in all subsequent studies and analysis.

COST REDISTRIBUTION & ANALYSIS

The first attempt to divide the motor cost into meaningfull areas was made by summerising the contents of tables (6.23 a & b) into three major areas as shown in table (6.24)

Table (6.24) shows that these selected areas are
the total costs of stator pack , the rotor pack and motor assembly individually. Furthermore major areas are subdivided into materials and labour, and into other selected sub areas.(refer to table 6.24).

From the table, the overall break down of costs shows that building the complete stator pack represents almost 58% of cost buildings the rotor pack and testinge the motor represents 33% and 9%of total costs respectively.

Considering that the stator pack and the rotor pack are physically two separate assemblies, the above figures intially hinted that the

cost of building the stator pack is proportionally high and warrant of analysis in isolation. However later on it was found that it would be fruitless conclusion to anlyse the two seperate assemblies in isolation.

This was arrived at by examining the current methods of manufacture, (fig6-16).The figure shows that the stator and rotor core plates, alth_ugh serve entirely two different purposes and used seperately, are in reality produced simulteneously from one common part, and bought out as one item. For this reason, dividing the costs of the core plates into two portions to be analysed separately would have been meaningless and misleading. The above analysis have lead to the selection of the first meaningful cost area for analysis;this being the cost of "bought -out' stator and rotor core plates togeter, i.e. (£289+£233=£512). This represents 17% of the total production costs of the motor, see table (6.25) .

Using the same above argument , the cost of " Bought Out" stator copper and rotor copper has been individually isolated , which cost £ 160.00 and £ 67.00 , and respectively represent 5.3% and 2.2% of the total production cost of the motor, see table (6.25) . Despite of the fact that these items, comparatively , represent a small percentage of cost, these cost elements are independent from the rest of the poduction costs and also independent of the each other.Therefore it would not be wise to include them with other cost areas.

Table (6.24) again shows that another obvious cost area, which should be isolated for separate analysis ,is the total building the stator frame with its associate parts, i.e. £ 884.00 , which represent 29.5% of the total cost of production cost of the motor,see table (6.25).

The reason for this is the fact that the stator frame, with its associted parts i.e. mesh guards, cowls etc., is considered to be an intergrated but independent part of the motor .This can not under any circumstances be elimitated or combined with any other part. On the other hand, this total cost of the frame cannot be subdivided into smaller values, since that the elements of the cost of all parts are interlated and very much dependent on each other. For the stator pack , after isolating the cost of the frame, the

core plates and the coper, three should be one logical cost area left for analysis which is the cost of " Building & Winding pack",and " fitting pack to frame".

The cost of carrying the two operastions combined ,is (£ 317.00+£85=£402.00), which represent 13.4% of total cost.This was considered a meaningfull cost area for further analysis , table (6-25).

In relation to the rotor pack , the cost of the active materials, i.e. core plate and copper has been isolated for analysis separately leaving behind two major cost areas, these being " Obtaining and processing mechnical parts, i.e. - rotor hub etc and" building the rotor pack" . With reference to the methods of manufacture , i.e. Figs(6.17, 6.21) and the problems associated with producing the rotor pack one could argue that the elements of cost associated with the above mentioned areas, are related and therefore, for the purpose of analysis these two areas must be combined. The total cost of (£ 419 + £ 276= £ 695), which represnts 23.3% of total cost is therefore considered one cost area, fig. (6.25).

The cost of testing the motor assembly , i.e. £ 280 which represent 9.3% of total cost was considered one cost area well worth of further analysis, table (6.25).

The resulted cost areas are all listed in table (6.25) .Table (6.26) lists same cost areas, this time in a descending order starting with the highest cost .

The table also shows where priority should be given if improvement in cost has to be achieved .

6.6 ANALYSIS OF THE RESULTS OF THE STUDY AND RECOMMENDATIONS

6.6.1 The Overall Strategy and Objectives

From the Preliminary investgation , it was established that the Customers were unsatisfied with the product and the study company believed that product itself was not proifitable.

The customer considered the product to have a poor performace on site, late delivery , and in some instances a high selling price . The study company'S main problem with this particular range was the high manufacturing costs. On the basis , it was decided that in order to resume manufacturing and supplying this range the following criteria should apply :-

- The assurance of satisfying clients requirements of supplying motors assemblies which are technically sound , at resonable delivery times and at prices that matches the comepetition.
- The assurance of achieving reasonable return on capital invested by the study company.

The analysis of the present problems .The causes and the recommended actions to achieve the above objectives are discussed in the following section.

6.6.2 Analysis of the Present Problem and Identification of its Causes:

A) Element of the Problem:

To conclude , the study indicated that the problem associated with the production of motor range have three main contributing factors they are:-

- Poor site performance of the motor due to impaired quality of the components and sub-assemblies. This is in turn is represented by

* Unmatched taper bore to compressor shaft.

* Missalignment of rotor assembly with stator assembly.

- Long Lead production Times
- The high product cost has two different aspects as follows:-

* High production costs of components and subassemblies (i.e. high material , labour and overheads costs), and this can be concluded by compairing prices of comparable frame size of the study company and competition , table 6.11
* High ratio of £/HP for certain motor power outputs (Clause 6.4 -C).
See Fig. (6.27)

B) Causes of the Problem

From the information which the study unvaled it was evident that the problems could only result from the following Causes:-
- The use of incompatible, and relatively uneconomic, manufacturing processes in producing certain individual components and subassemblies. This particular factor believed to have been common to all problems.
- The use of unsound concept design for the motor.
- the use of wide range of motors to cover customer's requirements,leading to a large variety of components to cover these requirements.

Fig. 6.27 shows the relationship between the problems and their causes. The reason for assuming the foreging factors, and recommended actions are discussed in the following Clause.

6.6.3 Identifying the major areas of improvements

As a result of Problem Analysis and its identification, in order to achieve the ultimate objectives, as discussed in Clause 6.6.1,it was thought that certain major improvements have to take place in several fronts,as follows:-

a)Arriving at a better way of manufacturing and possibly designing individual components and subassemblies, with a view to improving quality , reducing production lead time, minimiuzing components and subassemblies production costs.

b) Arriving at an optimum motor functional/ Engineering /industrial sdesign which would merit an increased in power outputs for a given active materials / mechanical parts so that to minimise the overall £ / HP ratio for the motor.

c) Achieve high level of product and component standardisation to minimise the number of overall components used to cover the

range,and to meet the diverse customers requirements. Fig. (6.28). The above points are discussed below.

a) Achieving an improved methods for Manufacturing and Designing of Individual components/Subassemblies :-

An over view to the results of the study would indicate that the methods of producing certain components and Subassemblies directly contributes to all elements of the problems and should therefore be considered further for improvements. The following are the two areas were considered a worthy for improvements :-

1) Producing , Finishing and Assembling the Stator and its Associated Parts

Table (6.26) shows that the frame Assembly and associated parts represent the highest cost area of the complete motor .They also contribute to the delay of production .

In producting the Frame itself, obtaining castings is a problem due to shortage of patterns and dùe to the incorporation of additional milling process to accomodate modified design feature, from clause (6.5.2.a).

On the other hand completing the frame assembly incorporates the processing , fabrication and assembling to frame of quite number of parts which undoubtdly contribute to the time and cost factor.

To give an example , there are six different pieces of mesh panels which are used to cover equal number of ventilation opening inside the frame , the cost of fabricating panels and fitting to frame is (£64 + £ 31 = £ 95) which represent 3% of total motor cost. This is considered to be high, particularly if compared with the cost of machining and finishing the complete frame costing which is £ 90.00 . The same can be said for the fabrication and fitting of the cowl, (Table 6.23).

To improve this situation one could recommend two actions for cosiderations first to consider a modified frame design which could ensure the production of an integral frame casting with the minimum required number of complimetary parts .Secondly,to consider modifying the patterns to ensure that frame castings will include the maximum possible number of featured incorporated in the design.

In order to solve the issue of delayed production, due to shortage

of patterns,one could suggest increasing the number of patterns to the minimum number required to cover all customer requirements.Alternatively ,one can negotiate with the various customers the possibility of standardising their compressor flange dimensions so that a pattern with one flange for all customers can be used. Achieving a compromise between the two situations still can be economical.Finally,as a third option considerations should be given to seek quotations from outside suppliers, to completely subcontract frame castings.

2) Machining rotor Hub Taper Bore and Finish Machining Rotor Assembly

By refering to the reported " Problems Related to Manufacturing ", Clause (6.5.2.a) and to motor high cost areas Table (6.25),one can conclude that the processes and operaions which involve the use of the taper plug gauge and the Stub shaft are creating major problems during manufacturing , which resulting in considerable delay and increase in cost.

The cost of these operations represents 41% and 21% of total processing and total production costs respectively as follows : -

OPERATION	COST OF LABOUR& O.H.	PERCENTAGE OF TOTAL PROCESSING COST OF £1569	PERCENTAGE TOTAL PRODUCTION COST OF £3000
Machning of rotor Hub Taper Bore	£ 130	8.3%	4.3%
Finish Machining Rotor Assembly	£ 143	9.0%	4.8%
Balancing the Rotor	£ 82	5.2%	2.7%
Testing the motor	£ 290	18 %	9.7%
TOTAL COST	£ 645	40.5%	21.5%

These high costs of above listed operations is due to the long time taken
either to produce or to accommodate the Rotor Hub Taper Bore.
This inturn , can only be due to the fact that the manufacturing method which is employed for machining the Taper Bore is incompatible. This in most cases, results in causing delay in machining the Taper Bore, and in some instances, scrapping the complete Hub.
In addition , due to a resulted faulty taper, all subsequent operations are taking loner than necessary due to additional inspection and so on . Due to above it was therefore necessary to recommend substituting an alternative process for machining or producing the Taper Bore.
In selecting such a process it is necessary to consider not only the actual time taken in machining the hub but also all the likely problems that can be resulted from a faulty taper. The process would have to be compatible and capable of producing the required accuracy so that inspection and testing can be minimised if not eliminated. Equally necessary it is advisable to consider manchining the taper bore and finish turn the rotor core in the same setting, though completely avoiding the need to use a stub shaft. This is considered to be a production as well as a design issue. In this particuar case when a process is finally arrived at, the designer should be aware of all subsequent processes and inspection procedure which are associated with these components parts to enable him to arrive at an optimum design which would allow the components to be processed correctly and economically.

B) <u>Achieving an improved overall Design for the motor:-</u>

One major problem which was facing the, sales function, of the study company is the high £ /HP ratio for the complete motor for certain powers output as discussed in Clause (6.4- c).
This relative high cost of the motor, cannot be directly related to manufacturing costs only (i.e. materials & Labour), but also to power limitation of the existing frame sizes. This in turn is a

function of the overall motor engineering and functional design.

Using experimental data produced by the electrical department (Clause 6.3.4) It has been strongly recommended to consider an overall motor design to include changing and existing arrangements to achieve a much improved ventillation and consequently a higher output coefficients.

It was envisaged that change of motor concept design will include :

- Stator frame design to include much wider
  Ventilation openings with a change of the fan design .
- Fan arrangements in terms of position of the fan , fan design,and
.

End - cover design.

A high output coefficient for a given frame is considered extremely essential to minimise £ / HP ratio and meet competition .

C) Achieve high level of product standardisation

Fig. 6.5 indicate that customer requirements are diverse which have caused the developing of a much wider range than necessary .
This undoubtdly is contributing directly to the problem of long lead production time and indirectly to the motor manufacturing costs.

To help reducing the overall size of the range certain components and features should be made as standards, these should include the following :-

- Flange details of the Stator Frame
- Type and Angle of Hub Taper Bore
- Design of Core Plates
- Core lengths

In order to carry out the above recommendations, certain organisation functions of the study company should have definite tasks that must be achieved. These are summerised in Fig. 6.28. An overall design approach for redesigning the range is discussed in the following clause.

6.6.4 Recommendations for an overall design approach

Taking in consideration the previous analysis it was to recommended

that a typical design approach for the present case study should be inline with the following procedure :-

a) Establishing of overall markert requirement and market price

For this purpose an accurate survey of the Potential requirements for the three customers should be conducted. This survey should determine the following for each customer.

- Types of compressors currently in use and the likely future models.
- For each compressor the following are to be determined.
  * Flange details
  * Shaft Taper Details
  * Whether special arrangements required such as a steady bearings etc.
  * The favourite absorbed power in steps, as well as the maximum expected absorbed power from each frame.
- A reliable potential sales volume in terms of the realistic number of motors to be sold for each type of compressor.
- An accurate competition prices for establishing favourable power outputs, i.e. £ / Motor frame / Hp output.

B) Establishing of motors target prices and assemblies target costs

On the basis of the established competition prices, and by using the company pricing policy , the next logical step was thought to be establishing target prices for the individual motors, i.e. £Frame/HP, for each type of motor to meet the specific customer requirements.

The final target prices should be related to the competition and should be within the limits which can be tolerated by the customer.

On the basis of the established target prices, an overall target cost for the complete motor assembly should be established for every individual motor. This inturn would be based on the minimum acceptable return on capital (i.e profit margin), as well as minimum overhead recovery expected. This overall target cost should

be associated with overall customer requirements, required power output, and all other necessary specifications.

C) Establishing target costs and specifications for individual components and subassemblies.

The overall assembly target cost should then be divided into small portions each allocated to individual components and subassemblies based on estimated cost for each subassembly and so on . The designer then ,would be given the general arrangement of each subassembly with its associated instructions and specifications together with its allocated target cost.

D) Information feed back to designer

For each " Subassembly Design " under consideration the designer will be given all relevent information associated with it.This can help him achieve the optimum design . This should include the following :-

- Cost Breakdown for each component
- Current methods of Manufacture and their associated problem .
- The site problem which has been experiened with the particular subassembly.
- Any achieved improvement in relation to manufacturing methods and etc .

An application for the above suggested approach is given in the next Clause.

6.7 AN APPROACH FOR A DREDESIGN OF A TYPICAL MOTOR FOR ECONOMIC MANUFACTURE

To demonstrate how the recommended design approach , which has been discussed in the previous clause, can be implemented this application was considered .

The same motor which was subjected to the foreging analysis and study (i.e H 11/300 frame , 8 Pole , S.C.R.) was again selected as a candidate for a redesign process. The procedure which was adopted for the redesign process is discussed below.

6.7.1 ESTABLISHING OF CUSTOMER REQUIREMENT AND MARKET PRICE

Before embarking on any redesign process it was decided that a clear definition of future market, i.e. special customers requirements, should be established . For this again "Compair Ltd" was approached this time, to seek more specific information regarding their future requirements,i.e. compressor detail , motors favourable gross powers required, speeds, designs etc.

As a result of the inquiry , "Compair Ltd" have responded to the company by forwarding all the relevant information as given in table (6.29) , Fig.(6.30) &Fig.(6.31).

Table 6.29 shows typical requirements of "Compair Ltd" as outlined in their response to the company.

Fig. (6.30 & 6.31) includes details of compressor flanges and shafts.

It was noticed that although two drawings have been forwarded (i.e. fig.6.30 & 6.31) each to cover different compressor, the information given in table(6.29) was related only to one drawing which is C10190/528,fig.(6.31).

From table (6.29) and fig.(6.31) , the following was established :-

- There are two compressors under considerations, these are the V 350 & V 500
- The compressors although require different " Absorbed Power " range their physical dimension in relation to the flange and the shaft details are identical.
- The favourable absorbed powers by the above compressors as specified by the customers are 140 HP, 195. However, It has also

been indicated that the mamximum absorbed power for the same family of compressors is 220 HP.

- The competition can meet the above customer requirements using two different motor frames; the C53c and the C60B.

From table (6.11), previously constructed for analysis purposes, the competition prices for the above two frames were established as follows:-

C 53 C Frame - £ 2,214.00

C 60 B Frame - £ 2,430.00

6.7.2 ESTABLISHING MOTOR TARGET PRICE AND ASSEMBLY TARGET COST:

a) Selection of the relevent motor for pricing considerations:-

Having established the specific customer requirements, it was necessary to establish how these requirments can be met by using motors from the existing range. Table (6.11) shows , that three different frame sizes would have to be deployed as shown in the following tabulation clerify this:-

H 10/270	95/130	£2,283.00	£ 2,214
H 11/300	162/185	£2780.00	£ 2,430
H 12/260	186/225	£3399.00	£ 2,640

It is obvious that whilst the two compressors under considerations,i.e.V350 &V500 have identical flanges, the present range ,of motor frames which can be used to cover future customer requirement in terms of power range, have different physical dimensions (i.e H 10,H11 & H 12).

However by refering to the physical dimensions of the frames Fig.(6.5)&(6.6) and to the dimensions of the compressors Fig.(6.28) it was clear that frames H10/270 and H 11/300 have identical flange details and both can fit flanges for V 350 & V 500 compresors.

Frame 12/260 have a larger flange size and therefore can not be used .

This have necessitated that in order to meet future customer requirements the high end of the power range i.e. (162-195 HP ,

220 HP Max.) has to be covered by the smaller frame H 11/300.Therefore it was necessary to subject the H11/300 frame for the redesign process.

b) Establish motor target price

Having established the relevent motor, i.e.frame size, for further cosideration , and before proceeding with the redesign process, it was necessary first to establish a target price for this motor which would match the competition.

For the H 11/300 frame , the competition price for the comparable frame size would be £ 2,430 (from table 6.11) .

This competitive prices had to be used as a reference on which the future target price of this frame can be based.

To establish this target price, an attempt was made first to price the motor using updated available cost information . The values of the materials, labour and overheads given in tables (6.13 a&b) have been used to price the motor making use of the company full margins. The build up of the price is shown in the company pricing sheet Fig. (6.32) . Fig. (6.32) shows that , by using the full margin the final price of the motor would be £ 3,846.00 which is 60% higher than the competition price.

This price was considered very high and therefore were rejected.Not only this , but also it became clear that in order to have a future share in this particular market the company will have to accept much lower margins than those ussually applied when pricing other products.

The current list price of this motor was £ 2780.00 from (table 6.11) which still 14% higher than the competition. By consulting the company sales function it was learnt that the customer, providing that the product meets his requirements, would be prepared to tolerate a new motor price which is within 7% - 10% of the competition price depending on the size of the motor etc. This was helpful to establish a new target price for the motor as follows:

Motor target price (for H 11/300 frame)

= competition price (£ 2,430) + 7% = £ 2,600.00 (1)

c) Establish assembly target cost

The target cost achieved from equation (1)was used to establish the overall target cost for the motor. For this purpose the following margins was agreed with the company's management.

ELEMENT OF OVERHEAD	VALUE
Gross margins &administration (10%)	£ 260
Engineering work (Drawing-etc.)	£ 40
Total recovered overhead per one motor	£ 300

Total works costs = £ 2,600 - £ 300 = £ 2,300 (2)

The total works costs concluded in Eq.(2) was used as the motor assembly target cost.

d) Establishing design target cost, specification and design guide lines for individual sub assemblies

In order to achieve effective results and to meet the objective and overall target costs the complete motor assembly was broken into major assemblies and then into sub assemblies and parts, Figs. (6.34-6.43). These sub-assemblies and parts were selected in the manner such that the maximum design improvement can be achieved . For each sub-assembly, a module target cost is alocated together with design specificaions as well as general instructions to guide the designer to achieve an optimum design , a design which meets the specification within the alocated target cost.

To alocate module target costs to the individual sub assemblies, judjement has been used. The overall target cost has been broken using the present percentage of cost, the results were alocated to the appropriate sub assemblies plus or minus a margin depending on the possibility of achieving savings for the particular subassemblies under consideration - table 6.33

For each subassembly , in addition to the target cost, the designer is given cost break down of individual parts , brief of the technical history to the subassembly under study, the relevent specifications , as well as some design guide lines which could help him in the decision making process fig.(6.34-6.43).

6.8 MAIN ACHIEVED MODIFICATIONS AS A RESULT OF THE STUDY AND PROPOSED DESIGN APPROACH

Initial outcomes of the design process, gided by the, have indicated that certain modifications have been sought in several directions, and it is believed that these modifications would allow the ultimate objectives to be achieved.

The following are summary of the modifications result to :-

(A) Modification to the motor functional - industrial design

The main objective was to achieve a drastically increased power out puts from existing frames to cover certain required power range. This was achieved by completely modifying the motor ventilation circuit to allow large amount of air to pass through the motor to improve ventilation . This modification necessitated a modified ventilation opening in the stator frame as well as change of the fan design .Fig. (6.44)

On the other hand it was decided that the range of power outputs for any frame should be covered by more than one core lenghts instead of using the largest core for all outputs thus saving the cost of active materials. Three core lengths were used each frame. In order to accommodate the different core lengths rotor hubs and stator frames are designed with a built-in slots which will be used for supporting cores as shown in Fig. (6.45) . The figure also shows the new proposed out puts for the various frames.

(B) Modification to the stator frame subasembly

This area of modification required a total redesign of the stator frame, and associated parts, in order to accommodate the modified ventilation circuit design.

The new ventilation openings became wider and are covering the entire circumfrence of the frame at both ends, fig.(6.44)

In order to accommodate the new openings design the external ribs/stiffeners has been removed and replaced by additional and wider internal ribs.

As a result of this design , only two long mesh panels were needed to cover the openings, thus assembly operation can be drastically reduced. However an additional cowl was designed to cover the larger rear openning .

ASa result of this design modifications it was decided to modify the frame pattern completely to include all newelly introduced design features in order to minimise subsequent machining operations.

(C) Modifications to the processes of Buildings, winding and machining stator Pack .

In order to reduce costs in this area two different modification have taken place, they are as follows:-

- It was decided that fitting of the core pack into frame is to be clearence fit, thus eliminating the shrinking process.
By introducing this feature , it was also meant to avoid distortion of the pack. The stator key and key way had to be slightly modified.
- Second it was decided to increase the core air gap to ease tolerance, thus eliminating the process of machining the stator core after fitting to frame . It was also intended that this feature will eliminate the missalignment problem of the stator and rotor assembles on site.

(D) Modifications to the process of producing the rotor hub

The main objective in this area was to arrive at a compatible and reliable method for producing the rotor hub taper bore which was causing most of the major problems .
To produce the actual hub , several methods were sought as an alternative to castings, such as forging, fabrication and machining from solid and welding .
However,the cost advantage of these methods over the original casting method was not , justifiable. As for the taper bore it was finally concluded that the optimum method to guarantee finishing the taper bore to exact size is machining the bore on N.C vertical borer.
This operation however could only be carried out by an outside sub-contractor.
It was believed that obtaining the taper bore right- first - time will drastically reduce time taken on all subsequent assembly operations such as turn O/D , finish recess and balanced rotor .

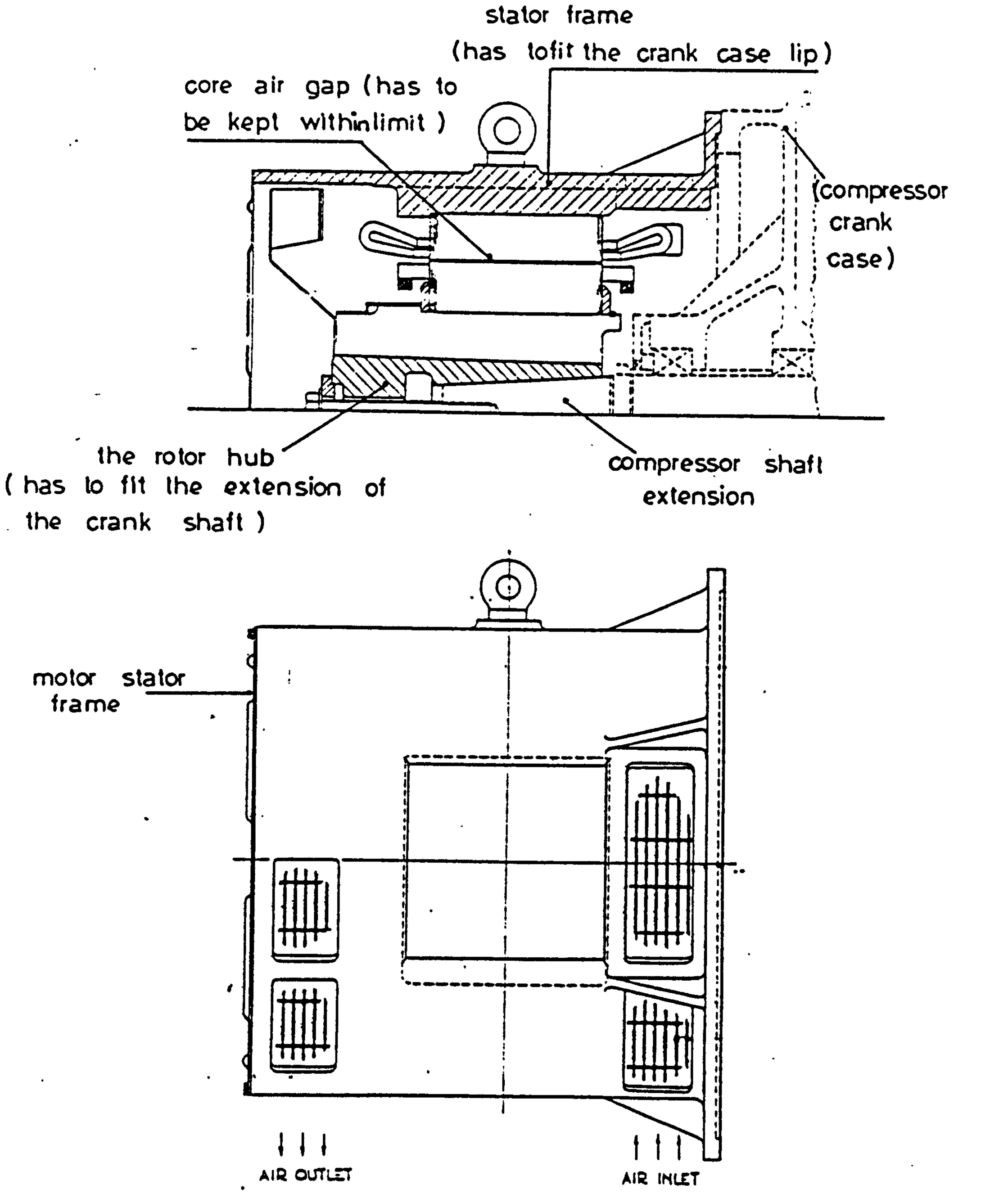

FIG.(6·1.) DESIGN ARRANGEMENT FOR OVERHUNG MOTOR TO SUIT TAPER SHAFT COMPRESSOR WITH NO EXTERNAL BEARINGS .

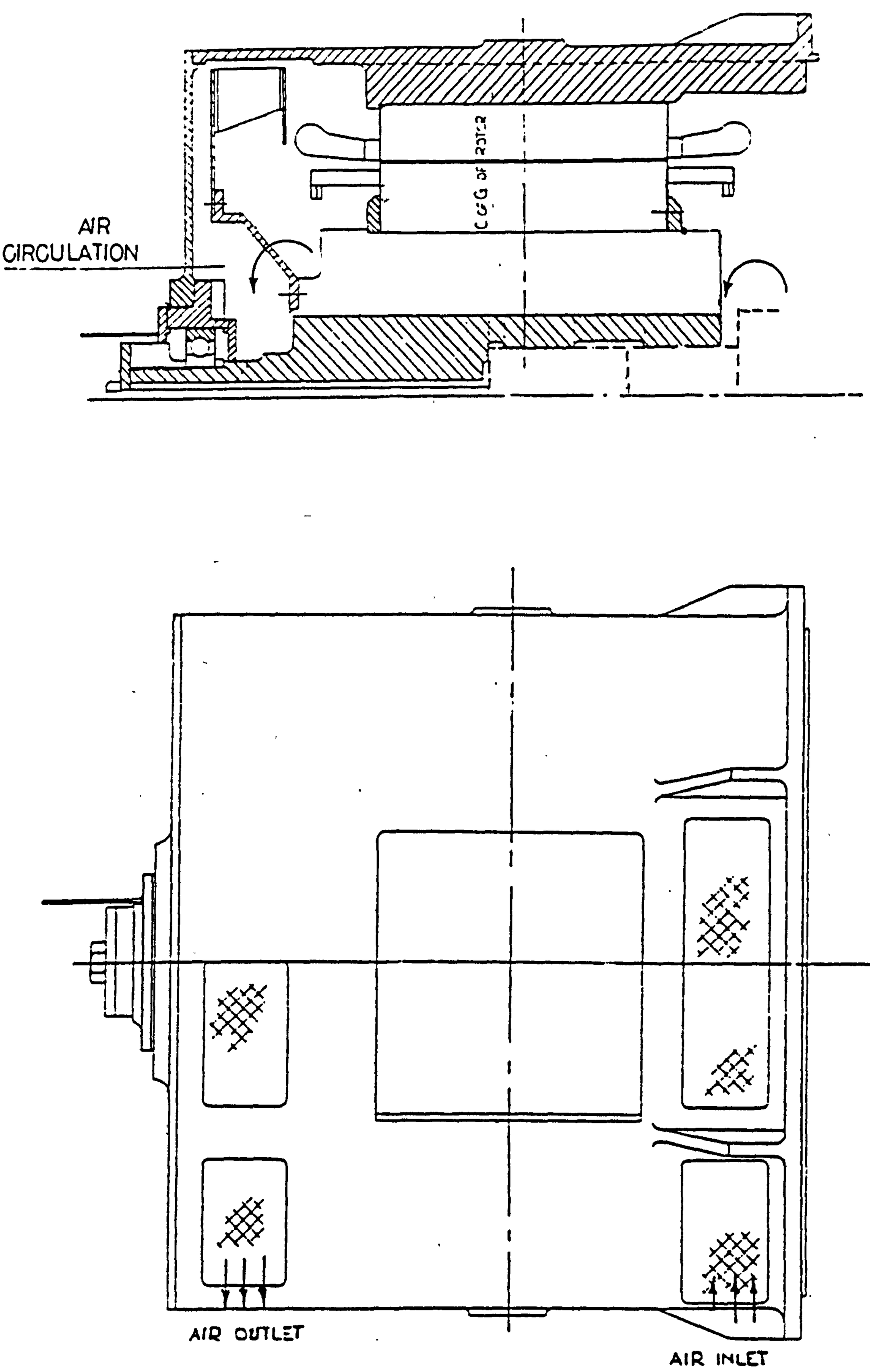

FIG.(6·2) DESIGN ARRANGEMENTS FOR OVERHUNG MOTORS TO SUIT SPECIAL PARALLEL SHAFT COMPRESSORS WITH EXTERNAL BEARINGS.

TABLE(6.3) OVERHUNG MOTOR OUTPUT LIST-8 POLE 415V/3PH/50HZ

(B.H.P)				8 POLE S .C.R. FRAMESIZE	COMPAIR	B & M	ING
80°C	90°C	100°C	110°C				
95-130	137	145	152	10/270	+		
100-130	137	145	152	11/210		+	
131-161	170			11/260		+	
162-185	195	208	216	11/300	+		+
131-200	212	223	234	12/220		+	
186-225	242	256	268	12/260		+	+
226-325	342	360	380	12/340		+	
326-380	400	420	440	13/340		+	
381-475	500	525	550	13/400		+	

TABLE(6.4) OVERHUNG MOTOR OUTPUT LIST-10&12 POLE 415V/3PH/50HZ

(B.H.P.)				10 POLE S.C.R FRAMESIZE	COMPAIR	B & M	ING
80°C	90°C	100°C	110°C				
186-225				H12/260			+
170-240	255	257	267	H12/340	+		
241/280	295			H13/340	+	+	
281/360	380	400	420	H13/400	+		
361/400				H14/400			
				12 POLE S.C.R.			
				H10/270	+		
				H13/400	+		

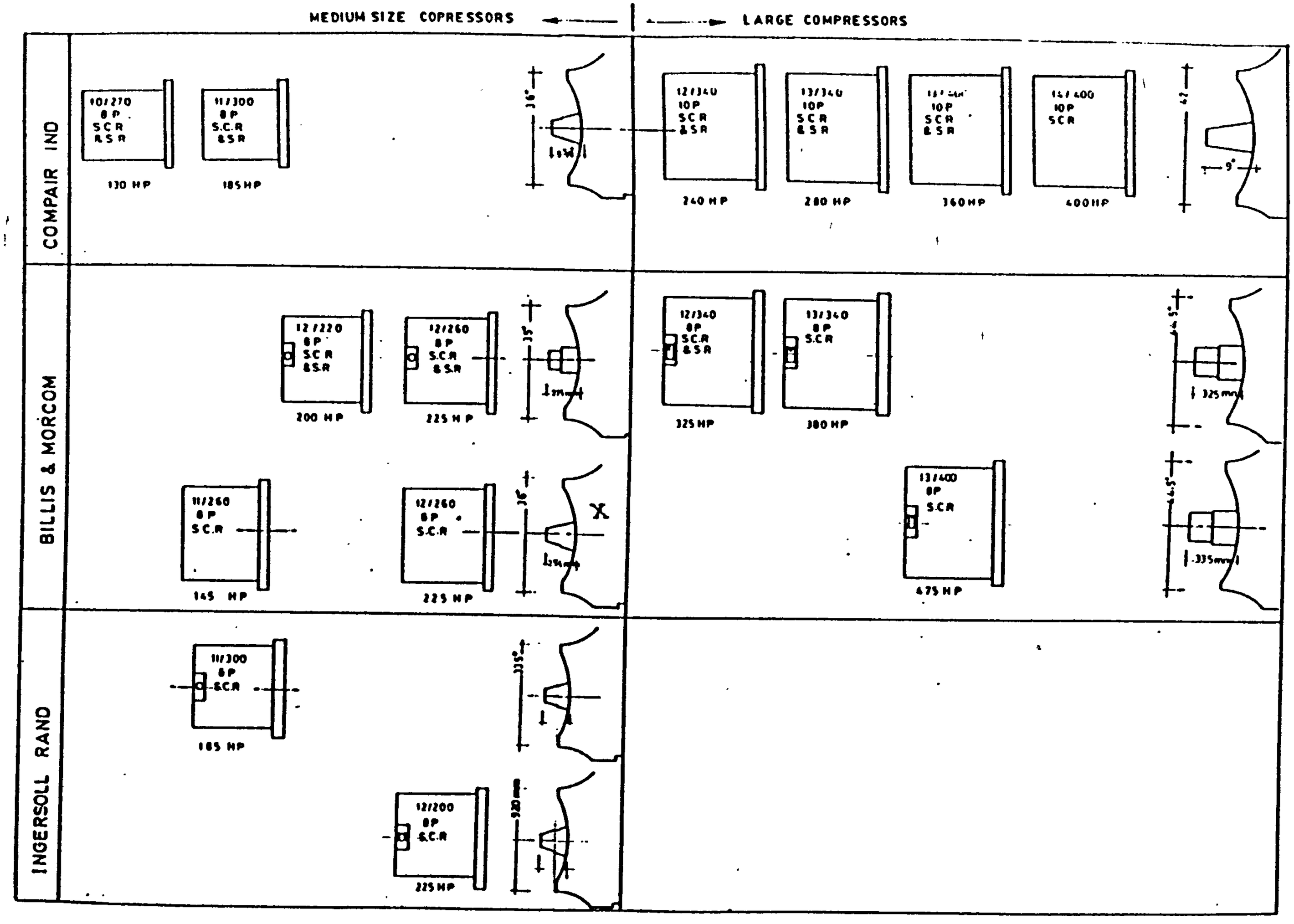

FIG 6.5 COMPRESSORS DETAILS AND CORRESPONDING M & P MOTORS

	H 10	H 11	H 12	H 13	H 14
COMP.	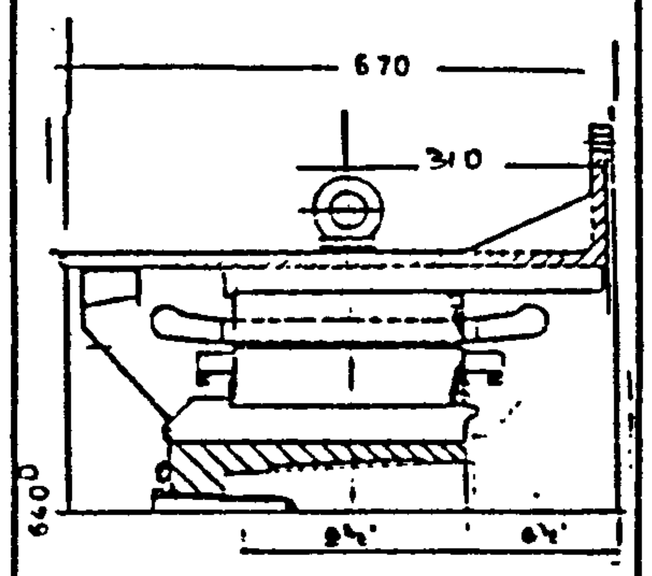 270 mm _ 8P 36"	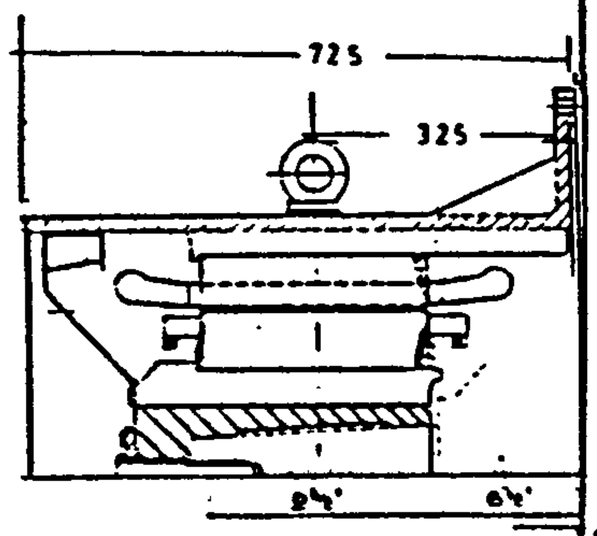 300 mm _ 8P 36"	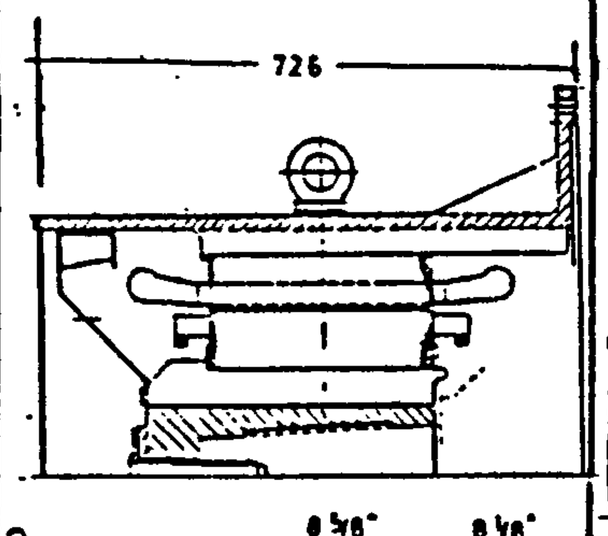 340 mm _ 10P 42"	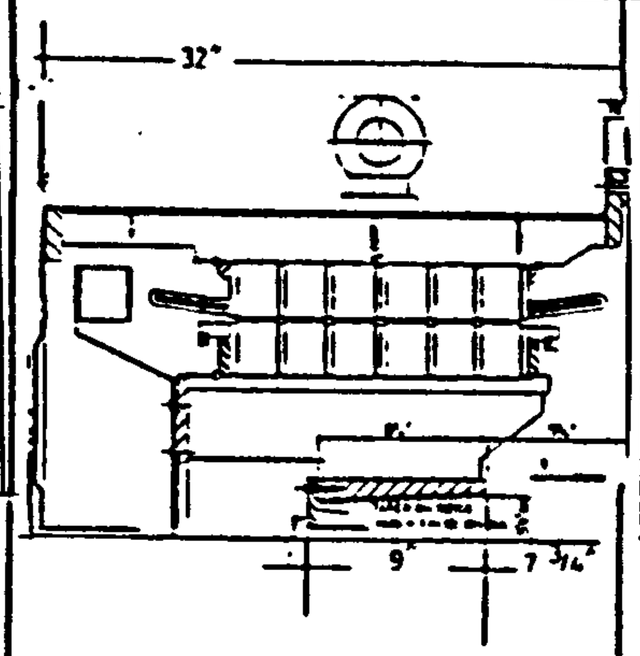 340 _ 10P 400 _ 10P 400 _ 12P 42"	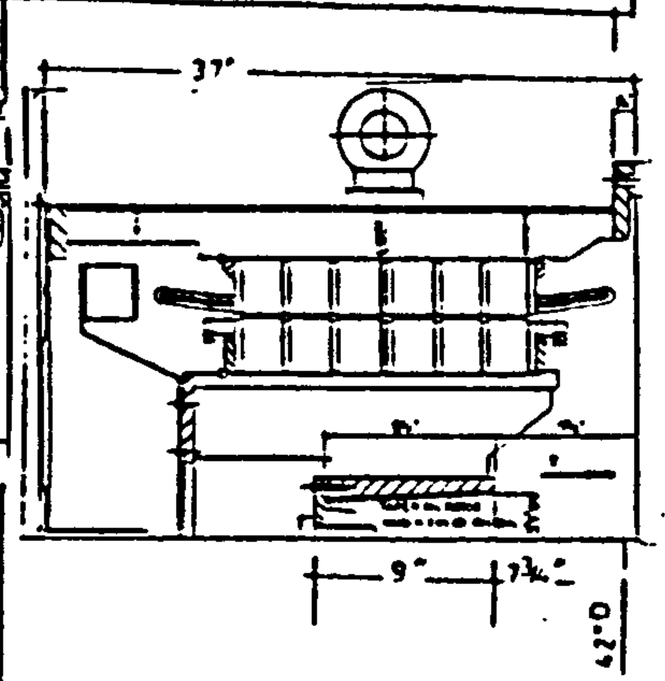 400 _ 10P
BELLISS & MORCOM	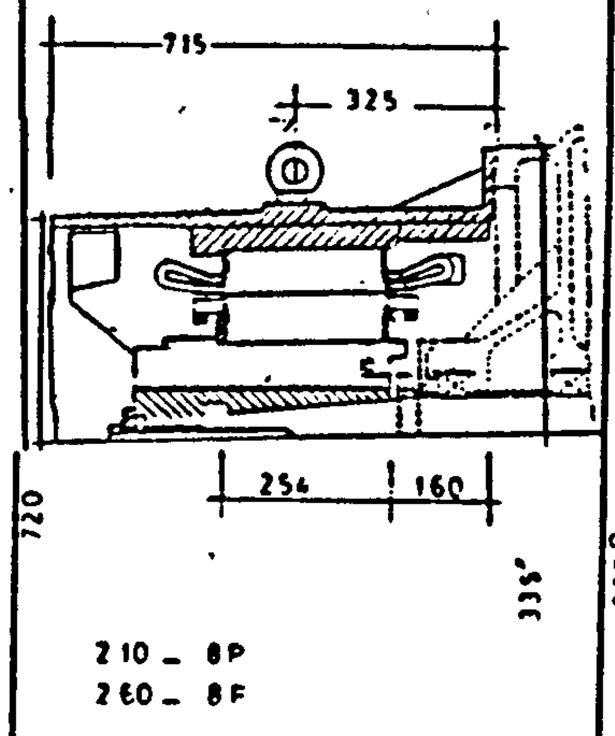 210 _ 8P 260 _ 8F	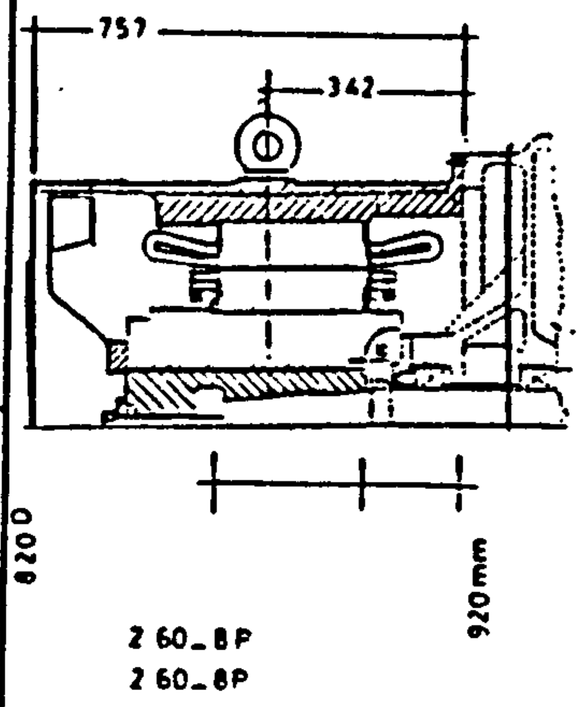 260_8P 260_8P			
ING					

FIG 6.6 FIRST GENERATION S.C.R / No BEARINGS MOTORS

	H 10	H 11	H 12	H 13
COMPAIR	N.A	N.A	N.A	N.A
BELLISS & MORCOM	N.A	N.A	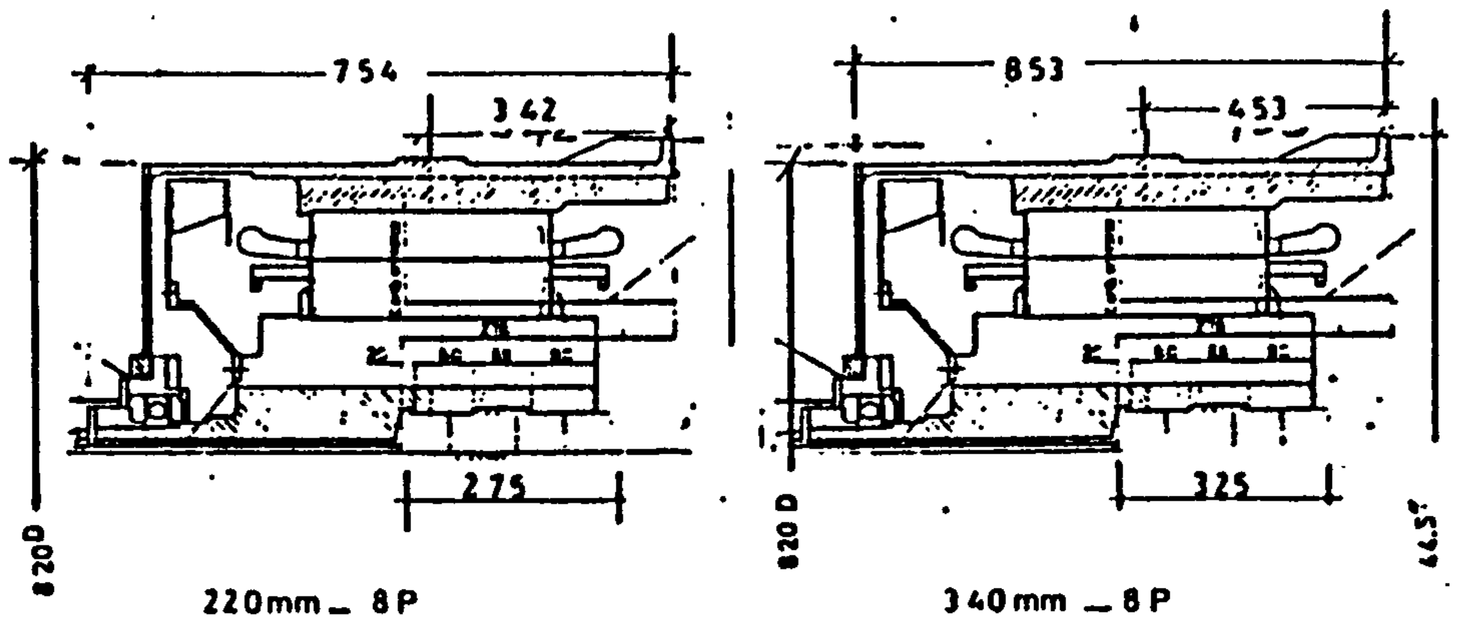 220mm _ 8P 260 mm _ 8P 340 mm _ 8P	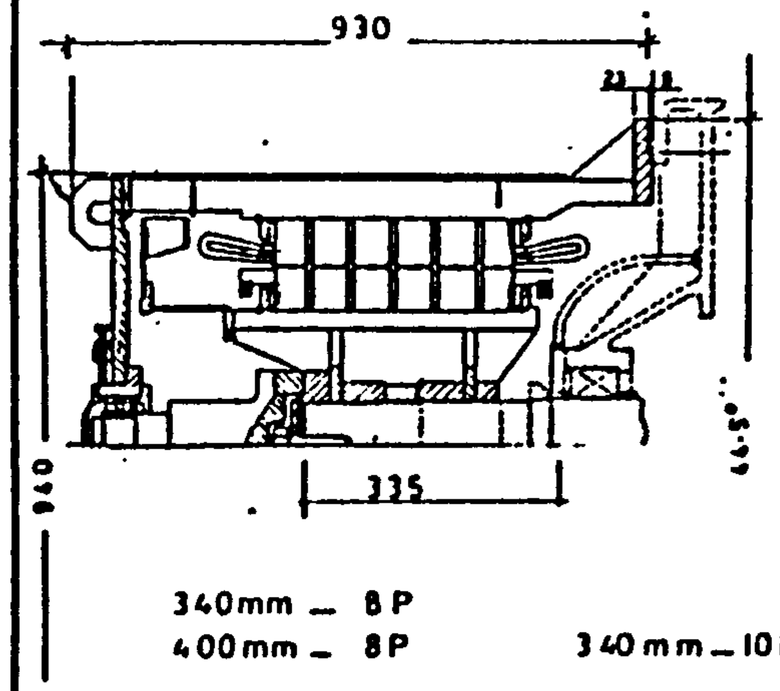 340mm _ 8P 400mm _ 8P 340 mm _ 10P
I N G	N.A	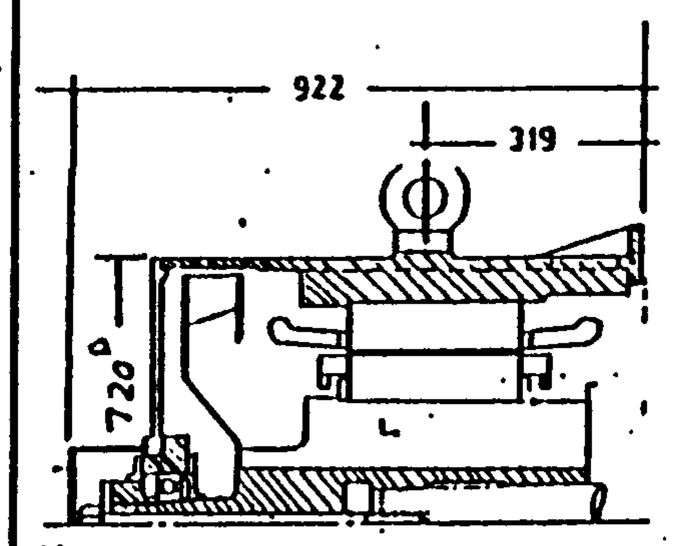 300 _ 8P	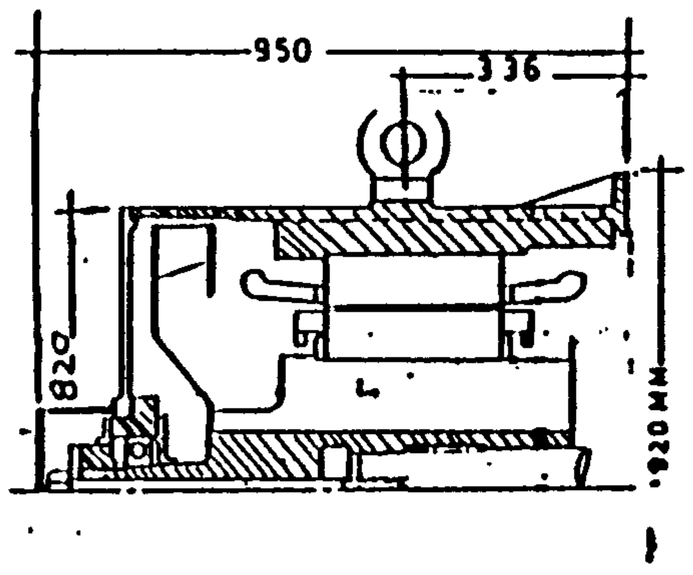 260 _ 8P 260 _ 10P	N.A

FIG.(6.7) SECOND GENERATION - S.C.R. STEADY BEARINGS MOTORS .

	H 10	H 11	H 12	H 13	H 14
COMPAIR	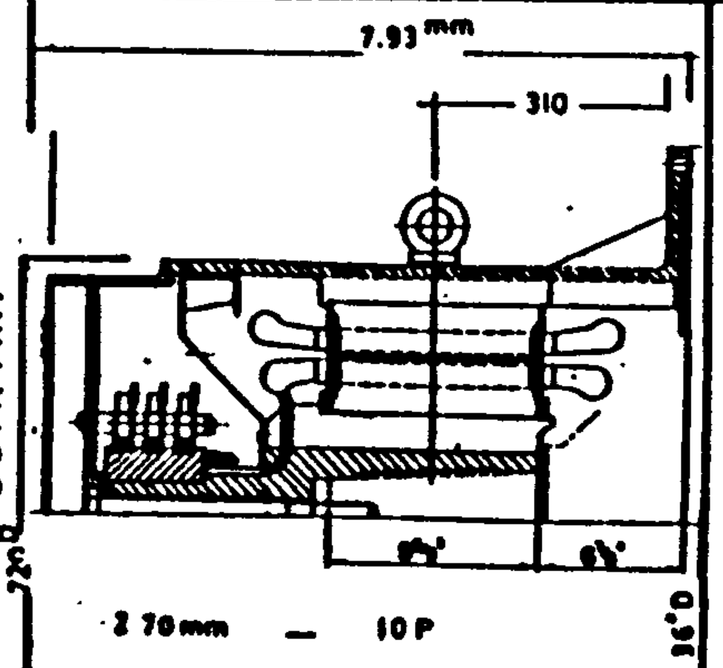	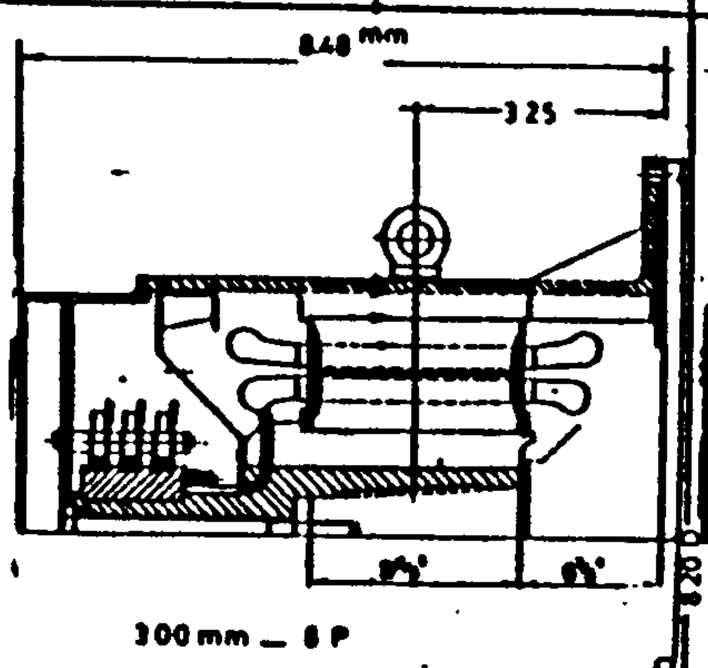	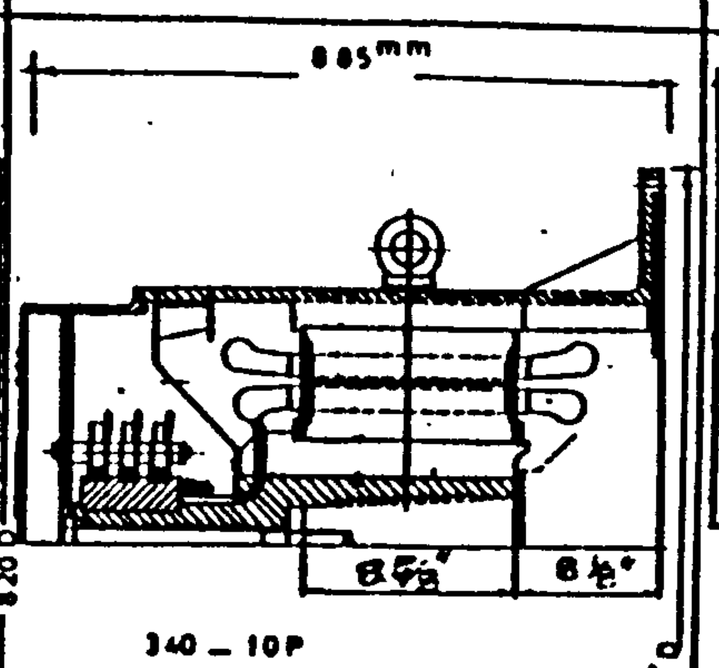	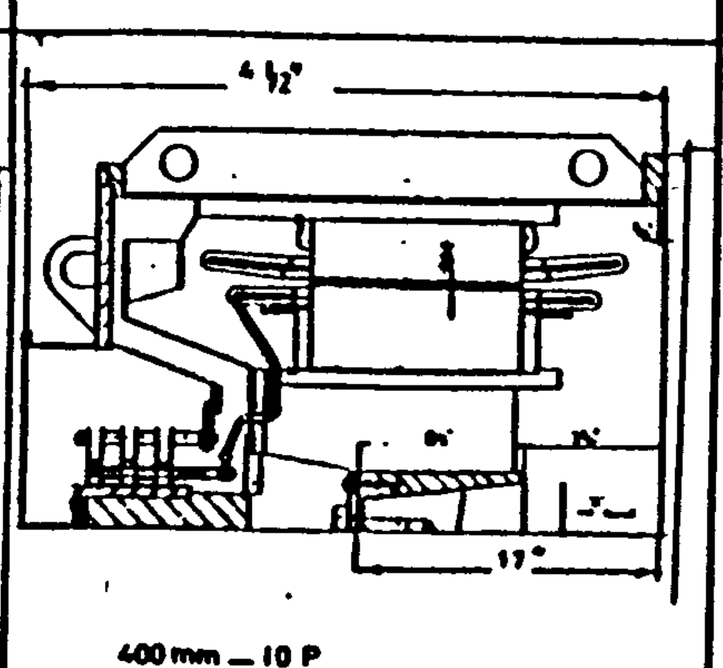	
B&M	N.A	N.A	N.A	N.A	N.A
ING	N.A	N.A	N.A	N.A	N.A

FIG 6.8 THIRD GENERTION SLIP RINGS/TAPER SHAFT - No. BRNGS

	H10	H11	H12	H13 & H14
COMPAIR		N.A	N.A	N.A
BELLISS & MORCOM		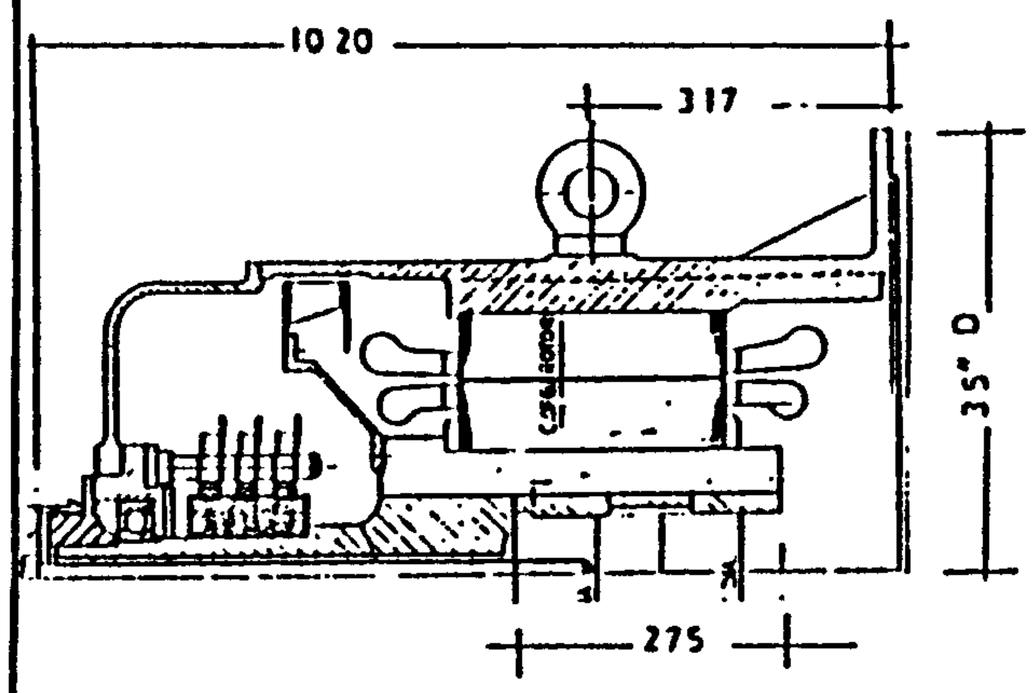 210mm _ 8 P	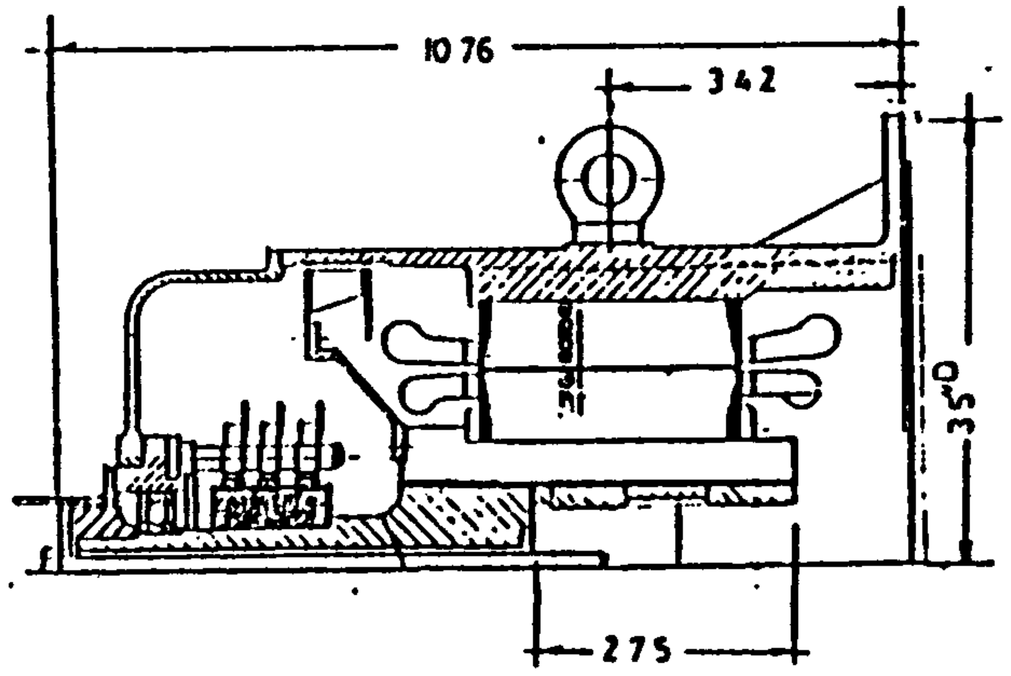 220mm _ 8 P 260mm 8P	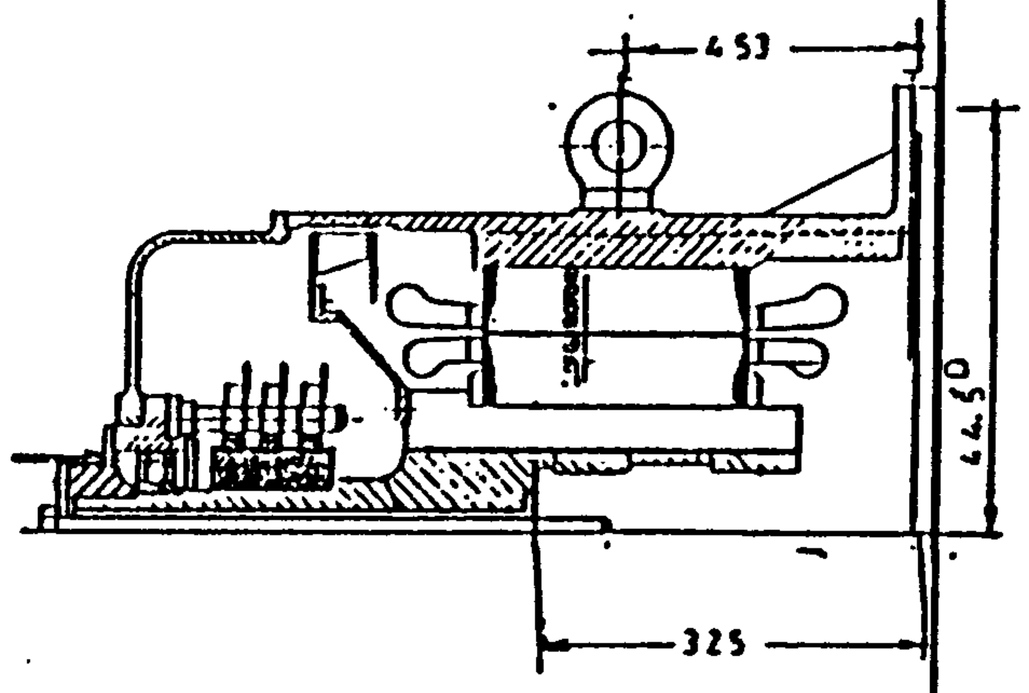 340mm_8P	N.A
ING		NIA	NIA	N.A

FIG 6.9 FOURTH GENERATION-SLIP RINGS/ STEADY BEARINGS MOTORS

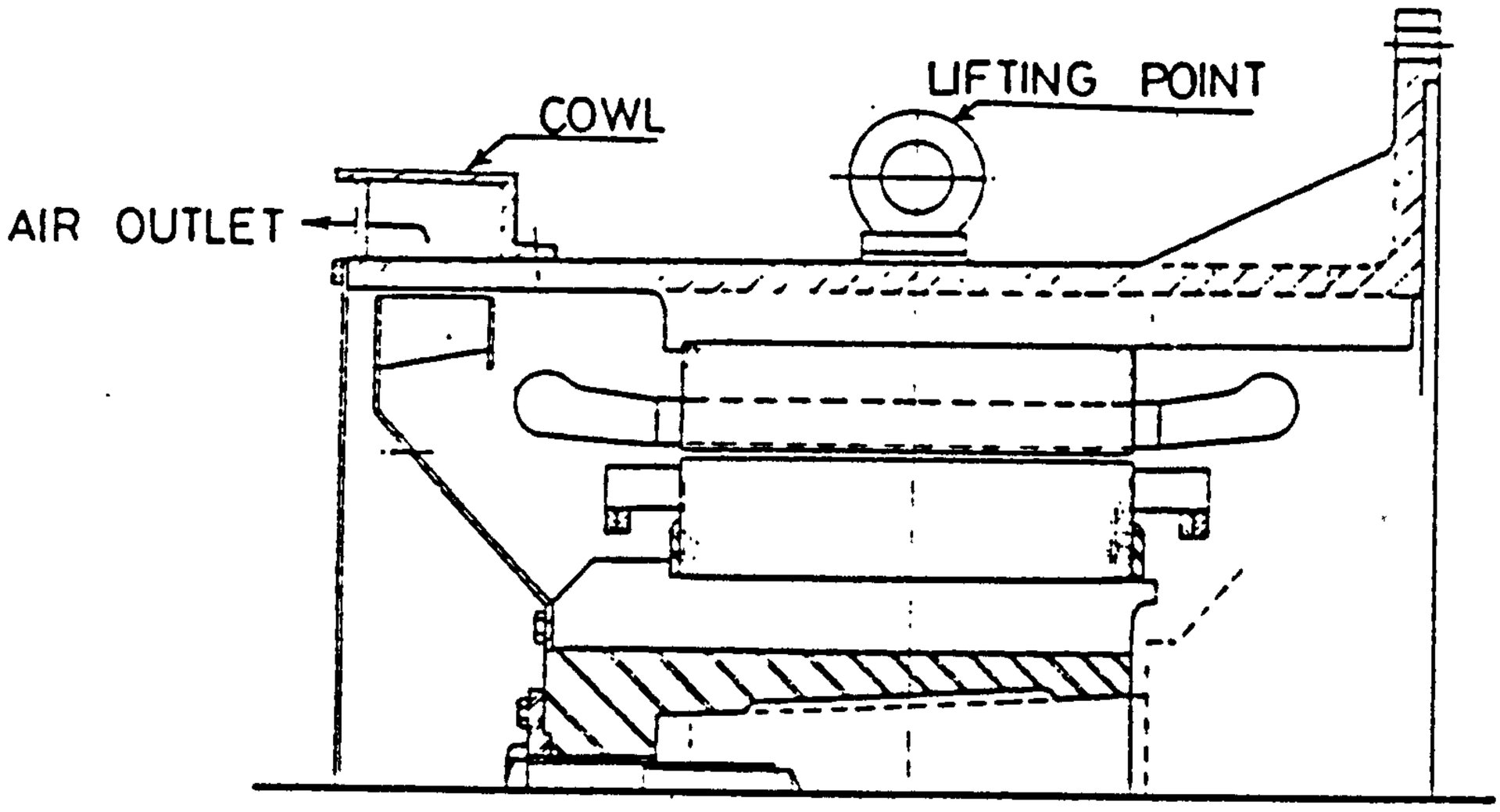

DRIP PROOF COWL ON H/10 Z FRAME

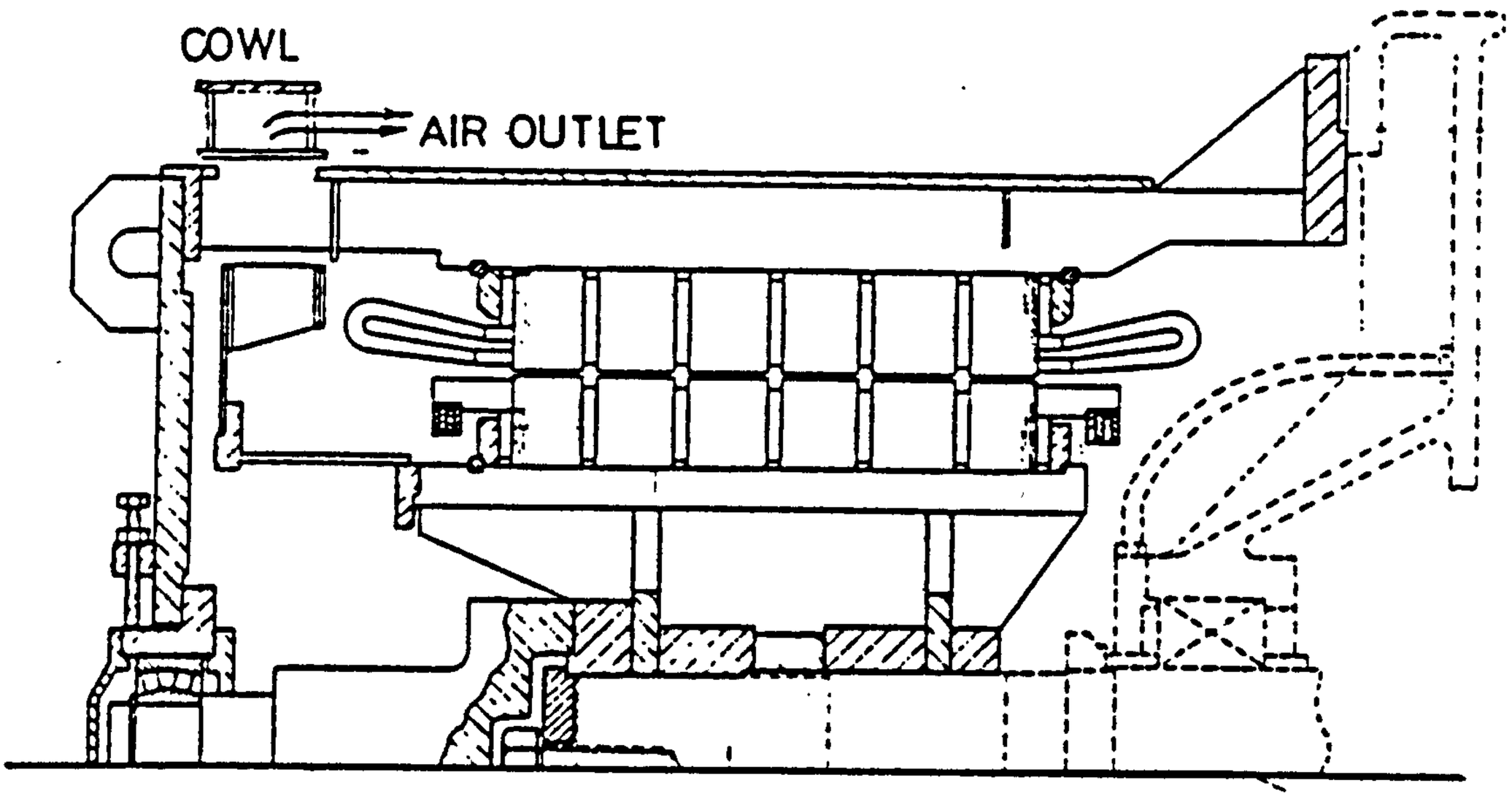

DRIPPROOF COWL ON H/13 Z FRAME

FIG.(6·10) NEW DESIGN ARRANGEMENTS FOR IMPROVED VENTILATION .

TABLE 6-11 COMPARABLE FRAME SIZES FOR THE COMPANY AND THE COMPETITION

COMPARABLE FRAME SIZE		No. POLES	OUTPUT		LIST PRICE	
S.Company	G.E.C.		S. Company	G.E.C.	S. Company	G.E.C.
H 10/270	C53C	8	95/130	95/140	2,283	£2,214
H 11/300	C60B	8	162/185	162/195	2,780	£2,430
H 12/260	C60D	8	186/225	196/225	3,399	£2,640
H 12/340	C75C	10	170/240	226/275	4.017	£4,000
H 13/340	C75F	10	241/280	276/300	4,573	£4,000
H 13/400	C75G	10	281/300	301/395	5,191	£4,540

H.P. RANGE	POLE	SPEED r.p.m.	COMPETITION FRAME SIZE
95-140	8	730	C53C
162-195	8	729	C60B

GENERAL SPECIFICATION

- OVERHUNG SHAFTLESS FLANCE MOUNTED CAGE MOTOR (S.C.R.)
- 3PH, 50 HZ, M.C.R.

TABLE 6-12 - GENERAL FUTURE REQUIREMENTS FOR COMPAIR LTD.

STATOR PACK	MAT. £	LAB. £	O.H. £	TOTAL £	%
STATOR FRAME	327	21	69	417	14
EYE BOLT	-	-	-	-	
STATOR KEY	-	-	-	-	
STATOR COREPLATES	289	-	-	289	10
PERFORATED PANEL (2)	2	5	18	25	.85%
PERFORATED PANEL (4)	-	9	30	39	1.33
TERMINAL LINK	-	.2	.60	0.8	
TERMINAL BASE	5.50			5.5	
TERMINAL BOX	7	2.5	8.5	18	0.6
TERMINAL BOX LID	9.5	.3	.71	10.5	0.35
GLAND PLATE	.75	.8	2.75	4.30	0.14
TERMINAL FACING COVER	4			4	
STATOR COPPER	132	-	-	132	4.5
INSULATION	-	-	-	-	
ENCLOSING GUARD	3	5	17	2 5	.85
WARNING PLATE	0.5	-	-	.5	
ADHESIVE	1.50	-	-	1.50	
COWLS	60	-	-	60	2.05
MISCELLANEOUS (10% MAT.)	85			85	2.9
GASKETS, BOLTS, INSULATION.					
PAINT		28	96	124	4.2
TOTAL	£ 926	£ 72	£ 242	£ 1240	42 %

ROTOR PACK	MAT. £	LAB. £	O.H. £	TOTAL	%
ROTOR HUB	135	30	100	265	9
ENDPLATES	28	4	12.50	44.5	1.52
FAN	16	10	34	60	2
KEY					
BAFFLE PLATE	.20	1.2	4	5.4	.18
HUB RETAINING PLATE	.50	2	6.75	9.25	.3
RETAINING SCREW	6.5	.25	.85	7.6	.26
COREPLATES	223			223	8
ROTOR BARS	37			37	1.3
END S.C. RINGS	12			12	.41
MISCELLANEOUS (10% MAT.) BOLTS & SCRAP.]	46			46	1.57
TOTAL	£ 504	£ 47	£ 158	£ 709	2 4%

TABLE (6.13a) -COMPONENTS COST BREAKDOWN(STATOR AND ROTOR)

STATOR ASSEMBLY	LAB. £	O.H. £	TOTAL £	%
BUILDING CORE PACK	2.7	9	11.7	.4
WIND COILS	7	23	30	1
PREPARE SLOT LINDERS	2.4	8.2	11	.38
WIND STATOR	34	115	149	5
CONNECT WINDING	25	83	108	3.7
FLASH TEST	1.8	6.0	7.8	.26
IMPREGNATE AND SHRINK CORE	10	34	44	1.5
FIT MESH GUARD	7	24	31	1
FIT COWLS	11	38	49	1.6
FIT TERMINAL BLOCK AND CONNECT TERMINALS	3	10	13	.44
PAPER UP FOR BORING	2.5	8.5	11	.37
BORE CORE AND SPIGGOT	6	20	26	.88
REMOVE PAPER	0.85	2.8	3.65	.12
TOTAL	£ 113	£ 381	£ 494	16.4%

ROTOR ASSEMBLY	LAB. £	O.H. £	TOTAL £	%
DRESS AND FIT ENDRINGS AND MAKE CORE KEYS	1.6	5.4	7	.24
BUILD CORE AND FIT ENDRING, KEYS	3	10	13	.44
WELD KEYS	1.5	5	6.5	.22
FIT FAN BAFFLE	1.6	5.4	7	.24
CUT ROTOR BARS	0.6	2	2.6	
CUT AND ROLL S.C. RINGS	0.7	2.3	3	
WIND ROTOR	1	3.4	4.4	
BRAZING BAR	2	6.5	8.5	.3
TURN O/D AND FINISH RECESS.	29	98	127	4.3
CLEAN AND FILE	3.6	12	15.6	.53
FIT BALANCING MANDREL	0.9	3	3.9	.28
FIT FAN AND BALANCE	15	50	65	2.2
PAINT WINDINGS	1.9	6.5	8.4	.29
REMOVE BALANCING MANDREL	1	3.4	4.4	.15
TOTAL	£63	£213	£276	9.4%

MOTOR TESTING				
RING AND MOTOR ASSEMBLY	35	115	150	
MOTOR TEST	30	100	130	
ASS. AND TEST	£ 65	£215	£280	9.4%

TABLE(6.13b) -ASSEMBLY AND TEST COST BREAKDOWN

No.	Part	No Off	Material	Method & Place of Manufacturing.
	Stator Assembly			
1.	Stator Frame*	1	Cast Iron	Cast in the foundry - machined in the works.
2.	Panel (A) *	4	Mild Steel	S.W.G. strips spot weld to weld mesh - Works.
3.	Panel (B) *	2	Mild Steel	" " " " " " "
4.	Guard *	1	Sheet Steel	Fabricated and finished in the works.
5.	Cowl	1	" "	Fabricated and finished in the works.
6.	Key	1	Mild Steel	Machined - works.
7.	Core Plates*	300 B.E.P	Sheet Steel	Sub-contracted - Finished.
8.	Stator Windings	-	Copper Coils	Bought-out
9.	Insulation Matl.	-	Paper	Bought-out.
10.	Terminal Block.	1		Bought-out.
11.	" Bo x	1	Cast Iron	Cast in the foundry - Machined in the works.
12.	T.Box Lid	1	Cast Iron	" " " " " " "
13.	Gland Plate	1	Mild Steel	Machined in the works.
14.	Term.facing cover*	1	Mild Steel	" " " "
	ROTOR ASSEMBLY			
1.	Hub *	1	Cast Iron	Cast in the foundry - machined in the works.
2.	Retaining Plate*	1	Cast Iron	" " " " " " " "
3.	Ret.Screw*	1	Mild Steel	Screw cut from hexagon bar - works.
4.	Key	1	Mild Steel	Machined - works
5.	End Plates*	2	Mild Steel	Machined - works.
6.	Fan *	1	Mild Steel	Fabricated - works.
7.	Core Plates*	300 B.E.P	Sheet Steel	Sub-contracted - finished.
8.	Rotor Bars	-	Copper	Bought-out - cut in the works
9.	S.C.Rings	-	Copper	Bought out - cut and rolled in the works
10.	Air Baffle*	1	Sheet Steel	Rolled - works.
	ASSEMBLY & TEST			Motor is assembled and tested in the works

TABLE (6.14) LIST OF PARTS

* PARTS ESPECIALLY STOCKED PREVIOUS TO MANUFACTURING STAGE

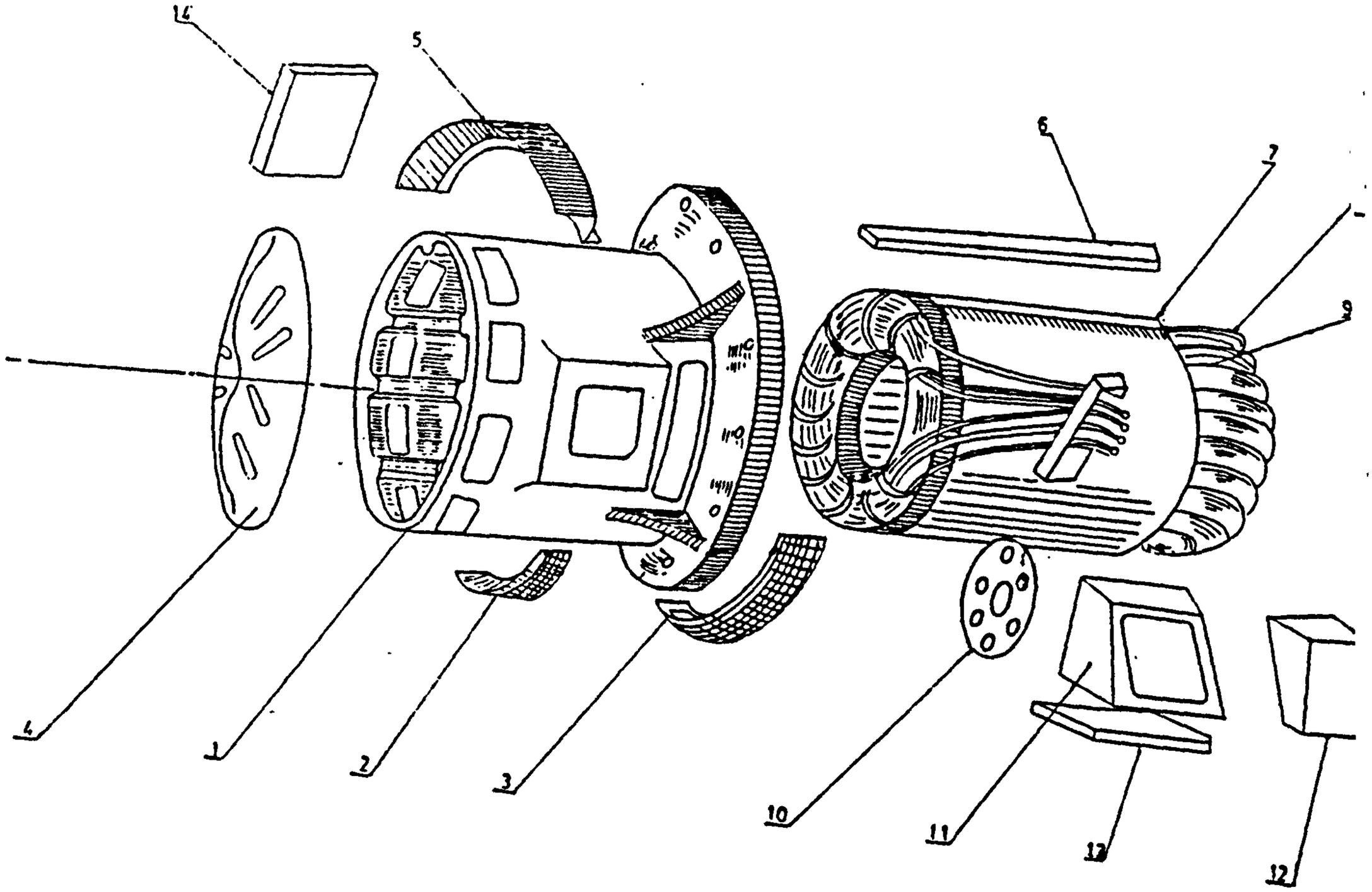

STATOR ASSEMBLY

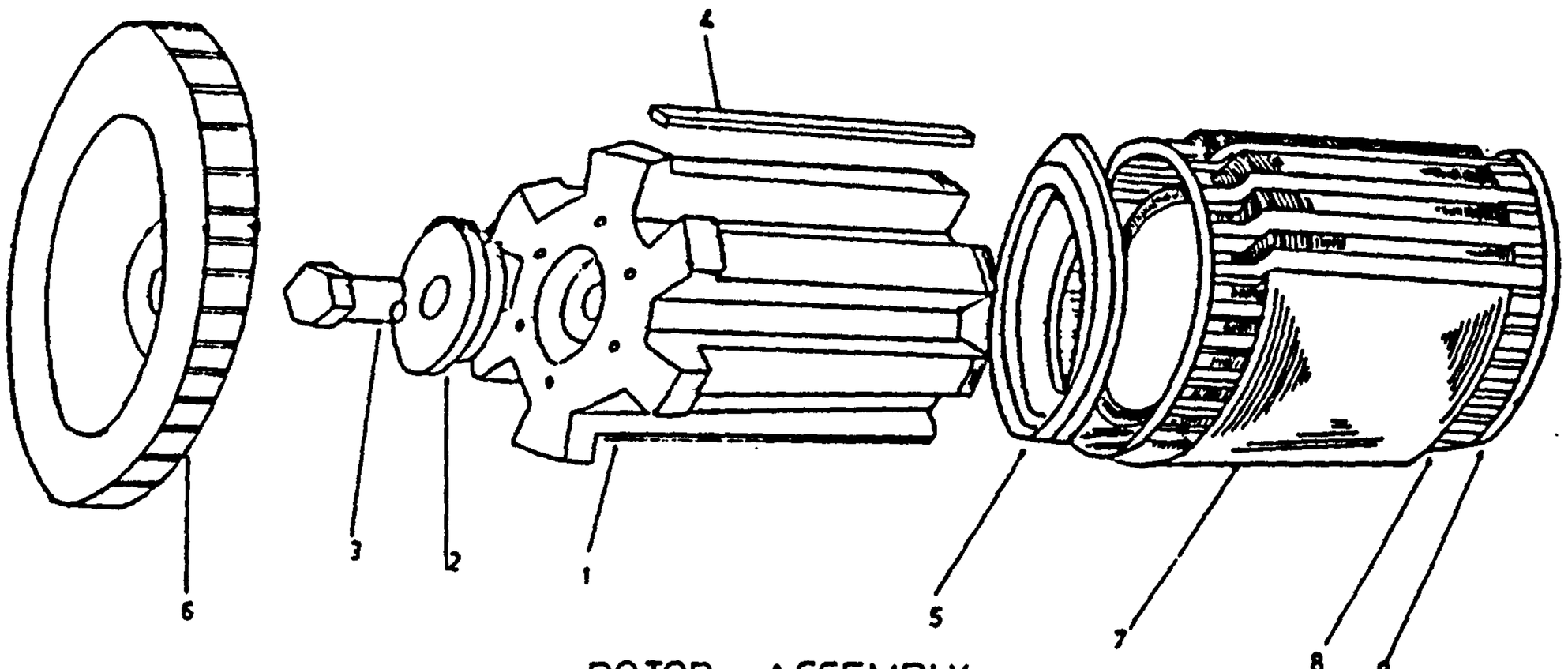

ROTOR ASSEMBLY

FIG.(6·15) EXPLODED VIEW OF OVERHUNG MOTOR H 10, H 11, H 12 -FIRST GENERATION.

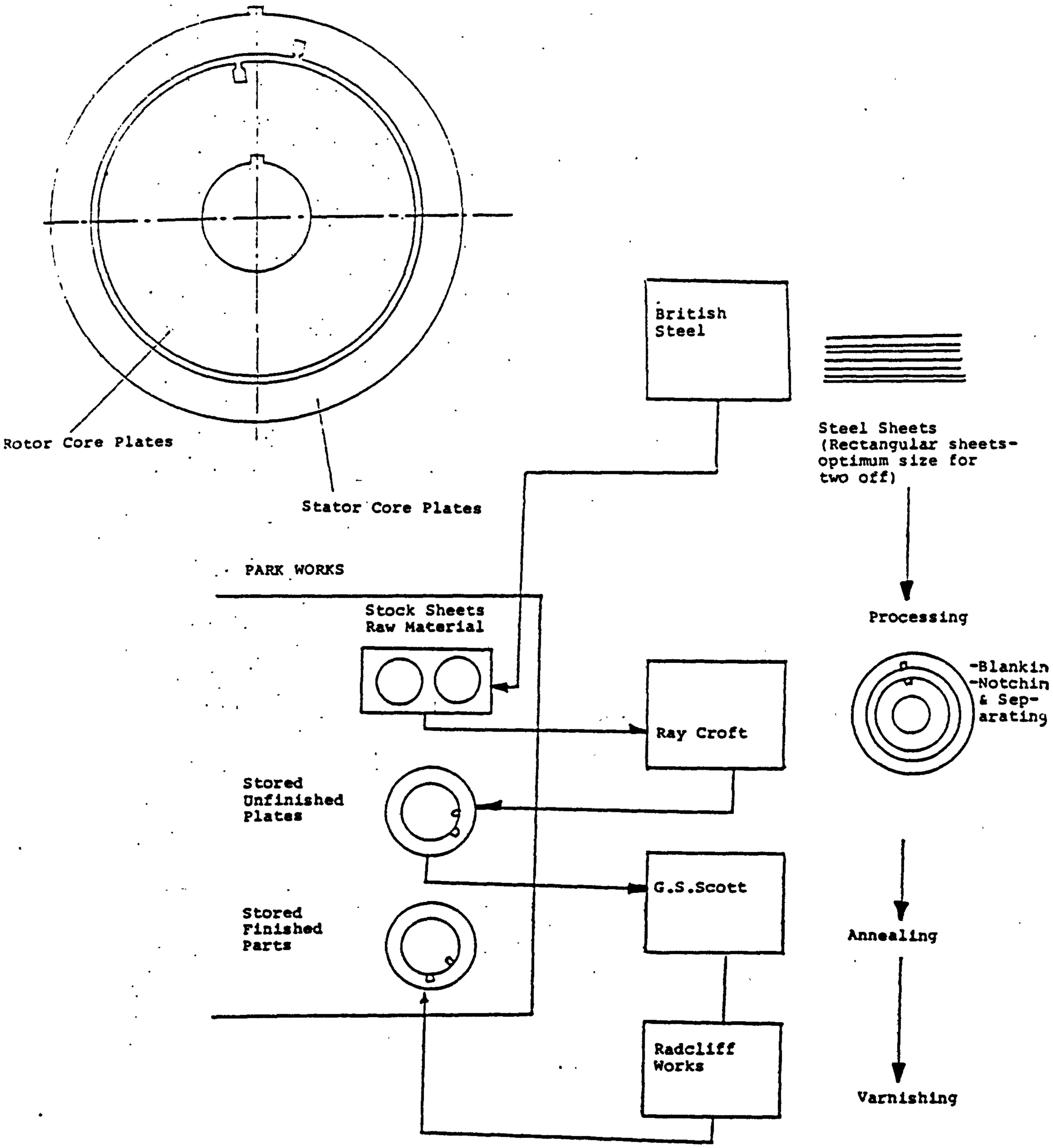

FIG.(6·16) PROCESSING OF STATOR & ROTOR CORE PLATES (STAGES & PLACES OF MANUFACTURE).

OPN NO	OPERATION	MACHINE	DESCRIPTION
-	Obtain cast from the Stores	-	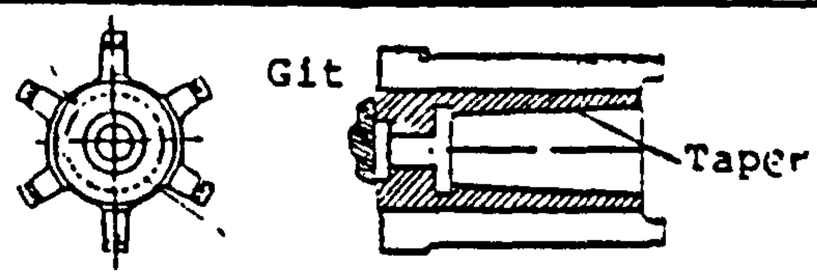
1	Mill off Git	Horizontal - Milling Machine	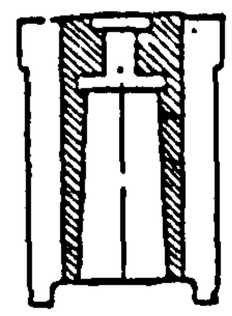
2	Rough bore fin face & turn	Centre Lathe	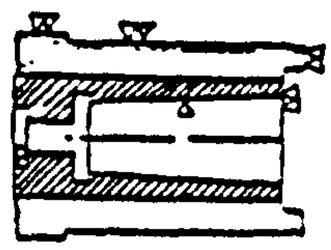
3	Finish Taper bore Inspection	Vertical Borer	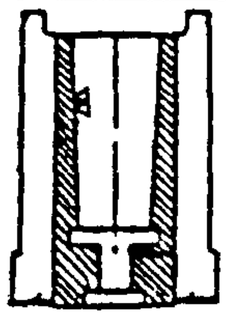
4	Mark-out including keyways	Work bench	
5	Drill & tap complete	Drill	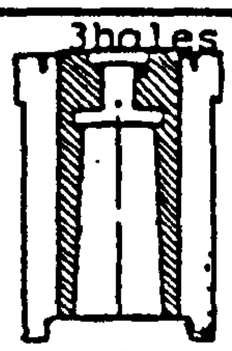
6	Mill outside Keyways	Vertical Milling Machine	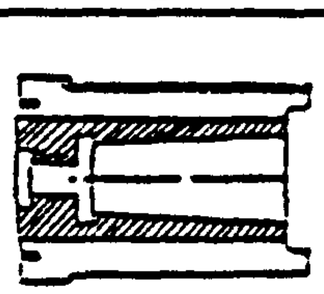
7	Plane Internal Key	Horizontal Planer	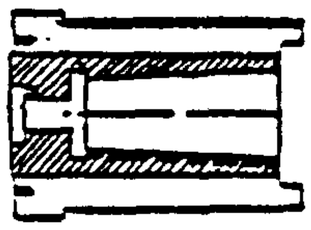
8	Dress keyway, fit and bed bore gauge	EL Stock Bench	
-	Send to store.		

FIG.(6·17) SEQUENCE OF MACHINING ROTOR HUB .

OPER NO	OPERATION	MACHINE	DESCRIPTION
+	Obtain casting & stress relief	-	-
1	Finish bore Rough Turn face and recess. Inspection	Vertical Borer	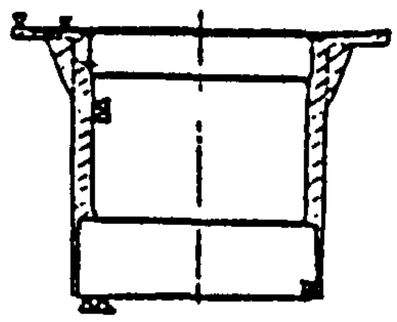
2	Mill Terminal Face.	Horizontal mill Mach8ne.	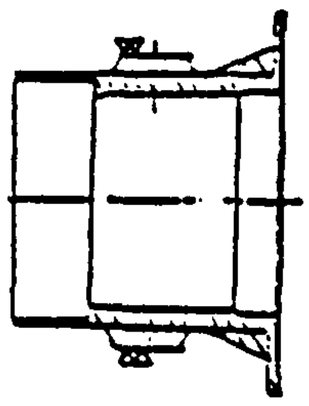
3	Mark out complete	Bench	
4	Drill, tap and spot face complete.	Drill	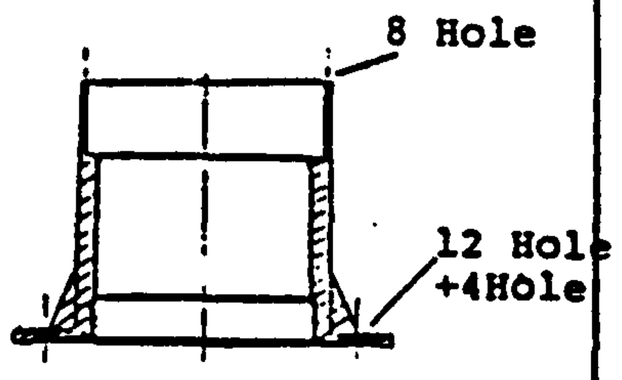
5	Plane int. key	Horizontal Planer	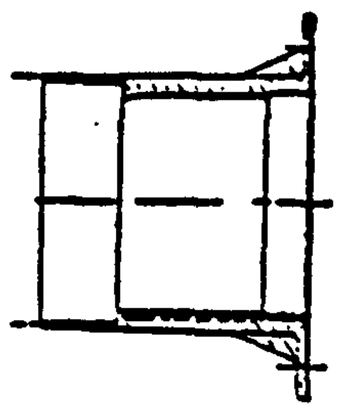

FIG(6.18) SEQUENCE OF MACHINING STATOR FRAME

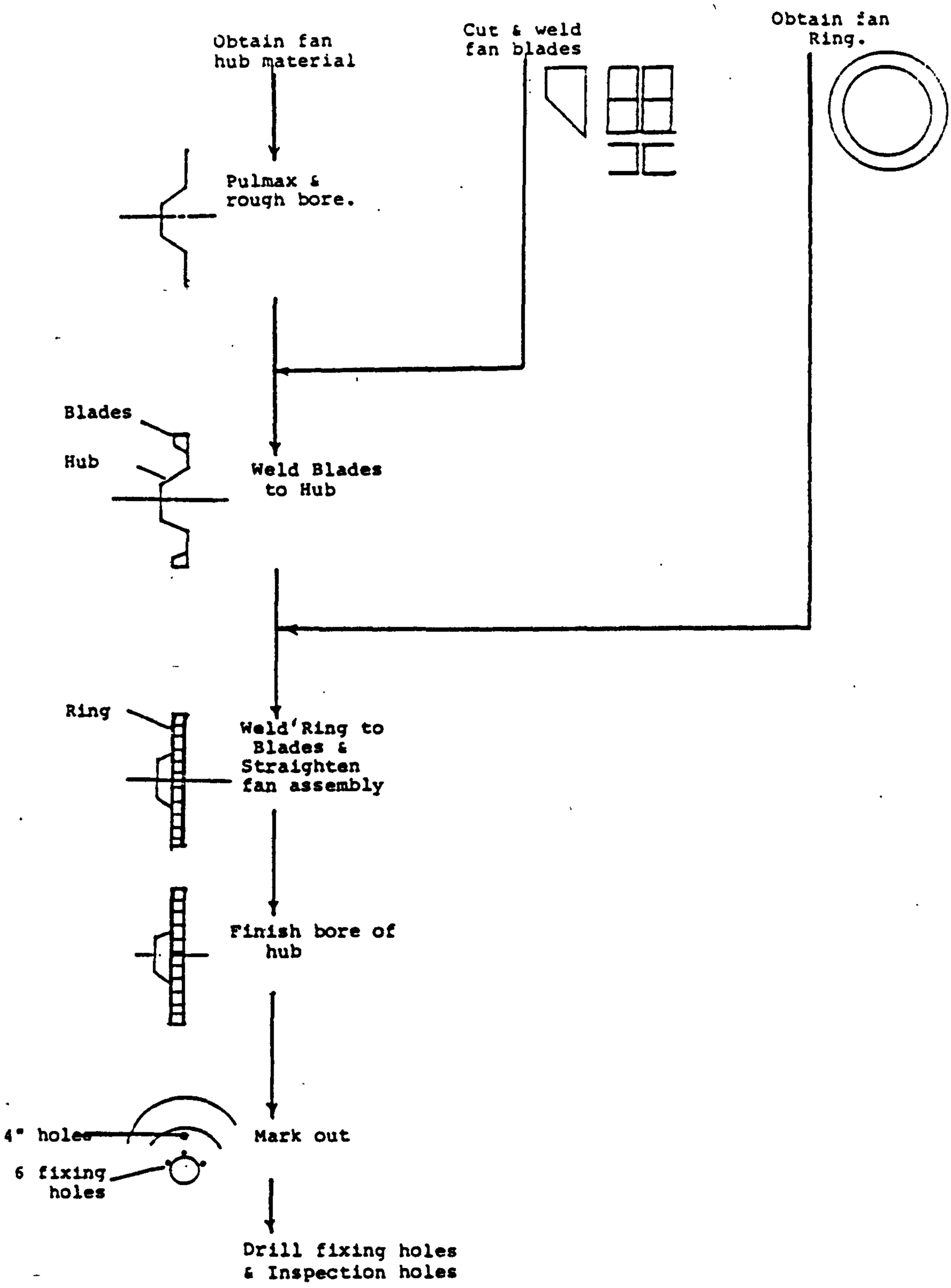

FIG.(6·19) SEQUENCE OF MANUFACTURING THE FAN .

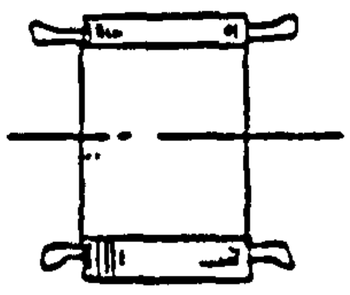

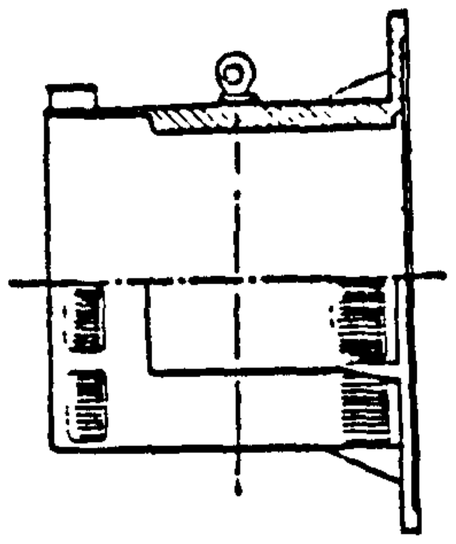

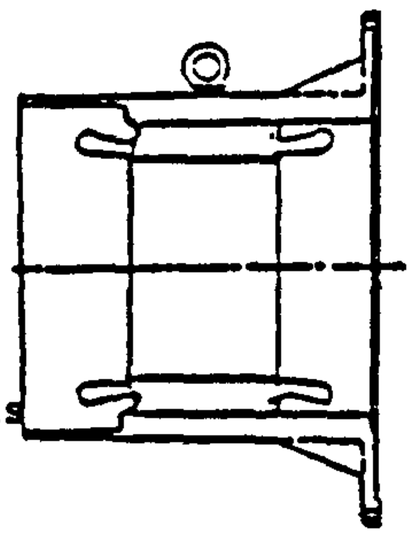

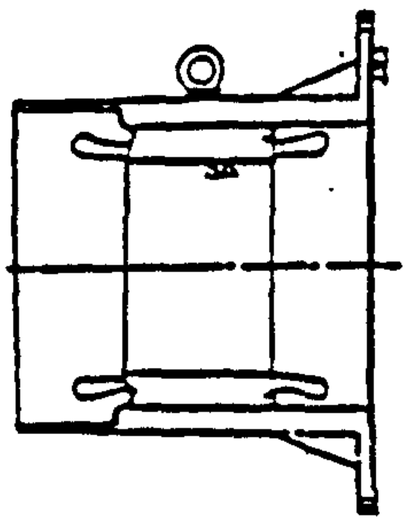

Obtain Terminal block

Wind coils

Prepare slot Liners

Build Core

Obtain Stator-Frame

Fit mesh guard

Wind Stator

Connect windings

Flash test

Impregnate

Shrink core pack to frame

Fit T.Block & connect Terminals

Paper up for boring

Bore core & finish recess

Remove paper

Goes to assembly and test.

FIG.(6·20) SEQUENCE OF STATOR ASSEMBLING .

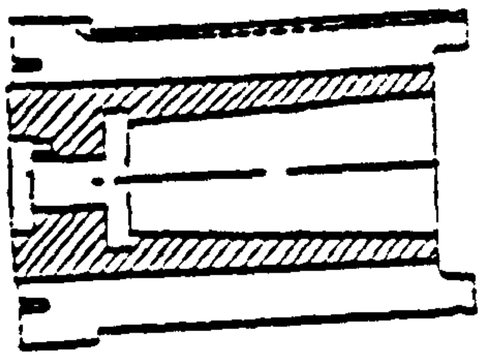

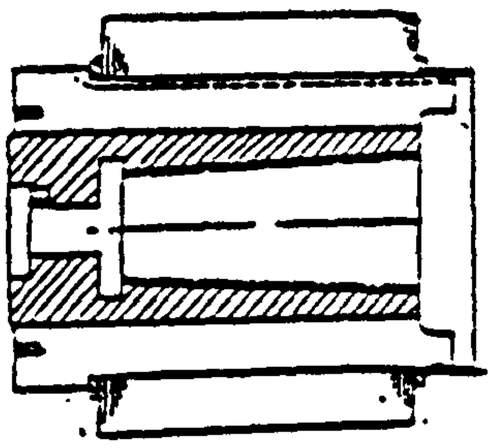

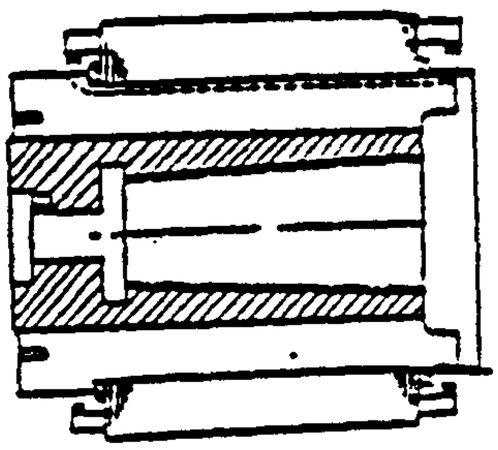

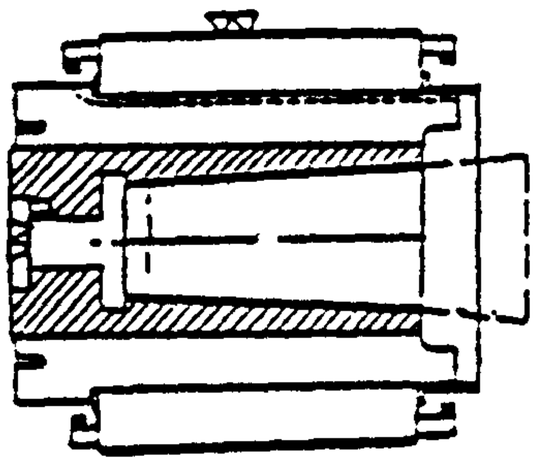

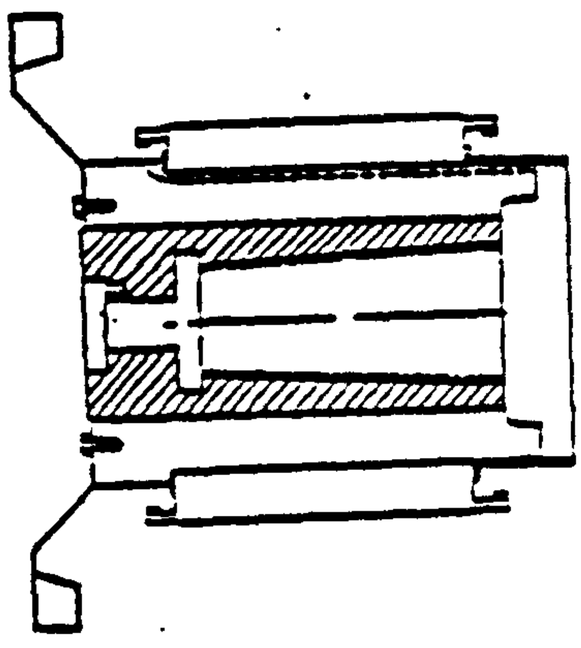

Obtain hub

Obtain Coreplates

Dress end plates & make core key

Obtain arm keys & air baffle

Cut & roll SCR Rings

Cut rotor bars

Build core onto hub and fit end plates & key.

Weld keys and fit air baffle

Wind Rotor

Braze bars

Turn o/d and finish recess

(USING A STUB SHAFT)

Clean & file

Fit balancing Mandrel

Fit fan & balance

Paint windings

Remove balancing mandrel & remove fan

Goes to assembly and test.

Obtain Fan

FIG.(6·21) SEQUENCE OF ASSEMBLING ROTOR .

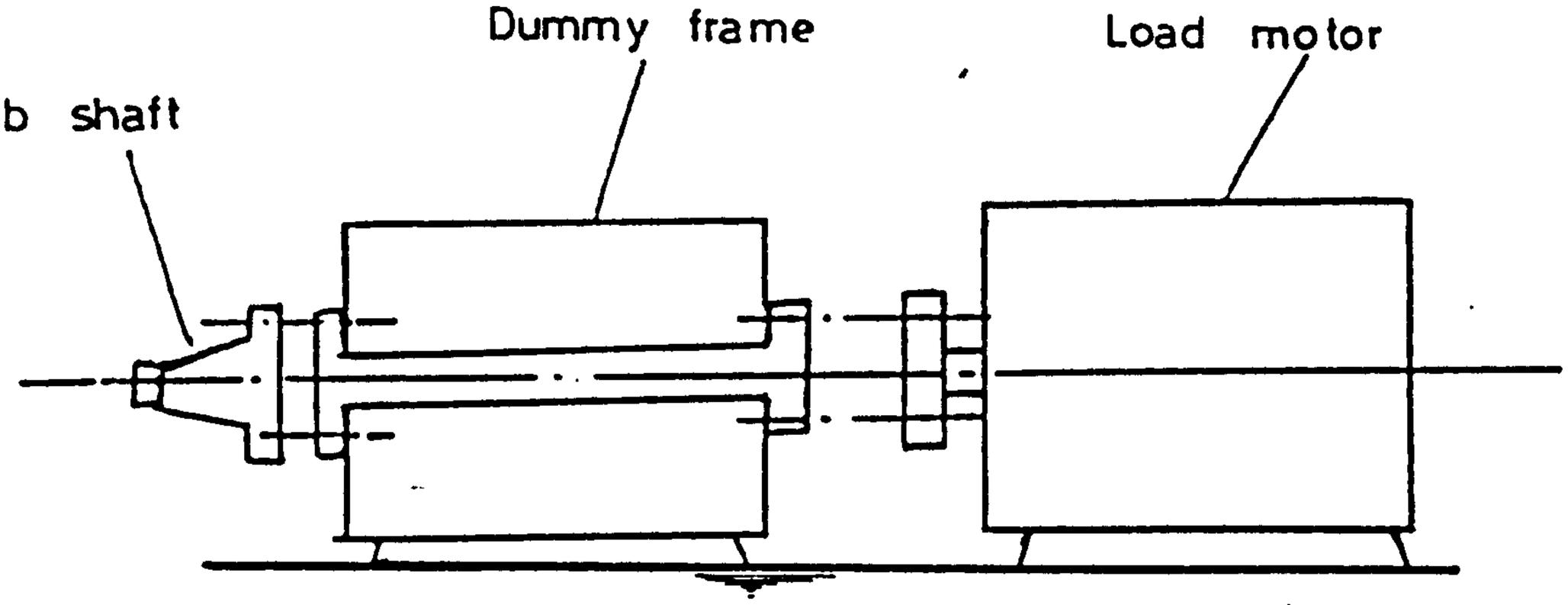

FIG.(6·22) MOTOR TEST

MAJOR	FINISHED	RAW MAT	OPERATION	MATERIALS CASTING / STEEL	MATERIALS B.O.	LABOUR	OVER HEADS	TOTAL OPER:	COMULATIVE COST/FIN.	COST OF MAJOR ASSEMBLY OPER	TOTAL COST/ COST/ASSEMBLY.
STATOR MECHANICAL PARTS	machined casting of s.frame	stator casting	machine castings	327	---	21	69	90	417		
	perf. panels(6)	S.W.G. strips	weld mesh		2	14	48	62	64		
	cowl				60	---	---	---	60		
	enclosing guard	sheet steel	fabricatings steel	3		5	17	22	25		
	term.facing cover			4					4		
	term.link			---		0.20	0.60	0.80	0.80		
	term.base				5.5	---	---	---	5.5		
	term.box	castong	machining casting	7		2.5	8.5	11	18		
	term.box lid	casting	machine casting	9.5		.30	.70	1.0	10.5		
	gland plate	steel	machining	75		.8	2.75	3.55	4.30		
	key eye bult								--- ---		
	paint					28	96	124	124		
	warning plate				.5				.5		
	misc. (gaskets bults)10%				57				56.4		
TOTAL STATOR MECHANICAL PARTS				351	125			314		790	
ASSEMBLING STATOR MECHANICAL PARTS			fit mesh guard/ process			7	24	31			
			fit cowls			11	38	49			
			fit term block&connect terminal			3	10	13			
TOTAL OPERATION COSTS FOR ASSEMBLING STATOR MECHANICAL PARTS										93	
STATOR ELECTRICAL PARTS	stator core plates				289				289		
	stator copper				132				132		
	miscelenous (insulation) etc.10%						29		29		
TOTAL STATOR ELECTRICAL PARTS UN ASSEMBLED										450	
		building core pack				2.7	9	11.7			
		wind coils				7	23	30			
		prepare slot liners				2.4	8.2	11			
		wind stator				34	115	149			
		connect winding				25	83	108			
		flash test				1.8	6.0	7.8			
TOTAL COST OF BUILDING STATOR CORE PACK										317	
		impregnate & shrink core				10	34	44			
		paper up for boring				2.5	8.5	11			
		bore core & spigot				6	20	25			
		remove paper				0.85	2.8	3.65			
TOTAL COST OF FITTING STATOR CORE PACK INTO STATOR FRAME										84.65	
TOTAL COST OF THE STATOR FRAME										£ 1657.05	

TABLE (6.23a) DETAILED COST BREAK DOWN FOR THE MOTOR PARTS.

TABLE (6.23b) DETAILED COST BREAK DOWN FOR THE MOTOR PARTS .

MAJOR ASSEMBLY	FINDING PARTS	RAW MAT	OPERATION	MATERIALS COSTS		LABOUR COST	O.H.	TOTAL OPERAT.	COMULATIVE COST TFINI. PART	COST OF MAJOR ASSEMBLY/OPERAT.
				CASTING STEEL	B.O					
ROTOR MECHANICAL PARTS	ROTOR HUB FIN .MACH.	CASTING	MACHINE CAST	135		30	100	130	265	
	END PLATES	MILD STEEL	MACHINE CAST	28		4	12.50	16.5	44.5	
	RET.PLATE	CASTING	MACHINE CAST	0.5		2	7	9	9.5	
	RET. SCREW	MILD STEEL	MACHINING	6.5		.25	.85	1.1	7.6	
	FAN	MILD STEEL	FABRICATION	16		10	34	44	60	
	BUFFLE PLATE	SHEET STEEL	FABRICATION	0.2		1.2	4	5.2	5.4	
	MISC.			186.2			27.0		27	
TOTAL	ROTOR	MECHANICAL	PARTS	UNASSEMBLED				232.8		419 (14%)
ROTOR ELECTRICAL PARTS	CORE PLATES				223				223	
	ROTOR BARS				37				37	
	END RINGS				12				12	
	MISC.						18		18	
TOTAL	ROTOR	ELECTRICAL	PARTS	UNASSEMBLED						290 (96%)
BUILDING ROTOR PACK			DRESS&FIT END RINGS AND MAKE CORE KEYS			1.6	5.4	7		
			BUILD CORE END RONGS & KEYS			3	10	13		
			WELD KEYS			1.5	5	6.5		
			FIT FAN BAFFLE			1.6	5.4	7		
			CUT ROTOR BARS			0.6	2	2.6		
			CUT & ROLL S.C.RINGS			0.7	2.3	3		
			WIND ROTOR			1	3.4	4.4		
			BRAZING BAR			2	6.5	8.5		
			TURN O/D AND FINISH RECESS			29	98	127		
			CLEARANCE			3.6	2	15.6		
			FIT BALANCING MANDRELL			0.9	3	3.9		
			FIT FAN & BALANCE			15	50	65		
			PAINT WIND			1.9	6.5	8.4		
			REMOVE BALANCE MANDRELL			1	3.4	4.4		
TOTAL	COST	OF	BUILDING	ROTOR	PACK					276 (9.2%)
MOTOR TESTING			RIG & MOTOR ASSEMBLY			35	11.5	150		
			MOTOR TEST			30	100	130		
TOTAL	FOR	TESTING	MOTOR							280 (9.3%)

TABLE (6.23b) DETAILED COST BREAK DOWN FOR MOTOR PARTS

			MATERIAL COST £		PROCESSING COST	ASSEMBLY COST	S/TOTAL		
		ELEMENT OF COST	MECH.	ACTIVE				%AGE	TOTAL %AGE
STATOR PACK	building stator frame	MECHANICAL PARTS (MAT)	£ 476	--					
		PROCESSING PARTS (MACHINING ..ETC)			£ 314		£ 884	29.5%	
		ASSEMBLING ALL PARTS				£ 93			
	core pack	CORE PLATES(MAT)		£ 289					
		COPPER&OTHERS		£ 160			£ 766	25.6%	£ 1736
		BUILDING &WINDING PACK				£317			57.9%
	fitting pack to frame					£ 85	£ 85	2.8%	
ROTOR PACK	mechan. parts	CASING ..ETC	£ 186						
		MACHINEING CASTINGS ...ETC.			£ 233		£ 419	14%	
	electric parts	CORE PLATES		£ 223			£ 290	9.6%	£ 985
		COPPER ..ETC		£ 57					
	Building pack						£ 276	9.2%	32.8%
TEST		RIG & MOTOR ASSEMBLY				£ 150	£ 150	49%	£ 280
		MOTOR TEST				£ 130	£ 130	4.4%	9.3%

TABLE 6.24 TOTAL £3000

COST AREA		COST	%AGE	
ACTIVE MATERIAL	CORE PLATES (STATOR & ROTOR)	£ 512.00	(3) 17%	24%
	STATOR COPPER	£ 160.00	(6) 5.3%	
	ROTOR COPPER	£ 67.00	(7) 2.2%	
STATOR ASSEMBLY	OBTAINING & BUILDING STATOR FRAME (INCL ALL PARTS)	£ 884.00	29.5%	42.9%
	BUILDING & WINDING PACK (AND) FITTING PACK INTO FRAME	£ 402.00	(4) 13.4%	
ROTOR ASSEMBLY	OBTAINING & PROCESSING PROCESSING ALL ROTOR MECH. PARTS AND BUILDING ROTOR PACK	£ 695.00	(2) 23.3%	23.3%
MOTOR TESTING	TESTING OF MOTOR	£ 280.00	(5) ~ 9.3%	9.3%
TOTAL COST OF BUILDING MOTOR		£3000	100 %	

TABLE(6.2S) _ THE REDISTRIBUTION OF MOTOR TOTAL MANUFACTURING COSTS INTO MEANINGFUL AREAS FOR FURTHER ANALYSIS

FIG. (6.26) LIST OF MOTOR HIGH COST AREAS IN DESCENDING ORDER.

NO.	OVERALL COST	DETAILS OF	TOTAL COST	% AGE
1	obtaining & building stator frame(incl all parts)	- obtaining & machining frame - " & fitting mesh guards - " & fitting cowls - " & fitting gland plate - " & fitting warning plate - " & fitting terminal assembly - painting frame	£ 884.00	29.5%
2	obtaining & processing all rotor mechanical parts & building rotor pack	- obtaining & machine rotor hub - obtain & machine end plates - obtain & machine ret.plates - obtain parts & fabricate fan - obtain pars & fabricate baffle plate --- - complete build core pack into rotor hub - wind rotor & paint - turn O/D and finish recess - balance rotor	£ 695.00	23.3%
3	stator & rotor core plates	bought -out items	£ 512.00	17 %
4	"building & winding stator pack" and fitting pack into frame	-Building core pack - wind coils - wind stator, connect winding -flash test. --- - impregnate & shting core - bore core & spigot	£ 402.00	13.4%
5	stator copper (windings)	bought -out item	£ 160.00	5.3%
6	rotor copper (bars)	bought-out item	£ 67.00	2.2%
	TOTAL COST OF BUILDING MOTOR		£ 2720.00	90.7%
7	testing the motor	- assembling rig & motor - test motor	£ 280	9.3%
TOTAL COST OF PRODUCING THE MOTOR			£ 3000	100%

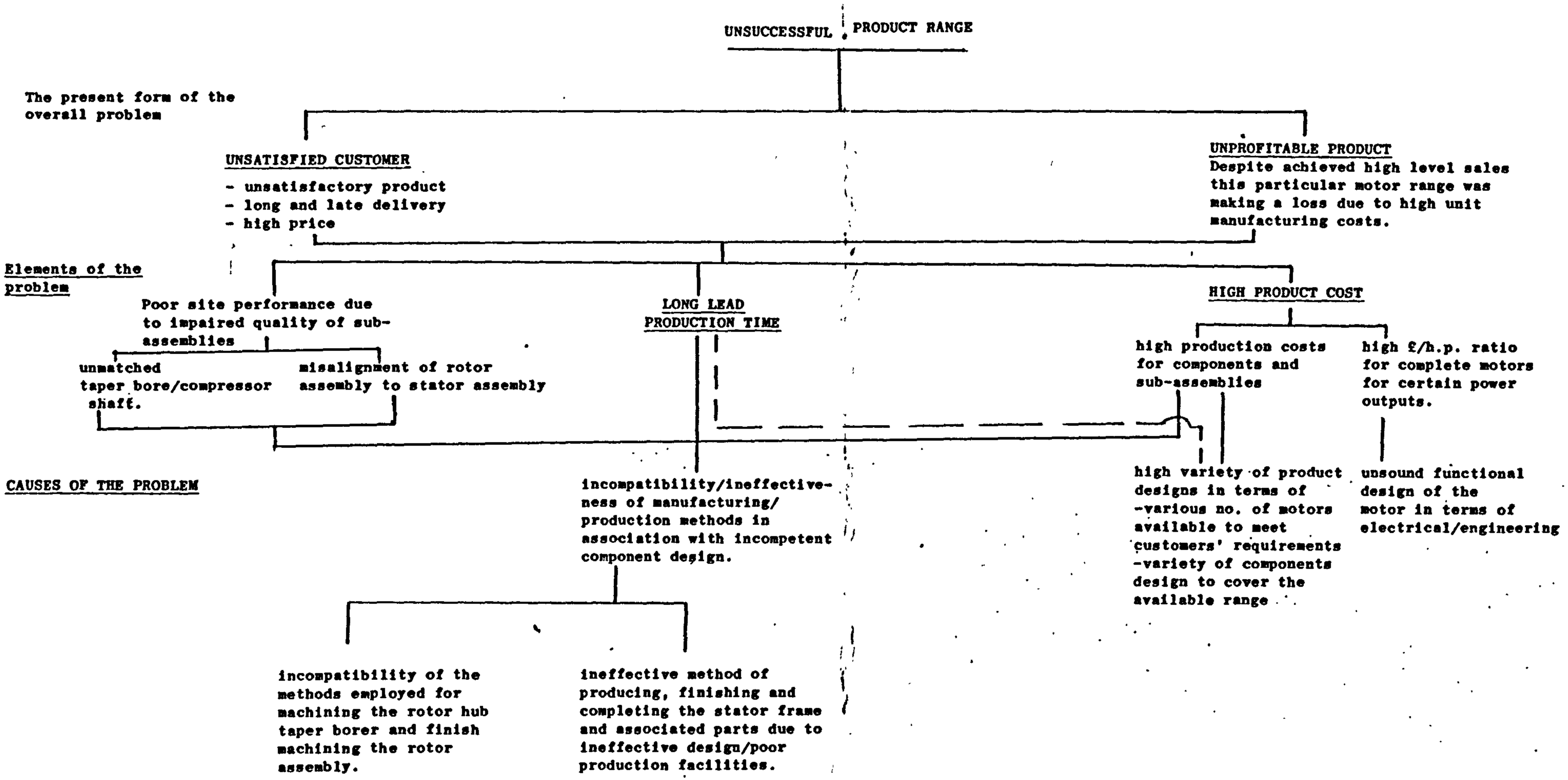

FIG.(6.27) ANALYSIS OF OVERALL PROBLEM

ACHIEVING A SUCCESSFUL PRODUCT TO RESUME BUSINESS.

ULTIMATE OBJECTIVES

Satisfying customers' requirements in terms of supplying motors:
- technically soun
- at reasonable delivery time
- at prices to match competition

Achieving Reasonable return on capital investment or reasonable overhead recovery.

IMMEDIATE OBJECTIVES/ REQUIRED ACTIONS

Achieving an improved way of manufacturing/designing individual components/sub-assemblies with the objective of improving quality of the produced parts, reducing manufacturing costs and minimising production time.

Optimising the motor Functional/Engineering/Industrial design to obtain highest possible power output for given active materials/ mechanical parts in order to minimise £/H.P. ration to match competition

Achieving a high level of product/ component standardisation to limit number of motors required to meet customers' requirements, and number of components required to cover the range.

REQUIRED TASKS OF ORGANISATION FUNCTIONS TO ACHIEVE OBJECTIVES

MARKETING FUNCTION TASK

Establishing accurate market requirements

Establish customer requirements

- to establish for each customer, no. compressors to be covered by the motor range) with their physical dimensions
- favourable output powers for each compressor

Establish competition prices.

£/frame/h.p.

- to establish target prices for the new range £/frame/h.p.

TO BE FED INTO DESIGN

MANUFACTURING/PRODUCTION FUNCTION TASK

Substituting an improved manufacturing/production method which will ensure parts produced with reasonable accuracy at minimum manufacturing/inspection time & cost.

considering/approaching alternative suppliers for bought-out materials for more competitive prices

TO BE FED INTO DESIGN

DESIGN FUNCTION TASK

(considering an overall product re-design at various product levels.

Product concept design

Optimise motor functional/ industrial/engineering design to achieve higher outputs coefficients for each frame size for given quantity of active materials etc.

Overall motor range

-considering minimising no. of frame sizes
-also minimising no. of components to use for given frame sizes

COMPONENT DESIGN LEVEL

-consider an improvement hub design to make use of an improved process
-consider complete redesign of the stator frame to minimise no. components used to complete the frame.

FIG.(6-28) PROPOSED OUTLINES OVERALL SOLUTIONS FOR PRESENT PROBLEMS

COMPRESSOR	H.P. RANGE	FLANGE MTG. DETAILS -DRWG.	POLE	SPEED r.p.m.	COMPETITION FRAME SIZE
V350	95-140	C10190/528	8	230	CS3C
V500	162-195	C10190/528	8	729	CG0B

GENERAL SPECIFICATION

- OVERHUNG SHAFTLESS FLANGE MOUNTED CAGE MOTOR (S.C.R.)
- 3PH, 50 HZ, M.C.R. COMPLETE WITH RETAINING/WITHDRAWAL BOLT/WASHER
- SUITABLE FOR MOUNTING TO COMPAIR CRANKCAST AS DRG. C10190/528 (FOR POWERS UP TO 220 H.P.), AND C10530/281 (ABOVE 220 H.P.)
- SUITABLE FOR STAR/DELTA STARTING

ENCLOSED COPIES OF THE DRAWING.

TABLE (6.29). TYPICAL REQUIREMENTS OF COMPAIR LTD.

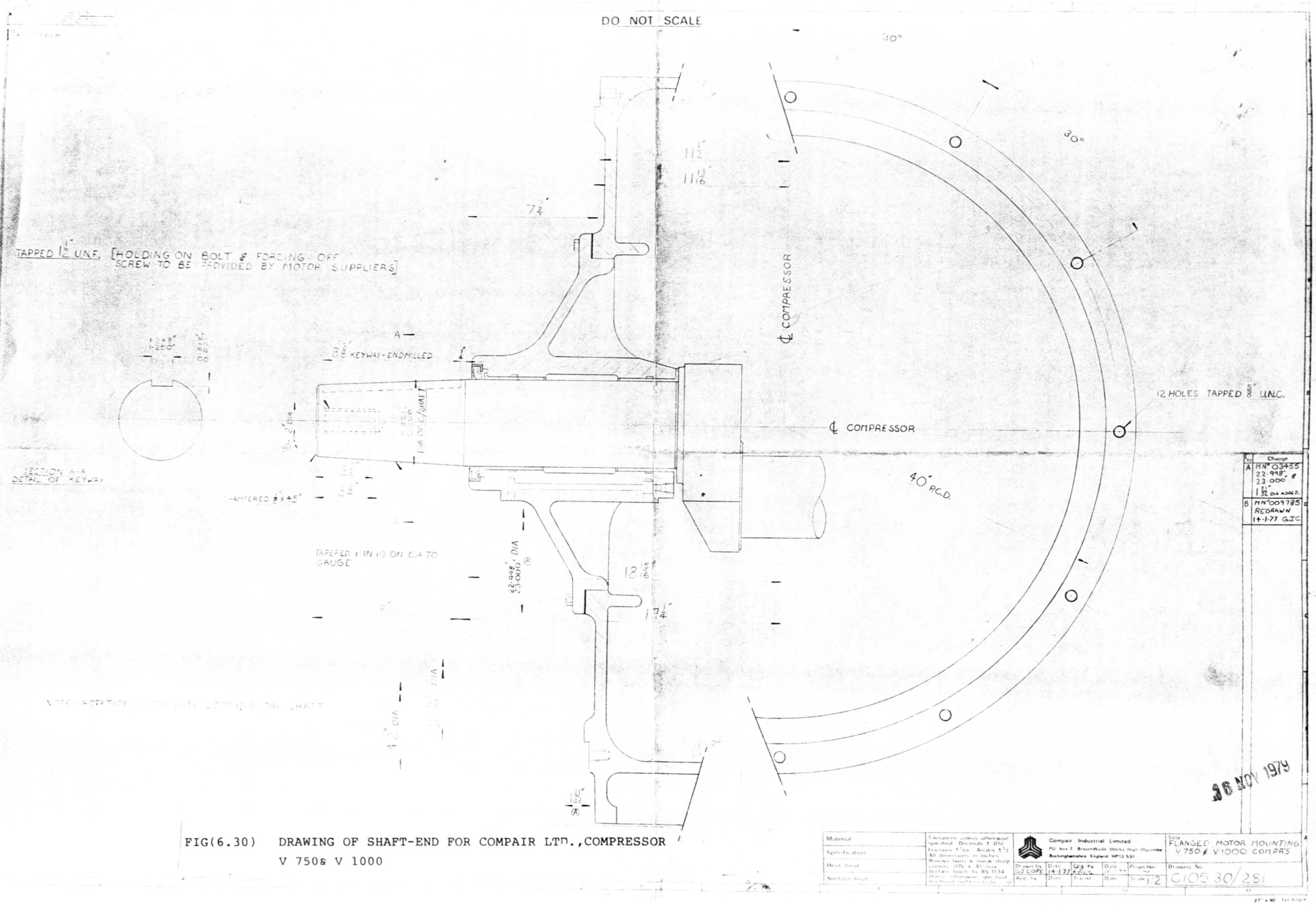

FIG(6.30) DRAWING OF SHAFT-END FOR COMPAIR LTD.,COMPRESSOR V 750& V 1000

DO NOT SCALE

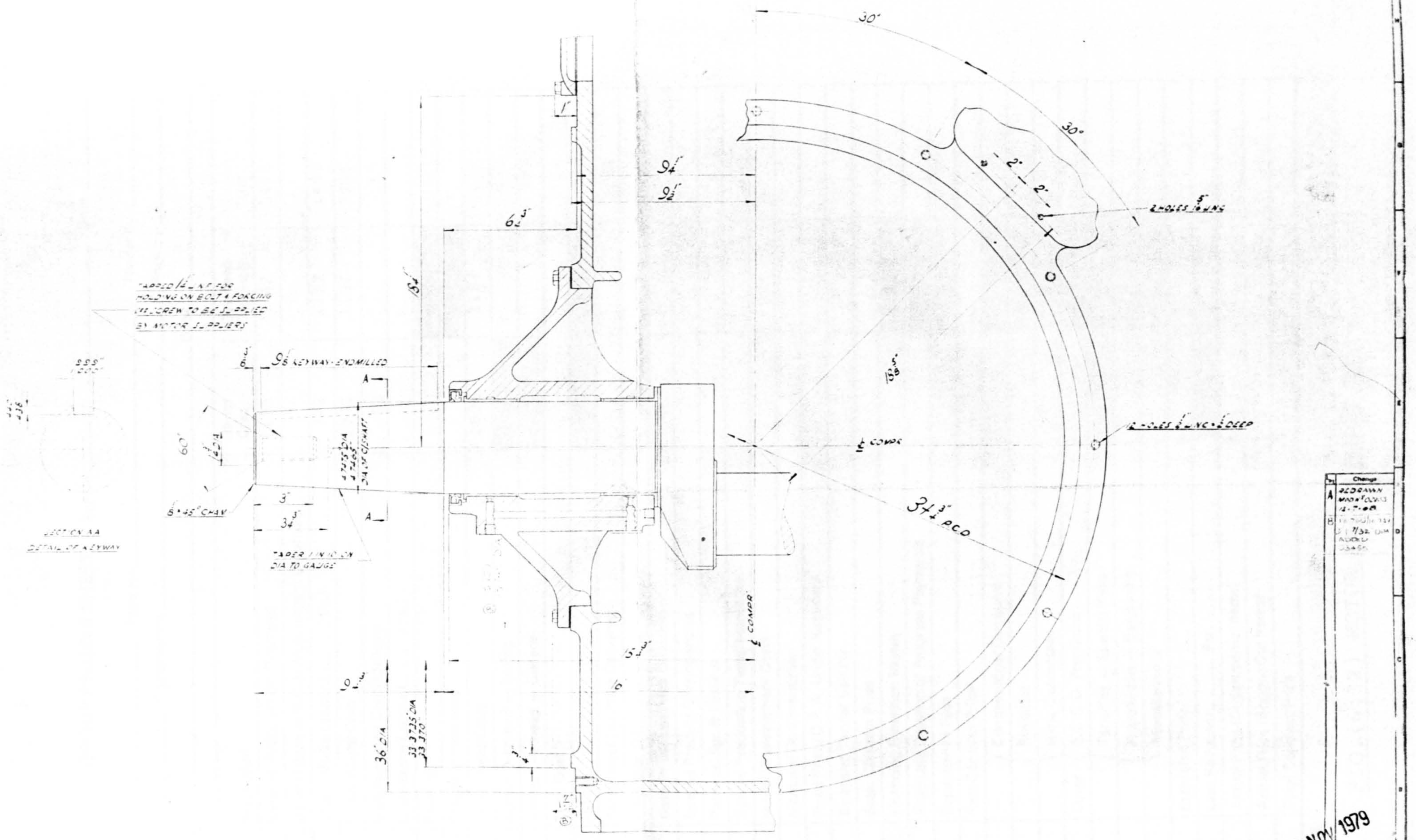

FIG(6.31) DRAWING OF SHAFT-END FOR COMPAIR LTD COMPRESSOR V 350& V500

MACHINERY GROUP PRICING SHEET

Ref No _____ Date _____

Price Book No _____ Page No _____ Tender by _____

No off _____ Customer etc _____ Price by _____

Size/Type _____ Duty _____

Item	Description	Direct Cost	Overhead Recovery	Total
1	Material/Procurement Overhead	1430	42	1472
2	Material (built in B.O.)/Procurement Overhead			
3	Direct Works Labour (.....Hrs.)	342	1152	1494
4	Direct Works Cost	1772	1194	2966
5	Manufacturing Contingencies	53		53
6	Engineering Labour (.....Hrs.)			
7	Packing			
8	Freight & Insurance			
9	Total Direct Costs	1825	1194	3019
10	Admin Overhead — Selling			200
11	Admin Overhead — General			385
12	Total Cost			3604
13	Margin			260
14	Basis Price/List Price Delivered			3864
15	x Number Off	x	x	x
16	Basis Price/List Price Delivered of.....			
17	Special Product Contingencies			
18	Patterns Jigs & Fixtures			
19	Special Production Tests/Inspection			
20	Model/Development Costs			
21	Manuals/Documentation			
22	Fixed Price/C.P.A. Under Recovery			
23	Extended Tender Validity			
24	Basic Contract Price			
25	Financing Retention Money			
26	Financing Deletion of Progress Payments			
27	Consultant's Fees			
28	Nett Contract Price			
29	Cover: Commissions/Discounts			
30	Cover: Royalties			
31	Cover: Bank Guarantees			
32	Cover: E.C.G.D. Premiums			
33	Cover: Penalties — Special Risks			
34	Cover: Negotiation — Bargaining			
35	Cover: Miscellaneous			
36	Estimated Price			
37	Less Reduction..... Per.....			
38	Actual Price (Departmental Items)			
39	Actual Price (Bought Out Items)			
40	Total Contract Price			

F.7785

FIG.(6.32) MOTOR PRICE BUILD UP

TABLE 6.33 SUB -ASSEMBLIES COST TARGETING

SUB. ASS. NO.	SUB-ASSEMBLY	DETAILS	PRESENT COST	TARGET COST	OVERALL T. COST.
1	COREPLATES	Stator & Rotor Coreplates.	£ 563	£ 508	£ 508
2	STATOR ASSEMBLY	Frame & Associate Parts	£ 660	£ 400	
		Winding Stator & Fit Frame & Machine.	£ 414	£ 310	
		Terminal Assembly.	£ 50	£ 50	
		Paint	£ 124	£ 95	
		Stator Copper	£ 145	£ 120	
		S.TOTAL	£1393		£ 975
3	ROTOR ASSEMBLY	Hub & Associate Parts.	£ 300	£ 210	
		Rotor Copper	£ 55	£ 55	
		Endplates & Key.	£ 60	£ 60	
		Air baffle.	£ 5	£ 5	
		Fan	£ 66	£ 45	
		Building & Winding Rotor.	£ 60	£ 60	
		Rotor Balancing	£ 74	£ 50	
		Rotor Machining.	£ 143	£ 85	
		S.TOTAL	£ 763		£ 562
4	MOTOR TEST		£ 280	£ 140	£ 140
		TOTAL PRESENT :	£2999	TARGET	£2185
			CONTINGENCIES		£ 115
			TOTAL TARGET COST		£2300

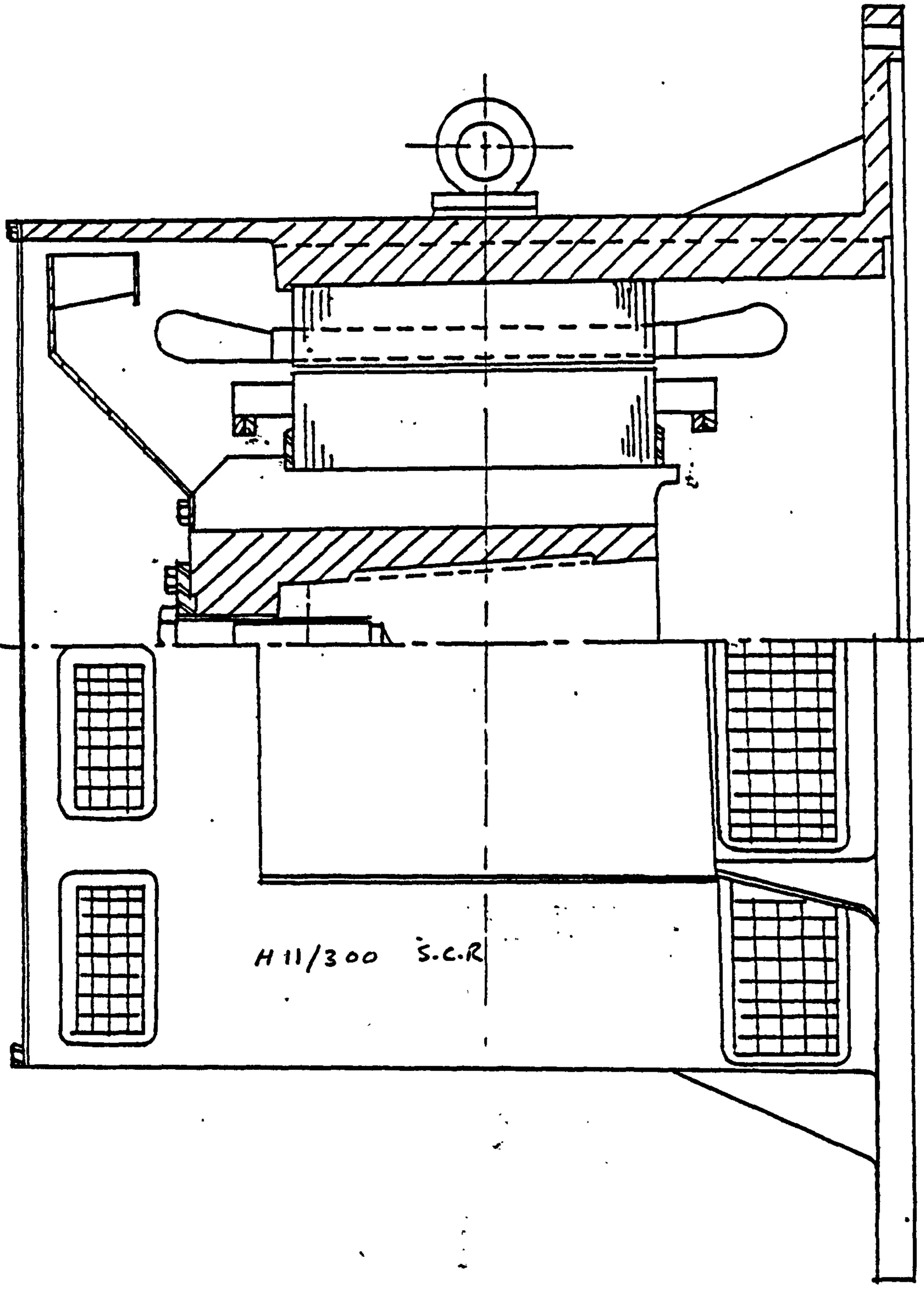

COMPLETE MOTOR ASSEMBLY :

PRESENT COST	:	£2999.00
TARGET COST	:	£2300.00

FIG.(6.34) COMPLETE MOTOR TARGET COST

SUB-ASSEMBLY (1)

COREPLATES - ROTOR AND STATOR

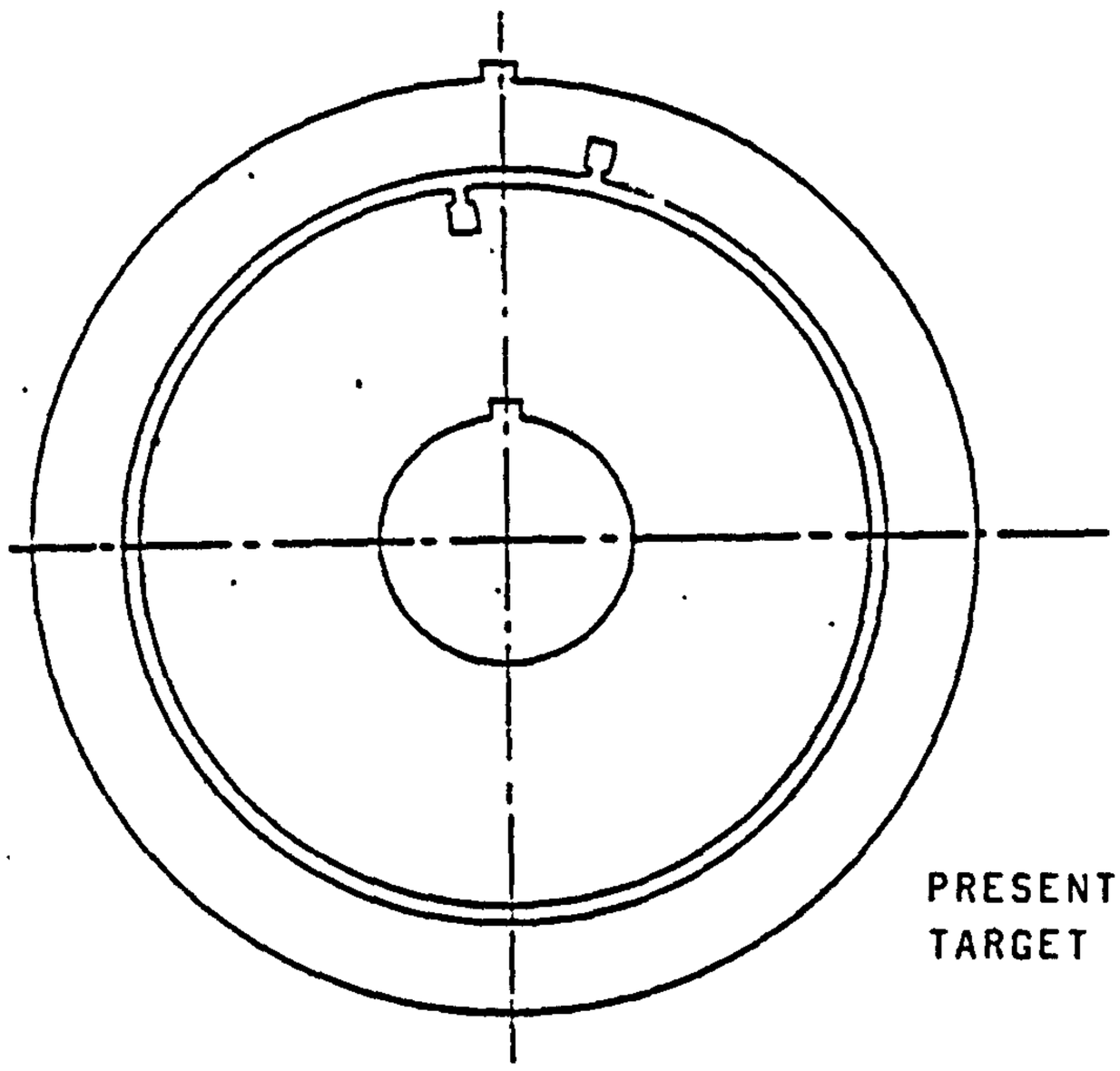

PRESENT COST :£ 563
TARGET COST :£ 2508

ROTOR COPPER

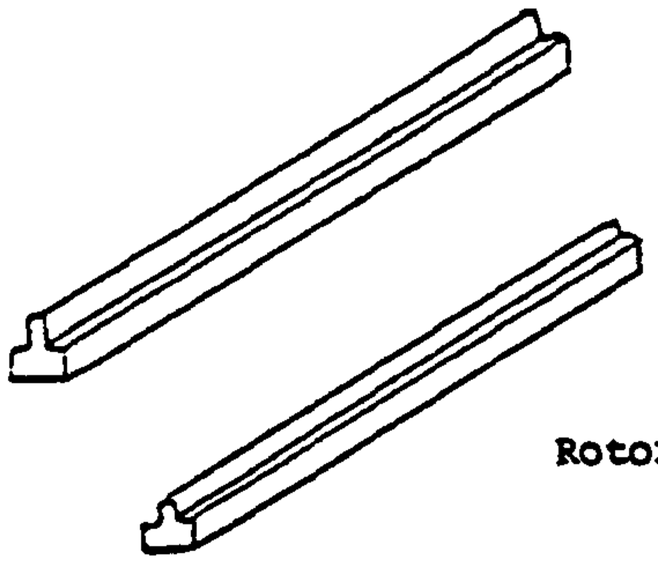

Rotor Bars

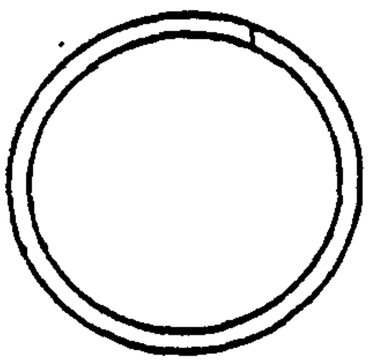

S.C.Rings

PRESENT COST :£55.00
TARGET COST : £35.00

STATOR COPPER

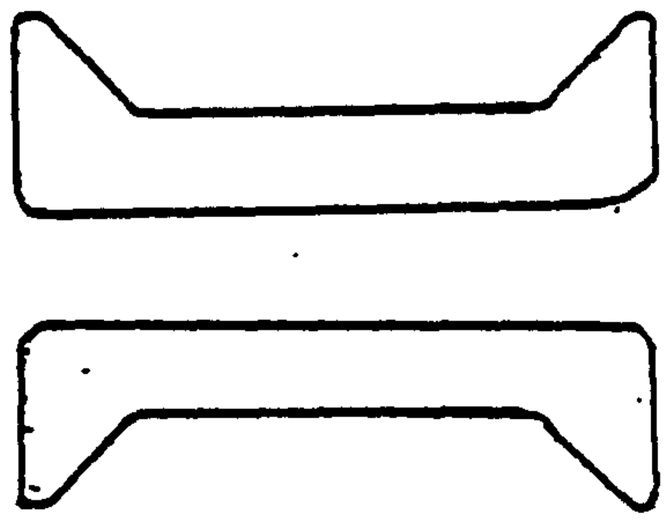

PRESENT COST :£ 145.00
TARGET COST :£ 120.00

FIG.(6.35)

FIG(6.35) TARGET COST OF ACTIVE MATERIALS

FRAME SUB-ASSEMBLY

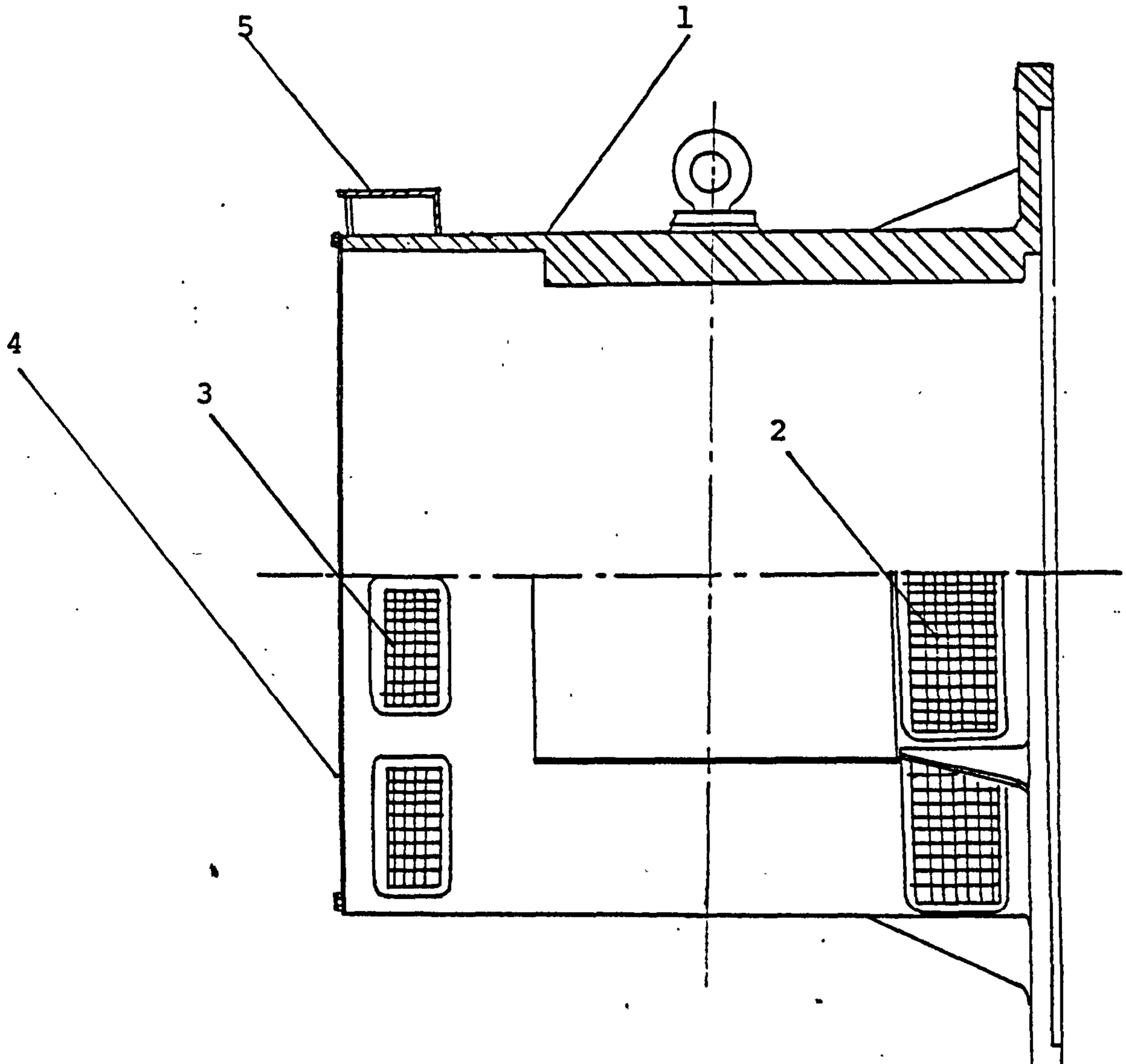

	MAT £	LAB £	O.H £	TOTAL PRESENT COST
1. Frame	340	21	69	430
2. Mesh Panel (2)	2	5.44	17.56	25
3. Mesh Panel (4)	0	9	30	39
4. Enclosing Guard	2.5	5	17.5	25
5. Top Cowl	60	-	-	60
Fit Mesh Panel	-	7	24	31
Fit Cowls		12	38	50
Total Present Cost				660
TARGET COST:				£400

FIG.(6.36) TARGET COST FOR FRAME SUB-ASSMEBLY

FIG.(6.37) TARGET COST FOR BUILDING STATOR

BUILDING, WINDING AND MACHINING STATOR PACK

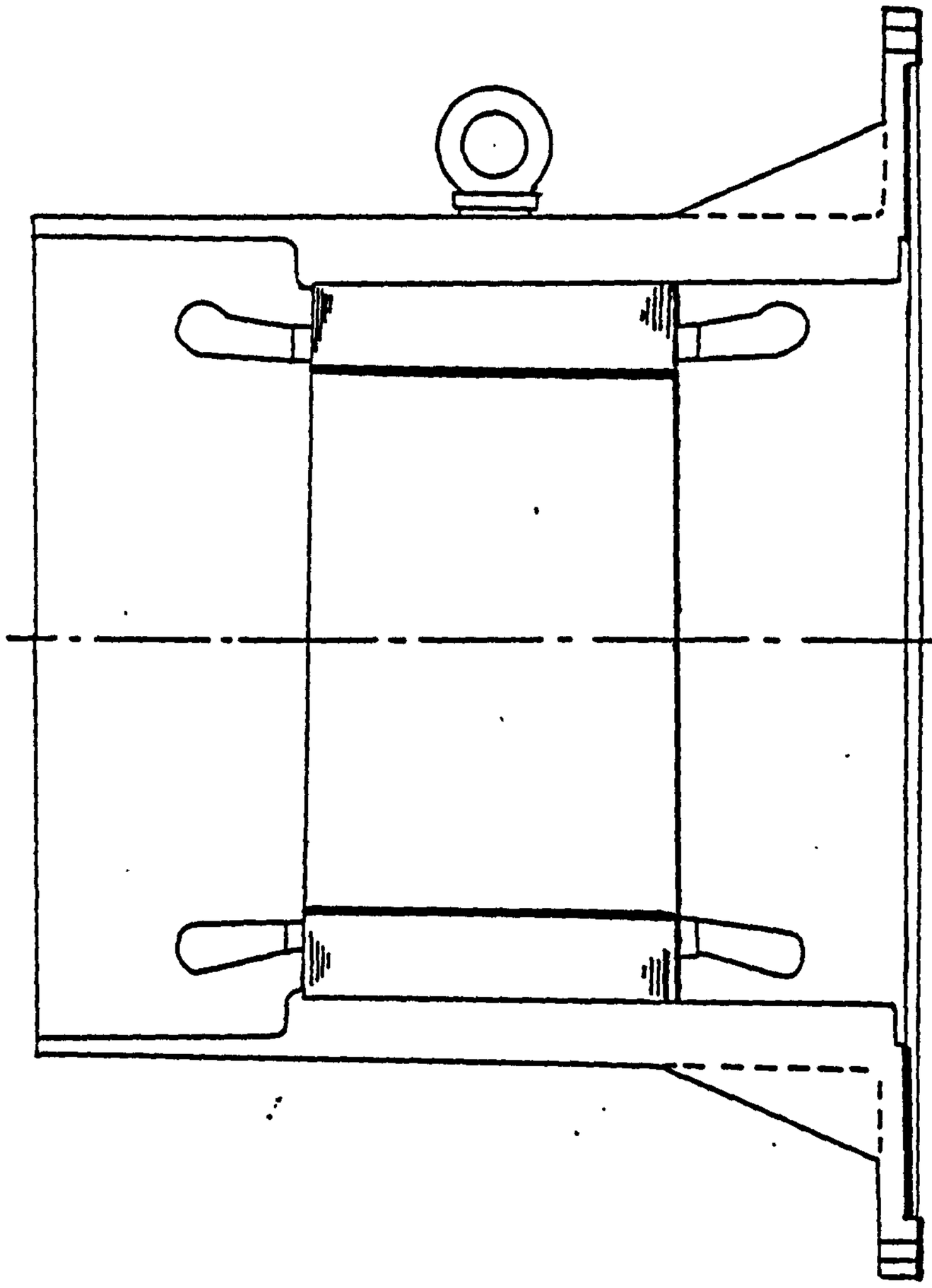

		LAB. £	O.H. £	TOTAL £
1.	Build Core	2.7	9	11.7
2.	Wind Coils	7	23	30
3.	Wind Stator :			
	Prepare Slot Linders	2.4	8.2	11
	Wind Stator	34	115	149
	Connect Windings	25	83	108
	Flash Test.	1.8	6	7.8
4.	Impregnate Pack :			
	Shrink into Frame	10	34	44
	Fit T. Block and Connect Terminals.	3	10	13
5.	Machine Frame for Alignment :			
	Paper up for Boring	2.5	8.5	11
	Bore Core and Spiggot	6	20	26
	Remove Paper	0.85	2.8	3.6
	TOTAL PRESENT COST :			£415
	TARGET COST :			£310

FIG.(6.38) TARGET COST OF TERMINAL BOX ASSEMBLY

TERMINAL ASSEMBLY

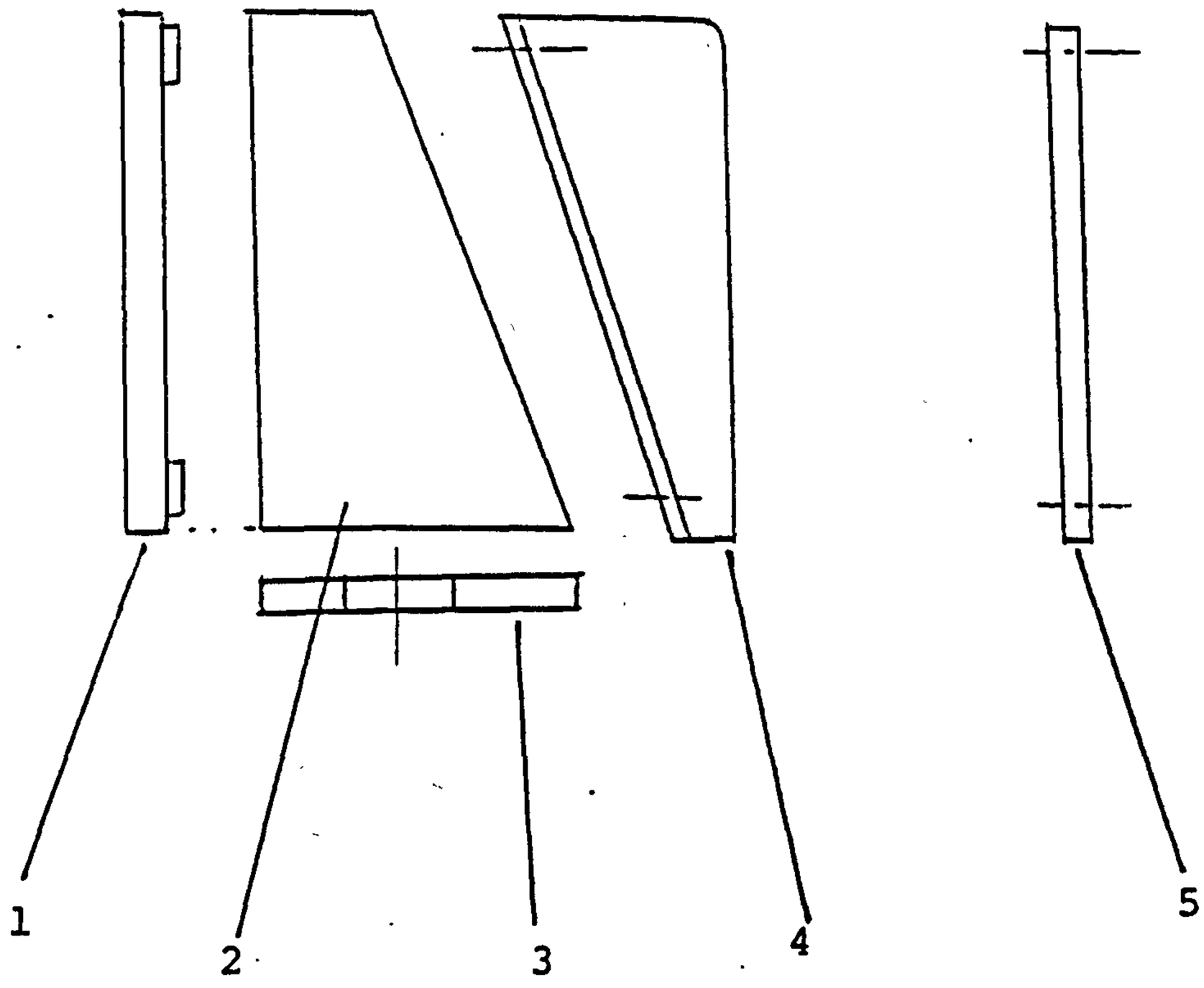

1. TERMINAL BLOCK.
2. TERMINAL BOX.
3. GLAND PLATE.
4. TERMINAL LID.
5. TERMINAL FACING.

TOTAL COST	:	£50.00
TARGET COST	:	£50.00

HUB & ASSOCIATE COMPONENTS SUB-ASSEMBLY

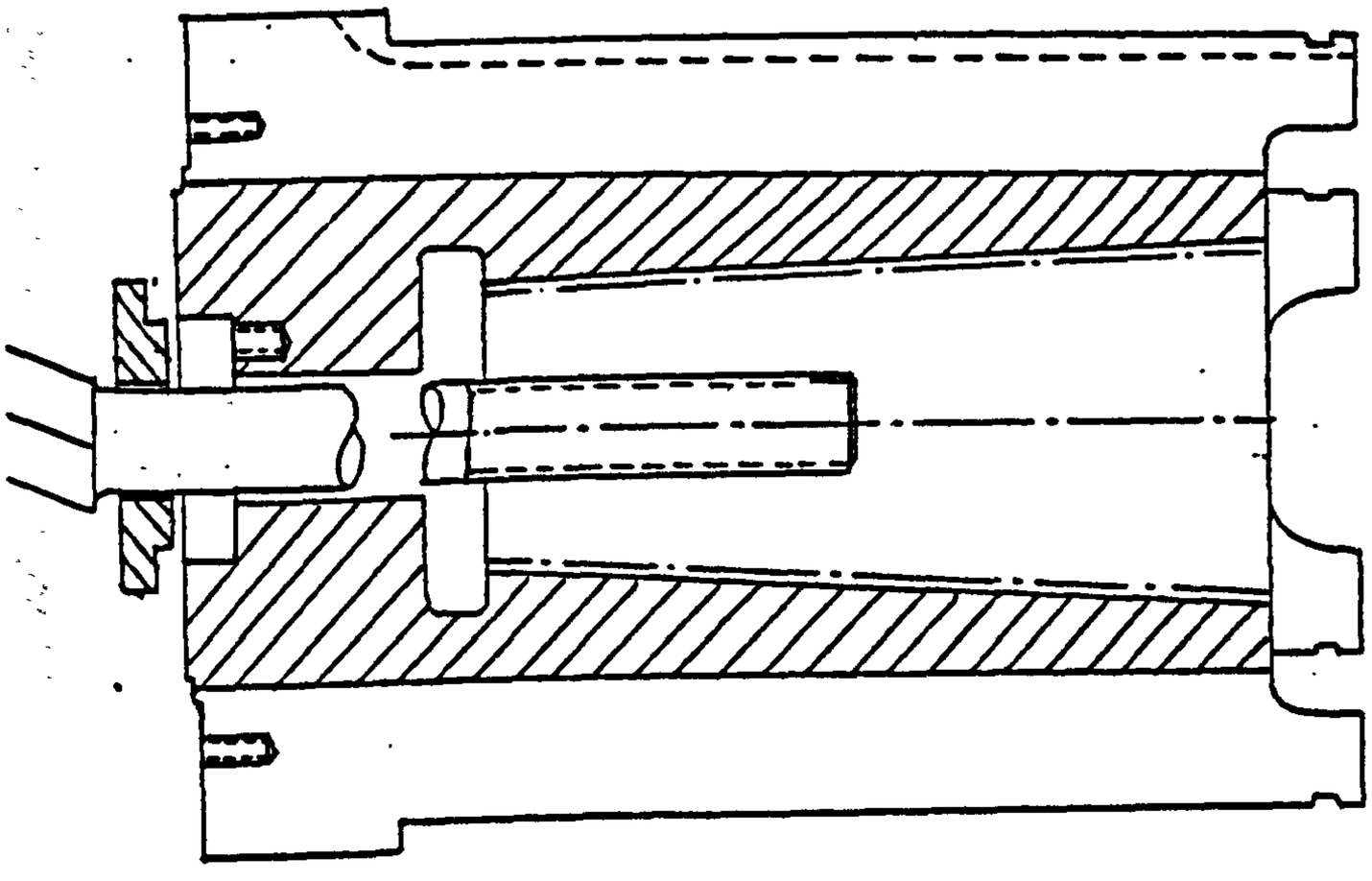

	MAT £	LAB £	O.H. £	TOTAL £
Hub	153	30	100	283
Retaining Plate	0.50	2	6.50	9
Scree n	7	0.25	.85	8
		Total Present Cost		300
		TARGET COST		£210

FIG.(6.39a) TARGET COST OF HUB&ASSOCIATE COMPONENT SUBASSEMBLY

ROTOR END PLATES & KEY

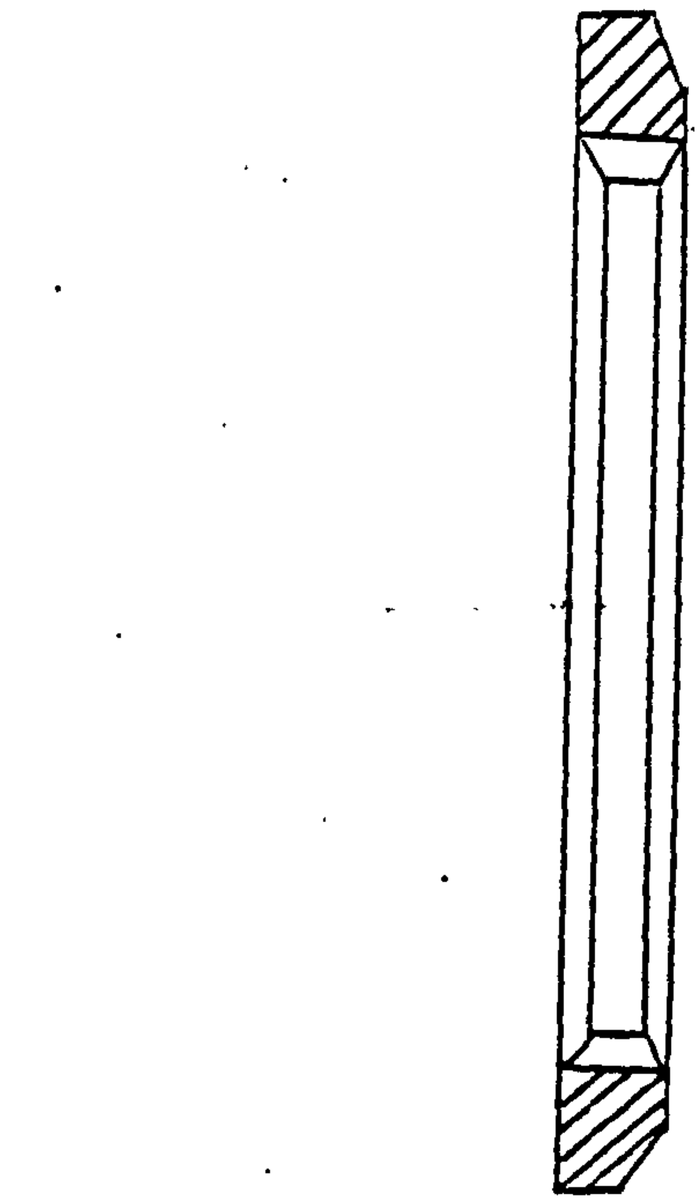

End Plates (2 off)

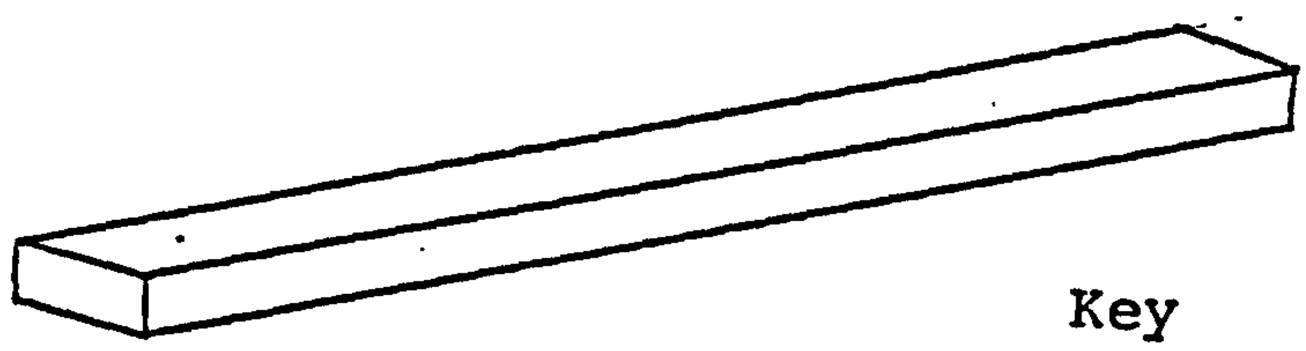

Key

	Mat	Lab	O.H	Total
End plates	32	4	13	49
Key	-	-	11	11

Total Present Cost	£60
TARGET COST	£60

FIG. (6.39b) TARGET COST OF HUB&ASSOCAITE COMPONENT SUBASSEMBLY

FAN SUB-ASSEMBLY

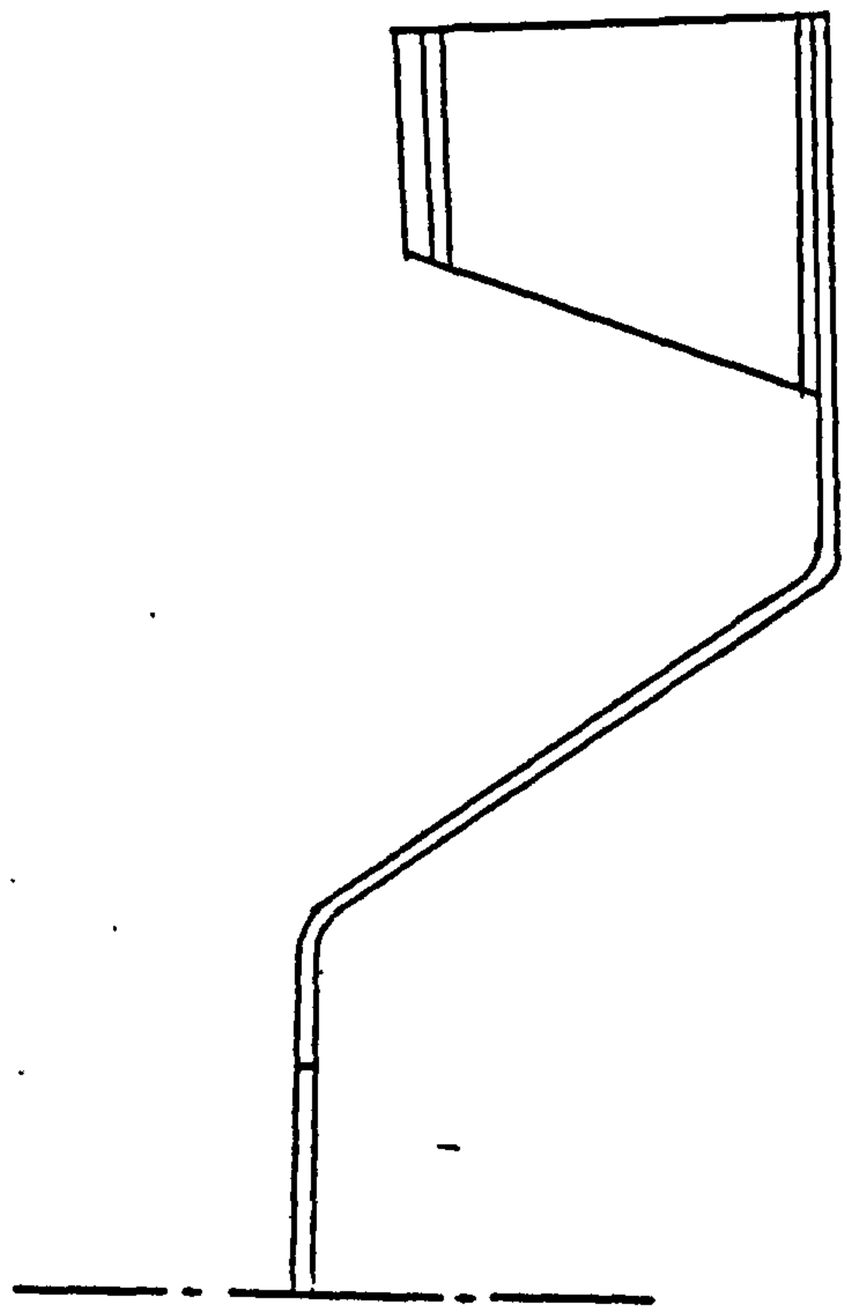

	MAT.	LAB.	O.H.	TOTAL
1. FAN BLADES				
Making and Welding.	-	1.75	6	7.75
2. FAN HUB				
(Mat.)	10.5	-	-	10.5
Pulmax and Rough Bore	-	1.7	5.7	7.35
3. FAN RING				
Mat.	12.4	-	-	12.4
4. ASSEMBLING AND WELDING				
Weld and Straighten Fan Assembly.	-	1.45	4.9	6.35
Finish Bore of Hub	1	3.4		4.4
Mark out and drill holes.	4	13.2		17.2
TOTAL PRESENT COST				£66
TARGET COST				£45

FIG.(6.40) OF TARGET COST OF FAN ASSEMBLY

BUILDING PACK AND WINDING ROTOR

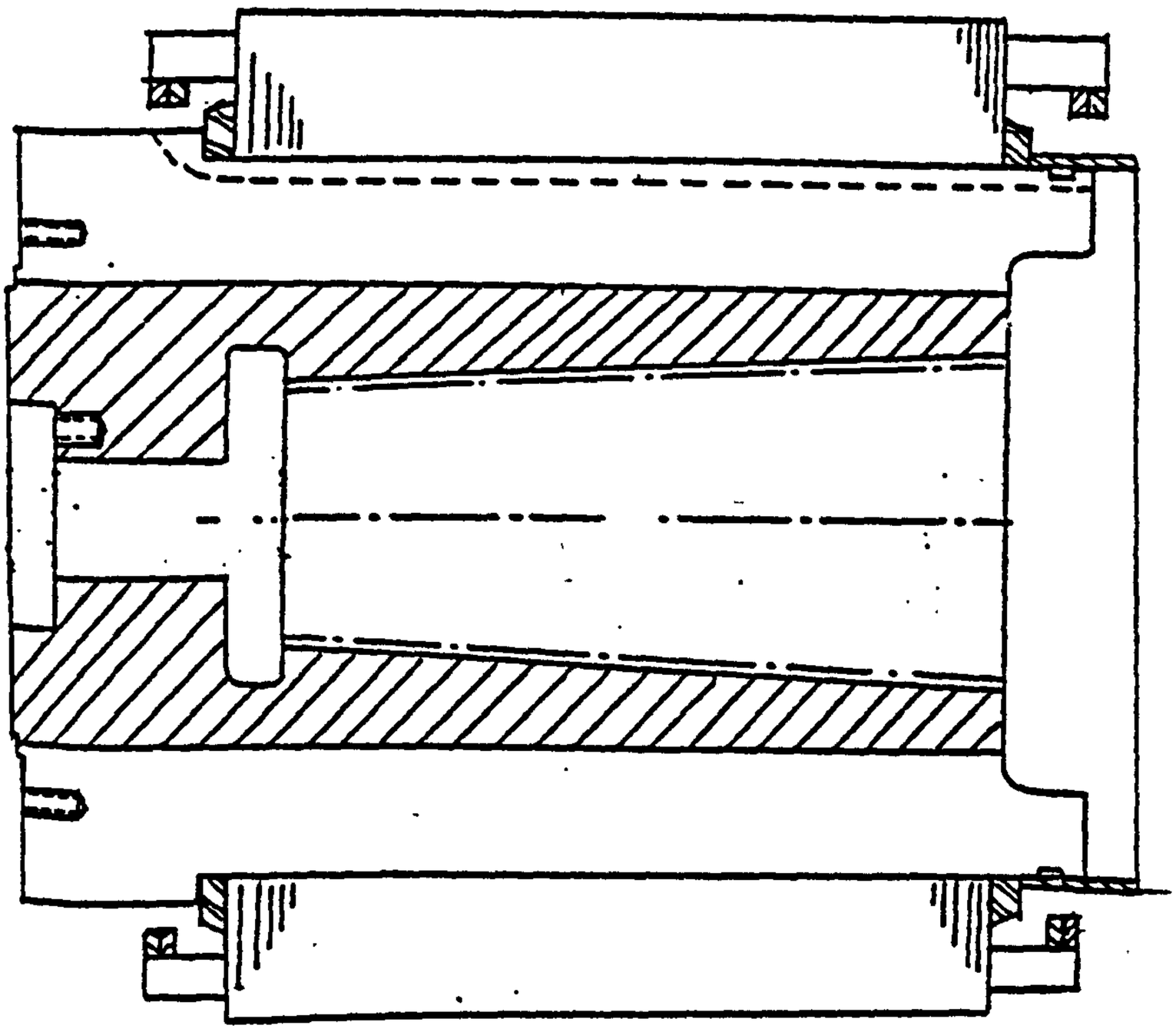

	LAB.	O.H.	TOTAL
DRESS ENDPLATES AND MAKE KEY	1.6	5.4	7
BUILD CORE INTO HUB AND FIT ENDPLATES AND FIT KEY.	3	10	13
WELD KEYS	1.5	5	6.5
FIT AIR BAFFLE	1.6	5.4	7
CUT ROTOR BARS AND ROLL S.C. RINGS	1.3	4.3	5.6
WIND ROTOR & BRAZE BARS	3	9.9	12.9
PAINT WINDINGS	1.9	6.5	8.4

TOTAL COST : £60

TARGET COST : £60

FIG. (6.41) TARGET COST OF BUILDING ROTOR PACK

ROTOR MACHINING

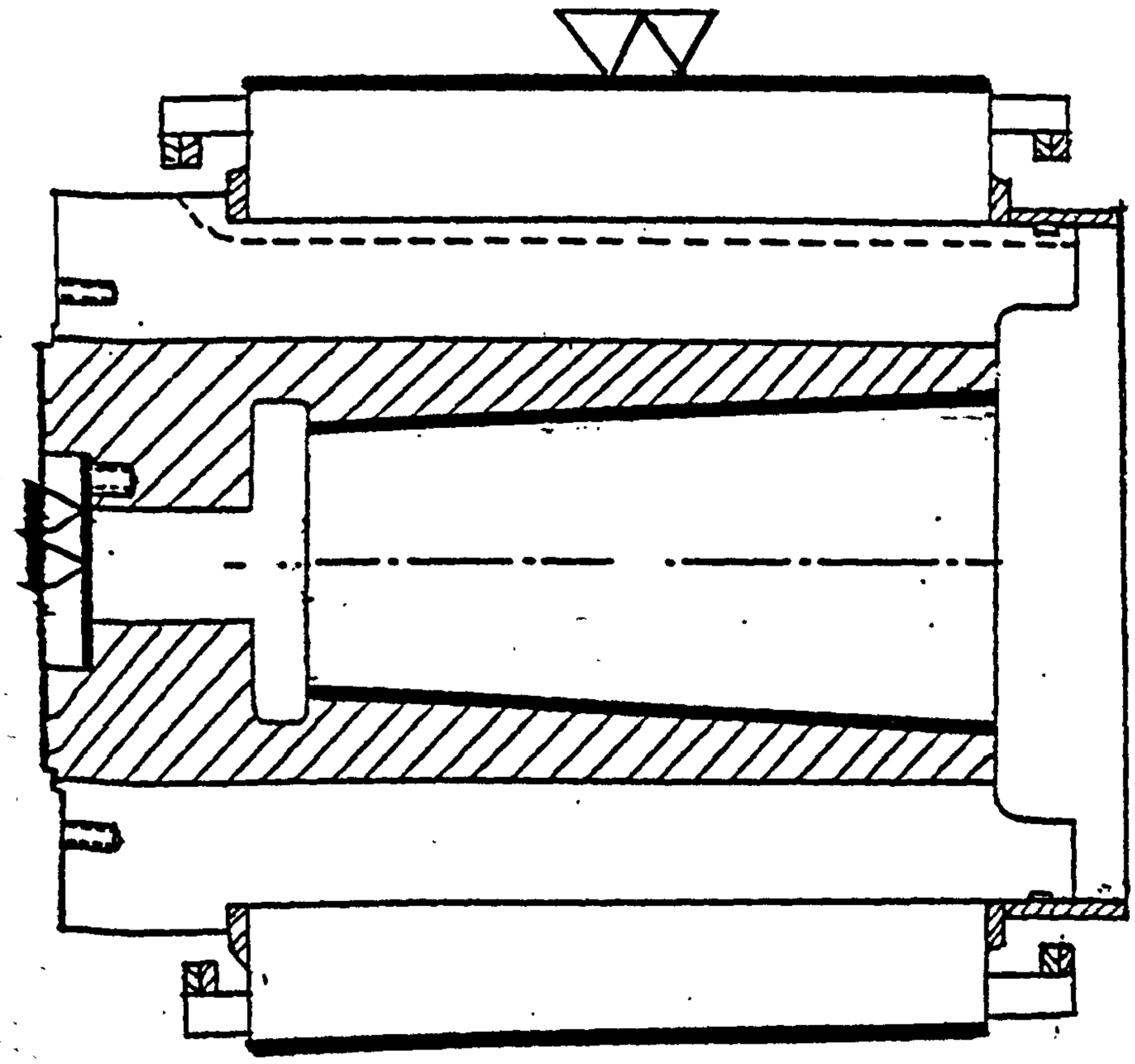

	LAB.	O.H.	TOTAL
TURN O/D AND FINISH RECESS	29	98	127.4
CLEAN AND FILE	3.6	12	15.6

TOTAL PRESENT COST	£143.00
TARGET COST	£ 85.00

FIG (6.42) TARGET COST OF ROTOR MACHINING

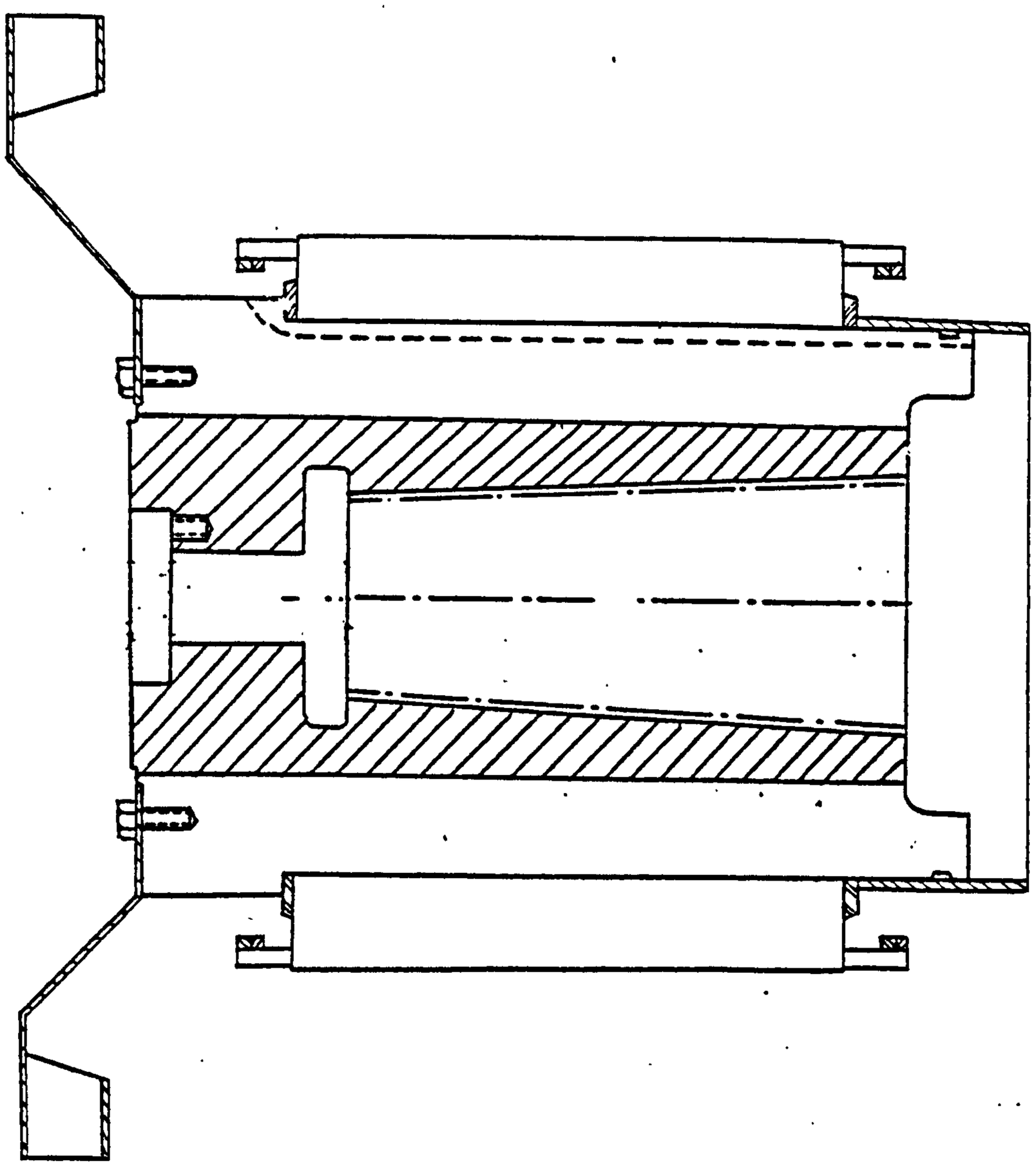

	LAB.	O.H.	TOTAL
FIT BALANCING MANDREL	0.9	3	3.9
FIT FAN AND BALANCE	16	50	66
REMOVE BALANCING MANDREL AND FAN.	1	3.4	4.4
TOTAL PRESENT COST			74
TARGET COST			£50

FIG.(6.43) TARGET COST FOR BALANCING ROTOR

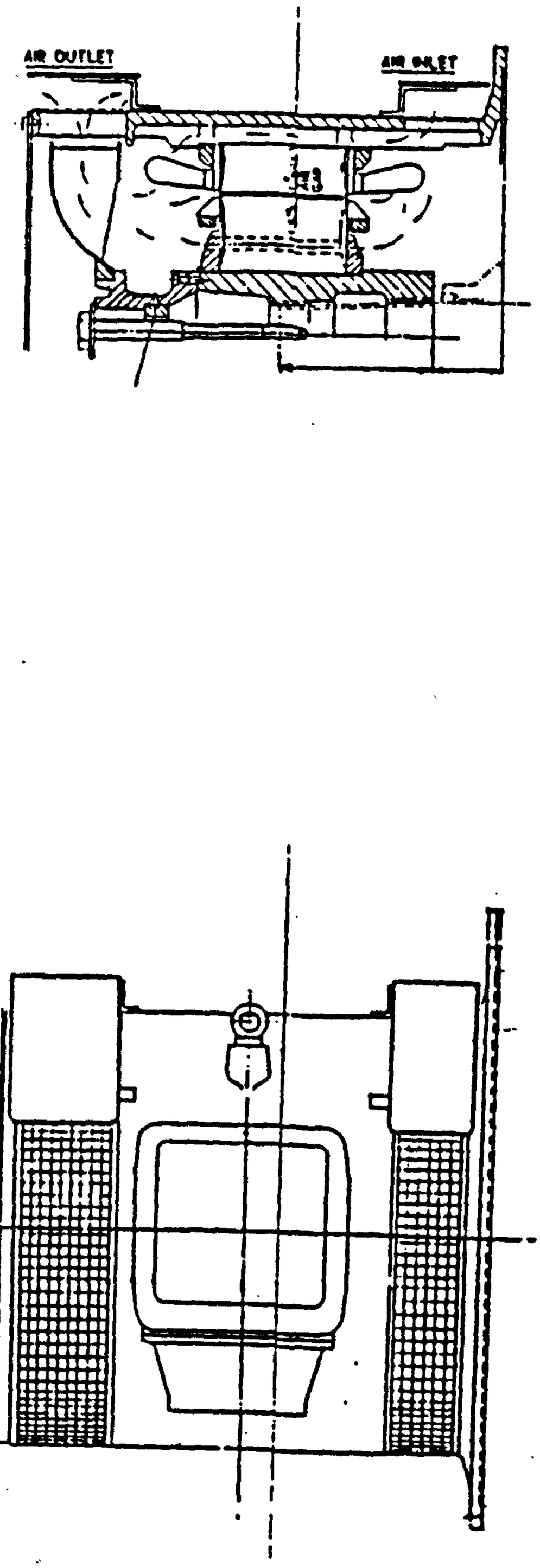

FIG(6.44 MODIFIED STATOR FRAME VENTILATION-OPENING AND FAN DESIGN.

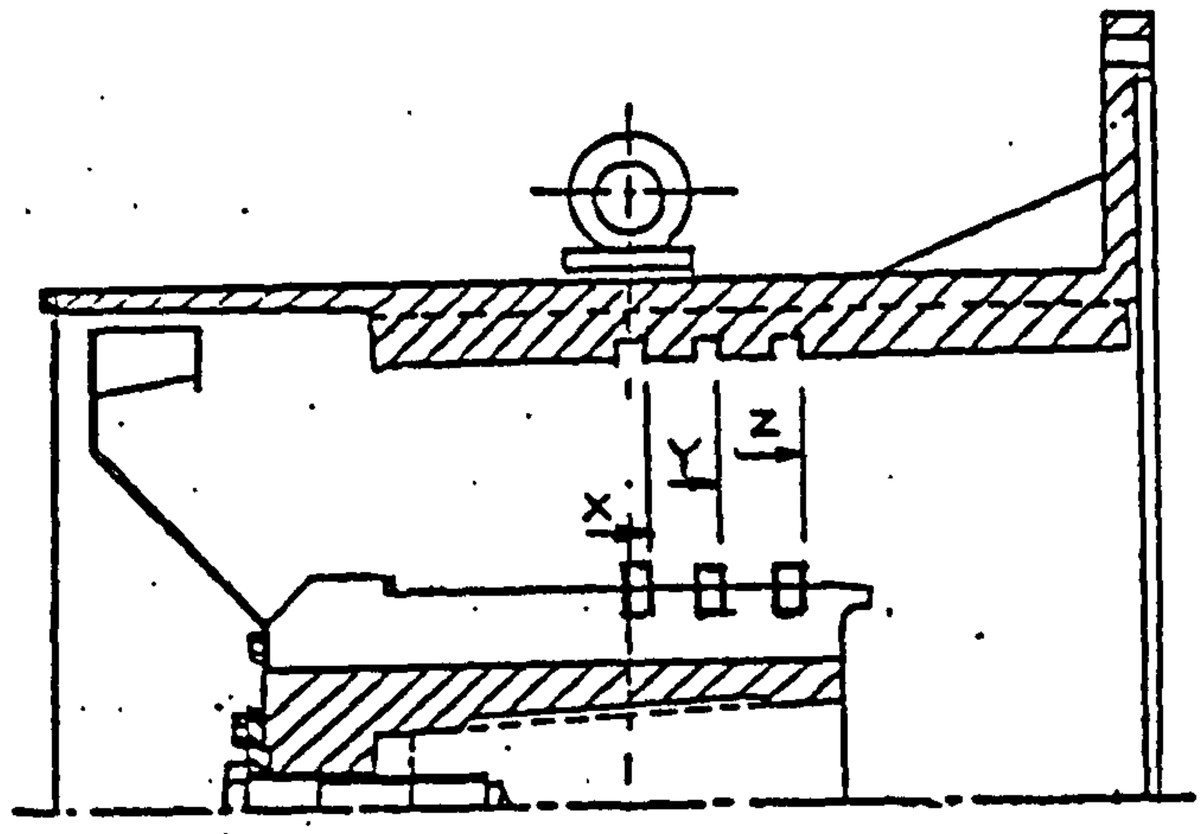

		CORE LENGTH M.M.	POWER HP
HC 10	X		100
	Y		125
	Z		150
HC 11	X	180	175
	Y	240	200
	Z	300	225
HC 12	X		250
	Y		300
	Z		350

FIG.(6·45) NEW DESIGN OF ROTOR & STATOR WITH BUILT-IN SLOTS TO ACCOMMODATE THREE NEW CORE LENGTHS

CHAPTER (7)

" AN OPTIMUM DESIGN OF A VERTICAL LONG SHAFT CENTRIFUGAL PUMP FOR MINIMUM MANUFACTURING COSTS"

7.1 INTRODUCTION

This case study is concerned with establishing procedures for obtaining the most economic design for the manufacture of a range of vertical long-line shaft pumps Fig.(7.1-7.4). This type of pump consists of a main centrifigural pump (1) suspended at the end of a series of flanged tubes (2) to form a rising main which can be up to 200 ft. long. The pumps is driven by a sectionalised long shaft (3) supported by intermediate bearings (4) spared along the axis of the rising main. The pumped fluid is delivered to the surface via a delivery bend(5) built into the top supporting structure (6) main thrust bearing (7) is mounted within this structure and power is transmitted from the electric motor (8) to the long shaft by a relatively short drive shaft coupled to the electrtic motor which is mounted on top of the support structure.

This pump is used mainly for off shore platform applications for lifting seawater to fulfill various functions on the platform such as cooling , fire fighting etc. Obviously a large potential market exists for this product but to date except for the 5 metre lift pump, the study company have been unable to match the rices of the competing companies by a margin of as much as 60%. consequently the decision was made to examine the causes of the high manufacturing cost and hence to take the necessary remedial action to enable the company became more competitive.

In searching for the cost sensitive areas the cost of each major section was identified and expressed as a percentage of the total cost of the product used at different lifts .

As a result of the investigation it was found that as much as 60% of the cost of the product is contained in the manufacture of the rising main, shaft and its bearings . In the present case the effect of pipe and shaft material combination as the cost of manufacture was studied in details and procedures for optimising the material combinations and design for a range of functional conditions have been developed. Clearly even substantial reductions

in the cost of producing the centrifugal pump and supporting structure would only have a marginal effect on the total cost of the product.

7.2 STUDY OF CURRENT PROCEDURE OF ENGINEERING AND DESIGN OF PUMPS

Pumps are made against special orders of individual customers. Prior to the order stage, however, the study company would have to submit a brief technical proposals together with the associated price to the customer against a preestablished specificaions and commercial conditions. The specifications are prepared by the customer and it determines certain constraint within which the pump has to be built. This inturn include the following .

- The pump-duty, i.e.the flow rate of pumped fluid and the pressure at which this flow has to be deliverd
- Length of the pump below the deck level .
- Preferred materials of construction of the individual components of pump
- maximum length of intermediate shaft (fixed by international standards)
- Other constraints related to certain design features such as type of bearings, couplings ..etc.

Against these specifications the company technical sales and engineering departing would carry out certain studies as a result of which they submitt a brief technical proposals inline with the specifications together with the price.These inturn will include the following:-

- Size of the pump , No. stages, power, and speed in R.P.M.
- Confirmation that materials of construction are in line with specifications and / or submition of alternative materials which can be more cost effective.

Only as a selling point the following can be proposed :-

-A alternative special expensive materials which is considered superior to those materials stated in the specification .
- Special certain methods of manufacture of individual components which ensures and implies a higher quality produced parts and consequently longer life for these parts.
- Special certain design features for individual subassemblies to ensure an overall good performance.

- Finally and most important, the selling price for main offer and alternatives.

If the technical proposals and the price of te study company were successfull an order would be placed on the company to carry on with the manufacture of the pump within the outlined submitted technical proposals. There would be certain limits within which the company can use its own design standards and practices without having to refer to specification or the customer.

CURRENT PRACTICE RELATED TO MINIMISING THE PUMP MANUFACTURING COSTS

In investigation whether there are a formal approach to product cost reduction it was found that apart from the individual attempts which are carried out by the purchasing department to seek competitive suppliers quotations for materials and parts , there is no formal awarness of the cost of manufacture nor the cost is considered as an objective. The selling price is built on the basis of estimated manufacturing cost plus adiminstrative and overheads profit margins. Certain discrete price discounts are considered from time to time to match existing competition , but they usually result in a reduction of a profit margin due to fixed cost of manufacture .

7.3 STUDY AND ANALYSIS OF FACTORS INFLUENCING THE COST OF MANUFACTURING THE PUMP

In investigating high cost areas, a pump was selected for cost analysis. A preliminary investigation however have indicated that cost analysis of individual pumps would not be meaningfull , since that this type of pumps have several design and construction parameters which vary from one pump to another and significantly influence the distribution of the overall manufacturing cost of the pump . These parameters are; pump duty, length of the pump under the deck level, material of construcion and the rotational speed. The influence of the above parameters on the pump manufacturing cost is discussed as follows:-

a) The pump duty (flow & pressures):

The higher the flow rate of the pumper fluid the larger the size of the pump, and consequently the heavier and the more expensive, it would be .For the same flow rate, the higher the required pressure of the fluid the more number of pump stages i.e. pump bowls, would be required .

b) Length of the pump

For the same pump duty the longer the pump ,under the deck level, the higher the cost of the rising main and the shaft would be . This is a direct relationship and can be schematically represented as shown in fig. (7.5).

c) Material of construction

There are numerous types of materials which can be used for seawater application . For the same pump duty ,design and length the distribution of the overall manufacturing cost of the pump can vary;dependent on the selected materials of construction as shown in fig(7-6).

d) Speed of the pump

The rotational speed of the pump is determined as a result of the hydraulic design employed which inturn can vary for a given duty. For the same duty the higher the speed of the pump the smaller the pump size , and the less weight of the pump, would be. If for instance the pump speed is increased by 50%, say from 1000 R.P.M. to 1500 R.P.M. the total weight of the pump can be reduced by as much as 30%.

7.4 STUDY AND ANALYSIS OF SUBASSEMBLIES DESIGNS , MATERIALS OF CONSTRUCTION & METHODS OF MANUFACTURE ;

For further study and analysis the complete pump assembly was broken down into subassemblies as follows:

1- Line shafts, rising main columns and associated parts.

2- Discharge bend / support structure and associated parts.

3- Pump bowls (diffusers) , impellers and associated parts.

Since that the cost of the line shaft and rising main subassembly represents the highest proportion of total pump manufacturing costs, most of the attention was given to analyse this particular subassembly. On the other hand, due to limitation of time it was decided at this stage to extend the study only to include analysis of the methods of manufacture of each individual component with the objective of arriving at more economical methods without having to question the functional design of the subassembly.

7.4.1 DESIGN PARAMETERS OF RISING MAIN PIPES AND SHASFTS SUBASSEMBLY

Fig. (7.2) shows typical CROSS-SECTION drawing of the rising main pipe line shaft and associate parts subassmebly. The figure shows that the subassembly consists of flanged pipe, bearing bracket , bearing bush, the line shaft and the shaft sleeve.

a)Design parameters of rising main pipe and shaft fig(7.7)

The overall design of the pipe is determined by establishing the following parameters:

Pipe internal diameter 'ID' :

This is determined by the flow rate of the pumped fluid and by the maximum allowable column pressure losses. The later determines the minimum design value for the I/D .

Thickness of pipe "t"

From the design point of view, the minimum thickness of the pipe is decided on the basis of the maximum applied tensile stresses acting down words due to total pump weight, the maximum hoop stresse as a result of internal pressure applied by the fluid and the material's maximum tensile strength. However minimum value of 'T' is usually decided by the limitation of the employed anufacturing process.

Length of pipe (L)

No limitation as to the minimum value of "L" from the design point

of view.

The maximum allowable length of pipe is a function of the maximum allowable shaft length 'L' . This in turn is governed by imperial design formulas as well as international standards.

The flange outside diameter O-D

This is a function of the pipe internal diameter I/D .

Shaft Diameter 'D'

This is determined by the maximum power transmitted by shaft, maximum down thrust generated by the pump and by the material combined ultimate tensile and torsional strengths.

The shaft diameter 'D' is also function of the shaft length "L" . For stiffness purposes the shaft diameter'D' will increase as the length increases. In another way, for each shaft diameter'D' there will be a maximum allowable value of shaft length "L"(between bearings) to ensure shaft stiffness, for vibration purposses.

7.4.2 ANALYSIS OF MATERIALS AND METHOD OF MANUFACTURE FOR RISING MAIN PIPES AND LINE SHAFT

A) Materials of constructions

Dependening on the particular chemical analysis of the pumped sea water the most economic material in terms of (£/KG) is selected to suit the application,unless customer specifications state otherwise. Typical materials selected for the rising main pipe and the shaft is the 316 stainless steel (18 cr) .

B) Method of manufacture

The flanged pipes are sand cast and then machined . The shaft is machined from solid.

D) Investigating alternative materials and method of manufacture :-

Analysis of cost :

Fig (7.6) shows that the cost of materials represents the major element of cost.In analysing the structure of the total / cost of materials it can be found that it depends on the following element:-

- Material contents (weight of finished product).
- Material utilisation
- Cost of material £/KG.

This means that the final cost of the material can depend on

factors other than its price ,such as the employed method of manufacture and the properties of the material itself.
It was decided, therefore, that in order to reduce the cost of manufacture, an alternative materials and perhaps manufacturing process should be sought which would have different structure of cost but would result in a more economic end product.
In investigating alternative materials to the "316" stainless steel, it was found that a new duplex stainless steel known as " Zeron 25 " available and it is a superior material from both the mechanical strength and corrosion resistance point of view .
Although the price of the "Zeron"material is in terms of £/lb weight is higher than the (316)SS but because of its higher mechanical strength, less material will be required thus in overall may become less costly. More over it was found that unlike the "316"SS, this material can be centrifugally cast thus minimum required thickness for casting would be much less. In addition to the fact that the quality of the final casting would be superior to that of the '316'SS static cast . See fig. (7.8). A specialised foundry supplier was approached to seek quotatin for supplying pipes castings in this new materials who inturn have forwarded the price cost given in table (7.9). The table shows that the price of the pipe vary according to pipe bore and pipe length. The smaller the bore of the pipe and the longer, the less costly it would be. The table also shows that the prices given are for casting pipes and flanges seperately and then welding them together with the alternative options of either rough machined or finish machined flanges. Further investigaion have indicated that there are several materials exist which have different properties, i.e combination of corrosion resistances and mechanical strengths, all at different prices and can be used to costruct the rising main pipes, using different method of manufacture Table (7.10) lists the different materials and the associated manufacturing processes. Each of listed process will have diffrent capabilities and limitations regarding ; maximum length of pipe, minimum thickness , whether flanges can be intergrated with the pipe and so on .
In studying the methods of manufacturing the shaft it was found that, comparing with the rising ain pipes , less number of alternative materials can be used for constructing the shaft with

only two alternative methods of manufacture which can be used with all materials i.e. machining from rolled bar and forging Fig.(7-11)

Other parts in the sub assembly, i.e. intermediate bearings, shaft sleeves and intermediate shaft coupling were studied in a similar manner. All applicable materials and methods of manufacture are listed in table (7.2).

7.4.3 ANALYSING MATERIALS AND METHODS OF MANUFACTURE FOR OTHER PARTS OF THE PUMP :

In similar manner to above, alternative materials of other parts of the pump were investigated. These are listed in table (7.12).

7.5 RECOMMENDATION FOR AN IMMEDIATE IMPROVED DESIGN PROCEDURE

In view of the initial findings, as discussed above, it was thought that minimising the pump manufacturing costs can be achieved by arriving at an optimum combination of suitable materials and processes for the various parts of the pumps.

This optimum combination however should be achived at the bid proposal stage to allow the company establish a realistic and competitive target price for the complete pump assembly.

Subsequent to order getting , and at the pump design stage, another action would still be required, which is finalysing the individual component design in the manner which would enable the preestablished target price to be met. The above can be considered and achieved without having to change the subassemblies main functional design arrangements. This is further discussed as proceeding.

7.5.1 OPITMISING RISING MAIN & LINE SHAFT CONCEPT ARRANGEMENT

A) Factors influencing the manufacturing costs

It was concluded from section (7.5)above that the pipe and the shaft manufacturing costs is influenced by several factors as follows :

- Pipe manufacturing cost is influenced by the selected material , the process and the length of the pipe . The three factors are interrelated.
- The shaft manufacturing costs is influenced by the length of the shaft, the diameter , material and the selected manufacturing process.

The forgoing factors are also interrelated Fig (7.13) shows the relationship between all factors ifluencing the cost of the pipe. The figure shows that in order to achieve, and determine the lowest possible cost to manufacture this particular aubassembly , the ollowing parmeters has to be optimised and determined for given specifications:

For the pipe

- The length of the pipe (equal to shaft length)
- The internal diameter & the thickness
- The materials

- The primary process & the finishing process

For the shaft

- The length of the shaft (equal to pipe length)
- The diameter of the shaft
- the materials
- The primary & the finishing process

B) Optimisation of design and manufacturing parameters

Each of the above factors have to be decided upon seperately or in combination with other factors to achieve most economic concept arrangement to meet a pre-established design specifications , for an available range of materials and processes. The parameters which influence the determination of each of the above factors are discussed below.

The length of the pipe "L"

several economical and technical parameters influence the determination of the final length of the pipe . From the desing point of view the length of the pipe has to be equal to the length of the shaft. The later , in most cases , has to be limited to three meters long maximum for vibration pruposes etc. No limitation as to the minimum length of pipe from the design point of view. From the manufacturing point of view the maximum producable length of pipe varies from one process to another dependent on the capability of the particular manufacturing process. However the later varies for the different processed materials. From the cost point of view it has been established , already that the cost of the pipe , provided by the primary process (i.e. £/lb weight) decreases as the length of the pipe increases. Also,generally, as the length of the single pipe increases the total number of pipes per pump will be reduced , resulting in a reduction of total set up time for machining the pipes as well as a reduction of the number of associated parts for the assembly . This means less bearing brackets, bushes, sleeves - etc.

However , the cost saving which can be achieved by increasing the length of the pipe can be offset by the resulted increase in the cost of the shaft. As the length of the shaft increases the diameter of the shaft will have to be increased proportionally ,

resulting in increasing in the materials as well as processing costs see Fig.(7.14). So , as a result, using miximum length of pipe may not be the most economic solution . This was taken into consideration in proposing the optimisation procedure.

THE PIPE INTERNAL DIAMETER & THICKNESS

From the hydraulic design point of view the larger the diameter of the pipe the better the pump performance would be. The hydraulic design , therefore, limits the minimum possible diameter of pipe . From the manufacturing point of view, there is some flexibility as to the minimum or the maximum producable pipe diameter. From the cost point of view the less the diameter of the pipe the less costly it would be.

The thickness of the pipe is determined by two factors ; the design calculations and the minimum processing thickness whichever higher.The later usually govern the final decision, and consequently influence the total cost of pipe material.

THE PIPE MATERIAL AND PROCESS

Selecting the right material in combination with the applicable process for the pipes has to be based on several factors, i.e. technical production and economic.

From the technical point of view the selected material has to posses corrosion resisitance properties which would enable the pump to have a long life in service. Existing materials vary in their degrees in resisting corrosion , depending inthe chemical composition of the sea water,and the velocity and the pressure of the pumped water inside the pipe . Therefore for every individual application , different selected materials will have different life expectancy.The final decision will involve a compromise between the initial cost and life expectency.

From the producability point of view, different materials can be processed using different manufacturing methods . The resultant quality , however, varies and this inturn influence the pipe service life .

From the economic point of view , many factors contribute to the resulted overall cost. In this particular application high cost materials can be more economic to use because of their higher

material utilisation and so on . Also materials differs in their machinabiltiy - materials of low machinability can take longer to machine during the finishing process and this may prove uneconomic in the whole.

- SHAFT LENGTH AND DIAMETER

The length of the shaft is decided upon simultenously as the pipe length is determined. As already discussed above the shaft diameter is a function of the maximum power transmitted by the shaft and the shaft material combied strength. The diameter of the shaft is also a function of the shaft length.

SHAFT MATERIALS AND PROCESSES

The shaft materials and applicable process can be selected on the same basis as discussed before. This time however the choice of materials are less, since that for sea water application only a stainless steel material can be used. The final selected material will depend on the raw material price, strength , machinability and or forgibility and its corrosion resistance.

C) Optimisation procedure

Taking into considerations the interlationship of all the above factors an optimisation procedure has been devised to arrive at the most economic combination of overall dimensions, materials and processes for the rising main pipes, line shaft and associated parts.

This is shown in fig(7.15).The figure shows that in order to arrive at the most economic solutions , a large number of alternative solutions are sought , evaluated and a cost figure is assigned to each of them . Each solution reprepresents a combination of a defined configuarations for the omponent under consideration, a selected material , a primary process and finishing process. this is carried out for each component in the sub assembly is isolation from or, when necessary , in combination with other components .

7.5.2 OPTIMISING DESIGN ARRANGEMENT FOR THE OTHER SUBASSEMBLIES OF THE PUMP

In a similar manner,to designing the rising main pipes and line

shaft subassembly , an optimisation procedure has been developed to decide on the design parameters of other subassemblies of the pump . This included pump bowls subassembly (i.e. bowls, diffussers, impellers) and water box subassembly (i.e. discharge bend, support structural and motor stool) . This is shown in figure (7.15). The figure shows that for the purpose of selecting a suitable materials for the pump bowls subassembly and pump water box subassembly the selected materials for pipes should be taken into considerations.

7.5.3 PROPOSALS OF ALTERNATIVE SOLUTIONS

In following the optimisation procedure a numerous number of alternative solutions can be arrived at, all at different manufacturing costs. The resulted number of alternative design arrangements will depend on the number of options which has been considered , i.e. materials , processes, etc.
As a result to the above ,several alternative solutions can be proposed to the customer which represent alternative design,materials and manufacturing arrangements of the pump at different prices. For instance the main proposals would be the optimum pump arrangements which would meet customer specifications interms of materials of construction . This particualr proposal , however , may not be an economic solution after all . Therefore as an alternative to the main proposals, the company can propose a more economic solution which would for instance include different types of materials ad so on . A third proposal could be the best technical alternative solution which would include the proposals of a techncally superior materials and manufactures processes to that of the main proposals.

7.5.4 DESIGN FINALISATION OF PUMP SUBASSEMBLIES

As a result of submitting the alternative priced technical proposals, if acceptable, the company should agree with the customer of a definite overall design arrangements at a pre-established price. This inturn should represent an objective to the company.
The final agreable price should be used as a basis to establish an overall target cost for the pump assembly . The latter should then

be broken down into individual subassemblies as applicable with each subassembly being assigned module target cost. This module target cost should be based on estimates established at the design optimisation stage. The designer draughtsman should then be given each subassmbly, with associated instructions and target cost, for final detailing before production stage. The instructions included with each subassembly should incorporate the folowing :-

- The component general configurations as arrived at during design optimisation stage .
- Materials of construction as agreed upon by the customer at bid proposal stage.
- The intended primary method of manufacturing
- The intended finishing method of manufacture.

Figs (7.16 to7.21) reviews typical design instructions for individual components.On the basis of the given instructions, the designer should proceed to finalyse the component design to enable it to be produced using the selected materials and manufacturing process within the allocated target cost. To enable the designer to achieve his task at this design stage, the folloiwng supporting services should be made available to him :-

- A cost estimator to confirm cost estimates of primary process and finishing process for individual components .
- A production engineer to assist in finalysing design details for manufacture.

7.6 RECOMMENDED FUTURE IMPROVEMENTS IN DESIGN AND MANUFACTURING AREAS:-

Providing that the market continue to exist certain improvements should be considered and implemented to ensure future cost effectiveness. These improvements should cover areas related to design , materials and manufacturing. These are summerised in fig(7.22)and discussed further.

Improvements in materials :-

Development in material technology is eminent in order to achieve cost effective materials with improved properties.
In developing new materials, certain properties should be achieved to ensure overall cost effectiveness and manufacturing economy .

These are as follows:-

- High corrosion resistance
- High mechanical strength .

In case of shaft materials this will allow smaller shaft diameters to be used with longer shafts and consequently with longer column pipes.

- Improved processbility to allow using economic primary processes such as centrifugal casting.In the case of manufacturing pipes ,this will improve material itilisations.
- Improved machinability , to economise in finishing processing cost.

Improvement in manufacturing

The main recommended area for improvement, is the development of the casting processes. processes such as static casting and cetrifugal castings can be more economic to used if they are developed in a way to allow thiner sections casting to be produced .Tis will allow less materials to be used for components parts such as column pipes, bowls , impellers, etc.

Other areas of improvement in manufacturing would be to invest in new plants and machines to reduce machining cost.

Improvement in Design

This should cover three different areas of design; hydraulic, mechanical and industrial .

From the hydraulic design point of view it has been established already that for a given pump duty , the higher the speed of the pump the smaller the pump would be . An improvement of pump bowl hydraulics for the entire range, to allow higher speeds to be used will directly contribute to the overall competitiveness of the pump range.

From the mechanical design point of view, a considerations should be given to improve subassmblies design features to allow economic manufacture.

These improvements can cover the following areas :-

- Methods of fastening column pipes to each other
- Methods of supporting line shaft. i.e. intermediate bearings housing design.

- Line shaft coupling and so on.

From the industrial design point of view , aconsideration should be given to standardise in the design and the number of main pump components used for the existing range . This should include the components such as , impellers bowls , discharge bends, bell mouths, motor stools.

Above improvements can be implemented all at once by considering overall redesign of existing range.

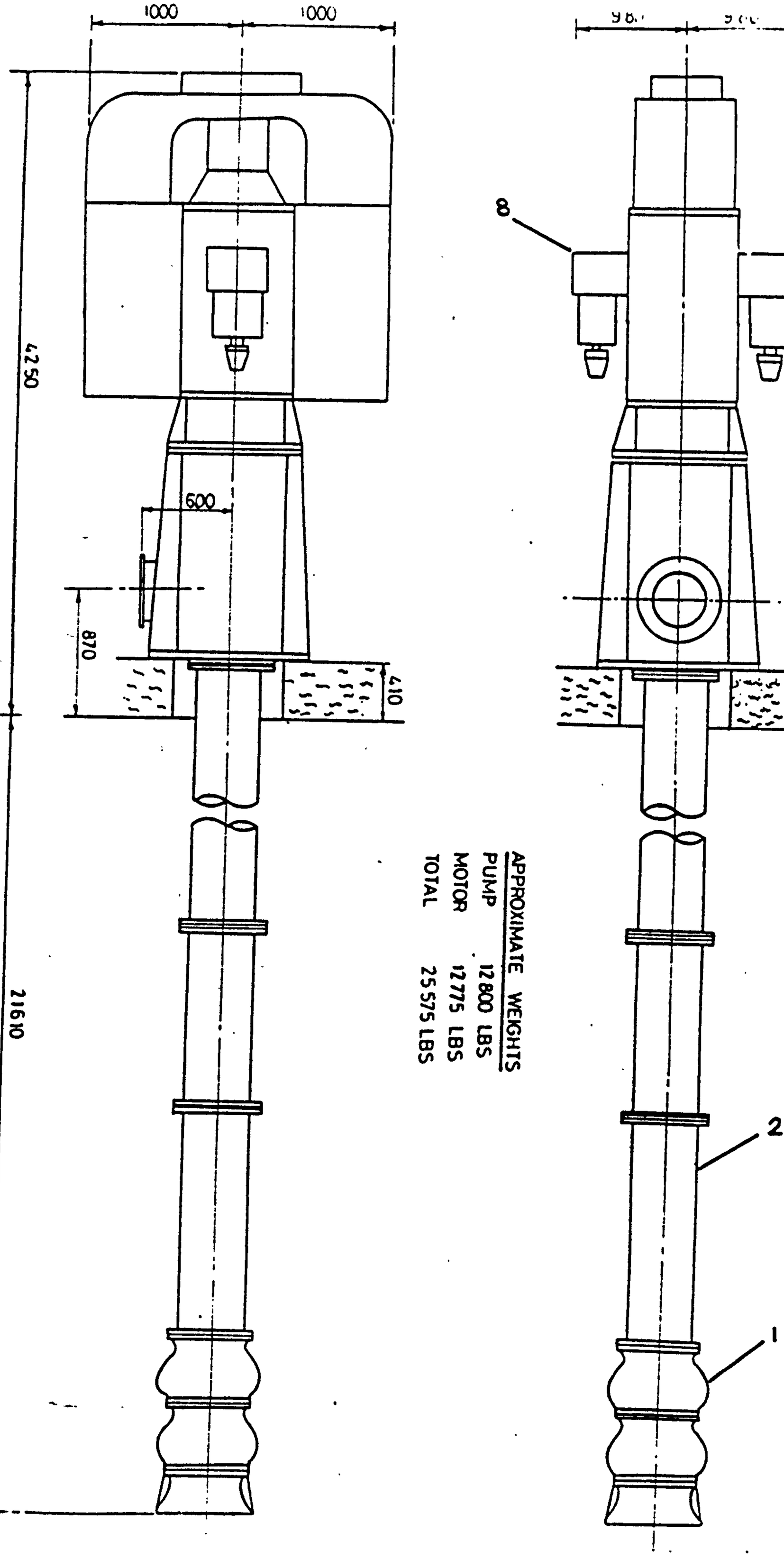

FIG(7.1) GENERAL ARRANGEMENT OF VERTICAL LONG-LINE SHAFT CENTRIFUGAL PUMP.

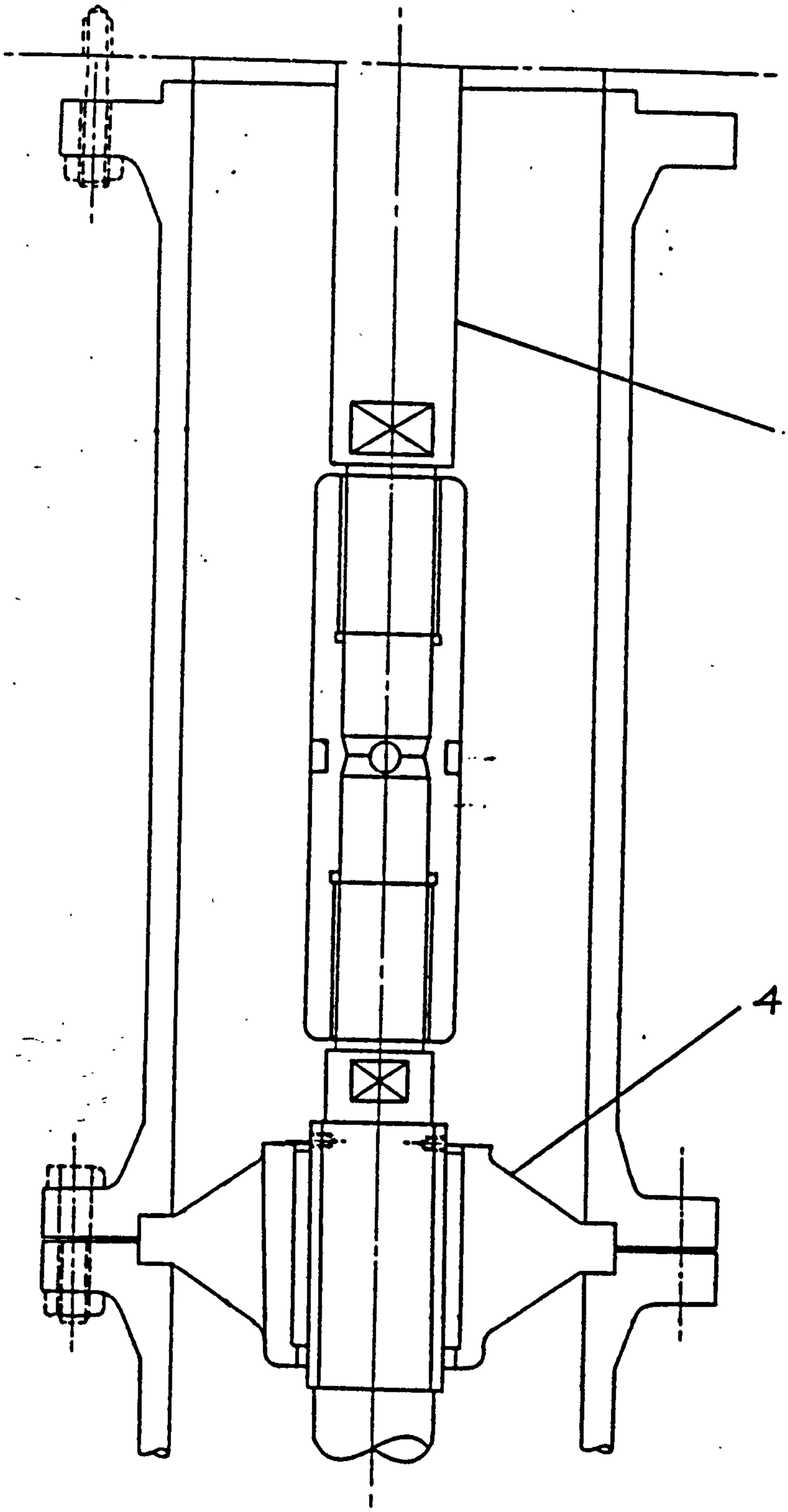

FIG(7.2) CROSS-SECTIONAL DRAWING OF RISING MAIN PIPE& SHAFT

FIG.(7.3) CROSS -SECTIONAL DRAWING OF PUMP BOWLS-DEFUSERS & IMPELLERS

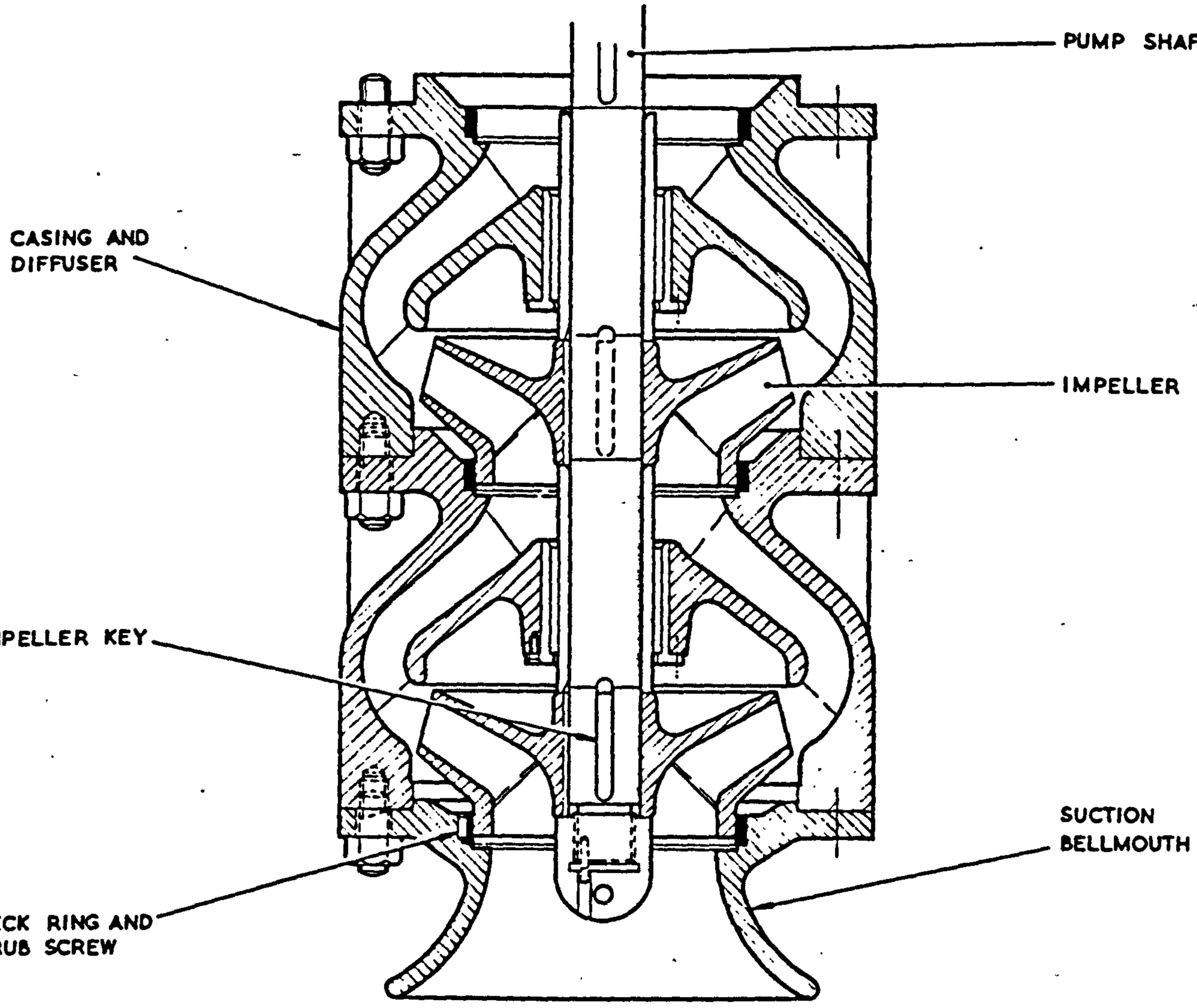

TYPICAL ARRANGEMENT OF UNBALANCED IMPELLERS

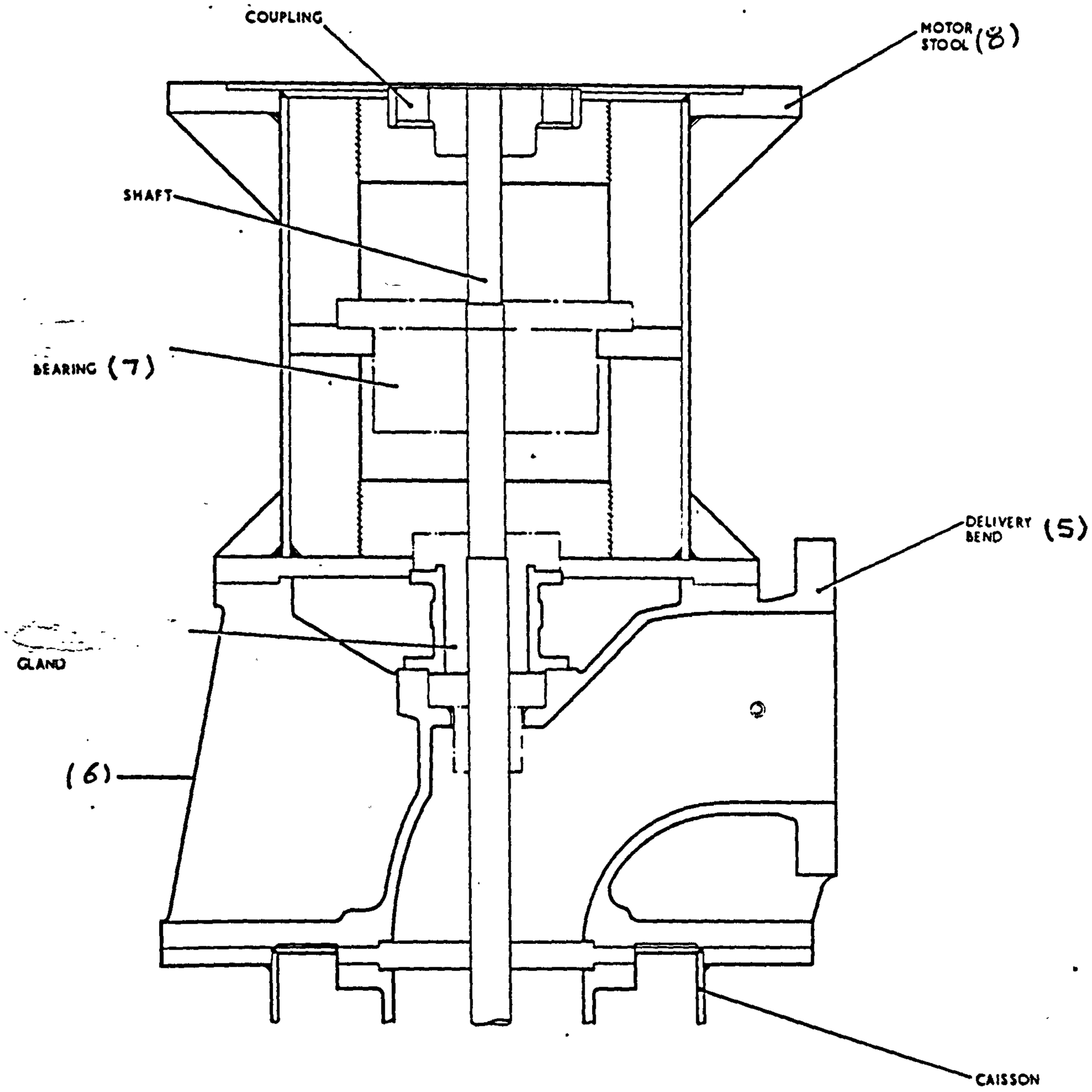

SECTION THROUGH HEADGEAR CNE. PUMP

FIG(7.4) CROSS SECTION DRAWING OF DICHARGE BEND AND SUPPORT STRUCTURE

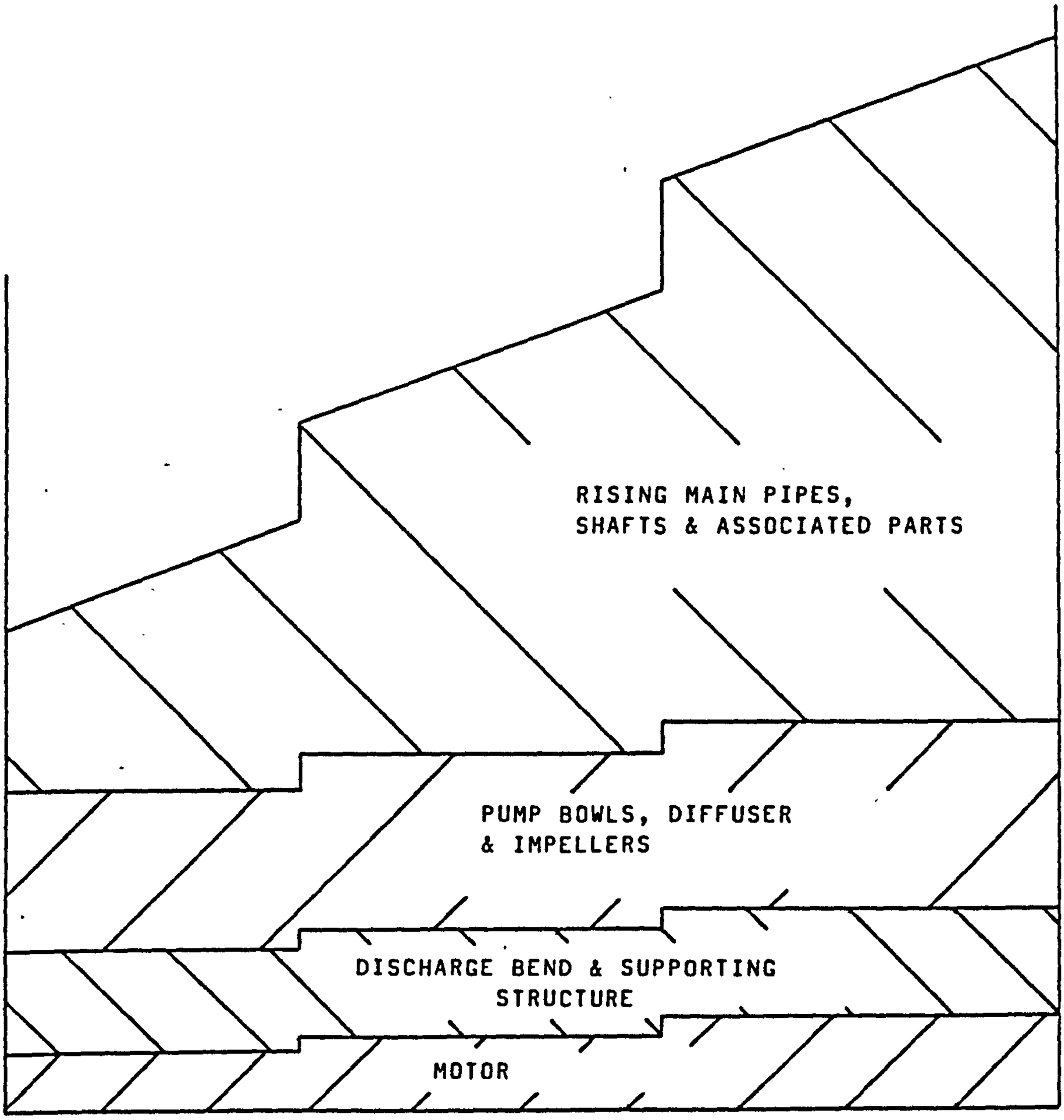

FIG(7.5) ANALYSIS OF COST OF MANUFACTURE OF PUMPS OF SAME DUTY (FLOW & HEAT) AND SAME MATERIALS OF CONSTRUCTION BUT DIFFERENT LENGTHS.

FIG.(7.6) MANUFACTURING COST DISTRIBUTION FOR PUMPS OF SAME SIZE BUT DIFFERENT MATERIALS OF CONSTRUCTION

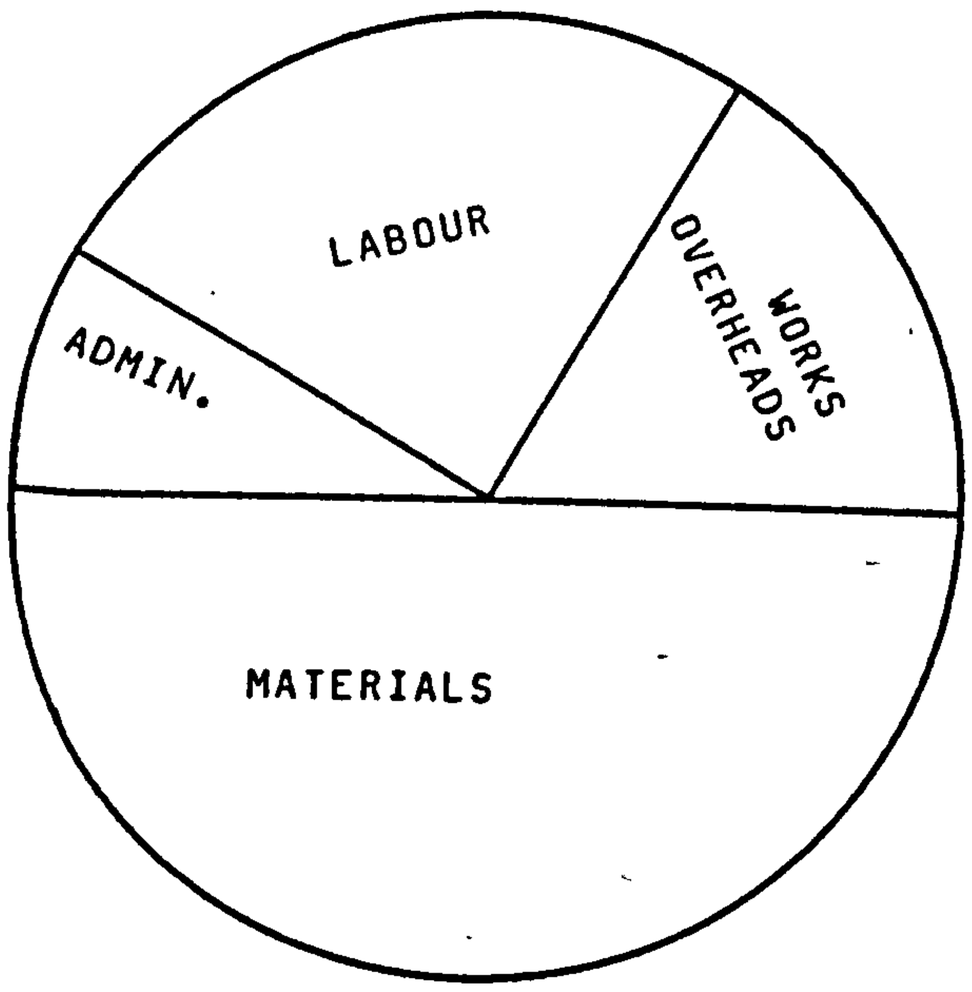

TYPICAL COST DISTRIBUTION FOR PUMP USING ALUMINIUM BRONZE MATERIAL FOR 90% OF PARTS.

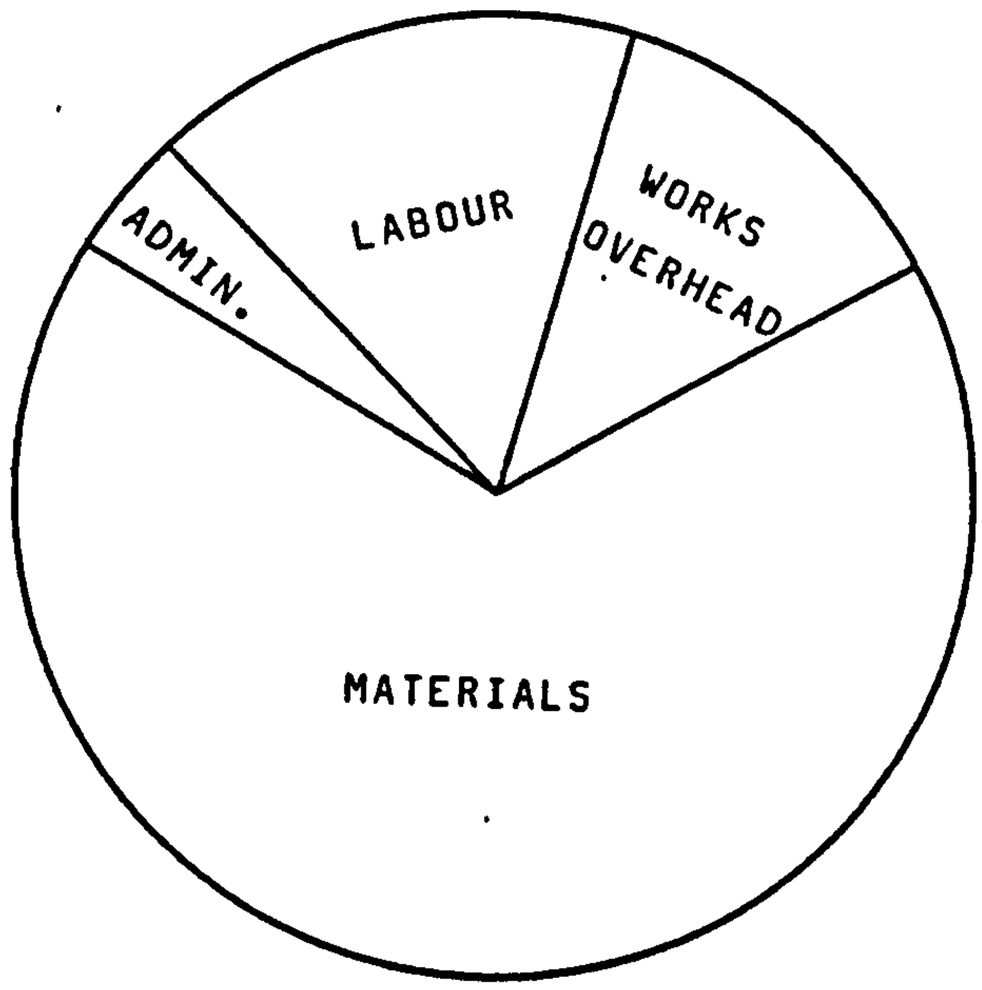

TYPICAL COST DISTRIBUTION FOR SAME PUMP USING STAINLESS STEEL MATERIALS FOR SAME PARTS.

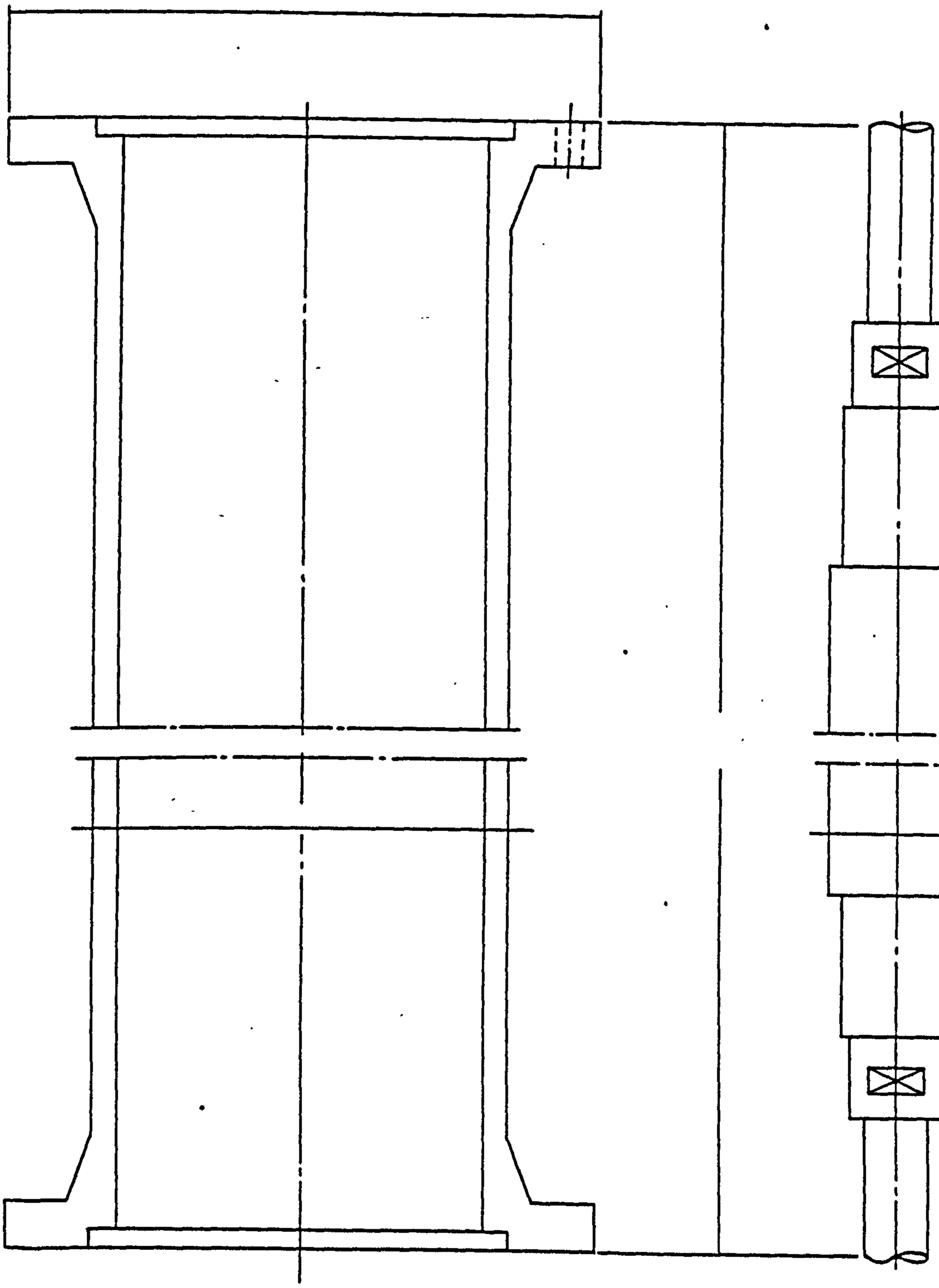

FIG.(7.7) MAIN DESIGN PARAMETERS OF RISING MAIN PIPE AND SHAFT

FIG.(7.8) RISING MAIN PIPE, MANUFACTURED BY DIFFERENT MATERIALS AND PROCESSES

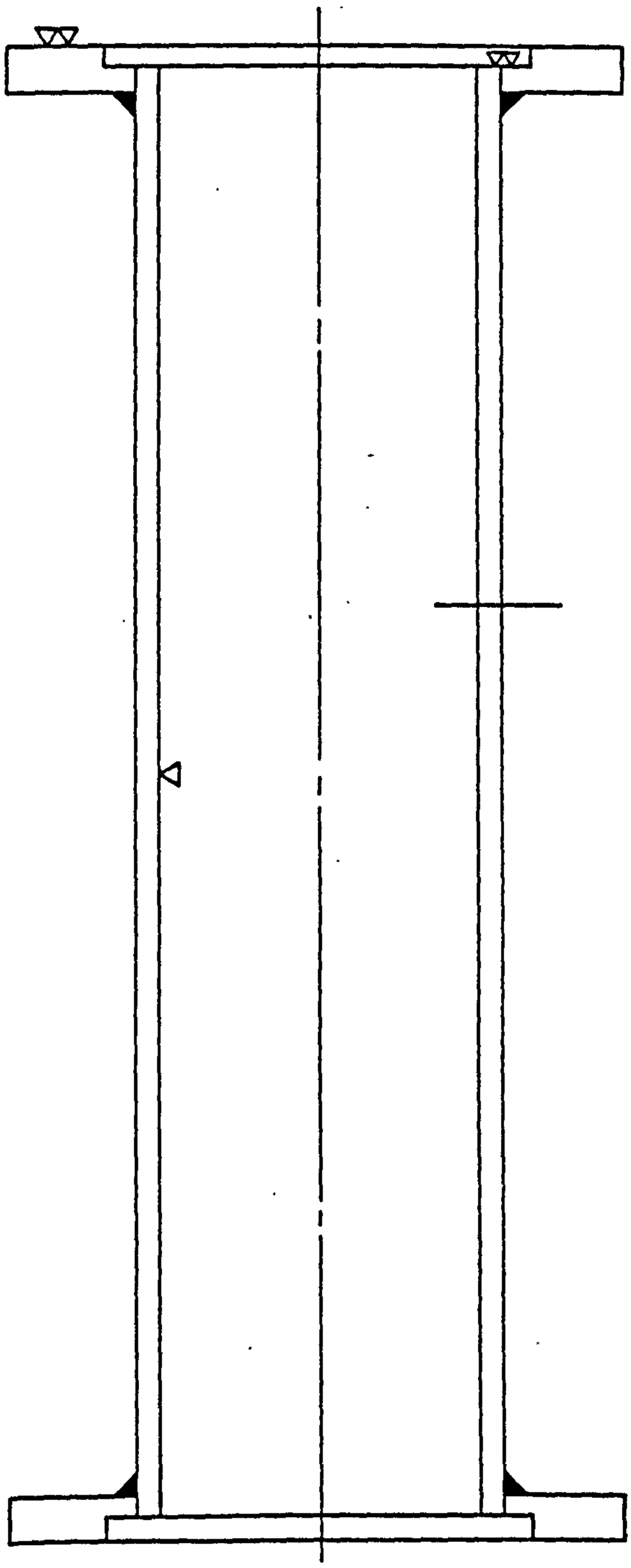

MATERIAL : DUPLEX STAINLESS STEEL (ZERON 25)
PRIMARY PROCESS: PIPE - CENTRIFUGALLY CAST
FLANGE-MACHINED FROM TUBE
AND WELDED ON

FINISHING PROCESS: MACHINE FLANGE FACE & RECESS
-ROUGH MACHINE PIPE BORE

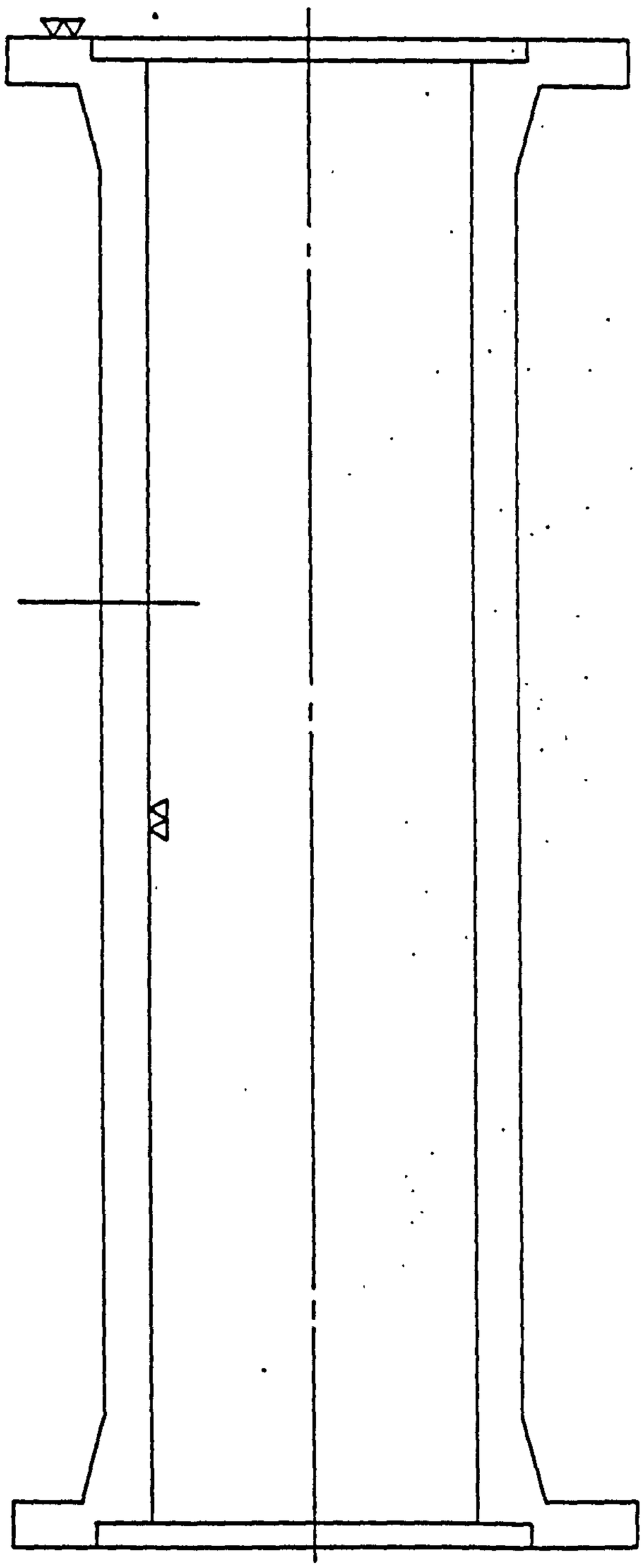

MATERIAL : 316 STAINLESS STEEL
PRIMARY PROCESS: PIPE & FLANGE:
STATIC CAST WITH INTEGRATED FLANGE

FINISHING PROCESS: MACHINE FLANGE FACE AND RECESS
- ROUGH & FINISH MACHINE PIPE BORE

8" N.B. TUBES

LENGTH OF PIPE	1.5M	2.0M	2.5M	3.0M
WEIGHT (KG)	83	104	125	147
PRICE EACH (METHOD A)	£455	£545	£575	£605
PRICE EACH (METHOD B)	£485	£595	£630	£660

10" N.B.TUBES

LENGTH OF PIPE	1.5M	2.oM	2.5M	3.0M
WEIGHT (KG)	101	128	155	181
PRICE EACH (METHOD A)	£550	£685	£725	£745
PRICE EACH (METHOD B)	£582	£730	£780	£805

12"N.B. TUBES

LENGTH OF PIPE	1.5M	2.0M	2.5M	3.0M
WEIGHT (KG)	130	163	196	228
PRICE EACH (METHOD A)	£630	£740	£880	£912
PRICE EACH (METHOD B)	£680	£795	£940	£980

MATERIAL ZERON 25 DUPLEX AUSTENITIC/FERRITIC STEEL,
SUITABLE FOR NORTH SEA APPLICATION.

FORM OF SUPPLY

METHOD (a) PIPES SUPPLIED AS A CENTRISPUM TUBE WHICH WOULD BE ROUGH MACHINED (?50 CI A) IN THE BORE, WITH AS-CAST OUTSIDE DIAMETER. WELDED TO THE PIPE AT EACH END, WOULD BE A ROUGH MACHINED FLANGE, WITH ALLOWANCE TO FINISH MACHINE AND DRILL ETC.

METHOD (b) PIPES SUPPLIES AS(a) WITH FLANGES WELDED, DRILLED AND FINISH MACHINED. COMPLETED PIPES THEN HYDROSTATIC PRESSURE TEST TO 30 BARS.
ALL PIPES 8MM WALL THICKNESS.
WELDING OF FLANGES TO BS.806 TYPE 6.
FLANGES WOULD BE THE PRODUCT OF CENTRISPUN TUBING.

QUANTITIES : 30 MIN. / 70 MAX.

TABLE (7.9) PRICES FOR SUPPLYING RISING MAIN PIPES IN DUPLEX STAINLESS STEEL MATERIALS CENTRI - FUGIALLY CAST

PRIMARY PROCESSES	STATIC CAST		CENTRIFUGALLY	ROLLED	FABRICATED	CENTRIFUGALLY
MATERIALS FOR SEA WATER APPLICATION	WITH INTEGRA FLANGES	WITH WELDED_ON FLANGES	CAST WITH WELDED -ON FLANGES	WITH WELDED ON FLANGES	SEAMED WITH WELDED ON FLANGES	CAST WITH INTERGRATED FLANGES
AUSTENETIC ALLOY (NI-RESIST)	*					*
COPPER ALLOY TIN BRONZE	*	*			*	*
ALLUMINIUM BRONZE	*	*			*	*
STAINLESS STEEL 316 (18cr)	*	*	*	*	*	
17/4(17r,4Ni)	*	*	*	*	*	
DUPLEX STAINLESS STEEL ZERON 25" (25cr,5Ni)	*	*	*	*	*	*

TABLE 7.10 :LIST OF MATERIALS AND MANUFACTURING PROCESS SUITABLE FOR CONSTRUCTING AND MANUFACTURING RISING MAINPIPES AND FLANGES.

TABLE(7.11) LISTS OF MATERIAL AND MANUFACTURING PROCESS FOR INTERMEDIATE SHAFT

MATERIALS FOR SEA WATER APPLICATION	PRIMARY & FINISHING PROCESS	
	FORGED & MACHINED	MACHINE FROM SOLID
STAINLESS STEEL		
410 (13cr,4Ni)	*	*
413 (17cr,2Ni)	*	*
316 (18cr)	*	*
MONEL		
K400	*	
K500	*	
DUPLEX STAINLESS STEEL"ZERON 25" (25cr,5Ni)	*	*

MATERIALS FOR SEA WATER / PUMP PART	NI-RESIST AUSTENETIC ALLOY	ALUMINIUM BRONZE	TIN BRONZE	STAINLESS STEEL				MONEL		BUPEIX STAINLESS		ZERALLOY
				410(13cr)	431 17cr-2Ni	316 18 cr	17cr/4Ni	K500	K400	Zeron 25	Zeron 26	
COLUMN PIPE	*	*	*			*				*	*	
SHAFT				*	*	*	*	*	*	*	*	
BOWLS	*	*				*	*			*	*	
IMPELLERS	*	*	*	*		*	*			*	*	
CASE WIRING				*			*					*
IMP. WIRING				*			*					*
SHAFT SLEEVES				*			*					
DISCHARGE BEND	*	*		*		*	*			*	*	

TABLE7.12 LISTS OF SUITABLE MATERIALS FOR VARIOUS PARTS OF PUMP.

TABLE (7.13) -FACTORS INFLUENCING THE COST OF MANUFACTURING THE COLUMN PIPE

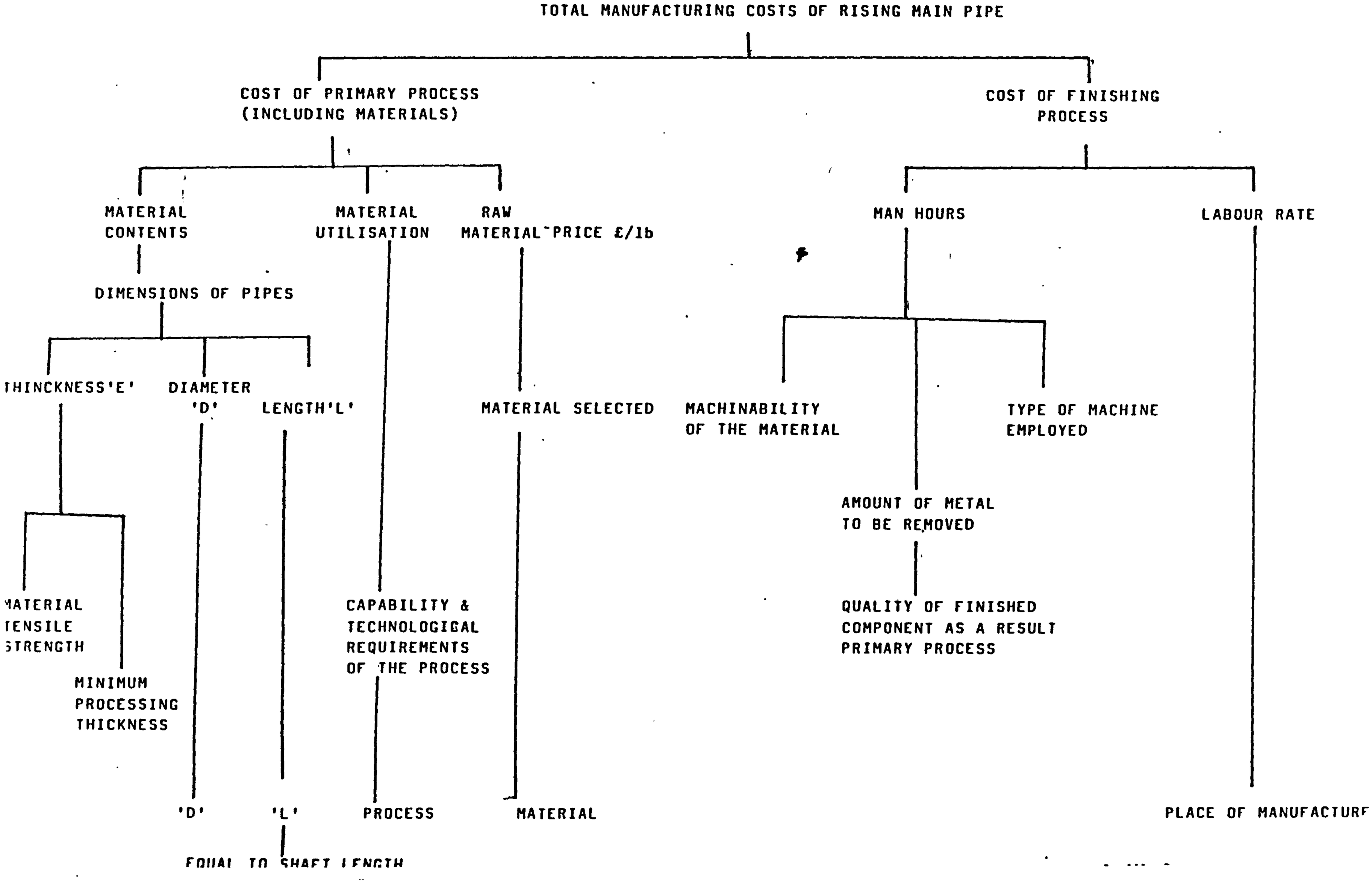

FIG(7.14) ALTERNATIVE ARRANGEMENTS FOR COLUMN PIPES AND INTERMEDIATE SHAFTS FOR SAME PUMP DUTY AND LENGTH

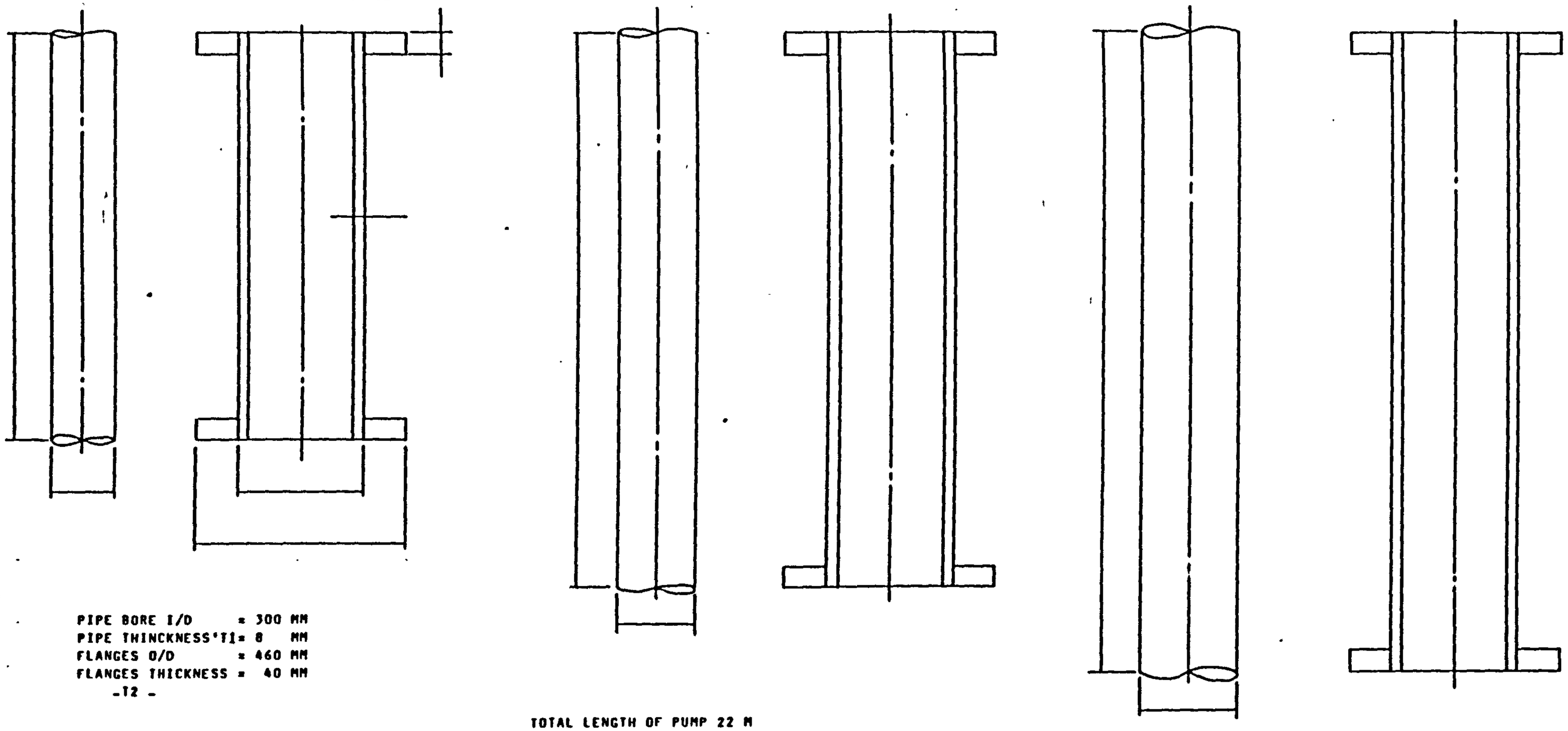

PIPE BORE I/D = 300 MM
PIPE THINCKNESS'T1= 8 MM
FLANGES O/D = 460 MM
FLANGES THICKNESS = 40 MM

TOTAL LENGTH OF PUMP 22 M

ALTERNATIVE	COLUMN PIPES				SHAFTS				
	NO. OFF	LENGTH (M.M)	EST WEIGHT (KG) EACH		TYPE	NO. OFF	LENGTH (M.M)	DIA (M.M)	EST WEIGHT (KG) EACH
1	9 1	2286 247	195 75		INT TOP	9 1	2286 1347	84 84	98 58
2	8 1	2438 1314	205 140		INT TOP	8 1	2438 2414	102 102	155 153
3	7 1	2743 1618	220 155		INT TOP	7 1	2743 2718	127 127	270 267

DECIDE ON PUMP HYDRAULIC

ALT.PUMP HYDRAULICS

OPTIMISE COLUMN &SHAFT MATERIALS,DESIGN &MAN.PROCESS

FOR E ACH SELECTED HYD.DESIGN

OPTIMISE MAT. & PROC.FOR IMPELLER & ASS.PARTS

SELECT COLUMN PIPE MATERIAL

TAKE INTO CONSID. COLUMN MAT.

SELECT SHAFT MATERIAL

OPTIMISE SHAFT. MAT.,SHAFT& COLUMN ARRNGTS &MAN.PROCESS

ALT. MATERIALS FOR SEA WATER

OPTIMISE MAT. &PROC. FOR DISH.BEND, SUPPORT STRUC &ASS.PARTS

OPT.MAT& PROC. FOR PUMP BOWLS &ASS. PARTS.

SELECT MAT. FOR PUMP BOWLS

ALT. MAT. FOR SEA WATER

SELECT MAT. FOR IMPELLER

ALT. MAT.FOR SEA WATER

MAX. SHAFT & COLUMN LENGTH

MIN.SHAFT&COLUMN LENGTH

FOR SELECTED SHAFTS COLUMN MAT. DECIDE ON SHAFT&COLUMN POSS.ACT.ARNGTS

FOR SELECTED SHAFT MAT. & LENGTH

FOR SELECTED COLUMN MAT. & LENGTH

OPTIMISE MAN. PROC.FOR SHAFT. OPTIMISE MAT.& PROC.FOR ASSOC. PARTS ON COST BASIS

OPTIMISE MAN. PROC.FOR COLUMN AND ASS.PARTS

SELECT MAT. FOR DISCH.BEND AND SUPP.STRUC.

OPT.MAT. & PROC. FOR SUPPORT.PLACE

OPT. MAT. & PROC. FOR MOTOR STOOL

ALT. MAT. FOR SEA WATER.

FOR EACH SELECTED MAT.

FAB.&MACH

CAST&MACH.

FAB.&MACH

USE COMPATIBLE MAT.

USE SAME MAT.

OPT.MAT & PROC. FOR BOWLS BRNG BUCHES

OPT. PROC. FOR BOWLS WEAR RING.

OPT. PROC. FOR BOWLS.

OPT.PROC FOR IMPELLER

USE COMPATIBL MAT. FOR WEAR

USE COMPATIBLE MAT. USE SAM MAT.

DECISION COMPATIBLE MAT. &PROC.FOR SHAFT SLEEVE.

USE SAME SHAFT MAT.AND DECIDE ON PROCESS FOR COUPLING.

SELECT AN OPTIMUM PROC. FOR SHAFT

DECISION MOST ECONOMIC PROCESS FOR INT. BRNG

DECIDE ON MOST ECONOMIC PROC. BRNG.HOUSING

DECIDE ON MOST ECONOMIC PROC. FOR PIPES.

OPT. PROC. FOR MAKE UP PIECE

OPT. PROC. FOR STUFF .BOX,GLAND & BUSH

OPT. PROCE FOR DISCH BEND &

ALT.MAT.FOR SEA WATER

CAST & MACHINE

MACH.FROM SOLID

SAND CAST

SHELL MOULD

ALT. MAT. FOR SEA-WATER.

MACH

MUFF.

COUP.

FORGE

SCREW COUPLING

MACHINE

SAND CAST & MACHINE

MACHINE FROM TUBE.

FORGE & MACHINE

MACHINE FROM ROLLED BAR

CAST & MACH.

MACH. FROM SOLID TUBE

SAND CAST & MACHINE

SHELL MOVED & MACHINE

SAND CAST & MACHINE

CENTRI SPUN

ROLLED

FABRICATED

CAST & MACH.

FAB.&MACH.

STUFF BOX

GRAND

BUSH

SAND CAST & MACH.

SHELL MOULD & MACH.

CAST BEND & FAB. STRUC.& MACH.

CAST BEND & STRUC.

FAB.BEND&STRUC

ALT.MAT.FOR SEA WATER

CAST & MACHINE

MACHINE FROM TUBE

SAND CAST & MACHINE

SHELL MOULD & MACH.

ALT. MAT. FOR SEA WATER

OPTIMISE PF

MACH. FROM TUBE.

SAND CAST AND MACHINE.

FIG (7.16) PROPOSALS FOR TYPICAL DESIGN INSTRUCTION SHEET FOR COLUMN PIPE.

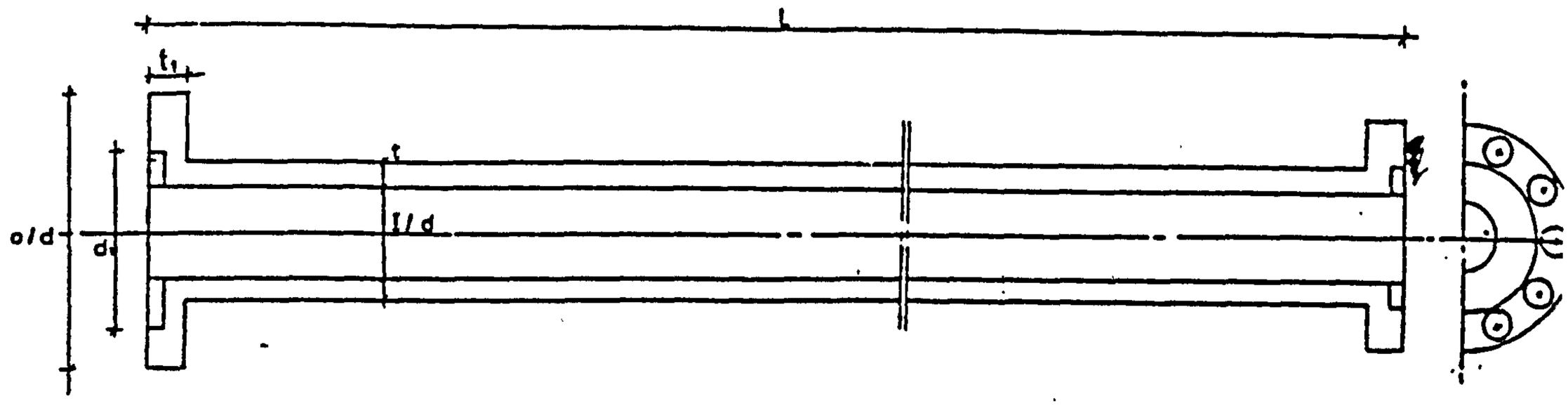

TARGETS COST: £ 885.00

DESIGN PARAMETERS:

LENGTH L : £2284 MM.

NOMINAL BORE I/D : 300 MM

THINCKESS'E' : 8 MM

FLANGE O/D : 457 MM

FLANGE THICKNESS'T': 40 MM

NO. HOLES : 10

DIAM. HOLES : 25 MM DIA

WEIGHT : 145KG.

PRODUCT PARAMETERS

PRIMARY PROCESS:

PIPE: ZERON 25" CENTRISPUN
FLANGE: MACHINED FROM TUBE AND WELDED ON.

FINISHING PROCESS:
ROUGH MACHINE SORE
FINISH MACHINE FLANGE FACE & RECESS
INFORMATION TO BE COMPLETED BY THE DESIGNERS:

TOLERANCES:
SPEED & FEEDS:
MACHINE TOOL:

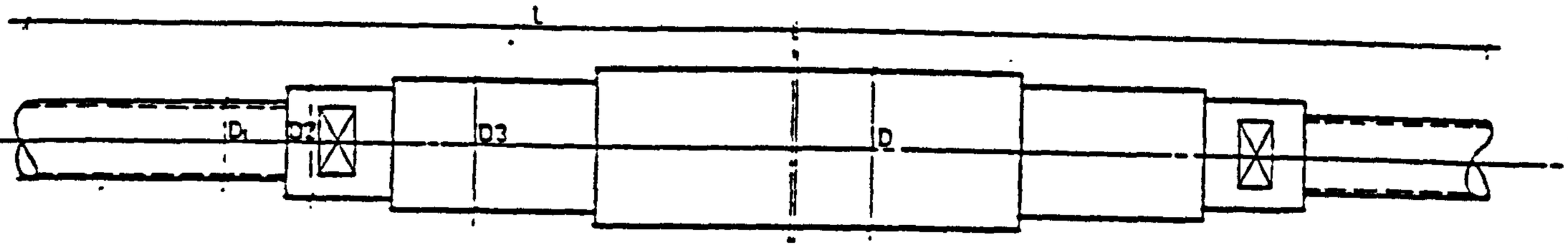

TARGET COST : £ 550.00

DESIGN PARAMETERS:

LENGTH 'L' : 2284 MM
DIAMETER 'D': 84 MM.

PRODUCTION PARAMETERS

MATERIALS : MONEL K 500
PROCESS : FORGING & MACHINING

INFORMATION TO BE COMPLETED BY THE DESIGNER:

D1 :
D2 :
D3 :
TOLERANCES :
SURFACE FINISH:
MACHINE TOOL :

FIG (7.17) PROPOSALS FOR TYPICAL DESIGN INSTRUCTION SHEET FOR DESIGNER

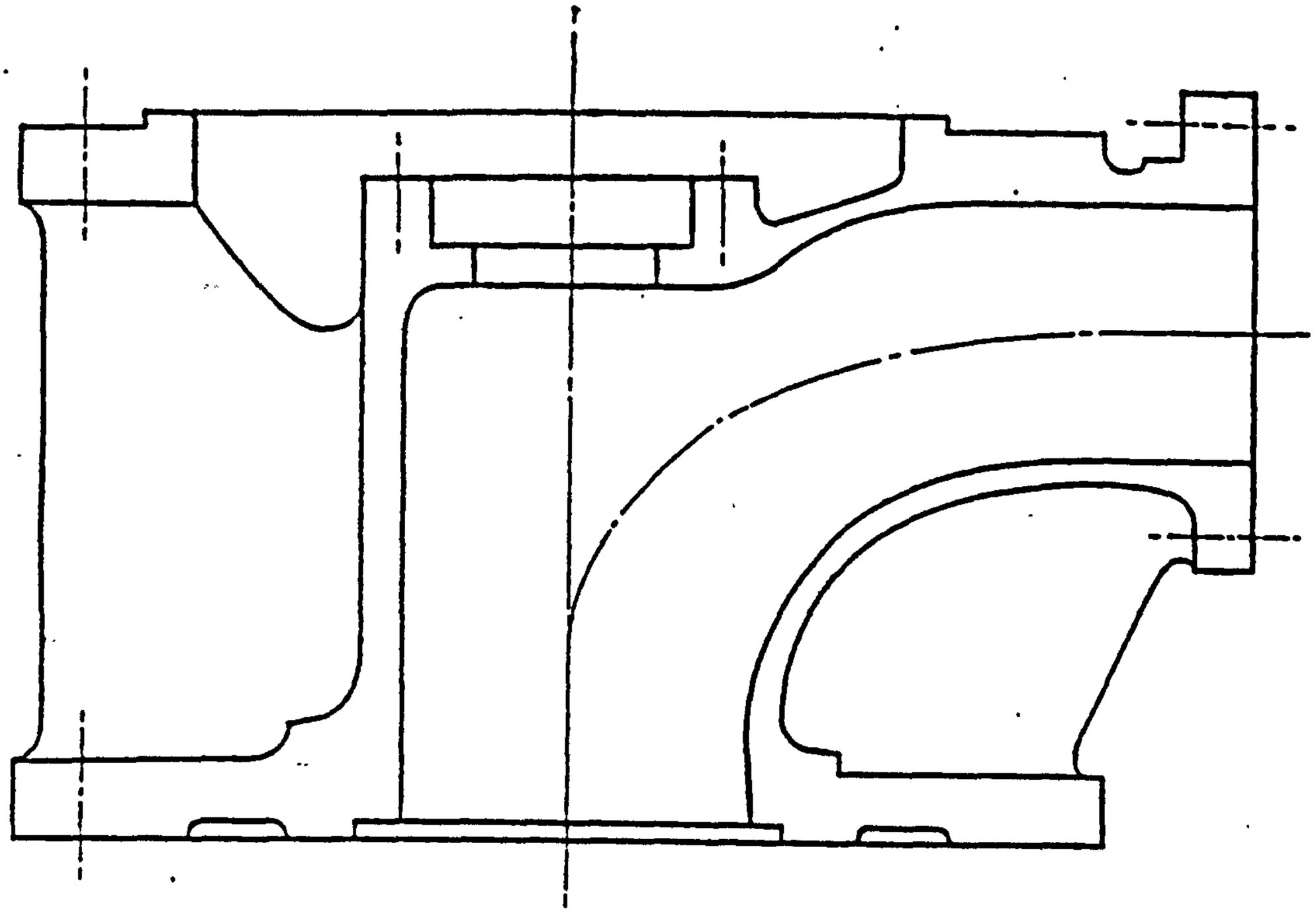

TARGET COST : £ 2200.00

DESIGN PARAMETERS

USE STANDARD BYDRUALIC DESIGN
FOR 12" X F PUMP

PRODUCTION PARAMTERS

BEND:- STATIC CASE ALUMINIUM BRONZE

SUPPORT STRUCTURE: FABRICATED MILD STEEL AND MACHINING

INFORMATION TO BE COMPLETED BY
DESIGNER:

OVERALL DIMENSIONS
TOLERANCES

FIG(7.18) PROPOSALS FOR TYPICAL INSTRUCTION SHEET FOR DISCHARGE BEND AND SUPPORT STRUCTURE.

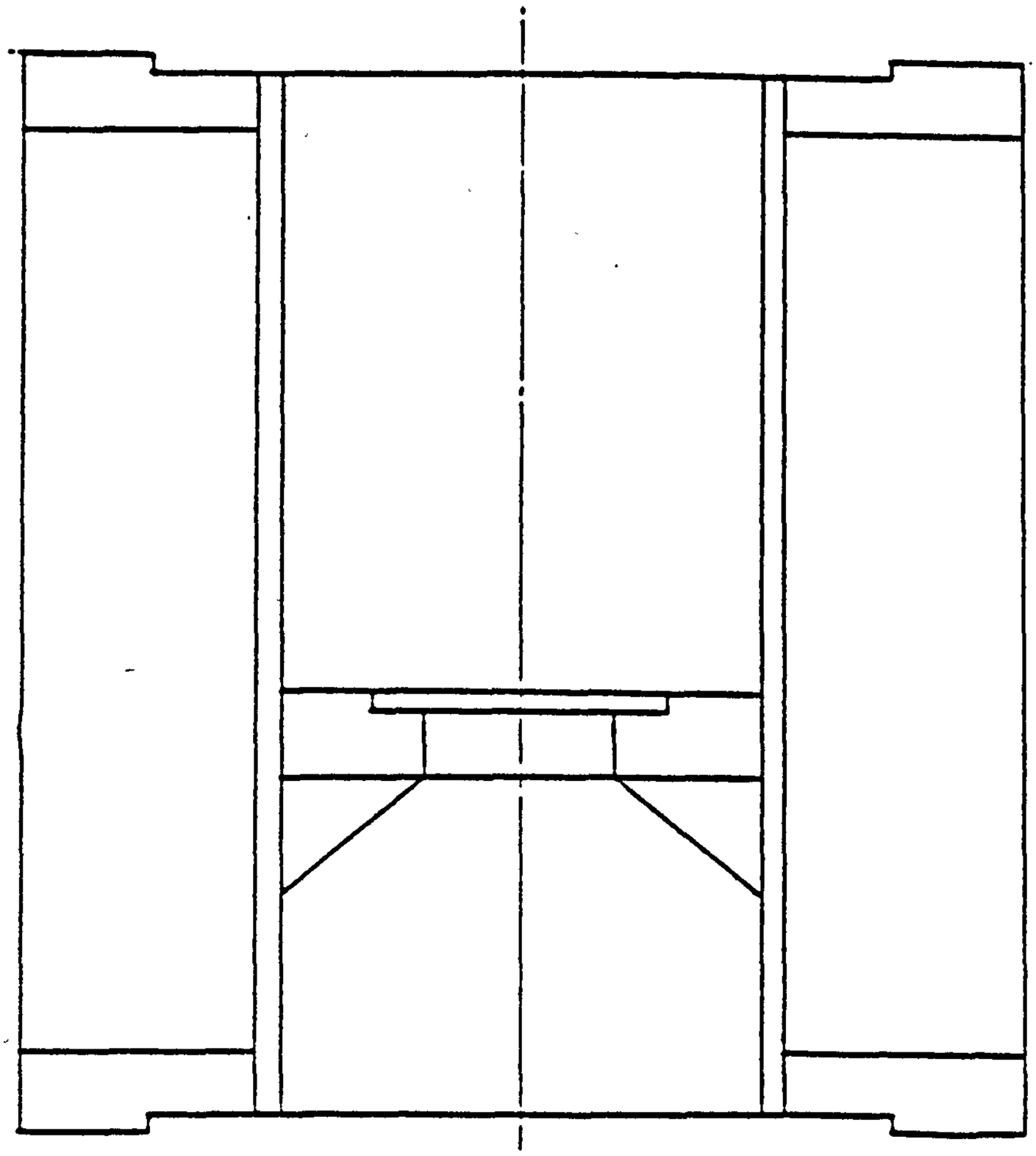

TARGET COST : £ 3200.00

DESIGN PARAMETERS

USE STANDARD MOTORSTOOL DESIGN
SUITABLE FOR 12" x F PUMP

PRODUCTION PARAMETERS

FABRICATED MILD STEEL
& MACHINING

INFORMATION TO BE COMPLETED BY DESIGNER:

OVERALL DIMENSION
TOLERANCES

FIG (7.19) PROPOSALS FOR TYPICAL DESIGN INSTRUCTION SHEET FOR MOTOR STEEL

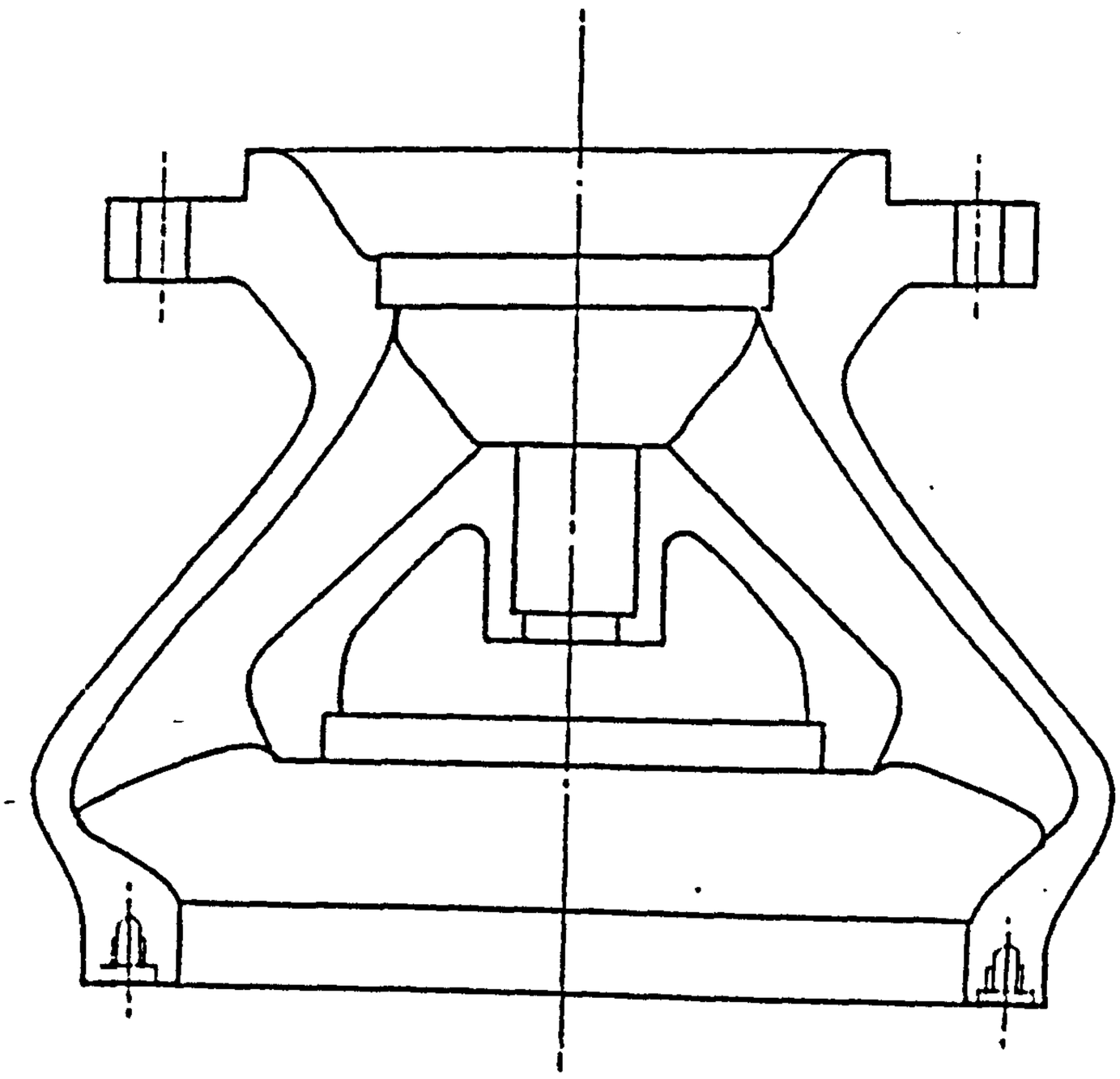

TARGET COST . £ 350

DESIGN PARAMETERS:

USE STANDARD BOWL & DIFFUSER DESIGN
FOR 12" X F PUMP

PRODUCTION PARAMTERS:

BOWL & DIFFUSER : STATIC CAST NI-RESIS
& MACHINE

INFORMATION TO BE COMPLETED BY DESIGNER

OVERALL DIMENSIONS
TOLERANCES

FIG.(7.20) PROPOSALS FOR TYPICAL DESIGN INSTRUCION SHEET FOR PUMP BOWL & DIFFUSER

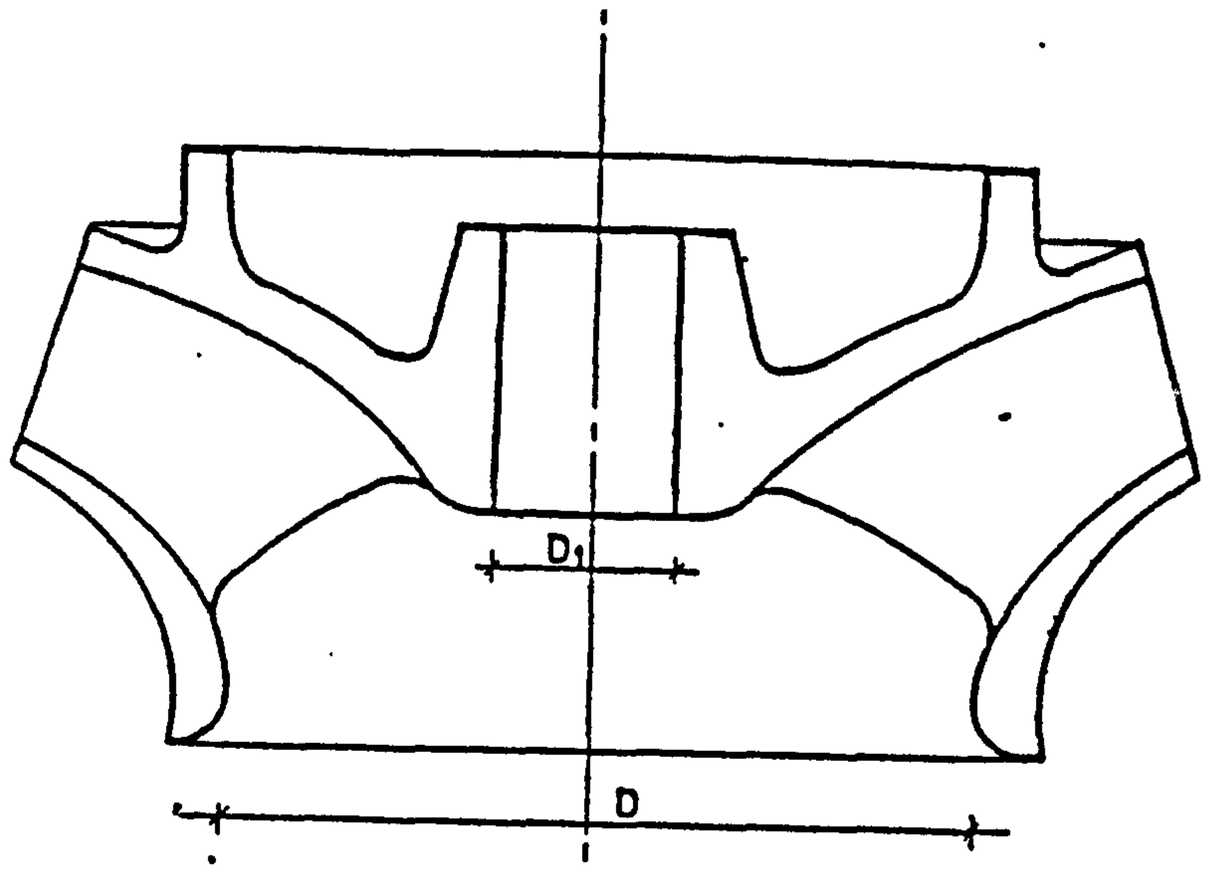

TARGET COST : £ 520.00

DESIGN PARAMETERS

USE STANDARD IMPELLER DESIGN FOR
12" PUMP - TURN DOWN IMPELLER

PRODUCTION PARAMTERS

NI-RESIST STATIC CAST - (CERAMIC CORE)
& MACHINE

INFORMATION TO BE COMPLETED BY DESIGNER

IMPELLER DIAMETER (FOR DUTY)
TOLERANCES
SURFACE FINISH

FIG(7.21) PROPOSALS FOR TYPICAL DESIGN INSTRUCTION SHEET FOR IMPELLERS.

DESIGN /MANUFACTURING IMPROVEMENTS

FOR ECONOMIC MANUFACTURE

MATERIALS

IMPROVED METALLURGICAL TECHNOLOGY SHOULD BE SOUGHT TO ACHIEVE COST EFFECTIVE MATERIALS WITH AN IMPROVED PROPERTIES COMBINATION AS FOLLOWS:

-IMPROVED CORPORATION RESISTANCE PROPERTIES SUITABLE FOR SEA WATER .

_HIGHER MECHANICAL STRENGTH THIS IS IMPORTANT SPECIFICALLY FOR SHAFTS TO ALLOW SMALLER SHAFT DIAMETERS TO BE USED WITH LONG COLUMN PIPES

_CAPABLE OF BEING PROCESSED BY COMPATIBLE AND ECONOMIC PROCESSES (SUCH AS CENTRI-FUGAL CASTING, IN CASE OF PIPES).

_IMPROVED MACHINABILITY TO ALLOW LESS MACHINING TIME.

MANUFACTURING

TECHNOLOGY

DEVELOPMENT IN CASTING PROCESSES(I.E.CONTRI-CAST, STATIC CAST-ETC) TO ALLOW THINER CASTING SECTION 5 TO BE ACHIEVED WHICH WILL ALLOW LESS MATERIALS TO BE USED WITHFINAL CASTING AND CONSEQUENTLY MORE ECONOMIC CASTINGS. THIS SHOULD APPLY TO PIPES BOWLS,IMPELLERS..ETC.

PLANT

-NEW MACHINE TOOLS TO FINISH MACHINE COMPONENTS SUCH AS PIPES & SHAFTS.

-NEW PROCESS PLANNING AS A A RESULT OF WORK STUDY.

DESIGN

HYDRAULIC

NEW IMPROVED BOWL HYRAULICS SHOULD BE SOUGH TO ALLOW PUMPS TO ROTATE AT A HIGHER SPEED AND CONSEQUENTLY RE-DUCE PUMP SIZE.

INDUSTRIAL

STANDARDISE IN MAJOR PUMP COMP-MENT TO COVER THE RANGE WITH MINIMUM NUMBER OF COMPO-NENTS SUCH AS IMPELLERS BOWLS DISCHARGE BEND BELL MOUTH MOTOR STOOLS

MECHANICAL & ENGINEERING

IMPROVE DESIGN FEATURES FOR PUMP SUBASSEMBLIES SUCH AS:_

-METHOD OF FASTENING COLUMN PIPES TO EACH OTHER.

-METHOD OF SUPPORTING LINE SHAFT(I.E. BEARING HOUSING DESIGN -ETC).

-LINE -SHAFT COUPLING

-WEAR RING FIXATION

TO BE IMPLEMTED ON ENTIRELY NEW PUMP RANGE DESIGN TO COVER FUTURE.

FIG(7-22)SUGGESTED AREAS FOR FUTURE IMPROVEMENT FOR LONG LINE SHAFT PUMPS.

CHAPTER (8)

A STRUCTURED APPROACH TO DESIGN FOR ECONOMIC MANUFACTURE

8.1 I N T R O D U C T I O N

As a result of the Value Engineering Literature survey ; chapter (3) and the Industrial Survey Chapter (4) , it was initially concluded that in order to achieve maximum product economy , the engineering organisation would have to effect progress in two major areas as follows:

(A) Arriving at an optimum way to manufacture and accordingly design products, to meet product requirements at minimum possible cost.

(B) Providing a means of product cost control , to ensure that product manufacturing cost are kept within acceptable limits which can be withstood by the market.

It was also concluded from the Survey that , although the organisation management have adopted certain philosophies towards achieving the above tasks, further progress in these areas , in terms of establishing more formal approaches, would be essential to meet the growing need of minimising the manufacturing costs.

The case studies , chapters(6) and (7) have been concerned with establishing functional and econmical factors affecting the cost of manfacturing as well as establishing factors influencing the decision making process at product design stage . They did not however, discuss the designer approach to component /product design in details .

In this Chapter , using the results of the foregoing surveys and studies , an attempt is made to develope a model for an improved organisation and technical arrangements to assist the engineering organisation achieving its tasks in relation to design for economic manufacture.

Two main points are discussed in details as follows :

(a) The need for a continuous design manufacture interaction as a means to achieve maximum product economy .

(b) The significance of employing rational means to product cost control as a means to improve company profitability.

These are furthered discussed in the following sections.

8.2 THE NEED FOR A CONTINUOUS DESIGN MANUFACTURE INTERACTION AS A MEANS TO IMPROVE PRODUCT ECONOMY:

In this section the influence of product design on product manfacturing costs is discussed with a view to highlight the design areas which contribute mostly to the cost. This is used to analyse and identify the ideal and necessary action required by the designer to minimise component manufacturing costs.
Similarly , the effect of improving the manufacturing strategies on the cost is reviewed to highlight the areas in product manufacturing of most interest to the design functions.
As a result of the analysis it is concluded that the interaction of the design and manufacture functions is necessary to achieve the required product economy. To influence this interaction to take place, however, an improved manufacture design interface has to be effected.

8.2.1 THE INFLUENCE OF PRODUCT DESIGN ON PRODUCT MANUFACTURING COSTS :-

The relationship between the product manufacturing costs and the product design exists at two levels; product design level and component design level .
At the product design level , i.e. assembly / subassembly level, the cost of manufacture will be directly related to the complexity of the design . Complex design means more parts involved and consequently more tooling, setting up, planning , material handling ...etc.
However, it is difficult to establish or quantify such relationship in general terms and it is therefore not intended to discuss this point any further within the scope of the present work.
At the component design level the relationship of cost to design can somehow be estbalished. This is discussed in some details in this clause . To help establishing the influence of component design on cost, the economics of materials and processes is first discussed.

(A) ECONOMICS OF MATERIALS :-

The selection of components materials influence the cost of manufacture in three ways:-

Initial cost :

This represents between 40% - 60% of total component manufacturing costs.

Return on investment

Approximately half the capital spent on plant and machinery in engineering goes into machine tools, for shaping and processing of materials into useful products. The efficiency with which these can , in principle, be utilised is entirely limited by the manufacturing properties of the materials being processed and by the charateristics of the available tooling mateials. If for instance machining rates could be doubled the need to invest capital in metal cutting machine tools would be drastically reduced.

Indirect overhead

A significant proportion of the capital available to industry is absorbed by stockholding and by work-in-progress. From this point of view too, the economic performance of industry is dependent on materials, making it desirable to relationalise specifications, shapes and sizes and to keep unit costs to a minimum and to those materials which can be shaped with a minimum number of operations. The selection of materials for any design application depends in two factors:

- The application / enduse, i.e. strength , design life, corrosion resistance ..etc.
- The intended method of manufacture

The above two factors influence the chemical composition of the selected materials.

The final material costs however, can interact with the process cost.

A relatively small difference in initial material costs can be amplified into large difference in final product costs as a consequence of related differences in processing costs.

The final cost of the component will depend upon

- Material initial cost
- Material utilisation
- Processing cost

The final two elements of cost can interact and this inturn is influenced by the material as well as the process employed.

(B) CAPABILITIES AND ECONOMICS OF THE PROCESS

The main thesis of achieving economic design is based on the fact that manufacturing processes posses different capability and have different economics.

Process capabilities

This can be best expressed in terms of types and forms of materials which can be worked by the processes, size, shape and intricacy of components which can be produced and surface finish & tolerances which can be achieved by this process.

It is right to say that different manufacturing processes have different capabilities and consequently will be capable of handling different range of components, i.e. components designs. It is eqaually right to state that processes overlap in their capabilites. Except in very special cases, almost every component design will be capable of being manufactured or finished by more than one process. It is therefore, for his reason , that the designer is faced with the task of selecting a suitable manufacturing in process for his design.

The absolute boudries of the manufacturing process or its boundries with other processes can be represented by differnt means.

Process economics

This can be best expressed interms of rate of production , cost of tooling ,

labour cost and material utilisation. Process vary considerably in their economics.

The process technological requirements (limitations)

Like their capabilities, processes have their limitations. These can be defined as " the phisical factors , both internal and external that has to be secured to directly influence and ensure the successful processing of the component part. i.e. transfering it from its initial form of raw materials to its final required form of size, intricacy and accuracy by this process;-

In order to meet the technological requirements of the process, certain design considerations has to be taken into account by the designer when finalising he component design. These are applcable more to metal forming processes such as hot forging and casting .

Process economical requirements

These can be defined as the factors that has to be secured to ensure the economical processing of the component by the process

under consideration . i.e. to minimise the involvement of tooling , labour , processing time..etc. which is necessary for the completion of the component to the prestablished specifications.

(C) THE INFLUENCE OF COMPONENT DESIGN ON MANUFACTURING COSTS

There are several areas in which component design can directly influence the manufaturing cost, the following are the important ones:-

(1) Influence of material selection on the overall component manufacturing costs :

The cost of processing the material can be relatively high comparing with the initial purchasing cost, if the material selected was not compatible with the employed manufacturing methods. It is therefore always necessary that the designer select the material to suit the design requirements as well as the process.

The following are few examples to illustrate the above point.

- For similar designs, steel parts cost less than aluminium alloys. However the time required for machining the steel is three times as much that required for machining alluminiuim.
- Should a design be most adaptable for production on one of the variouautomatic lathes, screw machines or target lathes the primary consideration must be free machining . If low machinability materials must be used then thoughts must be given to producing the part by means of another process where machinability which so necessary for turning operations is not a factor.
- Where design requirements allow little or no flexibility as to material selection the design will be influenced directly by the production method by which material can be worked.

As in the case of manufacturing of turbine engine blades, because of high temperature resistance material used these blades can not be machined. The employed process, therefore, should include little or no machining .

- Where heat treatment or hardening are found to be necessity, careful considerations should be given to the selected materials and its adabtability to processing prior to heat treatment. Where close accuracy must be maintained and varation from heat treatment distortion is a possibility, materials which offer good machinability following heat treatment have to be utilised.

(2) THE INFLUENCE OF UNECESSARY DESIGN CONFIGURATIONS ON THE EMPLOYMENT OF INCOMPATIBLE , UNECONOMIC PROCESS :

On the basis of given design configurations and intrustions, a production process, or production route, will have to be employed . The process, or route, within its capabilities boudary it allows the production of the given component part at a maintained quality and which its technological requirements would not preclude the achievements of the fine configurations of the component design. Once a process is employed , irrespective of any efforts which can be devoted to select an optimum processing procedure , operations tooling ..etc. the overall cost of producing the part will have fallen into certain " Bracket " which is directly related to the process economics.

Unless at the design stage, serious considerations are given to the capability and requirements of the various manufacturing processes and their associated economics, it is likely that over specified design may preclude the employment or relativly economic and campatible process. The designer should even consider the possibility of breaking down a complex part into two parts, more economical to produce and assemble.

(3) THE INFLUENCE OF DESIGN PHYSICAL FEATURES ON PROCESSING COST (NO.OPERATIONS, TIME, TOOLING ;..ETC)

Even if the optimum economic process was selected and employed, the design of the component part can still influence the processing cost. These can be summerised as follows:-

- Intricate portions, will require extra operations.
- Certain features such as sharp corners , can create problems in tooling design & operations.
- Complicated designs can result in problems related to holding , setting up and handling the part(jigs & fixtures problems)

Saving can be achieved from designing part with minimum number of operations required to complete the part. Also design features of the part should be scrutinised carefully to ensure that tools can reach the desired points ,that tooling needed is the simplest possible an that special operations are not required.

Considerations must be given to the means by which each operation

is accomplished.

(4) THE IFLUENCE OF PROCESS DESIGN LIMITATIONS ON COST

The inherent design limitations of a process can present a far greater effect on cost than realised, if thorough analysis is not made. The case can arise in a situation where a part is designed for a relatively economic process which inherently does not meet the design requirements , thus resulting in a higher cost part in total . An example of this case would be designs which result in high rejections or high scrap ratios. The designer is therefore required to design for most economic production method or methods available and observe their inherent design limitations . This means that once a part is conceived the various methods by which each part can be manufactured should be considered seriuosly , weighing factors such as quantity to be produced , physical features, accuracy, production rate, scrap, as to their effect on final cost.

(5) THE INFLUENCE OF EXCESSIVE DESIGN TOLERANCES ON COST :-

The specificaion of close tolerances without serious consideraions of all the factors attendant to maintaining them in production invariably will result in needless excessive costs.This would be due to :-

Slowed output

Extra operations

High tool up-keep

High rejection or scrap losses

This comes from the fact that each production method has a well established level of precision which can be maintained in continuous mass production without exceeding the normal basic costs . No amount of inspection improves this level . The designer therefore should observe this level, for practical low cost production . A general idea of how machining tolerances compare as to relative or producing and holding them is given previously as shown in chapter (3).

Once the functional specifications for a particular part and the accompanying accuracy necessary to assure satisfactory performance have been determined, it is relatively easy to ascertain the

production method or methods that will be required to produce the part. Once the production quantity has been determined, the possibilites are usually narrowed to one or two alternative processes depending upon design flexibility . Each process must be analysed individually along with the particular part , to ensure that by designing particullary to suit a specific process, the desired degree of accuracy often may be obtained without undue cost penalty. If the process can not be rellied upon for the accuracy or surface finish required , the part must be designed for another more suitable methods,or where incresed costs can be absorbed.
The overall relationship between the component manufacturing cost and the component design is represented schematically as shown in fig.(8.1).

8.2.2 THE NEED FOR A MORE RATIONALISED DESIGN APPROACH TO COMPONENT DESIGN :

The designer, in his approach to component design, should consider all the various elements which contribute to the total cost of manufacturing the design.On this basis , he should influence within an overall component design concept , and for a given design requirements, the necessary configurations and features which would allow the employment of relatively economic material and manufacturing strategy (i.e. process or root).
Within an overall design concept, and for a given design requirements, an ideal design action would be firstly to consider for the manfacturing of the part the most economic combination of material and process that can meet the requirements of the particular design under consideration . Secondly to influence within the overall design concept the necessary features that can allow and facilitate the employment of this manufacturing strategy.

Because of the complexity of the design process and due to the fact that a "sound functional design " can only be a relative thing, it is impractical to impose on the designer , in any certain design exercise a particular solution in relation to materials or methds of manufacture which he should adopt. On the other hand because there is no absolute yard stick with which to measure whether a design is economic, the designer, for an established design requireents should achieve compromise between design requirements

and economy of manufacture.

He should develope different alternative economical designs, challenge every design against the component requirements , and settle for that alternative which can satisfy these reequirements and at the same time allow the most economical process to be employed. Having selected a process, the component configuration should be finalised to meet the process requirements.

In so doing the designer will be faced with two interlinked problems:-

1- Achieving a balance between meeting the design requirements and the economy of manufacture.

2- Communication of the information necessary to achieve that balance. Within the scope of thepresent work , the methods of communicating . The information which is necessary for the designer to achieve this balance is dealt within some detail . This is discussed in the following close , i.e. (8.2.2) . In this clause however, an attempt is made to first establish the type of informtion required to assist the designer finalysig his component design. For this purpose it has been assumed that the design of a component can take place at three distinctive stages; a preliminary stage, a main stage and a final stage. These can be designated stage 1,2and 3, respecively .

These stages can be clearly defined by considering them in reverse order. At the final stage of component design , i.e. stage 3, the desinger, having established from the previous stage the selected material and process to meet the design requirements , will have to finalse his component concept design to meet the requirements of the selected process. At the end of this stage the design can be released for production.

At an earlier stage of design , i.e. stage(2) , main stage of design for a given component concept design the designer would have to arive at an optimum combination of materials and manufacturing process which would meet the design requirements at an economical way.

At the preliminary stage of design i.e. stage (1) the designer is merely deciding upon his component concept design , i.e. rough shape and size of component, as well as establishing the design requirement for the given component.

Fg (8.2) shows a schematic representation of the three stages. Each of the above stages is individually considered further to discuss the relevant information required at each stage.

Preliminary stage of component design - stage(1)

This stage of component design almost overlape with the overall product concept design stage. Basically ,the designer establishes the overall shape and size of the component which fits into the particular subassembly design.No manufacturing or cost awarnes is required at this stage, the designer will rely on his enginuity, imagination and general back ground knowledge to outline the componen oncept design. In several cases , however , certain information related to customer preference in relation to shape or size may have to be passed to the designer to be considered at this stage. Similary any industrial or styling considerations which is related to the component under study should be brought to the designer's attention at this stage.

At the end of this stage, in addition to establishing the component main configurations the designer should also clearly define the specific technical requirements of the component. Fig.((8.3) outlines factors involved at the compoent preliminary design stage.

Main stage of component design stage (2)

This is a vital stage of component design at the end of which a large proportion of the component manufacturing cost will be committed.

Starting with a rough design of the component (size& shpate) the designer has to arrive at a combination of optimum material / processes which would allow the component configuration to be produced and the deisgn requirements to be satisfied.

Materials and processes must be considered together because of the obvious effect of each on the other. Dependening on the particular product requiremet and the characteristics of the industry under consideration the designer may fix one of these parameters and start with either the material or the process.

The overall component design will show the basic shape of , an the loads to be carried by ,each component and this by application of experience gives an indication of the methods which may be used to

produce this shape. The choice being influenced by the quantity and by the materials which can be used with each process. The choice of the material , which gives the required properties of strength and so on , will finally dictate the process to be used.
To highlight the type of information required by the designer at this stage the following two hypothetical steps are considered:-

(a) Technical assesment staqe(of man staqe of component design)

The designer should first establish all the potential possible combination of manufacturing processes and materials which can be used to produce the component under consideration and their influence on the component configuration . For this, the designer would need to know all possible materials, their types and forms , which exists to suit the particular component requirements. For each type of the material two types of information required ; properties of the materials in terms of its mechanical strength , resistance to corrosion ..etc. and its ability to be worked by the different methods of manufacture.
For each type of material the designer should be made aware of all applicable manufacturing processes which can be used with this materials to produce the given shape & size . Two types or process will be applicable; the primary process including heat treatment , and the finishing process. For each type of process the designer should be aware of the effect of employing each process on the overall design configurations. For this, complete knowledge of the process capabilities in terms of maximum size, possible shapes and resulted reliable tolerances should be made available.
These inforamtion should allow the designer to produce as maximum as possible number of combinations of material and processes. The designer should constantly review the component technical requiremets against the various possible combination to make sure that the component is not over specified.
When an alternative process fail to accommodate the component in question for the given consideration , the designer at this stage should consider influencing certain design changes to allow the employment of such a process. Also a consideraion should be given to break the component into smaller parts each of which can be made by different process,to be assembled or fastened using a third one.

(b) Economical assesment stage (of man stage of component design)

For each of above combination the designer should consider the effect of employment the material /process under consideration on cost ;both the direct and indirect costs. For this, complete knowledge of the cost of materials and processes should be known . For the material the most important thing would be the initial cost, in terms of £/lb or equal. As for the process, full knowledge of process economics and economical requirements is necessary . This will include minimum eonomic batch size, cost of tooling , material utilisation setting up time , processing time, labour rate and its associated overheads, and also the effect of change of design on the procesing costs.

fig.(8.4) shows schematic representation for the component main design stage.

Final stage of component design - stage(3) :

Having established an optimum combination of material / process(es) for given component design concept the designer final task would be to finalise the component design to suit the selected process, to ensure the producability of the design and the quality of the produced part. For this the designer would have to be aware of the process technological requirements , i.e. process limtations. Aso in certain cases it is useful for the designer to be aware of the capabilities of the existing mahcine tools and present shop loading . This will allow him utilising exisiting manufacturing, facilities to a maximum . Fig(8-5) reviews typical information required at this stage.

In considering the three stages of component design, as discussed above it is fare to say that there can be a considerable overlap between the three stages. Neverthless, adequate information regarding capability and cost would help a meaningfull decision to be made. Fig(8-6) shows the interaction of the three stages of component design.

8.2.3 THE EFFECT OF IMPROVING THE MANUFACTURING STRATEGICS ON COST AND THE NEED FOR A RETIONALISED MANUFACTURING ACTION

Despite of all efforts which can be made by the engineer designer to economise in product manufacture through an effective design, the resulted impact on cost still is limited and is directly related to the economics of the manufacturing process. The ability to manufacture products economically will eventually depend on the capability of the manufacturing process.

To discuss this issue further , two markets will be assumed as follows:

(a) A market associated with industries of relatively simple activity where product requirements remain static over a long life span of a product , such as domestic appliances market. In this type of market or similar markets there is always a growing pressure from the market to meet theproduct requirement at a more economical way.

(b) A market associted with industries of complex activiy where there are continuous development of the product functional requiremets ,such as the aerospace and aeroengine industries. Even with this type of market there are an icreasing pressure from the market to meet the growing product requiremet at an economical way.

In both above cases the ability to meet market requirements economically would depend on the capability and economics of the manufacturing process. The best example for this is learnt from the industrial survey . In the earoengine industry there is a growing pressure on Rolls Royce to increase engine output for same weight and cost so as to reduce the total £/lb thrust ratio. It was evident from the survey that , this was only achievable through increasing inlet air temperature to the turbine which inturn necessitates the use of higher temperature resistant material and better cooling methods for blades . The development of new forging and casting methods was invetible to achieve these requirements. The improvement of the manufacture strategies is therefore necessary in all cases to achieve economy of manufacture.

Fig(8-7) shows areas where improvement in manufacturing strategies can be achieved and their influence on cost. From the design point of view the most important areas is extending the capability of the

manufacturing process as this gives the designer flexibility to improve his overall concept design.

It is important to say that although improvement or developent in all areas of manufacture can be economically viable but the process of iplementing these improvements should be rationalised. Any improvement in relation to the manufacturing strategy should be directed to be made in areas of most interest to design . This will economically justify the expenditure of cost and also will influence the necessery design improvement to be made to allow maximum utilisation of the new improved manufacturing strategy.

8.2.4 THE NEED FOR A CONTINUOUS DESIGN MANUFACTURE INTERACTION :

Although some cost savings can be achieved by individual attempts from either of the design or the manufacture side, the interaction between the two function which is based in complete understanding of each other requiremets, is enevitabe, if maximum economy is to be achieved. In considering design and product requirements the manufacturing function should influece the necessary improvement or development of the manufacturing process in the areas of most interest to design in order to meet these requiremets at an economical way. From the design point of view, considering the capabilities and economics of the improved process should develope the component design to meet the requirements of manuacture to minimise costs Fig(8.8).

8.2.5 THE NEED FOR AN IMPROVED MANUFACTURE DESIGN INTERFACE

It is concluded that the key to achieve maximum economy in product manufacturing is to effect the an interaction between the design function and the manufacture funciton in certain manner. It is now proposed that the answer to the growing need of minimising manufacturing costs, is to rationalise this interaction activity to ensure that it is taking place at the most efficient manner. This inturn will require a specialised function to link together, and indeed rationalise the design and manufacture activities.

Analysis of the required arrangements

In order that the design manufacture interaction takes place in a rational manner, certain organisational and technical arrangements

will be required.

From the organisational point of veiw , there is a need for integrating the design and manufacturing functions. This integration is to allow each function to be aware of the other function requirements and views . from the designer point of view the integration should allow the designer to take advantage of all new materials and methods which would help him developing a sound functional concept design and economic component design . From the manfacturing point of view a closer link with design would allow future design requirements, both functional and economical , to be fully interpreted which would help directing the efforts in relation to developing the manufacturing process.

from the technical point of view improvement should be achieved in three different areas as follows.

- Developing the right costing system for design purposes
- Developing the proper information system for both design and manufacture purposes
- Establishing a basis for decision making in design , and manufacture.

In developing the right costing system for design purposes it would be necessary to highlight those elements of costs which is directly influenced by the design. Any overhead values or indirect costs which only useful for accounting or budjetery purposes and not significant from the design point of view should be shown as a separate items, and not be included in a total lumpsum value of component costs.

In developing the right information system for the designer all relevant ifnormtion related to materials, process capabilities and economics as discussed before should be included. More important the information should be presented to the designer in the way which should enable him to make the right decision related to materials, processes an design. The same type of information can still be used by the manufacturing functions.

In order to support the costing and the information systems the designer should be given some rules for decision making . This is to help in making decisions related to both design or manufacture issues, i.e. materials selection , process selecion , make or buy , purchasing new machine ..etc.

The need for a new specialised function

It can be argued that every engineering organisation is envolved in activities related to econimising in product manufacture as every day practice. However , except for indsturies of relatively simple design activities, it is now beyond the capabilities in time and energy of any one person to know all that goes in design and manufacture. Designers therefore must rely more and more upon specialist advise. In most industries the need for specialist knowledge inside te design aeas has been recognised . It is therefore recommended that to improve the desin manufacture interface a specialised function should be established inside the engineering organisaion .This specialised function should be an itegrated part of either the design or the manufacture function , or both depending on the characteristics of the industry under consideration and the particular product requirements.

This specialised function will take an active part in the design process and also in making decisions related to product manufacture.

In aiding the design process this specialised function should fully support the design function in all aspect. Is most important role would be to secure from all other areas of production and purchasing , all the relevant informtion related to component manufacture.

In working closely with the accounting and costing function this specialised function can interprate the accounting cost figures into meaningful data and relate these proper cost data to the already obtained manufacturing information.The complete results should then be passed to the designer to help him make his own decision regarding material / process design combination . At the same time this specialised function should also use all the iformation which become avaiable to compile and update a data bank . This data bank should be kept in the design area for use mainly by the designers but equally production engineers should have an access to it either for retreiving or updating purposes.

Fig(8-9) schematically represent the role of this specialised function at the component design stage. It can be seen that the specialised function is refered to in the figure as D.E.M. function

, which is an abreviation for " design for economic manufacture " function. It can also be seen that in its defined role the D.E.M. function in this instance is made part of the design function.In a similar manner inorder to complete the interaction process, this D.E.M.function can be made part of the production function to help directing their activities into developing the manufacturing process in the best way to meet the design requirements. This is shown schematically in Fig(8.10) The figure shows that the D.E.M. function will have link with outside technology through purchasing and procurement .

Figures(8-9)(8-10) show that in both cases the D.E.M. function despite of the fact that it can be either part of design or manufacture is reporting to a product management who in turn reporting to a policy management.

8.3 THE SIGNIFICANCE OF EMPLOYING A RATIONAL PROCEDURE FOR PRODUCT COST CONTROL AS A MEANS TO IMPROVE COMPANY PROFITABILITY :-

It has already been established already that the product manufacturing cost can be influenced by decisions taken by the engineer designer in developing his component design and by the production engineer, in developing the manufacturing process. The interaction between the two functions was found necessary to achieve maximum product economy.

The initial industrial survey, however, has shown that the resulted product manufacturing costs can be influenced by decisions which are not related to either materials or processes and which can dramatically influence the commercial success of the product. The survey showed that during the product definition, development , design and production stages unnecessary excessive costs can be continuously introduced and accumalated which may result in the total product costs exceeding the limits which can be acceptable by the market.

It is therefore proposed that in addition to any arrangement that are made to improve the design manufacture interface, a means of product cost control must be introdced to ensure the eventual commercial success of the product. In this section , a general proposals for a rational proposals for a rational procedure for engineering products , is reviewed.

8.3.1 IDENTIFICATION OF STAGES OF PRODUCT COST CONTROL :

In analysing the reasons for introducing the unnecessary costs and the stages at which these costs are introduced it can be found that it differs from one product to another -(from the industrial survey). In general, costs can be committed to the product during any stage of product development or production fig(8.11) shows possible reasons for introducing unnecessary costs and the stages at which these costs can be introduced.

The figure shows that there are three major stages at which , considerable costs can unnecessarilly be committed to the product . Te first being the product definition stage, at which misinterpretation of customer requirements can lead to a wrong statement of product specifications which may inturn result in developing an overspecified uneconomic design and consequently

costly product. The second stage being the product design stage, at which may the development of unsound functional concept design or bad detial design considerably influence the resulted production costs . The third stage, being the product manufacturing stage, at which , the employment of uncompatible methods can result in excessive costs-case study one, chapter 6,has demonstrated a typical example of costs being committed at the production stage,due to same reason.

Product cost control therefore should take place at three stages as follows:

1- Product approval and definition of specification stage.

2- Product design stage.

3- Product manufacturing stage.

In this chapter, proposals for the procedures to be followed and arrangements to be made at the first and second stages of product cost control are discussed in some details.

8.3.2 PRODUCT COST CONTROL AT THE PRODUCT DEFINITION -APPROVAL STAGE:

This is the stage at which the organisation management aproves future company products on the basis of potential market needs and available resources of the company.

Before any major committments of the company's own manufacturing resources takes place, the organisation management have to decide whether future market needs can be met reliably and profitably with the expertise and resources available or obtainable in the business. In order to enable the organisation management , before the management arriving at the right decision, certain information will have to be presented, which can relate potential manufacturing costs consistent with meeting the market needs and the anticipated return on-investment as a result of the product being sold at market selling price.

The following are the main actions to be taken at this stage in order to ensure that a meaningfull decision can be made:-

(a) The identification and quantification of potential market requirements

(b) The establishment of preliminary design concept , manufacturing methods and cost appraisals.

(c) The decision of the management whether or not to proceed with the project on the basis & presented information .

(d) The establishment of target manufacture cost for the complete product.

The above are further discussed as proceeding.

(a) THE IDENTIFICATION AND QUANTIFICATION OF POTENTIAL MARKET REQUIREMENT

The accurate identification and quantification of future market requirements is the most vital information for all aspects of forward planning and product costs control . It is the task of the marketing and design engineering functions together to establish these requiremets.

Idealy a communication loop should exist which links customers, and potential customers, with the engineering function through the marketing function. There should be two inputs to this loop:

(I) Customer requirements for the long term future, 5-10years.

(II) Information on technical inovation that are likely to emerge within the same period.

The above inforamtion should be used to feed the R&D programmes of the business which should be fully aligned with the established future requirements. The envolvement of the design engineering function at this stage would help in enterpreting customer requirements into an outlined product specification which is essential in developing and producing an economic product.

The market function , through its marketing research , should provide certain information related to the market desired selling price, quantities and time scale . It is important that these information are supplied with some degree of accuracy ,and being updated and corrected as time progresses.

(b) <u>THE ESTABLISHMENT OF DESIGN CONCEPTS, MANUFACTURING METHODS AN COST APPRAISALS</u>

On the basis of estbalished customer requirements and outlined specifications , the design engineering function should be able to produce preliminary design concepts which shows how the required functions would be satisfied . These designs should be assesed to establish possible methods of manufacture. The latter inturn would be based on possible quantities, production rate, time to start the production and the resources already available i.e. labour , plant, skill ..etc.

Appraisals of product cost should be made for each of the potential manufacturing methods . These costs, which may not be accurate should be stated with tolerances which should indicate level of confidence. At this stage full knowledge on uptodate materials and methods as well as potential future development in relation to product manufacture would be essential.

(c) <u>THE DECISION OF THE MANAGEMENT WHETHER OR NOT TO PROCEED WITH THE PRODUCT</u>

It is the general management responsibility to decide , on the basis of information presented, whether or not the market requirements can be met profitably with the available resources. First , based on the minimum forecast selling price which is supplied by the Marketing function, the finance function should

calculate and establish a maximum permissble works cost figure. This figure will be based on company overhead and minimum acceptable profit level.

Only by comparing the maximum permissible works costs provided by the finance function , against the appraisal of works cost built up in the normal way from the design concept and manufacturing methods envisaged , that the management can make a decision regarding the future of the project /product, under cosideration .

(D) ESTABLISHMENT OF A TARGET MANUFACTURING COST FOR THE COMPLETE PRODUCT

If the management decided to go ahead with the product then, before the commencement of any engineering work , it will have to allocate an overall target cost for the product and to gain acceptance and commitment of personnell concerned from the engineering function to meeting this target.

There is no particular formula which can be used to establish an overall product target cost. This is usually a management policy decision which can be based on other considerations.

The following points are proposed as a guide.

- The works cost figure derived from the forecast selling price must be considered as the absolute maximum permissible works cost , i.e. target cost,consistent with meeting the financial objectives of the business.
- If , however , the initial appraisal of works costs, based on estimates of design concepts, is apreciably less than the maximum permissible cost, the appraisal figure may be used as the target.
- If , on the other hand, the initial appraisal of works cost is some how equal to the maximum permissible cost, then the target should be set at a figure 10-20% less than the maximum permissible.

It is vitally important that, whatever criteria used to set a target cost, it should be set at a realisitic level which can be met. The target cost should be established and set against a definite product specificaion and determined along side other criteria such as product operating cost, life, performance..etc.

Fig. (8.12) shows proposed procedure for product approval and allocation of overall product target cost.

Fig(8.13) shows proposals for arrangements of organisation functions interface which allows the procedure actions to take place and the right decision to be made at this stage . The figure shows that the D.E.M. function has a vital role in relation to preparing recommendation to the general management. The main task of the D.E.M. function at this stage is to establish , on the basis of proposed design concepts , options of proposed methods of manufacture and appraisal of works cost for each option. The function , in conducting this role,should be helped by information on costs from , again , a centralised data bank.This particular task is in line with other proposed tasks of the D.E.M. function as has been discussed previously.

8.3.3 PRODUCT COST COTNROL AT DESIGN STAGE -DESIGN COST CONTROL:

This is a stage where the engineering function of the organisation takes the responsibility of developing a product design which should reliably satisfy pre-established market and customer requirement at the minimum possible cost with the alocated target cost.

The overall product concept design would have been established and agreed upon from the previous stage, i.e. product definition stage, together with an outlined defined product specification. The main objective of this stage would be to develop design details , for production, which would allow the total overall target cost to be met. To enable this objective to be achieved the following procedure actions are assumed:-

(A) The allocation of module target costs to individual subassemblies & component , and obtaining the acceptance of design engineers of personal responsiblities for meeting the agreed targets.

(B) The establishment of systems that monitor potential product costs and changes in market requirements as the design and development proceeds.

(C) The establishment of management review program to monitor and determine the status of the design programme and innitiate corrective action as necessary .

(A) THE ALLOCATION OF MODULE TARGET COSTS TO INDIVIDUAL SUBASSEMBLIES AND COMPONENTS .

To enable the overall target cost to be met , every individual who are involved in the design process, and can influence the cost directly or in directly , should be made responsible for meeting this target cost.

This should be done by dividing total design concept into module areas , and allocate fraction of the total cost to each of the design module ,and making individual designers/engineers responsible for meeting these module targets.

Individual module target costs, should be allocated and presented together with a predefined specifications for the part under considerations. To obtain an individual's acceptance of this module target cost it is essential that he understands the basis of allocating that fraction of the total cost target to his design part. Having accepted his module target cost each designer should take responsibility for involving the appropriate organisation function in meeting this target.

(B) THE ESTABLISHMENT OF MONITORING SYSTEM TO REPORT PRODUCT COSTS AND CHANGE IN MARKET REQUIREMENTS

On the basis of produced detail designs, estimates of manufacturing costs should be produced at regular intervals for individual module design areas. This should highlight variances from targets and thus individuals responsible for the targets are made aware of the cost implications of their design efforts for them to take corrective action where necessary.

On the other hand, all changes or potential changes of market requirements, which may take place during early stage of product design, should be higlighted and reported by the marketing function , and their effect on cost drawn to the attention of the customer. As a result of changing of customer requirement, selling price may have to be revised in the light of competition activity.

(C) MANAGEMENT REVIEW PROGRAM FOR CORRECTIVE ACTIONS :

If the monitoring system , as discussed in (B) above, works properly, individual design engineers would know in time when the projected manufacturing cost for their design exceeds the target set and corrective action should be automatic. This activity should

The review by the management on the other hand should be priodic and concerned with cost variances against target on the project as a whole as well as chages in market requirements, if any.
The action programms for correcting design status, resulting from these reviews may contain one or more of the following actions.
(I) Changing design details and manufacturing methods
(II)Changing specifications
(III) Changing target

(I) CHANGING DESIGN DETAILS AND MANUFACTURING METHODS :-
This is generally the area in which the majority of the action is required. It is in this area that value engineering techniques such as functional analysis, function cost analysis , evaluation by comparison ..etc. can be used with maximum effect, specifically at subassembly level.
The value engineering approach at this stage will form a basis for reappraising customer requirements on a strictly functional basis rather than a hardware basis and thus widen the opportunity for introducing different design cocepts , materials, methods..etc.

(II) CHANGING SPECIFICATIONS
In certain cases, where relaionship with the customer allows it, " trade-offs" of specification against selling price should be sought. This represents an important aspect of product cost control and cost benefit can be large.

(III) CHANGING TARGETS
The marketing information related to competition activity may indicate that the total target cost should be changed, i.e. to be reduced to meet competition. This should involve changing of individual targets but not necessarily in direct proportion to the changes in the total target.
Fig.(8.14) shows logical procedure for design cost contro;
Fig. (8-15) shows schematic representation for organisation function interface for design cost control activity. The figure shows that the D.E.M. function is used basically as a monitoring system to report cost variances, support designer in meeting this target cost and report to management potential alternative solution for corrective actions.

8.4 A TOTAL APPROACH TO DESIGN FOR ECONOMIC MANUFACTURE

The role of the proposed D.E.M. function , as part of the engineering organisation in relation to each stage of product manufacture and design, as shown in figs(8.9),(8.10) ,(8.13),(8.15) individually represent an aspect of the overall proposed design for economic manufacture activiy.

Taking into consideration that the ability to produce products economically to meet growing market requirement would depend on the capability and economics of the manufacturing process, the prime objective of the D.E.M. function should be developing the manufacturing process,fig(8.10) . In this role, as part of the production function, the "D.E.M."function should be in a position to cleary identify future product requirement and consequently influence the necessary manufacturing improvemet to be effected in areas of best interest to design.

Having developed the manufacturing process, the D.E.M. function should cleary define the capability of this process an presented to the designer together with costs in the best possible form which would enable him to take full advantage of this manufacturing development in designing his product . This can be best achieved if the D.E.M.function was made part of the engineerig design function.

In its role as a supportive function to engineering design, part of the task of the D.E.M. function would be to compile and update a centralised data bank. This data bank should include information which relates costs to design and to fuction as well as information related to the technological requirement of the process .(Fig.8.9)

In planning for new products the D.E.M. function will have a role to play. Having establishing future market needs and possible design concepts by the marketing and engineering design function respectively , the task of D.E.M. function, in their capability as manufacturing specialists, would be to establish options of proposed mehods of manfacture, resources and capital required for investment and appraisals of works costs for each option thissh ould help the organisation general management to decide on the viability of the product as a whole, as well as establish a manufacturing target costs for the complete product. (Fig 8.13)

As the product enter the design stage, the D.E.M. function acts as a means to design cost control. Its main task is to set module targets costs for individual subassemblies and parts and monitor variances from targets as the design moves from one stage to another (fig.8-15).

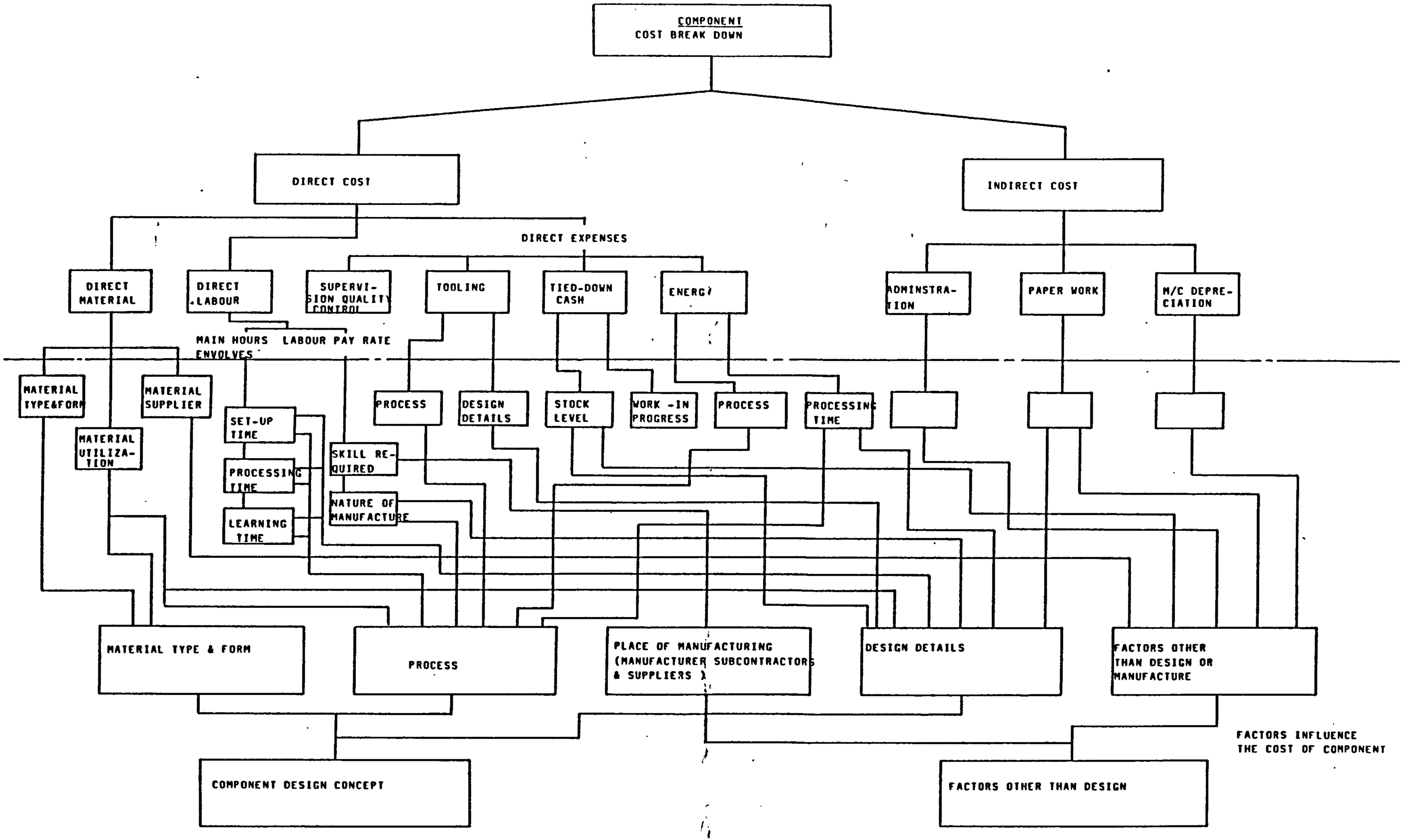

FIG.(8.1) INFLUENCE OF COMPONENT DESIGN ON PRODUCT MANUFACTURING COST

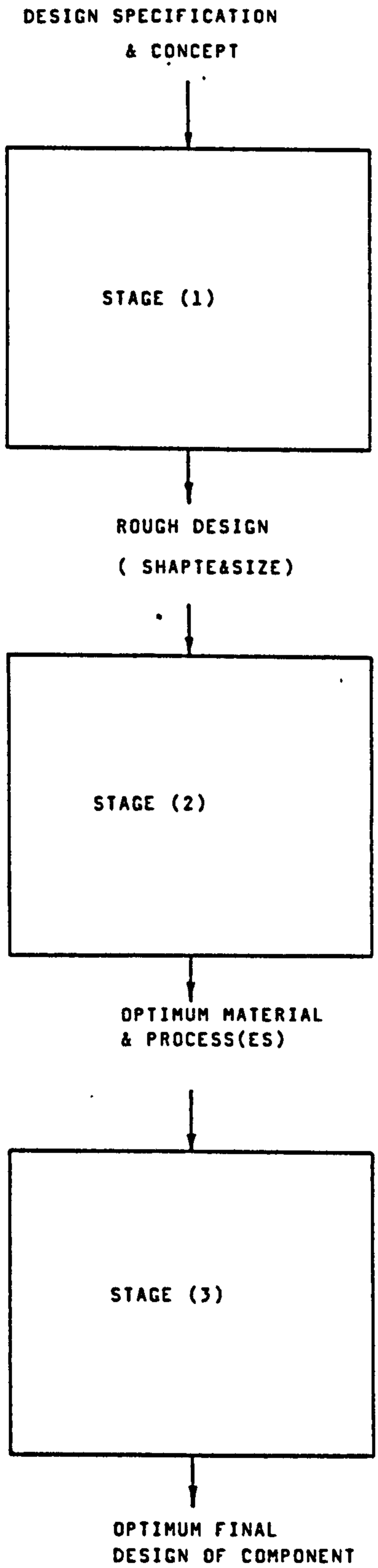

FIG.(8.2) STAGES OF COMPONENT DESIGN

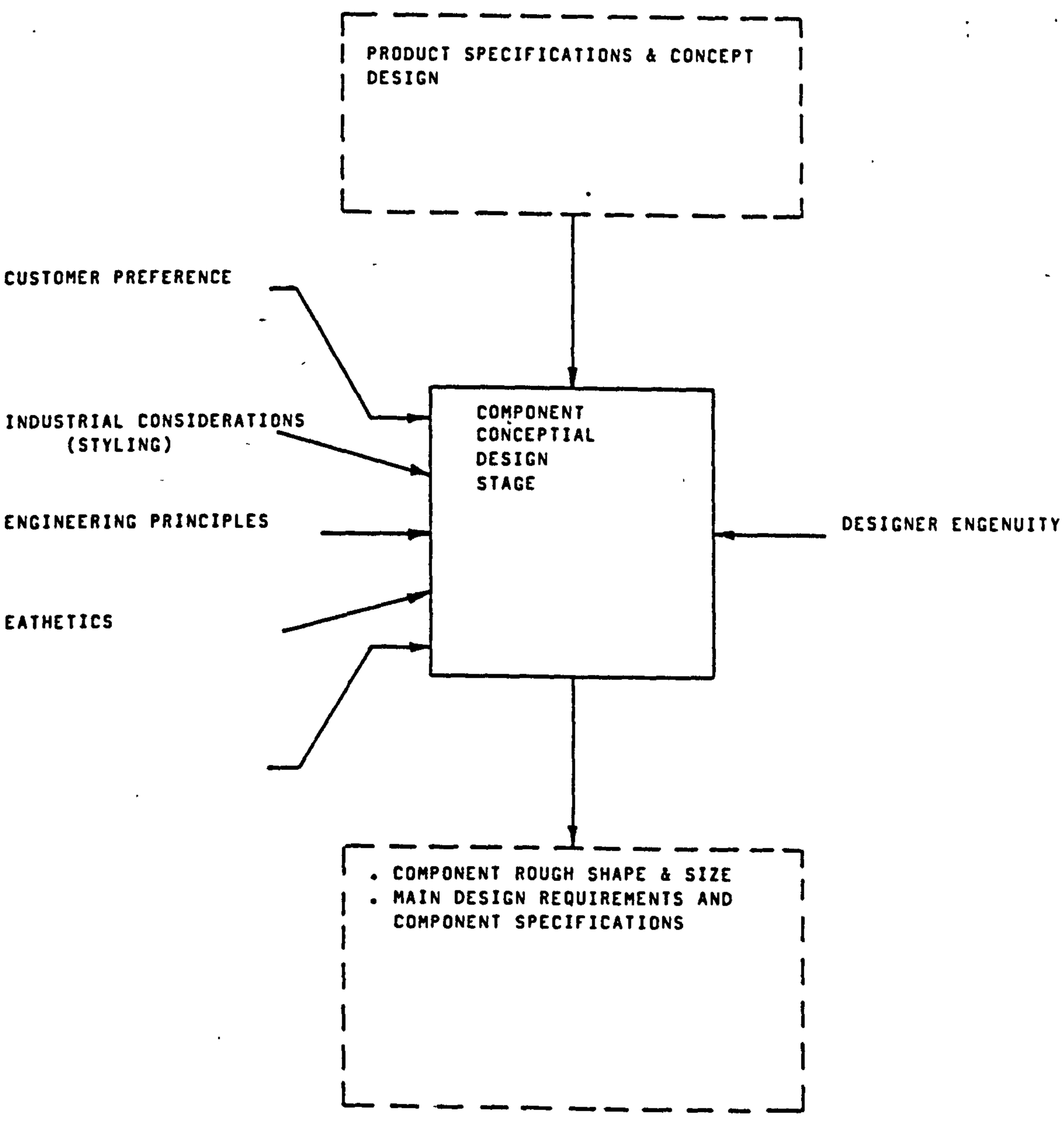

FIG(8.3) FACTORS INVOLVED AT COMPONENT PRELIMINARY DESIGN STAGE- STAGE (1)

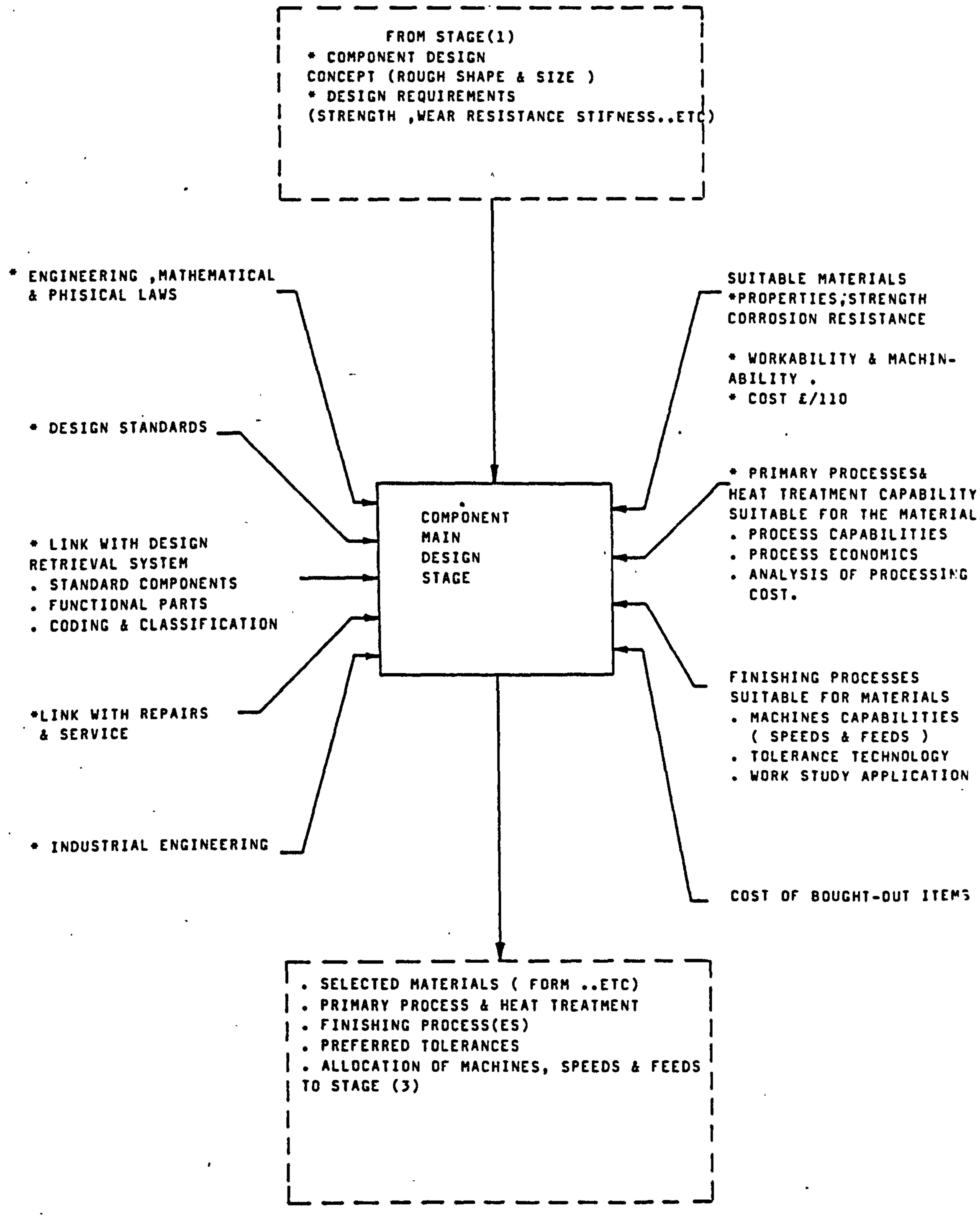

FIG.(8.4) TYPICAL INFORMATION REQUIRED AT THE COMPONENT MAIN DESIGN STAGE (STAGE 2)

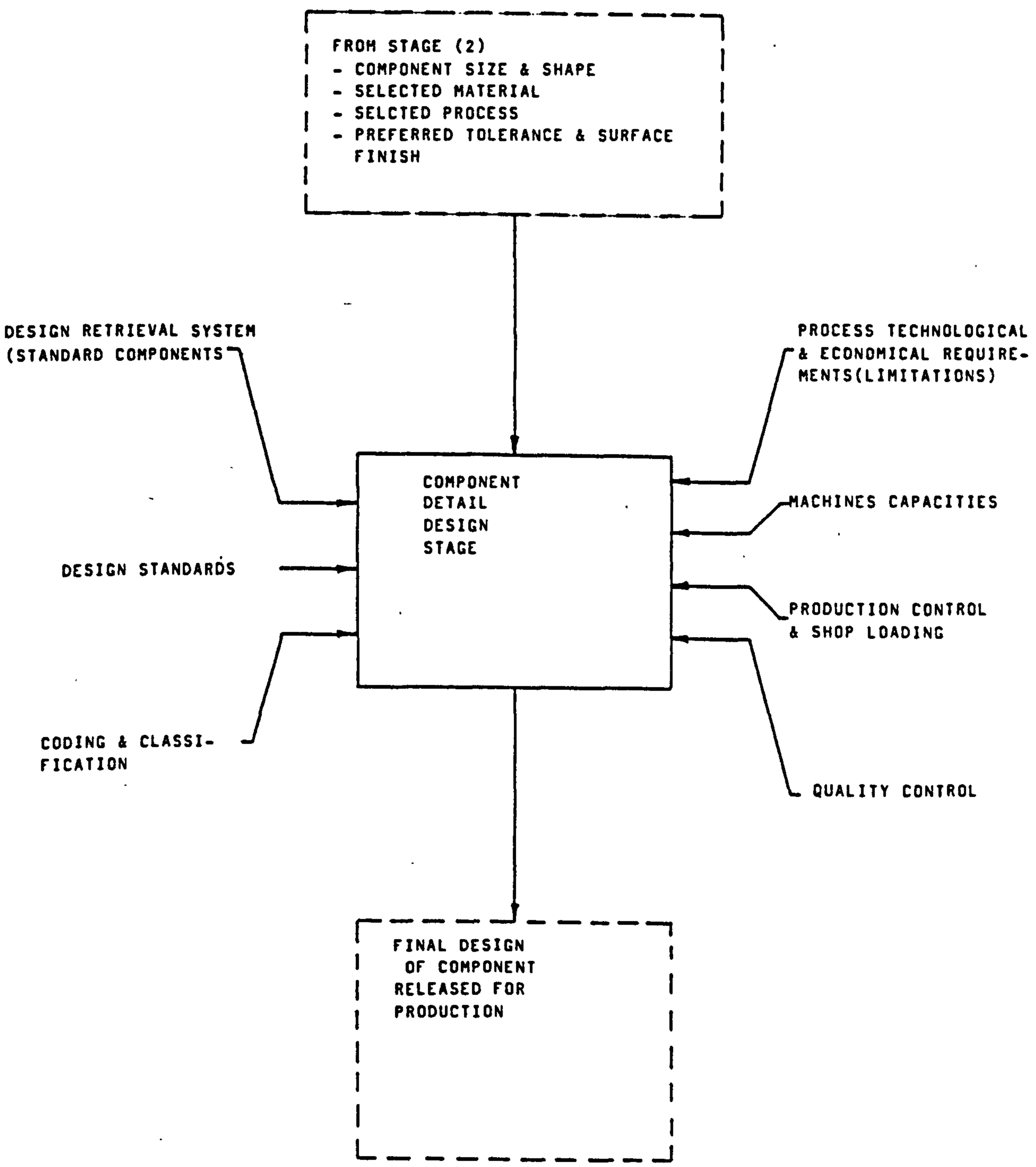

FIG.(8.5) TYPICAL INFORMATION REQUIRED AT FINAL STAGE OF COMPONENT DESIGN (STAGE3)

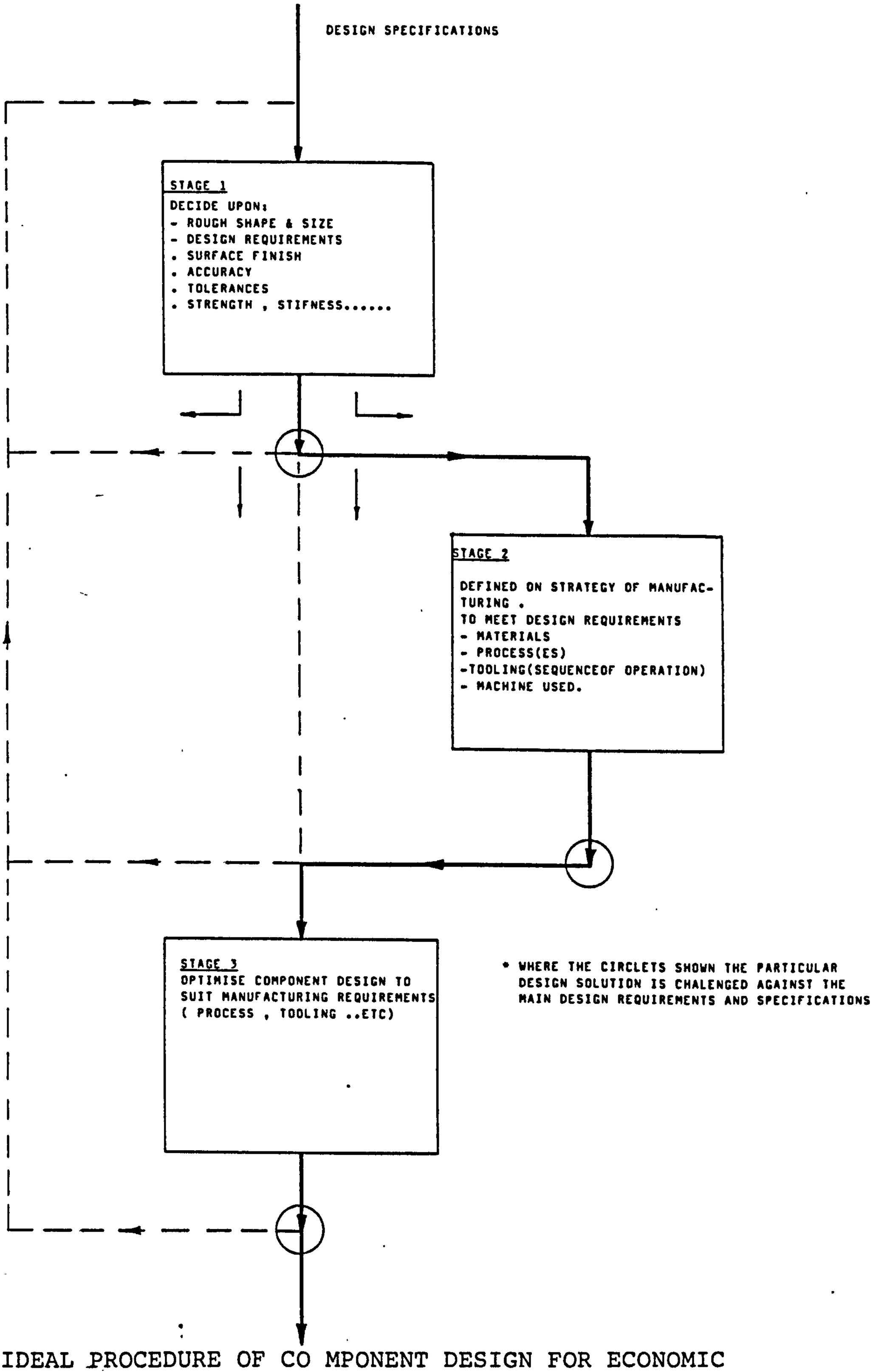

FIG(8.6) IDEAL PROCEDURE OF CO MPONENT DESIGN FOR ECONOMIC MANUFACTURE

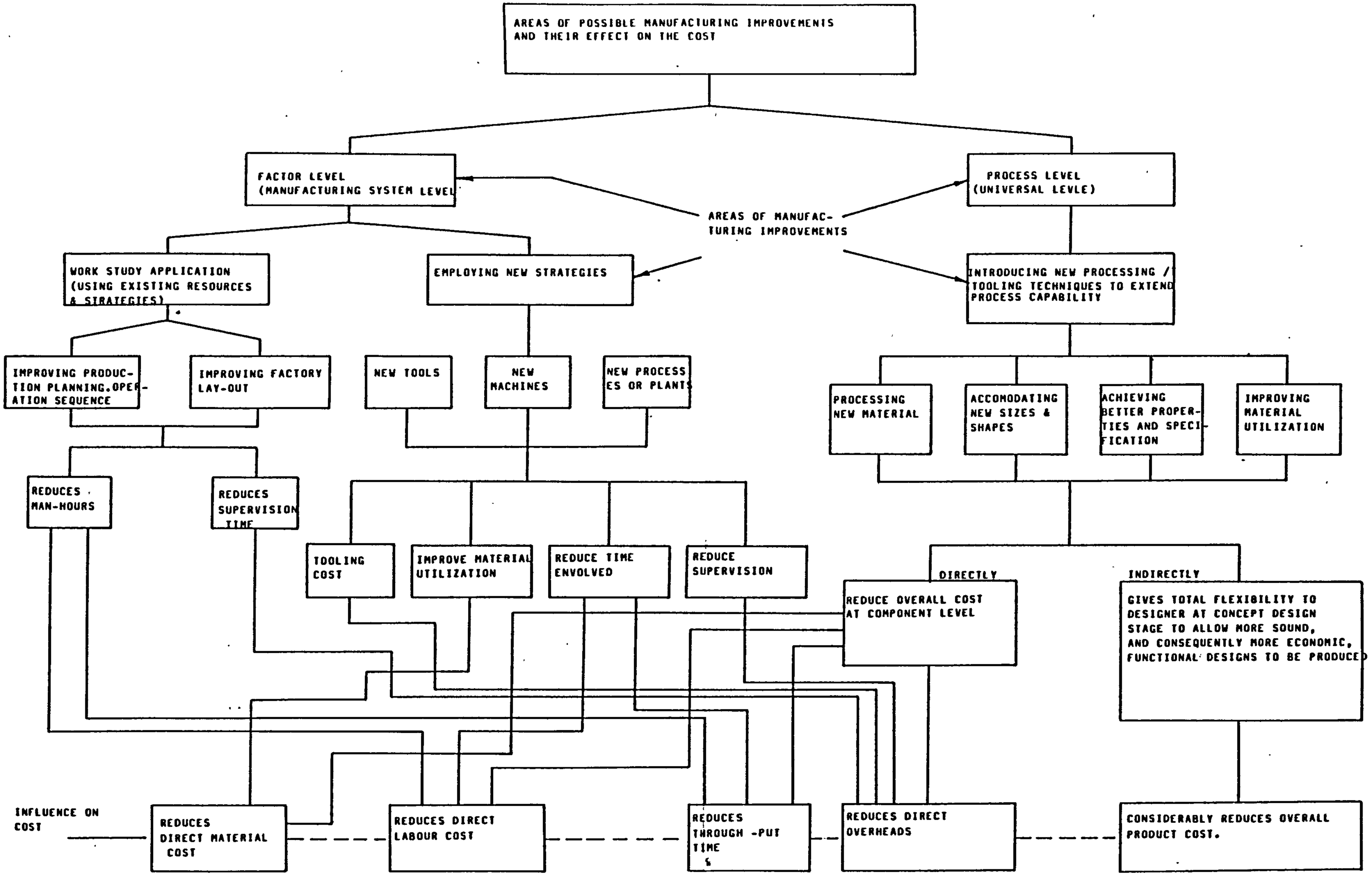

FIG(8.7) THE EFFECT OF IMPROVING THE MANUFACTURING STRATEGIES ON THE PRODUCT MANUFACTURING COSTS.

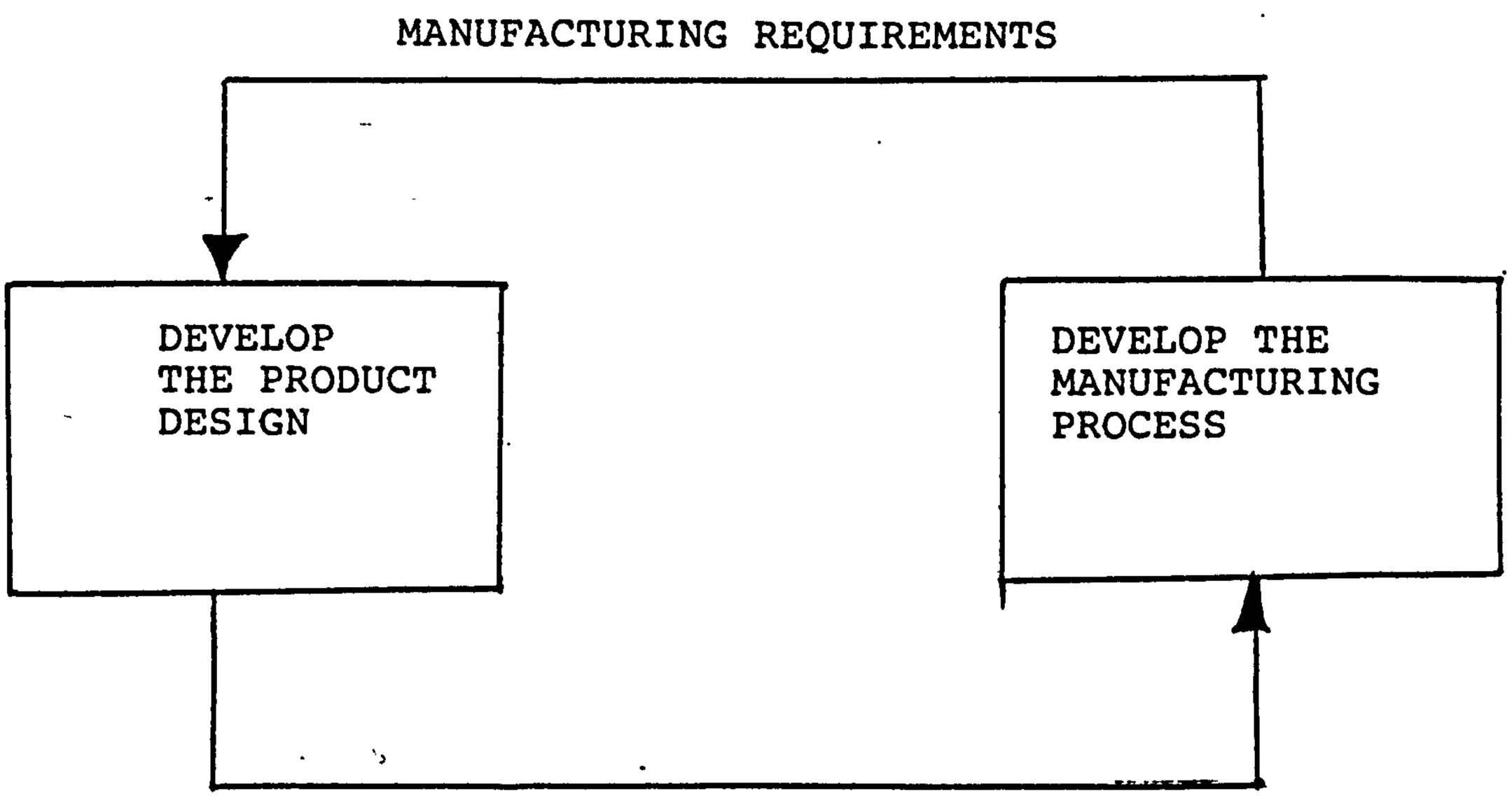

FIG 8.8 THE IDEAL DESIGN MANUFACTURE INTERACTION

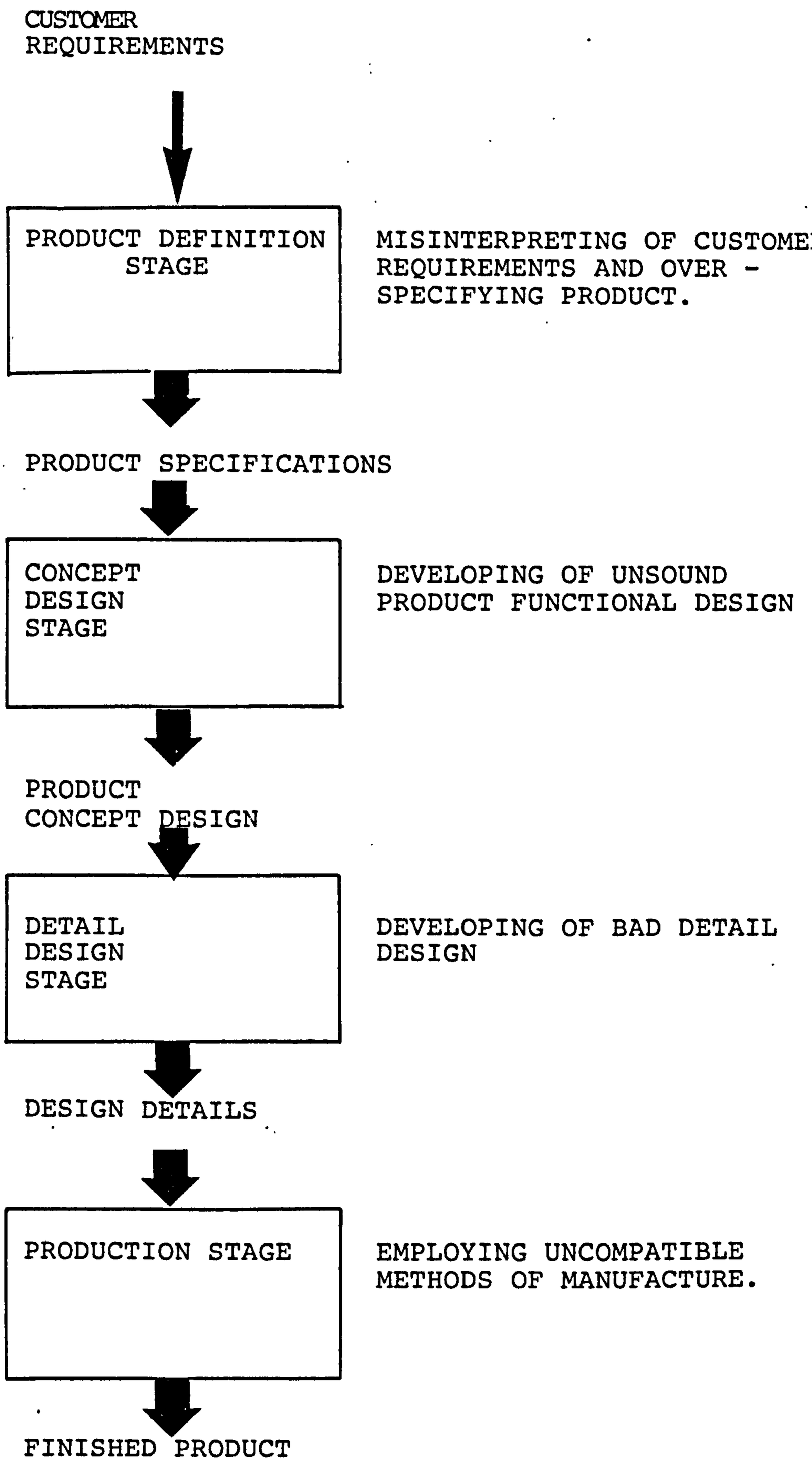

FIG.(8.9) REASONS FOR INTRODUCING UNNECESSARY COSTS DURING PRODUCT DESIGN AND PRODUCTION STAGES.

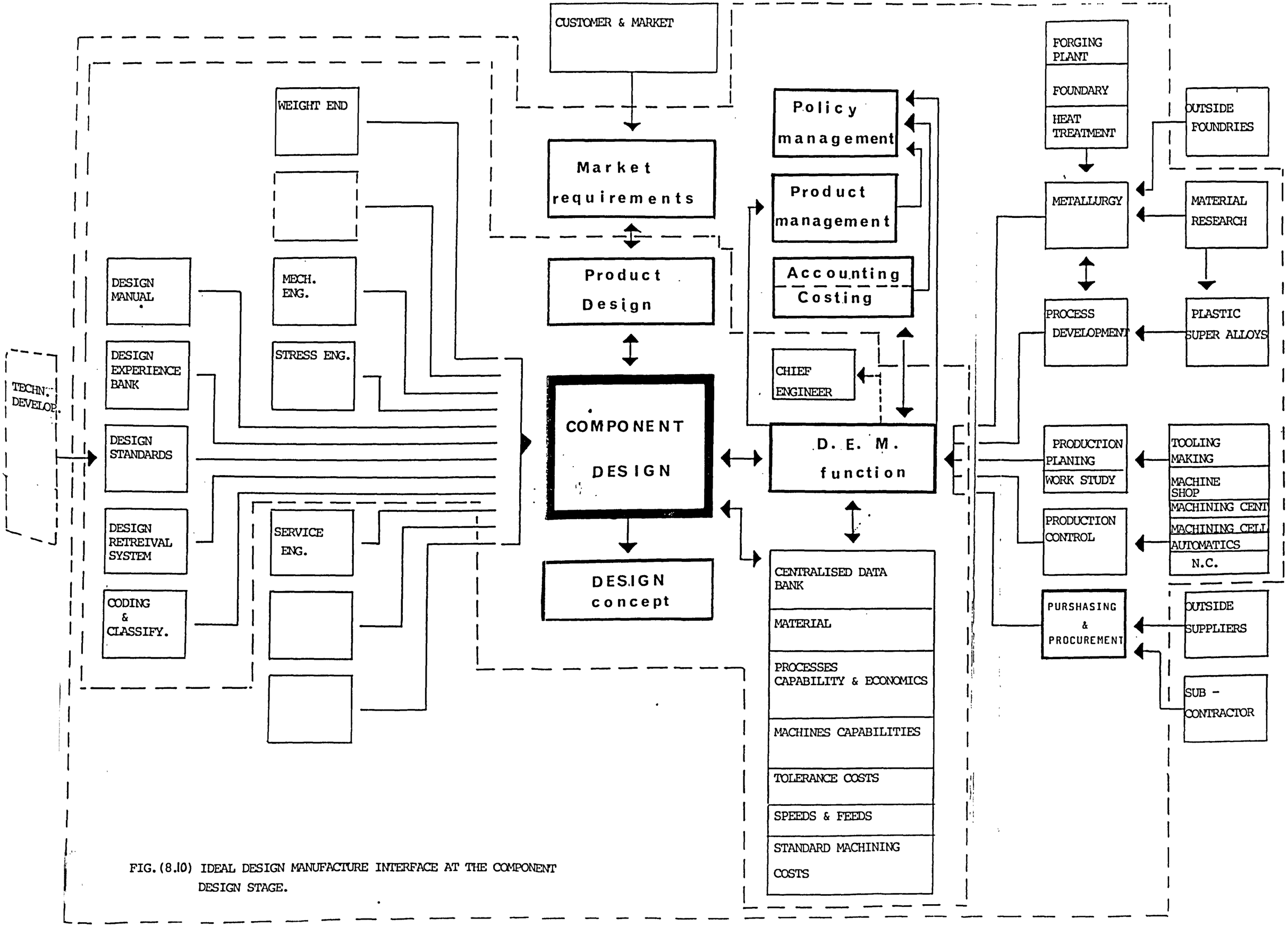

FIG. (8.10) IDEAL DESIGN MANUFACTURE INTERFACE AT THE COMPONENT DESIGN STAGE.

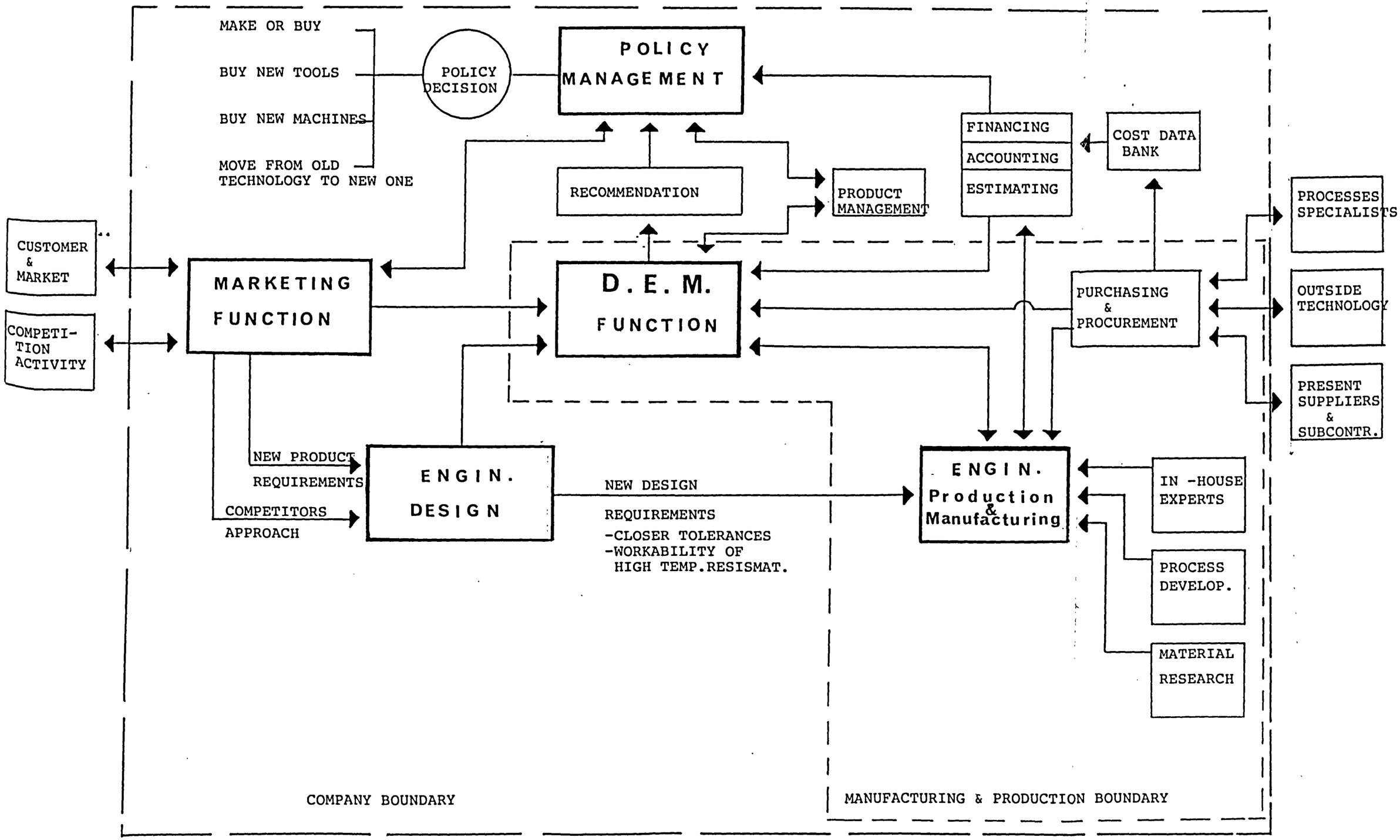

FIG.(8-11) DESIGN/MANUFACTURE INTERFACE-MEETING PRODUCT REQUIREMENTS

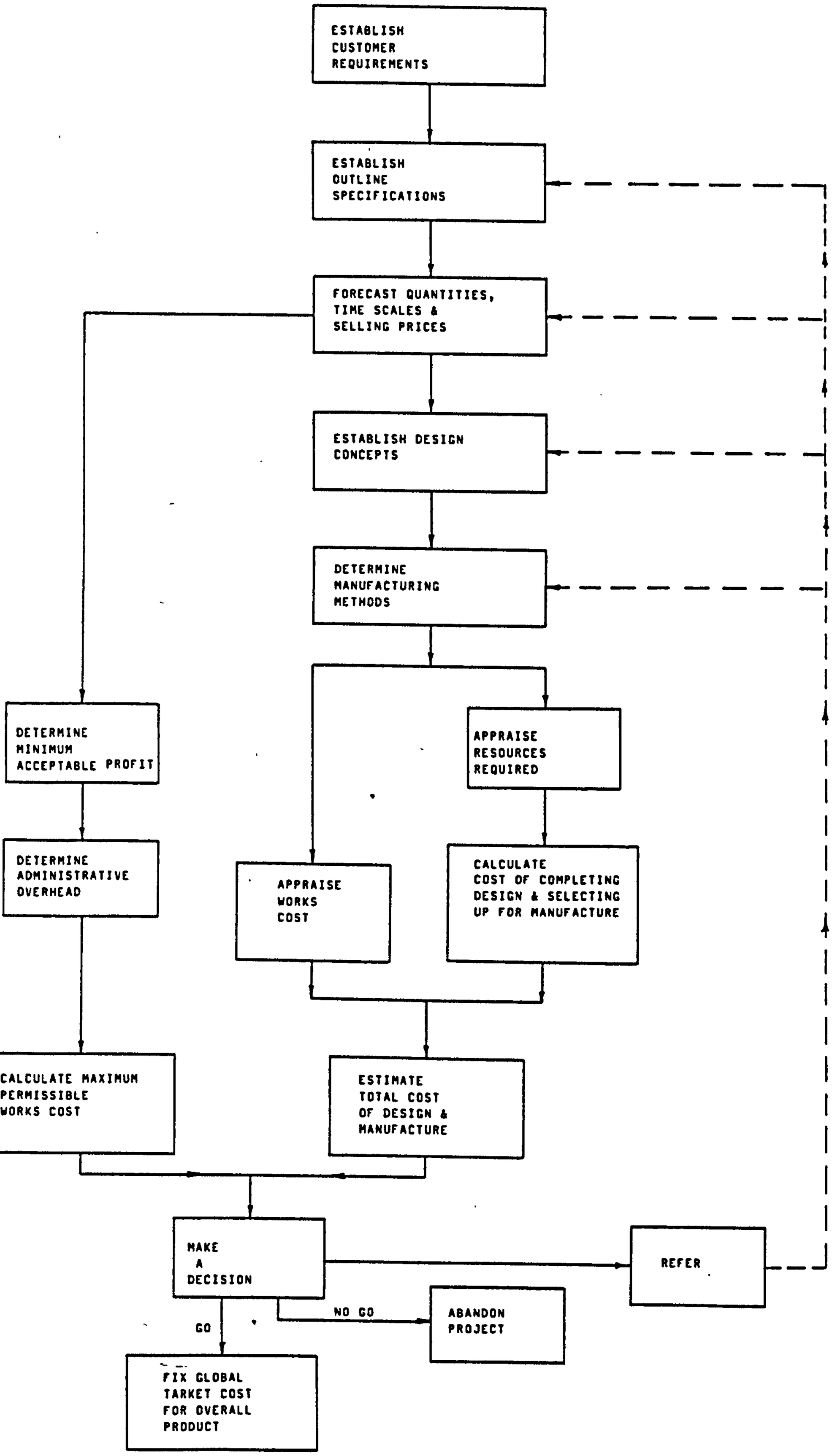

FIG(8.12) PRODUCT COST CONTROL PRODUCT APPROVAL/ALLOCATING OF GLOBAL TARGET COST PROCEDURE

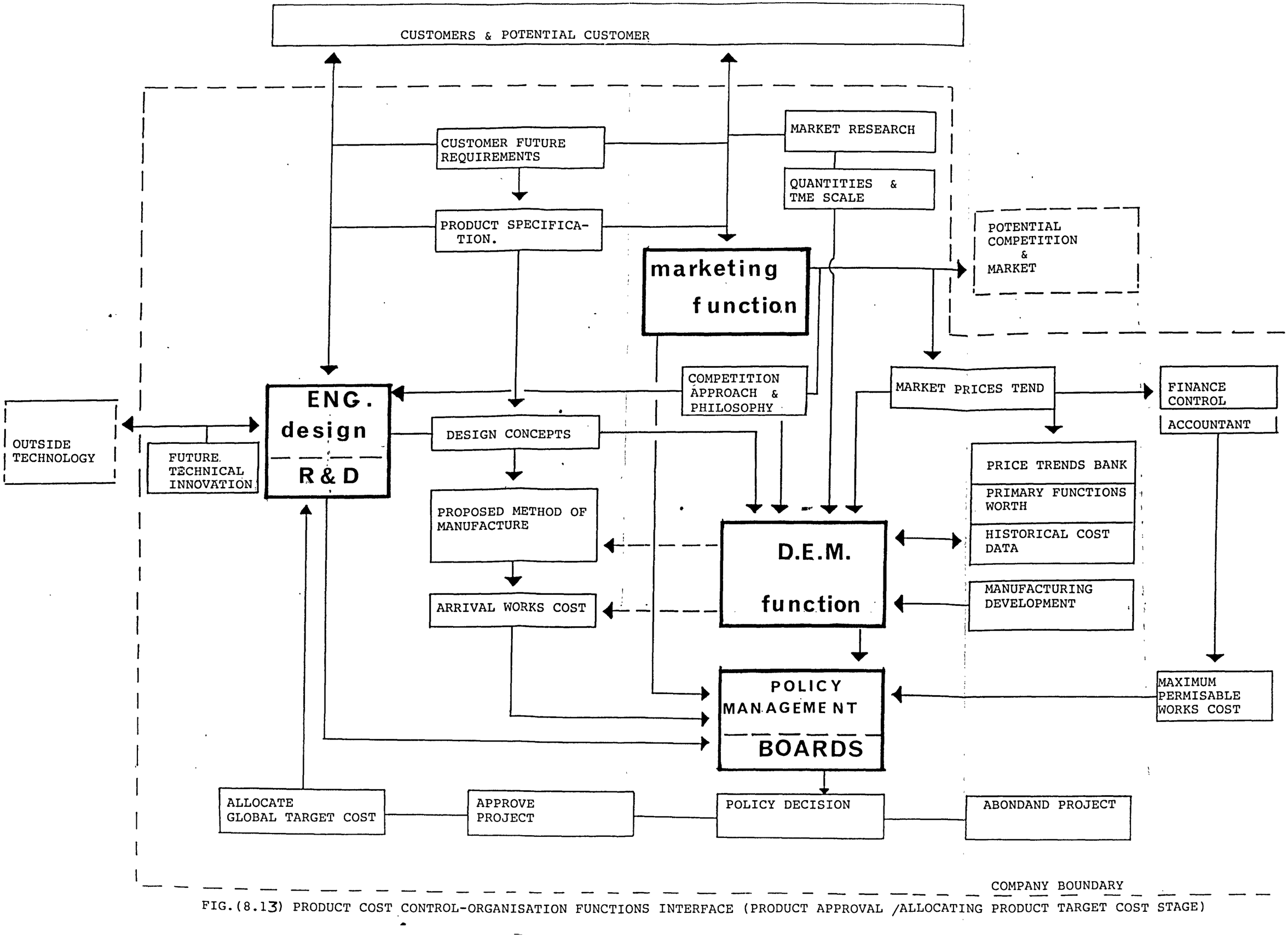

FIG.(8.13) PRODUCT COST CONTROL-ORGANISATION FUNCTIONS INTERFACE (PRODUCT APPROVAL /ALLOCATING PRODUCT TARGET COST STAGE)

FIG.(8.14)PRODUCT COST CONTROL PROCEDURE FOR DESIGN COST CONTROL

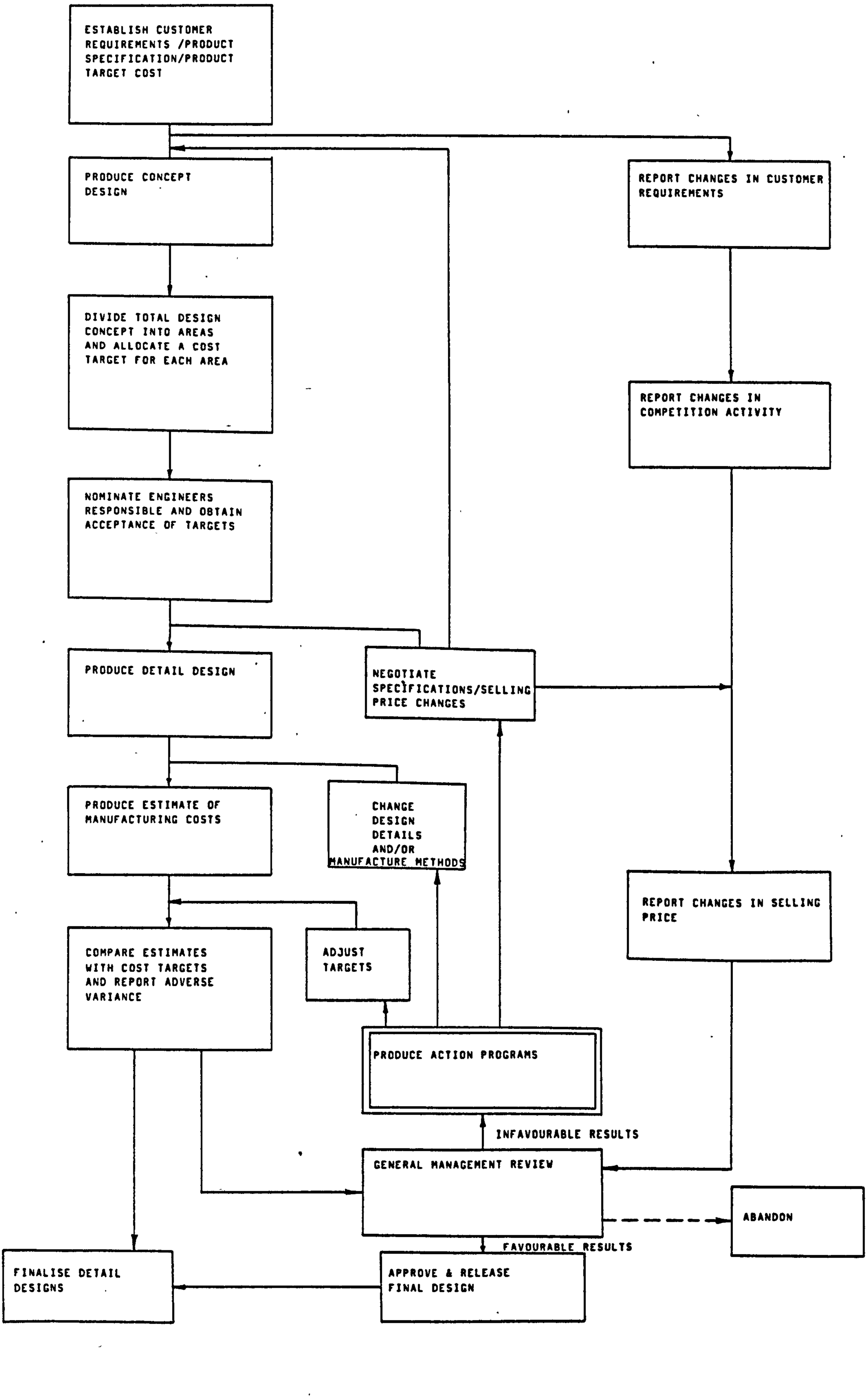

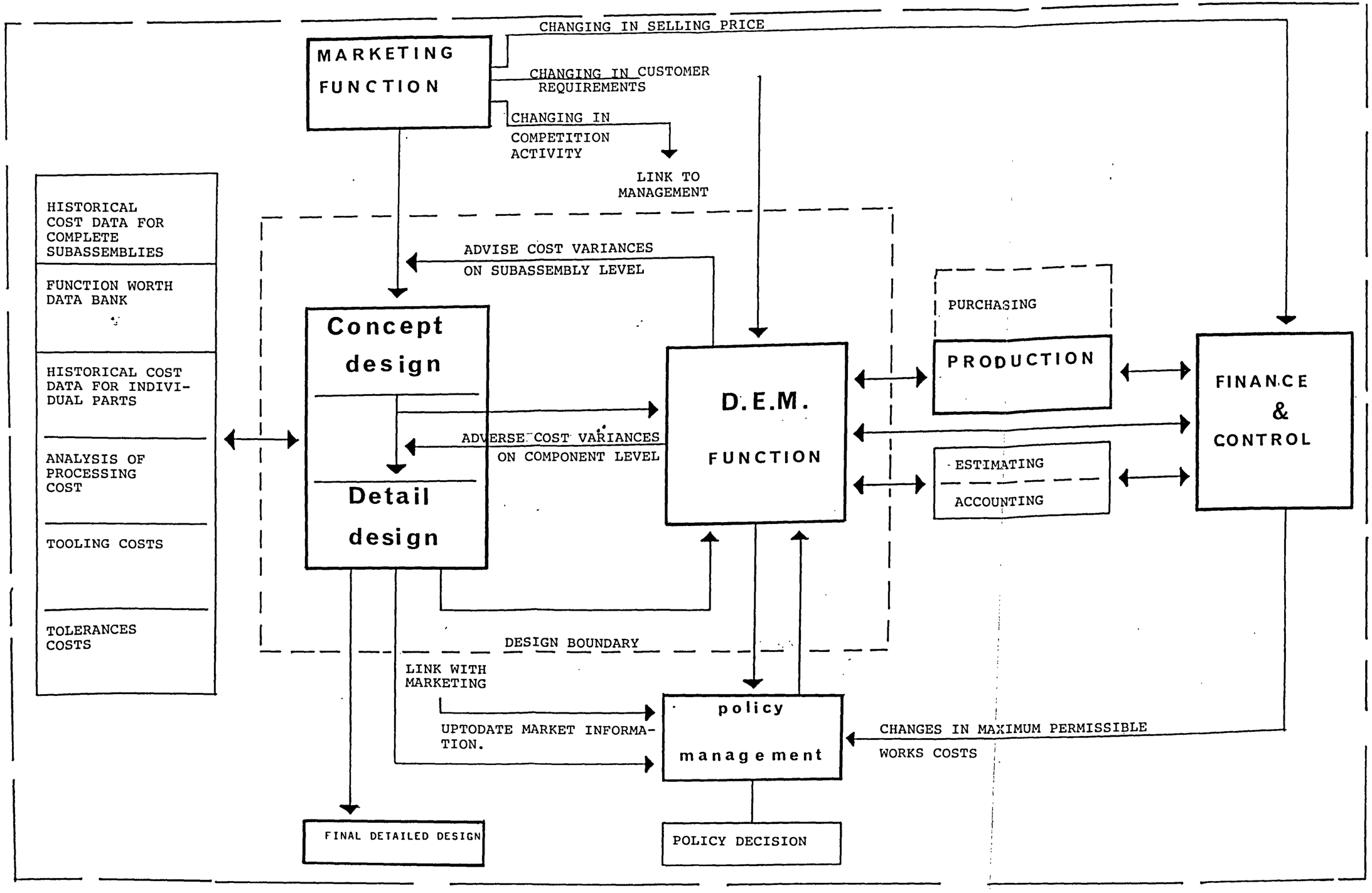

FIG.(8.15) DESIGN COST CONTROL-ORGANISATION FUNCTIONS INTERFACE

REFERENCES

1. C.A. GLADMAN , DESIGN FOR PRODUCTION . C.I.R.P.ANN (1968)16,3.10.

2. M.E.MERCHANT ,PROGRESS AND PROBLEMS IN THE APPLICATION OF NEW OPTIMISATION TECHNOLOGY IN MANUFACTURING. C.I.R.P.ANN(1968) 16, 151-161.

3. C.A. GLADMAN,DESIGN FOR PRODUCTION IN THE COMPUTER AGE. C.I.R.P.ANN(1969)17,5-12.

4. A.W.J.CHISHOLM AND B.FOGG, DESIGN FOR PRODUCTION -A TENTATIVE RESEARCH PROGRAMME FOR C.I.R.P,PRESENTED AT CIRP ASSEMBLY 1970.

5. S.N.MAWJID, J.ELLIS,A.W.J.CHISHOLM, THE INFLUENCE OF COMPONENT SHAPE AND SIZE ON PRODUCTION PROCESS SELECTION. UNIVERSITY OF SALFORD,DEPARTMENT OF MECHANICAL ENGINEERING REPORT,JULY 1973.

6. B.FOGG, G.A.JAMIESON AND A.W.J.CHISHOLM,COMPONENT CLASSIFICATION AS AN AID TO THE DESIGN OF PRESS TOOLS, C.I.R.P.ANN 19,141-151,1971.

7. B. FOGG , A.W.J.CHISHOLM, A CASE STUDY IN DESIGN FOR ECONOMIC MANUFACTURE.DESIGN FOR ECONOMIC MANUFACTURE OF GENEVA GEAR. UNIVERSITY OF SALFORD,DEPARTMENT OF MECHANICAL ENGINEERING REPORT,AUGUST 1970.

8. B.FOGG ,A.W.J. CHISHOLM , FIRST PROGRESS REPORT ON DESIGN FOR ECONOMIC MANUFACTURE, UNIVERSITY OF SALFORD, DEPARTMENT OF MECHANICAL ENGINEERING REPORT, JANUARY 1972.

9. A.W.J. CHISHOLM,DESIGN FOR ECONOMIC MANUFACTURE, C.I.R.P. ANN 22/2 243-247,1973.

10.NEIBEL,B.W. , DRAPER, A.B.PRODUCT DESIGN AND PROCESS ENGINEERING MC GROW HILL,1974.

11.CRUM,L.W. DESIGN , QUALITY CONTROL AND VALUE ENGINEERING.

12.CONWAY,H.,DESIGN AND PRODUCE, THE PRODUCTION ENGINEER, MAY 1977,21-25.

13- RUSSEL, G.,WHAT WE MEAN BY GOOD DESIGN, MECHANICAL WORLD JULY 1948 29-31.

14.PRODUCTION HAND·BOOK , SECOND EDITION, THE RONALD PRESS COMPANY , NEWYORK1959.

15.SWANN.K,MANUFACTURING MANAGEMENT, THE PRODUCTION ENGINEER -NOVEMBER 1976.

16.ROEBUC.E,MACHINE AND PROCESS CAPABILITY . ASSESMENT AND PROCESS CONTROL, THE PRODUCTION ENGINEER -JUNE 1973 225-229

17.KOENIGSBERGER,F.,COWLEY,A AND BURDEKIN , M. ASSESSING THE CAPABILITIES OF METAL CUTTING MACHINE TOOLS, THE PRODUCTION ENGINEER, JUNE 1971 248-257.

18.DESSLER,G. ORGANISATION AND MANAGEMENT ,PRENTICE-HALL INC. ,J.J.1976.

19.DAWSON, J.G. THE ENGINEERING ORGANISATION FOR HIGH VOLUME PRODUCTION OF DIESEL ENGINES, PROC. INSTN. MECH.ENG. 1963-66 VOL. 180 PT 3M.

20.MILES,L.D. TECHNIQUES OF VALUE ANALYSIS AND ENGINEERING MCGRAW HILL-1977

21.GARRAT,A. , VALUE ENGINEERING . SHEET METAL IND.,P.411-420,MAY,1969.

22.JOSEPH LUCAS,ELECTRICAL LTD., VALUE ANALYSIS & ENGINEERING COURS-MANUAL.

23. MILES,L.D. , HOW TO CUT COSTS WITH VALUE ANALYSIS. AMERICAN

MACHINIST, JULY 14,1949

24.MILES ,L.D. DOLLAR-SIGN ENGINEERING . GENERAL ELECTRIC REVIEW, MARCH,1952

25.MILES,L.D. DOLLAR-SIGN ENGINEERING (PART II) GENERAL ELECTRIC REVIEW JULY 1952.

26.JOHNSON, T. THE IMPACT OF VALUE ANALYSIS. AMERICAN MACHINIST, JULY 13,1959.

27.BUREAU OF SHIPS ,VALUE ENGINEERING MEANS REQUIRED FUNCTION AT MINIMUM COST. BUSHIPS JOURNAL, APRIL , 1955.

28.JOHNSON,R.C,VALUE ENGINEERING IN THE BUREAU OF SHIPS A.S.N.E. JOURNAL ,FEBRUARY, 1958.

29.TANGERMAN,E.J.,VALUE THE EMERGING EMPHASIS IN DESIGN (SPECIAL REPORT).PRODUCT ENGINEERING, MAY 15,1961.

30.VALUE ENGINEERING, APPLYING VALUE ENGINEERING . ELECTRONIC DESIGN, NOVEMBER 12,1958.

31.SIKORSKY,A.AND SIGNAL , J.B,VALUE ENGINEERING OF MILITARY EQUIPMENT. ELECTRONIC DESIGN , P140.143,NOVEMBER 12, 1958.

32.SHERGALIS, L.D., VALUE ENGINEERING - THAT SECOND LOOK ELECTRONIC DESIGN, NOVEMBER 12,1958.

33. H.R. LOWERS, ORDNANCE VALUE ANALYSIS, ARMAMENT TECHNOLOGY , MAY-JUNE 1959.

34. L.W. CRUM , VALUE ENGINEERING , A CHALLENGE TO MANAGEMENT THE AERONAUTICAL JOURNAL VOLUME 74 JULY 1970

35. RAWICZ-SZCZEBRBO,J., APPROACH TO COST -REDUCTION IN INDUSTRY.VALUE ANALYSIS, P 745-753 , NOVEMBER 12,1957.

36.BASIC TECHNIQUES OF VALUE ANALYSIS.
PURCHASING ,P.46-68,JUNE ,1955.

37.PURCHASING'S PART IN COST REDUCTION . PUCHASING P.39-43,JUNE ,1955.

38.LET VALUE ANALYSIS POINT THE WAY TO LARGER PROFITS THE ENIGNEER APRIL 1970

39.STILES, D.A.,FUNDAMENTALS OF VALUE ENGINEERING . SPECIAL REPORT.

40.BREWER,F.L.,VALUE ANALYSIS PURCHASING HANBOOK,H72-SECTION(8).

41.CRUM ,L.W.DESIGN , QUALITY CONTROL AND VALUE ENGINEERING .

42. SHERWIN,F.S.,THE VALUE ENGINEERING FUNCTIONAL APPROACH TECHNIQUES, VALUE ENGINEERING, P.43-48,APRIL ,1968.

43.THE PLESSEY CO.,LTD.,VALUE ENGINEERING PROJECT WORKBOOK.ISSUE NO.2,MAY,1972.

44.FALCON,CARLOS, VALUE ANALYSIS TO IMPROVE PRODUCTIVITY J-WILEY,NEWYORK,FIRST EDITION 1971.

45.FRAM , D.,A PRACTICAL APPROACH TO VALUE ANALYSIS.PRODUCT ENGINEERING, P,67-72,FEBRUARY5,1962.

46.VALUE ANALYSIS,HOW TO ANALYSE COMPONENT PARTS.PURCHASING P.40-42,MAY,1957.

47.VALUE ANALYSIS, HOW TO ANALYSE MATERIALS. PURCHASING UP.43-46,MAY,1957.

48.VALUE ANALYSIS, HOW TO ANALYSE PRICE INCREASES.PURCHASING P.50-53,MAY,1957.

49.VALUE ANALYSIS, HOW TO ANALYSE MRO SUPPLIES. PURCHASING , P 47-49,MAY 1957.

50-RUGGLES, W.F., FIRST LESSON IN VALUE ENGINEERING. PRODUCT ENGINEERING , P.43-49,DECEMBER 23,1963.

51-HUGGINS,R.T. , AND FRANK HALL . N.Y., SECOND LESSON IN VALUE ENGINEERING PRODUCT ENGINEERING, P.90-96,MARCH 30,1964.

52-VALUE ANALYSIS / ENGINEERING WORKSHOP SEMINAR CONDUCTED BY VALUE ANALYSIS INCORPORATED -HOOVER LTD., PERVIALE GREENFORD MX-DEC. 1965.

53-CHECK YOUR COMPONENT PARTS. PURCHASING , P134-154 JUNE 1955.

54-CHECK YOUR MATERIALS, PURCHASING , P70-92,JUNE ,1955

55-MUDGE, ARTHUR-VALUE ENGINEERING -1971

56.DEPARTMENT OF DEFENCE VALUE ENGINEERING HAND BOOM , GOVERNMENT PRINTING OFFICE, WASHINGTON D.C.1963.

57.HUGGINS , R.T., AND FRANKHALL N.Y.THIRD LESSON IN VALUE ENGINEERING. PRODUCT ENGINEERING, P91-103,JUNE 22,1964

58-BY THE WAY, C.W., LESSON V IN VALUE ENGINEERIN G. PRODUCT ENGINEERING, P61-67,AUGUST 30, 1965.

59.PRODUCT PLANNING & MANAGEMENT , BENEFITS OF VALUE ANALYSIS ARE KEYED TO ITS TIMING.PRODUCT ENGINEERING , P.112-116, AUGUST 28,1967.

60.FOWLKES, J.K. RUGGLES, W.F. AND GROOTHUIS, J.D., ADVANCED FAST DIAGRAMING. PROC. OF THE SAVE CORP.,P.45-52

61.LEE, J.H, IMPROVED COST CONTROL BY FUNCTION COST ANALYSIS. INFORMATION SYSTEMS FOR DESIGNERS UNIVERSITY OF SOUTHAMPTON, P 19-25,1977.

62-MUDGE,A.E.,THE NUMERICAL EVALUATIONOF FUNCTIONAL

RELATIONSHIPS.VALUE ENGINEERING, P169-175,SEPTEMBER,1968

63.METAL WORKING PRODUCTION A MC.GRAW HILL WEEKLY PUBL.,DESIGNING FOR LOW COST PRODUCTION PROCESS.SEPTEMEBR 2,1964,

64.LESLIE, H.L.G., ELIMINATE REDESIGN WITH THIS DESIGN GUIDE TO VALUE. PRODUCT ENGINEERING ,P.80-89,OCTOBER 28,1963.

65.FRICK,H.,FIND LOWEST PROCESS COST WITH THIS DESIGNGUIDE TO VALUE-II .PRODCUT ENGINEERING, P46-53,MARCH ,2,1964

66.VALUE CONTROL DESIGN GUIDE, PROPERTY OF VALUE ANALYSIS INC, 1963,

67.FASAL ,J., A MATHEMATICAL TOOL FOR VALUE ENGINEERING FORCED DECISIONS FOR VALUE. PRODUCT ENGINEERING, P.84-86,APRIL12,1965.

68.VALUE ASSURANCE CHECKLIST FOR PRODUCT DESIGN.VALUE ENGINEERING, P.37-41,APRIL , 1968.

69.CRUM , L.W.,VALUE ENGINEERING, THE ROGANISED SEARCH FOR VALUE, 1971.

70.BRITISH POST OFFICE, VA REPORT 48,MDF CABLE TERMINATING UNIT, 1974.

71.CRUM , L.W. DESIGNING FOR PRODUCTION . DESSIGN INTERFACE '76 CONFERENCE , 21/22ND OCTOBER ,1976.

72.CRUM, L.W. , PROCEDURES FOR PRODUCT COST CONTROL IN ENGINEERING AND MANUFACTURING . CRM ISSUE 4, JUNE , 1981.

73.HORLOCK , J.H, AND NORBUTY , J.F. , THE ACRO-THERMO. DYNAMICS OF SUBSONIC PRO PULSION. ANNALS OF THE NEWYORK ACADEMY OF SCHIENCES, VOL 154,ARTICLE 2,P.549-575,NOVEMBER 22,1968.

74.EPTIS, E.M. AND WILDE , G.L. , THE ROLLS-ROYCE RB 211 TURBOFAN ENGINNE. PROC. INSTN. MECH. ENGRS, COL. 188,P.37-74,1974.

75.CME'S INDUSTRIAL EDITOR, ARE CASTINGS CASTING OUT FORGINGS?.IMECH E -CME P4-5 , JULY, 1975

76.BALDWIN , G.G. , PRODUCTION OF FORGED HOOLLOW TURBINE BLADES. I MECH E, CME , P73.76, MAY , 1976.