Architectures and Dynamic Bandwidth Allocation Algorithms for Next Generation Optical Access Networks

Abhishek Dixit

Promotoren: prof. dr. ir. D. Colle, dr. ir. B. Lannoo
Proefschrift ingediend tot het behalen van de graad van
Doctor in de Ingenieurswetenschappen: Computerwetenschappen

Vakgroep Informatietechnologie
Voorzitter: prof. dr. ir. D. De Zutter
Faculteit Ingenieurswetenschappen en Architectuur
Academiejaar 2014 - 2015

UNIVERSITEIT GENT

ISBN 978-90-8578-743-3
NUR 986, 988
Wettelijk depot: D/2014/10.500/89

Ghent University
Faculty of Engineering and Architecture
Department of Information Technology

Promoters: Prof. Didier Colle
Dr. Bart Lannoo

Jury members: Prof. Luc Taerwe, Ghent University (Chairman)
Prof. Mario Pickavet, Ghent University (Secretary)
Prof. Didier Colle, Ghent University (Supervisor)
Dr. Bart Lannoo, Ghent University (Supervisor)
Dr. Björn Skubic, Ericsson Research
Dr. Wouter Tavernier, Ghent University
Dr. Luca Valcarenghi, Scuola Superiore Sant'Anna di Pisa
Prof. Joris Walraevens, Ghent University

Ghent University
Faculty of Engineering and Architecture

Department of Information technology
Gaston Crommenlaan 8, bus 201
B-9050 Ghent, Belgium

Tel: +32 9 331 49 77
Fax: +32 9 331 48 99
Web: http://www.intec.ugent.be

Dissertation to obtain the degree of
Doctor of Computer Science Engineering
Academic year 2014-2015

Acknowledgements

Finally, the four years of avoiding real world are going to be over. The pursuit of a PhD is never easy, rather full of Herculean and arduous challenges. Thankfully, there are many people around you, who support you directly or indirectly.

First, I would like to thank my supervisors, Prof. Didier Colle and Dr. Bart Lannoo, for the immense support and help that they extended in critically reviewing my work, for providing great research ideas, and for keeping me motivated throughout. Without their excellent guidance and support, both at a professional and at a personal level, it would not have been possible for me to have a successful research work. I believe that their continuous support will always be there for me throughout my future career.

I am also deeply grateful to Prof. Mario Pickavet and Prof. Piet Demeester, who have given me an opportunity to work at iMinds. Their efforts have created an excellent environment for PhD students to outshine. Not only this, but your feedback and support at all difficult times, have been very valuable; and I am indeed very grateful for this.

I also thank jury members − Prof. Luc Taerwe, Dr. Björn Skubic, Dr. Luca Valcarenghi, Dr. Wouter Tavernier, and Prof. Joris Walraevens − for thoroughly evaluating my work and for their valuable comments on my PhD thesis.

I would also like to thank my colleagues – Koen, Sofie, Marlies − and other partners from the FP7 OASE project; the useful discussions and brainstorming at the project have always provided very useful insights.

I would also like to thank my all other co-authors − Jiajia, Lena, Mozhgan, Goutam, Chayan, Marlies, and Sofie − whose co-operation and support was indeed very helpful. Thank you all for your valuable feedback and efforts! I would also especially like to thank Goutam, whose support in the initial years of PhD has helped me immeasurably. I would also thank Prof. Anand Srivastava and Prof. Norvold Stol for the interesting discussions we had during my PhD.

I express my gratitude to Ghent University for providing me the platform to successfully carry out my research work, and to all the members of IBCN research group for providing me useful feedbacks, both on how to deal with the

new culture and on how to handle PhD. I would also like to thank the secretariat – Martine and Davinia − and other staff members at IBCN who have made my stay comfortable and pleasant.

I would also like to thank my office colleagues − Wouter, Sachin, Sahel, Dimitri, Sander, Thijs, Maarten, Ludwig, Rodrigo, Sofie, Ward, Sofie, Bart, Willem, Florian, Farhan, Krishnan, Prashant, Selva, Elizabeth, and Arun, − whose company at lunch, at discussions, and at get-togethers, kept me spirited. You all are special part of my life, people in the same boat as me, and thus connecting to you was and will always be special. Sachin, thanks for helping me in several ways, and for teaching me to cook Indian food. Sahel, for introducing me to the Iranian culture, thank you. Dimitri − bike trips, chess games, and that you took all the pain to travel to as far as India for my marriage − was special for me. Sander, for Turkish lunches, and Wouter, for Soup-bar, thank you. Thijs, for introducing me to the Belgian weddings, and Maarten and Ludwig, for interesting lunchtime gossips, thank you. Ward and Sofie, special thanks for motivating me to be more green-aware, I come to office by bike now!

Besides, there are many friends from Cricket – Ark, Ashok, Aditya, Ananth, Amit, Karthik, Manan, Prasoon, Praveen, Sandeep, Sameer, Sanjeev, Shailesh, Sarvagya, Vishvas, and others − and from other social gatherings – Nandini (special thanks for organizing the defense), Sachin, Chetna, Kirti, Vatsala, Kaustav, Chetan, Sharoni, Lalithya, Namrata, Kamalpreet, Pankaj, Aditya, and Dinesh − who have been my second family, and who have never allowed me to feel away from home. Playing Cricket on every Saturday with you has kept me fit and motivated to work rigorously for the rest of the week. I also enjoyed dinning with you almost every other day. In this context, I would also thank Uncle Mario, especially Sandeep ji, for making such delicious food for us. I also thank my childhood friend Mudit, who came to meet me several times, and took many pictures of me. I wish you good luck, as soon you will be a father.

This acknowledgment will be incomplete if I fail to mention my entire family: parents, sisters, brothers-in-law, nephews, nieces, and my wife. I am grateful to my parents for their education and support; it is to my parents that I dedicate this PhD. You have been the real mentor of my emotions, my character and me. My sisters and brothers-in-law, it was your love, support, blessings, and WhatsApp jokes that I was never far from home. My sweet nephews and nieces, sometimes most valuable lessons of life are hidden in the simplicity of your smiles, and in your ability to live life stress free. Finally, I am grateful to my wife, Richa, for her patience, love and understanding, all throughout my life. I am blessed that I have you, and now I can walk on any journey for you are by my side.

Ghent, October 2014

Abhishek.

Table of Contents

List of Figures

List of Tables

List of Acronyms

A

ADSL	Asymmetric Subscriber Digital Loop
AON	Active Optical Network
APD	Avalanche Photo Diode
APON	ATM PON
ASE	Amplified Spontaneous Emission
AWG	Arrayed Waveguide Grating

B

BM	Burst Mode
BPON	Broadband PON
BRAS	Broadband Remote Access Server
BS	Band Splitter

C

CA	Collision Avoidance
CapEx	Capital Expenditure
CAN	Central Access Node
CD	Collision Detection
CDMA	Code Division Multiple Access
CDR	Clock and Data Recovery
CO	Central Office
CPE	Customer Premises Equipment
CSMA	Carrier Sense Multiple Access
CU	Cost Unit

D

D&DBG	Data And Distance Based Grouping
DBA	Dynamic Bandwidth Allocation
DF	Distribution Fiber
DFB	Distributed Feed Back
DSL	Digital Subscriber Loop

DSLAM	Digital Subscriber Line Access Multiplexer
DWDM	Dense Wavelength Division Multiplexing

E

EA	Ethernet Aggregator
EC	Energy Consumption
EDC	Electronic Dispersion Compensation
EDFA	Erbium Doped Fiber Amplifier
EOL	End Of Life
EPON	Ethernet Passive Optical Network

F

FCFS	First Come First Serve
FF	Feeder Fiber
FI	Failure Impact
FP-LD	Fabry–Perot Laser Diodes
FSAN	Full Service Access Network
FSR	Free Spectral Range
FTE	Full Time Equivalent
FTTB	Fiber To The Building
FTTC	Fiber To The Curb
FTTH	Fiber To The Home

G

GbE	Gigabit Ethernet
GPON	Gigabit Passive Optical Network

H

HFC	Hybrid Fiber Coax

I

ICMP	Internet Control Message Protocol
ICT	Information and Communication Technology
IP	Internet Protocol
IPACT	Interleaved Polling with Adaptive Cycle Time
IPTV	Internet Protocol based TeleVision
ISDN	Integrated Service Digital Network
ISP	Internet Service Provider

L

LAN	Local Access Network

LE	Local Exchange
LMF	Last Mile Fiber
L-ONU	Legacy-Optical Network Unit
LPI	Low Power Idle
LR-PONs	Long Reach Passive Optical Networks

M

MAC	Medium Access Control
MPCP	Multi-Point Control Protocol
MPLS	Multi-Protocol Label Switching
MTBF	Mean Time Between Failures
MTTR	Mean Time To Repair
MWR	Manual Wavelength Router

N

NGOA	Next Generation Optical Access
NG-ONUs	Next Generation ONUs
NOF	Network Overloading Factor
NP	Network Provider

O

OA	Optical Access
OADM	Optical Add Drop Multiplexer
OASE	Optical Access Seamless Evolution
OAI	Open Access Interface
OC	Orthogonal Coding
OCDM	Orthogonal Code Division Multiplexing
ODF	Optical Distribution Frame
ODN	Optical Distribution Network
OFDM	Orthogonal Frequency Division Multiplexing
OLT	Optical Line Terminal
ONU	Optical Network Unit
OpEx	Operational Expenditure
OR	Optical Router
OSI	Open Systems Interconnection

P

P2P	Point To Point
P2MP	Point To Multi-Point
PC	Power Consumption
PD	Photo Diode

PIC	Photonic Integrated Circuit
PIN	Positive Intrinsic Negative
PIP	Physical Infrastructure Provider
PON	Passive Optical Network
PoU	Point of Unbundling
PS	Power Splitter

Q

QoS	Quality of Service

R

Rx	Receiver
RN	Remote Node
RTT	Round Trip Time

S

S-AMGAV	Synergized Adaptive Multi-GAte polling with Void filling
SDH	Synchronous Digital Hierarchy
SDN	Software Defined Networking
SLIC	Subscriber Line Interface Circuit
SMA	Sleep Mode Aware
SOA	Semiconductor Optical Amplifier
SoC	System on Chip
SONET	Synchronous Optical NETwork
SP	Service Provider
SSLED	Spectrum Sliced Light Emitting Diode

T

Tx	Transmitter
TDM	Time Division Multiplexing
TDMA	Time Division Multiple Access
TRX	Transceiver
TRXA	Transceiver Array
TRXAB	Transceiver Array Bank
TWDM	Time and Wavelength Division Multiplexed

U

UNI	User Network Interface
US	United States
USR	Unused Slot Remainder
USWA	Upstream Scheduling and Wavelength Assignment

UDWDM	Ultra Dense Wavelength Division Multiplexing

V

VCSEL	Vertical Cavity Surface Emitting based Laser
VDSL	Very high data rate Digital subscriber Loop
VLAN	Virtual Local Access Network
VoD	Video on Demand
VPN	Virtual Private Network

W

WAF	Wavelength Access Filter
WCDMA	Wide band Code Division Multiple Access
WDM	Wavelength Division Multiplexed
WDMA	Wavelength Division Multiple Access
WSS	Wavelength Selective Switch

Samenvatting
– Summary in Dutch –

In dit proefschrift richten we ons op breedbandtoegangsnetwerken, waarmee gebruikers verbinding maken met hun dichtsbijzijnde Internet service providers, maar die nog steeds het belangrijkste knelpunt vormen in het leveren van bandbreedte-intensieve diensten. Tegenwoordig evolueren deze netwerken naar fiber-to-the home (FTTH) netwerken, waarbij een gebruiker rechtstreeks via een optische vezel verbonden is met het Internet. De optische vezel met haar enorm bandbreedte-potentieel biedt het geschikte transmissiemedium om bandbreedte-intensieve applicaties te ondersteunen. Optische vezeltechnologie wordt derhalve al geruime tijd beschouwd voor het aanbieden van een toekomstgericht toegangsnetwerk met een hoge bandbreedte.

Momenteel worden een aantal netwerken met uiteenlopende FTTH standaarden reeds uitgerold in verschillende delen van de wereld. Deze netwerken maken vaak gebruik van ofwel een passieve component ofwel een actieve switch in een afgelegen knooppunt (remote node, RN), dat zich bevindt tussen een optical line terminal (OLT, in de centrale (central office, CO)) en de optical network units (ONU's, bij de klant). Deze netwerken worden aangeduid als respectievelijk passieve optische netwerken (PON's) en actieve optische netwerken (AON's). Momenteel worden er twee PON varianten - Ethernet PON (EPON) en Gigabit PON (GPON) - op grote schaal uitgerold[1]. Vanuit een architecturaal oogpunt maken EPON (biedt tot 1 Gb/s in stroomafwaartse[2] richting) en GPON (biedt tot 2,5 Gb/s in stroomafwaartse richting) gebruik van een vermogensplitter in de RN en zij gebruiken een time division multiple access (TDMA) gebaseerd medium access control (MAC) protocol om de bandbreedte te verdelen onder de gebruikers. Het heeft echter niet lang geduurd voordat men zich heeft gerealiseerd dat deze netwerken ook voortdurend moeten worden verbeterd om het hoofd te bieden aan de steeds toenemende

[1] AON wordt ook uitgerold in sommige delen van de wereld, zoals in Zweden en Nederland.
[2] Stroomafwaarts is van de OLT naar een ONU.

bandbreedtebehoeften, welke volgende generatie[3] optische toegangs- (next-generation optical access, NGOA) netwerken vereisen.

Verschillende onderzoekspapers, -projecten en -groepen voerden onderzoek uit om het optimale NGOA netwerk te definiëren. Bijvoorbeeld, de full-service access network (FSAN) groep koos time and wavelength division multiplexed (TWDM) en wavelength division multiplexed (WDM) PON als de kandidaten voor de volgende generatie toegangssystemen, of de next-generation-PON2 in FSAN terminologie.

De evolutie van de netwerken gaat in de richting van het leveren van een hogere bandbreedte capaciteit, terwijl de investeringen van de netwerkoperator worden geoptimaliseerd. Voortbouwend op deze doelen zullen de nieuwe eisen zijn: een betere kwaliteit van de dienstverlening (quality of service, QoS), een groter bereik, hogere energie-efficiëntie, herstelvermogen, en open toegang of open access (gedeelde infrastructuur onder de vele dienstverleners of service providers). Deze eisen vormden de criteria voor het onderzoek van de optimale kandidaat voor NGOA netwerken. Dit proefschrift richt zich op de uitbreiding van deze eisen in het kader van NGOA netwerken. De bovengenoemde problemen hebben aandacht nodig op zowel het niveau van de toewijzing van bandbreedte resources als op het niveau van architecturaal ontwerp. Met dit onderscheid in het achterhoofd gaan hoofdstukken 2, 3, en 4 over de dynamische toewijzing van bandbreedte (dynamic bandwidth allocation, DBA) algoritmen, terwijl hoofdstukken 5, 6, 7 en 8 de architecturale ontwerpen behandelen. Dit boek heeft ook drie bijlagen. De details van de hoofdstukken en de bijlagen zijn beschreven in de volgende paragrafen.

Hoofdstuk 1 introduceert optische toegangsnetwerken en schetst de uitdagingen die tijdens het onderzoek worden aangepakt. Het geeft een schets van de inhoud en de bijdragen van het boek, en het lijst de belangrijkste publicaties op in de loop van het onderzoek.

Hoofdstuk 2 richt zich op de vertragingsmodellen voor de DBA-algoritmen van EPON. De modellen kunnen echter worden toegepast op elk van de volgende generatie PON systemen met een logische verbinding vergelijkbaar aan EPON. Bijvoorbeeld vele varianten van lange afstands PON (long-reach PON, LR-PON) en TWDM-PON kunnen deze modellen gebruiken. De vertragingsmodellen helpen ons bij het analyseren van verscheidene DBA paradigma's en hun bruikbaarheid in verschillende scenario's. Zij leggen ook de kritische oorzaken van inefficiënties bloot in de huidige DBA-algoritmen, wat nuttige inzichten met zich meebrengt om nieuwe algoritmen te ontwikkelen. Bijvoorbeeld, een van de belangrijkste bronnen van inefficiënties is de afhankelijkheid van de vertraging van de heen-en terugreistijd (round trip time,

[3] De volgende generatie wordt aangeduid als de ontwikkeling na de huidige gestandardizeerde TDMA-PON architecturen zoals X-Gigabit PON en 10G Ethernet PON.

RTT) tussen de centrale en de gebruikers, en nieuwe algoritmen moeten worden ontwikkeld om deze afhankelijkheid te verwijderen.

Voortbouwend op hoofdstuk 2 stelt **hoofdstuk 3** een nieuw algoritme voor, dat we aanduiden als synergized-adaptive multi-gate polling with void filling (S-AMGAV), om het kwaliteitsverlies aan te pakken dat wordt ervaren door de huidige algoritmen voor langeafstands PONs. S-AMGAV combineert optimaal belastingsadaptieve multi-gate polling met belastingsbewuste pre-grant sizing (aangeduid als void filling). De belastingsadaptieve multi-gate polling maakt gebruik van een adaptief aantal parallelle draden of threads (GATEs) die de ONUs ondervragen of pollen onafhankelijk van het bereik. Aan de andere kant reserveert belastingsbewuste pre-grant sizing de pakkettransmissie in overeenstemming met de belasting. S-AMGAV verwijdert de typische afhankelijkheid van de pakketvertraging op de RTT en bereikt een aanzienlijke verbetering (tenminste 50%) in pakketvertraging en kanaalgebruik vergeleken met de huidige state-of-the-art algoritmen.

Hoofdstuk 4 presenteert een nieuw algoritme voor energie-efficiëntie in EPONs. Momenteel verbruiken de ONUs 60-70% van de energie in de FTTH-netwerken. Grote energiewinst kan worden verkregen door het inschakelen van slaapstanden op de ONUs. De winsten hangen af van andere factoren, zoals de overhead voor de overgang van slaap naar actieve stand, en de netwerkbelasting. De DBA algoritmen moeten dus geoptimaliseerd worden voor deze factoren. Een duidelijk onderscheid moet worden gemaakt tussen de volgende generatie ONU’s (next-generation ONUs, NG-ONU's) die volgende generatie technologie gebruiken en legacy ONU's (L-ONU's) die al uitgerold werden. Deze twee types ONU’s brengen andere slaapoverheads met zich mee, en moeten dus anders worden behandeld. In deze context maken we gebruik van twee soorten slaapstanden: a) cyclische slaap waarin een ONU in elke cyclus[4] slaapt, en b) diepe slaap waarin een ONU over meerdere cycli slaapt. Afhankelijk van de netwerkbelasting en andere simulatieparameters behalen de voorgestelde algoritmes energiebesparingen van ongeveer 70-80% voor NG-ONU's en van ongeveer 30-70% voor L-ONU's.

Hoofdstuk 5 evalueert de energie-efficiëntie van diverse energiebesparende standen (slaap- en dommelstanden) van de ONU’s voor verschillende technologieën (EPON, 10G-EPON, 40G-TDMA-PON, WDM-PON, TWDM-PON, punt-tot-punt (PTP) en AON). Het is duidelijk dat door de toepassing van energiebesparende standen, het stroomverbruik van de technologieën aanzienlijk kan worden verminderd. De invloed van energiebesparende standen zal echter anders zijn voor elke technologie en moet dus grondig worden geëvalueerd. Zoals blijkt uit de resultaten gebruiken sommige technologieën - 40G-TDMA-PON, TWDM-PON - die een hoger vermogen verbruiken in de actieve stand

[4] Tijdsinterval tussen twee opeenvolgende pollings van een ONU.

minder vermogen wanneer slaapstanden worden toegepast in vergelijking met andere technologieën vanwege hun mogelijkheid om meer te slapen. Zo moeten de effecten van energiebesparende standen meergerekend worden voor een meer representatief beeld van het stroomverbruik.

Met de ontwikkeling van optische toegangsnetwerken zijn andere ontwerpparameters, zoals betrouwbaarheid en open toegang (open access) ook belangrijk. NGOA architecturen hebben langere vezellengtes, met een hogere waarschijnlijkheid om verbroken te worden, bevatten componenten met een hogere complexiteit, en hebben meer klanten op één PON segment. Deze factoren vereisen meer betrouwbaarheidsmechanismen dan voorheen. **Hoofdstuk 6** presenteert de kostenefficiënte protectieschema's voor TWDM- en WDM-PON. Om op gepaste wijze de netwerkbetrouwbaarheidsprestatie te beoordelen stellen we eveneens een nieuwe metriek voor, aangeduid als falingsimpact (FI). De FI geeft meer gewicht aan het aantal klanten dat door een faling beïnvloed wordt dan aan de gemiddelde duur van een faling. Op deze manier is het beter geschikt voor de irrationele omgeving waarin de netbeheerders zich vaak meer zorgen maken over één defect bij een groot aantal klanten, dan veel niet-gecorreleerde storingen die voor een onderbreking bij minder klanten zorgt terwijl die laatste zelfs tot dezelfde gemiddelde falingsduur kunnen leiden. Verder stellen we vier verschillende protectieschema's voor voor beide architecturen. De voorgestelde schema's realiseren end-to-end bescherming voor zakelijke gebruikers, en OLT en feeder-fiber (FF) bescherming voor particuliere gebruikers. De voorgestelde schema's worden geanalyseerd op het vlak van protectiedekking, beschikbaarheid, FI en kost, voor verschillende scenario's met een uiteenlopende bevolkingsdichtheid.

Hoofdstuk 7 geeft de architecturen om open toegang op het niveau van de vezel en de golflengte te ondersteunen in NGPON-2. Open toegang verwijst naar het delen van een netwerkinfrastructuur tussen verschillende netwerkentiteiten op een niet-discriminerende wijze. Open toegang verlaagt de barrière voor de toegang tot het netwerk, en stimuleert dus de deelname van zelfs kleine netwerkspelers. Dit leidt tot een multi-dienstverlener scenario, dat competitie en lagere dienstenprijzen aanmoedigt. Een van de vele dienstverleners kan worden geselecteerd door een gebruiker op het niveau van de vezel, golflengte, of pakket (bitstream). Dit classificeert open toegang als vezel-, golflengte- of bit-stream open toegang. Vezel en golflengte open toegang vereisen nieuwe architecturen. We identificeerden twee interfaces waarop de netwerken kunnen worden geopend – RN en OLT. We introduceren ook veel punten van unbundling (points of unbundling, PoUs), die kunnen worden gedefinieerd als het eerste punt waarop verschillende (minstens twee) netwerk providers (NP) of service providers (SP's) bij elkaar worden gebracht op hetzelfde apparaat (bijvoorbeeld glasvezelkabel, vermogensplitter, golflengte router, Ethernet-switch). Al deze oplossingen hebben elk hun eigen ontwerpafwegingen, en er is geen duidelijke

allesomvattende oplossing. De selectie vereist een grondige analyse van de impact van de ontwerpafwegingen, die we vertalen in een netwerkkost. Vervolgens vergelijken we de voorgestelde architecturen met betrekking tot de kosten (relevante kapitaal en operationele uitgaven), en analyseren de impact van de adoptieniveaus (percentage gebruikers geabonneerd) en de churn rate van de klanten (hoe vaak de klanten veranderen van provider) op de kosten van de architecturen.

In **hoofdstuk 8** onderzoeken we de optimale mate van netwerkflexibiliteit die nodig is voor de toewijzing van bandbreedte resources. Het netwerk kan worden ontworpen met volledige flexibiliteit (elke gebruiker krijgt toegang tot alle beschikbare golflengten op elk tijdstip) of gedeeltelijke flexibiliteit (een gebruiker krijgt enkel toegang tot bepaalde golflengten). Een grotere flexibiliteit kan het aantal golflengten gebruikt door de OLT minimaliseren, wat leidt tot energie-efficiëntie, maar het brengt verschillende nadelen mee: veiligheid, insertion loss, etc. Na diepgaande simulaties concluderen we eerst dat een gedeeltelijk flexibel netwerk al genoeg winst kan bieden in vergelijking met een volledig flexibel netwerk, en een volledig flexibele architectuur is nooit echt nodig. Op basis van dit inzicht stellen we een nieuwe architecturale variant van TWDM-PON voor, die een cascadeconfiguratie gebruikt van golflengte selectieve schakelaars (wavelength selective switches, WSS's) en arrayed waveguide gratings[5] (AWGs), die golflengte geschakelde TWDM-PON wordt genoemd. WSS's voegen flexibiliteit toe voor de toewijzing van bandbreedte resources, terwijl AWGs de netwerk fanout verhogen zonder toevoeging van aanzienlijke insertion loss. Daarnaast vergelijken we golflengte geschakelde TWDM-PON met andere TWDM-PON varianten en vinden dat golflengte geschakelde TWDM-PON tegemoetkomt aan de flexibiliteit voordelen zonder substantiële toevoeging van kosten, energieverbruik en insertion loss. Ten slotte stellen we ook een energiebesparende regeling voor voor golflengte geschakelde TWDM-PON, dat het potentieel heeft om tot 60% energie te besparen bij de OLT.

Hoofdstuk 9 bevat de conclusies en toekomstige onderzoeksrichtingen.

Dit werk is ook aangevuld met drie appendices. In **Appendix A** wordt het werk gepresenteerd in hoofdstuk 5, over de evaluatie van de ONU energiebesparende standen voor NGOA architecturen, uitgebreid om de energiebesparende mogelijkheden van zowel de OLT als de ONU te omvatten. In **Appendix B** presenteren we een energiebesparend DBA-algoritme voor TWDM-PON. Dit werk combineert het werk gedaan in hoofdstuk 4 met het idee van het uitschakelen van ongebruikte golflengten gepresenteerd in hoofdstuk 8. In **Appendix C** presenteren we een nieuw algoritme om de prestatievermindering in

[5] Een AWG wordt algemeen gebruikt voor (de)multiplexen van optische golflengten in WDM systemen.

TWDM-PON aan te pakken ten gevolge van overmatig golflengte-schakelen wat de extra overhead vanwege de tuning tijd de hoogte in jaagt.

Summary

In this dissertation, we focus on broadband access networks, which connect users to their immediate Internet service providers, but still pose the main gridlock in providing bandwidth-intensive services. Today, these networks are evolving toward fiber-to-the home (FTTH) networks, in which a user is connected with the Internet directly over an optical fiber. The optical fiber with its huge bandwidth potential provides the right transmission medium to support bandwidth hungry applications. Optical fiber technology has thus been envisioned for a long time to provide a high-bandwidth and a future-proof access network.

Currently, some standards of FTTH networks are already being deployed in different parts of the world. These networks often use either a passive component or an active switch at the remote node (RN), which is between an optical line terminal (OLT, at the central office (CO)) and the optical network units (ONUs, at the customer's premises). These networks are referred to as passive optical networks (PONs) and active optical networks (AONs), respectively. Currently, two flavors of PONs – Ethernet PON (EPON) and Gigabit PON (GPON) − are widely deployed[6]. From an architectural perspective, EPON (offers up to 1 Gb/s in downstream[7] direction) and GPON (offers up to 2.5 Gb/s in downstream direction) use a power splitter at the RN and use a time division multiple access (TDMA) based medium access control (MAC) protocol to distribute the bandwidth among users. However, it has not been long before it is realized that these networks should also be continually enhanced to cope with the ever-increasing bandwidth requirements, requiring next generation[8] optical access (NGOA) networks.

Several papers, projects, and groups conducted research to define the optimal NGOA network. For example, the full service access network (FSAN) group chose time and wavelength division multiplexed (TWDM) and wavelength

[6] AON is also deployed in some parts of the world, particularly in Sweden and the Netherlands.
[7] Downstream direction is from the OLT to an ONU.
[8] The next generation is referred to as the development beyond currently standardized time division multiplexed passive optical network (TDM-PON) architectures such as X-Gigabit PON, and 10G-Ethernet PON.

division multiplexed (WDM) PON as the candidates for next generation access systems, or next generation-PON2 in FSAN terminology.

The evolution of the networks should be toward supplying higher bandwidth capacities, while optimizing the network operator's investment. Ensuing from these goals, the new requirements will be of a better quality of service (QoS), a longer reach, higher energy efficiency, resilience, and open access (shared infrastructure among many service providers). These requirements formed the criteria for the investigation of the optimal candidate for NGOA networks. This dissertation focuses on extending these requirements in the context of NGOA networks. The above-mentioned problems need attention on both the level of resource allocation and the level of architectural design. With this separation in mind, Chapters 2, 3, and 4 deal with dynamic bandwidth allocation (DBA) algorithms, whereas Chapters 5, 6, 7 and 8 deal with architectural designs. This book also has three appendices. The details of the chapters and the appendices are outlined in the following paragraphs.

Chapter 1 introduces optical access networks and outlines the challenges that are tackled during the research. It gives a sketch of the content and contributions of the book, and lists the main publications obtained during the course of the research.

Chapter 2 focuses on the delay models for the DBA algorithms of EPON. The models, however, can be applied to any next generation PON system that has a logical connectivity similar to EPON. For example, many variants of long-reach PON (LR-PON) and TWDM-PON can use these models. The delay models help us in analyzing a variety of DBA paradigms and their utility in different scenarios. They also expose the critical sources of inefficiencies existing in the current DBA algorithms, furnishing useful insights to develop new algorithms. For example, one of the main sources of the inefficiencies is the dependence of the delay on the round trip time (RTT) between the CO and the users, and thus novel algorithms should be tailored for removing this reach dependence.

Building on Chapter 2, **Chapter 3** proposes a novel algorithm, which we refer to as synergized-adaptive multi-gate polling with void filling (S-AMGAV), to tackle the performance degradation that is experienced by the current algorithms for long-reach PONs. S-AMGAV optimally combines load adaptive multi-gate polling with load aware pre-grant sizing (referred to as void filling). This adaptive multi-gate polling uses a number of parallel threads (GATEs) that is adaptive to the load, and thereby polls ONUs optimally. On the other hand, load aware pre-grant sizing preempts the packets transmission in consonance with the load. S-AMGAV removes the typical dependence of the packet delay on the RTT, and is shown to achieve a considerable improvement (at least 50%) in packet delay and channel utilization compared to the current state-of-the-art

algorithms.

Chapter 4 presents a novel algorithm for energy efficiency in EPONs. Currently, the ONUs consume 60-70% of the energy in FTTH networks. Large energy gains can be procured by enabling sleep modes at the ONUs. The gains depend upon other factors, like the overheads in making a transition from sleep to active state, and the network load. Thus, the DBA algorithm must be optimized to these factors. A clear distinction has to be made between next generation ONUs (NG-ONUs) that use next generation technology and legacy ONUs (L-ONUs) that are already deployed in the field. These two types of ONUs impose different sleep overheads, and thus they should be treated differently. In this context, we exploit two kinds of sleep modes: a) cyclic sleep in which an ONU sleeps in every cycle[9], and b) deep sleep in which an ONU sleeps over multiple cycles. Depending upon the network load and other simulation parameters, the proposed algorithms achieve energy savings of about 70-80% for NG-ONUs and of about 30-70% for L-ONUs.

Chapter 5 evaluates the energy efficiency of various low power modes (sleep and doze modes) of the ONUs for different technologies (EPON, 10G-EPON, 40G-TDMA-PON, WDM-PON, TWDM-PON, point-to-point (PtP) and AON). It is clear that by the application of low power modes, the power consumption of the technologies can be reduced significantly. However, the effect of low power modes on each technology will be different and thus must be thoroughly evaluated. As it is clear from the results, when sleep modes are applied, some technologies − 40G-TDMA-PON, TWDM-PON − that consume higher power in the active state actually use lower power compared to other technologies due to their ability to sleep more. Thus, the effects of low power modes must be accounted for a more representative view on power consumption.

With the evolution of optical access networks, other design parameters like reliability and open access are also important. NGOA architectures have longer fiber lengths with a higher fiber cut probability, they include components with a higher complexity, and there are more customers on a single PON segment. These factors necessitate reliability mechanisms more than before. **Chapter 6** presents the cost-efficient protection schemes for TWDM- and WDM-PON. For appropriately evaluating the network reliability performance, we also propose a new metric, referred to as the failure impact (FI). The FI gives more weight to the number of customers affected by a failure compared to the average time of a failure. In this way, it is better suited for the irrational environment in which the network operators are often more worried about a single failure affecting a large number of customers than many uncorrelated failures disconnecting fewer customers while leading to the same average failure time. In addition, we

[9] Time interval between two successive pollings of an ONU.

propose four different protection schemes for both architectures. The proposed schemes realize end-to-end protection for business users, and OLT and feeder fiber (FF) protection for residential users. The proposed schemes are analyzed for protection coverage, availability, FI and cost, in different populated scenarios.

Chapter 7 presents the architectures to support fiber and wavelength open access in NGPON-2. Open access refers to the sharing of a network infrastructure among different network entities in a non-discriminatory way. Open access reduces the barrier for entry into the network, and thus encourages the participation of even small network players. This leads to a multi service-provider scenario, encouraging competition and reduced price of services. One out of many service providers can be selected by a user on the fiber, wavelength, or packet (bit-stream) layer. This classifies open access as fiber, wavelength or bit-stream open access. Fiber and wavelength open access require new architectures. We identified two interfaces at which the networks can be opened – RN and OLT. We also introduce many points of unbundling (PoUs), which can be defined as the first point at which different (at least two) network providers (NPs) or service providers (SPs) are brought together on the same device (e.g. fiber cable, power splitter, wavelength router, Ethernet switch). All these solutions have their own design tradeoffs, and there is no clear one-shoe-fits-all solution. The selection requires an in-depth analysis of the impact of the design tradeoffs, which we translate into a network cost. We then compare the proposed architectures with regard to their cost (relevant capital and operational expenditure) and analyze the impact of adoption levels (percentage of users subscribed) and customer churn rate (how often the customers change network provider) on the cost of the architectures.

In **Chapter 8,** we investigate the optimal degree of network flexibility that is required for resource allocation. The network can be designed with either full flexibility (every user gets all available wavelengths at all time) or partial flexibility (a user gets some wavelengths). A higher flexibility can minimize the number of wavelengths used at the OLT, leading to energy efficiency, but it comes at various penalties: security, insertion loss, etc. First, from exhaustive simulations, we conclude that a partially flexible network can already provide enough gains compared to a fully flexible network, and a fully flexible architecture is never really needed. Based on this insight, we propose a new architectural flavor of TWDM-PON that uses a cascaded configuration of wavelength selective switches (WSSs) and arrayed waveguide gratings (AWGs)[10], which is called wavelength switched TWDM-PON. WSSs add flexibility to resource allocation while AWGs increase the network fan out

[10] An AWG is commonly used for (de)multiplexing optical wavelengths in WDM systems.

without adding insertion loss significantly. In addition, we compare wavelength switched TWDM-PON with the other TWDM-PON variants and find that wavelength switched TWDM-PON accrues the flexibility advantages without adding significant cost, power consumption and insertion loss. Finally, we also propose an energy saving scheme for wavelength switched TWDM-PON that has the potential of saving up to 60% energy at the OLT.

Chapter 9 provides conclusions and future research directions.

This work has also been complemented with three appendices. In **Appendix A**, the work presented in Chapter 5 about the evaluation of ONU power saving modes for the NGOA architectures has been extended to include the power saving potential at both the OLT and the ONU. In **Appendix B**, we present an energy saving DBA algorithm for TWDM-PON. This work combines the work done in Chapter 4 with the idea of switching off unused wavelengths presented in Chapter 8. In **Appendix C**, we present a novel algorithm to tackle the performance degradation in TWDM-PON due to excessive wavelength switching, which largely increases additional overheads due to tuning time.

1
Introduction

If a man writes a better book, preaches a better sermon, or makes a better mouse-trap than his neighbor, the world will make a beaten path to his door

−RALPH WALDO EMERSON

When Tim Berner-Lee and Robert Cailliau invented the World Wide Web in 1991, nobody realized that the Internet and its applications would pierce human life as it has now. Today, the World Wide Web has really started to look like, well, a world wide web. A plethora of applications − Facebook, WhatsApp, and Skype − have already occupied human time and space, and still innumerable applications are there on the verge to thrust a colossal amount of data into today's network. Clearly, the networks should be enhanced continually to keep pace with this enormous bandwidth increase.

Currently, the main bandwidth bottleneck lies in the "last mile" of a telecommunications network that runs from a service provider's facility to a home or business. This part of the telecommunications network is also referred to as an access network. The first step to solve this bandwidth gridlock in access networks is to use optical technologies as a transmission medium. An optical fiber, being an excellent communication medium that can supply a high bandwidth in the order of Tb/s, is ideally suited for the high-bandwidth

capacities. Therefore, the trend of the evolution is toward fiber to the home (FTTH) based access networks, in which an optical fiber directly reaches a customer's home. These FTTH networks should be further enhanced to satisfy continual bandwidth increase. This evolution requires new architectures and dynamic bandwidth allocation (DBA) algorithms.

The focus of this dissertation is on the design of architectures and DBA algorithms for next-generation optical access (NGOA) networks. This merges the knowledge of both architectural designs and DBA algorithms. This chapter provides a detailed overview and introduction to both.

The architectural background, which comes first, gives an overview of fixed access networks (section 1.1), optical access network architectures (section 1.2), and the evolution strategies for NGOA networks (section 1.3). Then, we introduce DBA algorithms (section 1.4). Thereafter, we present an overview of this book (section 1.5), and finally, we list all publications obtained during this PhD research (section 1.6).

1.1 Fixed access network

A telecommunications network can typically be split into four segments: the core network, aggregation network, access network, and local area network (LAN), cf. Figure 1.1. The separate network segments can readily be distinguished by their important differences in traffic, equipment, technologies and operations. A core network, or backbone network, is the central part of a telecommunications network that provides various services to customers. Aggregation networks − also sometimes referred to as metro networks − aggregate the traffic from several access segments and feed the traffic into the core network. At the interface between the core and the aggregation network lies an edge node, which denotes the position of broadband remote access server (BRAS), at which different Internet service providers (ISPs) are connected.

In this dissertation, we focus on access networks, which lie between the aggregation and LAN network. As we already mentioned, access networks pose the main bottleneck in providing a fat bandwidth pipe between services and users. This bottleneck is mainly because of the prime objective of keeping access networks cost effective, which has forced the operators to use their legacy equipment as much as possible, resulting in the continual use of the oldest and the most common transmission medium, which is twisted copper pair [1]. Nevertheless, as the required data-rates have been increasing, the need to upgrade the capacity of the networks has become imperative. The capacity upgrade makes the change in the transmission media inevitable, and thus the networks have evolved by combining a change in the transmission media with a change in the overlaying technology.

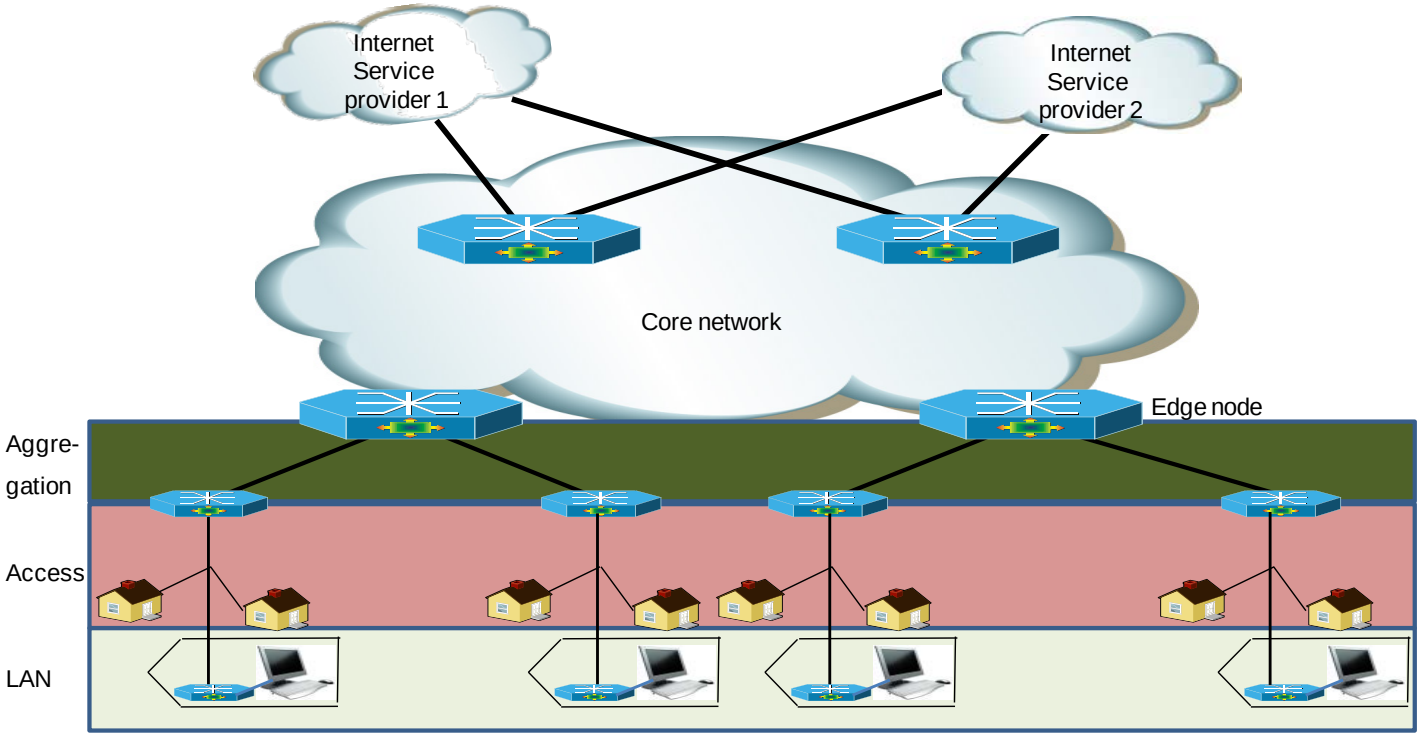

Figure 1.1: High-level overview of a telecommunications network

We will first see in section 1.1.1 as how the increased bandwidth and data-rates requirements oblige a change in the transmission media. Different options of transmission media will then be discussed in section 1.1.2. Finally, we will cover the evolution of the networks in section 1.1.3.

1.1.1 Bandwidth and data-rates requirements

Communication networks have evolved from being a primary source of speech to becoming a network used for transmitting many other sources of information like music, pictures, and computer data. The applications − the source of information − have been requiring increasing data-rates. Looking to the future, these data-rates are expected to increase at an exponential rate similar to Moore's Law (i.e. Nielsen's Law[11]). Today's high-definition television (HDTV) requires bit rates between 8 and 15 Mb/s, even with new compression technology of the Moving Pictures Experts Group' MPEG4. 3D immersive HDTV – a technology already being used in some academic and industrial settings – will require 100 to 300 Mb/s, whereas future evolution like 8k ultra-HDTV (UHDTV) is expected to consume about 160 Mb/s per channel [2]. Furthermore, 3D versions of UHDTV, combined with time-shifted unicast or even peer-to-peer applications, will fill bandwidths up to the 400 Mb/s range. Assuming two parallel independent downstream or download sessions, the respective (downstream) UHDTV bandwidth will need to be at least 800 Mb/s.

Increased data-rates impel an increase in the bandwidth capacities of the transmission media by the similar orders of magnitude. Using Shannon-Hartley's equation [3], we can formulate the relation between data-rates and the required channel capacities as:

$$C = B\log_2(1+\mathrm{SNR})\ \text{bit/s}$$

Here C is the rate of information transmission per channel, B is the channel bandwidth, and SNR denotes Signal to Noise ratio.

From Shannon-Hartley's equation, it is clear that the increased data-rates entail a transmission medium with higher capacities. This push toward higher channel capacities has been one of the main drivers behind the technology evolution in access networks.

1.1.2 Physical media

There are three important guided transmission media (Figure 1.2): twisted pair

[11] Nielsen's law states that the user's connection speed grows by 50 percent per year, or doubles every 21 months.

(used to connect a home to the telephone network), coaxial cable (used to connect a home with the TV-distribution network, e.g., Cable TV) and optical fiber (as of today, used mainly to interconnect large telephone exchanges and ISP routers). Note that an example of an unguided transmission medium is the air, which is used for wireless access (out of the scope of this dissertation).

- A **twisted pair** consists of two insulated copper wires that are twisted together. When the wires are twisted, the waves from different twists cancel out, so the wires radiate less effectively, and it becomes less sensitive to external noise sources. This helps it to span longer transmission distances.
- A **coaxial cable** consists of a copper wire as the core, surrounded by an insulating material. The insulator is encased with a conducting copper shield. Many coaxial cables also have an insulating outer sheath or jacket. Compared to a twisted pair, a coaxial cable has a better shielding against external noise sources, and can thus span longer distances at higher speeds.
- An **optical fiber** consists of a glass core surrounded by a transparent cladding material with a lower index of refraction. It also includes a plastic jacket for the protection of the fiber. The light is guided in the fiber by the principle of total internal reflection[12].

The main deterministic property of these transmission media is their bandwidth. Note that the bandwidth of a channel is the range of the frequencies that it can transmit with reasonable fidelity. Figure 1.3 depicts attenuation[13] or transmission loss at various frequencies in different transmission media. From this, the typical bandwidth of these media can be concluded as in Table 1.A.

1.1.3 Evolution of fixed access networks

One of the oldest examples of communication networks is a telephone network [1]. Telephone networks were mainly used to transmit narrowband voice channels and used twisted pair. Twisted pair was an excellent communication medium for low bandwidth signals. However, because of the emergence of the Internet and the World Wide Web and its several applications like video applications, the need arose to optimize these networks for data communication. This led to digital subscriber loop (DSL) networks [4], which removed the filter used by telecommunications operators to restrict the bandwidth of the local loop to approximately 4 KHz, thus making the entire

[12] Total internal reflection is a phenomenon when the light cannot pass through a medium and is entirely reflected. It happens when a propagating light strikes a medium boundary at an angle larger than a critical angle, and the refractive index is lower on the other side of the boundary.

[13] Attenuation is the reduction in intensity of the light beam (or signal) with respect to distance travelled through a transmission medium.

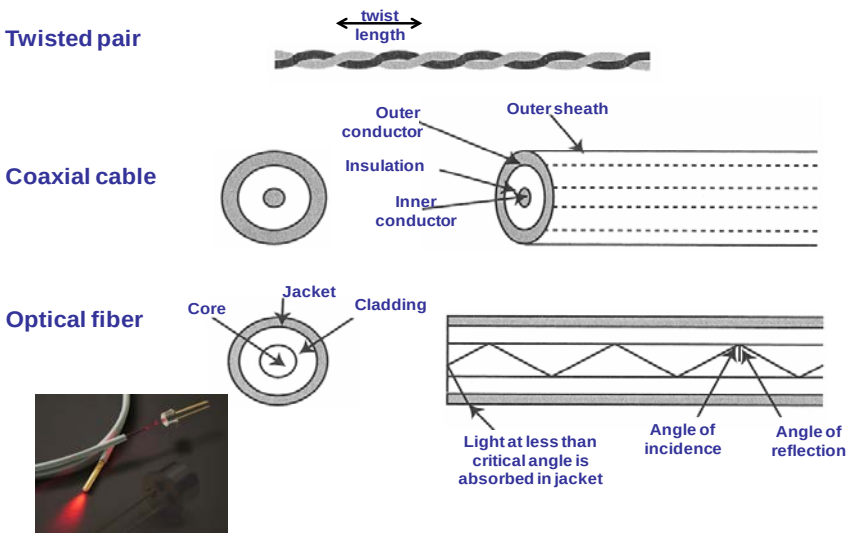

Figure 1.2: Examples of physical transmission media

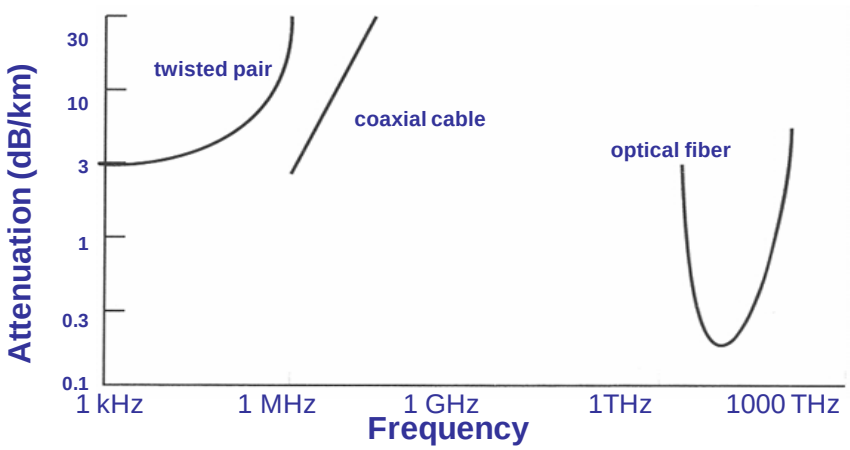

Figure 1.3: Attenuation as a function of frequency for different transmission media

Table 1.A Transmission media and their typical bandwidths

Transmission Media	Bandwidth
Twisted pair	10 MHz
Coaxial cable	1 GHz
Optical fiber	10 THz

capacity of the local loop available to the users. The limiting factor then becomes the physics of the local loop, which depends on several factors, including its length, thickness, and general quality.

The first broadband DSL standard was the integrated services digital network (ISDN) system [5]. Later on, various flavors of DSL technologies (collectively called xDSL) have been invented for broadband data delivery on twisted copper pairs. Asymmetric DSL (ADSL) and very high data rate DSL (VDSL) are the two most common DSL technologies. ADSL provides a downstream data rate of up to 8 Mb/s and upstream data rate up to 800 Kb/s, over a maximum transmission distance of 5.5 km [5].

There is a marked relationship between distance and available bandwidth, when we are using copper. The data rate can be increased by limiting the length of the copper loop. Thus, newer DSL technologies like VDSL are usually supported with a fiber deep infrastructure – in which the fiber is extended deeper (or closer to the users) into the network such as fiber-to-the-curb (FTTC) − which has a short distance of twisted copper loop. In the 4G broadband project [6], it was shown that for a copper loop distance of up to 200 m, VDSL could achieve a data-rate of 1 Gb/s with the use of vectoring, etc.

Figure 1.4 depicts this evolution trend where the digital subscriber line access multiplexer[14] (DSLAM) at the central office (CO) moves toward the users to minimize the length of the copper loop, thereby supplying higher data rates. This also leads to a variety of fiber to the X (FTTX) networks [7]-[8], where X can mean curb, building, and home, etc. Note that FTTX networks use an optical line terminal (OLT) at the CO and an optical network unit (ONU) at the user's premises. Finally, we present a timeline of when different DSL technologies were adopted in Europe, Figure 1.5. It should be of no surprise that the adoption of technologies matched with the Nielsen's law of bandwidth evolution.

Another technology that has also been used is hybrid fiber coax (HFC). HFC networks use a coaxial cable network. Traditionally, coaxial cable has been used for transmitting one-way broadcasting systems, like Cable TV. Later on because of the excellent bandwidth of coaxial cable compared to twisted pairs, they were also used for data communications. Unlike the rest of the world, where DSL services are more popular than cable modem, in the United States, cable modem became the dominating form of broadband access because of far more complete coaxial plant coverage than in other countries[15].

---

[14] A DSLAM is a network device, often located in telephone exchanges, that connects multiple customer DSL interfaces to a high-speed digital communications channel using multiplexing techniques.

[15] The exceptions to this general trend exist. For example, Belgium has a cable penetration of almost 100%, yet DSL is more dominant. However, in Flanders – with cable operator Telenet – HFC is the dominant broadband technology. Therefore, there are many regional differences.

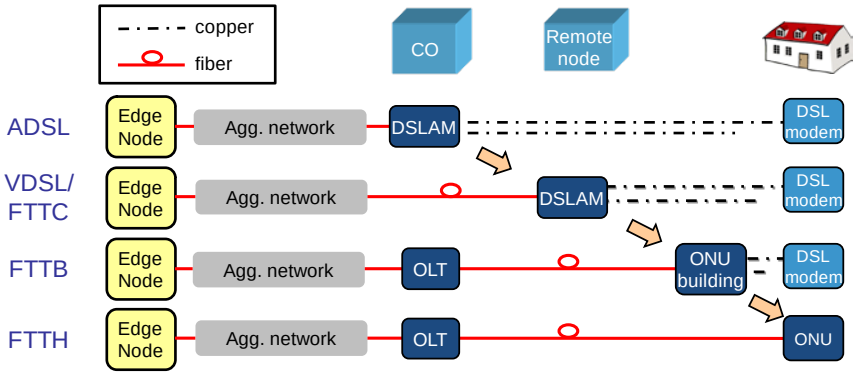

Figure 1.4: ADSL to FTTH evolution[16]

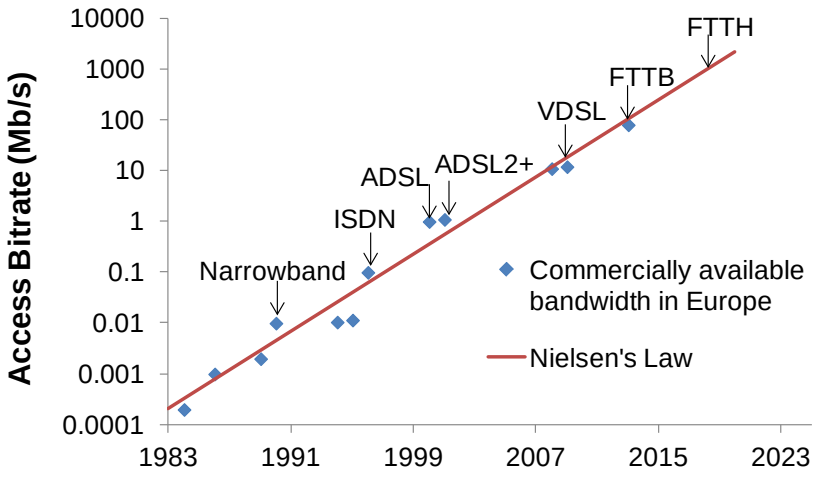

Figure 1.5: Access bit rate evolution of different DSL technologies [source: IEEE spectrum]

1.2 Optical access network architectures

The potential of optical fiber to deliver high bandwidth has been well established for many years; however, the recent surge in bandwidth demand, driven by fast-growing video-on-demand (VOD) services and emerging applications − network gaming, peer-to-peer downloading − has revitalized the use of optical fiber for access networks. Currently, optical access networks have

[16] Agg. network denotes aggregation network.

been widely deployed in Asia, North America and Europe. Nevertheless, the first generation of optical access networks has already reached their bandwidth saturation, which has impelled innovations in this technology and subsequently the next generations of optical access networks have been developed. Moreover, ever-increasing bandwidth requirements, coupled with the innovations in physical systems, will continue to propel the innovations of optical access networks. In this section, we provide a brief discussion of optical communication line. Thereafter, we discuss optical access network architectures.

1.2.1 Optical communication link

A simple schematic of an optical communication link is presented in Figure 1.6. An optical communication link is composed of an electrical-to-optical converter, a transmission medium, and an optical-to-electrical converter.

Laser diodes are used as an electrical-to-optical converter. They are thus used as transmitters of an optical signal. A typical example of a laser diode is distributed feedback (DFB). These diodes are either directly modulated or externally modulated, depending upon the desired data rate. Usually, external modulation is used for higher (10 Gb/s or more) data rates.

An optical fiber is used as the transmission medium. When light propagates through the optical fiber, it loses its strength and broadens in time. The first effect is called as attenuation, and the second as dispersion. Attenuation is measured in dB/km. Because of attenuation, the optical fiber has a limited length. This length decides the reach or span of the optical system. On the other hand, dispersion limits the data rate that can be transported over a fiber. It is measured in ps/km-nm. As the dispersion is a key criterion, typically single mode fibers (SMF) are used in access networks.

Photo-diodes are used as an optical-to-electrical converter. They are thus used as receivers of an optical signal. Typically, two kinds of photo-diode are used: positive-intrinsic-negative (PIN) photodiode and avalanche photo-diode (APD). These photo-diodes differ in their receiver sensitivity[17] and cost. APD has better receiver sensitivity but a higher cost.

The important characteristic of the optical communication link is the power budget. The power budget is the allocation of available power (launched into a given link by a given source) among various losses in order to ensure that adequate signal strength (power) is available at the receiver. For example, if the optical communication system has the following parameters: laser transmitting

[17] It is the minimum magnitude of input signal required to produce an output signal having a specified signal-to-noise ratio.

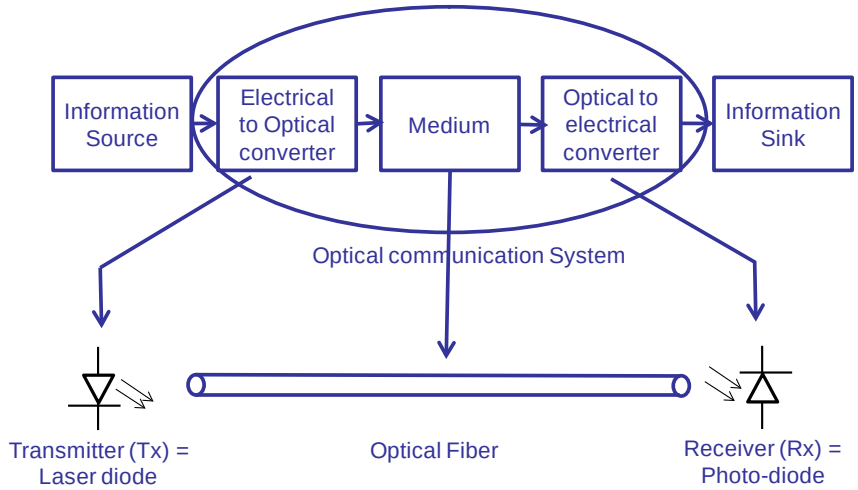

Figure 1.6: Optical communication link

power of 6 dBm[18], receiver sensitivity of -30 dBm, losses of 20 dB, then the power budget is 16 dB (6 dBm-(-30 dBm)-20 dB). Based on this power budget, the reach of the system can be calculated as $\frac{Power\ \ Budget}{Fiber\ Loss}$. Fiber losses depend upon the used wavelengths.

The losses in the link can be computed based on the insertion loss of the components. Insertion loss is the loss of signal power resulting from the insertion of a device in a transmission line and is usually expressed in dB. The insertion loss should also account for splice losses (losses at the fiber joints, typically 0.1 dB), connector losses (losses due to connectors, typically 0.5 dB), and end-of-life losses (losses due to the use of components over time).

We now discuss other frequently used optical components.

1.2.1.a Other frequently used optical components

Power splitter

A power splitter is a passive component, which splits an incoming signal (independent of a wavelength) into multiple signals with reduced power. The power of the output signal depends upon the splitting ratio. Typically, a split of $1{:}2^N$ reduces the output power by a factor of 2^N. This power loss is usually expressed in dB. As $10 \log_{10} 2 = 3$ dB, a power loss of 3 dB can be accounted for every 1:2 split. For example, a power splitter of 1:32 fan out will impose an

[18] dBm (sometimes dBmW or Decibel-milliwatts) is an abbreviation for the power ratio in decibels (dB) of the measured power referenced to one milliwatt (mW).

insertion loss of $\log_2 32 \times 3$ dB.

A power splitter is a very simple and an inexpensive component. It however imposes serious insertion loss, which is its main drawback. Another disadvantage of a power splitter stems from its broadcasting nature, which makes the content of a user available to all users. This may raise security concerns, which require good encryption, especially for business users.

Arrayed waveguide grating

Arrayed waveguide gratings (AWG) are commonly used as optical wavelength (de)multiplexers in wavelength division multiplexed (WDM) systems. These devices are capable of multiplexing a large number of wavelengths into a single optical fiber, thereby increasing the transmission capacity of optical networks considerably. It is a static device, meaning that the wavelengths are distributed in a fixed manner.

A useful property of an AWG is its low insertion loss, typically between 3 to 4 dB, which is almost independent of its fan out. This property can be used to create PON systems with large fan-outs, yet with a small insertion loss penalty.

Wavelength selective switch

Wavelength selective switches (WSSs) are reconfigurable wavelength routers. They can steer wavelengths in a dynamic way to the output port. At the same time, they support selective multi-casting, i.e., some wavelengths can even be fed to multiple output port at the same time. WSSs are active switches, and thus they need power for their operation. Moreover, due to their added functionalities, they also come at a higher cost. Their insertion loss is typically in between that of an AWG and a power splitter.

1.2.2 Optical access network architectures

In a typical optical access network architecture, an ONU at a subscriber's end is connected to an OLT at the CO, through an optical distribution network (ODN) composed of different fiber segments and remote nodes (RNs), cf. Figure 1.7. In the uplink (toward core) direction, an OLT is connected to an aggregation network. Real architectural implementations could include several stages of RNs, allowing the topology to be scalable with the number of connected users. As an example, we consider two splitting stages of RNs.

Optical access networks can use different multipoint topologies. The most common architecture is based on a tree topology, with the OLT as the root of the tree and the ONUs as the leaves. The first RN (RN1) in an optical access network is connected to the OLT via a feeder fiber (FF). Through the distribution fiber (DF), each output port of RN1 goes to a second RN (RN2). Each output port of the RN2 is then connected to one ONU by the last mile fiber (LMF).

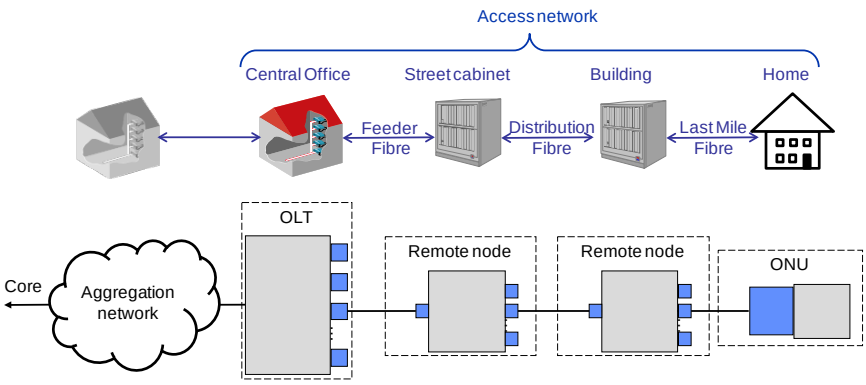

Figure 1.7: Optical access network

There are three main categories of FTTH networks (Figure 1.8), home run, active and passive [9]. The simplest FTTH architecture is home run or point-to-point (P2P) fiber architecture, which offers a dedicated fiber from the CO to each user. In case of an active optical network (AON), a switch or router is installed between the CO and the user, and from this point, a dedicated fiber reaches each user. On the other hand, passive optical networks (PONs) use passive splitters/combiners instead of the active switch. Both AONs and PONs are point-to-multipoint (P2MP) networks. We will now discuss these architectures in more detail.

1.2.2.a Point to point architectures

P2P architectures provide individual fibers between the CO and each user. This architecture thus requires many fibers, shooting up its first installation cost. Many fiber terminals (as many as homes) also increase the required floor space at the CO. Conversely, this architecture offers high capacity and a high flexibility to upgrade each user individually.

P2P are mostly deployed in Europe, while Sweden in particular is completely dominated by P2P. Several tier 2 and 3 network operators in Europe also deploy P2P, e.g., in Denmark, Norway, the Netherlands, and Austria. Hong Kong also deploys a very large P2P, and there are deployments in the Middle East and North America as well, but worldwide PON architectures are the dominant technology of choice amongst deployed FTTH schemes. Currently, about 70-80% deployment is of PON, out of which Gigabit PON (GPON) is the dominant technology [8].

1.2.2.b Active optical networks

Current AONs use an active switch at the RN. The active switch may be pure open systems interconnection (OSI) layer 2, or layer 2 with some layer 3 features

(e.g., ICMP snooping), or a layer 3 device (i.e., IP routers). Because of different technical backgrounds, different practical and geographical constraints, AON networks differ from each other. In an active star deployment, a single fiber is connected from an aggregation switch at the CO to an active switch at the RN, from where individual fibers run to each ONU. Compared to P2P architecture, it reduces the number of fibers. However, the active switch needs powering and maintenance. It also needs to survive a wider range of temperatures than in-door equipment.

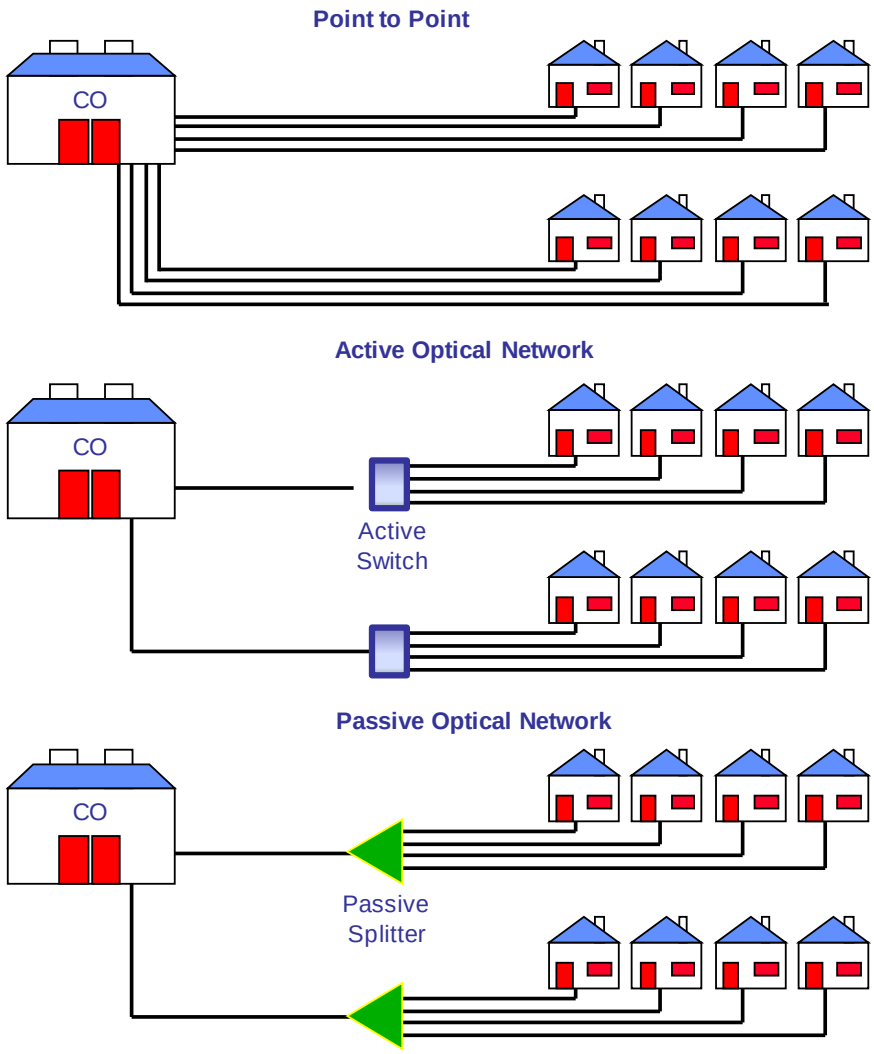

Figure 1.8: FTTH architectures

A typical advantage of an AON technology is that the ONUs can talk amongst each other. This provides great opportunities for maintaining locality of traffic meaning that the local traffic remains local. Another advantage is the ease of service provisioning by utilizing Virtual-LANs and/or per service IP address spaces. Virtual-LANs are a means to create logical topologies on top of the actual network topology; for example, a logical topology can be created that includes only the customers that subscribe to a particular service such as IPTV.

1.2.2.c Passive optical networks

PONs use passive components at the RN. The passive components do not require any electrical powering, have a high reliability, and are typically easy to handle. The most common passive component that is used by the currently deployed PONs is a power splitter. In the downstream direction, the power splitter broadcasts content to all users, and the users select their respective content. Thus, the power splitter based architectures are also referred to as broadcast and select. The most common examples of broadcast and select architectures are Ethernet PON (EPON) [10] and Gigabit PON (GPON) [11]. They use two wavelengths, one for the downstream (OLT to ONUs) and the other for the upstream (ONUs to OLT) direction. In the upstream direction, a mechanism is required to avoid the collision between the data of different users. A commonly used mechanism is time division multiple access (TDMA). We will discuss these mechanisms in more detail in section 1.4. When TDMA is used in the upstream direction, the power splitter based PONs are also referred to as TDMA-PONs.

The evolution of PONs aims at increasing the capacity of the PONs, which can be done by increasing the line rate (the rate in b/s at which the optical communication line accepts bits) of the PONs or by using multiple wavelengths per PON, or by combining both approaches. Up to now, many generations of PON systems have been developed. The first generation[19] of PON consists of EPON and GPON. From an architectural perspective, EPON (offers up to 1 Gb/s in downstream direction) and GPON (offers up to 2.5 Gb/s in the downstream direction) use a power splitter at the RN and use a TDMA based medium access control (MAC) protocol.

Further evolution of PON, referred to as next generation PON1 (NG-PON1), supports coexistence with GPON/EPON on the same ODN. The coexistence enables seamless upgrade of individual customers to NG-PON on a live ODN without disrupting services of other customers. XG-PON (successor of GPON) and 10G-EPON (successor of EPON) are the important examples of NG-PON1.

NG-PON2 may bring revolutionary change and may be disruptive with no

19 The first generation of PON also consists of variants like ATM based PON (APON) and Broadband PON (BPON). However, they are omitted, as they are obsolete today.

requirement in terms of coexistence with G-PON/EPON on the same ODN. The important examples of these technologies are WDM-PON and time and wavelength division multiplexed PON (TWDM-PON).

We now discuss some important PON technologies in more detail.

Higher line rate PONs

By increasing the line rates, the total capacity of the PONs can be increased [12]. Thus, higher line rate PONs like 10G-EPON (10.3 Gb/s downstream and 1.25 Gb/s upstream), XG-PON (10 Gb/s downstream and 2.5 Gb/s upstream), and XLG-PON[20] (40 Gb/s downstream and 10 Gb/s upstream), have been envisioned to increase the capacity of first generation of PONs like EPON and GPON.

Increased line rates require advanced transceivers, faster processing, and a higher resistivity to dispersion. These requirements impose significant cost and power consumption penalties at both the OLT and the ONUs. Note that as the ONU is not shared, the increase in the cost of the ONUs hurts operators most. Thus, architectures should be designed to keep the ONU as cost-effective as possible.

WDM-PON

WDM-PON increases the bandwidth of the PON by employing wavelength-division multiplexing (WDM) so that multiple wavelengths may be supported in either or both upstream and downstream directions. As an example, it uses multiple wavelengths and each user gets a different pair (for downstream and upstream) of wavelengths. The simplest solution is to use a colored transceiver at ONU, in which every ONU gets a transceiver of a different color (or wavelength) [13]. Consequently, the vendors have to stock an inventory of different colored transceivers. In addition, colored transceivers shrink the cost reduction that can be attained by mass production. Thus, colorless transceivers are preferred at the ONUs. There are many approaches for colorless transceivers [14]. One approach is to use a tunable transceiver, which use a tunable transmitter and a broadband receiver (so that it can scan a broader spectrum). The tunable transmitter is typically more expensive compared to a fixed one. In addition, as the receiver is broadband, it adds to the cost. Another disadvantage of WDM-PON is its inflexibility [15] in resource allocation. As each user gets one wavelength, there is no possibility of a flexible resource use: even if a user does not use its wavelength, it cannot be reconfigured to another user.

WDM-PON has also some advantages compared to TDMA-PON. WDM-PON avoids the complexity of a TDMA based bandwidth allocation. As each user gets a dedicated wavelength in WDM-PON, it is assured a high quality of service

[20] XLG-PON is the successor of XG-PON. Note that XL is the Roman notation of 40.

(QoS) without complexities and inefficiencies of TDMA. It also removes the need of burst mode transceivers, i.e., the transceivers that can change their transmission and reception levels in very short time-scales (ns). Note that, TDMA-PON requires a burst mode receiver at the OLT and a burst mode transmitter at the ONU. The burst mode at a receiver is used to adjust the receiver to the different levels of the received signals. In WDM-PON, as signals from only one user is received, there is no requirement of a burst mode receiver at the OLT. In addition, the burst mode at the transmitter is only required for TDMA-PON − which requires a user should transmit only at its own time interval − so that it could enable a faster on/off of a transmitter.

WDM-PON does not need to use a power splitter because every user gets its own wavelength. A passive component that looks quite promising for WDM-PON is an AWG. An AWG splits the content according to the input wavelengths and typically feeds one wavelength per output port. If there is one user per output port of an AWG, every user receives its dedicated wavelength. The main advantage of an AWG is its low (3 to 4 dB) and fan-out independent insertion loss. In addition, the architecture becomes quite secure as every user gets only its wavelength. The main disadvantage of an AWG, however, is that it needs to replace already deployed power splitters, hindering migration, which is a key criterion in the choice of a new technology for the network operators. The alternative is to use WDM-PON over a power splitter. The question here is what is preferred more, the advantages of an AWG or an easy migration enabled by a power splitter.

A typical example of WDM-PON is shown in Figure 1.9. We assume 32 wavelengths, and each transmitter (Tx) and receiver (Rx) at 1 Gb/s. We assume an AWG at the RN, which (de)multiplex (MUX/DEMUX) these wavelengths. For this configuration, the transmitter is assumed tunable, so that it can transmit on any one of the 32 wavelengths, and the receiver is assumed broadband to receive any one of the 32 wavelengths. For simplicity, we only show downstream channels. Further, the upstream and downstream wavelengths can be assumed in different wavelength bands.

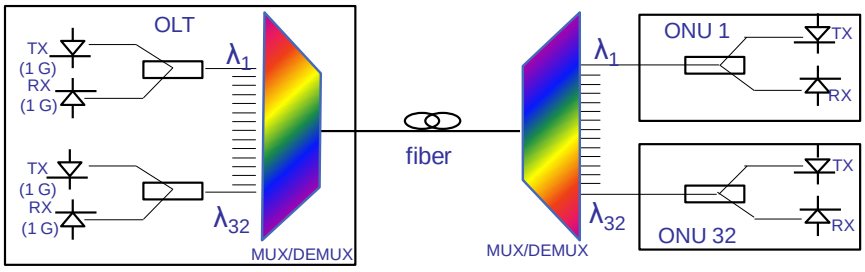

Figure 1.9: WDM-PON architecture

TWDM-PONs

TWDM-PONs [16] combine both approaches of using higher line rates and of using WDM to increase the scalability of the PONs. WDM is used to increase the overall capacity and each wavelength at a higher line rate is shared among multiple users using TDMA. The ONU needs a tunable transmitter and a broadband receiver; the frequency range of a broadband receiver is typically narrower than in the case of WDM-PON as it uses a fewer wavelengths. The ONU also needs a tunable filter (TF), as multiple wavelengths are available at its input.

TWDM-PONs can use a combination of an AWG and a power splitter at the RN or just a pure power splitter. More advanced system concepts, e.g., with a WSS [17]-[22] at the RN, have also been envisioned for TWDM-PON. It will also be shown that TWDM-PON can use such complex systems due to its high sharing granularity without affecting the overall cost per user significantly.

A typical configuration of TWDM-PON has been shown in Figure 1.10. We assume four wavelengths at the OLT with an upstream line rate of 2.5 Gb/s and a downstream line rate of 10 Gb/s, and a split of 1:512. Further, we assume a power splitter at the RN.

Other advanced PONs

Orthogonal frequency division multiplexed PON (OFDM-PON), ultra-dense WDM-PON (U-DWDM-PON) and optical code division multiplexing PON (OCDM-PON) have also been widely considered in research.

OFDM-PON uses OFDM modulation to increase the robustness of data transmission on the physical layer. The OLT sends the OFDM broadcast data at the aggregate bit rate, e.g., 10 or 40 Gb/s, to a passive power splitter from where the data is transmitted to each ONU. The ONU receives the whole 10 or 40 Gb/s data stream and selects its part of the data. This can be done by choosing specific subcarriers (frequency slots) since OFDM allows access to the subcarrier level. It is also possible to mix OFDM with the time domain, such that the ONU receives

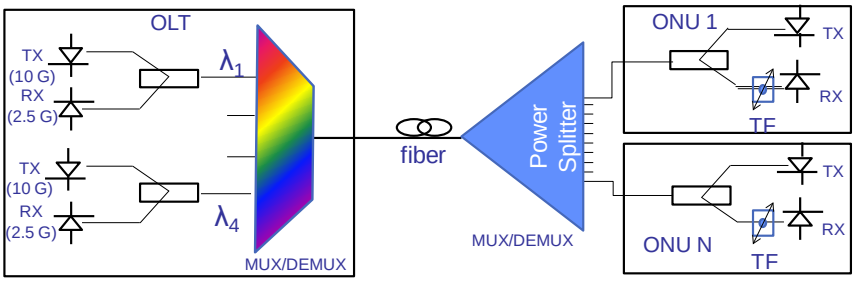

Figure 1.10 TWDM-PON architecture

specific subcarriers at specific time slots. Compared to TDMA-PON, OFDM-PON has a better tolerance with respect to transmission impairments, and therefore possesses the potential to achieve higher reaches, particularly at 40G or more. An OFDM-PON for ultra-high capacity converged wireline-wireless access networks was studied in the framework of the European FP7-project ACCORDANCE [23].

Another attractive trend for PONs is **U-DWDM-PON**, in which the frequency spacing between different channels is reduced to 12.5 GHz[21] or even lower. An advantage of such narrow spaced channels is that a large number of channels can be obtained in the same frequency spacing. This increases the capacity of the PON. The detection of ultra dense channels, however, requires coherent lasers, and optical heterodyne or homodyne reception [24]. Coherent detection increases the power budget due to the improved receiver sensitivity; however, it adds cost and power consumption due to the complex receiver designs.

OCDM-PON uses orthogonal codes, in a similar fashion as is done in the wide-band code-division multiple access (WCDMA) technology widely used in mobile communications (e.g., in 3G systems), to address capacity upgrade in PONs.

OCDMA can be used for dynamic bandwidth allocation (DBA) in PONs. Orthogonal coding (OC) techniques hold great promise for enabling enhanced real-time DBA algorithms in PONs. However, the design of OC when the number of users grows is an open issue. Currently, coders/decoders are in their early stages of development.

Table 1.B gives an overview of the important optical access technologies and their related standard.

1.3 Evolution strategies for next generation optical access networks

Optical access networks should be evolved to meet the ever-increasing bandwidth requirements. This evolution should optimize the network operator's investment and would depend on the innovations in the system concepts. For example, OFDM-PON requires heavy digital signal processing, which is currently costly and power consuming. With the innovations to follow, however, OFDM-PON may become a reality. Currently, the optimal NGOA solutions [25] are actively investigated, e.g., this was recently done in the European FP7-project OASE (optical access seamless evolution) – where a time frame of up to

[21] Note that WDM-PON can be distinguished into two types based on frequency spacing. Frequency spacing is more than 200 GHz for coarse WDM-PON and is lower than 200 GHz (typically 100/50 GHz) for dense WDM.

2020 was considered – and in the standardization forum FSAN (full service access network).

Table 1.B: Important optical access technologies and their related standards

Standard	Ethernet PtP	EPON	GPON	10G-EPON	XG-PON	TWDM-PON
Architecture	Point to Point	Point to Multi-point	Point to Multi-point	Point to Multi-point	Point to Multi-point	Point to Multi-point
Downstream data rate	100 Mb/s 1 Gb/s	1.25 Gb/s	1.25 Gb/s 2.5 Gb/s	10.3 Gb/s	10 Gb/s	40 Gb/s
Upstream data rate	100 Mb/s 1 Gb/s	1.25 Gb/s	155 Mb/s 1.25 Gb/s 2.5 Gb/s	1.25 Gb/s 10.3 Gb/s	2.5 Gb/s 10 Gb/s	10 Gb/s
Coverage (without amplifiers)	10 km	10-20 km	20 km	10-20 km	20 km	40 km
Split ratio	not applic.	1:16	1:32, 1:64, 1:128	1:16,1:32	1:32, 1:64, 1:128	1:256

1.3.1 Design requirements

The NGOA architectures should also support various other design characteristics: long reach, reliability, energy efficiency, and open access. The primary objective of any design feature is to minimize the total cost of ownership, and to make the network profitable for the operators.

1.3.1.a Long reach

Long reach is considered for a higher node consolidation, where a central access node (CAN) replaces many active COs. The reduction in active network sites minimizes the operational expenditures (OpEx) for an operator. It also minimizes the need of aggregation, reducing the number of aggregation switches and its associated capital expenditures. The evolution of the network toward longer reach is highlighted in Figure 1.11, where the OLT is moving toward the network core. The full advantages of a long reach can be tapped by combining it with a high fan out. A high customer fan out allows a higher sharing of fiber, components, and rack space of the OLT, thus minimizing the cost and power consumption of the network per user. The combination of a high fan out (>256) and a long reach (> 20 km) is a challenging requirement. If a power splitter is used at the RN, the fan out of the RN increases the insertion loss. This requires novel RN designs. Note that such designs can be more complex than a power splitter or an AWG because the complexity of the RN design does not significantly increase the cost per user due to a high sharing granularity. We

propose the design of such RNs in [14].

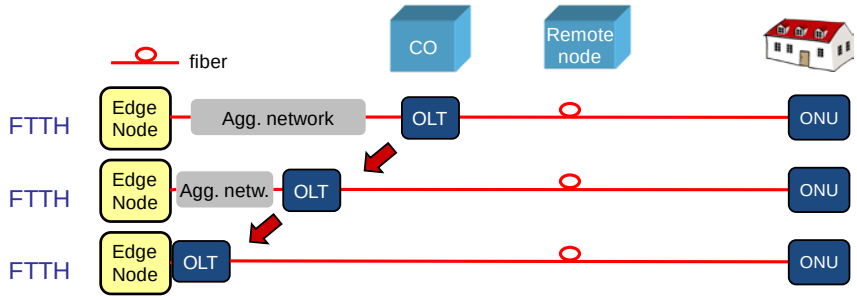

Figure 1.11: Evolution of fixed access networks

1.3.1.b Resilience

Resilience or network protection is a key requirement in the NG-PONs [26]-[29]. NG-PON faces more challenges in achieving a high reliability performance than the conventional PON as it has longer fiber lengths with a higher fiber cut probability, there are more customers on a single PON segment, and it includes components with a higher complexity (tunability etc) and thus with a poorer reliability performance.

The network operators have to pay a penalty for the service outage and thus unprotected architectures have a significant cost of penalty. Protection also involves duplicating facilities, which comes at a cost and thus the network protection should only be done when the extra cost in protection compensates for the penalties. Thus, a good strategy is to provide full protection only to business users who seek reliable services or otherwise impel a heavy penalty, but only a partial protection to residential users who prefer a low cost of service. Another driver of protected architectures is the fear of negative publicity (negative release on press, newspapers, TV) that can happen if a large network outage occurs. Thus, network operators are often more worried about a big failure disconnecting all clients for 1 hour at the same time than for multiple small failures throughout the year disconnecting every client for 1 hour on an average.

This confronts us with two major challenges. The first challenge is to design reliable architectures that provide end-to-end protection for business users and partial protection to residential users. When designing partially protected architectures, it is also vital to identify the most unreliable elements. The second challenge is to propose a new reliability metric that captures the fear of network operators about large failures.

In this dissertation, we propose four protection schemes that vary in the degree of protection for the business and residential user (chapter 6). We also introduce

a new parameter referred to as failure impact (FI). In the end, we analyze the protection schemes based on protection coverage, unavailability, FI and cost.

1.3.1.c Energy efficiency

An important criterion for the evaluation of NGOA networks is energy efficiency. Energy efficiency is important for minimizing the operational expenditures of network providers as well as for reducing environmental impacts by minimizing carbon emissions. In current FTTH-based telecommunication networks, the access segment (including customer premises equipment) consumes a major fraction (67%) of the energy, see Appendix A. Thus, significant energy savings can be procured by decreasing the energy consumption of access networks.

The ONUs consume the major portion (90%) of the energy consumed in optical access networks. Thus, several low power modes have been actively considered at the ONUs, e.g., sleep and doze modes [31]-[32]. Low power modes have the potential to save a significant amount of energy at the ONUs. In these modes, whenever there is no traffic to receive or send, non-essential functionalities are turned off at the ONU's end.

The energy consumption at the OLT could be reduced by using transceivers at a high utilization, leading to higher aggregation levels at the OLT and minimizing traffic burst. This can be accomplished in many ways. One approach is to use a high sharing at the RN. The second approach is to share a transceiver among many PON segments at the OLT. This does not enforce increasing split ratios in the RNs. The third approach can be applied to multi-wavelength PON systems, such as TWDM-PON, in which the number of transceivers used could be made dependent on the network load. All these approaches have significant potentials to reduce energy consumption. Note that the utility of these approaches is also linked to how flexible architectures are. The issue of flexibility is covered in section 1.3.1.e.

In this dissertation, we propose a novel algorithm for enabling sleep modes in EPON (chapter 4). There is a tradeoff between sleep efficiency and QoS, therefore a major challenge is to maximize the sleep efficiency while delivering required QoS to the users. We also investigate the effect of increased transceiver utilization on the energy consumption of the NGOA technologies (appendix A). Lastly, we investigate the sleep mode potential of TWDM-PON in appendix B.

1.3.1.d Open access

Open access refers to the sharing of a network infrastructure among different network entities in a non-discriminatory way [33]-[34]. Open access allows different network entities to participate over a common physical infrastructure. This has many advantages. First, each network entity does not have to make

huge investments in deploying fiber in the field, and thus has a lower barrier to enter in the market. This encourages competition and therefore supports new – open access related – business models to make FTTH networks an economically viable solution.

Open access ideally refers to the coexistence of network entities with distinct functionalities (Figure 1.12 model A):

- Physical infrastructure provider (PIP) − responsible for installation of the physical infrastructure (implying trenches, conduits, ducts, fiber, housing).
- Network provider (NP) − responsible for all active equipment between the users and the CO.
- Service provider (SP) – supply of services (telephony, IPTV, broadband Internet, mobile backhauling).

In reality, however, one entity can also act to provide two (or even three) functional roles. For example, an entity can act as both SP and NP e.g., (Figure 1.12 model B, E and F). This means that we can have multiple scenarios ranging from pure open access to incumbency consisting of a vertically integrated operator (Figure 1.12).

Open access can be offered at different layers (Figure 1.13) depending on how a user selects a specific network entity, e.g., by the selection of a fiber, wavelength, or a packet field (Ethernet address, VLAN tag, MPLS, IP). This classifies open access as fiber, wavelength, and bit-stream open access. Fiber and wavelength open access open PIP-NP interface, and bit-stream open access opens NP-SP interface. While bit-stream open access can be offered using logical layers, fiber and wavelength open access require new architectures. We design such architectures to support open access on fiber and wavelength layer, and evaluate their cost (chapter 7).

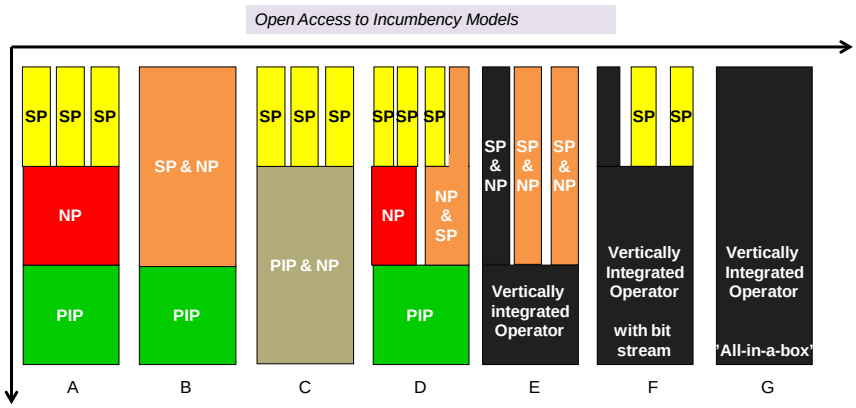

Figure 1.12: Different open access models

		Layer	Shared elements
PIP-NP	Fibre	1(Physical Layer Open Access)	Dark fibre leasing
PIP-NP	Wavelength		Optical Layer open access (CWDM or DWDM) in PONs
NP-SP	Bit stream	2 (Data Link Layer Open Access)	Dark fibre and link-layer electronics at each end. E.g., Ethernet-based VLAN.
NP-SP		3 (Network Layer Open Access)	Basic network service provided. E.g., IP Layer service over cable to support MPLS-based VPN.

Figure 1.13: Different open access layers

1.3.1.e Flexibility

The architecture may share the resources (i.e., wavelengths and time slots) in a static manner or may provision a more dynamic sharing of the network resources. The architectural capability by which all users dynamically share the network resources is referred to as flexibility [19]-[21]. In TDMA-PON, the network resource is one wavelength and all users dynamically share this wavelength. Thus, the TDMA-PON architecture is fully flexible. In TWDM-PON, the network resource is a set of wavelengths, and if all users have access to all wavelengths at all time instances, then the architecture is fully flexible, whereas if all users have access to just one wavelength, then the architecture is inflexible or static.

Flexibility increases the gains of statistical multiplexing, which increases system efficiency, leading to several performance improvements, like in the delay performance, congestion avoidance, etc. The other important advantages that can be accrued because of flexibility are network planning, migration, and energy efficiency. This is because the resources can be flexibly reconfigured according to the network load, user's demand, etc. For the same performance, a flexible architecture requires a lower capacity (which can translate to fewer transceivers) compared to a static architecture, especially at a light load. Thus, some of the capacity can be ideally switched off, minimizing energy consumption. An illustrative example is provided in Figure 1.14 to demonstrate this. The left part of Figure 1.14 shows that over time, users who require almost no services (e.g., business users during the nighttime hours) can be reconnected to a particular wavelength. In this scenario, the wavelength can be reallocated as shown in the right-hand part of Figure 1.14 and this provides a mean to turn off some of the OLT transceivers as well as line cards, to enhance energy savings at

the OLT over time. This might help the operator to build its network greener. The same scheme also depicts the possibility of dynamic allocation of wavelengths amongst users according to their traffic needs.

Even if the flexible architectures appear as the only way to go, there are challenges and problems associated with designing a flexible architecture (chapter 8). For example, a power splitter is a fully flexible component, but increases insertion loss and security concerns. Thus, there is a need to quantify the advantages and disadvantages of flexibility in order to design the architecture embedded with the optimal degree of flexibility.

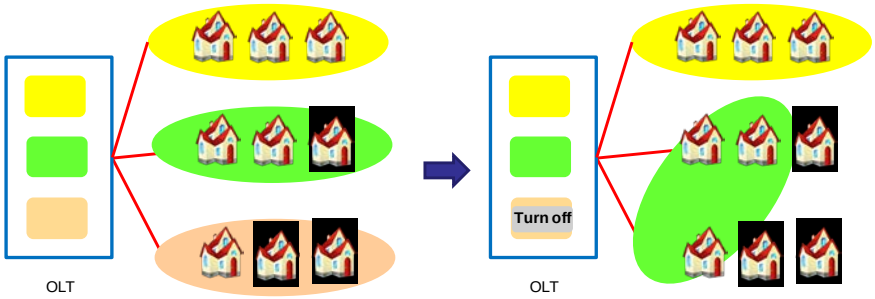

Figure 1.14: Illustration of an energy efficiency scenario for flexible TWDM-PONs

1.3.2 Evolution trend

Optical access networks are being evolved toward higher capacity, while maximizing the investment of network operators. The first generation of NGOA networks were EPON, GPON, and Ethernet PtP. EPON is widely deployed in Asia and North America, whereas GPON is deployed in Europe. Ethernet PtP is deployed in Sweden. Later on, these systems (especially EPON and GPON) were upgraded to higher line rate PONs like 10G-EPON and XG-PON. These generations of PONs are usually referred to as NG-PON. As the bandwidth requirement continues to grow, there are large research efforts to innovate technology for the future, in this regard, the FSAN standardization forum and the OASE (optical access seamless evolution) research project are important to mention. FSAN has recently chosen TWDM-PON as a primary candidate of NGPON-2 and WDM-PON as the secondary candidate of NGPON-2. WDM-PON was chosen for scenarios with high QoS requirements, as WDM-PON does not suffer from typical QoS performance issues of TDMA-PONs. The OASE project also advocated WDM- and TWDM-PON. The other PONs like 40G TDMA-PON, OFDM-PON, and UDWDM-PON will also be feasible in the future. The development of these technologies is purely linked to the development of their associated systems.

Figure 1.15 presents the timeline of optical access technologies as forecasted by the OASE project. The time denotes by when the technologies can be standardized.

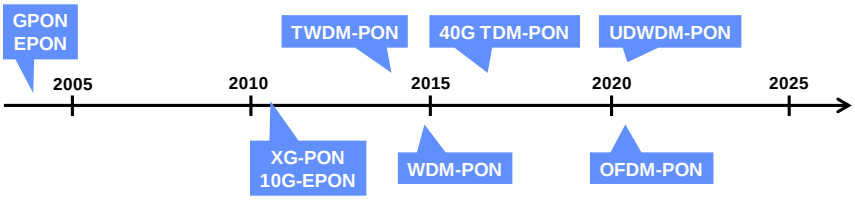

Figure 1.15: The timeline of optical access technologies [35]

1.4 Medium access control (MAC) protocols and dynamic bandwidth allocation (DBA) algorithms

The bandwidth allocation to users in an efficient and a fair way is an important challenge, especially in a logical point-to-multipoint system. Hence, MAC protocols are employed for facilitating the bandwidth distribution among users. MAC protocols specify the exchange of control messages between the OLT and the ONU, and DBA algorithms are built on top of it to distribute the bandwidth among users. MAC protocols are different for different technologies. Even TDMA-PONs, like EPON and GPON, have some important differences. For example, EPON does not allow the fragmentation of packets, whereas GPON does. This creates some important differences in the design of the MAC protocols, and consecutively, the DBA algorithms. We will further point out these differences in section 1.4.2.

WDM-PON gives a dedicated wavelength per user, and thus it poses a fewer challenges in the design of a MAC protocol. In WDM-PON, the MAC protocols can still be used for enabling sleep modes, so that the ONU does not need to be awake at all times for receiving packets.

TWDM-PON combines the bandwidth-scheduling problem of TDMA-PON with an additional dimension of wavelength allocation. The joint scheduling problems are generally much more complex than the separated time and wavelength allocation problems. On the other hand, OFDM-PON requires a MAC protocol for allocating sub-channels among users.

In CDMA-PON, multiple ONUs can transmit simultaneously using OCDMA. The number of ONUs that can transmit simultaneously, however, is limited due to the multiple access interference, and thus the transmission of some ONUs is delayed. A MAC protocol is required to minimize this performance degradation.

The challenges for other PON architectures can be derived from these basic

challenges. As much of the work in this dissertation is focused on EPON, we will describe the EPON based MAC protocol in more detail in section 1.4.1.

Together with the MAC protocols, suitable DBA algorithms are also required. An optimal design of DBA algorithms is needed to satisfy QoS bounds, to maintain energy efficiency, and to satisfy the service level agreements (SLAs) of different SPs in the case of multiple SPs per PON. We will discuss the challenges of a DBA algorithm in section 1.4.2. Like for MAC protocols, we focus only on the DBAs for TDMA-based PONs.

1.4.1 Medium access control protocol

In this section, we describe the MAC protocol employed for EPON. Conventional LAN mechanisms like carrier sense multiple access with collision detection (CSMA/CD) or CSMA with collision avoidance (CSMA/CA) are inefficient because the users will not be able to detect the collision that takes place after the power splitter and thus the OLT has to detect the collision and convey this information to the users. Nevertheless, because of the long propagation distances (typically up to 20 km) between the users and the OLT, these schemes will deteriorate the performance. Hence, a solution is to employ centralized TDMA based MAC protocols.

An EPON employs a multi-point control protocol (MPCP) to arbitrate the access to the shared medium in order to avoid data collisions in the upstream direction. The MPCP arbitration mechanism is developed by the IEEE 802.3ah Task Force. The MPCP provides mechanisms for auto-discovery, ranging, and registration for newly added ONUs, and a signaling infrastructure for coordinating data transmissions from the ONUs to the OLT. MPCP uses two types of control messages to facilitate bandwidth allocation: REPORT and GATE.

Each ONU holds Ethernet frames in its queue, and reports its queue depth using a REPORT message. A REPORT message can report the queue size of up to 13 queues. Upon receiving a REPORT message, the OLT uses a DBA algorithm to calculate the transmission slots of the ONU. Note that MPCP provides a framework for the implementation of different DBA algorithms, but does not specify any particular DBA algorithm.

After executing the DBA algorithm, the OLT transmits a GATE message to the ONU, which contains the allocated grant size of the ONU. Each GATE message can support up to four transmission grants. Each transmission grant contains the transmission start time and transmission length of the corresponding ONU. Each ONU updates its local clock using the timestamp contained in each received transmission grant, and maintains its synchronization. Each ONU then transmits its backlogged traffic according to the granted transmission slot and its REPORT message. Note that an ONU can append the REPORT message before

or after the data transmission.

These steps are also depicted in Figure 1.16 for a three ONU system, assuming that the ONU transmits its REPORT after data. The OLT first issues a GATE message, and then the ONU transmits the allocated bandwidth and REPORTs its new bandwidth arrival. After receiving the REPORT message, the OLT consequently updates its table, which is then supplied to a DBA algorithm to calculate the next grant for the ONU. Note that there is a guard time between two successive ONU's transmission.

EPON does not allow packet fragmentation, and thus some bandwidth may be wasted if the granted size is not what was requested. For example, if the ONU requests 600 bytes for two packets waiting in its queue of size 400 bytes and 200 bytes, but the OLT grants 500 bytes, then only the first packet will be transmitted. This means that 100 bytes will be wasted, as the packet of size 200 bytes cannot be fragmented. These unused time slots (e.g., 100 bytes in this case) are referred to as unused slot remainders (USRs). Some additional points to be mentioned are that the ONU does not necessarily have to reply to a GATE message. Thus if the ONU is in sleep, it may ignore any GATE message transmitted during its sleep period. MPCP however limits the maximum non-response time of an ONU to 50 ms. If the ONU does not response in this period, it is deregistered from the network. The time to register back in the network can be 10 s long.

1.4.2 Dynamic bandwidth allocation algorithms

The primary challenge in the design of DBA algorithms is to ensure a high QoS, Figure 1.17. QoS requires bounds on average/maximum delay, average/maximum delay variation, fairness, and high throughput [36]. These QoS bounds generally differ for different types of services, and thus different classes of traffic – high, medium, and low − should be considered. In general, it is more important to make sure stringent latency requirements are met for high-priority traffic (and then focusing more on worst case latency rather than the average latency), whilst for best effort traffic, focus could be put more on maximizing throughput than minimizing latency. Together with a high QoS delivery, several DBA algorithms have focused on energy efficiency.

We will first discuss DBA algorithms in the context of TDMA-based PONs, specifically EPON. In EPON, because of the broadcasting in the downstream direction, the downstream traffic can be transmitted on a first-come-first-serve basis. This approach, however, has a disadvantage. Because the ONUs do not know when their packets would arrive, they have to be awake at all times, and thus there is no opportunity for the ONUs to sleep. Thus, the DBA algorithms must transmit the downstream traffic in an energy efficient way. We will explore this problem in detail in Chapter 4.

ONU	Bytes	RTT
1	6000	120
2	3200	170
3	1800	200

ONU	Bytes	RTT
1	550	120
2	3200	170
3	1800	200

ONU	Bytes	RTT
1	550	120
2	570	170
3	1800	200

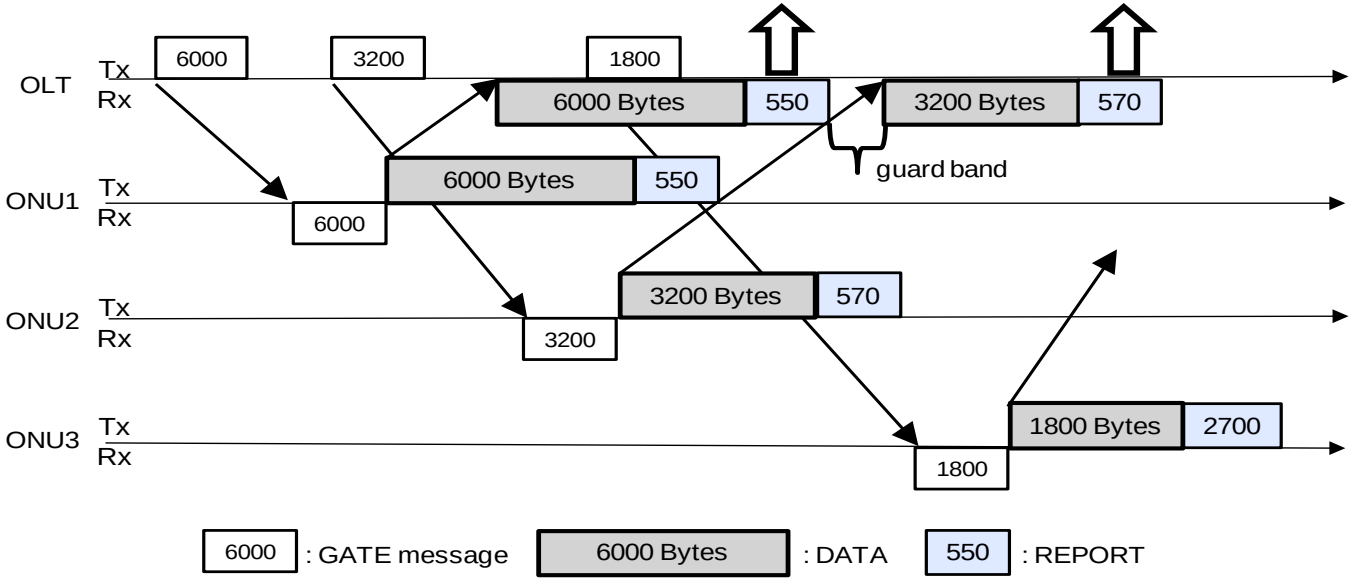

Figure 1.16: REPORT and GATE exchange in EPON

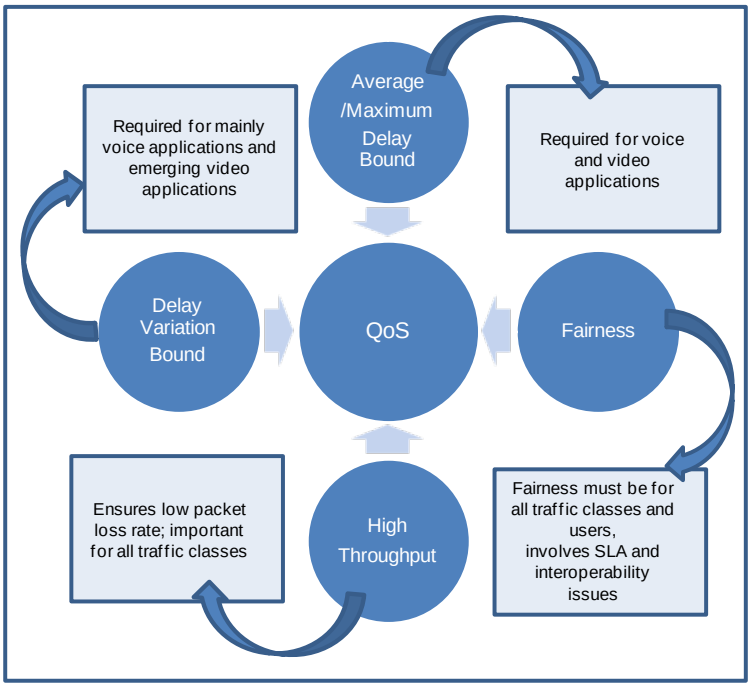

Figure 1.17: QoS requirements for DBA algorithms

On the other hand, for the upstream traffic, a fixed bandwidth allocation can be adopted in which the ONUs transmit in their fixed time slots. It, however, shows a very poor performance as the access traffic is highly bursty [37]-[38] and much of the bandwidth assigned to one ONU can be left unused. This scheme will thus degrade channel utilization and increase delay.

Thus, the DBA algorithms employ centralized polling mechanisms in which the OLT arbitrates the bandwidth allocation by polling the ONUs in a round robin manner. To increase the bandwidth efficiency in these protocols, the polling is interleaved, i.e., the next ONU is polled before the transmission from the previous one has arrived. An example of polling in EPON is the exchange of GATE and REPORT messages between the OLT and the ONUs. The OLT request the bandwidth demand by issuing a GATE message to the ONU, and the ONU reports the bandwidth (queue size) by transmitting back a REPORT message. Based on this information, the OLT determines bandwidth allocation for each ONU.

The simplest approach for the bandwidth allocation is referred to as gated scheme, which means that the OLT grants whatever an ONU requests. This approach, however, has serious security concerns. A malicious user can hog the entire bandwidth by requesting for very large grant sizes, influencing the

performance of other ONUs. Thus, this scheme is not fair, and does not assure any QoS. For example, a heavily loaded ONU can prevent another ONU from getting its fair share. Therefore, other schemes like limited are proposed in which an OLT grants up to some maximum transmission window. This assures that every ONU accesses bandwidth within a definite time. This is also very important for serving priority traffic. The priority traffic like voice is very sensitive to delay and thus it is required that the priority packets are transmitted within a definite time. The limited scheme assures that the cycle length − the maximum time interval within which every ONU is polled at least once − is limited, allowing priority traffic to be transmitted within a definite time. The cycle length should be chosen according to the delay bound of the priority traffic. For example, if the maximum delay tolerance of voice traffic is 2 ms, then the cycle length should be 2 ms.

In addition, note that the bandwidth is allocated by a centralized mechanism in which the OLT assigns bandwidth to every ONU. Thus, the bandwidth is allocated in rounds, where the length of each round depends on the round trip time (RTT) between the OLT and the ONU. This is of no consequence for the first generation PONs, in which the distance between the OLT and the ONU is up to a maximum of 20 km, and thus the RTT is limited up to 200 μs. Nevertheless, as the distances between the OLT and the ONUs are increasing, the RTT becomes a critical problem, and the DBA algorithms face new challenges. For example, when the distance between the OLT and the ONU is 100 km, the RTT is 1 ms, which is even more than the maximum allowed delay bound at the ONU interface for the voice traffic [36]. We focus on these problems in Chapter 2 and Chapter 3.

GPON has fewer challenges in the resource allocation than EPON. This is because the packets in GPON can be fragmented and thus there is no wastage corresponding to the USRs formation. On the other hand in EPON, the maximum USR of up to 1518 B (the maximum size of an Ethernet packet) can be formed. The percentage of USRs formed will be higher if the ONUs are issued smaller transmission slots, because even then a USR of 1518 B can be formed but over a smaller allocated bandwidth. Thus in EPON, the maximum transmission slot per ONU should be sufficiently long. This enlarges the maximum cycle length, and as the delay is proportional to the cycle lengths, the DBAs for EPON experience a higher delay compared to GPON's DBA.

In case of next generation PON technologies, there are new challenges. For example in TWDM-PON, the bandwidth scheduling is a two dimensional problem, in which in addition to the typical dimension of the time domain, a new problem dimension is "which wavelengths should be allocated to which ONU groups". When selecting the wavelength and the ONUs, many selection criteria can be adopted, like maintaining the same load on each wavelength, or allocating

the wavelength which has earliest finished transmission. Another interesting approach is to use the number of wavelengths according to the network load (chapter 8, and appendix B). This presents interesting avenues for minimizing energy as some transceivers can be switched off at a light load. Nevertheless, when the wavelengths are switched off, the load per remaining wavelengths increases, degrading the delay performance. Hence, there is a trade-off between the delay performance and energy efficiency. Even so, a typical delay analysis for the PONs shows that the delay on a wavelength does not increase significantly if the normalized[22] load does not increase beyond 0.7 [15]. Thus, the number of wavelengths can be chosen appropriately. For example, if the number of wavelengths is four and the load per wavelength is 0.2, then at least two wavelengths can be switched off, leading to a normalized load of 0.4 per remaining two wavelengths. Another challenge in this dynamic wavelength allocation is to confront with the penalties of tuning time (appendix C). When an ONU is switched from one wavelength to another, it introduces another overhead of tuning time. If this tuning time is long (in ms), a lot of bandwidth would be wasted if the ONUs hop onto another wavelength per cycle (about 2 ms). Thus, a long tuning time prohibits almost any wavelength switching. Conversely, if the tuning time is short (in ns), the wavelengths can be steered almost in every cycle.

1.5 Overview of this work

In this dissertation, we focus on the DBA and the architectural concepts for the NGOA networks. We present the detailed research overview in Figure 1.18. For each topic, we mark the number of the paper as given in the publication list (section 1.6). We also indicate the numbers of the chapters (Ch.x) and the appendixes (A.x) on the relevant publication.

For the DBA algorithms, we tackle the following issues: LR-PONs, QoS, and energy efficiency, with a focus on EPON and TWDM-PON. The concepts outlined for LR-PONs can be applied to any architecture with a logical connectivity similar to that of TDMA-PON. For the architectures, we tackle the following issues: resilience, open access, flexibility, energy efficiency, and long reach. The architectures proposed for resilience and open access are for NG-PON2. For flexibility, we propose advanced architectures that further extend energy efficiency and reach.

Chapter 2 deals with the analytical models for the DBA algorithms for long reach EPONs. The analytical models provide useful insights in developing the DBA algorithms, as it helps in pointing the specific inefficiencies of current algorithms. In this model, we consider many variants of the DBA algorithms:

[22] This is the load per channel capacity. For example, a load of 500 Mb/s on a 1 Gb/s wavelength, translates to a normalized load of 0.5.

gated, limited, multi-thread polling, etc. In addition, we consider two types of traffic: Poisson and Pareto.

Chapter 3 presents a novel algorithm for long reach PONs. Currently, the DBA algorithms perform depending on the reach of the PON solutions. We tackle this performance degradation by proposing synergized adaptive multi-gate polling with void filling (S-AMGAV) algorithm.

Chapter 4 presents an energy efficient DBA algorithm for EPONs. The algorithm explores the possibilities of sleep modes at the ONUs. The energy efficient mechanisms are explored for both legacy ONUs with large sleep overheads and next generation ONUs with small sleep overheads. A variety of grant sizing schemes are also investigated.

Chapter 5 evaluates the efficiency of ONU power saving modes in the NGOA architectures. Energy consumption of the ONUs is an important component, which is significantly reduced by power saving modes.

Chapter 6 proposes reliable architectures for NG-PON2 and evaluates the reliability and cost of these architectures. We also propose a new metric for reliability evaluation, called as the failure impact (FI).

Chapter 7 presents the open access architectures for NG-PON2. In this chapter, we propose architectures for fiber and wavelength open access. We also do an extensive qualitative and cost evaluation of these architectures.

Chapter 8 presents the advanced flexible architectures for lowering energy consumption as well as for providing long reach. The chapter presents two architectural flavors: a) flexible OLT architectures and b) flexible RN architectures.

Chapter 9 presents the main conclusions of this dissertation. It summarizes important messages and presents the future research directions.

We include three appendices in the book. In **Appendix A**, we extend the work presented in Chapter 5 about the evaluation of ONU power saving modes for the NGOA architectures to include the power saving potential at both the OLT and the ONU. In **Appendix B**, we present an energy saving DBA algorithm for TWDM-PON. In **Appendix C**, we present a novel algorithm to tackle the performance degradation in TWDM-PON due to excessive wavelength switching.

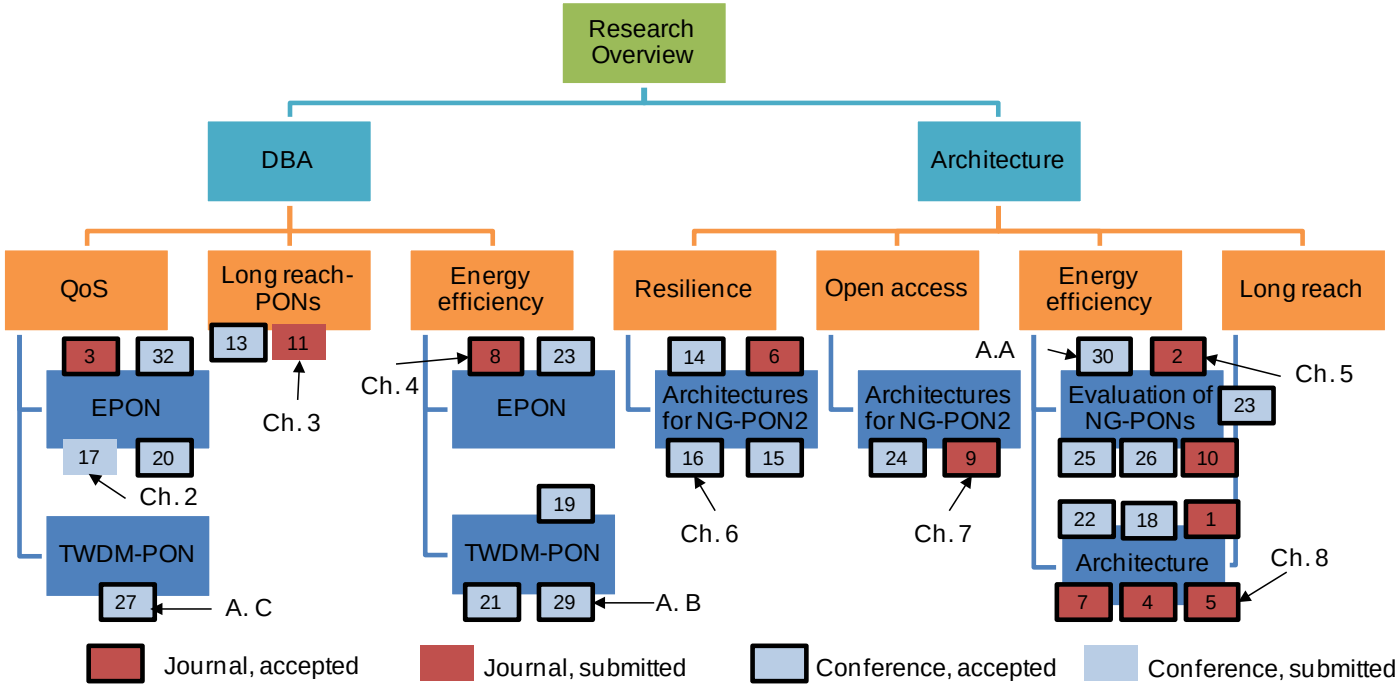

Figure 1.18 Overview of the research

1.6 Publications

The results of our work are disseminated in several papers published in international journals and presented on international conferences. Below an overview is given of all publications realized during the course of this research.

1.6.1 A1 publications referenced in the science citation index

[1] G. Das, B. Lannoo, **A. Dixit**, D. Colle, M. Pickavet, and P. Demeester, "Flexible hybrid WDM/TDM PON architectures using wavelength selective switches," *Optical Switching and Networking*, vol. 9, no. 2, pp. 156–169, Apr. 2012.

[2] **A. Dixit**, B. Lannoo, D. Colle, M. Pickavet, and P. Demeester, "ONU power saving modes in next generation optical access networks: progress, efficiency and challenges," *Optics Express*, vol. 20, no. 26, pp. B52-B63, Dec. 2012.

[3] **A. Dixit**, B. Lannoo, G. Das, D. Colle, M. Pickavet, and P. Demeester, "Dynamic bandwidth allocation with SLA awareness for QoS in Ethernet passive optical networks," *IEEE/OSA Journal of Optical Communications and Networking*, vol. 5, no. 3, pp. 240-253, March 2013.

[4] B. Lannoo, G. Das, **A. Dixit**, D. Colle, M. Pickavet, and P. Demeester, "Novel hybrid WDM/TDM PON architectures to manage flexibility in optical access networks," *Telecommunications System*, vol. 54, no. 2, pp. 147-165, Oct. 2013.

[5] **A. Dixit**, B. Lannoo, G. Das, D. Colle, M. Pickavet, and P. Demeester, "Flexible TDMA/WDMA passive optical network: energy efficient next-generation optical access solution," *Optical Switching and Networking*, vol. 10, no. 4, pp. 491-506, Nov. 2013.

[6] M. Mahloo, **A. Dixit**, J. Chen, C. M. Machuca, B. Lannoo, D. Colle, and L. Wosinska, "Towards reliable hybrid WDM/TDM passive optical networks," *IEEE Communications Magazine*, vol. 52, no. 2, pp. S14 - S23, Feb. 2014.

[7] C. Bhar, G. Das, **A. Dixit**, B. Lannoo, D. Colle, M. Pickavet, and P. Demeester, "A novel hybrid WDM/TDM PON architecture using cascaded AWGs and tunable components," *IEEE Journal of Lightwave Technology*, vol. 32, no. 9, pp. 1708 – 1716, May 2014.

[8] **A. Dixit**, B. Lannoo, D. Colle, M. Pickavet, and P. Demeester, "Energy efficient dynamic bandwidth allocation for Ethernet passive optical

networks: overview, challenges, and solutions," *Optical Switching and Networking*, http://dx.doi.org/10.1016/j.osn.2014.05.006.

[9] **A. Dixit**, M. Van der Wee, B. Lannoo, D. Colle, S. Verbrugge, M. Pickavet and P. Demeester, "Fiber and wavelength open access in WDM-and TWDM passive optical networks," *IEEE Network Magazine*, accepted.

[10] S. Lambert, B. Lannoo, **A. Dixit,** D. Colle, M. Pickavet, J. Montalvo, J.A. Torrijos, and P. Vetter, "Energy efficiency analysis of high speed triple-play services in next-generation PON deployments," *Computer Networks*, accepted.

[11] **A. Dixit**, B. Lannoo, D. Colle, M. Pickavet, and P. Demeester, "S-AMGAV: Synergized Adaptive Multi-Gate Polling with Void filling for long-reach passive optical networks," *IEEE Journal of Optical Communications and Networking*, submitted.

[12] B. Lannoo, **A. Dixit**, S. Lambert, D. Colle, and M. Pickavet, "How sleep modes and traffic demands affect the energy efficiency in optical access networks," *Photonic Network Communications*, submitted.

[13] M. Van der Wee, K. Casier, **A. Dixit**, B. Lannoo, S. Verbrugge, D. Colle, and M. Pickavet, "Techno-economic evaluation of OPEN access in FTTH networks," *IEEE/OSA Journal of Optical Communications and Networking*, submitted.

1.6.2 P1 publications referenced in conf. proc. citation index

[14] **A. Dixit,** G. Das, B. Lannoo, D. Colle, M. Pickavet, and P. Demeester, "Adaptive multi-gate polling with void filling for long-reach passive optical networks," in *IEEE International Conference of Transparent Optical Network (ICTON)*, Stockholm, June 2011.

[15] **A. Dixit,** B. Lannoo, D. Colle, M. Pickavet, and P. Demeester, "Trade-off between end-to-end reliable and Cost-Effective TDMA/WDM passive optical networks," in *IEEE International Congress on Ultra Modern Telecommunications and Control Systems and Workshops (ICUMT)*, St. Petersburg, Oct. 2012.

[16] **A. Dixit**, J. Chen, M. Mahloo, B. Lannoo, D. Colle, and M. Pickavet, "Efficient protection schemes for Hybrid WDM/TDM passive optical networks," in *IEEE International Conference on Communications (ICC)*, Ottawa, June 2012.

[17] **A. Dixit,** B. Lannoo, D. Colle, M. Pickavet, and P. Demeester, "Protection strategies for next generation passive optical networks -2," in *Optical Network and Design Modeling (ONDM)*, Stockholm, May 2014.

[18] **A. Dixit**, B. Lannoo, D. Colle, M. Pickavet, and P. Demeester, "Delay models in Ethernet long-reach passive optical networks," in *IEEE Infocom*, submitted.

1.6.3 C1 publications international conferences

[19] B. Lannoo, G. Das, **A. Dixit**, D. Colle, M. Pickavet, and P. Demeester, "Flexible hybrid WDM/TDM PON: architectures, MAC protocols and techno-economic evaluation," in *Asia Communications and Photonics Conference and Exhibition (ACP)*, Shanghai, Dec. 2010.

[20] **A. Dixit**, B. Lannoo, G. Das, D. Colle, M. Pickavet, and P. Demeester, "Evaluation of flexibility in hybrid WDM/TDM PONs," in *IEEE International Symposium on Access Spaces (ISAS)*, Yokohama, June 2011.

[21] **A. Dixit**, G. Das, B. Lannoo, D. Colle, M. Pickavet, and P. Demeester, "Jitter performance for QoS in Ethernet passive optical networks," in *European Conference on Optical Communications (ECOC)*, Geneva, Sept. 2011.

[22] **A. Dixit**, B. Lannoo, G. Das, D. Colle, M. Pickavet, and P. Demeester, "Flexibility Evaluation of hybrid WDM/TDM PONs," in *IEEE Advanced Networks and Telecommunications System (ANTS)*, Bengaluru, Dec. 2011.

[23] **A. Dixit**, B. Lannoo, D. Colle, M. Pickavet, and P. Demeester, "Wavelength switched hybrid WDM/TDMA PON: a flexible next-generation optical access solution," in *IEEE International Conference of Transparent Optical Network (ICTON)*, Coventry, July 2012.

[24] **A. Dixit,** B. Lannoo, S. Lambert, D. Colle, M. Pickavet, and P. Demeester, "Evaluation of ONU power saving modes in next generation optical access networks," in *European Conference on Optical Communications (ECOC)*, Amsterdam, Sep. 2012.

[25] B. Lannoo**, A. Dixit**, D. Colle, and M. Pickavet, "Architectural solutions for open access in next generation passive optical networks (NG-PONs)," in *Asia Communications and Photonics Conference and Exhibition (ACP)*, Guangzhou, Nov. 2012.

[26] B. Lannoo, **A. Dixit**, S. Lambert, W. V. Heddeghem, D. Colle, M. Pickavet, and P. Demeester, "Power savings in various next-generation

optical access (NGOA) systems & architectures," in *Asia Communications and Photonics Conference and Exhibition (ACP)*, Guangzhou, Nov. 2012.

[27] **A. Dixit,** B. Lannoo, D. Colle, M. Pickavet, and P. Demeester, "Energy efficient dynamic bandwidth allocation for Ethernet passive optical networks," in *IEEE Advanced Networks and Telecommunications System (ANTS)*, Bengaluru, Dec. 2012.

[28] **A. Dixit,** B. Lannoo, D. Colle, M. Pickavet, and P. Demeester, "Dynamic bandwidth allocation with optimal wavelength switching in TWDM-PONs," in *IEEE International Conference of Transparent Optical Network (ICTON)*, Cartagena, June 2013.

[29] S. Sahhaf, **A. Dixit,** W. Tavernier, D. Colle, M. Pickavet, and P. Demeester, "Scalable and energy-efficient optical tree-based greedy router," in *IEEE International Conference of Transparent Optical Network (ICTON)*, Cartagena, June 2013.

[30] **A. Dixit,** B. Lannoo, D. Colle, M. Pickavet, and P. Demeester, "Novel DBA algorithm for energy efficiency in TWDM-PONs," in *European Conference on Optical Communications (ECOC)*, London, Sep. 2013.

[31] **A. Dixit,** S. Lambert, B. Lannoo, D. Colle, M. Pickavet, and P. Demeester, "Towards energy efficiency in optical access networks," in *IEEE Advanced Networks and Telecommunications System (ANTS)*, Chennai, Dec. 2013.

[32] S. Sahhaf, **A. Dixit,** W. Tavernier, D. Colle, M. Pickavet, and P. Demeester, "All-optical tree-based greedy router," in *Optical Fiber Communications (OFC)*, San Francisco, Mar. 2014.

1.6.4 C3 publications national conferences

[33] **A. Dixit,** B. Lannoo, D. Colle, M. Pickavet, and P. Demeester, "How to make video and voice less jittery?," in *Faculty of Engineering and Architecture (FEA) PhD Symposium*, Ghent, Dec. 2011.

References

[1] A. S. Tanenbaum, Computer Networks, New Jersey: Prentice Hall, 2003.

[2] 249025-ICT OASE Project, D2.1: Requirements for European Next-Generation Optical Access Networks.

[3] S. Haykins, Communication Systems, New Jersey: Prentice Hall, 2003.

[4] DSL Forum (http://www.dslforum.org/).

[5] C. Lam, Passive optical networks: principles and practice, Academic Press, 2011.

[6] P. Odling, T. Magesacher, S. Host, P.O. Borjesson, M. Berg, and E. Areizaga, "The fourth generation broadband concept," *IEEE Communications Magazine*, vol. 47, no. 1, pp. 62 – 69, 2009.

[7] P. E. Green, "Fiber-to-the-Home: the next big broadband thing," *IEEE Communications Magazine*, vol. 42, no. 9, pp. 100-106, 2004.

[8] Fiber to the Home Council, http://www.ftthcouncil.org.

[9] T. Koonen, "Fiber to the home/fiber to the premises, what, when and where ?," *Proceedings of the IEEE*, vol. 94, no. 5, pp. 911-934, 2006.

[10] IEEE Stds. 802.3ah, Ethernet First Mile (EFM); 802.3av, 10GEPON.

[11] ITU-T Recs. G.983, BPON; G.984, GPON.

[12] E. Harstead, D. Van Veen, and P. Vetter, "Technologies for NGPON2: why I think 40 G TDM PON (XLG-PON) is the clear winner," in *Optical Fiber Communication (OFC)*, 2012.

[13] K. Grobe, M. Roppelt, A. Autenrieth, J. P. Elbers, and M. Eiselt, "Cost and energy consumption analysis of advanced WDM-PONs," *IEEE Communications Magazine*, vol. 49, no. 2, pp. s25-s32, 2011.

[14] A. Banerjee, Y. Park, F. Clarke, H. Song, S. Yang, G. Kramer, K. Kim, and B. Mukherjee, "Wavelength-division-multiplexed passive optical network (WDM-PON) technologies for broadband access: a review [Invited]," *Journal of optical networking*, vol. 4, no. 11, pp. 737-758, 2005.

[15] A. Dixit, B. Lannoo, G. Das, D. Colle, M. Pickavet, and P. Demeester, "Flexible TDMA/WDMA passive optical network: energy efficient next-generation optical access solution," *Optical Switching and Networking*, vol. 10, no. 4, pp. 491-506, 2013.

[16] Y. Luo, X. Zhou, F. Effenberger, X. Yan, G. Peng, Y. Qian, and Y. Ma, "Time and wavelength division multiplexed passive optical network

(TWDM-PON) for next generation PON stage 2 (NG-PON2)," *IEEE Journal of Lightwave Technology*, vol. 31, no. 4, pp. 587 – 593, 2013.

[17] B. Lannoo, G. Das, A. Dixit, D. Colle, M. Pickavet, and P. Demeester, "Novel hybrid WDM/TDM PON architectures to manage flexibility in optical access networks," *Telecommunications System*, vol. 54, no. 2, pp. 147-165, 2013.

[18] G. Das, B. Lannoo, A. Dixit, D. Colle, M. Pickavet, and P. Demeester, "Flexible hybrid WDM/TDM PON architectures using wavelength selective switches," *Optical Switching and Networking*, vol. 9, no. 2, pp. 156–169, 2012.

[19] A. Dixit, B. Lannoo, G. Das, D. Colle, M. Pickavet, and P. Demeester, "Evaluation of flexibility in hybrid WDM/TDM PONs," in *IEEE International Symposium on Access Spaces (ISAS)*, 2011.

[20] B. Lannoo, G. Das, A. Dixit, D. Colle, M. Pickavet, and P. Demeester, "Flexible hybrid WDM/TDM PON: architectures, MAC Protocols and techno-economic evaluation," in *Asia Communications and Photonics Conference and Exhibition (ACP)*, 2010.

[21] A. Dixit, B. Lannoo, G. Das, D. Colle, M. Pickavet, and P. Demeester, "Flexibility evaluation of hybrid WDM/TDM PONs," in *IEEE Advanced Networks and Telecommunications System (ANTS)*, 2011.

[22] A. Dixit, B. Lannoo, D. Colle, M. Pickavet, and P. Demeester, "Wavelength switched hybrid WDM/TDMA PON: a flexible next-generation optical access solution," in *IEEE International Conference on Transparent Optical Networks (ICTON)*, 2012.

[23] K. Kanonakis, I. Tomkos, T. Pfeiffer, J. Prat, P. Kourtessis, "ACCORDANCE: a novel OFDMA-PON paradigm for ultra-high capacity converged wireline-wireless access networks," in *IEEE International Conference on Transparent Optical Networks (ICTON)*, 2010.

[24] J. M. Fabrega, L. Vilabru, and J. Prat, "Experimental demonstration of heterodyne phase-locked loop for optical homodyne PSK receivers in PONs," in *IEEE International Conference on Transparent Optical Networks (ICTON)*, 2008.

[25] L. Kazovsky, S. Wong, S. Yen, V. Gudla, P. Afshar, and D. Larrabeiti, "Next-generation optical access networks: goals, challenges and research opportunities," in *Acreo/KTH Seminar*, 2010.

[26] M. Mahloo, A. Dixit, J. Chen, C. M. Machuca, B. Lannoo, D. Colle, L. Wosinska, "Towards reliable hybrid WDM/TDM passive optical

networks," *IEEE Communications Magazine*, vol. 52, no. 2, pp. S14 - S23, 2014.

[27] A. Dixit, J. Chen, M. Mahloo, B. Lannoo, D. Colle, and M. Pickavet, "Efficient protection schemes for hybrid WDM/TDM passive optical networks," in *International Conference of Communications* (ICC), 2012.

[28] A. Dixit, B. Lannoo, D. Colle, M. Pickavet, and P. Demeester, "Trade-off between end-to-end reliable and cost-effective TDMA/WDM passive optical networks," in *IEEE International Congress on Ultra Modern Telecommunications and Control Systems and Workshops (ICUMT)*, 2012.

[29] A. Dixit, B. Lannoo, D. Colle, M. Pickavet, and P. Demeester, "Protection strategies for next generation passive optical networks -2," in *Optical Networking and Design Modeling (ONDM)*, 2014.

[30] IEEE 802.3av, "Power saving adhoc report," 2008.

[31] A. Dixit, B. Lannoo, G. Das, D. Colle, M. Pickavet, and P. Demeester, "Evaluation of ONU power saving modes in next generation optical access networks," in *European Conference on Optical Communication (ECOC)*, 2012.

[32] A. Dixit, B. Lannoo, D. Colle, M. Pickavet, and P. Demeester, "ONU power saving modes in next generation optical access networks: progress, efficiency and challenges," *Optics express*, vol. 20, no. 26, pp. B52-B63, 2012.

[33] A. Dixit, M. Van der Wee, B. Lannoo, D. Colle, S. Verbrugge, M. Pickavet and P. Demeester, "Fiber and wavelength open access in WDM-and TWDM passive optical networks," *IEEE Network Magazine*, accepted.

[34] B. Lannoo, A. Dixit, D. Colle, and M. Pickavet, "Architectural solutions for open access in next generation passive optical networks (NG-PONs)," in *Asia Communications and Photonics Conference and Exhibition (ACP)*, 2012.

[35] OASE white paper, "Next Generation Optical Access Seamless Evolution."

[36] A. Dixit, B. Lannoo, G. Das, D. Colle, M. Pickavet, and P. Demeester, "Dynamic bandwidth allocation with SLA awareness for QoS in Ethernet passive optical networks," *IEEE/OSA Journal of Optical Communications and Networking*, vol. 5, no. 3, pp. 240-253, 2013.

[37] W. Willinger, M. Taqqu, R. Sherman, and D. Wilson., "Self-similarity through high variability: statistical analysis of Ethernet LAN traffic at

the source level," *IEEE/ACM Transactions on Networking*, vol. 5, no. 1, pp. 71-86, 1997.

[38] W.E Leland, M. Taqqu, W. Willinger, and D. Wilson., "On the self-similar nature of Ethernet traffic," *IEEE/ACM Transactions on Networking*, vol. 2, no. 1, pp. 1-15, 1994.

2

Delay Models in Ethernet Long-Reach Passive Optical Networks

Do not worry about your difficulties in Mathematics. I can assure you mine are still greater.

−ALBERT EINSTEIN

In this chapter, we introduce the delay models for the dynamic bandwidth allocation (DBA) algorithms of Ethernet passive optical networks (EPONs). Using these delay models, we examine several bandwidth-allocation paradigms for EPONs.

Abhishek Dixit, Bart Lannoo, Didier Colle, Mario Pickavet, and Piet Demeester.

Submitted to IEEE Infocom, 2015.

Abstract: A variety of dynamic bandwidth allocation (DBA) algorithms have been proposed to foster the performance of Ethernet passive optical networks (EPONs). These DBA algorithms use packet delay as an important quality of service (QoS) metric. This has led to a significant interest in developing mathematical models for analyzing the delay. These delay models often provide valuable qualitative results and worthwhile insights in understanding the mechanism of the delay and the manner in which it depends upon algorithm characteristics. Up to now, the delay models have been developed under some approximations, e.g., fixed packet sizes, negligible distances between a server and its users, a gated bandwidth assignment method, and Poisson traffic. In this paper, we develop the delay models for more realistic scenarios than the current state-of-the-art, including gated and limited bandwidth assignment methods, Poisson and Pareto traffic, and long-reach PONs in which the distance between the server and the users is significant and hence not negligible. We model different DBA paradigms, such as REPORT after data, REPORT before data, and multi-thread polling. The results from simulation experiments confirm the accuracy of the delay models.

2.1 Introduction

A passive optical network (PONs) has attained a wide attraction for fiber-to-the-home (FTTH) networks as it uses only passive components to connect optical network units (ONUs) at a subscriber's end and an optical line terminal (OLT) at a central office, enabling gigabit speeds at a low cost. Currently, they are standardized in time division multiplexed (TDM) PONs like Ethernet PON (EPON) and gigabit-capable PON (GPON). This paper focuses on EPON, which has become popular as it combines inexpensive Ethernet equipment with high-speed fiber infrastructure.

EPON is a tree-structured PON that uses wavelength division multiplexing (WDM) to separate the upstream (ONU to OLT) and downstream (OLT to ONU) transmission. In the downstream direction, the OLT broadcasts data to every ONU (Figure 2.1) and there is no requirement of a medium access control (MAC) protocol. In the upstream direction, time division multiple access (TDMA) should be used for scheduling data transmissions from the ONUs to the OLT to avoid collisions between the users' data. To arbitrate this bandwidth allocation, IEEE 802.3ah has standardized multi-point control protocol (MPCP), which uses 64 byte GATE and REPORT Ethernet control messages. The ONU sends REPORT messages carrying bandwidth request information based on its queue size, and the OLT sends back a GATE message to the ONU informing about the allocated bandwidth (or transmission window). The OLT makes the decision about the granted bandwidth using a dynamic bandwidth allocation

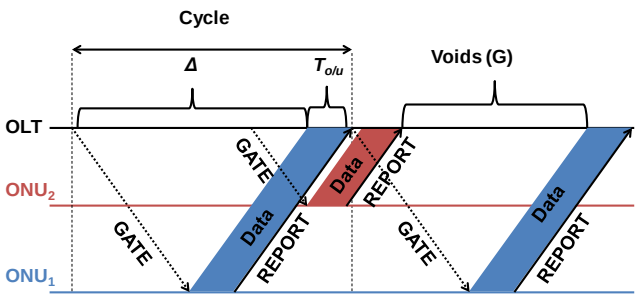

Figure 2.1: Typical GATE and REPORT exchange in EPON

(DBA) algorithm. Several DBA algorithms have been proposed [1]-[17]. An important example of an EPON DBA is interleaved polling with adaptive cycle time (IPACT) [2] in which the polling of each ONU is interleaved, i.e., the next ONU is polled before the transmission from the previous one has been completed at the OLT.

These algorithms have primarily used a gated or limited service as bandwidth assignment method. In the gated service, an OLT allocates to each ONU a transmission window equal to the amount requested by the ONU in the last REPORT message. In the limited service, an OLT allocates up to some maximum transmission window to prevent an ONU from monopolizing the entire available bandwidth.

Although a few analytical results exist for the performance evaluation of the DBAs in EPONs [18]-[23], all these works used approximations. For example, in [18], the authors assumed that a REPORT message accounts only the packets that arrive before the start of the preceding data interval. This assumption is different from how MPCP works. In [19], the authors evaluate the average packet delay under the approximation of either a heavy or a light load. In [20], the authors analyze both the gated and limited service, but assume only a fixed packet size. In [21], the authors derive an expression of the mean packet delay for the gated service with one ONU, and provide an approximated expression for multiple ONUs. In [22], the authors assume negligible distances between the OLT and the ONUs, which makes the model unrealistic for practical scenarios.

All the above-mentioned papers analyze the delay for Poisson distributed traffic in which the time between two successive arrivals, i.e., the packet inter-arrival times, are exponentially distributed. Poisson traffic provides a good estimate for voice traffic but it does not capture the characteristics of video and web traffic, which form the major fraction of the Internet traffic and are more faithfully represented by Pareto distributed bursty traffic [3]. Hence, it is paramount to analyze the delay also for a bursty traffic arrival. Paper [23]

provides the delay models for bursty traffic but for negligible OLT-ONU distances and for a gated service.

In this paper, we analyze the mean packet delay for an EPON with a gated as well as with a limited service for both Poisson and bursty traffic. We include a variety of DBA paradigms, such as REPORT before data (RBD) [4], REPORT after data (RAD) [2], and multi-thread polling (MTP) [5]. The delay expressions are shown to match closely with the results from simulation experiments.

The remainder of this paper is organized as follows. In section 2.2, we present delay models in EPON for Poisson traffic. Section 2.3 models delay in EPON for Pareto distributed bursty traffic. Finally, section 2.4 provides a summary of our contribution and points out issues for further investigations.

2.2 Delay models for Poisson traffic

In this section, we first present the delay models for EPON (section 2.2.1) and then discuss the analytical and simulation results (section 2.2.2).

2.2.1 Delay modeling

We focus on the mean packet[23] delay at the ONU's interface. This delay consists of three components:

Processing delay is between the time the packet is correctly received and the time the packet is assigned to an outgoing queue for transmission.

Queuing delay is between the time the packet is assigned to a queue for transmission and the time it starts being transmitted. During this time, the packet waits while other packets in the queue are transmitted.

Transmission delay is between the times that the first and the last bit of the packet are transmitted.

The processing delay is assumed to be independent of the amount of traffic handled by the corresponding node, and is thus ignored in the subsequent analysis. We only focus on the queuing and the transmission delays.

We consider a queuing system in which packets arrive according to a Poisson process with rate λ, and the packet's size has a general distribution[24]. The packet size influences the service time, which corresponds to the packet transmission time and is equal to L/C, where L is the length of the packet in bits and C is the transmission capacity (the rate at which the interface accepts bits) of the link in b/s. We assume that the service time of the ith packet is given by a random variable X_i, and the random variables (X_1, X_2, ..) are identically distributed,

[23] An ONU data block represented in Figure 2.1 may consist of many packets. We also ignore the distinction between packets and frames; thus, packet lengths include frame headers and trailers.
[24] General distribution is a standard nomenclature used in queuing theory.

mutually independent, and independent of the inter-arrival times [24].

Let

$$\bar{X} = E\{X\} = \frac{1}{\mu} = \text{Average service time}$$

$$\bar{X^2} = E\{X^2\} = \text{Second moment of service time}$$

The objective is to determine the waiting time of the packets in the queue. For this, we first denote the following symbols:

W_i = Waiting time (same as queuing delay) seen by the ith packet. This is the average time spent by a packet waiting in a queue (but not under transmission).

R_i = Residual time seen by the ith packet. This is the remaining time for the completion of the service or idle period in process when the ith packet arrives. For example, if packet j is already being served when packet i arrives, R_i is the remaining time until packet *j's* service time is complete. In addition, upon arrival, a packet can encounter an ongoing idle period, and then R_i is the remaining duration of the idle period.

N_i = Number of packets found waiting in the queue (but not under transmission) by the ith packet upon arrival.

Y_i = Duration of all the whole reservations[25] and idle periods during which packet i must wait before being transmitted.

m = Number of users (same as the number of ONUs).

A = Sum of guard time T_g between two ONU's slot and a time T_r to send one REPORT message.

An EPON system can be modeled as an M/G/1[26] queue with reservations [24]. EPONs divide the bandwidth over time into a portion used for packet transmissions and another portion used for reservation or polling messages. We will see that these polling mechanisms also create idle periods as the exchange of REPORT and GATE messages takes at least one round trip time (RTT, denoted as Δ in the remainder of the paper). Thus, the time axis is divided into data intervals, where actual data are transmitted, reservation intervals (time to sent 64 Bytes REPORT messages + 8 Bytes preamble) used for scheduling future data, and other idle periods, Figure 2.2a.

In EPON, an OLT polls every ONU in a round robin manner. The time

[25] Only whole reservations or idle periods, excluding already started reservations or idle periods.

[26] An M/G/1 queue is a queue model where arrivals are Markovian (modulated by a Poisson process), service times have a General distribution and there is a single server.

interval between polling the same ONU is referred to as a cycle or cycle length (L_c, Figure 2.2a). Thus, a cycle contains the reservation and data interval of every ONU. A cycle also contains idle periods, which are formed as the cycle can never be less than Δ. If the data from all ONUs are not sufficient to fill up an entire cycle, the bandwidth corresponding to the remaining duration of the cycle is wasted. An ONU first reports the packets arriving in the arrival interval and then those packets (all reported packets if the gated service is used) are transmitted in the transmission interval, Figure 2.2b.

The reservation interval of every user can precede or follow its data interval, leading to two varieties of DBA algorithms: RAD or RBD.

In the derivation of the delay model, we typically assume the RAD approach (as used in IPACT). In section 2.2.1.a, we model the delay for the gated service when the OLT and ONUs have negligible physical distances between them. Then we model the effects of physical distances in section 2.2.1.b. Next, we present the model for the RBD case in section 2.2.1.c. Thereafter, we derive an expression for the mean packet delay in limited service in 2.2.1.d. Finally, we extend the model for MTP in 2.2.1.e.

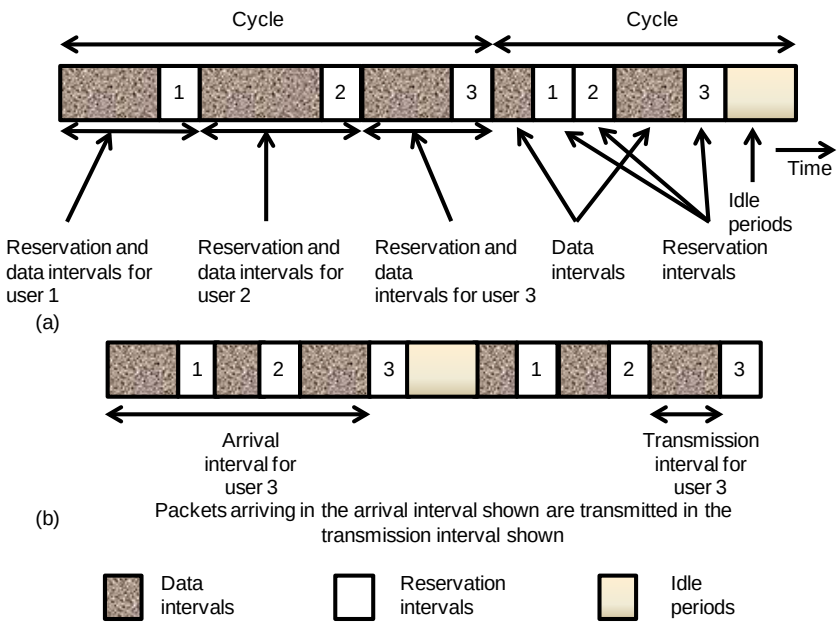

Figure 2.2: (a) Demonstration of cycle, data and reservation intervals, and idle periods (b) Demonstration of arrival and transmission interval for the gated service

2.2.1.a Gated service without propagation delays:

Step 1. Determining waiting time W

The waiting time W consists of three terms: first, the mean residual time for the packet or reservation in progress; second, the expected time to transmit N_i packets that must be transmitted before packet i; and third, the expected duration of reservation intervals. Thus,

$$E\{W_i\} = E\{R_i\} + \frac{E\{N_i\}}{\mu} + E\{Y_i\} \tag{1}$$

Taking the limit as $i \to \infty$, we obtain

$$W = R + \frac{N_Q}{\mu} + Y \tag{2}$$

where W, R, N_Q, Y are limits (as $i \to \infty$) of the average waiting time, residual time, number of packets found in the queue, and idle periods, respectively, corresponding to the ith packet.

By using Little's theorem, we have

$$N_Q = \lambda W \tag{3}$$

and by substituting it in (2), we obtain

$$W = \frac{R + Y}{1 - \rho} \tag{4}$$

where $\rho = \frac{\lambda}{\mu}$ *is the network load.*

Step 2. Determining R

R can be computed using the mean residual theorem [24],

$$R = P(\overline{X})\frac{\overline{X^2}}{2\overline{X}} + P(\overline{A})\frac{\overline{A^2}}{2\overline{A}} \tag{5}$$

where $P(\overline{X})$ is the probability that a packet is served, and $P(\overline{A})$ is the probability of encountering a REPORT message. Note that these probabilities are nothing but the probability of service and idle periods, which are ρ and 1-ρ.

Substituting the values of probabilities in (5), we get

$$R = \rho\frac{\overline{X^2}}{2\overline{X}} + (1-\rho)\frac{\overline{A^2}}{2\overline{A}} \tag{6}$$

and simplifying, we obtain

$$R = \lambda\frac{\overline{X^2}}{2} + (1-\rho)\frac{A}{2} \tag{7}$$

We assume that the periods of overheads are constant, which means that $\overline{A^2} = (\overline{A})^2 = A^2$.

Step 3. Determining Y

Denote

$$\alpha_{lj} = E\{Y_i \mid \text{packet } i \text{ arrives in user } l\text{'s reservation or data interval and belongs to user } (l+j) \bmod m\}$$

Let us assume that a packet arrives in user *l's* reservation or data interval. When a packet arrives in its own data interval (i.e., j=0), it is reported in the subsequent REPORT message and served in the next data interval. It, thus, encounters *mA* overheads. On the other hand, when it arrives during its REPORT interval, it sees additional (m-1)A overheads before first being reported, resulting in *(2m*-1*)A* overheads in total. Similarly, when a packet arrives in the data interval belonging to user *(l+j) mod m*, it encounters *(m+j)A* overheads. On the other hand, when the packet arrives in the reservation interval, it sees *(m+j*-1*)A* overheads. Thus, we have

$$\alpha_{lj} = \begin{cases} \rho mA + (1-\rho)(2m-1)A, & j = 0 \\ \rho(m+j)A + (1-\rho)(m+j-1)A, & j > 0 \end{cases} \tag{8}$$

Assuming that a packet *i* has equal probability 1/m for arriving in any users' reservation or data interval, and for belonging to any user, we have

$$Y = \frac{1}{m^2} \sum_{l=0}^{m-1} \sum_{j=0}^{m-1} \alpha_{lj} = \frac{3m-1}{2} A \tag{9}$$

Step 4. Combining W, R and Y

Substituting (7) and (9) in (4), the total waiting time *W* can be computed as:

$$W = \frac{\lambda \overline{X^2}}{2(1-\rho)} + \frac{A}{2}\left(\frac{3m-\rho}{1-\rho}\right) \tag{10}$$

We can see that a fraction 1-ρ time is used on reservations. Since there are *m* reservation intervals of duration *A* per cycle, we can conclude that the expected cycle length ($E[L_c]$) must be $mA/(1-\rho)$. Using this, we can express the waiting time as:

$$W = \frac{\lambda \overline{X^2}}{2(1-\rho)} + \left(\frac{3m-\rho}{2m}\right) E[L_c] \tag{11}$$

The total packet delay (T_d) can be computed as $\overline{X} + W$.

2.2.1.b Gated service with propagation delays

When there are finite propagation distances between the OLT and the ONUs, the cycle length can no longer be shorter than Δ. This increases $E[L_c]$ and creates voids (*G*) in the cycle as:

$$G = E[L_c](1-\rho) - mA \tag{12}$$

These voids are computed by deducting the data period and overheads from the overall cycle. We can assume that these voids are formed uniformly across the cycle. Because of this void creation, a packet encounters longer idle periods, which can be tackled by replacing A by ($A+G/m$) in (10), leading to waiting time as derived in (11). Thus in the presence of physical distances between the OLT and the ONUs, eq. (11) can still be used by appropriately choosing L_c.

Step 1. Determining L_c

To determine L_c, we divide the analysis in two parts:

a) Light and moderate load

In PONs, at light and moderate load, L_c is primarily influenced by the reach of the PON. We denote this L_c as L_{cl}. In this case, L_{cl} can be determined as (cf. Figure 2.1):

$$E[L_{cl}] = \Delta + 2T_r + E[T_{o/u}] \tag{13}$$

where $E[T_{o/u}]$ denotes the average transmission window per ONU.

Note that this equation assumes that the load is not very heavy and the sum of transmission windows of (m-1) ONUs is shorter than Δ.

Assuming steady state and the ONUs to be uniformly loaded, we can compute $E[T_{o/u}]$:

$$\rho = \frac{mE[T_{o/u}]}{E[L_{cl}]} = \frac{mE[T_{o/u}]}{\left(\Delta + 2T_r + E[T_{o/u}]\right)} \tag{14}$$

Using (13) and (14), $E[L_c]$ can be defined as:

$$E[L_{cl}] = \frac{m(\Delta + 2T_r)}{m - \rho} \tag{15}$$

b) Very heavy loads :

At very heavy loads, the sum of transmission windows of (m-1) ONUs will not always be shorter than Δ, and thus eq. (13) cannot be used. To calculate the cycle length at heavy loads, we first define L_{ci}, which is the cycle length independent of PON's reach and just dependent upon the load. This L_{ci} is the same as the cycle length in zero-reach PON (cf. section 2.2.1.a) and can be formulated as:

$$E[L_{ci}] = \frac{mA}{1-\rho} \tag{16}$$

The actual cycle length L_{ch} can be formulated as the average of the maximum of the random variables L_{cl} and L_{ci}:

$$E[L_{ch}] = E[Max\{L_{cl}, L_{ci}\}] \tag{17}$$

It is beyond doubt that the exact calculation of this equation is complex. For this paper, as a good approximation [26], we have used the following:

$$E[L_{ch}] \approx Max\{E[L_{cl}], E[L_{ci}]\} \tag{18}$$

Note that this is an approximation and it can lead to significant divergences, especially at the heavy load. Nevertheless, for most interesting window of operating network load (lower than 0.9), and a long reach (longer than 20 km), this approximation will lead to sufficiently close results with the simulation. As a future work, the calculation of eq. (17) will be a valuable contribution.

Step 2. Determining W

By substituting (18) in (11), the overall waiting time can be calculated by

$$W \approx \frac{\lambda \overline{X^2}}{2(1-\rho)} + \left(\frac{3m-\rho}{2m}\right) Max\{\frac{m(\Delta + 2T_r)}{m-\rho}, \frac{mA}{1-\rho}\} \tag{19}$$

2.2.1.c Gated service with REPORT before data

If the REPORT is sent at the beginning of the packet, the waiting time can be computed by suitably adapting *Y*. The expression for *R* remains the same as before.

Step 1. Determining Y

In the RBD approach, when a packet arrives in its own data or reservation interval, it encounters 2*mA* overheads before it can be transmitted. On the other hand, when a packet arrives in the data or reservation interval belonging to user *(l+j) mod m*, it encounters *(m+j)A* overheads. Thus, we have

$$\alpha_{lj} = \begin{cases} 2mA, & j = 0 \\ (m+j)A, & j > 0 \end{cases} \tag{20}$$

Using this α_{lj}, Y can be calculated as:

$$Y = \frac{1}{m^2} \sum_{l=0}^{m-1} \sum_{j=0}^{m-1} \alpha_{lj} = \frac{3m+1}{2} A \tag{21}$$

Step 2. Determining W

W can be calculated by substituting (7) and (21) in (4):

$$W = \frac{\lambda \bar{X}^2}{2(1-\rho)} + \frac{(3m+2-\rho)A}{2(1-\rho)} \tag{22}$$

Using substitution similar to in eq. (11), eq. (22) can be expressed as:

$$W = \frac{\lambda \bar{X}^2}{2(1-\rho)} + \frac{(3m+2-\rho)}{2m} L_c \tag{23}$$

Step 3. Determining L_c

For the RBD approach, L_c is at least

$$L_{c\,\min} = \Delta + 2T_r \tag{24}$$

and thus it can be computed as:

$$L_c \approx Max\{\Delta + 2T_r, \frac{mA}{1-\rho}\} \tag{25}$$

2.2.1.d Limited service

In the limited service, a packet needs to be reported again if the queue size exceeds the maximum transmission window per ONU, resulting in the increase in the overheads. Thus, we first calculate Y and consecutively W.

Step 4. Determining Y

We can derive Y in two different ways, leading to eq. (26) and (28), which will be shown to be identical. To calculate the formula for Y for the limited system, let us first define q as the probability that the requested data is less than T_{max}, where T_{max} is the maximum transmission window per ONU used in the limited service.

A packet arriving during user *l's* data or reservation interval will belong to any user with equal probability *1/m*. Therefore, in steady-state, the expected number of packets waiting in the queue of the user is $\lim_{i\to\infty} E\{N_i\}/m = \lambda W/m$. With the maximum transmission window of T_{max}, the packets ahead in the queue are served in $N_q = \lambda W P_s / m T_{\max}$ groups on average, where P_s is the average packet size.

First method − The mean number of extra reservation cycles experienced by an arriving packet is $N_q mA$, except for a packet that arrives outside its ONU's data interval (with probability = $(1-\frac{\rho}{m})$) and finds the total service time of prior packets in the queue larger than T_{max} (with probability = $1-q$). For such a packet, mA overheads are already included. Hence for the limited service, additional overheads of $N_q mA-(1-q)(1-\frac{\rho}{m})mA$ are formed compared to the gated service (Y_{gated}).

$$\begin{aligned} Y &= Y_{gated} + N_q mA-(1-q)(1-\frac{\rho}{m})mA \\ &= \frac{3m-1}{2}A + N_q mA-(1-q)(1-\frac{\rho}{m})mA \end{aligned} \tag{26}$$

Second method − Y can also be calculated from α_{lj}. In this case, α_{lj} can be expressed as:

$$\alpha_{lj} = \begin{cases} \rho(N_q+1)mA+(1-\rho)(1-q)((N_q+1)m-1)A+ \\ (1-\rho)q((N_q+2)m-1)A,\ j=0 \\ \rho(1-q)(mN_q+j)A+\rho q((N_q+1)m+j)A+ \\ (1-\rho)(1-q)(mN_q+j-1)A+(1-\rho)q((N_q+1)m+j \\ ,\ j>0 \end{cases} \tag{27}$$

Using this α_{lj}, Y can be calculated as:

$$Y = \frac{1}{m^2}\sum_{l=0}^{m-1}\sum_{j=0}^{m-1}\alpha_{lj} = \frac{A}{2}(-2\rho q+2\rho+2mN_q+2mq+m-1) \tag{28}$$

Note that the formulation of Y in (26) and (28) can be shown to be identical upon a mathematical simplification.

Step 1. Calculating q

The next step is to calculate q. q can be calculated using the property of Poisson distribution, where the probability of n packets arriving in an interval τ with an arrival rate λ is given as:

$$P\{n\} = e^{-\lambda\tau}\frac{(\lambda\tau)^n}{n!} \tag{29}$$

Using this property, q can be computed as:

$$q = \sum_{n=0}^{T_{\max}/P_S} e^{-\lambda L_C}\frac{(\lambda L_C)^n}{n!} \tag{30}$$

where $\lambda = \dfrac{\rho C}{P_s m}$.

Step 2. Calculating L_c

Cycle length in the limited approach is bounded by T_{max} per ONU, this leads to

an additional factor compared to (18) in the definition of L_c as:

$$L_c \approx Min\left\{ Max\{\frac{m(\Delta + 2T_r)}{m-\rho}, \frac{mA}{1-\rho}\}, m(\frac{T_{\max}}{C} + A) \right\} \tag{31}$$

Step 3. Determining W

W can be calculated by substituting (7) and (28) in as:

$$W = \frac{m\lambda \overline{X^2} + L_c(1-\rho)(2mq + m + \rho - 2\rho q)}{2m(1-\rho - \frac{A\lambda P_s}{T_{\max}})} \tag{32}$$

Note that for the gated case, i.e., when T_{max} is ∞, and consecutively q as 1, eq. (32) will reduce to (11).

We would like to mention that this model does not account the effects of other overheads like the formation of unused slot remainders (USRs) [3], which are hard to quantify for a general packet size distribution and are only significant at a heavy load.

2.2.1.e Extension of the model to multi-thread polling (MTP)

To compensate for the delay degradation in LR-PONs, the MTP algorithm was proposed in [5]. This algorithm polls ONUs using multiple bandwidth scheduling cycles, which are executed in parallel, i.e., the next polling cycle for an ONU is started before the previous one has finished. The number of polling process (or threads) in MTP is fixed.

We will now show how we can apply this model to MTP. Let us first assume that the number of threads in MTP is N_g. Because of an increased number of threads, a packet sees N_g times more overheads than before. So, now

$$A \rightarrow N_g(A + \frac{G}{m}) \tag{33}$$

In MTP, as the ONUs can be polled more frequently than before, a higher number of parallel threads effectively mask Δ. This effect can be captured in the model by adopting Δ as

$$\Delta \rightarrow \frac{\Delta}{N_g} \tag{34}$$

2.2.2 Analytical and simulation results

In this section, we present the analytical and simulation results for Poisson traffic. The simulation model is implemented in Opnet. We have assumed upstream bandwidth of the EPON as 1 Gb/s, the number of ONUs as 16, a buffer size Q_{max} of 1 MB, the packet size as exponentially distributed with an average packet size of 560 B, and a T_{max} of 15000 B. Most results are drawn with respect to load, which essentially is same as ρ. The analytical and simulation results match in all cases with a satisfactory precision.

Figure 2.3 and Figure 2.4 show the delay in the gated service with the RAD approach. As expected, the minimum delay bound depends upon the reach of the solution and the network load. When T_g is small (of 1 µs, cf. Figure 2.3), the delay does not increase sharply even until a very heavy load of 0.9. On the other hand, when T_g is increased to 5 µs (cf. Figure 2.4), the delay increases sharply with the network load. These results clearly emphasize the performance degradation that occurs with a longer reach and a heavier load.

Figure 2.5 depicts the performance of the RBD approach when combined with the gated service. There is no significant difference between the delay performance of the RAD and RBD approach. This is consistent with the finding in paper [6] that claims that there is a negligible difference between the RAD and RBD approach especially for online algorithms. However, the RAD and RBD approach may make a difference for offline algorithms, which can further be analyzed as a future work.

Figure 2.6 and Figure 2.7 present the delay of the limited service with T_g as 1 µs and 5 µs respectively. The limited service achieves a low delay performance compared to the gated service, especially at a heavy load. This is because as the load increases the probability of the queue sizes to become larger than T_{max} increases, and thus the packets encounter more overheads. At very heavy loads, for the case when T_g is 5 µs, the simulation results are slightly higher than the analytical results as the current model does not account USRs. Figure 2.8 presents the delay when T_{max} is varied. As expected, higher T_{max} leads to a lower delay.

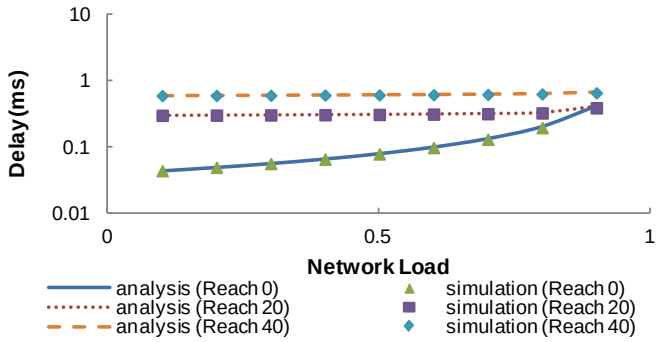

Figure 2.3: Effect of reach on the performance of the gated service with RAD, T_g = 1 µs

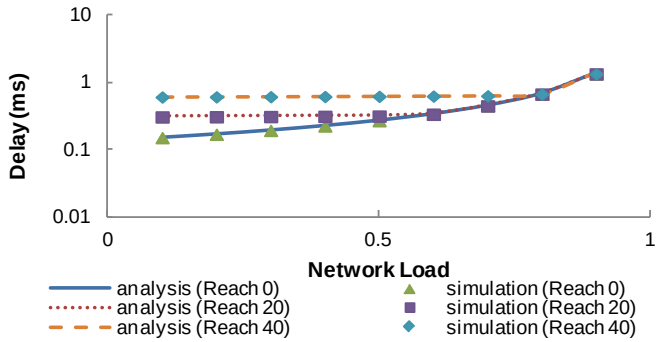

Figure 2.4: Effect of reach on the performance of the gated service with RAD, T_g = 5 µs

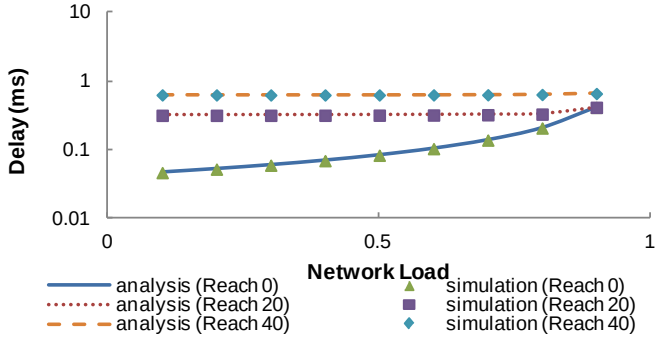

Figure 2.5: Effect of reach on the performance of the gated service with RBD, T_g = 1 µs

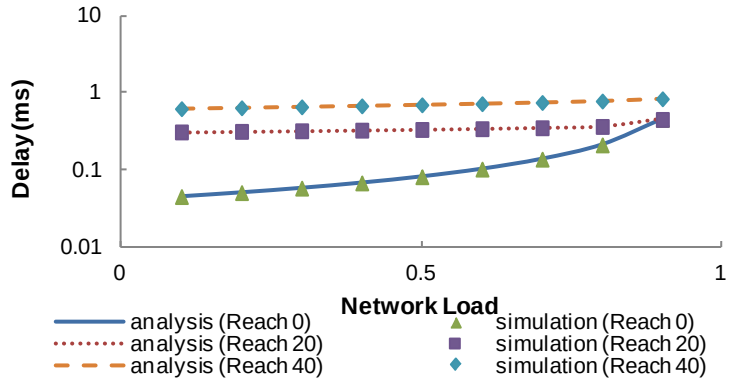

Figure 2.6: Effect of reach on the performance of the limited service with RAD, T_g = 1 µs

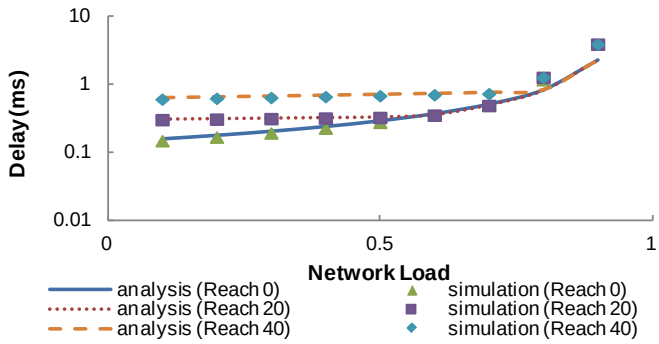

Figure 2.7: Effect of reach on the performance of the limited service with RAD, T_g = 5 µs

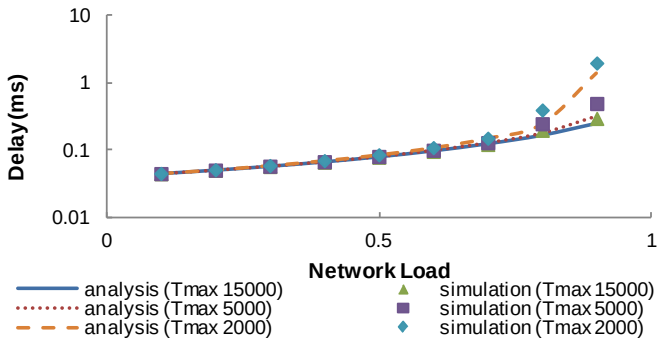

Figure 2.8: Effect of T_{max} on the performance of the limited service with RAD, T_g = 1 µs and Δ = 0

Figure 2.9 compares the performance of MTP when N_g is varied. As N_g increases, the delay of MTP decreases. This finding has also been verified in [7] in which the performance of MTP deteriorates with an increasing N_g, because the packets encounter more overheads. MTP also does not improve the performance when compared to IPACT (e.g., N_g =1), clearly limiting its utility. Note that in paper [5], MTP improves the performance when compared to an offline algorithm, which is sometimes also called IPACT with stop [1].

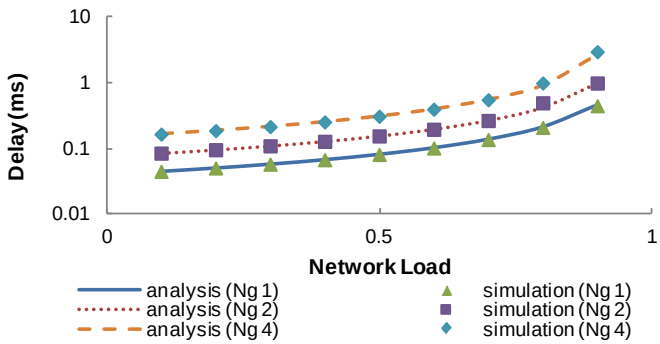

Figure 2.9: Effect of N_g on the performance of MTP with RAD, T_g = 1 μs and Δ = 0

2.3 Delay models for Pareto distributed bursty sources

In this section, we model the delay in case the sources are bursty, which means that a burst (ON period) is followed by an OFF period. The delay for bursty traffic is complex and is mainly left out in the current literature. For the analysis in this paper, we assume that the length of the ON and OFF period are Pareto distributed. Pareto distributed sources are assumed to replicate the behavior of the Internet traffic most precisely [25]. A Pareto distributed source is characterized by the shape (α) and location parameter (β), these parameters adopt different values for the ON (α_{on}, β_{on}) and the OFF period ($\alpha_{off}, \beta_{off}$).

2.3.1 Delay modeling

For this analysis, we assume one bursty Pareto distributed source per user. First, we define the following parameters:

R_{on} = maximum data rate (bits/s) of an ONU in an ON period.

R_n = normalized R_{on}, i.e., R_{on}/C.

$L_c(n)$= average cycle length if n ONUs are ON.

P_{on} = probability of one ONU to be ON.

$P(n)$= probability of n ONUs to be ON.

$L_s(n)$= stable cycle length if n ONUs are ON.

The average cycle length can be determined based on $L_c(n)$ and $P(n)$ as:

$$L_C = \sum_{n=0}^{m-1} P(n) L_C(n) \tag{35}$$

For calculating $L_c(n)$, we introduce the notion of stable and transitionary cycle length. To explain this, let us first assume only two states with the number of ONUs as n and n-1, and assuming the transitions only between these two states by either the addition or the deletion of an active ONU. If the ONUs remain in these states for a very long time, the average cycle length can be given as the average of the stable cycle length in the two states. However, if the ONUs remain in one state for a very short period, and make frequent transitions between the states, the average cycle length depends upon factors like the time to reach a stable cycle length ($\delta(n)$), and the time for which the ONUs remain in state n and n-1. Figure 2.10 explains it clearer. For example, $\delta(n)$ is the time to make a transition between the states n-1 and n. However, the state n lasts for only $t(n,\rho)$ time, which increases the cycle length by ξ. Thus the average cycle length is:

$$L_C(n) \approx L_S(n-1) + \xi \frac{t(n,\rho)}{t(n,\rho) + t(n-1,\rho)} \tag{36}$$

The above equation can be calculated using the area under the triangle formed by the transition from state n-1 to state n, averaged over the combined duration of both states. Note that the height of the triangle depends upon the time an ONU spends in state n.

Assuming the RAD approach and the gated service, the stable values of the cycle length can be computed based on (18), when the normalized load is stable, i.e., less than 1. When the load exceeds 1, the cycle length will be limited by the maximum buffer size at the ONUs. We can thus define $L_s(n)$ as follows:

$$L_C(n) \approx L_S(n-1) + \xi \frac{t(n,\rho)}{t(n,\rho) + t(n-1,\rho)} \tag{37}$$

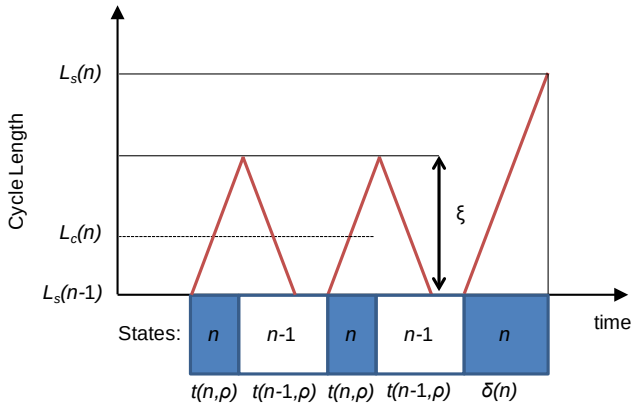

Figure 2.10: Cycle length variation on arrival of a burst

$$L_S(n) = \begin{cases} Max\{\dfrac{mA}{1-nR_n}, \dfrac{m(\Delta+2T_r)}{m-\rho}\} & nR_n < 1 \\ \left(\dfrac{Q_{\max}}{C} + A\right)m & nR_n > 1 \end{cases} \tag{38}$$

Using the properties of Pareto distributed traffic, following equations can be formulated:

$$P_{on} = \frac{\rho}{mR_n} \tag{39}$$

$$P(n) = \frac{m!}{n!(m-n)!} P_{on}{}^{n} (1-P_{on})^{m-n} \tag{40}$$

$$t(n,\rho) = P(n)\left(\frac{\alpha_{on}\beta_{on}}{\alpha_{on}-1} + \frac{\alpha_{off}\beta_{off}}{\alpha_{off}-1}\right) \tag{41}$$

t(n,ρ) depends upon the probability of *n* users to be ON, and the average ON and the OFF period for a single user.

$$\delta(n) = \frac{\{L_S(n) - L_S(n-1)\}}{R_n} \tag{42}$$

δ(n) depends upon the difference in the stable cycle lengths and the added rate at which the ONU's buffer and consecutively cycle lengths will increase.

Both ξ and $L_c(n)$ depends upon whether $t(n,\rho)$ is greater or smaller than $t(n-1,\rho)$. This is illustrated in the equations below:

$$\xi = \begin{cases} 0, & \text{for } L_S(n) = L_S(n-1) \\ \dfrac{t(n,\rho)R_n}{\rho}, & \text{for } L_S(n) \neq L_S(n-1) \\ & \& \, t(n,\rho) < t(n-1,\rho) \\ \dfrac{t(n-1,\rho)R_n}{\rho}, & \text{for } L_S(n) \neq L_S(n-1) \\ & \& \, t(n,\rho) \geq t(n-1,\rho) \end{cases} \tag{43}$$

Obviously, the maximum value of ξ should be restricted to $L_S(n) - L_S(n-1)$.

$$L_C(n) = \begin{cases} L_S(0) & \text{for } n = 0 \\ L_S(n\text{-}1) + \xi\left\{\dfrac{t(n,\rho)}{t(n,\rho)+t(n-1,\rho)}\right\} \\ \text{for } t(n,\rho) < t(n-1,\rho) \;\&\; n > 0 \\ L_S(n) - \xi\left\{\dfrac{t(n-1,\rho)}{t(n,\rho)+t(n-1,\rho)}\right\} \\ \text{for } t(n,\rho) \geq t(n-1,\rho) \;\&\; n > 0 \end{cases} \tag{44}$$

The waiting time for the gated service (W_{gated}) can be approximately computed by multiplying this value of $L_c(n)$ with a factor of 1.5 [20], [27]. This factor 1.5 accounts for delay in reporting the packets (i.e., $L_c/2$), and the delay in getting a grant for the reported packets (i.e., L_c). Similarly, the waiting time for the limited service ($W_{limited}$) can be approximately obtained by assuming a relation between W_{gated} and $W_{limited}$ for the Pareto distributed traffic as in the case of Poisson traffic. We can obtain a relation between W_{gated} and $W_{limited}$ using (11) and (12) as:

$$W_{\text{limited}} = \frac{W_{\text{gated}} m(1-\rho) - L_C(1-\rho)(m-\rho)(1-q)}{m(1-\rho-\dfrac{A\lambda P_s}{T_{\max}})} \tag{45}$$

2.3.2 Analytical and simulation results

We evaluate the delay performance of the limited service with RAD and with a Pareto distributed bursty source, Figure 2.11. For this analysis, we assume a maximum queue size of 1 MB, α_{on} as 1.4 and α_{off} as 1.2 [2]. The location parameter for the ON period is chosen as 5 ms. The location parameter for the OFF period is varied according to the network load.

For bursty traffic, the delay is substantially higher than for Poisson traffic. This is because a long burst can saturate the buffer size and increase the delay significantly. The increase in the delay due to bursty traffic is more significant at a heavy load because the probability of occurrence of such a long burst with a high peak rate at a light load is lower. At a heavy load, the analytical values are slightly higher than the simulation results because $L_c(n)$ is determined assuming transitions between only two states. In reality, $L_c(n)$ may be affected by transitions from many states. Assuming a multi-state transition, however, is quite complex and is thus left out in the current study.

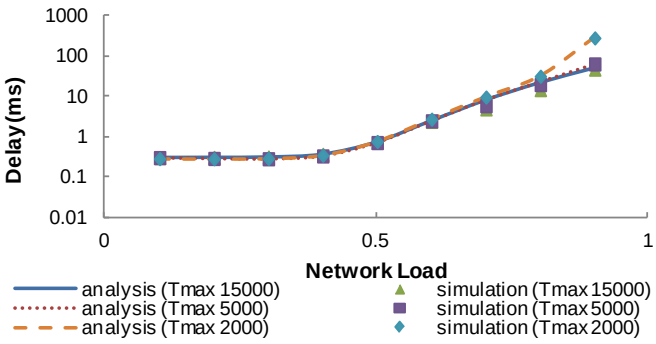

Figure 2.11: Effect of T_{max} on the performance of the limited service with RAD, T_a = 1 μs and Δ = 20 km with Pareto traffic as input

2.4 Conclusions

We analyzed the closed form expressions of the packet delay for EPONs, for the gated and limited service, for Poisson and Pareto distributed traffic, and for long-reach PONs in which the distance between the OLT and the ONUs is significant. We included DBA paradigms, such as RBD, RAD, and MTP. We also verified the accuracy of the analytical models through simulations.

The delay models provide us following major insights:

Short reach vs. Long reach − As the current algorithms adopt a cyclic polling system, the algorithms lead to RTT dependent delays, depraving the performance for long-reach PONs.

RAD vs. RBD − Both the RAD and RBD approaches lead to a similar delay performance for IPACT. These approaches may still make a difference for offline algorithms, and they can be investigated as a future work.

Gated vs. Limited − As T_{max} is reduced, the limited service increases the delay especially at a heavy load. Thus, a maximum value of T_{max} still satisfying the QoS requirements should be adopted.

MTP vs. IPACT − MTP does not improve the delay performance when compared to IPACT. In fact, a larger number of threads in MTP degrade the delay performance more.

Poisson vs. Bursty − When compared with Poisson traffic, bursty traffic increases the delay significantly, especially at a heavy load. Not only the average load, but also the choice of shape and location parameters for the bursty source affects the delay performance.

2.5 References

[1] M. P. McGarry, M. Maier, and M. Reisslein, “Ethernet PON architectures and dynamic bandwidth allocation algorithms,” *IEEE Communications Surveys and Tutorials*, vol. 10, no. 3, pp. 46-60, 2008.

[2] G. Kramer, B. Mukherjee, and G. Pesavento, “IPACT: a dynamic protocol for an Ethernet PON (EPON),” *IEEE Communications Magazine*, vol. 40, no. 2, pp. 74-80, 2002.

[3] A. Dixit, B. Lannoo, G. Das, D. Colle, M. Pickavet, and P. Demeester, “Dynamic bandwidth allocation with SLA awareness for QoS in Ethernet passive optical networks,” *IEEE/OSA Journal of Optical Communications and Networking*, vol. 5, no. 3, pp. 240-253, 2013.

[4] A. Dixit, B. Lannoo, G. Das, D. Colle, M. Pickavet, and P. Demeester, “Adaptive multi-gate polling with void filling for long-reach passive optical networks,” in *IEEE International Conference of Transparent Optical Network (ICTON)*, 2011.

[5] H. Song, B. W. Kim, and B. Mukherjee, “Multi thread polling: a dynamic bandwidth distribution scheme in long-reach PON,” *IEEE Journal of Selected Areas in Communications*, vol. 27, no. 2, pp. 134-142, 2009.

[6] A. Mercian, M. P. McGarry, and M. Reisslein, “Impact of report message scheduling (RMS) in 1G/10G EPON and GPON,” *Optical Switching and Networking*, vol. 12, pp. 1-13, 2014.

[7] A. Helmy, H. Fathallah, and H. Mouftah, "Interleaved polling versus multi-thread polling for bandwidth allocation in long-reach PONs,"

IEEE/OSA Journal of Optical Communications and Networking, vol. 4, no. 3, pp. 210-218, 2012.

[8] Y. Zhu, and M. Ma, "IPACT with grant estimation (IPACT-GE) scheme for Ethernet passive optical networks," *IEEE/OSA Journal of Lightwave Technology*, vol. 26, no. 14, pp. 2055–2063, 2008.

[9] S. Y. Choi, S. Lee, T. J. Lee, M. Y. Chung, and H. Choo, "Double-phase polling algorithm based on partitioned ONU subgroups for high utilization in EPONs," *IEEE/OSA Journal of Optical Communications and Networking*, vol. 1, no. 5, pp. 484-497, 2009.

[10] N. Antunes, C. Fricker, P. Robert, and J. Roberts, "GATE-driven dynamic wavelength and bandwidth allocation for WDM EPONs," in *Global Telecommunications Conference (GLOBECOM)*, 2010.

[11] B. Skubic, J. Chen, J. Ahmed, B. Chen, L. Wosinska, and B. Mukherjee, "Dynamic bandwidth allocation for long-reach PON: overcoming performance degradation," *IEEE Communications Magazine*, vol. 48, no. 11, pp. 100-108, 2010.

[12] B. Kantarci and H. T. Mouftah, "Periodic GATE optimization (PGO): a new service scheme for long-reach passive optical networks," *IEEE Systems Journal*, vol. 4, no. 4, pp. 440–448, 2010.

[13] B. Kantarci, and H. T. Mouftah, "Two-stage report generation in long-reach EPON for enhanced delay performance," *Computer Communications*, vol. 36, no. 14, pp. 1570–1580, 2013.

[14] Y. Luo and N. Ansari, "Limited sharing with traffic prediction for dynamic bandwidth allocation and QoS provisioning over Ethernet passive optical networks," *Journal of Optical Networking*, vol. 4, no. 9, pp. 561–572, 2005.

[15] M. P. McGarry, M. Reisslein, F. Aurzada, and M. Scheutzow, "Shortest propagation delay (SPD) first scheduling for EPONs with heterogeneous propagation delays," *IEEE Journal of Selected Areas in Communications*, vol. 28, no. 6, pp. 849-862, 2010.

[16] C. Assi, M. Maier, and A. Shami, "Toward quality of service protection in Ethernet passive optical networks: challenges and solutions," *IEEE Network*, vol. 21, no. 5, pp. 12-19, 2007.

[17] N. A. M. Radzi, N. M. Din, M. H. A. Mansoori, I. S. Mustafa, and S. K. Sadon, "Intelligent dynamic bandwidth allocation algorithm in upstream EPONs," *IEEE/OSA Journal of Optical Communications and Networking*, vol. 2, no.3, pp. 148 – 158, 2010.

[18] C.G Park, D.H. Han, and K.W. Rim, "Packet delay analysis of symmetric gated polling system for DBA scheme in an EPON," *Telecommunication Systems*, vol. 30, no. 1-3, pp. 13-34, 2005.

[19] S. Bhatia, D. Garbuzov, and R. Bartos, "Analysis of the gated IPACT scheme for EPONs," in *IEEE International Conference on Communications (ICC)*, 2006.

[20] B. Lannoo, L. Verslegers, D. Colle, M. Pickavet, M. Gagnaire, and P. Demeester, "Analytical model for the IPACT dynamic bandwidth allocation algorithm for EPONs," *Journal of Optical Networking*, vol. 6, no. 6, pp. 667-688, 2007.

[21] F. Aurzada, M. Scheutzow, M. Herzog, M. Maier, and M. Reisslein, "Delay analysis of Ethernet passive optical networks with gated service," *Journal of Optical Networking*, vol. 7, no. 1, pp. 25-41, 2008.

[22] S. Bharati, and P. Saengudomlert, "Analysis of mean packet delay for dynamic bandwidth allocation algorithms in EPONs," *IEEE/OSA Journal of Lightwave Technology*, vol. 28, no. 23, pp. 3454-3462, 2010.

[23] J. Garcia-Reinoso, J. A. Hernández, I. Seoane, and I. Vidal, "On the effect of sudden data bursts in the upstream channel of Ethernet PONs employing IPACT under the gated-service discipline," *Optical Switching and Networking*, vol. 13, pp. 94-102, 2014.

[24] D. P. Bertsekas, R. G. Gallager, and P. Humblet, Data networks, Prentice-Hall International, 1992.

[25] W. Willinger, M. Taqqu, R. Sherman, and D. Wilson, "Self-similarity through high variability: statistical analysis of Ethernet LAN traffic at the source level," in *ACM SIGCOMM*, 1995.

[26] M. T. Ngo, A. Gravey, and D. Bhadauria, "A mean value analysis approach for evaluating the performance of EPON with gated IPACT," in *Optical Network Design and Modeling (ONDM)*, 2008.

[27] A. Helmy, H. Fathallah, and H. Mouftah, "Interleaved polling versus multi-thread polling for bandwidth allocation in long-reach PONs," *IEEE/OSA Journal of Optical Communications and Networking*, vol. 4, no. 3, pp. 210-218, 2012.

3

Synergized-Adaptive Multi-GATE Polling with Void filling: Overcoming Performance Degradation in LR-PONs

Great dreams of great dreamers are always transcended.

−A. P. J. Abdul Kalam

As discussed in the last chapter, a long reach deteriorates the QoS performance of the PONs. In this chapter, we propose a novel algorithm to overcome this performance degradation.

Abhishek Dixit, Bart Lannoo, Didier Colle, Mario Pickavet, and Piet Demeester.

Submitted to IEEE Journal of Optical Communications and Networking, 2014.

Abstract: Several dynamic bandwidth allocation (DBA) algorithms have been proposed for long reach-passive optical networks (LR-PONs). The gains in current protocols, however, are incremental and limited to a specific range of loads. Using an analytical framework, we first examine the main sources of performance degradation specific to LR-PONs. From this, we conclude that there is a large scope for improvement in the performance by using an optimal cycle length, which is not influenced by reach, and which polls users according to their reported load while providing opportunities for pre-granting bandwidth at the ONUs. The fraction of bandwidth that is pre-granted should be decreased with the load. To tailor these optimal design concepts in a DBA algorithm, we propose Synergized Adaptive Multi-GATE polling with Void-filling (S-AMGAV), which reduces both the delay bound and packet loss rate by at least 50% when compared to the state-of-the-art DBAs like interleaved polling with adaptive cycle time (IPACT), IPACT with grant estimation (IPACT-GE), multi-thread polling (MTP), double phase polling (DPP), gate driven (GD) and AMGAV. S-AMGAV also maintains simplicity of the protocol while removing bandwidth inefficiencies prevailing in the existing protocols. We verify the usefulness of the algorithm through both analytical modeling and simulations.

3.1 Introduction

Passive optical networks (PONs) are an important optical access network technology, currently standardized in time division multiplexing (TDM) PONs like gigabit PON (GPON) or Ethernet PON (EPON). Today, PON technology is being evolved to support longer reaches, i.e., increasing the distance between the optical line terminal (OLT, i.e., the central office equipment) and the optical network units (ONUs, i.e., the customers' premises equipment). Such a PON solution with an increased reach, typically from 20 km to 100 km, is referred to as long reach-PON (LR-PON) [1] or SuperPON. It simplifies a telecom network by replacing multiple active network sites (i.e., central offices) by a single central access node, reducing the operational cost of the network [2]. It also covers more users, efficiently sharing fiber, components and the rack space of the OLT.

Several LR-PON solutions have been proposed [3]-[5] in the literature. Typically, they exploit the increased optical capacity delivered by higher line rates (e.g., 10 or 40 Gb/s) in a TDM domain, or by using wavelength division multiplexing (WDM) technology or by combining both the approaches. For example, an actively considered architecture is a hybrid WDM/TDM PON [5], in which an arrayed waveguide grating (AWG) selects one pair of wavelengths for a power splitter (PS), providing a logical connectivity between a group of the ONUs and the OLT similar to a TDM PON, Figure 3.1. In this paper, we

consider a TDM based LR-PON.

Together with architectural challenges like eliciting a higher power budget, an LR-PON requires a dynamic bandwidth allocation (DBA) algorithm that mandates quality of service (QoS) requirements. The LR-PON can employ algorithms proposed for the state-of-the-art TDM-PON architectures. These DBAs, however, degrade the delay performance as the reach increases and thus are not suitable for LR-PONs (section 3.2). To counter the performance deterioration, several DBA algorithms have been proposed [6]-[31], but they do not completely alleviate the problem (section 3.5).

We examined through analytical modeling the drawbacks in the existing algorithms (section 3.3). Based on this knowledge, we propose a novel DBA algorithm for LR-PONs (section 3.4), referred to as Synergized Adaptive Multi-GATE polling with Void-filling (S-AMGAV). The proposed algorithm can be applied to any TDM based LR-PON. However, for illustration of specific examples, we apply an EPON based protocol.

For the first time, S-AMGAV optimally combines **load adaptive multi-thread polling** with **load aware pre-grant sizing** (referred to as void filling). This adaptive multi-thread polling uses an adaptive number of parallel threads (GATEs) which polls ONUs independent of their reach. On the other hand, load aware pre-grant sizing minimizes the extra delay imposed by the exchange of control messages and preempts packets transmission without degrading the delay performance at a heavy load. Note that the simple (load unaware) pre-grant mechanisms, as exist in current literature, could improve the delay at a light load only at the expense of degrading the delay performance at a heavy load. Furthermore, the two used methodologies within S-AMGAV are synergized through analytical modeling. Compared to the current state-of-the-art algorithms, these are significant extensions. We outline these and other major novelties in S-AMGAV in section 3.5. In [6], we introduced AMGAV which used the same basic approaches, but still in a non-synergized way. In this paper, however, we use analytical insights, derived in section 3.3, to optimize the synergy between the two proposed approaches. Besides, we perform an extensive simulation study of the other current state-of-the art algorithms.

Following are our major contributions in this paper:

- We investigate the main degradation effects brought in by long-reach (section 3.2).
- We analytically compute the value of the cycle length (time between two successive polling of an ONU) that minimizes the overall delay (section 3.3).
- We propose S-AMGAV, which can implement the optimal design traits discussed in section 3.3. We complement S-AMGAV with a novel

bandwidth-reporting (BR) scheme and a bandwidth allocation (grant-sizing) scheme (section 3.4).

- We give an overview of the previous work done and outline the main novelties of S-AMGAV (section 3.5).
- We perform an extensive analytical and simulation study of the algorithm, studying the effect of different reaches (20 and 100 km), bandwidth capacities (1 Gb/s and 10 Gb/s), and traffic types (Poisson and self-similar) (section 3.6).
- The simulations results of S-AMGAV are benchmarked with the results of diverse algorithms like interleaved polling with adaptive cycle time (IPACT) [7], IPACT-grant estimation (IPACT-GE) [8], double phase polling (DPP) [9], multi-thread polling (MTP) [10], GATE-driven (GD) [11], newly-arrived (NA) + [12], and AMGAV [6]. Through extensive simulations, we show that S-AMGAV reduces the packet delay for a whole range of network loads while significantly reducing the packet loss rate (PLR) (section 3.6).

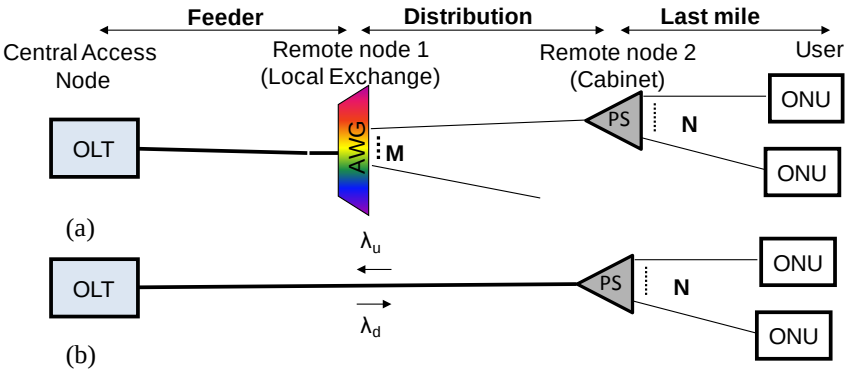

Figure 3.1: (a) Typical hybrid WDM/TDM PON (b) logical connectivity between a group of ONUs and the OLT

3.2 Long reach PON: degradation effects

EPON is a tree-structured PON, in which an OLT broadcasts data to every ONU in the downstream direction. In the upstream direction, the DBA algorithms are used for scheduling data transmissions from the ONUs to the OLT to avoid collisions between the users' data. The ONU sends REPORT messages carrying bandwidth request information based on its queue size, and the OLT sends back a GATE message to the ONU informing allocated bandwidth (Figure 3.2). GATE and REPORT messages are 64 byte Ethernet control messages

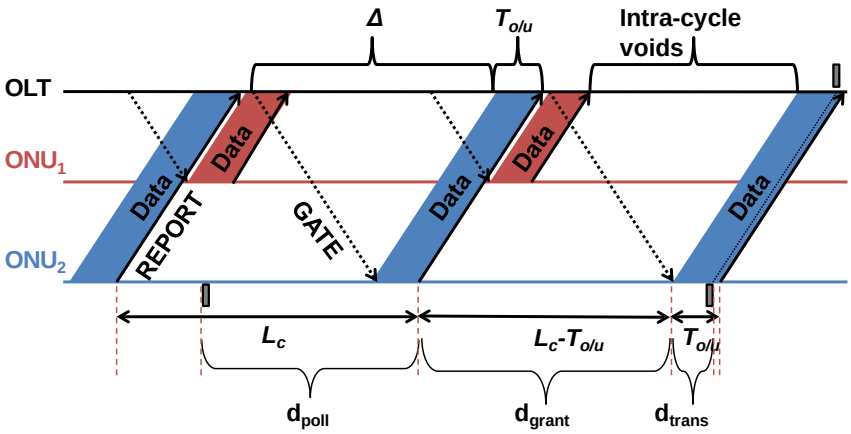

Figure 3.2: REPORT and GATE exchange in PON (T_r assumed as zero for clarity)

specified in Multi-Point Control Protocol (MPCP).

Several DBA algorithms have been proposed [33] with IPACT [7] as the most important example. Current DBA algorithms lead to several problems when they are applied to an LR-PON. Current DBA algorithms follow a GATE-after-REPORT (GAR) scheduling, which enlarges the average cycle length (L_c) to be at least equal to the round trip time (RTT) of the farthest ONU, i.e. *Max(RTT)* of the PON, denoted as Δ in the remainder of this paper. This increased L_c increases delay and the length of voids (idle periods in upstream). Moreover, L_c is governed by Δ until a very heavy load, degrading the load-adaptivity of the DBA algorithms.

We discuss these problems more concretely through analytical formulations. These analytical formulations are to illustrate the main problem in current algorithms and not to deal with every minor intricacy. Thus, we refrain from an in-depth queuing analysis of the DBA algorithms. For an exhaustive study of the analytical models of these DBA algorithms, we refer the interested readers to [34]-[37].

We will first derive the closed form expression of L_c and then of the queuing delay. Our analysis will show that L_C, and consecutively, the delay and the voids increase with Δ. For the simplicity of the analysis, we assume that the variance of the investigated variables, such as L_c, is zero. In addition, we assume a gated window-sizing approach, which grants whatever is requested and leads to optimal delay performance [34] for current algorithms.

Table 3.A lists frequently used symbols, which are further explained in the text.

Table 3.A: List of important symbols and their meaning

Symbols	*Meaning*
N	Number of users
L_c	Cycle length
λ	Arrival rate
μ	Service rate
Λ	Normalized load
Λ_T	Threshold load
T_u	Average time to transmit data
T_o	Average time to transmit overhead
T_v	Average time for which voids are created
T_n	Average time to transmit newly arrived packets
$T_{o/u}$	Average time of transmission of one ONU
T_g	Guard time between two ONUs slot
T_r	Time to transmit one Report message
E	Efficiency of void filling
K	Fraction of packets transmitted through void filling
K_{opt}	Optimal fraction of K
K_{max}	Maximum fraction of K for system stability

Cycle Length – L_c is composed of two components: a time T_u for data transmission, and a time T_o for overheads. Assuming a steady state,

$$L_c = \overline{T_u} + \overline{T_o} = \overbrace{\frac{\lambda L_c}{\mu}}^{Data} + \overbrace{N\left(T_g + T_r\right) + \overline{T_v}}^{Overheads} \qquad (1)$$

where λ is the network traffic arrival rate, μ is the upstream data rate, N is the number of ONUs, T_g guard time between two ONU's slots, T_r is the time slot of one REPORT message, and T_v is the time of idle periods or voids.

First, we assume that T_v is zero, and we refer to this L_c as L_{ci}. By rearranging (1), we can compute L_{ci} as

$$L_{ci} = \frac{N\left(T_g + T_r\right)}{1 - \Lambda} \qquad (2)$$

To simplify notations, we denote the network load λ/μ by Λ. Equation (2) computes L_{ci}, which is L_c when bandwidth is not allocated in cyclic rounds of Δ, that is, in an ideal case, leading to a minimum possible L_c. This could also be considered for the scenario when the propagation delays between the OLT and the ONUs are zero. In PONs, because the algorithms follow a GAR scheduling and there is a finite distance between the OLT and the ONUs, L_c is at least the

sum of Δ, T_r, the time to send one GATE message (same as T_r), and the transmission slot of one ONU ($T_{o/u}$), Figure 3.2. In fact, the value of L_c remains as such until the load increases beyond a threshold referred to as Λ_T. As the load increases beyond Λ_T, L_c approximately approaches L_{ci}. Hence,

$$L_c = \begin{cases} \Delta + \overline{T_{o/u}} + 2T_r\,, & \Lambda \le \Lambda_T \\ L_{ci}\,, & \Lambda > \Lambda_T \end{cases} \tag{3}$$

Note that eq. (3) is an approximation as already pointed out in the last chapter. We can compute $T_{o/u}$ assuming that in a steady state $T_{o/u}$ remains the same across the cycles, and the ONUs, on average, are uniformly loaded

$$\Lambda = \frac{N\overline{T_{o/u}}}{L_c} = \frac{N\overline{T_{o/u}}}{\left(\Delta + \overline{T_{o/u}} + 2T_r\right)}, \quad \Lambda \le \Lambda_T \tag{4}$$

Using (2), (3) and (4), L_c can be defined as

$$L_c = \begin{cases} \dfrac{N(\Delta + 2T_r)}{N - \Lambda}, & \Lambda \le \Lambda_T \\ \dfrac{N(T_g + T_r)}{1 - \Lambda}, & \Lambda > \Lambda_T \end{cases} \tag{5}$$

Clearly, L_c depends on Δ until a value of load Λ_T, which is the load at which the equality given in (6) holds. By solving (6), Λ_T can be formulated as in (7). For a PON of reach 100 km, N as 64, T_g as 1 µs, T_r as 0.576 µs (64 Bytes + 8 Bytes preamble per 1 Gb/s), Λ_T is as high as 0.9. *This shows that L_c is primarily influenced by the reach of the PON until a heavy load, and does not vary adaptively.* Moreover, L_c increases proportionally to Δ and increases intra-cycle voids (T_v, Figure 3.2) as in (8). Equation (8) can be computed by rearranging (1). The results (both simulations and analytical) are also presented in Figure 3.3.

$$\frac{N(\Delta + 2T_r)}{N - \Lambda_T} = \frac{N(Tg + Tr)}{1 - \Lambda_T} \tag{6}$$

$$\Lambda_T = \frac{\Delta + 2T_r - N(Tg + Tr)}{\Delta + T_r - Tg} \tag{7}$$

$$\overline{T_v} = L_c(1 - \Lambda) - N(T_g + T_r) \tag{8}$$

To our best knowledge, the intra-cycle voids formation and their possible utilization have not been addressed in the literature. These voids are formed mainly due to a light load, as the channel utilization can never exceed the load, and thus voids proportional to the remaining bandwidth capacity (channel capacity – load) will be formed. Moreover, this gives us an opportunity to use this remaining bandwidth more cleverly − for example, by issuing more GATE messages to an ONU, so that the queue status of the ONUs can be obtained more frequently and by providing the opportunities to the ONU to transmit newly arrived packets. Some schemes that order the polling of ONUs [13] or propose the transmission of a REPORT message before the DATA message [6], [35] have been proposed, but they do not break cyclic bandwidth allocation and their effect particularly for online algorithms is negligibly small [38]. Moreover, they require minor changes in the scheduling order or in the way a REPORT is appended and can always be used in conjunction with the other algorithms.

Queuing delay − The queuing delay (*d*, *cf.* Figure 3.2 for components of delay) of a packet can be formulated as

$$d = d_{poll} + d_{grant} + d_{trans} \tag{9}$$

where

d_{poll}: polling delay, time between a packet arrival at an ONU and the next REPORT sent by that ONU (i.e., half of the maximum (L_c) and the minimum value (*0*)). On average,

$$\overline{d_{poll}} = \frac{L_c}{2} \tag{10}$$

d_{grant}: grant delay, time interval between the ONU's REPORT for a transmission window for a packet till the GATE from the OLT for that packet is received. Current algorithms also follow an allocation-after-demand (AAD) grant sizing, that is, the bandwidth is only allocated after it is reported. From Figure 3.2, we can obtain d_{grant} as

$$\overline{d_{grant}} = L_c - T_{o/u} \tag{11}$$

Substituting the value of $T_{o/u}$ from (4), we obtain,

$$\overline{d_{grant}} = L_c - \frac{\Lambda}{N} L_c \tag{12}$$

An approach to reduce d_{grant} is by pre-granting bandwidths using traffic prediction algorithms [8]. While pre-granting reduces the delay at a light load, they lead to even increased delay at a heavy load due to errors in predicting traffic. Thus, we present load-dependent pre-granting in this paper, which will be combined with a high polling ratio to result in an optimal delay performance. The optimum is achieved through analytical insights derived in the next section.

d_{trans}: transmission delay, time between the arrival of the appropriate GATE at the ONU and the packet transmission. On average d_{trans} is half the transmission slot of one ONU (Figure 3.2), i.e., $T_{o/u}/2$.

$$\overline{d_{trans}} = \frac{\overline{T_{o/u}}}{2} = \frac{\Lambda}{2N} L_c \tag{13}$$

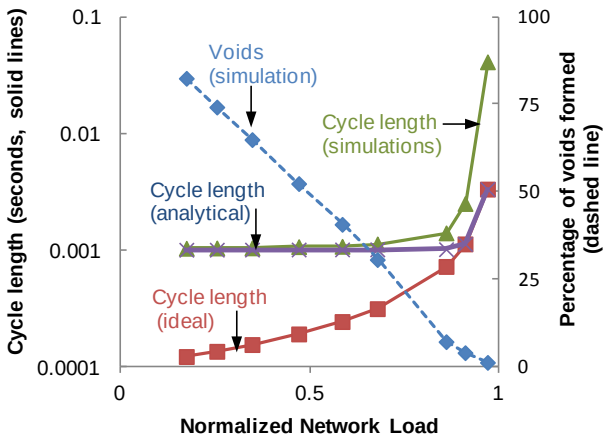

Figure 3.3: Performance of current algorithms in PON with 100 km reach, N = 64, T_g = 1 µs, T_r = 0.576 µs, Poisson distributed traffic, with packet sizes varying exponentially between 64 B and 1518 B

The total average delay can be computed as

$$\begin{aligned}\overline{d} &= \overline{d_{poll}} + \overline{d_{grant}} + \overline{d_{trans}} \\ &= \frac{1}{2}L_c + L_c - \frac{\Lambda}{2N}L_c = \frac{L_c}{2}(3 - \frac{\Lambda}{N})\end{aligned} \tag{14}$$

The delay will increase with Δ, due to the dependence of L_c on Δ (cf. (5)), explaining the poor performance of current algorithms for LR-PONs. The effects of these increased delays have also restriction on delivering QoS. The ITU- T Recommendation G.114 specified the maximum one-way transmission delay in an access network (digital local exchange) for voice traffic as 1.5 ms for an analog subscriber line – analog junction and 0.825 ms for a digital subscriber line – digital junction [39]. However, for a PON with reach of 100 km, the average queuing delay even at the lightest load is greater than 1.5 ms (15), which clearly will be a problem for delivering interactive voice or video services.

For Δ = 1ms (i.e., reach of 100 km) and Λ = 0, eq. (14) reduces to:

$$\overline{d} = \frac{(\Delta + 2T_r)}{2}\left(\frac{3N - \Lambda}{N - \Lambda}\right) > 1.5ms \tag{15}$$

3.3 Overcoming delay degradation

In the last section, we showed that the performance degrades due to an increase in both d_{poll} and d_{grant} if Δ increases. In this section, we examine how we can tackle these components of delay by optimally selecting cycle length.

Equation (2) provides the minimum value of L_c. This value of L_c minimizes d_{poll} but does not deal with d_{grant}, which continues to be governed by Δ. Hence, a more appropriate value of L_c should be adopted which minimizes both d_{poll} and d_{grant}.

An approach to minimize d_{grant} is to transmit packets in the same cycle in which they arrive instead of first reporting them. This breaks the usual delay of one Δ. Of course, because the packets are granted before they are reported, this requires a bandwidth allocation based on credits (*pre-grants*), where the credits can be assumed constant, proportional to the last allocated bandwidth, or based on traffic-prediction. This pre-grant sizing also introduces inefficiencies in the cycle because the ONUs may not have sufficient data to transmit and thus the allocated slot may go waste.

Let us assume a cycle length given by (16), where now the cycle length is

larger than (2) because of T_n. This will thus create voids (equal to T_n) that we distribute among the ONUs to transmit the newly arrived packets; we refer to this approach as void filling.

$$L_c = T_u + T_n + N(T_g + T_r) \tag{16}$$

T_u is used to transmit reported packets and T_n is used to transmit newly arrived packets. The length of T_n that should be adopted depends upon the optimization of the delay. Let us assume that the fraction of packets transmitted through void filling is K. Then, T_n will be a factor 1/E larger than the ideal value of $\Lambda K L_C$, where E accounts for efficiency in the void filling. Based on this, L_c can be computed as:

$$L_c = \Lambda(1-K)L_c + \frac{\Lambda K L_c}{E} + N(T_g + T_r) \tag{17}$$

Rearranging (17), we obtain

$$L_c = \frac{N(T_g + T_r)}{1-\Lambda\left(1-K\left(1-\frac{1}{E}\right)\right)} \tag{18}$$

As $\Lambda(1-K(1-\frac{1}{E})) \to 1$, we have $L_c \to \infty$. If $\Lambda(1-K(1-\frac{1}{E})) > 1$, the server clearly cannot keep up with the arrival rate and the queue lengths increases without bound. Thus, for stability, we have

$$\Lambda(1-K(1-\frac{1}{E})) < 1 \tag{19}$$

From this, we can compute the maximum value of K, that is, K_{max} as:

$$K_{\max} \le Min\left[\frac{(1-\Lambda)}{\Lambda}\frac{E}{(1-E)},1\right] \tag{20}$$

With void filling, we give the overall delay in (21). d_{poll} and d_{trans} are as

calculated before, whereas d_{grant} can be considered as the sum of two components. The first component accounts for the delay of packets that first have to be reported, whose delays are still given by Δ or L_c, whichever is greater. The second component accounts for the packets transmitted in the same cycle, whose delays are given by half of the L_c.

$$d(K) = \frac{L_c}{2} + L_g(1-K) + K\frac{L_c}{2} - \frac{\Lambda}{N}\frac{L_c}{2} \qquad (21)$$

where

$$L_g = \begin{cases} \Delta \text{ for } L_c \le \Delta \\ L_c \text{ for } L_c > \Delta \end{cases}$$

We define K_{opt} as the optimal value of K, which lies in the range [0, K_{max}] and minimizes the overall delay.

$$K_{opt} \in [0, K_{\max}] : d(K_{opt}) = d_{\min} \qquad (22)$$

We compute K_{opt} analytical and depict it in Figure 3.4. K_{opt} depends upon both load and E. If E is 1, that means, new packet arrivals can always be predicted without errors, and thus they should always be granted beforehand. Moreover, as E decreases, K_{opt} decreases. K_{opt} also decreases with the load, proving that *for void filling to be efficient it should be load dependent*. This can be attributed to the fact that at light loads, channel utilization is low, and thus, even large overheads created in the process of pre-granting ONUs does not degrade the performance. As the load increases, however, the same order of wastages may deteriorate the performance.

The delay for these K_{opt} is given in Figure 3.5. The results represent a considerable improvement compared to the one achieved in current polling algorithms. The delay becomes 1 ms close to the network load of 1 and always stays below 1.5 ms. Thus, we find that the network performance can be significantly improved by choosing L_c appropriately in combination with void filling to minimize both d_{poll} and d_{grant}.

For the results, we vary E from 0.5 to 1. A value of E = 0.5 is assumed to show that there are gains even in the case of an unlikely low value of E. The realistic value of E will depend upon traffic profile: for constant bit-rate service, it will be 1, whereas for self-similar traffic, it will be limited between 0.8 and 1. For self-similar traffic, [41] and [42] show that the traffic-prediction error can be limited to 2% and 5% respectively, i.e., limited to a value of E between 0.98 and

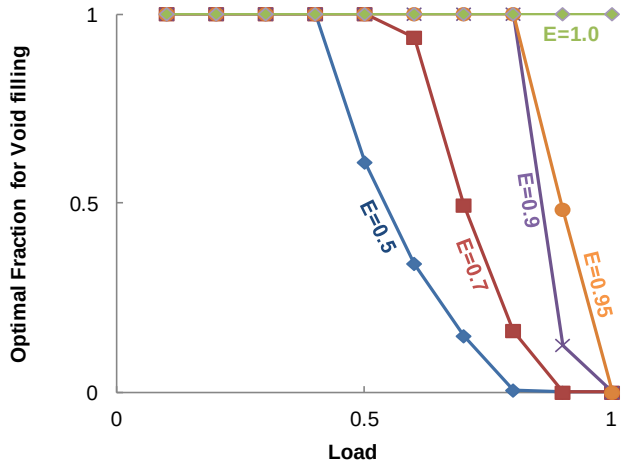

Figure 3.4: Optimal fraction for void filling (K_{opt}) with Δ =100 km, N = 64, T_g = 1 µs, T_r = 0.576 µs

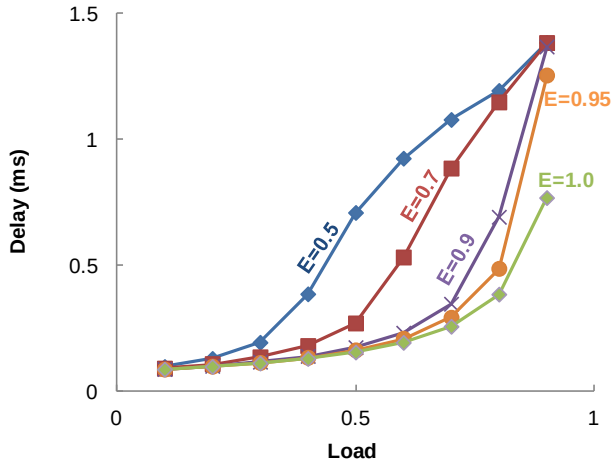

Figure 3.5: Delay (ms) Vs Load with Δ =100 km, N = 64, T_g = 1 µs, T_r = 0.576 µs

0.95. However, it can be argued that using a complex traffic-prediction model will increase the complexity of the algorithm. Thus, a more simple approach like a constant-credit (extra bandwidth is allocated uniformly to all ONUs) or a linear-credit (extra bandwidth is allocated in proportion to the instantaneous load of the ONUs) [7] scheme can be adopted, which will then decrease E. Moreover, E can drop not just because of errors in traffic prediction, but also because the bandwidths from the ONUs can be transmitted only in the granularity of the size of Ethernet packets, and thus unused slot remainders (USR) [39] may occur.

3.4 Synergized-adaptive multi-gate polling with void filling

In this section, first we present the basic idea of S-AMGAV (section 3.4.1), which is proposed to implement the design traits outlined in section 3.3. Then, we present the bandwidth-reporting (BR) scheme (section 3.4.2), and the grant-sizing scheme (section 3.4.3).

3.4.1 Basic idea

S-AMGAV has three prominent features:

- *It chooses a polling time that optimizes both d_{poll} and d_{grant}, and which is no longer enlarged by Δ.*
- *It uses void filling, which helps to reduce the packet delays and improves the channel utilization.*
- *The complexity of the algorithm is minimal.*

Polling time: S-AMGAV chooses a fixed length L_m after which all the execution steps repeat (Figure 3.6). L_m is referred to as execution cycle (*EC*), and can be chosen according to the QoS requirements of high-priority traffic. For example, if L_m is chosen as 2 ms, it can bound the average delay for high-priority traffic within 1 ms [39]. L_m also restricts the maximum cycle length, which avoids bandwidth hogging by malicious users and ensures bandwidth access to an ONU within a definite time.

At the start of every L_m, the OLT will compute the number of GATE messages for an ONU according to the load of all ONUs. Based on the number of GATE messages, the OLT will divide L_m into smaller cycles. For example, in Figure 3.6, the OLT decides three cycles. At the start of every cycle, the OLT computes the bandwidth allocation for every ONU. The GATE messages are issued for each ONU on the latest known buffer occupancy and not explicitly for each received REPORT message. This is in major contrast with the currently proposed algorithms in which an OLT generates a GATE explicitly for each REPORT received. In S-AMGAV, the OLT issues GATEs based on its current knowledge of the ONU buffer occupancy and does not wait for any past communication between the OLT and an ONU to complete.

The number of GATE messages N_g can be determined as in (23), where L_c is determined according to (18), with $K = K_{opt}$. Note that as K_{opt} minimizes the overall delay, now L_c is optimal and independent of Δ. For determining K_{opt}, the OLT should know E and Λ, which can be determined as in (24) and (25) respectively.

$$N_g = \left\lfloor \frac{L_m}{L_c} \right\rfloor \tag{23}$$

$$E = \frac{\sum_{i=1}^{N} TP_i}{\sum_{i=1}^{N} GP_i} \tag{24}$$

$$\Lambda = \frac{\sum_{i=1}^{N} RV_i u[RV_i] + \sum_{i=1}^{N} TP_i}{L_c} \tag{25}$$

where GP_i is the pre-granted window (in time) of an ONU i in the last complete cycle, TP_i is the pre-transmitted window (in time) of an ONU i in the last complete cycle, u[RV_i] is the unit-step function of request variable (RV, in time) of an ONU i in the current cycle. The meaning of RV is discussed in detail in section 3.4.2.

In the formulations of these equations, K_{opt} depends upon E and E is not known in the first cycle. Hence, we assume an initial value of E as 0.9. Nonetheless, to our advantages, the choice of the initial value of E does not affect the final time-averaged value of E (Figure 3.7), and consequently, any value of E can be assumed for the first cycle.

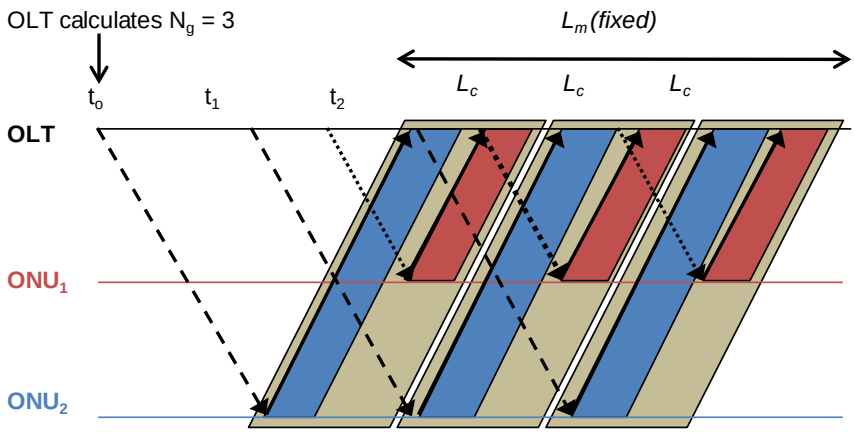

Figure 3.6: An example of S-AMGAV with N_g = 3

We depict the number of GATE messages computed in (23) in Figure 3.8. In general, N_g decreases with the load as frequent polling at a heavy load will minimize channel utilization.

Void filling: To reduce d_{grant}, S-AMGAV distributes voids among ONUs, allowing new packet arrivals at the ONUs to get through. Because of a pre-determined cycle length, and known ONUs' requests, S-AMGAV can track the voids quite easily as:

$$T_v = \frac{L_m}{N_g} - N(T_g + T_r) - \sum_{i=1}^{N} RV_i u[RV_i] \qquad (26)$$

The prediction of voids will be extremely complex in current algorithms with variable cycle lengths. The voids in S-AMGAV can be filled using simple grant sizing schemes, such as constant credit or linear credit schemes, or by using the schemes that are more complex, such as employing max-min fair principles [43] or traffic-prediction algorithms. In this paper, we use the linear credit scheme, which allocates extra bandwidth in proportion to the load of the ONUs.

Complexity: Because of a fixed *EC*, S-AMGAV does not suffer from the complexities of GATE convergence [6]. The problem in scheduling multiple parallel GATE messages has been an issue in MTP [10]. As already mentioned, the fixed cycles within an *EC*, also allows easy void filling.

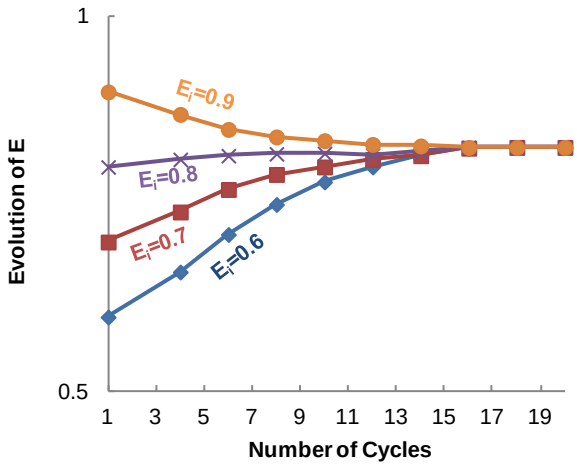

Figure 3.7: Evolution of E with the choice of E_i and the number of cycles, with Δ =100 km, N = 64, T_g = 1 µs, T_r = 0.576 µs, Load = 0.8, Self-similar traffic

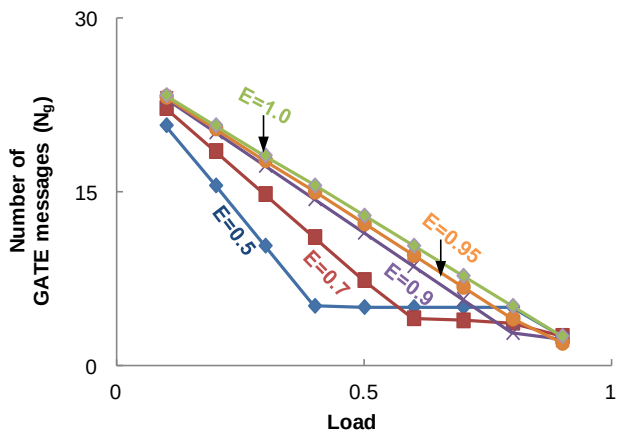

Figure 3.8: Number of GATE messages vs. Load with Δ =100 km, N = 64, T_g = 1 µs, T_r = 0.576 µs

Other than the novel features outlined in the above sections, S-AMGAV also transmits REPORT before data and polls the ONUs in the ascending order of their propagation distances [13].

We show the flowchart of S-AMGAV in Figure 3.9. First, an L_m is chosen. At the start of an ith L_m, the OLT computes N_g as in (23). Then, at the start of every cycle, the grant-sizing (bandwidth allocation) and GATE scheduling time for every ONU are computed. The grant sizing steps are explained in section 3.4.3. The GATE messages are scheduled to the ONUs in an interleaved manner. This step repeats for N_g cycles.

3.4.2 Bandwidth reporting scheme

The bandwidth can be over-reported in the multi-GATE algorithms, e.g., MTP and S-AMGAV when the current queue size reporting mechanism is adopted. An OLT may issue a new GATE before it receives the REPORT for the previous GATE message, which results in an ONU to report the same packets in each REPORT message, leading to the problem of over-reporting. Thus, we propose a new BR scheme, which reports only newly arrived (NA) frames instead of the queue size. Each REPORT message reports the untransmitted bytes (B_{ut}) in the present cycle and the total number of NA bytes.

Equation (27) further illustrates it:

$$R_i = B_{ut} + NA \tag{27}$$

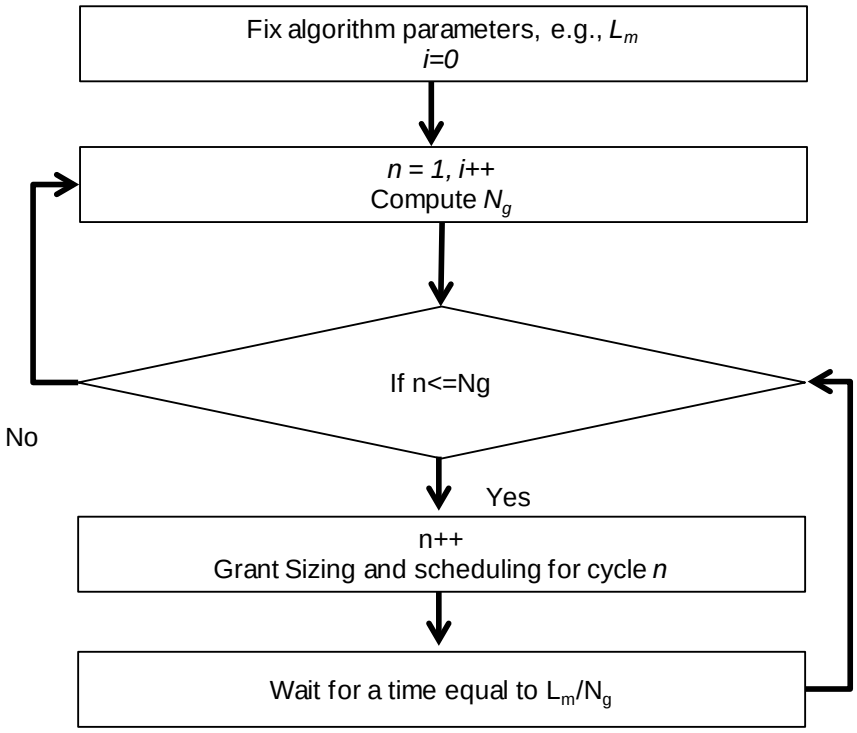

Figure 3.9: Flowchart of S-AMGAV

where:

R_i is the REPORT of an ONU i

B_{ut} are the untransmitted bytes, i.e., the difference between the granted and the transmitted bytes.

NA represents the bytes that have arrived between the time of the last REPORT transmission and the present REPORT transmission.

On the other hand, the OLT maintains a request variable (*RV*) for each REPORT of an ONU. The OLT increments *RV* by the number of requested bytes in each REPORT message and decrements it by the number of granted bytes in each GATE message.

Thus, when a REPORT arrives, RV_i is updated as:

$$RV_i = RV_i + R_i \tag{28}$$

Similarly, when a GATE is issued, RV_i is updated as:

$$RV_i = RV_i - G_i \tag{29}$$

where G_i is the grant for an ONU i. This will help the OLT to keep track of all reported bytes, and ungranted bytes will not have to be reported again. The RVs can also become negative which simply means that the ONUs are pre-granted. This simplistic approach will very easily implement inter-GATE (or inter-thread) scheduling which otherwise scales in complexity with the number of GATE messages. The possible drawback with this reporting scheme is that if the REPORT message is lost the requested bytes cannot be accounted for, as every time newly arrived bytes are requested instead of the queue size at the ONU. However, as the OLT expects a REPORT message after issuing a GATE to an ONU, it will be able to detect a lost REPORT and can signal the ONU to REPORT the same bandwidth again.

3.4.3 Grant-sizing

When $\sum_{i=1}^{N} RV_i u[RV_i] \le L_C$, we distribute excess bandwidth to the ONUs in ratio of their requests. This will give extra bandwidths to the ONUs, which reduces d_{grant}.

However, when $\sum_{i=1}^{N} RV_i u[RV_i] > L_C$, then the request of every ONU cannot be honored, and we have to optimally decide the grant size of the ONUs. For this case, we adopt the approach outlined in [44]. When the DBA process starts, the OLT calculates the threshold window (T_W) which is the cycle length (in bytes) divided by the number of ONUs. The ONUs for which the REPORT is less than T_W are called the satisfiable ONUs, and the ONUs with a REPORT greater than T_W are called the unsatisfiable ONUs. The OLT starts by granting ONUs in the ascending order of their REPORTs. Thus, it grants first the satisfiable ONUs and keeps updating the T_W by adding the unused bandwidth from each satisfiable ONU to T_w. When the OLT encounters first unsatisfiable ONUs, it grants the remaining ONUs a window size of T_W.

3.5 Literature comparison and overview

We first compare S-AMGAV with the related research and then describe other important work in the field.

3.5.1 Comparison:

We compare the novelties in S-AMGAV to current algorithms:

Fixed Cycle length within Lm - The notion of fixed cycle length is presented in [45], [46]. As the traffic is highly bursty, always-fixed cycle length is not ideal for channel utilization. In [47], we show that the channel utilization in these algorithms is limited to 85%. S-AMGAV has a fixed cycle length for a given period (L_m); however, across periods, the cycle length is adjusted to the load. This enables S-AMGAV both simplicity and load adaptivity, and it achieves a channel utilization of up to 96% [6].

Multiple parallel transmission grants per ONU - The notion of multiple parallel transmission grants per ONU is proposed for the first time in MTP [10]. However, MTP suffers from several notable problems [6], [48]. One of the problems is that since the length of a cycle depends upon the load, two cycles may begin to converge, and thus MTP loses all its advantages. To mitigate this, the bandwidths in threads are to be moved optimally and continuously, adding complexity to the algorithm. This motivates us to make the cycle length fixed to overcome the problem of thread spread and convergence. In S-AMGAV, the two parallel processes for the ONU are always separated by the length of a cycle, which is optimally selected according to the instantaneous network load and E to minimize the overall delay. For example, if the load is close to 1, then the length of a cycle will become equal to maximum cycle length, because at that load, the maximum cycle length leads to optimal delay. What's more, the number of multiple parallel processes in MTP is fixed to three. This fixed number of threads is not optimal for the whole range of load, and MTP though improves the performance compared to IPACT at a light load, it even degrades the performance at a very heavy load (Figure 3.12). In S-AMGAV, we vary the number of multiple parallel processes according to the load. *To the best of our knowledge, this is the first paper on dynamic multi-gating.*

Reach independent polling - Paper [11] has proposed the GD algorithm, which achieves smaller cycle lengths than Δ. However, the GD algorithm does not minimize d_{grant} and thus its performance improvement is minimal compared to IPACT (Figure 3.12).

Void filling and pre-granting - Several algorithms have been proposed in which the transmission grant sizes exceed the reported queue depths [8], [14], [43]. Even so, these algorithms pre-grant users independently of the load, which is not optimal (section 3.3). Thus, these algorithms lead to even higher delays especially at heavy loads. On the other hand, S-AMGAV allocates extra bandwidth in consonance with the load. Thus, it achieves an optimal delay for a whole range of network loads. This load aware pre-granting is an enhancement over current pre-granting schemes that are load unaware. When compared with

the load unaware pre-granting scheme proposed in [8], S-AMGAV achieves at least 50% improvements in the delay and packet loss rate (Figure 3.12).

Solving over-reporting problem – To solve the problem of over-reporting bandwidth, an inter-thread scheduling scheme NA+ has been proposed [12] for MTP in which each thread is primarily responsible for allocating the bandwidth for the NA frames. NA+ takes care of the backlogged traffic by using a compensation factor for the USRs formation and ungranted bytes. NA+ schedules bandwidth in threads, i.e., the granted bytes on each GATE are linked to its corresponding REPORT message, and this increases its complexity proportional to the number of threads used. Moreover, the compensation factor is updated using historical information of a thread cycle, e.g., the ith scheduling-cycle of a thread is updated when the bandwidth scheduling process of the $(i\text{-}n)^{th}$ thread is completed. This leads to an increase in the queuing delay, cf. Figure 3.14 and Figure 3.15. The improvements to NA+ have been proposed in [49]. Furthermore, because of this thread dependent scheduling, it would be extremely complex to apply NA+ to dynamic thread algorithms (e.g., S-AMGAV with a load dependent number of threads). S-AMGAV solves these problems by granting bandwidth independent of the REPORT message on which it is reported. This not only solves the complexity of tracking REPORTs and their consecutive GATEs but also allows inter-thread scheduling.

3.5.2 Other important works

Paper [15] presents a survey of the recent work done for LR-PON solutions. In [9], the authors propose the DPP algorithm, which splits the scheduling in two phases; in each phase, the OLT schedules only half the number of ONUs. However, now the goods of statistical multiplexing are more limited as the number of users per group is reduced. The authors in [16] have tried to alleviate this problem by forwarding the unused bandwidth credits across the groups. The authors in [17] have proposed an integer linear programming (ILP) optimization technique over MTP to optimize grant sizing; nevertheless, the OLT requires sufficient central processing unit (CPU) power to be able to formulate and solve such an optimization model. Paper [18] further extends the work done in [17] by employing admission control mechanisms for different traffic classes. A DBA algorithm is proposed in [19], in which the authors combine MTP with a BR scheme based on adaptive threshold based optical burst assembly. The algorithm uses an extra intermediate buffer at an ONU. Only the length of the intermediate buffer, which is calculated based on the appropriate time and size thresholds, is reported to the OLT. Nevertheless, the mechanism uses the gated service in which the OLT grants whatever is requested. This can lead to bandwidth hogging by a malicious user and long scheduling-cycles. Paper [20] has proposed a decentralized DBA algorithm to improve the LR-PON performance, but

decentralized algorithms require the ONUs to communicate with each other, requiring special architectures. Thus, most of the proposed LR-PON solutions will not be able to benefit from a decentralized algorithm. Papers [21]-[23] provide insights into wavelength assignment problems and solutions for flexible WDMA/TDM PONs. The wavelength assignment problem, however, is out of the scope of this paper as we focus on LR-PON solutions with a logical connectivity similar to an EPON. Another algorithm that has been proposed is real time polling [32], which requires additional functionality like orthogonal optical coders at the ONUs. The use of orthogonal coders will make the system cost prohibitive, and thus we did not consider it for the comparison.

3.6 Results

By using the OPNET simulation environment, we simulate an LR-PON with 100 km reach. An LR-PON will typically serve more customers with a higher upstream line rate [50]. We consider an upstream channel rate R_u of 2.5 Gb/s and 64 users. The synthetic user traffic is self-similar with a Hurst Parameter of 0.8 [10] and with packets in the form of Ethernet frames, whose size vary exponentially between 64 and 1518 bytes. We have chosen a maximum user data rate R_d of 250 Mb/s, a guard time T_g of 1 µs, an ONU buffer size (Q_{max}) of 10 MB and a maximum allowed cycle length L_m of 2 ms. For all results, the load is normalized to R_u. Note that in the comparative study, we also include a 20 km PON with R_u = 1 Gb/s, 16 users and R_d = 100 Mb/s. Furthermore, we also analyzed the effects of Poisson distributed traffic in the section on the algorithm study. We used the proposed BR scheme to counter the problem of over-reporting in MTP and in S-AMGAV, and used the shortest propagation delay first (SPDF) approach [13] to schedule the ONUs. For DPP, we assume the excess share bandwidth mechanism as in [16]. The 95 % confidence interval of the simulation results gives at most 2 % variation, and is thus not shown in the figures.

3.6.1 Algorithm study

First, we study the delay performance of S-AMGAV for a 20 km and 100 km scenario in Figure 3.10a and b respectively. We also depict the measured value (through simulations) of E for both Poisson and self-similar traffic. S-AMGAV achieves an acceptable value of E, which can further be improved by using pre-granting schemes that are more complex compared to the currently used linear credit scheme. However, this will increase the complexity of the algorithm while improving the delay performance.

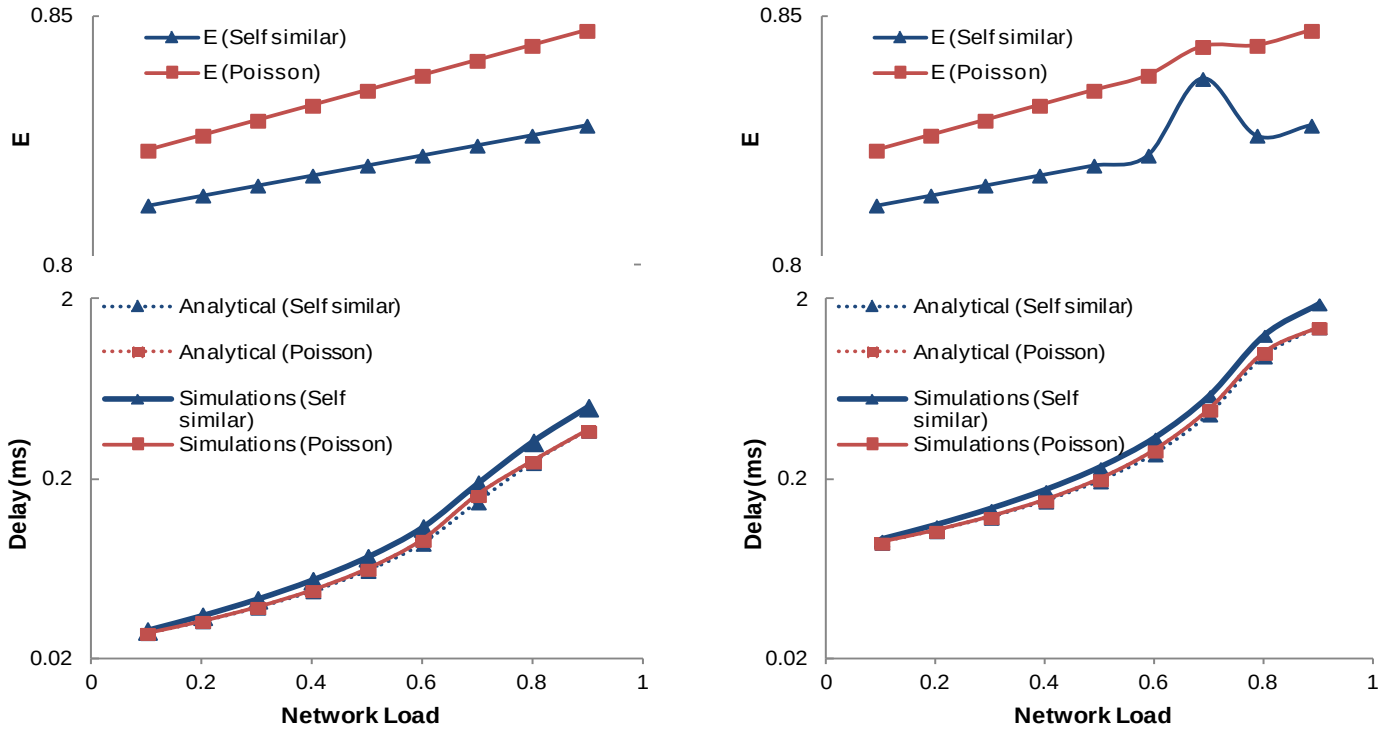

(a) (b)

Figure 3.10: Performance of S-AMGAV (a) Δ = 20 km, N = 16, (b) Δ = 100 km, N = 64

In this paper, we examine the improvements by S-AMGAV while maintaining complexity as low as possible. First, we focus on the variation of E with the network load. E generally increases with the load except there is a bump at a load of about 0.7 (for a 100 km scenario). This can be explained based on the length of the pre-granted transmission slots. If the ONUs are pre-granted bigger transmission slots, USRs are reduced, and consecutively E is increased. The transmission slot varies proportionally to L_c and K_{opt}; while L_c increases, K_{opt} decreases with the load. The effect of K_{opt} is minimal at light loads as it begins to decrease sharply only at a heavy load (Figure 3.4). The combined opposite effects of both factors may lead to a bump, as in the simulated scenario.

The delay performance of S-AMGAV is measured for both 20 and 100 km and compared with the analytical values (computed independently of whether the traffic is self-similar or Poisson) obtained in (21) with K as K_{opt} and E as indicated in the figure. Of course, the simplified analytical model leads to a slightly different delay performance, especially for self-similar traffic. Even so, the analytical values match with the simulation results with a satisfactory precision. The higher simulation values especially for the self-similar traffic can be explained by the fact that when the traffic is bursty, it may happen that the packet may not be granted in the same cycle but over the next few cycles, increasing d_{grant}. S-AMGAV maintains very low delay (2 ms) until a very heavy load (0.9), leading to a significant improvement. It should also be mentioned that the delay in a 100 km scenario especially at a light load is higher than in a 20 km scenario due to more users. Note from Figure 3.11 that S-AMGAV achieves similar delay performance for different reaches for the same number of users.

3.6.2 Comparative study

We compare the delay performance of S-AMGAV with IPACT, MTP, DPP, IPACT-GE, GD and AMGAV.

We first compare the effect of reach on the performance of different algorithms at a network load of 0.1 (Figure 3.11). We have also included the detailed analysis of the delay performance of these algorithms at a light load in Table 3.B. At a light load, the average delay bound is at least 1.5Δ for conventional algorithms like IPACT. For DPP, the delay at a light load is slightly higher than even IPACT, because every ONU is polled in one of the two cycles, where each cycle can be as large as Δ. MTP reduces d_{poll} to $0.5\Delta / N_g$, but still has a d_{grant} of Δ. At a light load, the GD algorithm has very short scheduling-cycles, leading to minimal d_{poll} and thus the minimum average delay bound is approximately Δ. IPACT-GE predicts traffic in the next scheduling-cycle, reducing d_{grant}, but still has a high minimum delay bound due to d_{poll}.

Table 3.B: Minimum delay bound of the different algorithms at a light load

Algorithms	d_{poll}	d_{grant}	d_{trans}	d_{total}
IPACT	$\frac{1}{2}\frac{N(\Delta+2T_r)}{N-\Lambda}$	$\frac{N(\Delta+2T_r)}{N-\Lambda}$	$\frac{1}{2}\frac{\Lambda(\Delta+2T_r)}{N-\Lambda}$	$\frac{(\Delta+2T_r)}{2}\left(\frac{3N+\Lambda}{N-\Lambda}\right)$
DPP	$\frac{1}{2}\frac{N(\Delta+2T_r)}{N-\Lambda}$	$\frac{N(\Delta+2T_r)}{N-\Lambda}$	$\frac{1}{2}\frac{\Lambda(\Delta+2T_r)}{N-\Lambda}$	$\frac{(\Delta+2T_r)}{2}\left(\frac{3N+\Lambda}{N-\Lambda}\right)$
MTP	$\frac{\Delta}{2N_g}$	Δ	$\frac{\Lambda\Delta}{2NN_g}$	$\Delta(1+\frac{1}{2N_g}+\frac{\Lambda}{2NN_g})$
GD	$\frac{1}{2}\frac{N(T_g+T_r)}{1-\Lambda}$	Δ	$\frac{1}{2}\frac{\Lambda(T_g+T_r)}{1-\Lambda}$	$\Delta+\frac{(T_g+T_r)(N+\Lambda)}{2(1-\Lambda)}$
IPACT-GE	$\frac{1}{2}\frac{N(\Delta+2T_r)}{N-\Lambda}$	$\frac{1}{2}\frac{N(\Delta+2T_r)}{N-\Lambda}$	$\frac{1}{2}\frac{\Lambda(\Delta+2T_r)}{N-\Lambda}$	$\frac{(\Delta+2T_r)}{2}\left(\frac{N+\Lambda}{N-\Lambda}\right)$
AMGAV	$\frac{1}{2}\frac{L_m}{Max(N_g)}$	$(1-\Lambda)\frac{L_m}{Max(N_g)}+\Lambda\Delta$	$\frac{\Lambda}{2N}\frac{L_m}{Max(N_g)}$	$\frac{L_m}{Max(N_g)}(1.5-\Lambda)+\Lambda\Delta$
S-AMGAV	$\frac{NE(T_g+T_r)}{2(E-\Lambda)}$	$\frac{NE(T_g+T_r)}{2(E-\Lambda)}$	$\frac{\Lambda E(T_g+T_r)}{2(E-\Lambda)}$	$\frac{E(T_g+T_r)(2N+\Lambda)}{2(E-\Lambda)}$

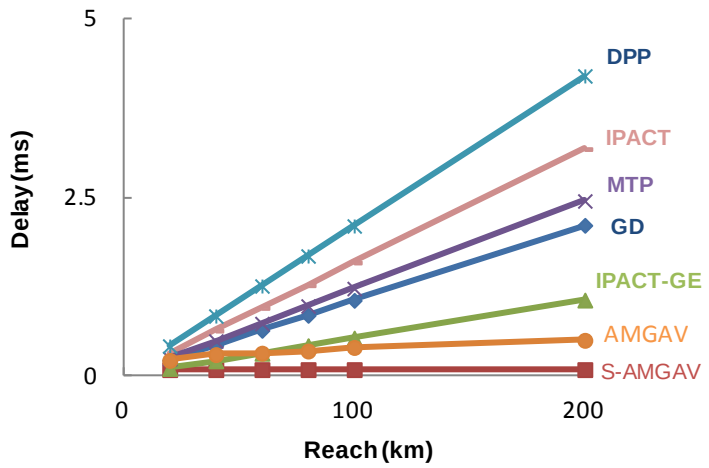

Figure 3.11: Comparison of effects of reach on the delay performance of different SotA algorithms with S-AMGAV, (N = 16)

AMGAV[27] minimizes this delay bound but still cannot make it completely independent of Δ. S-AMGAV minimizes the delay at light loads, thanks to the optimal combination of high ONU polling and the void-filling approach. It should be noted that the delay of S-AMGAV at a light load is independent of reach.

Then we compare the delay performance of S-AMGAV with different algorithms when the reach of the PON is 20 km (Figure 3.12a) and 100 km (Figure 3.12b). The significant improvement in S-AMGAV especially at a light load is as expected because the performance in current algorithms depends upon reach. On the other hand, the optimal ONU polling and void filling show a considerable improvement in the delay performance of S-AMGAV, and it achieves a minimum delay improvement of 50% compared to the other algorithms. Note that, as also calculated analytically, the minimum delay bound in S-AMGAV is much lower than the current algorithms, Table 3.B. More notably, the delay remains bounded to 2 ms until a very heavy load of 0.9. This shows that S-AMGAV can support the stringent delay requirements of voice and interactive video applications until a very heavy load, whereas the other algorithms fail to do so.

Figure 3.13 shows the gains of S-AMGAV on the PLR. The PLR for high-

[27] AMGAV uses *Max(N_g)*, which is not analogous to any used parameter in this algorithm. *Max(N_g) is* used to restrict the number of GATE messages determined intuitively at a light load. For detailed explanation, we refer the interested readers to [6]. In S-AMGAV, the value of N_g is already optimized to load and efficiency.

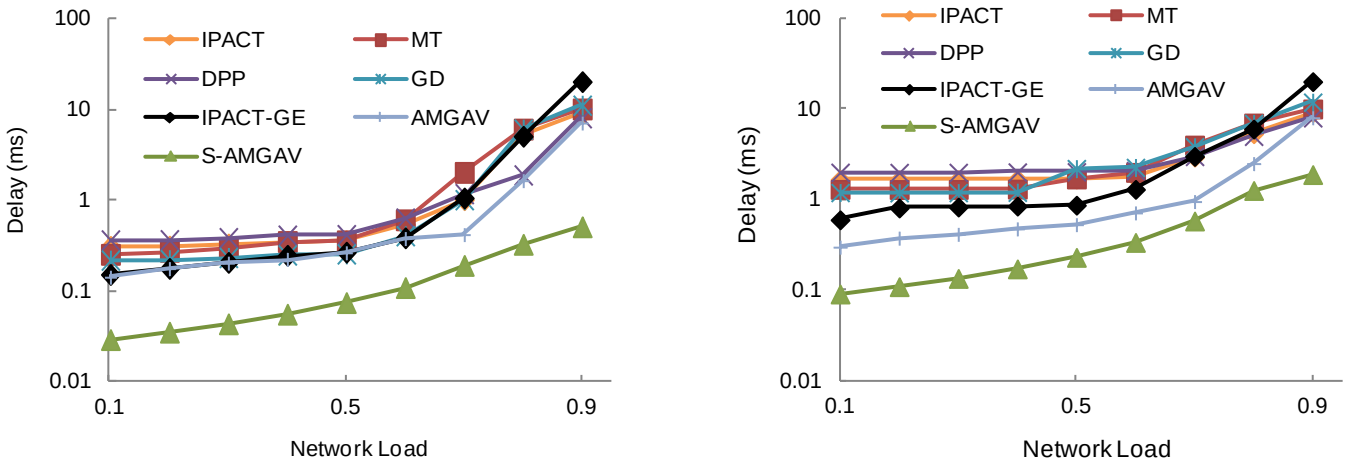

(a) (b)

Figure 3.12: Comparison of S-AMGAV with different algorithms (a) Δ = 20 km, N = 16, (b) Δ = 100 km, N = 64

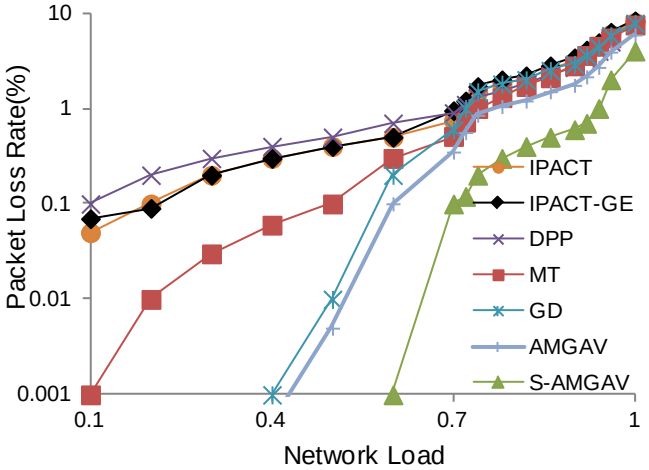

Figure 3.13: Packet loss rate (PLR) for different algorithms: Δ = 100 km, N = 64

priority traffic should be within 0.1%, and though low-priority traffic does not have any delivery guarantee, the overall PLR should be kept within 1% [39], to maximize available bandwidth for all classes of service. Packet loss occurs whenever a burst at the ONU saturates the buffer. Notably, if the burst with a duration Δt arrives with a data rate δ, then the buffer overflows if

$$\Delta t(\delta - \frac{T_W}{L_c}) \geq Q_{\max} - Q_i \qquad (30)$$

Note that the chances of a buffer overflow reduce with shorter cycle lengths and instantaneous queue size Q_i. As S- AMGAV has shorter polling intervals and smaller Q_i, it keeps the PLR below 1% until a load of 0.94. GD and AMGAV also reduce PLR due to short cycle lengths.

3.6.3 Bandwidth reporting schemes

We evaluate the delay performance of the proposed BR schemes with the traditional Queue Size (QS) reporting and NA+. Note that, though NA+ is not a BR scheme, we compare it with the proposed BR scheme to show the effect of both approaches, i.e., using an inter-thread scheduling scheme (NA+) or using BR schemes, to reduce the over-reporting problem. In Figure 3.14 and Figure 3.15, we evaluate the effect of various schemes on MTP and S-AMGAV respectively. Note that NA+ is applied only to MTP as implementation of NA+ in [12] was thread dependent and the number of threads (GATE) in S-AMGAV

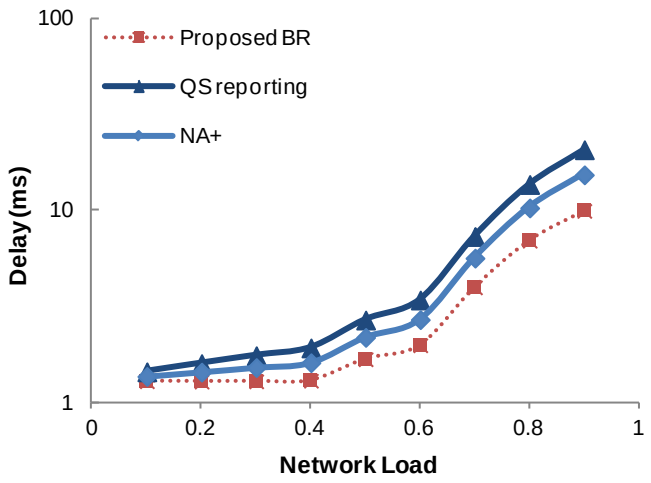

Figure 3.14: Comparison of the proposed BR with QS reporting and NA+ in MTP: Δ = 100 km, N = 64

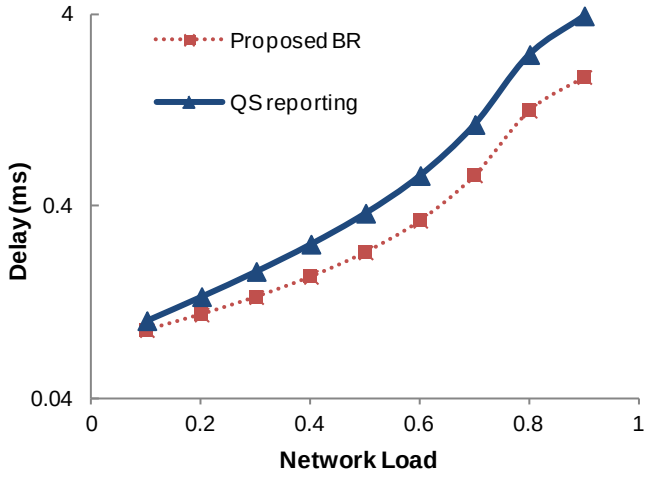

Figure 3.15: Comparison of the proposed BR with QS reporting in S-AMGAV: Δ = 100 km, N = 64

changes and does not remain static. The proposed BR scheme is applied to both MTP and S-AMGAV. In Figure 3.14, we see that the proposed BR scheme improves the performance compared to NA+. In NA+, the ungranted packets are compensated back on the same thread and this increases the delay and degrades the performance. From Figure 3.14 and Figure 3.15, it is clear that the gains of the proposed BR scheme are more prominent at a higher load as both over-reporting and USRs increase with the load.

3.7 Conclusions

In this paper, we proposed the Synergized Adaptive Multi-GATE polling with Void-filling (S-AMGAV) algorithm, which explores the benefits of having multiple polling processes to schedule the upstream traffic simultaneously. S-AMGAV improves both delay performance and PLR at least by 50% for a wide range of network loads, compared with the current state of the art algorithms like IPACT, IPACT-GE, DPP, MTP, NA+, GD and AMGAV. We evaluated analytically the value of the cycle length that optimizes the delay. For delay optimization, the optimal ONU polling should be used in conjunction with void filling. Void filling employs pre-granting mechanisms that should be used in consonance with the load and their efficiency. By various analytical formulations and simulations, we have proven that S-AMGAV, thanks to optimal polling and void filling, can achieve fairly reach-independent performance and can maintain stringent delay and PLR requirements even when the reach is as long as 100 km. We also proposed the novel bandwidth-reporting and grant-sizing approach, which makes the algorithm more efficient, less complex and fair. For future work, S-AMGAV can be extended to support QoS for different traffic classes.

References

[1] R. P. Davey, B. Grossman, M. Wiech, D. Payne, D. Nesset, A. Kelly, A. Rafel, S. Appathurai, and S. Yang., "Long-reach passive optical networks," *IEEE/OSA Journal of Lightwave Technology*, vol. 27, no. 3, pp. 273-291, 2009.

[2] L. Shi, S. S. Lee, H. Song, and B. Mukherjee, "Energy-efficient long reach passive optical network: a network planning approach based on user behaviors," *IEEE Systems Journal*, vol. 4, no. 4, pp. 449-457, 2010.

[3] H. Song, B. Kim, and B. Mukherjee, "Long-reach optical access networks: a survey," *IEEE Communications Surveys and Tutorials*, vol. 12, no. 1, pp.112-123, 2010.

[4] G. Talli and P. D. Townsend, "Hybrid DWDM–TDM long-reach PON for next-generation optical access," *IEEE/OSA Journal of Lightwave Technology*, vol. 24, no. 7, pp. 2827-2834, 2006.

[5] A. Dixit, B. Lannoo, G. Das, D. Colle, M. Pickavet, and P. Demeester, "Flexible TDMA/WDMA Passive Optical Network: Energy Efficient Next-Generation Optical Access Solution," *Optical Switching and Networking*, vol. 10, no. 4, pp. 491-506, 2013.

[6] A. Dixit, B. Lannoo, G. Das, D. Colle, M. Pickavet, and P. Demeester, "Adaptive multi-gate polling with void filling for long-reach passive

optical networks," in *IEEE International Conference of Transparent Optical Network (ICTON)*, 2011.

[7] G. Kramer, B. Mukherjee, and G. Pesavento, "IPACT: a dynamic protocol for an Ethernet PON (EPON)," *IEEE Communications Magazine*, vol. 40, no. 2, pp. 74-80, 2002.

[8] Y. Zhu, and Maode Ma, "IPACT with grant estimation (IPACT-GE) scheme for Ethernet passive optical networks," *IEEE/OSA Journal of Lightwave Technology*, vol. 26, no. 14, pp. 2055-2063, 2008.

[9] S. Y. Choi, S. Lee, T. J. Lee, M. Y. Chung, and H. Choo, "Double-phase polling algorithm based on partitioned ONU subgroups for high utilization in EPONs," *IEEE/OSA Journal of Optical Communications and Networking*, vol. 1, no. 5, pp. 484-497, 2009.

[10] H. Song, B. W. Kim, and B. Mukherjee, "Multi thread polling: a dynamic bandwidth distribution scheme in long-reach PON," *IEEE Journal of Selected Areas in Communications*, vol. 27, no. 2, pp. 134-142, 2009.

[11] N. Antunes, C. Fricker, P. Robert, and J. Roberts, "GATE-driven dynamic wavelength and bandwidth allocation for WDM EPONs," in *Global Telecommunications Conference (GLOBECOM)*, 2010.

[12] B. Skubic, J. Chen, J. Ahmed, B. Chen, L. Wosinska, and B. Mukherjee, "Dynamic bandwidth allocation for long-reach PON: overcoming performance degradation," *IEEE Communications Magazine*, vol. 48, no. 11, pp. 100-108, 2010.

[13] M. P. McGarry, M. Reisslein, F. Aurzada, and M. Scheutzow, "Shortest propagation delay (SPD) first scheduling for EPONs with heterogeneous propagation delays," *IEEE Journal of Selected Areas in Communications*, vol. 28, no. 6, pp. 849-862, 2010.

[14] Y. Luo and N. Ansari, "Limited sharing with traffic prediction for dynamic bandwidth allocation and QoS provisioning over Ethernet passive optical networks," *IEEE/OSA Journal of Optical Communications and Networking*, vol. 4, no. 9, pp. 561-572, 2005.

[15] B. Kantarci and H. T. Mouftah, "Bandwidth distribution solutions for performance enhancement in Long-reach passive optical networks," *IEEE Communications Surveys and Tutorials*, vol. 14, no. 3, pp. 714-733, 2012.

[16] M. P. McGarry, and M. Reisslein, "Investigation of the DBA algorithm design space for EPONs," *IEEE/OSA Journal of Lightwave Technology*, vol. 30, no. 14, pp. 2271-2280, 2012.

[17] B. Kantarci and H. T. Mouftah, "Periodic GATE optimization (PGO): A new service scheme for long-reach passive optical networks," *IEEE Systems Journal*, vol. 4, no. 4, pp. 440-448, 2010.

[18] B. Kantarci, and H. T. Mouftah, "Delay-constrained admission and bandwidth allocation for long-reach EPON," *Journal of networks*, vol. 7, no. 5, pp. 812-820, 2012.

[19] B. Kantarci, and H. T. Mouftah, "Two-stage report generation in long-Reach EPON for enhanced delay performance," *Computer Communications*, vol. 36, no. 14, pp. 1570-1580, 2013.

[20] A. H. Helmy, and H. A. Fathallah, "Taking turns with adaptive cycle time a decentralized media access scheme for LR-PON," *IEEE/OSA Journal of Lightwave Technology*, vol. 29, no. 21, pp. 3340-3349, 2011.

[21] K. Kanonakis and I. Tomkos, "Improving the efficiency of online upstream scheduling and wavelength assignment in hybrid WDM/TDMA EPON networks," *IEEE Journal of Selected Areas in Communications*, vol.28, no.6, pp. 838-848, 2010.

[22] K. Kanonakis, and I. Tomkos, "Scheduling and wavelength assignment issues in metro-scale hybrid WDM/TDMA EPONs," in *Future Network and Mobile Summit*, 2010.

[23] A. Buttaboni, M. Andrade, and M. Tornatore, "A multi-threaded dynamic bandwidth and wavelength allocation scheme with void filling for long reach WDM/TDM PONs," *IEEE Journal of Lightwave Technology*, vol. 31, no. 8, pp. 1149-1157, 2013.

[24] A. Mercian, M. McGarry, and M. Reisslein, "Offline and online multi-thread polling in long-reach PONs: a critical evaluation," *IEEE Journal of Lightwave Technology*, vol. 31, no. 12, pp. 2018-2028, 2013.

[25] C. Assi, M. Maier, and A. Shami, "Toward quality of service protection in Ethernet passive optical networks: challenges and solutions," *IEEE Network*, vol. 21, no. 5, pp. 12-19, 2007.

[26] N. A. M. Radzi, N. M. Din, M. H. A. Mansoori, I. S. Mustafa, and S. K. Sadon, "Intelligent dynamic bandwidth allocation algorithm in upstream EPONs," *IEEE/OSA Journal of Optical Communications and Networking*, vol. 2, no.3, pp. 148-158, 2010.

[27] M. R. Jason, R. Ferguson, and M. P. McGarry, "Online excess bandwidth distribution for Ethernet passive optical networks," *IEEE/OSA Journal of Optical Communications and Networking*, vol. 8, no. 4, pp. 358-369, 2009.

[28] C. M. Assi, Y. Ye, S. Dixit, and M. A. Ali, "Dynamic bandwidth allocation for quality-of-service over Ethernet PONs," *IEEE Journal of Selected Areas in Communications*, vol. 21, no. 9, pp. 1467-77, 2003.

[29] N. Jana, G. C. Sankaran, K. M. Sivalingam, and G. Parr, "Performance analysis of dynamic bandwidth allocation algorithms for long-reach PONs," in *IEEE Advanced Networks and Telecommunications System (ANTS)*, 2010.

[30] S. Bhatia and R. Bartos, "IPACT with smallest available report first: a new DBA algorithm for EPON," in *IEEE International Conference of Communications (ICC)*, 2007.

[31] D. Murayama, N. Oota, K. Suzuki, and N. Yoshimoto, "Low-Latency dynamic bandwidth allocation for 100 km long-reach EPONs," *IEEE/OSA Journal of Optical Communications and Networking*, vol. 5, no. 1, pp. 48-55, 2013.

[32] M. Kiaei, K. Fouli, M. Scheutzow, M. Maier, M. Reisslein, and C. Assi, "Low-latency polling schemes for long-reach passive optical networks," *IEEE Transactions on Communications*, vol. 61, no. 7, pp. 2936-2945, 2013.

[33] M. P. McGarry, M. Maier, and M. Reisslein, "Ethernet PON architectures and dynamic bandwidth allocation algorithms," *IEEE Communications Surveys and Tutorials*, vol. 10, no. 3, pp. 46-60, 2008.

[34] B. Lannoo, L. Verslegers, D. Colle, M. Pickavet, M. Gagnaire, and P. Demeester, "Analytical model for the IPACT dynamic bandwidth allocation algorithm for EPONs," *Journal of Optical Networking*, vol. 6, no. 6, pp. 667-688, 2007.

[35] F. Aurzada, M. Scheutzow, M. Herzog, M. Maier, and M. Reisslein, "Delay analysis of Ethernet passive optical networks with gated service," *Journal of Optical Networking*, vol. 7, no. 1, pp. 25-41, 2008.

[36] S. Bharati, and P. Saengudomlert, "Analysis of mean packet delay for dynamic bandwidth allocation algorithms in EPONs," *IEEE Journal of Lightwave Technology*, vol. 28, no. 23, pp. 3454-3462, 2010.

[37] J. Garcia-Reinoso, J. A. Hernández, I. Seoane, and I. Vidal. "On the effect of sudden data bursts in the upstream channel of Ethernet PONs employing IPACT under the gated-service discipline," *Optical Switching and Networking*, vol. 13, pp. 94-102, 2014.

[38] A. Mercian, M. P. McGarry, and M. Reisslein, "Impact of report message scheduling (RMS) in 1G/10G EPON and GPON," *Optical Switching and Networking*, vol. 12, pp. 1-13, 2014.

[39] A. Dixit, B. Lannoo, G. Das, D. Colle, M. Pickavet, and P. Demeester, "Dynamic bandwidth allocation with SLA awareness for QoS in Ethernet passive optical networks," *IEEE/OSA Journal of Optical Communications and Networking*, vol. 5, no. 3, pp. 240-253, 2013.

[40] F. Aurzada, M. Scheutzow, M. Reisslein, and M. Maier, "Towards a fundamental understanding of the stability and delay of offline WDM EPONs," *IEEE/OSA Journal of Optical Communications and Networking*, vol. 2, no.1, pp. 51-66, 2010.

[41] H. Zhao, N. Ansari, and Y. Q. Shi, "Self-similar traffic prediction using least mean kurtosis," in *IEEE International Conference on Information Technology: Coding and Computing [Computers and Communications]*, 2003.

[42] M. Ghaderi, "On the relevance of self-similarity in network traffic prediction," in *School of Computer Science*, University of Waterloo, 2003.

[43] I. Gravalosa, K. Yiannopoulosa, C. G. Papadimitrioud, and E. A. Varvarigosa, "A modified max-min fair dynamic bandwidth allocation algorithm for XG-PONs," in *European Conference on Networks and Optical Communications (NOC)*, 2014.

[44] X. Bai, A. Shami, and C. Assi, "On the fairness of dynamic bandwidth allocation schemes in Ethernet passive optical networks," *Computer Communications*, vol. 29, no. 11, pp. 2123-2135, 2006.

[45] S. Choi and J. Park, "SLA-aware dynamic bandwidth allocation for QoS in EPONs," *IEEE/OSA Journal of Optical Communications and Networking*, vol. 2, no. 9, pp. 773-781, 2010.

[46] F. An, Y. Hsueh, K. Kim, I. White, and L. Kazovsky, "A new dynamic bandwidth allocation protocol with quality of service in Ethernet-based passive optical networks," in *International Conference on Wireless and Optical Communications (WOC)*, 2003.

[47] A. Dixit, G. Das, B. Lannoo, D. Colle, M. Pickavet, and P. Demeester, "Jitter performance for QoS in Ethernet passive optical networks," in *European Conference on Optical Communications (ECOC)*, 2011.

[48] A. Helmy, H. Fathallah, and H. Mouftah, "Interleaved polling versus multi-thread polling for bandwidth allocation in long-reach PONs," *IEEE/OSA Journal of Optical Communications and Networking*, vol. 4, no. 3, pp. 210-218, 2012.

[49] J. Ahmed, J. Chen, L. Wosinska, B. Chen, and B. Mukherjee, "Efficient inter-thread scheduling scheme for long-reach passive optical networks," *IEEE Communications Magazine*, vol. 51, no. 2, pp. S35-S43, 2013.

[50] 249025-ICT OASE Project, D2.1: Requirements for European next-generation optical access networks.

4

Energy Efficient Dynamic Bandwidth Allocation for Ethernet Passive Optical Networks: Overview, Challenges, and Solutions

If I have seen further than others, it is by standing upon the shoulder of giants.

−ISAAC NEWTON

Energy efficiency, together with QoS, is an important requirement for optical access networks. In this chapter, we propose a novel algorithm to enable sleep modes at the ONU.

Abhishek Dixit, Bart Lannoo, Didier Colle, Mario Pickavet, and Piet Demeester.

Published in Journal of Optical Switching and Networking, Elsevier, 2014.

Abstract: Energy efficiency and green communications have become well-established themes for next-generation communications systems, with specific regard to reducing carbon footprint, lowering environmental impact, and minimizing operational expenditures. Apart from conforming to the required societal green agenda, there are also many practical and financial advantages to creating solutions that exhibit such benefits. Extending the advantages of energy efficiency to access networks is paramount as it is the major contributor of energy consumption in the Internet. Among the various factors of energy consumption in access networks, optical network units (ONUs) at the customer's premises consume the bulk of energy: ONUs consume about 60-70% of the energy consumed in current fiber-to-the-home networks. In this paper, we propose a dynamic bandwidth allocation (DBA) algorithm for Ethernet passive optical networks (EPONs). The DBA algorithm exploits the sleep mode functionality, in which the optical network unit (ONU) is put into sleep according to the traffic load of the ONU. We explore the DBA paradigm for two kinds of ONUs: legacy (with large sleep overheads) and next generation (with small sleep overheads). We also extend the DBA algorithm with a variety of grant sizing (bandwidth allocation) schemes. The DBA algorithm achieves significant power savings in comparison to traditional power-ignore DBAs.

4.1 Introduction

Expected global energy demand is growing faster than 2% per annum [1], and will most likely become unattainable in the years to come. Among others, one of the factors leading to the upsurge in the energy needs of society is the continuous colossal growth in the information and communication technology (ICT) sector, particularly the Internet. Today, the ICT and the Internet are the important constituent factors of power consumption; and they account for approximately 5 and 1% respectively of the total electrical power consumption in developed economies [2]. However, the contribution of the ICT and the Internet will continue to become more crucial in the coming years because of today's always-online behavior of users and the continual emergence of bandwidth absorbing applications. It is estimated that a substantial increase of electric power of 20 TWh per annum is required, and this is approximately 8-10% of the total generated power for the ICT [3]. Such a high increase in energy consumption not only poses a serious threat of the scarcity of energy but also increases the consumption of hydrocarbon fuels leading to the emissions of greenhouse gases, which have serious environmental impacts. This has forced the scientific community to solicit the measures of energy efficiency, and now green communication is a well-nurtured theme.

Out of the total Internet power consumption, access networks consume about

80-90% of the power, and an optical network unit (ONU), installed at a customer's premises, accounts for about 60-70% of the energy consumed in current fiber-to-the-home (FTTH) networks. Thus, designing energy-efficient access networks can reduce the appalling requirements of energy production and its environmental connotations, and can lead to significant economic dividends. Passive optical networks (PONs) are presently considered as a promising technology to deliver high data rates to users, and are inherently more energy efficient than their previous counterparts (e.g., ADSL and VDSL) [4]. Ethernet PON (EPON), which is an important candidate of PONs, has been widely deployed in Japan and Korea, and is the focus of this paper.

Many efforts have been made to minimize the power consumption of ONUs. An actively considered solution is the implementation of low power modes, in which some ONU functionalities are powered down if they are temporally not used [5]. An important example of a low power mode is sleep mode [6]-[7].

In paper [8], we proposed the sleep mode aware (SMA) dynamic bandwidth allocation (DBA) algorithm that slots the activity period of every ONU, only during which an ONU needs to wake up to transmit and receive packets. In this paper, we extend the evaluation for two kinds of ONUs: ONUs with latest technology use, referred as next generation (NG-ONUs), and ONUs that are already deployed, referred as legacy (L-ONUs). NG-ONUs can use the latest innovations in receiver and transmitter designs and will have minimal overheads (few microseconds). On the other hand, L-ONUs will suffer from large sleep overheads (few milliseconds). The challenges in designing DBA algorithm for both kinds of ONUs are different. NG-ONUs require frame-by-frame (or cycle-by-cycle) sleep control whereas L-ONUs require longer sleep time. Depending upon the network load, the proposed solution achieves energy savings of about 70-80% for NG-ONUs and of about 30-70% for L-ONUs.

The remainder of this paper is organized as follows. We discuss the overview and the requirements of sleep mode in EPON in section 4.2. In section 4.3, we introduce the energy efficient DBA algorithm. Section 4.4 gives the simulation results and finally section 4.5 concludes the paper.

4.2 Overview of low power mode in EPONs

In this section, we give an overview of EPON (Subsection 4.2.1), present benefits and requirements of sleep mode (Subsection 4.2.2) in EPON, discuss various low power modes (Subsection 4.2.3), outline the architectural challenges in the implementation of sleep mode (Subsection 4.2.4), and then describe the energy efficient DBA algorithms (Subsection 4.2.5).

4.2.1 EPON

An EPON is a point-to-multipoint fiber optical network with only passive elements in the optical distribution network (ODN), i.e., between an optical line terminal (OLT) at the central office (CO) and the ONU (Figure 4.1). The most typical EPON architecture is based on a tree topology, with the OLT as the root of the tree and the ONUs as the leaves, connected over a passive power splitter. Sometimes, even a two-stage of splitting may be used. The distance between the OLT and each ONU typically ranges between 10 and 20 km. The upstream (ONUs to OLT) and downstream (OLT to ONU) transmission channels are separated by using wavelength division multiplexing (WDM). Typically, a 1550 nm wavelength is used for downstream transmission and a 1310 nm wavelength is used for upstream transmission.

In the upstream direction, an EPON is a multipoint-to-point network, in which multiple ONUs transmit data to the OLT through the 1:M passive combiner. Since all ONUs share the same upstream transmission medium, an EPON employs a medium access control (MAC) protocol, called multi-point control protocol (MPCP), to arbitrate the access to the shared medium in order to avoid data collisions in the upstream direction. The ONU sends REPORT messages requesting bandwidth based on its queue size, and the OLT sends back a GATE message to the ONU informing the allocated bandwidth. Several DBA algorithms have been proposed for facilitating this bandwidth access, and Interleaved Polling with Adaptive Cycle Time (IPACT) [9] is the most important

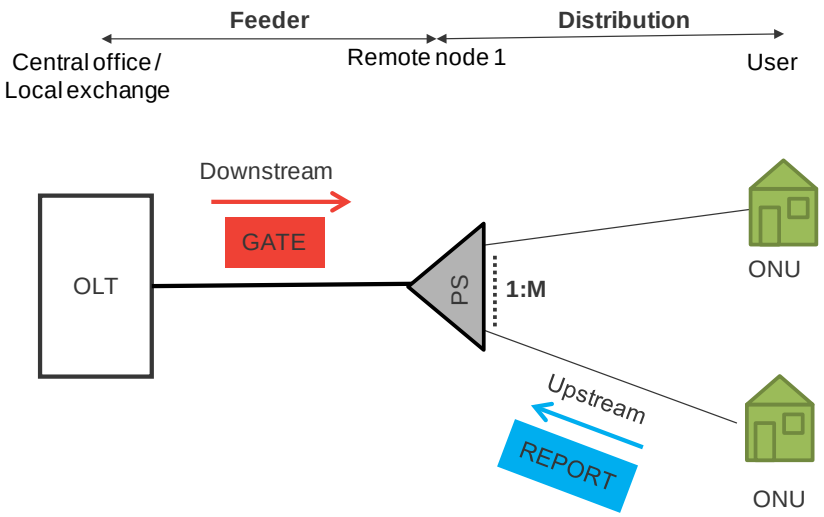

Figure 4.1: A typical EPON architecture

example, in which the polling of each ONU is interleaved, i.e., the next ONU is polled before the transmission from the previous one has arrived at the OLT.

In the downstream direction, an EPON is a point-to-multipoint network, in which the OLT broadcasts data to each ONU on a first come first serve (FCFS) basis through the 1:M power splitter. Each ONU extracts the data destined for it based on its MAC address. Because of this FCFS transmission, an ONU has to continuously probe the packets destined to it, and this leaves no opportunity to sleep. Therefore, new DBA algorithms are required that can impart sleep efficiency in EPONs.

4.2.2 Energy savings and requirements of sleep modes

In this subsection, we first discuss the possibilities of energy savings and then identify the key requirements of an energy-efficient DBA algorithm.

4.2.2.a Potential energy savings

There are large possibilities to save energy by sleep modes because of the following reasons:

Currently, ONUs consume about 60-70% of the energy consumed in current FTTH networks. Hence, large gains can be procured by saving energy at the ONUs.

The traffic in access link is bursty and follows the Pareto principle[28], which states that 80% of the network load is generated by 20% of users [10]. Many users thus remain idle for most of the time, and therefore can sleep.

Furthermore, access links are heavily under-utilized with a low average utilization of 15% [11]. This gives many opportunities for ONUs to sleep.

Even in the periods of heavy network loads, an access link is shared by an ONU for a time fraction inversely proportional to the total number of active ONUs. For example, in a system with 16 active ONUs, the access link is shared by an ONU for a time fraction of 6.25% (1/16). An ONU can thus ideally sleep for 93.75% of the time.

4.2.2.b Requirements

The energy efficient algorithm must ensure the following requirements:

No degradation of high-priority traffic performance: High-priority traffic like voice and interactive video are extremely sensitive to delay and jitter performance, and thus the energy-efficient DBA algorithm must maintain the strict quality of service (QoS) requirements [12] for high-priority traffic while imparting energy gains. To meet this end, the polling time of an ONU must be

[28] The Pareto principle has applications in engineering as well as social sciences, and it states that 80% of an effect is due to 20% of sources. For example, 80% of traffic is on 20% of roads.

short so that the waiting time of an ONU is minimal and high-priority traffic can be served immediately. Furthermore, the energy-efficient DBA algorithm must ensure minimal degradation of channel utilization, and this requires limiting sleep overhead, which is the time in switching an ONU from sleep to active mode. To minimize the effects of overheads, an ONU should be allocated an activity slot, as large as possible. The large activity slot accompanied with the overhead minimizes the overall presence of overheads.

Compatible with legacy and next generation ONU architectures: As discussed before, to minimize the degradation of high-priority traffic, an ONU has to be polled with short time intervals. However, shorter polling intervals, and consecutively sleep periods, may induce significant penalties due to sleep overheads. These overheads can be reduced by the transmitter (Tx) and the receiver (Rx) designs proposed recently [13]-[15]. However, the L-ONU (or already deployed) cannot support such designs and will not be able to support short sleep periods [16]. Hence, a DBA algorithm should consider both types of ONUs.

Compatible with MPCP framework: Currently, in the MPCP framework, if an ONU does not reply within 50 ms, the ONU is deregistered. The time to register back an ONU can take as long as 10 seconds or more. Therefore, the energy efficient algorithms should assume a maximum sleep period of 50 ms to prevent an ONU from being deregistered from the network.

4.2.3 Low power modes

To minimize the power consumption of ONUs, a variety of low power states have been actively considered: namely power shedding, doze, deep sleep, fast (cyclic) sleep and dynamic power save state [13], [17]. These approaches differ based on the parts of the ONU that are switched off [7]. In this paper, we focus on sleep modes. Sleep mode can be considered as the cyclic transition between active and sleep state, where sleep state can be defined as the state in which non-essential functional blocks and both the ONU transmitter and the receiver are turned off. Sleep mode can be classified further as deep and fast sleep mode based on the periods of sleep, and obviously, the deep sleep approach has comparatively longer periods of sleep.

In Figure 4.2, we present the ONU block diagram in active and sleep state. In active state, all components consume full power. In sleep state, the transceiver is completely switched off, whereas the digital components can be clock-gated to save power consumption of the system on chip (SoC). The power consumption of SoC can be reduced to maintain an internal timer, so that the ONU can be woken up on the expiry of the timer interval. Furthermore, user network interfaces (UNIs) like subscriber line interface circuits (SLIC) and gigabit-Ethernet (GbE) can employ other power saving mechanisms. These mechanisms

are covered in more detail in section 4.2.4.

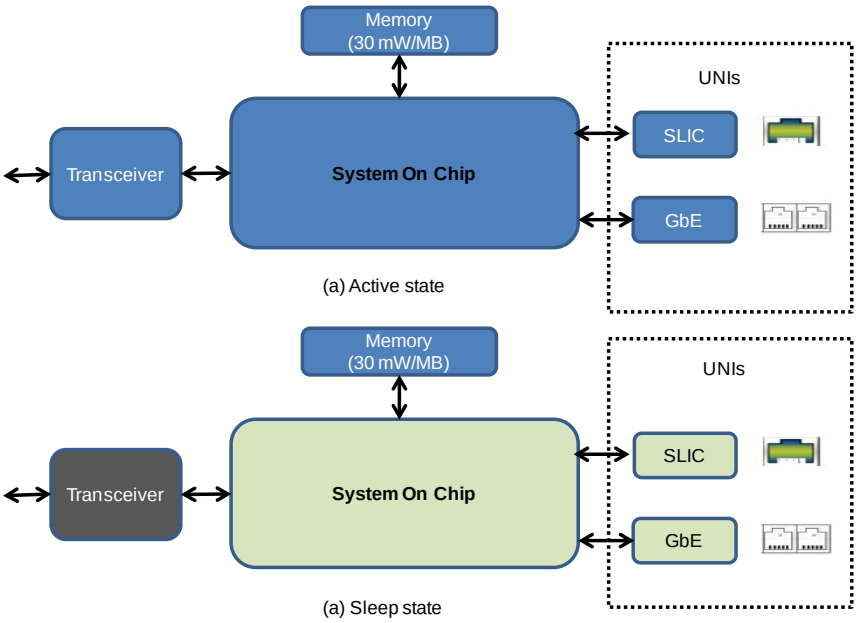

Figure 4.2: ONU block diagram in active and sleep state. The component in black color (i.e. transceiver) is switched off. Green color (i.e. SoC, SLIC and GbE) represents the lower power consumption

4.2.4 Architectural challenges in sleep mode

In this subsection, we discuss various architectural issues associated with sleep modes.

Challenges at receivers − The ONU Rx consists of a photodiode (avalanche or positive-intrinsic-negative (PIN)), a trans-impedance and a limiting amplifier. The ONU recovers the clock from the downstream data and remains in synchronization with the optical line terminal (OLT). If the receiver of an ONU is powered down, the ONU loses the clock, and consecutively its synchronization with the OLT. On being powered back, the ONU needs to recover the clock and synchronize to the network before being able to send upstream traffic. Hence, the clock recovery and the synchronization time are the two overheads associated with sleep periods. The clock recovery can take about 2-5 ms. On the other hand, synchronization time is limited to the inter-arrival time (maximum 13 µs) of the Ethernet preamble. The ONU can synchronize by detecting an Ethernet preamble and by subsequently reading the fixed start position delimiter. Thus, out of these two overheads, the clock recovery poses

the main bottleneck in enabling sleep modes.

Nevertheless, paper [14] shows that the clock recovery time can be reduced to a few nanoseconds using a burst mode clock and data recovery (BM-CDR) circuit at the ONU. The BM-CDR, however, uses a local oscillator that makes the design more expensive. Even though, these expensive BM-CDRs can be considered for NG-ONUs, L-ONUs cannot be considered equipped with them. Thus, L-ONUs experience a longer sleep overhead compared to NG-ONUs.

Challenges at transmitters − On the other hand, the ONU transmitter is already a BM transmitter, and is therefore optimized for a fast (in the order of nanoseconds) turn on/off. Thus, currently switching off the transmitters does not pose a significant challenge. To minimize the transmitter switching time further, instead of switching off the whole transmitter block, the authors [13] have proposed the dynamic power save mechanism, where only the laser driver block is switched between active and sleep state in a shorter time. The laser driver block consumes the largest portion of the total current of the transceiver, and therefore a lot of power can be saved even in heavy traffic conditions. Further, there are proposals to use low-power transmitters like vertical cavity surface emitting based lasers (VCSEL) [15]. However, still VCSEL based transmitters have constraints with the maximum optical power that they can achieve.

Challenges at digital processing circuits − Digital processing circuits can be clock gated, power gated or can be completely powered off [7]. Clock gating disables (i.e., gating) the clock signal of the register that feeds a portion of the combination logic that is not performing useful functions. Clocks consume power because they continuously toggle registers and removing clocks from the parts that are not useful saves power. Power gating uses low-leakage transistors to shut off the power supplies of the parts of a design that are not used. The advantage of clock gating and power gating is that the components can be turned on/off in microseconds. On the other hand, powering off a whole digital circuit reduces power consumption to zero, but it takes a longer switching time (depending on the functionality) of up to tens of milliseconds.

UNIs − UNIs also support power savings. SLIC modules available today support no on-hook transmission. Low power idle (LPI) mode has been recently proposed for the GbE interface [18]. In LPI mode, the transmitter sends out a periodic pulse to keep the receiver in sync instead of the normally required continuous transmission between the transmitter and the receiver.

4.2.5 Energy efficient DBA algorithms: overview and challenges

In this section, we present the overview of energy efficient DBA algorithms and discuss the main challenges in their implementations. A variety of

algorithms have been proposed for saving energy in Ethernet passive optical networks. To discuss the algorithms, we divide it into two broad divisions:

4.2.5.a Enabling sleep periods within a DBA cycle (for NG-ONUs with small sleep overheads)

When sleep overheads are small, sleep mode can be enabled on a per cycle basis. This per cycle sleep mode, also referred to as cyclic sleep, enables ONUs to transmit and receive packets in every cycle. As a result, there are no large QoS issues as the length of a DBA cycle is limited by the QoS requirements. In addition, there are still enough opportunities for an ONU to sleep, as an ONU needs to transmit for only $1/N$ times, where N is the number of users.

To implement cyclic sleep, current algorithms focus to make the downstream transmission more energy efficient. Note that the transmission in the upstream direction is already energy efficient as the ONU transmits only on its turn. However, in the downstream direction, the traffic is transmitted on a FCFS basis, and consequently an ONU has to continuously probe the packets destined to it. This leaves no opportunity for an ONU to sleep. Because of this, there are clear-cut gains of scheduling downstream traffic in an energy-efficient way. To enable sleep modes, the downstream traffic of an ONU has to be transmitted during a time slot that is already known to an ONU. This unfolds two scheduling problems: first, determining the length of the slot and secondly, determining and letting an ONU know the time epoch of the next slot transmission in advance.

Currently this has been tackled in the following ways. Paper [19] proposes a straightforward scheduling mechanism by using a fixed bandwidth allocation (FBA) scheme. In FBA, the downstream transmission is split in fixed cycles, during which the OLT transmits a fixed number of time slots to each ONU. FBA is significantly energy-efficient as bandwidth is allocated in regular intervals, known to the ONUs. The latter can turn their Rx on only when it is required. The downside of FBA is that it cannot adapt to bursty traffic, leading to excessive bandwidth waste and delay. Paper [20] solves this problem by transmitting the traffic in a burst (and no longer in a first come first serve method), and using a rule between an OLT and an ONU to enable sleep periods. For example, the paper proposes to use a rule by which an ONU can sleep for a period $0.8 \times \Delta$, where Δ is the cycle time of the previous cycle. However, this is inefficient as it leads to either early wakeup of the ONUs or delay in the traffic scheduling. Paper [21] divides the cycle into many rounds, where the OLT probes ONUs in the first round and allocates bandwidth in the next round. However, with many rounds, there will be high bandwidth wastage due to a large number of guard band overheads. Another methodology [22] is that an OLT transmits downstream traffic during the upstream transmission slot of an ONU. This has potential to increase sleep periods for an ONU. However, the paper assumes that an OLT knows the reports of all intermediate ONUs, but that is not always the case.

Another paradigm [16] is that at the beginning of a cycle, an OLT collects all reports and issues GATE messages to every ONU informing them of their sleep and wake up time within the cycle. As this is an offline scheduling, in which an OLT has to gather all REPORTs before scheduling, it increases packet delay.

4.2.5.b Enabling sleep periods over multiple DBA cycles (L-ONU architectures with large sleep overheads)

For L-ONUs, cyclic sleep cannot be enabled and thus the ONUs have to be switched off for multiple cycles. Therefore, energy efficiency gains will be procured at the expense of QoS performance. An important point of exploration is how long an ONU can sleep [23]. If the ONU sleeps for longer periods, better energy efficiency gains are possible. Paper [24] proposes an algorithm where an ONU sleeps for a fixed period if there is no traffic for an ONU during a certain idle period. Paper [20] proposed to increase the sleep time exponentially every time it encounters a new idle period. A more general variation of sleep time according to the idle periods is discussed in [25]. However, during sleep, an ONU can no longer transmit upstream and receive downstream traffic, and thus even high-priority traffic can be either lost or suffers a long delay. For upstream traffic, this problem is solved by using a time slot per cycle during which the ONUs that want to wake up early can report their traffic arrival [11]. However, for high-priority traffic in the downstream direction, there is no way to wake up a sleeping ONU. Hence, the sleep period has to be carefully determined and conveyed to an ONU.

For making transmission of upstream traffic more energy efficient, paper [26] suggests the packet coalescing methods in which an ONU makes the request for the upstream transmission only when its queue crosses a particular threshold. This enables transmission of packets in a batch, reducing sleep overheads.

4.3 Sleep mode aware (SMA) algorithm

In this paper, we propose a new DBA algorithm, which we refer to as the SMA algorithm. We will discuss SMA in the context of both NG-ONUs and L-ONUs. Both types of ONUs pose different challenges of bandwidth scheduling.

4.3.1 NG-ONUs

In SMA, the OLT buffers the downstream traffic for each ONU and transmits it only during a known activity slot of an ONU. This removes the requirement that an ONU should be awake at all times, and consequently, gives an opportunity for an ONU to sleep. It, however, necessitates buffering even in the downstream direction and increases packet delay.

SMA, like IPACT, polls ONUs in a round-robin manner and issues GATE

messages to every ONU in each cycle. The GATE message contains two important messages for an ONU. First, it contains the activity slot during which an ONU has to remain active, and second, it contains the sleep period. An ONU can transmit and receive in the given activity slot and sleep until the expiry of the sleep period. The determination of these two messages constitutes the two main problems of energy-efficient DBA scheduling: prediction of the sleep period and determination of the activity slot (grant sizing).

4.3.1.a Prediction of the sleep period

One of the important challenges is to predict and communicate the sleep time to an ONU. The OLT embeds the sleep time S_T and transmission slot T_S in the GATE message, and an ONU sleeps for S_T time after transmitting and receiving its bandwidth for T_S time. An OLT needs the following information (cf. Figure 4.3) to calculate the sleep time $S_T(i,p)$ of ONU p: time epoch of present (let us assume cycle i) GATE $G(i,p)$, time epoch of next GATE $G(i+1,p)$, transmission slot $T_S(i,p)$, and sleep overheads T_o of ONU :

$$S_T(i,p) = \underbrace{G(i+1,p)}_{Unknown} - \underbrace{G(i,p) - T_S(i,p) - T_o}_{Known} \qquad (1)$$

The OLT knows the three components of sleep time but the time of issuing the GATE message of the next cycle for an ONU, i.e., $G(i+1,p)$, may not be known at the time of issuing the present GATE message. Figure 4.4 explains it more clearly. We have assumed two ONUs for clarity. Let us assume that at time T, the OLT knows the buffer statistics of both ONUs and their round-trip time (RTT, denoted as Δ in the remainder of this paper). Thus, at the transmission time of the first GATE G_1 to ONU_1, the OLT can easily calculate the grant time of the next GATE message for ONU_1. However, at the time of issuing the second GATE message for ONU_1, the REPORT message from ONU_2 has still not arrived, and thus the OLT cannot calculate the time epoch of the next GATE message for ONU_1. Thus, the OLT needs to predict fairly the time of next GATE transmission.

In the SMA algorithm, the OLT utilizes the existing REPORT statistics for predicting the time of next GATE transmission. For example, an OLT may not know the REPORT of all intermediate ONUs but already can draw a fair idea of the next cycle length from the existing pool of information. Careful evaluation helps us to know that for an EPON consisting of N ONUs, the time of issuing the next GATE message $G(i+1,p)$ to ONU p will depend on the $(i\text{-}1+mod(1,p))^{th}$ REPORT message of the $[N\text{-}mod((N\text{-}p+1),N)]^{th}$ ONU, where mod (x,y) is the

remainder of *(x/y)*. For example, the 3rd GATE of the 4th ONU depends on the 2nd REPORT of the 3rd ONU. When the REPORT messages from an ONU arrive, we determine the grant time of the next (in cyclic order) ONU. Using the latest determined grant time of ONU *k*, we can calculate the time epoch $G(i+1, p)$ at which the $(i+1)^{th}$ GATE message to ONU *p* is transmitted and is formulated by:

$$G(i+1, p) = \underbrace{G(i+1, k) + \Delta(k) - \Delta(p)}_{Known} + \underbrace{\rho}_{Unknown} \tag{2}$$

where $\Delta(p)$ is the round trip time of ONU *p* and ρ is the transmission slot of the remaining ONUs (the ONUs whose REPORTs do not arrive) as shown in Figure 4.3. For example (Figure 4.5), at the transmission time $G(i,0)$, the OLT already knows $G(i,2)$ and can predict $G(i+1,0)$ by predicting the REPORT message of 2nd ONU in the $(i\text{-}1)^{th}$ cycle. So, the next cycle length can be estimated by predicting the transmission slot of the ONUs whose REPORTs do not arrive at the time of issuing the present GATE message. However closer *k* will be to *p* (in cyclic order), the more accurate the estimation will be.

A simple estimation strategy for predicting the transmission slot for the remaining ONUs is to assume minimum transmission slots (time to transmit one REPORT message) for the remaining ONUs. This will induce no delay penalties but will cause early wake-up of the ONUs. Similarly, other mechanisms like adopting maximum transmission slot or the transmission slot of the last cycle can be adopted for an ONU. Both mechanisms can induce higher delay penalties compared to the first strategy (minimum transmission slot per ONU), but will harness better energy efficiency. In this paper, we adopt the transmission slots of the last cycle for estimating the sleep time; this mechanism seems most logical as given the bursty nature of the traffic, the bandwidth report from an ONU repeats for some cycles.

Let us assume that the predicted transmission slot of the remaining ONUs is (ρ-μ), where μ is the error in prediction. This will reduce the ideal value of $S_T(i, p)$ to $S_T(i, p) - \mu$. From Figure 4.3, we can calculate the sleep percentage (S_P) of an ONU as*:*

$$S_P = \frac{S_T(i, p) - \mu}{S_T(i, p) + T_O + T_S(i, p)} \tag{3}$$

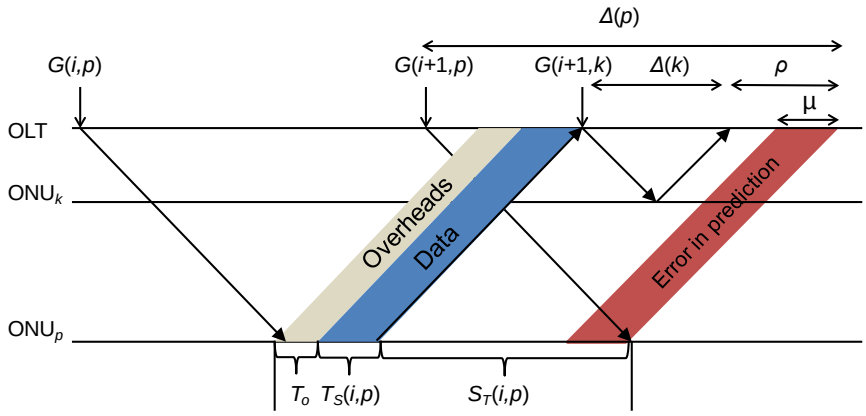

Figure 4.3: GATE prediction in the SMA algorithm

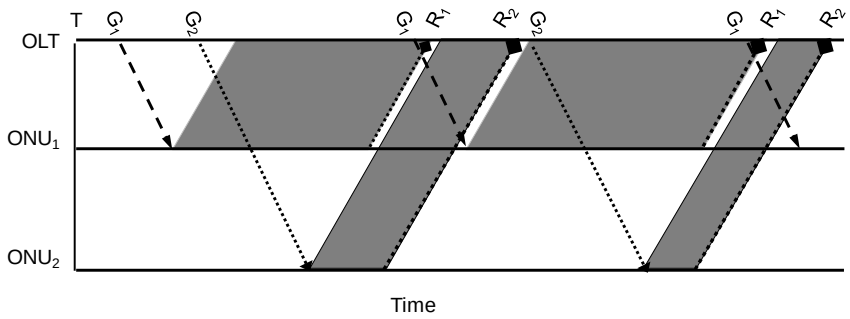

Figure 4.4: A simple EPON with an OLT and two ONUs showing REPORT (R_1 and R_2 for ONU_1 and ONU_2) and GATE (G_1 and G_2 for ONU_1 and ONU_2) messages transmission

4.3.1.b Grant sizing approaches:

The second issue is to decide the grant sizes for the active ONUs. There are various approaches by which an OLT can decide the grant for an ONU, referred to as grant sizing:

Upstream Centric (UC) − In this approach, T_S is determined based only on the upstream traffic, as

$$T_S = Min\left(\frac{T_m}{N}, \frac{B_u}{R_u}\right) \tag{4}$$

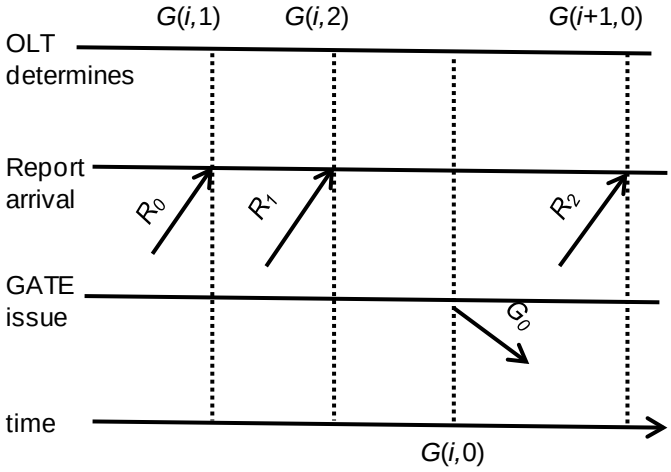

Figure 4.5: Illustration of the next GATE transmission time prediction scheme for a system with three ONUs

where *Min* represents the minimum value of the function, T_m is the maximum cycle time in which ONUs are polled, B_u is the backlogged upstream bytes for an ONU, and R_u is the upstream channel rate.

Upstream and Downstream Centric (UDC) − In this approach, T_S is determined based on both the upstream and the downstream traffic, as

$$T_S = Min\left(\frac{T_m}{N}, Max\left(\frac{B_u}{R_u}, \frac{B_d}{R_d}\right)\right) \tag{5}$$

where *Max* represents the maximum value of the function, B_d is the backlogged downstream bytes for an ONU, and R_d is the downstream channel rate.

Void aware (VA) − The UDC approach chooses the maximum of the upstream and the downstream bandwidth backlog, and hence, it may create voids (cf. Figure 4.6), which is the difference between the upstream and the downstream slot, and deteriorate the performance of the algorithm at a heavy load. In VA, we measure the voids formed and adopt the grant sizing such that the voids does not exceed a definite maximum amount *V*. We show the pseudo-code of the SMA-VA approach in Figure 4.7, where the voids are restricted to *V*.

Minimum Sleep Time (MST) − SMA polls an ONU based on the load. At a light load, the ONU polling time is very short and this requires an ONU to wake up frequently, reducing the time for which an ONU can sleep. In SMA-MST,

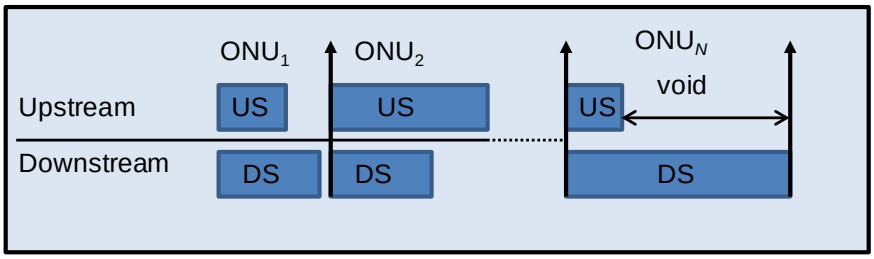

Figure 4.6: Void formations in SMA-UDC approach. Abbreviations used in the figure: US = Upstream data slot; DS = Downstream data slot

$t_u = \frac{B_u}{R_u}$; $t_d = \frac{B_d}{R_d}$;
If $(t_u > t_d)$ { *If* $(t_u - t_d > V$, *Then* $T_S = t_d + V$; *Else* $T_S = t_u$; }
Else { *If* $(t_d - t_u > V)$, *Then* $T_S = t_u + V$;*Else* $T_S = t_d$; }

Figure 4.7: Pseudo-code of SMA-VA

every ONU is granted a minimum T_S so that the polling time of an ONU is not very short, and even at a very light load, an ONU has a minimum sleeping time S_{min}. Thus, this approach assures a minimum sleep time for an ONU. First, T_S is computed using the UDC approach and if T_S is smaller than S_{min}/N, then T_S equivalent to S_{min}/N is chosen.

4.3.2 L-ONUs

For L-ONUs, the cyclic sleep mode cannot be enabled and thus the sleep period has to be larger than the one calculated for NG-ONUs. However, the same SMA signaling can be used with only the difference in the length of the sleep periods.

To put an ONU to sleep, a simple procedure is adopted: whenever an ONU encounters an idle period of more than a threshold idle period S_i, it is inducted into sleep mode for S_T time, where S_T is chosen according to the QoS requirements [23].

Furthermore, we propose a provision to allow ONUs to quit sleep mode on the arrival of high-priority upstream traffic. In this method, an OLT allocates a probing cycle after a fixed time (T_{max}) to allow ONUs to quit their sleep mode before time and REPORT the arrival of upstream traffic (Figure 4.8). Every ONU is allocated a fixed time slot within the probing cycle and since the probing

cycle repeats after a fixed time, an ONU knows at what periodic time intervals it can access the upstream channel to report the packets. Obviously, an ONU has to wake up in advance to guard for the wake-up (t_w) and the synchronization (t_s) time. The time duration T_P of the probing cycle has to take into account the time T_R needed to send a REPORT by an ONU and the time slot T_G between the transmission of data from ONUs. More precisely, it can be computed as: $T_P = (T_R + T_G)N$.

This use of probing cycles also induces additional channel under-utilization of $T_P/(T_{\max} + T_p)$, but this can be configured according to the right choice of T_P and $T_{\max}$. In addition, an ONU on an average experiences an additional delay T_{rd} to report the packets:

$$T_{rd} = t_w + t_s + T_{\max}/2 \tag{6}$$

Note that another procedure to quit sleep mode has also been proposed in [11]. In [11], the probing cycles are initiated at the start of each TDMA cycle. This can give a quicker access to an ONU to report the packets arrival; however, there are three drawbacks of this approach. First, it increases the delay of the active ONUs as they encounter T_P per cycle. Second, it creates a higher guard bands. Third, since ONUs are not aware of the probing period, this approach induces an additional sleep overhead of $T_c/2$, limiting the sleep efficiency.

For L-ONUs, when ONUs are awake, their Rx is not put to sleep dynamically, and thus there are no incentives for aligning the up- and downstream traffic. Thus, the most straightforward grant-sizing scheme for L-ONUs is to use the traditional FCFS transmission for downstream traffic and conventional grant sizing schemes such as “limited grant size” for upstream. However, for allowing the co-existence of L-ONUs with NG-ONUs, slotted downstream transmission schemes proposed for NG-ONUs can still be used.

Note that even if the proposed DBA schemes can minimize the performance degradation for high-priority upstream traffic, the downstream traffic will still suffer from high delay due to sleep modes. These high delays can be minimized by using either shorter S_T or cross-layer implementations [11] (i.e. learning the number of TCP flows, etc.).

4.4 Simulation results

In this section, we study the performance of the proposed DBA approaches by conducting a simulation of an EPON access network with 16 ONUs in the OPNET simulation environment. For our simulation study, we have assumed a

maximum ONU load of 100 Mb/s, upstream and downstream bandwidth of the EPON as 1 Gb/s, maximum OLT to ONU distance of 20 km, maximum cycle time of 2 ms, OLT and ONU buffer of 1 MB, and guard time between adjacent slots as 1 µs. We generated traffic as in [12]. The synthetic user traffic is self-similar with a Hurst Parameter of 0.8 and with a packet size varying exponentially in the form of Ethernet frames (64 to 1518 bytes). All ONUs are assumed to be uniformly loaded. High-priority packets constitute 20% of the overall network load, and displace the packets with low priority if there is not enough buffer space to store the packet. The upstream and downstream load is considered symmetrical. For L-ONUs, we consider the power consumption in active state (P_{ac}) as 4.2 W and in sleep state (P_s) as 0.73 W, Table 4.A. The power consumption values are from [7]. For NG-ONUs, we add a power consumption of 0.2 W to both active and sleep state due to the use of a burst mode receiver.

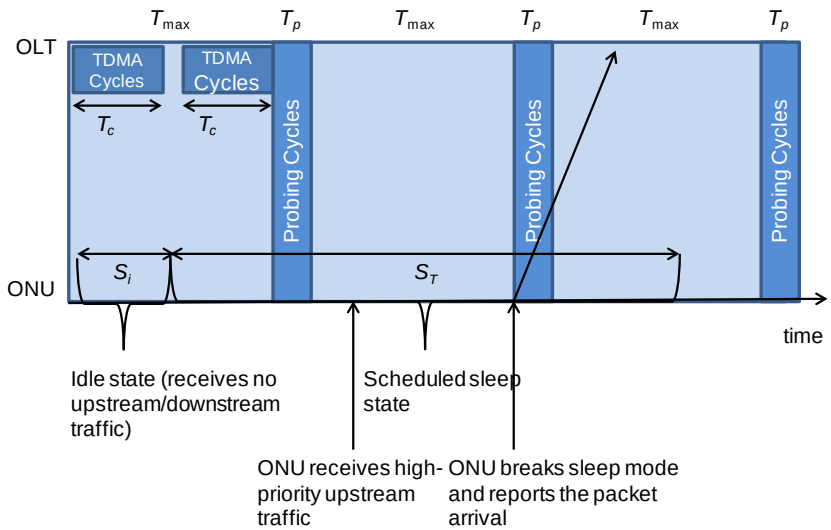

Figure 4.8: Procedure to allow ONUs to quit sleep mode foretime

Table 4.A: Power consumption of different components in active and sleep state for L-ONUs

Component	Power in Active state	Power in Sleep state
Transceiver	1.2	0
SoC	1.2	0.3
SLIC	0.25	0.15
GbE	0.7	0.14
Efficiency (80%)	0.84	0.14
Total	4.2	0.73

The sleep overheads for NG-ONUs and L-ONUs are chosen as 5 µs and 2 ms. For the SMA-MST approach, we have considered a minimum sleep period of an ONU as 1.25 ms.

First, we discuss the results for NG-PONs and then for L-ONUs.

4.4.1 NG-ONUs

For NG-ONUs, we measure the average delay of up- and downstream traffic (all traffic classes combined), and sleep time efficiency. We compare the results of the proposed schemes with IPACT and the FBA scheme. IPACT is not energy efficient but leads to the best delay performance. On the other hand, the FBA scheme uses a fixed time slot per ONU, which allows the ONUs to sleep for the maximum time. Figure 4.9 gives the upstream packet delay of the various approaches. Since SMA-UC gives an activity slot to an ONU keeping in mind only the upstream traffic, the upstream packet delay in the SMA-UC algorithm is similar to IPACT. However, the SMA-UC algorithm increases the delay of the downstream traffic significantly (cf. Figure 4.10) and hence, it will not be useful. The SMA-UDC algorithm achieves a compromised delay performance for both the up- and downstream traffic. For the evaluation of SMA-VA, we choose V as 0 and half (0.5) of the maximum cycle time. The SMA-VA (V = 0) algorithm increases the packet delay of both the up- and downstream traffic significantly at a light load, as the packets of one stream can be granted only if the packets of the other stream are also in the queue. The SMA-VA (V = 0.5) algorithm improves the performance at heavy loads whereas it degrades the performance at light loads. This is because the void formation is only critical at a heavy load. However, the SMA-VA approach does not show much benefit in comparison to the SMA-UDC approach. The SMA-MST approach maintains the delay bound at a light load and shows similar performance to the SMA-UDC approach at a heavy load. Note that the main advantage of the SMA-MST approach is not a higher delay performance but the assurance of a minimum sleeping period to an ONU that minimizes adverse effects of frequent mode switching [11].

Figure 4.11 shows the performance of various schemes on the sleep efficiency. In all proposed schemes, the sleep time increases with the load. This may seem counter-intuitive at the first sight but is because of higher polling, and consequently shorter sleeping periods, at a light load. At a light load, an ONU is polled more frequently due to shorter cycle times. It can thus sleep for shorter periods. In addition, the difference between the predicted GATE time and the actual GATE time is more significant over a shorter polling interval, leading to a longer waking time of the ONUs at a light load. As the load increases, the ONUs are polled less frequently, and thus they have a longer sleeping period. The SMA-MST approach has a high sleep percentage even at a light load because it maintains longer polling cycles. As already pointed out, the FBA scheme

achieves a load-independent and a high sleep percentage as the ONUs can sleep for a fixed time.

Figure 4.12 gives the power consumption of the various schemes. Power consumption (P_C) can be deduced from the time an ONU remains in sleep (cf. Figure 4.11), P_{ac} and P_s:

$$P_C(\%) = \frac{P_s \times S_T(\%) + P_{ac}(1 - S_T(\%))}{P_{ac}} \tag{7}$$

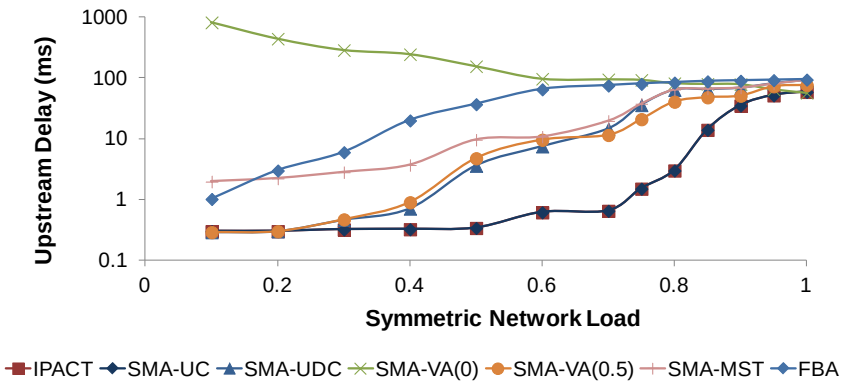

Figure 4.9: Packet delay of the upstream traffic

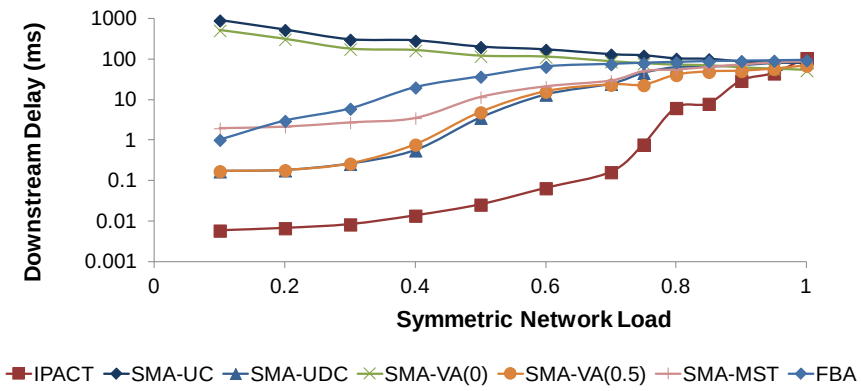

Figure 4.10: Packet delay of the downstream traffic

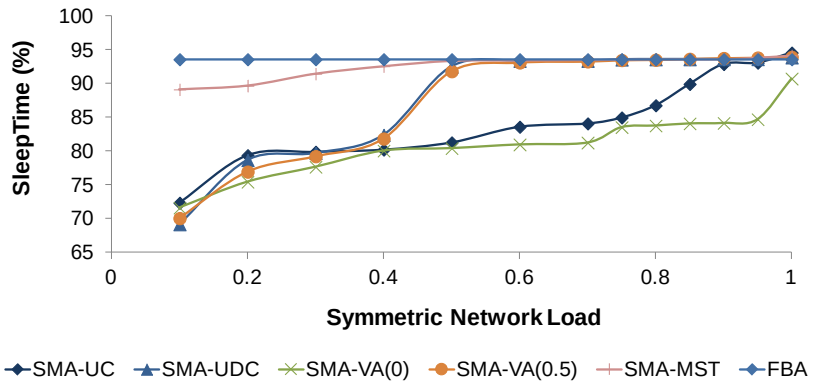

Figure 4.11: The time (in percentage) in which an ONU remains in sleep state

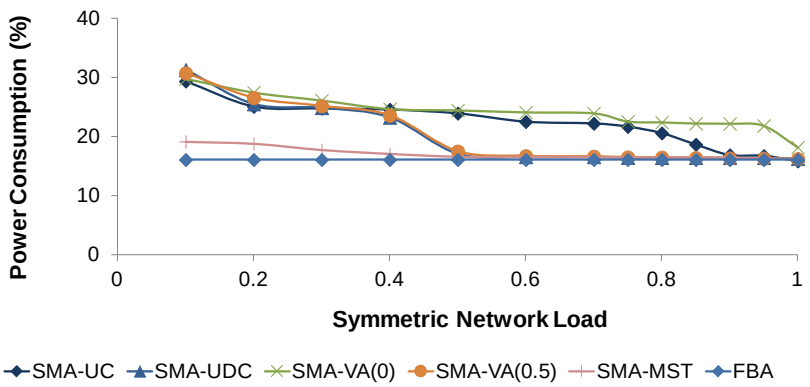

Figure 4.12: Power consumption (%) of the ONUs in various grant sizing schemes

From these results, it is clear that SMA-MST should be preferred as it saves maximum energy while keeping the performance within QoS bounds.

4.4.2 L-ONUs

For this evaluation, we consider all ONUs as L-ONUs. Both S_i *and* S_T are important design parameters and must be properly chosen. S_i can be chosen based on high-priority traffic characteristics. For example, paper [27] shows that the inter-arrival time of an ongoing voice session is limited to 20 ms, and thus S_i equivalent to 20 ms is chosen in the paper. S_T is chosen as 50 ms according to the limit of maximum non-response time after which an ONU is deregistered by the OLT. T_{max} is chosen as 2 ms. We consider that downstream traffic is transmitted on a FCFS basis for the active ONUs and the upstream bandwidth is allocated

using a limited grant-sizing scheme. Other assumptions (except sleep overheads) are similar to the first scenario.

For L-ONUs, we analyze the delay performance of high-priority and low-priority upstream traffic (Figure 4.13). We show the extra delay induced due to sleep modes and the total delay of both types of traffic. As expected, the extra delay induced for high-priority traffic is significantly low. Low-priority traffic suffers from a light load penalty, i.e., when the load is light, the delay of low-priority traffic increases, and this is because ONUs do not quit sleep mode on the arrival of low-priority traffic frames, and the low-priority traffic frames are withhold until the sleep time of the ONU expires. However, as the load increases, the ONUs remain active for more time and the delay penalty due to sleep mode decreases.

Figure 4.14 shows the energy savings due to the proposed scheme. The energy efficiency gains are found more at a light load as compared to a heavy load. Note that the effects of the cycle time on energy gains are limited here as the ONUs are not switched off/on a cycle-by-cycle basis.

4.5 Conclusions

In this paper, we proposed a sleep mode aware (SMA) algorithm for two kinds of ONUs: legacy (L-ONUs) and next generation (NG-ONUs). L-ONUs are assumed with large sleep overheads and NG-ONUs are assumed with small sleep overheads. NG-ONUs can wake-up in every frame, and thus have QoS performance that is more robust. For NG-ONUs, we proposed a novel sleep-period prediction scheme and four grant-sizing possibilities, according to the buffer backlog of the up- and the downstream traffic, namely: upstream centric (UC), upstream and downstream centric (UDC), void aware (VA), and the minimum sleep time (MST). The MST approach is found to be most useful for maintaining the delay bound and for simultaneously reducing frequent mode switching. In the proposed approaches, an ONU remains in sleep state for about 70-93%, leveraging power savings of about 70-80% depending upon the network load.

On the other hand, L-ONUs require sleep periods much longer than the cycle time. For them, we proposed a novel paradigm by which an ONU can quit the sleep mode on the arrival of high-priority traffic and can thus meet strict QoS requirements. The simulation results show that the algorithm induces minimal performance degradation to high-priority upstream traffic while achieving average energy savings of about 30-70% depending upon the network load.

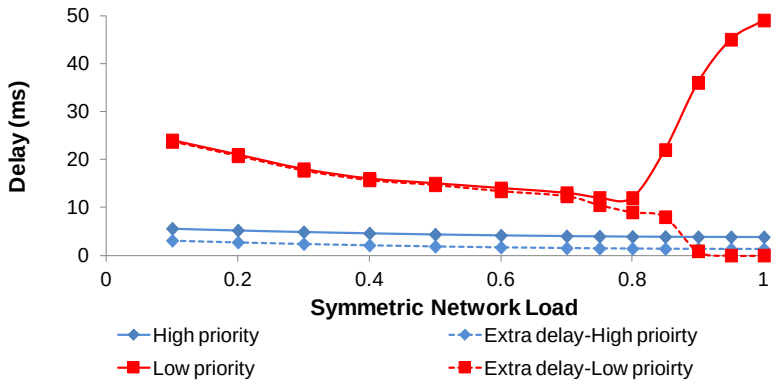

Figure 4.13: The delay performance of the ONUs

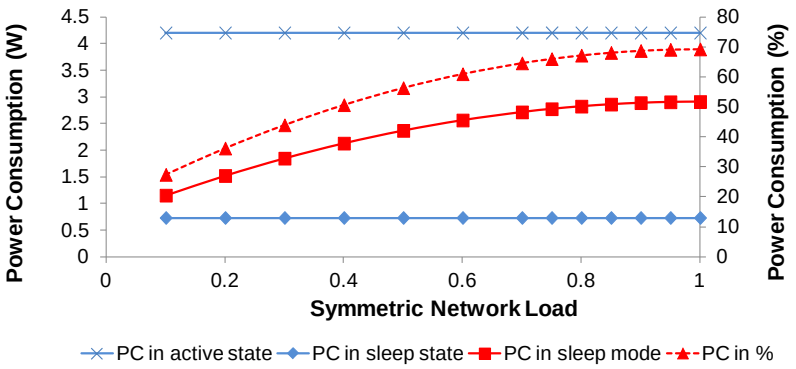

Figure 4.14: Power consumption in sleep mode with variation in the network load

Acknowledgments

The research leading to these results has received funding from the European Community's Seventh Framework Programme (FP7/2007-2013) under grant agreement n° 249025 (ICT-OASE), and grant agreement n° 257740 (Network of Excellence TREND).

References

[1] M. Pickavet, W. Vereecken, S. Demeyer, P. Audenaert, B. Vermeulen, C. Develder, D. Colle, B. Dhoedt, and P. Demeester, “Worldwide energy

needs for ICT: the rise of power-aware networking," in *IEEE Advanced Networks and Telecommunications System (ANTS)*, 2008.

[2] K. Hinton, J. Baliga, M. Feng, R. Ayre, and R. S. Tucker, "Power consumption and energy efficiency in the Internet," *IEEE Network Magazine*, vol. 25, no. 2, pp. 6-12, 2011.

[3] White paper available at: http://www.networksetp.eu/fileadmin/user_upload/Publications/Position_White_Papers/White_Paper_RoF.pdf

[4] J. Baliga, R. Ayre, W. V. Sorin, K. Hinton, and R. S. Tucker, "Energy consumption in access networks," in *Optical Fiber Communications (OFC)*, 2008.

[5] R. Dhaini, P. H. Ho, and G. Shen, "Toward green next-generation passive optical networks," *IEEE Communications Magazine*, vol. 49, no. 11, pp. 94-101, 2011.

[6] A. Dixit, B. Lannoo, S. Lambert, D. Colle, M. Pickavet, and P. Demeester, "Evaluation of ONU power saving modes in next generation optical access networks," in *European Conference on Optical Communications (ECOC)*, 2012.

[7] A. Dixit, B. Lannoo, D. Colle, M. Pickavet, and P. Demeester, "ONU power saving modes in next generation optical access networks: progress, efficiency and challenges," *Optics Express*, vol. 20, no. 26, pp. B52-B63, 2012.

[8] A. Dixit, B. Lannoo, D. Colle, M. Pickavet, and P. Demeester, "Energy efficient dynamic bandwidth allocation for Ethernet passive optical networks," in *IEEE Advanced Networks and Telecommunications System (ANTS)*, 2012.

[9] G. Kramer, B. Mukherjee, and G. Pesavento, "IPACT: a dynamic protocol for an Ethernet PON (EPON)," *IEEE Communications Magazine*, vol. 40, no. 2, pp. 74-80, 2002.

[10] R. Sanders, "The Pareto principle: Its use and abuse," *Journal of Product & Brand Management*, vol. 1, no. 2, pp. 37-40, 1992.

[11] L. Shi, B. Mukherjee, and S. S. Lee, "Efficient PON with sleep-mode ONU: progress, challenges, and solutions," *IEEE Network Magazine*, vol. 26, no. 2, pp. 36-41, 2012.

[12] A. Dixit, B. Lannoo, G. Das, D. Colle, M. Pickavet, and P. Demeester, "Dynamic bandwidth allocation with SLA awareness for QoS in Ethernet passive optical networks," *IEEE/OSA Journal of Optical Communications and Networking*, vol. 5, no. 3, pp. 240-253, 2013.

[13] E. Igawa, M. Nogami, and J. Nakagawa, "Symmetric 10G-EPON ONU burst-mode transceiver employing dynamic power save control circuit," in *Optical Fiber Communications (OFC)*, 2011.

[14] S.W. Wong, L. Valcarenghi, S. Yen, D. R. Campelo, S. Yamashita, and L. Kazovsky, "Sleep mode for energy saving PONs: advantages and drawbacks," in *IEEE Global Telecommunications Conference (Globecom*), 2009.

[15] E. Wong, C. A. Chan, P. I. Dias, M. Mueller, and M. C. Amann, "Vertical cavity surface emitting laser transmitters for energy efficient broadband access networks," in *International Conference on Communications (ICC)*, 2012.

[16] A. R. Dhaini, P. Ho, and G. Shen, "Toward green next-generation passive optical networks," *IEEE Communications Magazine*, vol. 49, no. 11, pp. 94-101, 2011.

[17] ITU-T Rec. G.Sup45, GPON Power Conservation, 2009.

[18] K. Christensen, P. Reviriego, B. Nordman, M. Bennett, M. Mostowfi, and J. A. Maestro, "IEEE 802.3az: the road to energy efficient Ethernet," *IEEE Communications Magazine*, vol. 48, no. 11, pp. 50-56, 2010.

[19] S. Lee, and A. Chen, "Design and analysis of a novel energy efficient Ethernet passive optical network," in *International Conference on Networks (ICN)*, 2010.

[20] J. Zhang, and N. Ansari, "Toward energy-efficient 1G-EPON and 10G-EPON with sleep-aware MAC control and scheduling," *IEEE Communications Magazine*, vol. 49, no. 2, pp. s33-s38, 2011.

[21] K. Kanonakis, J. Zhang, N. Cvijetic, I. Tomkos, and T. Wang, "1G/10G-EPON compliant scheme combining ONU energy efficiency with QoS performance," in *National Fiber Optic Engineers Conference*, 2012.

[22] Y. Yan, and L. Dittmann, "Energy efficiency in Ethernet passive optical networks (EPONs): protocol design and performance evaluation," *Journal of Communications*, vol. 6, no. 3, pp. 249-261, 2011.

[23] A. R. Dhaini, P. Ho, and G. Sheny, "Energy efficiency in Ethernet passive optical networks: for how long can ONU Sleep?," *Technical Report*, University of Waterloo, 2011.

[24] R. Kubo, J. Kani, H. Ujikawa, T. Sakamoto, Y. Fujimoto, N. Yoshimoto, and H. Hadama, "Study and demonstration of sleep and adaptive link rate control mechanisms for energy efficient 10G-EPON," *IEEE/OSA Journal of Optical Communications and Networking*, vol. 2, no. 9, pp. 716-729, 2010.

[25] J. Zhang, and N. Ansari, "Standards-compliant EPON sleep control for energy efficiency: design and analysis," in *IEEE International Conference on Communications (ICC)*, 2012.

[26] M. R. Pérez, S. H. Alonso, M. F. Veiga, and C. L. García, "Improving energy efficiency in upstream EPON channels by packet coalescing," *IEEE Transactions on Communications*, vol. 60, no. 4, pp. 929-932, 2012.

[27] L. H. Do, and P. Branch, "Real time VoIP traffic classification," *Technical Report*, no. 090914A, pp. 1-3, 2009.

5

ONU Power Saving Modes in Next Generation Optical Access Networks: Progress, Efficiency and Challenges

The internet to me is kind of like a black hole, and I never really go on it.

−JENNIFER LAWRENCE

From this chapter, we focus on architectures. In this chapter, we evaluate the power saving modes at the ONUs for different next generation optical access technologies. For this evaluation, we employ the sleep mode aware (SMA) algorithm proposed in the last chapter.

Abhishek Dixit, Bart Lannoo, Didier Colle, Mario Pickavet, and Piet Demeester.

Published in Optics Express, 2012

Abstract: The optical network unit (ONU), installed at a customer's premises, accounts for about 60% of power in current fiber-to-the-home (FTTH) networks. We propose a power consumption model for the ONU and evaluate the ONU power consumption in various next generation optical access (NGOA) architectures. Further, we study the impact of the power savings of the ONU in various low power modes such as power shedding, doze and sleep.

5.1 Introduction

Expected global energy demand is growing faster than 2% per annum [1], and will most likely become unattainable in the years to come. Among others, one of the factors leading to the upsurge in the energy needs of society is the continuous colossal growth in the information and communication technology (ICT) sector, particularly the Internet. Today, the ICT and the Internet are the important constituent factors of power consumption (*PC*); and they account for approximately 5 and 1% respectively of the total electrical *PC* in developed economies [2]. Out of the total Internet *PC*, access networks consume about 60-80% of power and an optical network unit (ONU), installed at a customer's premises, accounts for about 60% of the energy consumed in current fiber-to-the-home (FTTH) technologies [3]. Thus, significant energy savings can be attained by low energy consuming ONU architectures, and the ONU *PC* has remained as a key parameter in the conception of next-generation optical access (NGOA) networks.

While the design of low power consuming ONU architectures should be considered in the first place, the *PC* at ONUs can be further reduced by operating ONUs in low power modes. Low power modes have been discussed in ITU-T Rec. G.Sup45 and have potential to impart significant energy savings [4]. While all NGOA networks will likely benefit from low power modes, the amount of savings that can be procured vary significantly [5]. A holistic view on the *PC* of various NGOA architectures can only be derived by counting in the possible power savings at the ONUs. In this paper, we evaluate the *PC* of various NGOA architectures in active state and in low power modes. The results show that the architectures that have higher active state *PC* may achieve lower *PC* in low power modes.

The remainder of this paper is organized as follows. Section 5.2 discusses the considered NGOA networks. Section 5.3 proposes the ONU *PC* model. Section 5.4 discusses power saving modes, progress and challenges. Section 5.5 presents the evaluation methodology, and section 5.6 presents the results. Finally, section 5.7 presents the conclusions.

5.2 Optical access technologies

As the NGOA candidate, different system concepts are actively considered such as: high data rate time division multiple access (TDMA) passive optical network (PON) such as 40G-TDMA-PON, wavelength division multiplexing (WDM) PON, hybrid TDMA/WDM PON (TWDM-PON), point-to-point (PtP) and active optical network (AON) [6]. We will also compare these NGOA solutions with present state-of-art solutions like Ethernet PON (EPON) and 10G-EPON (10G-EPON).

The basic differences among various system aspects are the ways in which a user (or an ONU) connects to the optical line terminal (OLT) at the central office, and accesses network resources. While the network architecture of these solutions is quite different; in addition, these solutions require a different set of functionalities at the ONU. This different set of functionalities drives the *PC* of the ONU. First, the upstream and the downstream line rate of the technologies impact the *PC* as they influence the transceiver design and processing requirements; second, the need of tunability at the transmitter influences the *PC*, as the laser either needs to be thermo-electrically controlled or is a high power consuming uncooled tunable laser; third, if the ONU receives more than one wavelength, there is the need of a tunable filter, which increases the *PC*; and lastly, every TDMA based solution requires burst mode electronics, which increase the *PC*. We distinguish the important functionalities that influence the *PC* in the ONU in Table 5.A, and discuss them in the perspective of each architecture:

- ***TDMA-PONs:*** In TDMA-PON, the OLT accesses ONUs using a TDMA protocol over a power splitter. The architectural configuration of 40G-TDMA-PON is same as EPON and 10G-EPON but with the support of a much higher upstream and downstream rate using a non-return to zero (NRZ) on-off keying. It, however, suffers from reach limitations posed by serious dispersion issues with high data rate (e.g., 40G NRZ) transmission. Hence, special functionalities like electronic dispersion compensation (EDC) and optical amplification (OA) are required along with burst mode electronics.

- ***WDM-PON:*** WDM-PON offers the most straightforward way of capacity increase compared with TDMA-PON, where each user is given a separate wavelength. Since, users are on a separate wavelength, WDM-PON does not require the complexities of TDMA. Either the WDM-PON ONU is equipped with a tunable laser (TL) to tune to a separate wavelength or it may use the downstream signal wavelength to transmit on a separate upstream wavelength. For the second case, the ONU requires reflective semiconductor optical amplifiers (RSOA) and frequency shift keying (FSK) modulators for the simultaneous transmission of the upstream and the downstream signals. We

Table 5.A: NGOA system concepts and key required functionality

System	Data Rate		Tunable TX	Tunable Filter	Burst mode	Special functionality
	Upstream	Downstream				
EPON	1 G	1 G	/	/	√	NA
10G-EPON	1 G	10 G	/	/	√	NA
40G-TDMA	10 G	40 G	/	/	√	OA, EDC
WDM-RSOA	1 G	1 G	/	/	/	FSK modulators for upstream
WDM-TL	1 G	1 G	√	/	/	NA
TWDM	2.5 G	10 G	√	√	√	NA
PtP	1 G	1 G	/	/	/	NA
AON	1 G	1 G	/	/	/	NA

/ = does not require, √ = requires

consider these two variants of WDM-PON: with tunable lasers (WDM-TL) and with RSOA (WDM-RSOA).

- ***TWDM-PON:*** TWDM-PON combines the flexibility of TDMA-PON with the increased overall capacity of WDM technology. They use the TDMA functionality and tunable optics at both the transmitter and the receiver.

- ***PtP:*** In PtP, each ONU is connected directly via a fiber to the central office. It has the simplest ONU architecture.

- ***AON:*** AONs use an active remote node in the field, which requires powering and maintenance. Since, ONUs are accessed over the active switch, they do not require TDMA functionality and tunable optics.

5.3 ONU power consumption (*PC*) model

In Figure 5.1, we present the *PC* model of the ONU. The model takes data from [5]-[10] and the large survey of component datasheets. To compare the technologies fairly, the power consumption data of components are scaled relative to the power consumption value of 1.2 W of the GPON TRX as adopted in [7]. For example, the value of uncooled tunable TRX of WDM-PON and the GPON TRX are adopted as 0.75 W and 0.45 W respectively by [8]; these values are scaled up to 2 W and 1.2 W. Note that, the value of 1.2 W adopted in [7] was according to the maximum power consumption value found in the survey of component data sheets. For the analysis, we divide the ONU *PC* model in three main parts: user network interfaces (UNIs), core functional blocks (CFBs) and specific functional blocks (SFBs).

- ***UNIs:*** The interfaces towards client sides are referred as UNIs. Depending on the feature set of the ONU, the ONU can host different UNIs such as voice interfaces, data ports, multimedia over coax alliance (MoCA) interface, or video overlay interfaces. Voice interfaces are assumed to provide plain old telephone

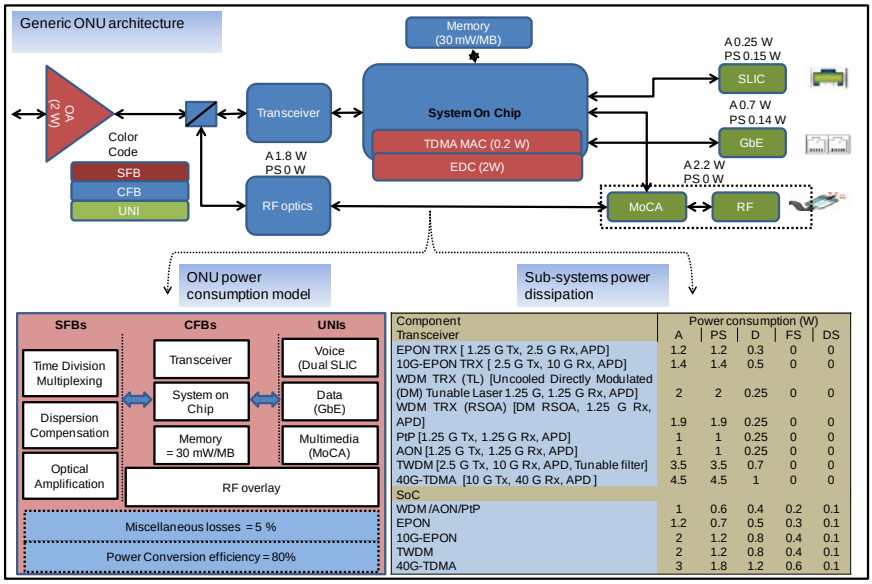

Component	Power consumption (W)				
Transceiver	A	PS	D	FS	DS
EPON TRX [1.25 G Tx, 2.5 G Rx, APD]	1.2	1.2	0.3	0	0
10G-EPON TRX [2.5 G Tx, 10 G Rx, APD]	1.4	1.4	0.5	0	0
WDM TRX (TL) [Uncooled Directly Modulated (DM) Tunable Laser 1.25 G, 1.25 G Rx, APD]	2	2	0.25	0	0
WDM TRX (RSOA) [DM RSOA, 1.25 G Rx, APD]	1.9	1.9	0.25	0	0
PtP [1.25 G Tx, 1.25 G Rx, APD]	1	1	0.25	0	0
AON [1.25 G Tx, 1.25 G Rx, APD]	1	1	0.25	0	0
TWDM [2.5 G Tx, 10 G Rx, APD, Tunable filter]	3.5	3.5	0.7	0	0
40G-TDMA [10 G Tx, 40 G Rx, APD]	4.5	4.5	1	0	0
SoC					
WDM /AON/PtP	1	0.6	0.4	0.2	0.1
EPON	1.2	0.7	0.5	0.3	0.1
10G-EPON	2	1.2	0.8	0.4	0.1
TWDM	2	1.2	0.8	0.4	0.1
40G-TDMA	3	1.8	1.2	0.6	0.1

Figure 5.1: ONU power consumption model

service (POTS). Dual subscriber line interface circuit (SLIC) modules are used to interface with the analog telephone line. The gigabit Ethernet (GbE) interface is considered for the support of data traffic, and RF video and MoCA for video and multimedia data.

- ***CFBs:*** The core functional block represents the power consumed by an optical transceiver (TRX), digital processing and memory. The optical TRX consists of a transmitter (TX) and a receiver (RX) block. The TX includes the *PC* for a laser diode (LD) and a laser diode driver (LDD). The RX consists of an avalanche photodiode (APD) or a PIN photodiode, transimpedance amplifiers (TIA) and limiting amplifiers (LA). Digital processing functions are considered to be implemented in a system on chip (SoC). The SoC includes the *PC* for a medium access control (MAC), a serialiser, a deserialiser, forward error correction (FEC), etc. The memory requirement in different concepts may vary (cf. section 5.6.3), and we have assumed the *PC* of 30 mW per MB of memory.

- ***SFBs****:* For a specific NGOA system concept, we add the *PC* for special functionalities like TDMA, EDC, and OA. For example, we add TDMA *PC* for EPON, 10G-EPON, and TWDM-PON, and TDMA, EDC and OA functionality for 40G-TDMA-PON.

Miscellaneous and power conversion losses are assumed at 5% and 20%, respectively. Note that, the power conversion efficiency consists of AC to DC and DC to DC conversion, which are both assumed to be 90%, resulting in the

overall power conversion efficiency of 80%. In the model, we also show *PC* values used for the components in active (A), power shedding (PS), doze (D), fast sleep (FS) and deep sleep (DS) state. These states are discussed in the following section.

5.4 Power saving modes: definitions, progress and challenges

We define the low power modes in section 5.4.1, and discuss progress, and challenges associated with powering off the parts of the ONU in section 5.4.2.

5.4.1 Definitions

ITU-T G.sup 45 [7] proposes a number of power saving states, namely power shedding, doze and sleep. These approaches differ based on the parts of the ONU that are switched off.

- ***Power shedding:*** The power shedding approach shut down the unused UNIs. Note that there can be many classes of power shedding based on the interfaces that can be shut down. For the analysis, we assume power shedding with MoCA and RF interfaces completely powered down.

- ***Doze state:*** In doze state, non-essential functions are powered off with an additional powering off of the ONU transmitter while the receiver remains on.

- ***Sleep state:*** In sleep state, non-essential functional blocks and both the ONU transmitter and the receiver are turned off.

We digress here to mention the difference between the term ‘state’ and ‘mode’ as used in the paper. Note that a mode represents the combination of states according to the load. For example, doze mode is referred to as the cyclic transitions between power shedding and doze state, and sleep mode as the cyclic transitions between power shedding, doze, or sleep state. Sleep mode can be classified further as deep and fast sleep mode based on the periods of sleep.

5.4.2 Progress and challenges

In this section, we review progress and challenges for the implementation of power saving modes.

- ***Transmitters:*** The switch on/off time of TXs is important, as a large switch on/off time will increase sleep overheads and guard bands, leading to the decrease in energy efficiency and throughput. The switch on/off time of the TX depends on whether it is a burst mode (BM) TX or a continuous mode (CM) TX. The BM-TX has inherited better ability to switch on/off and can be switched on/off within microseconds. On the other hand, the CM-TX takes about 1 ms to switch on/off [11] and thus cannot support very short sleep cycles. TDMA based

technologies like EPON and TWDM-PON use the BM-TX, and WDM-PON and AON use the CM-TX. In addition, switch on/off time depends upon transmission rates; high bit rate TXs have a longer switch on/off time than low bit rate TXs. To minimize further the switching time and the *PC* of the TX, there have been some recent proposals in [12] and [13].

- ***Receivers:*** The ONU receiver consists of the APD (or PIN), TIA, and LA. When the RX is powered down, the ONU loses the downstream signal, which is required to recover clock by the clock and data recovery (CDR) circuit, and is used to maintain synchronization between the OLT and the ONU. Paper [14] has shown that CDR can take as long as 5 ms to re-acquire clock. To minimize clock recovery time, there are the proposals of the burst mode CDR that uses a local oscillator to keep the ONU in accord with the OLT. The BM-CDR can reduce recovery time to as low as 10 ns for the 1 Gb/s receiver and even less for 10 G, as the higher bit rate CDRs can scan a higher number of bits in a shorter time. Note that, for NGOA architectures, ONUs can employ BM-CDRs, which will lead to negligible overheads associated with switching off a RX, and thus doze mode will not give any additional dividends compared with sleep mode. Doze mode makes sense only for ONUs that are already deployed in the field and are equipped with CM-CDR, wherein overheads associated with sleep mode are high compared with doze mode.

- ***Digital Processing circuits:*** Digital processing circuits can be clock-gated, or power gated, or can be completely powered off [15]. Clock-gating disables (i.e., gating) the clock signal of the register that feeds a portion of the combination logic that is not performing useful functions. Clocks consume power because they continuously toggle registers and removing clocks from the parts that are not useful saves *PC*. Power gating uses low-leakage transistors to shut off the power supplies of the parts of a design that are not used. The advantage of clock gating and power gating is that the components can be turned on/off in microseconds. On the other hand, powering off a whole digital circuit reduces *PC* to zero, but it takes a longer switching time (depending on the functionality) of up to tens of milliseconds. For the analysis, we assume a power saving between 60 to 90% by using clock gating, or power gating, or both.

- ***UNIs:*** UNIs also support power savings. SLIC modules available today support no on-hook transmission. Low power idle (LPI) mode has been recently proposed for the GbE interface [18]. In LPI mode, the transmitter sends out a periodic pulse to keep the receiver in sync instead of the normally required continuous transmission between the transmitter and the receiver. LPI mode can lead to power savings of about 50%. For MoCA interfaces, also power saving modes like “wake-on-MoCA” have been proposed.

Table 5.B gives the summary of switching time and power saving tradeoffs in considered mechanisms.

Table 5.B: Switching time and power saving tradeoffs in considered mechanisms

Mechanisms	Component	Switching ON/OFF time	Power Savings
Doze mode (TRX)	1.25 Gb/s CM	1 ms	100%
	1.25 Gb/s BM	10 ns	100%
	2.5 Gb/s BM	200 ns	100%
	10 Gb/s BM	500 ns	100%
Sleep Mode (RX)	CM-CDR	1-5 ms	100%
	BM-CDR	10 ns	100%
Clock Gating	Digital Processing Blocks	5 µs	30-60%
Power switching	Digital Processing Blocks	10 ms	100%
Low Power Idle	GbE	5 µs	0-50%
Wake on MoCA	MoCA MAC	5 ms	0-40%

5.5 Evaluation methodology

For the evaluation of power saving modes, we first discuss the proposed algorithm, sleep mode aware (SMA). Then in the next section, we discuss the assumptions for the analysis.

5.5.1 Sleep mode aware (SMA) algorithm

To evaluate sleep mode efficiency, a well-suited dynamic bandwidth allocation (DBA) algorithm is required, which can optimize the cyclic transitions between the states according to the traffic requirement. For this purpose, we apply an Ethernet PON (EPON) based protocol. EPON is chosen as an example; the approaches proposed, however, are generic and can apply to any system concept. Interleaved polling with adaptive cycle time (IPACT) [17] is considered as an important example of an EPON DBA algorithm for scheduling upstream transmission. IPACT, however, does not support sleep mode and thus we propose a new DBA algorithm, which we refer as the SMA algorithm. In traditional approaches, the downstream traffic is broadcasted to all ONUs and each ONU has to continuously hear the broadcasted traffic. This leaves no opportunity for the ONU to sleep and it wastes energy, as the ONU has to remain awake at all times and process packets that are not destined for it. In the SMA algorithm, the OLT buffers the downstream traffic for each ONU and only transmits it during a pre-determined activity slot of the ONU. The ONU transmits upstream traffic and receives downstream traffic only during this activity slot. This removes the requirement of the ONU to be awake at all times and gives an opportunity for the ONU to sleep. It, however, necessitates buffering even in the downstream direction and increases packet delay. SMA, like IPACT, polls ONUs in a round-robin manner and issues GATE messages to every ONU in each cycle. Now, the OLT computes the transmission slot (TS) as the function of the buffer backlog of the downstream and the upstream traffic of the ONU according to:

$$TS = Min\{\frac{T_{cycle}}{N_u}, Max(\frac{B_u}{R_u}, \frac{B_d}{R_d})\} \quad (1)$$

where Min/Max represents the minimum and the maximum value of the function, T_{cycle} is the cycle time in which ONUs are polled, N_u is the number of users, B_u and B_d are backlogged upstream and downstream bytes for the ONU, R_u and R_d are the upstream and the downstream data rate, respectively. SMA also safeguards against very frequent polling of the ONU by assuring every ONU a minimum sleeping time (MST). If the TS (calculated by eq. (1)) is smaller than MST / N_u, then the TS equivalent to MST / N_u is chosen. This insures that even at a very light load, the ONU polling time is not very short and the ONU does not wake up frequently. Note that, the ONU may be allocated a longer upstream TS than it requested, in which newly arrived packets between the time of a previous request and present grant are transmitted. If the ONU, however, has no additional packet arrivals, it goes to doze mode. The ONU sleeps for a period of $T_{cycle} - TS$. The proposed algorithm is adopted to study sleep mode in considered NGOA architectures. For example, for WDM PON, PtP, and AON, N_u is chosen as 1, and the polling cycle is fixed to T_{cycle}.

In addition, the OLT communicates the next wake up time to the ONU. The next wake up time of the ONU is the time of issuing the next GATE message of the ONU. The time of issuing the next GATE message of the ONU may not be known at the time of issuing the present GATE message; and thus the OLT predicts the time epoch of the issue of next GATE message. Figure 5.2a explains it more clearly. We have assumed two ONUs for clarity. Let us assume that at time T, the OLT knows the buffer statistics of both ONUs and their round-trip time (RTT). Thus, at the transmission time of the first GATE G_1 to ONU_1, the OLT can easily calculate the grant time of the next GATE message for ONU_1. At the time of issuing the second GATE message for ONU_1, however, the REPORT message from ONU_2 has still not arrived and thus the OLT cannot calculate the time epoch of the next GATE message for ONU_1. In the SMA algorithm, the OLT assumes a minimum TS for the ONUs of which the REPORT messages have not arrived at the time of decision. When the REPORT messages from ONUs arrive, we determine the grant time of the next (in cyclic order) ONU. Using the latest determined grant time of the ONU *k*, we can calculate the minimum time epoch $\left(MT_p[i+1]\right)$ at which the $(i+1)^{th}$ GATE message to the pth ONU is transmitted and is formulated by

$$MT_p[i+1] = GT_k[i+1] + rtt[k] - rtt[p] + \Delta \qquad (2)$$

where *rtt[p]* is the round trip time of the pth ONU and Δ is the minimum TS of the remaining ONUs (ONUs for which the REPORT has not arrived) as shown in Figure 5.2b. Note that, the actual TS of the remaining ONUs is (Δ+Υ). From Figure 5.2b, we can see that the sleep percentage (*SP*) of an ONU is T_S / T_G. Logical point-to-point systems like WDM-PON, PtP, and AON will not suffer from the impairments due to wake up time prediction. To the best of our knowledge, for logical point-to-point systems, no other algorithm has been proposed to exploit the sleep mode functionality. Nevertheless, even for the logical point-to-point systems, the SMA algorithm achieves high power efficiency without adding a high complexity. However, for future research, the DBA algorithms focused on logical point-to-point systems can be used for the analysis of their *PC*.

5.5.2 Assumptions

We have simulated considered NGOA architectures using the OPNET simulation environment and employing the DBA algorithm as explained in section 5.5.1. Service quality is considered as an important requirement with sleep mode scheduling [7] and the SMA scheduling fulfills this requirement. For the study, we have assumed a symmetric upstream and downstream data rate (R_D) between 0 and 100 Mb/s, in line with [9]. To meet this end, 1:8, 1:16, and 1:64 split are chosen for EPON, 10G-EPON and TWDM-PON, and 40G-TDMA-PON respectively. We have assumed the reach of 60 km, the buffer size of 5 MB, and three durations of cycle lengths: short (5 ms), moderate (20 ms) and long (100 ms). Different cycle lengths are adopted to study the effect of QoS requirements in energy efficiency. The shorter cycle lengths reflect the stringent QoS requirements. For long cycle lengths, we have assumed that digital components can be completely powered off; but at short and moderate cycle lengths, we have assumed the clock gating and the power gating approach. Overheads (T_o) in sleep and doze modes are assumed to vary with a $\pm 20\%$ deviation from the switching ON/OFF times given in Table 5.B. During transition period (i.e. active to sleep state), *PC* is assumed as half in active state. The synthetic user traffic is self-similar with a Hurst Parameter of 0.8 [16] and with a packet size varying exponentially in the form of Ethernet frames (64 to 1518 bytes). All ONUs are assumed to be uniformly loaded. Note that, though we have employed EPON based multi-point control protocol (MPCP) even for PtP, WDM-PON and AON, the overheads due to the use of MPCP are negligible, as these technologies have considerably higher line rates (1 Gb/s)

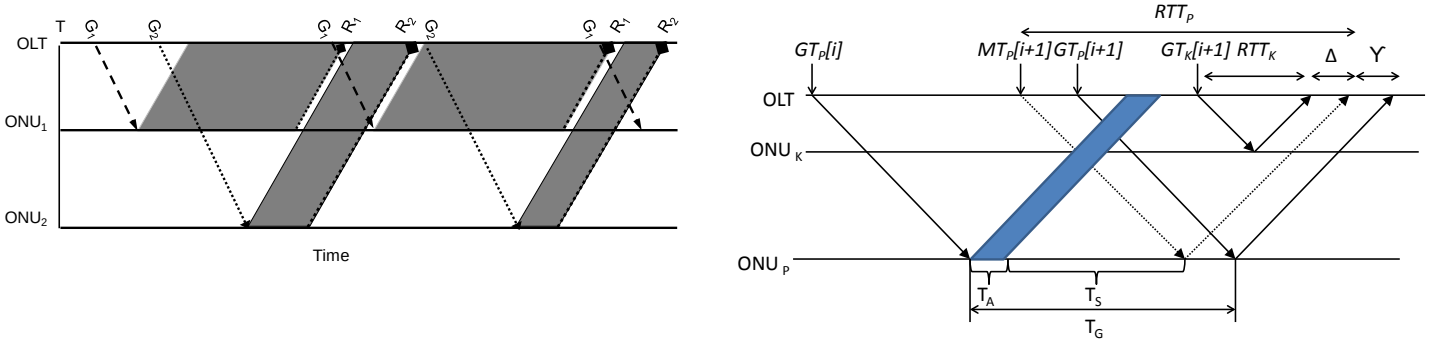

(a) (b)

Figure 5.2: (a) A TDMA-PON with an OLT and two ONUs showing REPORT (R_1 and R_2 for ONU_1 and ONU_2) and GATE (G_1 and G_2 for ONU_1 and ONU_2) messages transmission. (b) GATE prediction in the SMA algorithm

compared to the considered maximum data rate per user, and the overheads in scheduling only become significant at a heavy network load. Furthermore, the transmission of a MPCP control message requires only 0.512 µs, which is negligible compared to the sleep cycle lengths and the overheads of 1 ms due to continuous mode transmission.

5.6 Simulation results

In this section, we evaluate the *PC* of considered NGOA system concepts. We first discuss the *PC* in low power states and then in low power modes. Finally, we discuss the effects of low power modes on quality of service (QoS) performance and memory requirements.

5.6.1 Low power states

Figure 5.3 gives the *PC* of NGOA networks in low power states, viz. active, shedding, doze and sleep. The *PC* is split into the following parts: TRX, SoC, memory, SFBs, UNIs, power conversion inefficiency and a variable part. The variable part represents the extra *PC* that results from worst assumptions of power saving possible. For example, it represents the extra *PC* due to the worst estimates of the benefits of LPI [18], and the power savings that can be achieved by clock gating or power gating or power switching a digital processing block. For sleep state, the variable component is further divided into two parts to show the influence of fast and deep sleep. In fast sleep, not all the functionalities of a SoC can be turned off, and the SFBs cannot be completely powered off. Whereas in deep sleep, the SoC functionality can be essentially reduced to maintain an internal timer to wake up at its expiry or to respond to local stimuli like the off-hook condition, and all SFBs can be completely powered off. In addition, the contribution of the variable part is highest in 40G-TDMA-PON, as it has a significant power contribution from digital processing blocks like EDC and SoC. Because of variable power savings possible for digital processing blocks, the resulting power saving varies significantly. For example, for 40G-TDMA-PON, the *PC* of digital processing blocks can be reduced to zero if they are completely powered off at long cycle lengths or can be as high as 60% at short cycle lengths, where the large portion of a digital processing block has to remain awake for a faster switch on. The variable part for the best-case scenario will be zero. The system concepts are arranged according to ascending order of the active state *PC*. 40G-TDMA-PON has the highest *PC* in active state because of the use of OA, EDC, and the high downstream and upstream bit rates. The power shedding state minimizes the *PC* due to UNIs. Note that the *PC* of WDM-PON concepts in doze mode is same as PtP and AON, as it has similar receiver and other requirements. In sleep state, the *PC* due to the TRX becomes zero, and the considered technologies achieve a similar power consumption for deep sleep or

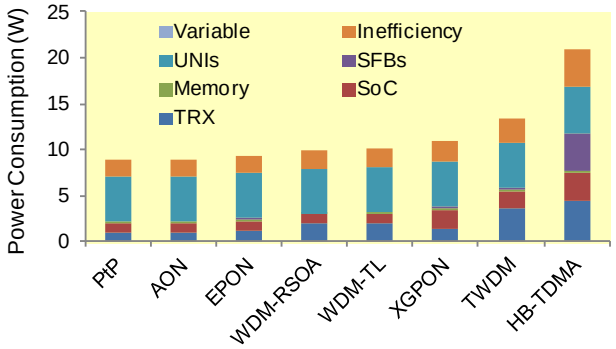

(a) Power consumption in active state

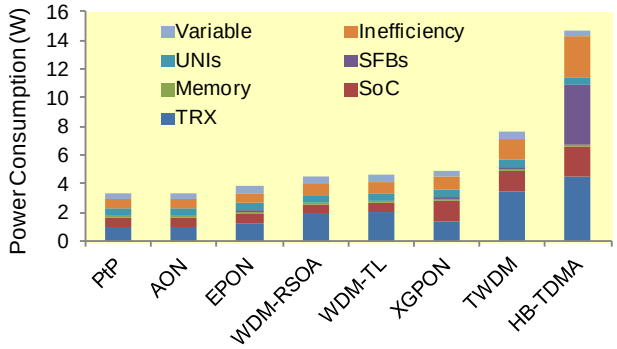

(b)Power consumption in power shedding

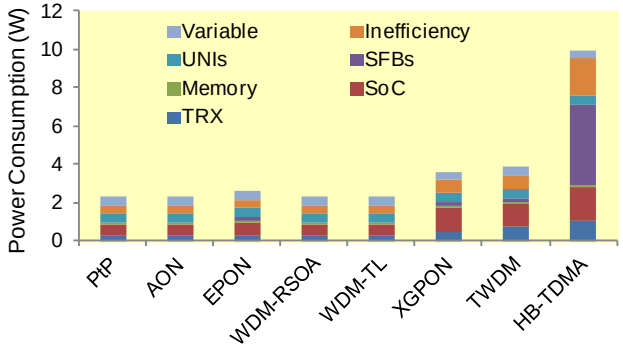

(c)Power consumption in doze state

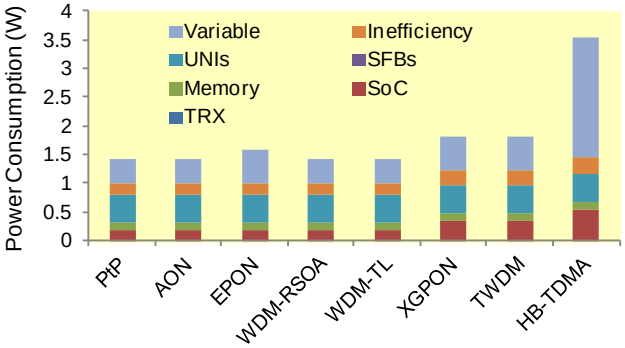

(d)Power consumption in sleep state

Figure 5.3: Power consumption of NGOA architectures in low power modes

at long idle conditions.

5.6.2 Low power modes

We investigate the *PC* of considered NGOA contenders in doze and sleep mode. Note that, the analysis corresponds to busy hour traffic conditions. Due to the continual increase in online behavior of users and the requirement that the lifeline telephone services should always be available [7], it is essential to evaluate the *PC* in busy hour traffic conditions. In the long idle periods, the *PC* of various contenders is the same as in deep sleep state shown in Figure 5.3d.

We show the *PC* as the split of four parts:

1) primary part, which includes the *PC* of TRX, SoC, memory, SFBs, and power conversion inefficiency;

2) data rate, which shows the variation in *PC* due to the variation in data rate;

3) overheads, which include the *PC* because of the variation in overheads assumptions; and

4) a variable part, which includes the *PC* because of the variation in the *PC* of UNIs and digital processing blocks.

Figure 5.4 shows the *PC* of various NGOA system concepts in doze mode. The *PC* performance is shown for short, moderate and long cycle lengths. The *PC* contribution due to overheads in NGOA system concepts employing the CM-TX is only significant at short cycle lengths. No significant *PC* variation is observed for the variation in cycle lengths. The power savings in doze mode are limited between 50 and 75%. It is easy to see that the *PC* in doze mode (P_{DM}) is a function of the *PC* in shedding state (P_{PS}), doze state (P_{DS}) and doze period (T_D) as :

$$T_D = T_{cycle}.(1 - \frac{R_D}{R_u} - \frac{T_o}{T_{cycle}}) \tag{3}$$

$$P_{DM} = P_{PS}.(\frac{R_D}{R_u} + \frac{T_o}{T_{cycle}}) + P_{DS}.(1 - \frac{R_D}{R_u} - \frac{T_o}{T_{cycle}}) \tag{4}$$

Figure 5.5 shows the *PC* and the power savings in sleep mode. The power savings in sleep mode are found to vary between 72 and 92%. The *PC* in sleep mode is largely impacted by the cycle lengths. The *PC* for all technologies will drop down with the increase in the cycle length. All technologies, however, will benefit differently. The technologies with BM transmission and reception are

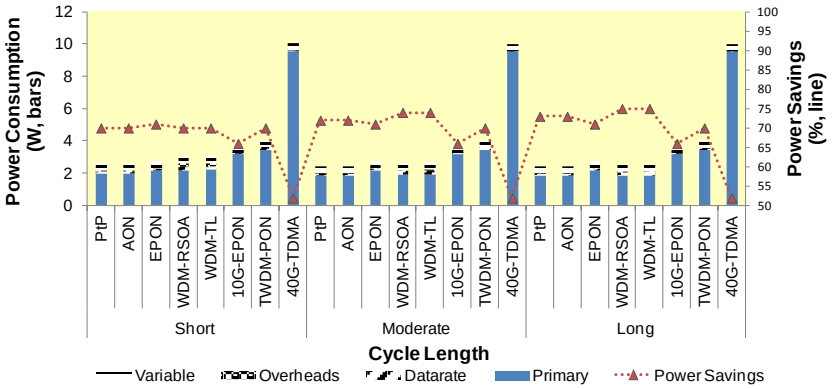

Figure 5.4: Power consumption (W) of various NGOA systems in doze mode during busy hours with three values of the cycle length: short (5 ms), moderate (20 ms) and long (100 ms). The part shown using bar patterns (excluding primary part) will be zero for the best case scenario

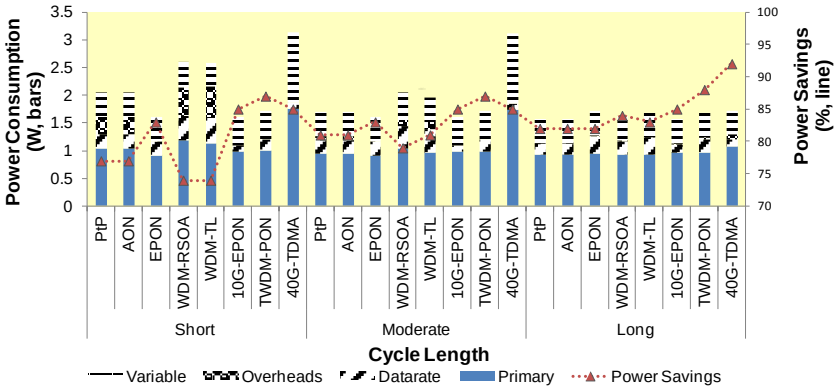

Figure 5.5: Power consumption (W) of various NGOA systems in sleep mode during busy hours with three values of the cycle length: short (5 ms), moderate (20 ms) and long (100 ms). The part shown using bar patterns (excluding primary part) will be zero for the best case scenario

found to benefit more. At short cycle lengths, CM-TX technologies will have an increased *PC* because of the effects of overheads. As the cycle length increases, the impact of overheads reduces. 40G-TDMA-PON has the highest *PC* at short and moderate cycle lengths because of the use of EDC and a high power consuming SoC. At long cycle lengths, the *PC* in sleep state is reduced as the large number of functional blocks can be powered off and the SoC functionality

reduces significantly. Note that, at short or moderate cycle lengths, the functionalities, like phase locked loop (PLL), are still maintained because of the requirement of shorter wake up times. Furthermore, because of the high downstream and upstream rate, 40G-TDMA can transmit and receive packets in the minimum time and can, thus sleep for the maximum period. Because of the combination of the maximum sleep time and the low *PC* in sleep state for long cycle lengths, 40G-TDMA-PON has a minimum *PC* at the long cycle lengths.

5.6.3 Effect on QoS parameters and memory requirements

We have seen that large power savings can be obtained by increasing the cycle length but the increase in cycle length also impacts the quality of service (QoS) performance. The queuing delay is an important QoS parameter, which increases with the cycle length. The increase in the cycle length also enlarges the queue size, which scales the memory requirements. From the simulations, we found out that the delay and the queue size increase linearly with the cycle length, and all NGOA systems exhibited the same increase in the delay and the queue size. Figure 5.6 shows the upstream queuing delay and the queue size (for upstream traffic at the ONU) variation with the cycle length and the data rate (H = high (100 Mb/s), L = low (1.5 Mb/s)). The queuing delay and queue size requirement for downstream traffic at the OLT was also found to be the same. There is another difference among the technologies. 40G-TDMA, TWDM, and 10G-EPON have a higher downstream data rate (> 1 Gb/s), but have UNIs with only 1 Gb/s capability. Hence, either UNIs need to be scaled to higher bit rates or the downstream traffic has to be buffered at the ONU. The UNIs with higher bit rates have significantly higher power dissipation, and hence buffering is a preferred solution. For 40G-TDMA, where the effect of buffering is most severe, there is the additional queuing delay of 2 ms and the increase in buffer size of 0.05 MB, which will have insignificant additional *PC*.

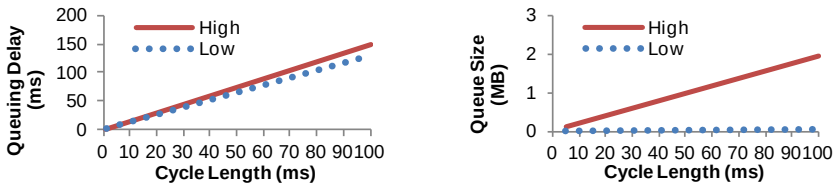

(a) (b)

Figure 5.6: (a) Queuing delay vs. cycle length (b) Queue size vs. cycle length. H (high = 100 Mb/s) and L (Low = 1.5 Mb/s) data rates are evaluated

5.7 Conclusions

Sleep and doze mode, which are proposed as a promising mechanism to reduce the power consumption of the customer premises equipment, are investigated for next generation optical access (NGOA) technologies like 40G time division multiple access (40G-TDMA) passive optical network (PON), wavelength division multiplexing (WDM) PON, hybrid TDMA/WDM PON (TWDM-PON), point-to-point (PtP) and active optical network (AON). In active state, the power consumption profile of the considered technologies varies significantly and is shown in Figure 5.3a. By application of low power modes, the power consumption of the technologies can be reduced significantly. For long idle periods, the considered technologies achieve similar power consumption. However, during busy hours, the power consumption of the technologies depends upon the cycle length. During busy hours, doze mode can reduce energy consumption between 50 and 75%, whereas sleep mode can reduce energy consumption between 72 and 92%, and technologies with burst mode transmission and reception, like 40G-TDMA-PONs, TWDM-PONs, 10G-EPON, and EPON achieve a better power saving compared to continuous mode transmission and reception technologies like WDM-PON, AON and PtP.

Acknowledgements

The research leading to these results has received funding from the European Community's Seventh Framework Programme (FP7/2007-2013) under grant agreement n° 249025 (ICT-OASE) and grant agreement n° 257740 (Network of Excellence TREND). We would also like to thank the GreenTouch consortium for its valuable feedback and suggestions.

References

[1] M. Pickavet, W. Vereecken, S. Demeyer, P. Audenaert, B. Vermeulen, C. Develder, D. Colle, B. Dhoedt, and P. Demeester, “Worldwide energy needs for ICT: the rise of power-aware networking,” in *IEEE Conference on Advanced Networks and Telecommunications Systems (ANTS)*, 2008.

[2] K. Hinton, J. Baliga, M. Feng, R. Ayre, and R. S. Tucker, “Power consumption and energy efficiency in the Internet,” *IEEE Network Magazine*, vol. 25, no. 2, pp. 6-12, 2011.

[3] A. Otaka, “Power saving ad-hoc report,” in *IEEE 802.3 av meeting*, 2008. Available at: http://www.ieee802.org/3/av/public/2008_09/3av_0809_otaka_1.pdf

[4] L. Shi, B. Mukherjee, and S. S. Lee, "Efficient PON with sleep-mode ONU: progress, challenges, and solutions," *IEEE Network Magazine*, vol. 26, no. 2, pp. 36-41, 2012.

[5] A. Dixit, B. Lannoo, S. Lambert, D. Colle, M. Pickavet, and P. Demeester, "Evaluation of ONU power saving modes in next generation optical access networks," in *European Conf. on Optical Communication (ECOC)*, 2012.

[6] B. Skubic, E. I. Betou, T. Ayhan, and S. Dahlfort, "Energy-efficient next-generation optical access networks," *IEEE Communications Magazine*, vol. 50, no. 1, pp. 122-127, 2012.

[7] ITU-T G-Series Recommendations-Supplement 45 (G. sup45), "GPON Power Conservation," 2009.

[8] GreenTouch: http://www.greentouch.org.

[9] Code of Conduct on Energy Consumption of Broadband Equipment, European Commission, v. 4, Feb. 10, 2011.

[10] 249025-ICT OASE Project, D4.4: Implementation and integration into new system concepts.

[11] SFP Multisource level agreement, Available at: ftp://ftp.seagate.com/sff/INF-8074.PDF

[12] E. Igawa, M. Nogami, and J. Nakagawa, "Symmetric 10G-EPON ONU burst-mode transceiver employing dynamic power save control circuit," in *Optical Fiber Communication (OFC)*, 2011.

[13] E. Wong, C. A. Chan, P. I. Dias, M. Mueller, and M. C. Amann, "Vertical cavity surface emitting laser transmitters for energy efficient broadband access networks," in *International Conference on Communications (ICC)*, 2012.

[14] S. W. Wong, L. Valcarenghi, Y. She-Hwa, D. R. Campelo, S. Yamashita, and L. Kazovsky, "Sleep mode for energy saving PONs: advantages and drawbacks," in *IEEE Global Telecommunications Conference (Globecom)*, 2009.

[15] L. Bolzani, A. Calimera, A. Macii, E. Macii, and M. Poncino, "Enabling concurrent clock and power gating in an industrial design flow," in. *Design, Automation & Test in Europe Conference & Exhibition*, 2009.

[16] K. Christensen, P. Reviriego, B. Nordman, M. Bennett, M. Mostowfi, and J. A. Maestro, "IEEE 802.3az: the road to energy efficient Ethernet," *IEEE Communications Magazine*, vol. 48, no. 11, pp. 50-56, 2010.

[17] G. Kramer, B. Mukherjee, and G. Pesavento, "IPACT: a dynamic protocol for an Ethernet PON (EPON)," *IEEE Communications Magazine*, vol. 40, no. 2, pp. 74-80, 2002.

6

Protection Strategies for Next Generation Passive Optical Networks -2

A process which led from the amoeba to man appeared to the philosophers to be obviously a progress though whether the amoeba would agree with this opinion is not known.

−BERTRAND RUSSELL

Reliability is another requirement for optical access networks. In this chapter, we propose cost-effective reliable architectures for NG-PON2.

Abhishek Dixit, Mozhgan Mahloo, Bart Lannoo, Jiajia Chen, Lena Wosinska, Didier Colle, Mario Pickavet

Published in Proceedings of Optical Network Design and Modeling, 2014[29]

[29] Compared to publication in ONDM, additional footnotes (30, 31, 32, 35) are added in this chapter.

Abstract: Next Generation Passive Optical Networks-2 (NG-PON2) are being considered to upgrade the current PON technology to meet the ever increasing bandwidth requirements of the end users while optimizing the network operators' investment. Reliability performance of NG-PON2 is very important due to the extended reach and, consequently, large number of served customers per PON segment. On the other hand, the use of more complex and hence more failure prone components than in the current PON systems may degrade reliability performance of the network. Thus designing reliable NG-PON2 architectures is paramount. Moreover, for appropriately evaluating network reliability performance, new models are required. For example, the commonly used reliability parameter, i.e., connection availability, defined as the percentage of time for which a connection remains operable, does not reflect the network wide reliability performance. The network operators are often more concerned about a single failure affecting a large number of customers than many uncorrelated failures disconnecting fewer customers while leading to the same average failure time. With this view, we introduce a new parameter for reliability performance evaluation, referred to as the failure impact. In this paper, we propose several reliable architectures for two important NG-PON2 candidates: wavelength division multiplexed (WDM) PON and time and wavelength division multiplexed (TWDM) PON. Furthermore, we evaluate protection coverage, availability, failure impact and cost of the proposed schemes to identify the most efficient protection architecture.

6.1 Introduction

The bandwidth requirements of the end users are on increase, which brings the need for next generation passive optical networks 2 (NG-PON2). The PON technology uses an optical line terminal (OLT) at the central office (CO) and an optical network unit (ONU) at the user's premises, connected through an optical distribution network (ODN) in a tree topology. The two important candidates of NG-PON2 are wavelength division multiplexed PON [1] (WDM-PON) and time and wavelength division multiplexed PON (TWDM-PON) [2], [3]. These two flavors are chosen by the full service access network (FSAN) group [3]: TWDM-PON as the primary candidate of NG-PON2, and WDM-PON as the secondary candidate of NG-PON2 when a high quality of service (QoS) is required.

WDM-PON increases the capacity of the current PON solutions (mainly time division multiplexed (TDM), e.g., EPON, GPON, XGPON) by using a wavelength layer in conjunction with a passive ODN. Out of many flavors of WDM-PON, we assume wavelength routed WDM-PON, using an arrayed waveguide grating (AWG) in the remote node (RN) to multiplex/demultiplex wavelengths and route a wavelength pair (up- and downstream) to each ONU. WDM-PON gives a dedicated wavelength to a user, alleviating complexity of

TDM and assuring a high QoS. However, the users may not permanently need this high dedicated bandwidth and thus, it could be better shared among users. TWDM-PON accomplishes that by sharing the capacity of a WDM-PON in time domain (i.e., using TDM). TWDM-PON utilizes a power splitter (PS) at the RN, which broadcasts wavelengths to all ONUs. Since multiple wavelengths are available at ONUs, tunable receivers are required.

NG-PON2 faces more challenges in achieving a high reliability performance than the conventional PON as it has longer fiber lengths with a higher fiber cut probability, there are more customers on a single PON segment, and it includes components with a higher complexity (tunability etc) and thus with a poorer reliability performance. Moreover, the level of protection required depends upon the user's profile. Businesses are run over fully protected networks and business users like to have full protection coverage [4]. Generally, there is a service level agreement (SLA) between business users and network providers by which the latter have to pay a penalty for service interruption. Thus, network providers like to minimize this penalty by increasing protection for business users. Protection involves duplicating facilities like optical fiber paths, OLT cards, IP capacity and others. If all facilities are duplicated, the cost per user increases significantly. This large incremental cost hurts the interest of residential users who prefer low cost of service. Thus, while providing high protection coverage to business users, the residential users must be shielded from a high cost increase.

Our previous works in [5] and [6] focus on the efficient protection schemes for TWDM-PONs. In this paper, we propose reliable architectures (section 6.3) for both WDM- and TWDM-PON and evaluate (section 6.4) reliability performance and cost of the proposed architectures. In addition, we propose a new metric for reliability performance evaluation, referred to as failure impact (FI) (section 6.2).

6.2 Parameters for reliability performance evaluation

In this section, we discuss the four parameters considered for the reliability performance measurement: protection coverage, availability, FI and cost.

6.2.1 Protection coverage

Protection coverage measures the percentage of duplicated architectural elements (i.e. components and fibers). If all elements are doubled, the network has a protection coverage of 100%. As some elements will only be duplicated for business users, the protection coverage will be different for business and residential users.

6.2.2 Component and connection availability

Asymptotic availability is defined as the probability that a component is operable at an arbitrary point of time and can be expressed as:

$$A = 1 - \frac{MTTR}{MTBF} \tag{1}$$

with MTTR = mean time to repair, MTBF = mean time between failures.

Connection availability means the probability that a logical connection (e.g. between the OLT and ONU) is operable. The desired value of the availability depends on the network operator and the customers in operation. However, as the aggregation networks are built with an availability of 'four nines' [7], we feel that a similar availability is sufficient for NG-PON2 networks.

6.2.3 Failure impact (FI)

Besides availability, we consider another resilience parameter, namely the failure impact (FI), which is an improvement over the figure of merit (FOM) introduced in [8] and the failure impact robustness (FIR) introduced in [6]. The parameter provides a weight to the number of failures in the network, thus modeling the impact of a failure in an irrational environment, where a network operator is worried more about a big failure disconnecting all clients for 1 hour at the same time (negative release on press, newspapers, TV leading to bad publicity) than for multiple small failures throughout the year disconnecting every client for 1 hour on average.

Impact of a failure in a rational environment [9] is proportional to the number of customers disconnected by the failure, N, and the unavailability of the component, U. E.g., Case 1: N =1000 customers, $U = 10^{-5}$; Case 2: N =100, $U = 10^{-4}$ have the same rational impact. This leads to the definition:

$$\mathrm{FI} = N \times U \tag{2}$$

To model the impact of failures in an irrational environment, we assume that all failures are statistically independent and all failures have a binary consequence: connection is fully disconnected (0) or not (1), no intermediate situations are considered. The FI[30] in an irrational environment is given by:

[30] An interesting extension to this formula can be to give more weight to the duration of failures by adapting U, as one failure of 10 s can be worse than 10 failures of 1 s.

$$\mathrm{FI} = N^{\alpha} \times U \tag{3}$$

where α > 1 (growing α leads to more and more irrationality) and α = 1 is the rational situation. The parameter α denotes "irrationality" in the behavior of network operators and cannot be determined by analytical interpretations. Models studying the psychological attributes of human behavior can be used to indicate the value of α. E.g., Case 1: N =1000 customers, $U = 10^{-5}$; Case 2: N =100, $U = 10^{-3}$ have the same irrational impact (if α =2). In case of different non-simultaneous events, the impact of these events can be summed, leading to additivity. Note that we also could define the FI as: $\mathrm{FI} = N \times U^{1/\alpha}$, but then we would lose the additivity characteristic.

The generalized function for failure impact can be deduced as: $\mathrm{FI} = \mathrm{f}(N) \times U$, with $\mathrm{f}(N)/N$ monotically growing in N, and when α (factor of irrationality) =1, f*(N)* = *N*.

6.2.3.a Impact of combination of errors:

To investigate the effect of a combination of errors, let us assume that there are two events f_1 and f_2, with unavailability U_1 and U_2, and the number of customers being affected as N_{1s} and N_{2s} respectively when the events occur separately and the number of customers being affected as N_p when the two events occur simultaneously.

The impacts of errors when they occur separately are FI_1 and FI_2 respectively and can be given as:

$$\mathrm{FI}_1 = N_{1s}^{\alpha} \times U_1 \times (1 - U_2) \tag{4}$$

$$\mathrm{FI}_2 = N_{2s}^{\alpha} \times U_2 \times (1 - U_1) \tag{5}$$

If they occur simultaneously, the FI is:

$$\mathrm{FI}_3 = N_p^{\alpha} \times U_1 \times U_2 \tag{6}$$

By combining eq. (4), (5) and (6), the total FI[31] is given as:

[31] The total FI will be a measure of general failure impact, which will be a straight sum of FI's associated with the individual faults.

$$\mathrm{FI}_{Total} = N_{1s}^{\alpha} \times U_1 \times (1-U_2) + N_{2s}^{\alpha} \times U_2 \times (1-U_1) + N_p^{\alpha} \times U_1 \times U_2 \quad (7)$$

Assuming $U_1 \times U_2 \approx 0$, and $1-U_i \approx 1$, the total FI is:

$$\mathrm{FI}_{Total} \approx N_{1s}^{\alpha} \times U_1 + N_{2s}^{\alpha} \times U_2 = \mathrm{FI}_1 + \mathrm{FI}_2 \quad (8)$$

We can apply this definition of the FI to more specific examples. Let us first consider two parallel links, with unavailability U_1 and U_2, protecting N customers. In case of parallel protection, since no customer is affected by a single failure $N_{1s} = 0$, $N_{2s} = 0$, and $N_p = N$. Thus eq. (7) could be expressed as:

$$\mathrm{FI}_{Total} = N^{\alpha} \times U_1 \times U_2 \quad (9)$$

Let us now consider two serial links with unavailability U_1 and U_2 and the number of customers connected to each link as N_1 and N_2 respectively. For simplicity, let us again assume that $N_1 = N_2 = N$. In case of serial connection, $N_{1s} = N_{2s} = N_p = N$. Thus, eq. (7) reduces to

$$\mathrm{FI}_{Total} = N^{\alpha} \times (U_1 + U_2 - U_1 \times U_2) \quad (10)$$

6.2.4 Cost

The primary incentive of protection for network operators is a huge cost that they otherwise have to pay, especially to business users, in the form of a penalty for a loss of service in an event of a failure. Resilient networks increase network availability and hence reduce this penalty, which is a part of the operational expenditures of the network. However, protection also increases other components of costs, like cost due to duplicated network equipment, infrastructure and others. The optimal resilient scheme is the one that minimizes the total cost of ownership of the network.

There are primarily two components of costs: capital expenditures (CAPEX) and operational expenditures (OPEX). CAPEX involves cost in network equipment, equipment installation and network infrastructure.

Network equipment: It is the cost due to passive or active equipment like an

OLT, an ONU, an AWG and a PS.

Equipment installation: It is the cost required in installing network equipment, which depends upon the number of technicians, the time to install and the travelling time. Note that this cost will not differ for a protected or unprotected case, and thus is not considered.

Network infrastructure cost: It is the cost in installing fiber, which accounts for costs due to trenching, cabling, splicing etc.

OPEX involves the cost related to the maintenance of the network and is strongly dependent on the operating horizon (T_s), i.e., the time span for which a network is operable. It includes costs due to failure reparation, power consumption, floor space, and penalty paid to business users during an event of a failure. Note that except for penalty costs, all the other costs could increase with protection.

Failure reparation: The failure reparation cost (C_{FR}), which involves the cost required in changing the equipment (or repairing the fiber) and the technician cost, depends upon how often a failure happens ($T_s/MTBF$)[32], the equipment/fiber cost C_E, mean time to repair (MTTR)[33] and the technicians' salary (S_T).

$$C_{FR} \approx \frac{T_s}{MTBF}(C_E + MTTR \times S_T) \tag{11}$$

Power consumption: The cost of power consumption of a component is evaluated as the product of power consumption P_E of a component, the cost of using power C_P, and the time span.

$$C_{PC} = P_E \times C_p \times T_S \tag{12}$$

Floor space: The OLT's equipment occupies a space in the CO for which a yearly rental has to be paid. To evaluate this cost, we have to find out the slot space that each component requires within an OLT rack. From the knowledge of the size occupied by the rack, we can calculate the total area per CO, which determines the yearly rental.

Penalty: Cost penalty paid to a user depends upon the connection unavailability, operating horizon, and cost penalty paid to a user per hour to

[32] Note that this is a good approximation (due to short T_s) for the expected number of failures.
[33] MTTR only includes repair and travelling time of the technicians.

compensate service interruption ($\overline{P}$).

$$C_{Pl} = U \times T_s \times \overline{P} \tag{13}$$

6.3 Reliable architectures

To understand the reliability performance in the context of NG-PON2 architectures, first, we present the results of the analysis of the unavailability of various components in Figure 6.1. The feeder fiber (FF) has the lowest availability and thus the basic protection strategy is to protect the FF. After the FF, the OLT has the worst availability and it should be protected. Both OLT and FF affect all customers and should be primarily protected. On the other hand, other PON segments do not affect all customers, and thus should only be protected for business users. Based on this learning, we consider four protection schemes for WDM- and TWDM-PON.

6.3.1 Protection scheme A

In protection scheme A (Figure 6.2a), the FF is protected, which affects both business and residential users. Additionally, for business users, its distribution fiber (DF) and the ONU transceiver are also protected; the ONU transceiver, being an active element, has a high unavailability.

This configuration requires an extra switch (Sw) at the OLT, whose configuration differs for WDM- and TWDM-PON. For WDM-PON, the switching to a protected fiber (PF) is not that straightforward. When switching from one feeder fiber port of the 2:N AWG at the RN to the second (and given that these are adjacent ports of an M:N device), while keeping the OLT wavelengths the same, a wavelength shift by one channel occurs at all AWG fan-out ports in the downstream direction. By default, then, the downstream signals would be routed to the wrong ONUs. In the upstream direction, the second feeder fiber port would remain dark if the ONUs retained their original working wavelengths. The second feeder fiber can be lighted correctly and the downstream wavelength shift can be compensated by *re-tuning* both the OLT and the ONUs by one channel. The retuning of the wavelengths at the ONUs can be accomplished by using embedded communication channels (ECC). We propose the switch for WDM-PON (Figure 6.2) consisting of two mechanical switches. The two input ports are needed to collect wavelengths from two different output ports of the multiplexer (which is also an AWG) at the OLT.

For TWDM-PON, a possible configuration of the switch may use an EDFA with a mechanical fiber switch. Using a simple 3 dB splitter will corrupt the data on the FF and PF.

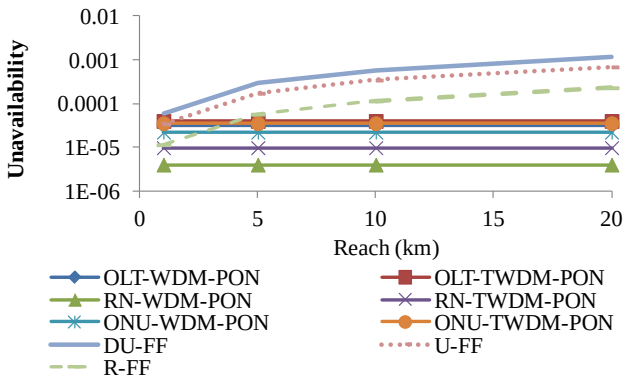

Figure 6.1: Unavailability of various elements of WDM- and TWDM-PON. The unavailability numbers are from [10]

6.3.2 Protection scheme B

In protection scheme B (Figure 6.2b), both the OLT and the FF are protected for all users. As in scheme A, a business user has an additional protection of the DF and ONU transceivers. A backup OLT is used to protect *N* OLTs to save the protection cost. We assume a dual-parented (or dual-homed) approach to protect the OLT, in which the working and backup OLTs are geographically separated. This provides a higher level of reliability performance because it leads to independent power outage failures and increases the network reliability performance against local disasters. Moreover, the PF follows a disjoint geographical route to provide maximal protection against a cable cut, and thus, any cost savings because of the two OLTs at the same physical location (duplex approach) are minimal. Dual-parented scheme needs inter-OLT signaling to control the switching for protection. The OLTs are already interconnected through the aggregation network, which facilitates the inter-OLT signaling.

We assume full OLT duplication, including components such as switch, power supplies, and booster/preamplifier, because of the low availability of these active components. We also consider OLTs being directly connected to FFs. Note that they could always be connected through a 3dB splitter. However, the latter scheme needs an additional coupler, degrades the connection availability and FI, and requires extra fibers for a dual parented scenario.

6.3.3 Protection scheme C

Protection scheme C (Figure 6.2c) provides 100%[34] protection coverage for

[34] It can also be argued that protection schemes C and D do not achieve 100% protection coverage as all components are not 100% duplicated, e.g., fiber switch in an ONU is not duplicated. However, the protection coverage provides a quick estimate of the network reliability performance and obviously

business users, by providing two duplicated parallel network segments. However, this approach is not beneficial for residential users as they have no protection. However as protection is only important for business users, this scheme is optimal to provide 100% protection coverage to business users and cheap access to residential users.

6.3.4 Protection scheme D

Protection scheme D (Figure 6.2d) provides 100% protection coverage to business users, and OLT and FF protection for residential users. The scheme uses two extra PSs before the remote node.

6.4 Architectural evaluation:

6.4.1 Evaluation methodology

The evaluation methodology involves calculating the availability, FI, and costs for the various technologies. The cost, MTBF, MTTR and power consumption values are taken from [10]. WDM- and TWDM-PON are assumed with a fan out of 32 and 512 respectively. The cost of penalty is assumed as 2 cost units (CU) per hour, where a CU denotes the cost of a GPON ONU. The parameter α is chosen as 2. The population of business users is assumed as 20%. For evaluating the infrastructure cost, a standard geometrical model like the Manhattan model is adopted and the design parameters are considered as in [11]. For modeling the floor space, we assumed a model presented in [11]. The availability and FI are calculated for three scenarios: dense urban (DU), urban (U), and rural (R). Besides, we also considered the performance for both business users (BUs) and residential users (RUs). The assumed lengths for the FF and PF and downtime are given in Table 6.A.

Table 6.A: Parameters of fiber lengths in different populated scenario: dense urban (DU), urban (U) and rural (R)

Scenario	DU	U	R
Downtime (h)	0.5	0.3	0.1
Working path	1	4	9.5
Backup path	3.5	12	28
Distributed Fiber	1.5	2.5	3.5

does not respond to every minor intricacy.

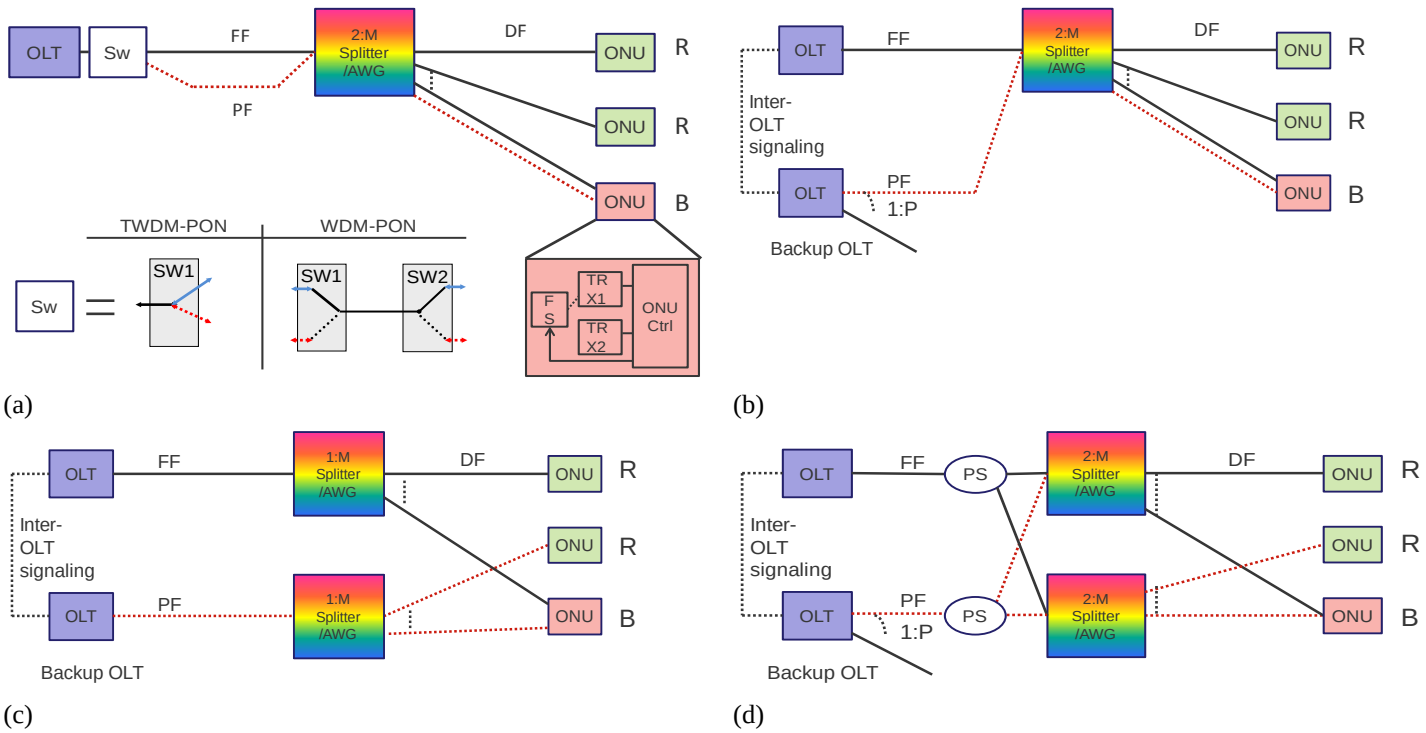

Figure 6.2: Protection schemes for WDM- and TWDM-PON. R = Residential users, B = Business users. Solid black line denotes FF and dashed red line denotes PF[35]

[35] A configuration where a 3 dB coupler is used before the RN, instead of a 2:M RN, was considered in [5].

6.4.2 Results

First, we present the protection coverage of different schemes (Figure 6.3). The protection schemes achieve the same protection coverage for WDM- and TWDM-PON. As the protection scheme moves from A to D, the protection coverage increases for business users, and the protection schemes C and D achieve 100% protection coverage. The protection scheme C, however, does not offer any protection to residential users.

The unavailability of various schemes in WDM- and TWDM-PON is shown in Figure 6.4 for three population densities. The urban scenario has the lowest availability because of a combination of longer fiber lengths (compared to dense urban) and fiber downtime (compared to rural). There is no significant difference (limited to 3×10^{-5}) between the availability of WDM- and TWDM-PON; however, WDM-PON has a slight edge, which can be attributed to more complex tunable ONUs used in TWDM-PONs. The protection schemes from A to D decrease the unavailability for business users. The protection schemes achieve an availability of more than four nines for business users, with a best case availability of 0.99998.

The FI is shown in Figure 6.5 for WDM-and TWDM-PON for three population densities. It is calculated for the total network and cannot be differentiated for residential or business users.

The FI now clearly differentiates between WDM- and TWDM-PON. Even though WDM- and TWDM-PON have nearly the same availability, TWDM-PON has a FI about 200 times higher than WDM-PON. This is due to a high customer aggregation (512) in TWDM-PON, which makes it vulnerable to large impacts. An interesting observation about the FI and its relation to α can be seen in Figure 6.6. Here we show the FI of various protection schemes relative to the

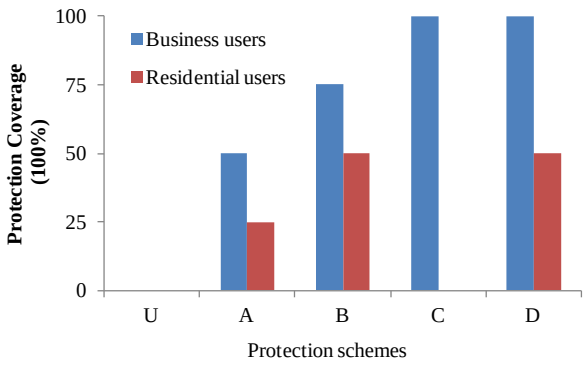

Figure 6.3: Protection coverage of different schemes for WDM- and TWDM-PON

unprotected scheme with varying α. Obviously all protection schemes decrease the FI, but the difference in the protection schemes generally broadens with more irrationality. Also, some protection schemes perform better with increased irrationality, e.g., scheme C has a lower FI than scheme B for a larger α. This can be attributed to a possible complete network black out in scheme B compared to scheme C where business customers are double protected.

The total cost per total number of users in the different protection schemes is evaluated in Figure 6.7. How this cost is to be distributed among business and residential users will depend upon the business models. The analysis is done for the DU scenario. The choice of the scenarios does not significantly affect the relative results. We evaluated six components of the cost: penalty, floor space, power consumption, failure reparation, infrastructure, and equipment. The cost for penalty forms the significant portion of the total cost and decreases as

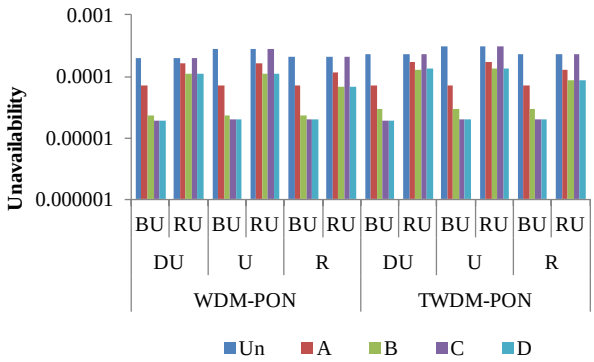

Figure 6.4: Unavailability of different schemes for WDM- and TWDM-PON

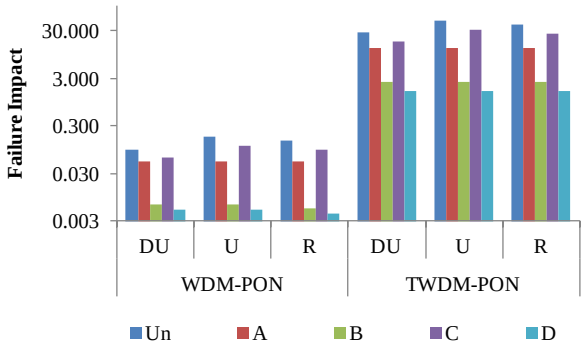

Figure 6.5: Failure impact (FI) of different schemes for WDM- and TWDM-PON

protection coverage increases. For these results, the penalty paid to residential users is neglected. However, as the dependence of users on the Internet is growing, the network operators may be forced to pay a penalty to even residential users, incentivizing the network protection even more. All other components of costs increase as the level of protection increases from A to D, note the logarithmic scale of the y-axis. Emphatically, the total cost per user decreases with the increased level of protection, when operators pay a reasonable penalty of about 2 CU/hour to business users. Clearly, this proves that there is a major incentive for network providers to implement protection. Of course, if there is no associated penalty with a failure, no protection is required. The breakeven point is at a penalty of 0.06 CU/hour, which is fairly low and asserts the need of protection for the cost effective deployment of access networks.

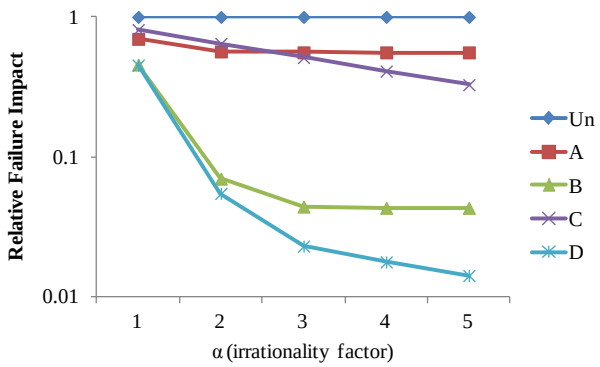

Figure 6.6: Failure impact (FI) of different schemes for WDM-PON with varying α

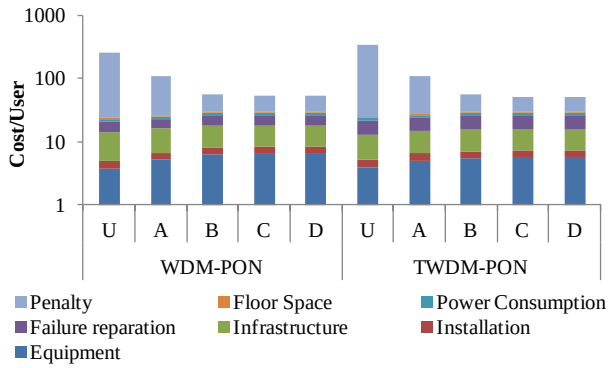

Figure 6.7: Cost (total network cost divided by the total number of users) evaluation of various WDM- and TWDM-PON architectures

6.5 Conclusions

We proposed four different protection schemes to improve reliability performance of two NG-PON2 candidate technologies: WDM- and TWDM-PON. The proposed schemes realize a protection level that varies from no protection to end-to-end protection for business users, and OLT and FF protection for residential users. We also proposed a new metric for reliability performance evaluation, namely failure impact. The proposed schemes are analyzed considering protection coverage, availability, failure impact and cost, in different populated scenarios. The analysis proves that unavailability, FI and the total cost of ownership is reduced significantly by the protection schemes. Of course, the cost is influenced by the penalty paid to business users for a loss of service, however, even for a meager cost penalty of ca. 0.06 CU/hour, the reliable architectures are mandated for a cost effective deployment. Although the unavailability of WDM- and TWDM-PON is nearly equal, we noticed a much higher failure impact for TWDM-PON because of its higher customer aggregation.

References

[1] K. Grobe, M. Roppelt, A. Autenrieth, J. P. Elbers, and M. Eiselt, "Cost and energy consumption analysis of advanced WDM-PONs," *IEEE Communications Magazine*, vol. 49, no. 2, pp. s25-s32, 2011.

[2] A. Dixit, B. Lannoo, G. Das, D. Colle, M. Pickavet, and P. Demeester, "Flexible TDMA/WDMA passive optical network: energy efficient next-generation optical access solution," *Optical switching and Networking*, vol. 10, no. 4, pp. 491-506, 2013.

[3] Y. Luo, X. Zhou, F. Effenberger, X. Yan, G. Peng, Y. Qian, and Y. Ma, "Time and wavelength division multiplexed passive optical network (TWDM-PON) for next generation PON Stage 2 (NG-PON2)," *IEEE Journal of Lightwave Technology*, vol. 31, no. 4, pp. 587 – 593, 2013.

[4] Business class services over a GPON Network, available at: http://www.fujitsu.com/downloads/TEL/fnc/whitepapers/BusinessClass-GPON.pdf

[5] A. Dixit, J. Chen, M. Mahloo, B. Lannoo, D. Colle, and M. Pickavet, "Efficient protection schemes for Hybrid WDM/TDM passive optical networks," in *IEEE International Conference on Communications (ICC)*, 2012.

[6] A. Dixit, B. Lannoo, D. Colle, M. Pickavet, and P. Demeester, "Trade-off between end-to-end reliable and Cost-Effective TDMA/WDM passive optical networks," in *International Congress on Ultra Modern*

Telecommunications and Control Systems and Workshops (ICUMT), 2012.

[7] M. Vogt, R. Martens, and T. Andvaag, "Availability modeling of services in IP networks," in *Design of Reliable Communication Networks (DRCN)*, 2003.

[8] J. Kim, S. Yen, S. Fu, and L. G. Kazovsky, "Resilient optical access networks: optimization on the number of spikes in the StarRing," *Workshop on Photonic Technologies for Access and Bio-Photonics*, 2011.

[9] M. Mahloo, A. Dixit, J. Chen, C. M. Machuca, B. Lannoo, D. Colle, and L. Wosinska, "Towards reliable hybrid WDM/TDM passive optical networks," *IEEE Communications Magazine*, vol. 52, no. 2, pp. S14-S23, 2014.

[10] OASE Project, D4.2.1: Technical assessment and comparison of next-generation optical access system concepts, 2011.

[11] M. Mahloo, C. M. Machuca, J. Chen, and L. Wosinska, "Protection cost evaluation of WDM-based next generation optical access networks," *Optical Switching and Networking*, vol. 10, no. 1, pp. 89-99, 2013.

7

Fiber and Wavelength Open Access in WDM-and TWDM Passive Optical Networks

Take risks; if you win, you will be happy; if you lose, you will be wise.

−PETER KREEFT

In this chapter, we propose the architectures to support open access in NG-PON2. We also extensively analyze the cost of the architectures.

Abhishek Dixit, Marlies Van der Wee, Bart Lannoo, Didier Colle, Sofie Verbrugge, Mario Pickavet and Piet Demeester.

Accepted in IEEE Network Magazine, 2014

Abstract - There has been a large global effort to innovate and design optical access technologies that can accommodate the requirements emerging from a colossal increase in data rates. Currently time and wavelength division multiplexed (TWDM) and wavelength division multiplexed (WDM) passive optical networks (PONs) have been foreseen as the main candidates for next-generation access systems. Due to current business modeling trends and possible regulatory obligations, these networks should also support open access, which refers to the sharing of a network infrastructure among different network entities in a non-discriminatory way. By sharing the (bottleneck) infrastructure facility, open access reduces the entry barrier for a network entity. This opens doors for a multi-provider scenario, which leads to competition among network players and can significantly reduce the price of services. Opening up the network, however, entails new architectures. In this paper, we propose novel architectures to support open access at fiber and wavelength level for WDM- and TWDM-PON. These architectures differ significantly in terms of their cost (capital and operational expenditures). We compare the proposed architectures with regard to their cost and analyze the impact of adoption levels (percentage of users subscribed) and customer churn rate (how often the customers change network provider) on the cost of the architectures.

7.1 Introduction

Open access [1] allows competition and as such supports new business models to make fiber- to- the-home (FTTH) networks an economically viable solution. FTTH networks deliver high bandwidth to customers, and thus are future-proof solutions. They, however, require a high initial investment to deploy fiber in the field, and it is not possible to recoup the investments made within the usual depreciation periods of e.g. 5 to 10 years. Hence, a natural solution is to share the network infrastructure (fiber and equipment) among multiple network entities, which ensures that not every network entity has to make huge capital expenditures (CapEx) before being able to serve users. This reduces the barrier for network entry, encourages competition, and consequently, reduces the price of services.

For its success, open access entails the sharing to be non-discriminatory, requires new business models and revenue-flow paths, and necessitates novel architectures to stimulate a multitude of services at the user's end in a seamless way. In this paper, we focus on architectural challenges to open a network.

Open access can be offered at different layers (section 7.3) depending on how a user selects a specific network entity, e.g., by selection of a fiber, wavelength, or a packet field (Ethernet address, VLAN tag, MPLS, IP). This classifies open access as fiber, wavelength, and bit-stream open access. While the first two flavors of open access require new architectures, the latter can simply be

implemented by providing a slice of network resources to a network entity. This slicing can be implemented at layer 2 (VLAN), layer 2.5 (MPLS) or layer 3 (IP) by emerging cutting-edge technologies like software defined networking and network virtualization [2]. Hence, the bit-stream open access can be implemented without adapting architectures, and consequently, is less challenging. This paper focuses only on fiber and wavelength open access, which require new architectures, but provide a higher degree of flexibility compared to bit-stream open access, as network entities are now free to appropriately design their own network, exerting a greater quality of service (QoS) control.

In this paper, we propose novel architectures (section 7.4) for fiber and wavelength open access in next generation access systems. We also evaluate the CapEx and operational expenditures (OpEx) of these architectures in section 7.5. In addition, we factor the variability in the cost evaluation due to different adoption levels (percentage of the users subscribed) and customer churn rate (how often the users change network provider). The basic principles, e.g., layers of open access, design characteristics of open access architectures, and cost methodology, are valid for a variety of PON technologies. Nevertheless, as specific examples, we choose time and wavelength division multiplexed passive optical network (TWDM-PON [3]) and wavelength division multiplexed PON (WDM-PON [4]), which have been chosen by the full service access network (FSAN) group as the candidates for next generation access systems, or next generation-PON2 in FSAN terminology.

7.2 Next generation-passive optical networks2 (NG-PON2)

WDM- and TWDM-PON scale sustained bandwidth per residential customers and will potentially serve as the candidates for NG-PON2. WDM-PON increases the capacity of the conventional PONs (mainly time division multiplexed (TDM), e.g., Ethernet PON, Gigabit-PON (GPON)) by using a wavelength layer in conjunction with a passive optical distribution network (ODN). Out of many flavors of WDM-PON, we assume wavelength routed WDM-PON, which uses a cyclic arrayed waveguide grating (AWG) in the remote node (RN, at the cabinet) to multiplex/demultiplex wavelengths and route a wavelength pair (up- and downstream) to each optical network unit (ONU, i.e., the equipment at the user's premises), see Figure 7.1. Cyclic AWGs allow access of different up- and downstream wavelength bands. The ONU uses a broadband receiver (to be able to receive any wavelength used by the WDM-PON) and a tunable transmitter to minimize the inventory of ONUs at different wavelengths.

TWDM-PON combines the flexibility of TDM in resource allocation with an added capacity of WDM. TWDM-PON uses a power splitter (PS) at the RN, which broadcasts wavelengths to all ONUs (Figure 7.1). The ONU now requires

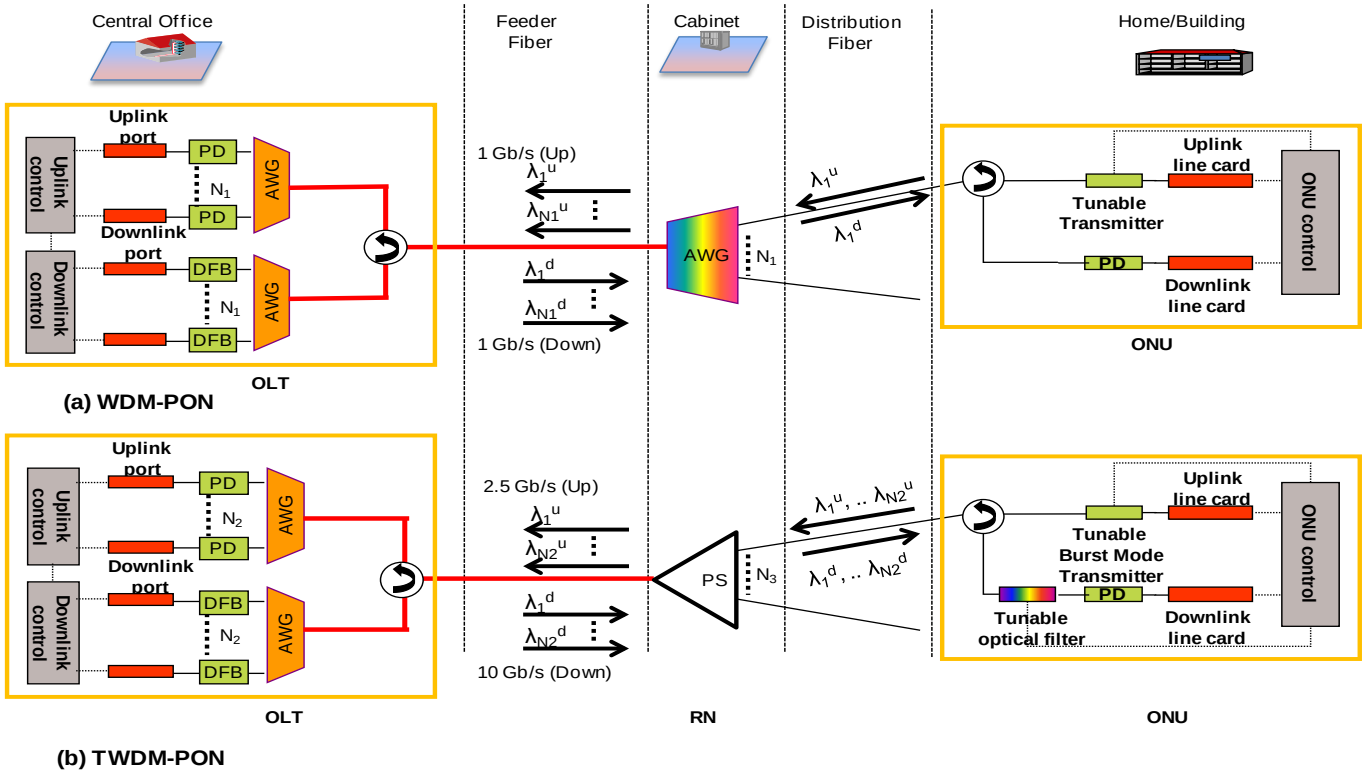

Figure 7.1: WDM- and TWDM-PON architectures. Abbreviations used in the figure: PD: photodiode, DFB: distributed feedback laser. In this paper, $N_1 = 32$, $N_2 = 4$, $N_3 = 512$

a tunable receiver and a security layer as multiple wavelengths are available at its input. Like a WDM-PON, it also uses tunable transmitters. This configuration of TWDM-PON is as standardized in ITU-T G.989.1.

7.3 Open access flavors

In open access, multiple network entities serve at different functional levels and thus do not bear the financial baggage of end-to-end network provisioning, especially in network infrastructure investment. Network provisioning can be conceptually separated into three roles, typically taken up by different entities:

- Physical infrastructure provider (PIP) − responsible for installation of the physical infrastructure (implying trenches, conduits, ducts, fiber, housing).
- Network provider (NP) − responsible for all active equipment between the users and the central office (CO), e.g., optical line terminals (OLTs, i.e., CO equipment) and ONUs.
- Service provider (SP) – supply of services (telephony, IPTV, broadband Internet, mobile backhauling) and installation of service specific equipment (e.g., set-top box for Digital TV).

This separation is based on the technical and economic nature of the roles [5]. For example, providing physical infrastructure requires high CapEx, low OpEx, and low economies of scale [5]. Network or service provisioning entails high OpEx and high economies of scale. For these cost markups, we refer the interested reader to [6]. Note that we have not assigned the role of providing passive equipment (such as PSs and AWGs) to any functional entity, as it depends on the specific open access scenario (see later).

These different functional entities – PIP, NP and SP – participate and coexist in an open access scenario. This warrants defining the interfacing between these functional players to assure compatible service delivery. Here, we can clearly identify two open access interfaces (OAI): PIP-NP and NP-SP. In the first interface, multiple NPs exist over a common PIP, and in the second, multiple SPs exist over a common NP. The latter interface can be opened by sharing logical space (OSI layer 2 and above) among different SPs by using an element on the OSI network layer 2 (Ethernet) or layer 2.5/3 (MPLS, IP), also referred to as bit-stream open access. The main challenge in bit-stream open access is to achieve SP isolation and to give each SP control over a resource slice. Otherwise, SPs and NPs will blame each other for a bad QoS performance. This problem is known as the “black box” problem and can be solved by using virtualization techniques.

Opening the PIP-NP interface is more complex as it involves adaptations in the architectures and introduces new components. This interface can be opened

on fiber and wavelength layer.

Fiber open access − Opening at the fiber layer means that a user selects an NP through a fiber. This provides access to different NPs at the RN, stimulating multiple NPs in the same geographical area, e.g., in the FTTH network of Amsterdam, where KPN and BBNed are both NP within the same geographical area, and in France, where a law [7] obliges the PIP to deploy multiple fibers to every building.

Wavelength open access − Opening at the wavelength layer means that a user can select an NP using one or more dedicated wavelengths. Wavelength open access can give access to different NPs at the RN or at the OLT. Currently, wavelength open access is actively considered in the Open Lambda Initiative [8].

7.4 Open access architectures for NG-PON2

We discuss architectures for fiber and wavelength open access in WDM- and TWDM-PON, according to the interface where the network is opened. The interface allowing open access makes a fundamental difference to the ownership of the network, and the characteristics of the NPs.

7.4.1 RN interface

We present architectures to open the network at the RN interface in Figure 7.2. There is no explicit difference between WDM- and TWDM-PON for opening at the RN interface. The network can be opened at the fiber level (Figure 7.2a) and (b)) or wavelength level (Figure 7.2c). To allow open access, the architectures may require an additional interface point, referred to as a point of unbundling (PoU). The PoU can be defined as the extra facility or the point where the extra facility is provided for enabling open access. We list the acronyms of used PoUs in Table 7.A.

Fiber open access: Figure 7.2a depicts a scheme in which each ONU has one distribution fiber (DF), which is shared among multiple NPs using the optical distribution frame (ODF) at the RN. Thus, every time a user wants to change its NP, fiber re-patching is required at the ODF, increasing OpEx. Clearly, the PIP should ensure that the access to the ODF is easy, i.e., the ODF should never be placed underground, etc. This scheme is preferred in the fiber-lean scenario, i.e., where spare fibers are unavailable in the duct, as it requires only a single DF per ONU.

In Figure 7.2b, each ONU has a dedicated DF to reach every NP and the selection of an NP is done through the fiber switch at the ONU. To support this, a fiber-rich deployment, i.e., where spare fibers are available in the duct, is needed. The cost for installing a couple of extra fibers is negligible [6] in comparison to the trenching and ducting costs, and should therefore be considered anyhow when setting up a deployment planning.

Table 7.A List of acronyms of PoUs

Abbreviations	Full Form
ODF	Optical Distribution Frame
DF	Distribution Fiber
WAF	Wavelength Access Filter
BS	Band Splitter
MWR	Manual Wavelength Router
PS	Power Splitter
WSS	Wavelength Selective Switches
FF	Feeder Fiber

In fiber open access, the PIP deploys only the fiber infrastructure and remains technology agnostic. This ensures freedom to NPs to choose its technology, possibly leading to heterogeneous NPs. Moreover, as the NPs have a separate fiber infrastructure, they have complete isolation from other NPs. However, the disadvantages are that sharing is limited to only fiber infrastructure and the migration of a user to a different NP can be restricted as it may entail changing users' equipment to adapt to a different technology.

Wavelength open access: Figure 7.2c presents a wavelength open access scheme, which uses a wavelength access filter (WAF) to provide access to different networks based on wavelengths. Different wavelengths (shown in the figure as λ_{1U}, λ_{1D}, λ_{2U}, λ_{2D}) are used by PON technologies for coexistence, here U and D stand for up- and downstream wavelength and 1 and 2 represent two networks. For example, GPON uses 1290-1330 nm (λ_{1U}, O band) for upstream and 1480-1500 nm (λ_{1D}, S band) for downstream transmission, whereas TWDM-PON will use a different band [3]. Thus, different PON technologies can be differentiated using a WAF, which is composed of WDM filters for up- and downstream direction. Wavelength open access works if the NPs use either different coexisting technologies or different wavelengths within the standard band. This is a promising option for a fiber-lean deployment with no re- patching required in the ODF.

As in fiber open access, the PIP remains technology agnostic and NPs can use heterogeneous technologies.

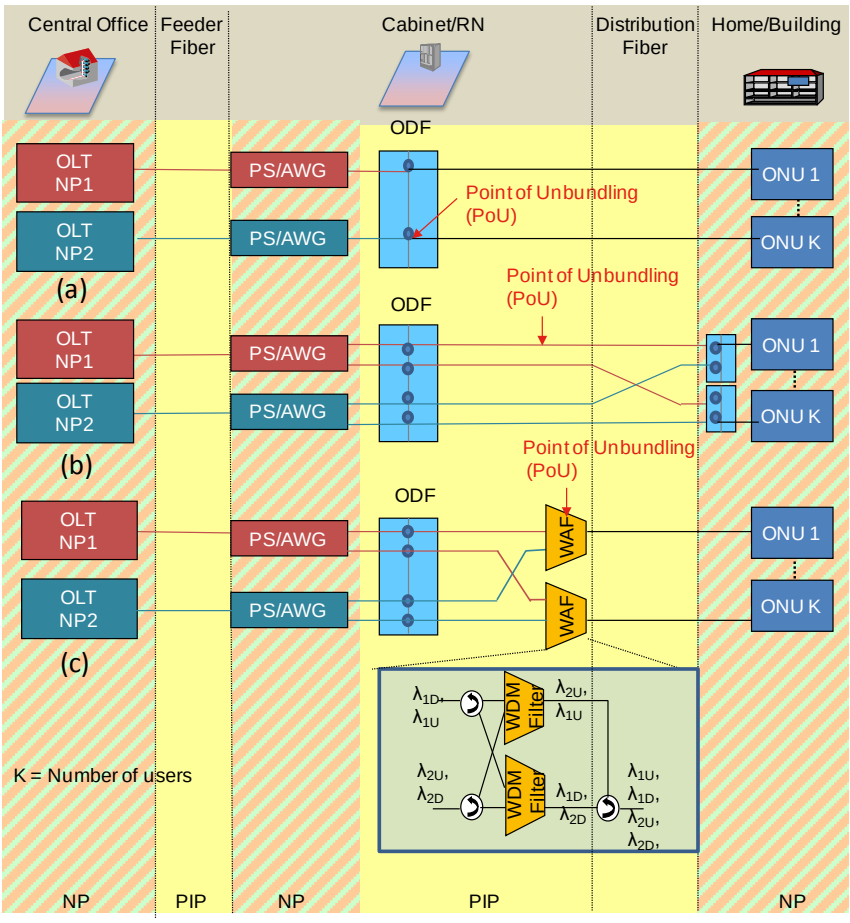

Figure 7.2: Open access schemes at the RN interface: a) Fiber open access (PoU = ODF) b) Fiber open access (PoU = DF, requires fiber-rich deployment) c) Wavelength open access (PoU = WAF). Different network players, PIP and NP, own different parts of the network, which is depicted using colored patterned segments

7.4.2 OLT interface

The OLT interface can be opened on the wavelength layer to allow NP-PIP interface (Figure 7.3 and Figure 7.4). The main differentiator with the options in Figure 7.2 is that now the PIP should own the entire passive infrastructure (physical infrastructure and passive equipment). This is because if one of the NPs owns passive equipment, it can leverage special benefits in its competition against other NPs due to its ownership of the passive infrastructure. Hence, for the access to be non-discriminatory, an actor should not be allowed to have an ownership of the facility that it is using to compete against other players. Moreover, as the PIP owns passive infrastructure, it does not remain technology agnostic; this confines all NPs to use a homogeneous technology, curbing their degree of freedom. The major advantage however is that it allows easier customer migration. As all NPs use the same technology, a user does not need to change its ONU and can switch NPs easily. As of today, the ONU may not be compatible with the equipment from another NP even if it uses the same technology; we, however, feel that for maximizing the advantages of open access, this inter-NP compatibility should be enforced by regulations.

To make the migration of users even easier, it is assumed that the wavelengths from every NP should reach every user. These architectures are impacted by the technology in consideration, and hence, they differ for WDM- and TWDM-PON.

WDM-PONs – We consider five likely options to implement a PoU in WDM-PONs: band splitter (BS), manual wavelength router (MWR), PS, wavelength selective switch (WSS), and feeder fiber (FF). Figure 7.3a presents the BS based wavelength open access solution for WDM-PON. The BS combines and distributes the spectrum for different NPs. Since the BS is a static splitter, the NPs are assigned a static chunk of spectrum that cannot be rearranged with a varying number of users per NP. To satisfy the condition that the wavelength from every NP can reach every user, a cyclic AWG is assumed at the RN with a free spectral range (FSR) equivalent to a wavelength band per NP. Cyclicity combined with limited FSR allows multiple wavelengths at the output port of an AWG, where each wavelength belongs to an NP. The FSR, and consequently fan out, should be limited to accommodate K wavelengths (K in the best case is N/M, where N is the number of wavelengths, and M is the number of NPs). Thus the number of users is now reduced by a factor M (the number of NPs), increasing the cost per user. Tunable receivers are assumed at the ONU to select the NP by tuning the receiver to the right wavelength. Note that in normal (no open access) WDM-PON, the transmitters are already tunable. The receiver, however, is a fixed broadband receiver.

Figure 7.3b presents the solution in which the PoU is an MWR. The MWR consists of a patch panel and a demultiplexer. Also, note that in this scheme,

transceivers from the OLT are connected directly to a patch panel, instead of combined first by a multiplexer. This is to avoid additional insertion losses in multiplexing and demultiplexing.

Figure 7.3c presents the solution in which the PoU can be a PS or WSS. Since an MWR, PS, or WSS can be flexibly configured, these solutions can dynamically allocate the spectrum among NPs. They also remove the need of tunable receivers at the ONUs. In these schemes, the selection of the NP is done by using the right wavelength at the NP. For example, if an ONU wants to move from NP_1 to NP_2, the NPs should appropriately rearrange their wavelengths usage. However, these solutions also have drawbacks. An MWR based solution requires fiber patching every time a user wants to switch and thus adds OpEx. The scheme with PS as PoU requires all NPs to comply with the maximum output power, wavelength grid, etc; otherwise, an NP can disrupt services of other NPs and violates inter-NP isolation. It additionally requires test equipment (not shown in the figure) and continuous monitoring of the data stream from the different NPs to ensure that all NPs comply with the requirements. The downside of WSSs based PoU is its active, expensive and failure prone characteristics.

To solve these problems, we propose a FF based open access solution in Figure 7.3d. It uses multiple FFs and an M: K AWG at the RN, requiring a fiber-rich scenario. Now all NPs can use the entire spectrum. The latent routing property of AWGs, i.e. the two same input wavelengths can never appear out from the same port, prevents any conflict concerning the spectrum use among NPs. The configuration allows every user to receive wavelengths from all NPs, and to tune to the right wavelength. However, the ONUs need to have tunable receivers.

TWDM-PONs − The TWDM-PONs can use the same PoU as WDM-PONs (Figure 7.4). However, for using FF based PoU, an additional AWG has to be used at the RN, as a PS collides the data on the same wavelength. In TWDM-PONs, the NP selection is always made by tuning the ONU to the right wavelength. TWDM-PONs experience another constraint in providing open access. The use of a PS at the RN raises security concerns among different NPs. A defective NP can now affect the services of other NPs and a user from a different NP can affect the services of users of other NPs, which makes inter-NP isolation not *per se* available in TWDM-PON. Figure 7.4c therefore presents the secure open access implementation to provide inter-NP isolation. For the illustration of this scheme, we use the FF based scenario as discussed before. However, the technique of providing network isolation can be used in conjunction with all PoU.

We use an interleave filter that creates separate NP space in combination with a PS. The users can access different NPs using a patch panel at the location of a building basement. This approach safeguards against a rogue (defective by

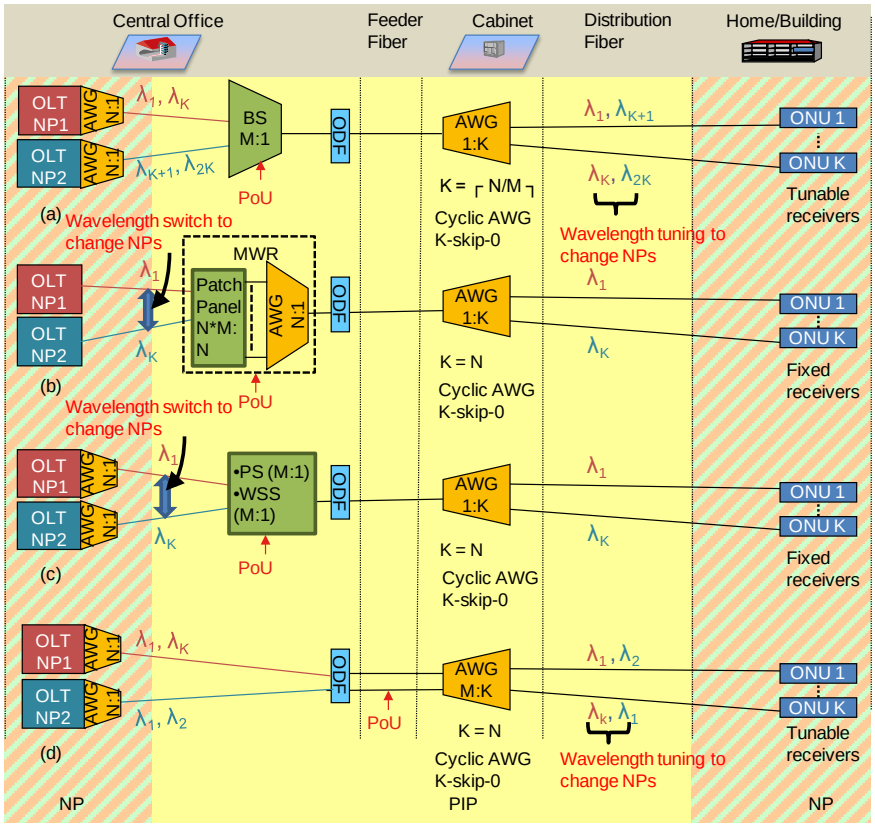

Figure 7.3: Wavelength open access schemes at the OLT interface for WDM-PON with point of unbundling (PoU) as: a) BS b) MWR c) PS/WSS d) FF, requires fiber-rich deployment. Wavelength mapping shows how OLT connects with ONU1 and ONUK and N = number of wavelengths; M= number of NPs; K = number of users

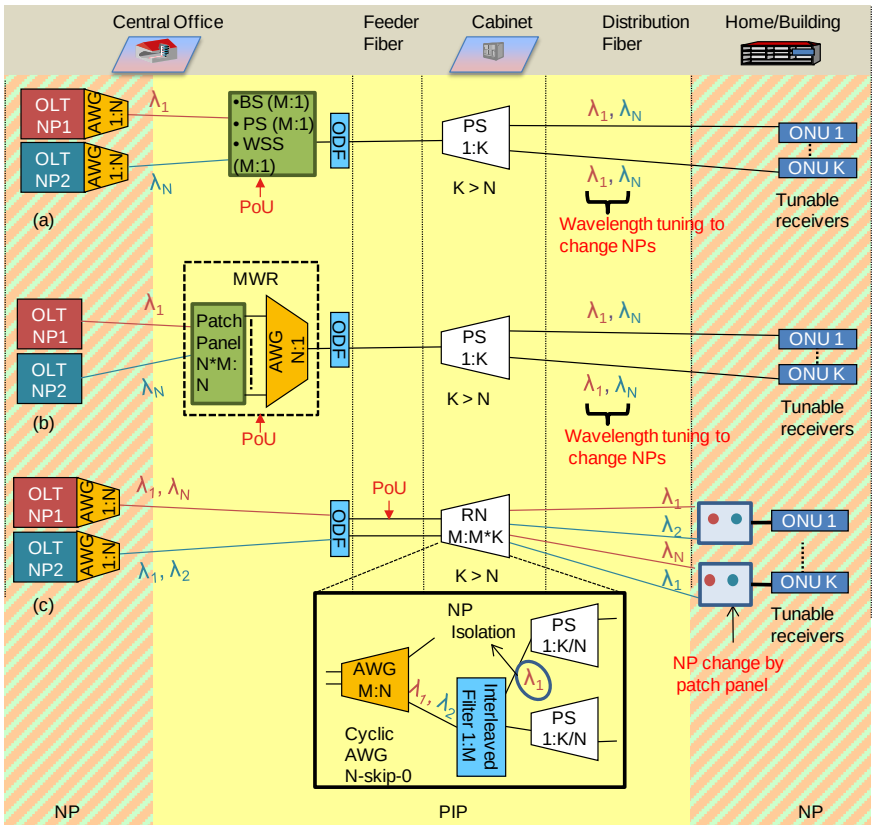

Figure 7.4: Wavelength open access schemes at the OLT interface for TWDM-PON with point of unbundling (PoU) as: a) BS/PS/WSS b) MWR c) NP isolation (requires fiber-rich deployment)

accident) user and provides higher security against malicious (defective by purpose) users. A malicious user can still theoretically affect the services of other NPs, but can be easily monitored by a CCTV camera at the location of the patch panel and can be suspended by an NP. Moreover, using a patch panel will not incur in OpEx if a user is allowed to slot in its fiber. Otherwise, this scheme will also increase OpEx.

7.5 Cost evaluation

In this section, we evaluate CapEx and OpEx for open access in WDM- and TWDM-PON. For CapEx, we include only costs of the components and the extra fibers required in open access architectures. The cost of other physical infrastructure, with respect to digging, ducts, and housing, is quite significant, generally accounting for about 67% [6] of the overall total cost of ownership; however, it is almost similar [6] and as such negligible when comparing architectures. Regarding OpEx, we concentrate on energy consumption and component replacement, as well as costs for monitoring and fiber patching, which are specific to open access architectures. Other differences resulting from service provisioning are hard to quantify, and are not accounted. On the other hand, we do consider cost penalties due to insertion losses, which affect reach of the architectures, and consequently, node consolidation and the number of active sites. The general parameters of the evaluation and the basic assumptions of the component cost, power consumption, insertion loss, and mean time between failures (MTBF) are given in Table 7.B. For the OLT, we include shelf space, port card, transceiver, and layer 2 switching. For all cost calculations, we consider a planning horizon or time span (T_s) of 10 years, as this is a typical lifetime of active equipment technology [9]. These values have been discussed with the operators and the vendors in the European FP7 project OASE (optical access seamless evolution) [10]. A cost unit (CU) of 1 represents the cost of a GPON ONU. For the scheme with NP isolation, we assume the users to perform fiber patching.

7.5.1 Cost parameters

We evaluate the costs influenced by components and their replacement, power consumption, reach, monitoring and fiber patching. Apart from the component cost, we incorporate every design impact by translating it into its equivalent cost as follows:

The cost of power consumption of a component is evaluated as the product of power consumption of a component, cost of power, and T_S.

The cost of manual patching per user is evaluated as: $N_h \times T_P \times C_{MH} \times T_S$, where N_h is the percentage of user churn (migration towards a different NP) in a year, T_P is the time required for patching, and C_{MH} is the cost of one man-hour.

The cost of monitoring can be calculated using the sum of the component cost (test equipment / number of users per PON) and the personnel cost (number of full time equivalents (FTE) × salary × T_S / number of users per CO) spent on monitoring the spectrum compliance of NPs. Note that for calculating the personnel cost, we used the number of users per CO, as one person will not be dedicated for monitoring only a PON segment.

The replacement cost of a component can be computed as the product of failure probability (T_S / MTBF) and the component cost.

The reach of the technologies is decreased by the additional losses inserted by a PoU. The insertion loss of PoU and other components is given in Table 7.B. The reach penalty affects the degree of node consolidation, and consequently cost, which is evaluated as in [11].

Further, we measure the variance of these costs with the adoption level and the customer churn rate.

Impact of adoption level − Only the subscribed customers will generate revenues to pay back the investment in the network. Subsequently, only those customers should be accounted when calculating the "effective cost per user."

The cost of deploying and maintaining the equipment, in most cases, cannot be purely linearly scaled with the number of users. Equipment located in the CO can be installed gradually according to the evolution of subscribed households, whereas for equipment located in the field (e.g. at the RN), there are not many possibilities of gradual installation (e.g., the PS located in the last mile should be installed as soon as there is one customer). An architecture that requires installation of equipment with a higher sharing granularity will therefore result in a relatively higher cost per user when the uptake of customers is lower than the optimal 100%.

Impact of churn − A second economic influence that should be accounted is the impact of the churn rate, which is defined as the yearly percentage of users that switches to another NP. As this switching entails an extra cost, e.g. in the solution with MWR as PoU, the impact should be studied.

When a customer decides to change NP, he should be disconnected from the "old" NP and connected to the new one, which can be done manually in the case of an MWR, or automatically, through a simple reconfiguration of software for the other cases. It should be mentioned that the cost of churn is not limited to the manual or logical patching to disconnect and connect customers, but that it also entails some administrative costs (termination of contracts, final billing, setting up new contracts, etc.). Since these costs can be considered comparable in magnitude for all technology options under study, they were not taken into account in the current analysis. Currently, depending upon the region, the average churn rate in the telecommunication industry varies between 5% and

40% [12].

7.5.2 Results

Figure 7.5 shows the cost per user (expressed in CU) for the different architectures of wavelength open access in WDM-PON and TWDM-PON respectively, for an estimated uptake of 25%, 50%, 75%, and 100% of the total household potential available in the area after 10 years, and with a churn rate of 25%. Churn contributes to the cost in fiber re-patching for the solution with MWR as PoU. Other values of the churn rates at which the solution corresponds to the cost of the cheapest alternative solution are also indicated in the figure. This alternative solution can be different based on whether a scenario is fiber-rich or fiber-lean (e.g., in Figure 7.5: a, b and c, where the fiber-rich case is the cheapest alternative, but a fiber-rich ODN is not always available so a fiber-lean case is also considered) or can be the same in both scenarios (e.g., in Figure 7.5d, where the fiber-lean case is the cheapest alternative, so that a fiber-rich ODN is not required at all).

The open access options at the **RN interface** are analyzed in Figure 7.5a and b. The higher adoption levels reduce the cost of the solutions, with a larger impact for WDM-PON as compared to TWDM-PON.

In a fiber-lean scenario, the solution with DF as PoU is ruled out, and then the option with an ODF as PoU (Figure 7.2b) is the most economical choice for a churn rate lower than 42% in WDM- and TWDM-PON (Figure 7.5a and b). In this range of churn rate, the option with WAF is more costly due to the use of a WAF per customer (Figure 7.2c). As a customer churn rate higher than 42% is mostly not expected, the options of wavelength open access at the RN interface is limited.

In a fiber-rich deployment, the option with DF as PoU should be preferred for a churn rate high than 19% in WDM-PON and 37% in TWDM-PON. Hence, for this range of churn rate, extra fibers must be deployed from the start.

The open access options at the **OLT interface** are analyzed in Figure 7.5c and d. Similar to the case of the RN interface, the cost of the WDM-PON based architectures shows a higher susceptibility to adoption levels. For WDM-PON, the solution with MWR as PoU leads to the lowest cost, when the churn rate is lower than 33%. We attribute this to the simplicity of the solution with no additional requirement of monitoring equipment, tunable receivers at the ONUs and complex PoUs. Cost of fiber patching seems to be non-deterrent as the solution remains cost effective compared to other solutions even in a scenario when the churn rate is as high as 48% with an adoption level of 25%. Thus, from a cost perspective this is an ideal candidate. The solution with multiple FF achieves the lowest cost for very high churn rates, e.g., a churn rate higher than 33% for an adoption level of 100%; however, this solution can only be used in a

fiber-rich scenario. The higher cost in this solution is due to the use of tunable receivers at the ONUs and multiple feeder fibers at the OLT. Whether this solution will still be used in a fiber-rich scenario depends upon the tradeoff between the costs of the solution vs. the potentially long migration times in the solution with MWR as PoU. Other solutions lead to significantly higher cost. The solution with PS as PoU has a high cost due to the requirement of monitoring. The solution with BS as PoU decreases the fan out, consequently sharing granularity, and uses tunable receivers at the ONUs. The solution with WSS as PoU leads to the highest cost due to the use of a WSS for a limited number of users.

For TWDM-PON, the solution with BS as PoU is the most economical. The difference in the cost of the solution with normal TWDM-PON is within 1%. This is attributed to the fact that TWDM-PON has a large fan out, and thus the cost of having an additional PoU is insignificant. The solution with WSS as PoU has the second best cost performance for churn rates higher than 20%; it has an additional cost of between 3 and 10% compared to the solution with a BS as PoU. This can be regarded as a reasonable cost markup for added benefits offered by WSS as PoU, with respect to dynamic spectrum allocation among NPs. When compared with the solution with MWR as PoU, the solution achieves lower cost even when the churn rate is as low as 6% for adoption levels of 100%. Moreover, as its cost is inert to churn rates and as it can establish on-the-fly configurations, the solution with WSS as PoU will always be preferred. The solution with NP isolation can be used with an additional cost of between 13 to 28 % compared to normal TWDM-PON, given that the NP isolation is mandatory. This solution has a high cost due to its costly RN composed of multiple PSs and interleave filters.

Currently, we have used fixed splitting ratios per technology. The impact of the splitting ratio is very likely to be similar to the impact of adoption rates; as both factors affect the sharing granularity, and consequently, the cost per user. In general, the cost per user increases with reduced splitting ratios.

The results in Figure 7.5 outline an increase in the cost for the NP layer in architectures supporting open access. While this in general is a “disadvantage” associated with sharing network infrastructure, it does not weigh up to the savings that can be accrued because not all NPs are required to invest in the passive infrastructure anymore. What’s more, even at the NP layer, though the cost per user increases, still the CapEx baggage per NP remains low, thanks to open access.

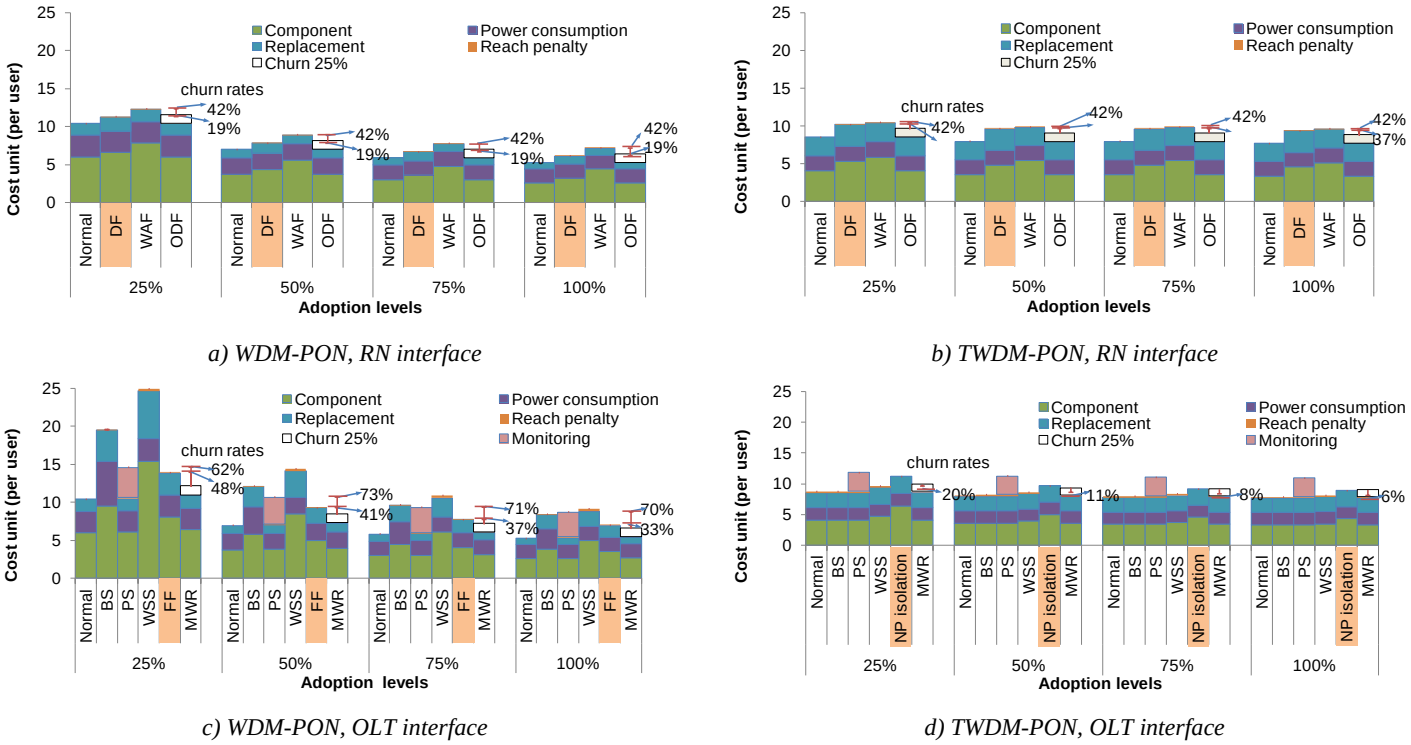

a) WDM-PON, RN interface

b) TWDM-PON, RN interface

c) WDM-PON, OLT interface

d) TWDM-PON, OLT interface

Figure 7.5: Cost evaluation of different architectures for wavelength open access in WDM-PON and TWDM-PON with varying adoption levels (varied from 25% to 100%) and churn rates (varied to correspond to the costs of the cheapest alternative options, further split between fiber-lean and fiber-rich scenarios). The solutions indicated in orange require the fiber-rich deployment

7.6 Conclusions

The combination of the ever-increasing demand for higher data rates with the trend towards open business models, asks that future-proof technologies be planned to cope with open access. This paper proposes architectures to enable open access in NG-PON2 networks - WDM-PON and TWDM-PON - using fiber and wavelength layers. We identified two interfaces at which the networks can be opened – RN and OLT. At the RN interface, the network can be opened using ODF, DF or WAF as PoU; at the OLT, the network can be opened using BS, MWR, WSS, PS, and FF as PoU. These solutions have their design tradeoffs. For example, the solutions using ODF and MWR require fiber patching and are sensitive to the churn rate. The solutions with WAF and WSS use elements that are more costly, the solution with PS violates security, and the solution with BS cannot allocate the spectrum dynamically among the NPs. On the other hand, the solutions with DF and FF require a fiber-rich scenario. Furthermore, in TWDM-PON, there are additional security challenges, as the broadcasting nature of a PS violates inter-NP isolation, thus requiring a novel adaption in the RN of TWDM-PON (Figure 7.4c).

Given the complexity of the design tradeoffs, there is no clear one-shoe-fits-all solution, and the selection requires an in-depth analysis of the impact of the design tradeoffs on the cost of the network. Following are the key findings of the cost analysis at these interfaces:

RN Interface – The option with ODF as PoU leads to the lowest cost for churn rates lower than 19% in WDM-PON and 37% in TWDM-PON. For higher churn rates, the solution with DF as PoU is preferred in a fiber-rich deployment.

OLT Interface – For WDM-PON, the solution with MWR as PoU leads to the lowest cost. Whereas for TWDM-PON, the solution with BS as PoU is the most cost effective.

Table 7.B: General parameters and assumptions of cost evaluation

General Parameters		Component's parameters					
		Part	Components	Cost	PC (W)	MTBF (years)	IL (dB)
Technology		ONU (WDM-PON)	1 Gb/s TRX (tunable TX and tunable RX, PIN)	2	4.5	19	–
Number of wavelengths (and users) in WDM-PON	32	ONU (WDM-PON)	1 Gb/s TRX (tunable TX and fixed RX, PIN)	1.5	4.2	25	–
Number of wavelengths in TWDM-PON	4	ONU (TWDM-PON)	10 Gb/s Burst-mode tunable TRX (APD, FEC)	3.1	5.5	13	–
Number of users in TWDM-PON	512	OLT (General)	Shelf space, 18 slots	100	90	150	–
Power budget in WDM-PON (dB)	28	OLT (General)	L2 switch (2T capacity), cost and power consumption per 1 Gb/s	0.1	1	25	–
Power budget in TWDM-PON (dB)	38	OLT (WDM-PON)	Port card +TRX (32 λ, occupies 2 slots in shelf space)	10	20	200	–
Area/Scenario		OLT (TWDM-PON)	Port card +TRX (1 λ, occupies 1 slots in shelf space)	3.6	6	45	–
Number of NPs	3	RN (WDM-PON)	AWG (M: N)	0.3×(M+N)	–	1000-80×$\log_2$(M+N)	4
Number of users per central office	20000	RN (TWDM-PON)/PoU	PS (1: N)	0.2×N	–	1500-150×$\log_2$N	3.2×$\log_2$N
Full time equivalents for monitoring	6	PoU	WSS (1: N)	40×N	1.375×N	38-3×$\log_2$N	4+$\log_2$N
T_s (Time span or planning horizon in years)	10	PoU	Band Splitter (1: N)	0.3×N	–	1500-150×$\log_2$N	1.5
Time spent per patch (hour)	0.46	PoU	Interleave filter (1:N, 50 GHz)	0.3×N	–	1500-150×$\log_2$N	2
Length of DF (km)	2	PoU	Patch Panel (at home premises)	0.5	–	500	0.5

Cost assumptions		PoU	Patch Panel (at CAN)	3	–	100	0.5
Cost of 1kWh usage of electricity (CU)	0.004	PoU	Test equipment (for monitoring)	3.1	5.5	13	–
Cost of man-hour for fiber patching (CU)	1	PoU	WAF	1.8	-	1350	1.5
Salary of technicians for monitoring (per year in CU)	1000	Fiber	Fiber per km	0.3	–	40	0.34

Abbreviations used in the table: FEC: forward error correction; TEC: thermal electric control; APD: Avalanche Photodiode; TRX: transceiver; T: terabit, PC: Power Consumption. The numbers used in the table are from [7] and [10].

References

[1] V. Sivaraman, C. Russell, I. B. Collings, and A. Radford, “Architecting a national optical fiber open-access network: the Australian challenge," *IEEE Network*, vol. 26, no. 4, pp. 4-10, 2012.

[2] P. Sköldström, A. Gavler, and V. Nordell, “Virtualizing Open Access Networks,” in *SNCNW*, 2011.

[3] Y. Luo, X. Zhou, F. Effenberger, X. Yan, G. Peng, Y. Qian, and Y. Ma, “Time and wavelength division multiplexed passive optical network (TWDM-PON) for next generation PON stage 2 (NG-PON2),” *IEEE Journal of Lightwave Technology*, vol. 31, no. 4, pp. 587 – 593, 2013.

[4] K. Grobe, M. Roppelt, A. Autenrieth, J. P. Elbers, and M. Eiselt, “Cost and Energy Consumption Analysis of Advanced WDM-PONs,” *IEEE Communications Magazine*, vol. 49, no. 2, pp. s25 - s32, 2011.

[5] M. Van der Wee, C. Mattsson, A. Raju, O. Braet, A. Nucciarelli, B. Sadowski, S. Verbrugge, and M. Pickavet, “Making a success of FTTH learning from case studies in Europe,” *Journal of the Institute of Telecommunications Professionals*, vol. 5, no. 4, pp. 22-31, 2011.

[6] K. Casier, S. Verbrugge, R. Meersman, D. Colle, M. Pickavet, and P. Demeester, “A clear and balanced view on FTTH deployment costs,” *Journal of the Institute of Telecommunications Professionals*, vol. 2, no. 3, pp.27-30, 2008.

[7] OASE Project, D6.3: Value network evaluation, Jan. 3013, available at: http://www.ict-oase.eu/index.php?page=120&

[8] J. S. Wey, H. Rohde, and C. Badstieber, “Open lambda initiative for ultra high capacity optical access networks,” *Access Networks and In-house Communications*, 2010.

[9] M. Van der Wee, K. Casier, K. Wang, S. Verbrugge, and M. Pickavet, “Techno-economic evaluation of FTTH migration for a network provider: comparison of NG-AON and TWDM-PON,” in *Asia Communications and Photonics Conference and Exhibition (ACP)*, 2013.

[10] OASE Project, D4.2.1: Technical assessment and comparison of next-generation optical access system concepts, Oct. 2011, available at: http://www.ict-oase.eu/index.php?page=120&

[11] C. Lange, R. Hülsermann, D. Kosiankowski, F. Geilhardt, and A. Gladisch, "Effects of network node consolidation in optical access and aggregation networks on costs and power consumption," in *OPTO*, 2010.

[12] T. Bobbier, “Keeping the Customer Satisfied: The Dynamics of Customer Defection, and the Changing Role of the Loss Adjuster,” *CILA Report*, http://www.cila.co.uk/publication/articles/keeping-customer-satisfied-tony-boobier, accessed July 2013.

8

Flexible TDMA/WDMA Passive Optical Network: Energy Efficient Next-Generation Optical Access Solution

Somewhere, something incredible is waiting to be known.

−Carl Sagan

In this chapter, we propose an advanced flavor of TWDM-PON, which has a long reach, a high fan-out and energy-efficiency.

Abhishek Dixit, Bart Lannoo, Goutam Das, Didier Colle, Mario Pickavet and Piet Demeester.

Published in Journal of Optical Switching and Networking, Elsevier, 2014.

Abstract: Access networks must further advance to address the intensification of the requirements of growing speeds and the usage of Internet applications, and time and wavelength division multiple access (TDMA/WDMA) based passive optical networks (TWDM-PONs) have been widely considered as one of the evolutionary steps of next-generation optical access (NGOA) networks. TWDM-PON combines the flexibility of TDMA with an increased capacity offered by the use of a WDM layer. Moreover, it offers interesting and challenging avenues to minimize energy consumption: especially, with current access networks consuming about 80% of the energy consumed in the Internet. Along with other efforts, reducing energy consumption of central offices is conspicuous as it directly minimizes the operational expenditures of network providers. In this paper, we explore the new paradigms to conserve energy at the central offices in TWDM-PONs. By extensive simulations, we evaluate the possible energy savings in the various flavors of TWDM-PON. Based on the findings, we propose a new architectural flavor of TWDM-PON and benchmark the architecture for cost, power consumption and reach. We also propose a novel energy saving scheme for the proposed architecture and evaluate the impact of the proposed algorithm on energy savings by extensive simulations.

8.1 Introduction

Access Evolution from xDSL to FTTX – xDSL and cable modem technology made improvements in bandwidth capacity but have physical limitations to open the capacity bottleneck that exists in subscriber access networks, which cover the "first mile" areas and serve numerous residential and small business users. Thus, xDSL and cable modem technology are being replaced by optical network technologies, like fiber-to-the-X (or FTTX, where X can mean the home, curb, cabinet, or building). FTTX technologies have been envisioned as a preferred solution because of their potential to provide high data rates and low energy per bit to subscribers, and passive optical networks (PONs) have been widely considered as a promising technology for implementing various FTTX solutions. Currently, a variety of PON systems have been proposed, with the most used one being the time-division multiplexing (TDM) based PON. Meanwhile, two variants of TDM-PON, gigabit-capable PON (GPON) [1] and Ethernet PON (EPON) [2], have been used for mass rollouts. GPON is widely deployed in parts of the US and Europe whereas EPON is deployed in Japan and Korea. Further global PON deployment is expected at a compound annual growth rate of 28.67% [3].

Requirements of a next generation optical access solution –With the ever-increasing requirements of bandwidth, a next generation optical access (NGOA) network with a higher bandwidth per customer is a natural path forward [4]. The NGOA solution should also allow seamless migration of customers and should

coexist with legacy GPON and EPON architectures to protect the investment of network operators. In addition, network operators require many additional attributes to optimize their investments in the NGOA solution. With this in mind, currently the requirements of an optimal NGOA solution are being actively investigated, e.g., done in the European FP7 project OASE (optical access seamless evolution). In OASE, the following key requirements are defined for an NGOA by 2020 [5]:

- Support of 128 Gbit/s up to 500 Gbit/s aggregated capacity per feeder fiber.
- Support of 256 up to 1024 optical network units (ONUs), i.e. customers, per feeder fiber.
- Support of 20 to 40 km extended passive reach option for the working path.
- Low energy consumption.
- Low capital and operational expenditures.
- Coexistence with GPON.

In general, the requirements aim to facilitate high bandwidth per customer, a high customer fan out, long reach, energy efficiency, while maintaining low cost and coexistence with GPON. It is easy to comprehend the main motivation behind the design requirements of an NGOA solution. Clearly, the requirements of bandwidth will further increase the coming years, and new applications will pop up to consume available network bandwidth. A high customer fan out allows more efficient sharing of fiber, components and rack space of an optical line terminal (OLT) at a central office (CO), and thus minimizes the cost and the power consumption of the network per user. Long reach is considered for a higher node consolidation, where a central access node (CAN) replaces many active COs. The reduction in active network sites minimizes operational expenditures (OpEx) of an operator. The requirement of low energy consumption is to minimize operational expenditures and greenhouse gas emissions. Low capital and operational expenditures are the main motivations behind the other requirements and hence remain as one of the key requirements of network operators. Coexistence with GPON (for Europe, GPON is the main legacy deployment) safeguards network providers' investments in legacy GPON deployment.

How legacy networks address these needs? –Currently deployed EPON or GPON systems are unable to provide the expected residential data rates by the year 2020. Typically, these PON systems are using a separate wavelength (of 1 or 2.5 Gb/s) for downstream (OLT to ONU) and upstream (ONU to OLT), and both wavelengths are then shared among multiple users (e.g., 16, 32, 64). As users share the same pool of capacity, competition arises and traffic requests

cannot be honored because of congestion. The mentioned capacity bottleneck for TDM-PONs was tackled by the standardization activities for the 10G xPON systems (10G EPON and 10G GPON, respectively). The physical access bit rate is pushed to 10 Gb/s per wavelength, firstly for the downlink part and secondly in a symmetric offer for the uplink part. Nevertheless, 10G xPON systems fail to meet all the requirements of an NGOA solution: especially, a high upstream and a downstream capacity.

NGOA solutions – To fulfill the requirements of an NGOA solution, several architectural flavors have been investigated. Wavelength division multiplexing PON (WDM-PON) provides a dedicated wavelength per customer and offers the most straightforward way of capacity increase. WDM-PON, however, uses the available spectrum inefficiently as there is no sharing of wavelengths. This inefficiency is removed by time and wavelength division multiplexed PON (TWDM-PON) by utilizing a TDM layer in combination with the WDM technology. TWDM-PON has an increased capacity thanks to the WDM technology, and efficiently shares it among many users using the TDM layer. Thus, it is considered as an important NGOA candidate. TWDM-PON is selected as a primary candidate of the NGOA solution [6] by the full service access network (FSAN). Notably, FSAN initiated an effort to investigate NGOA solutions in 2011.

With the selection of TWDM-PON as a NG-PON solution, a large-scale development of TWDM-PON based system concepts is imperative. Thus, TWDM-PON will serve as a preeminent framework for the evolution of future access networks. There are many ways to design TWDM-PON architecture. The architectural solution can share the resources (i.e. wavelength) in a static manner or can provision a more dynamic sharing of the network resources. The dynamicity of resource sharing is referred as flexibility [7], [8]; in general, there can be two extremes of flexibility: fully flexible and static. For example, in TWDM-PON, the network resource is a set of wavelengths, and if all users can share all wavelengths at all time instances, then the architecture is fully flexible, whereas if all users have access to just one wavelength, then the architecture is inflexible or static. The most common example of a fully flexible architecture is TDM-PON; the network resource is one wavelength and all users dynamically share this wavelength.

Flexibility brings with it several advantages. Most importantly, it facilitates bandwidth allocation mapped to the demand and the behavior of users. As a result, it copes with the burstiness of network traffic and minimizes the use of wavelengths. This enables use of wavelengths at high utilization and switching off unused wavelengths, leading to energy efficiency. While there are advantages of flexibility, there are also constraints like security, power budget, etc. Thus, there is a need to quantify the advantages and the disadvantages of flexibility to

design an optimal architecture.

This paper first evaluates the optimal degree of flexibility and based on that proposes an optimal architectural solution. For the proposed architecture, we introduce a novel energy saving mechanism, which reduces significantly the power consumption of OLTs.

The remainder of the paper is organized as follows. In section 8.2, we discuss the architectural solutions and system concepts of TWDM-PON that can extract the flexibility advantages. In section 8.3, we quantify flexibility and identify the optimal degree of flexibility. In section 8.4, we propose a flexible TWDM-PON architecture based on the findings in section 8.3, and benchmark its cost, power consumption and reach with the other variants of TWDM-PON. In section 8.5, we propose a novel energy saving mechanism for the considered architecture and evaluate its gains through exhaustive simulations.

8.2 TWDM-PON and approaches to design flexible architectures

In this section, we first discuss basic TWDM-PON architectures and then discuss the approaches to design flexible architectures

8.2.1 TWDM-PON architectures

One of the drivers of the evolution of optical access networks is a higher node consolidation. In a node consolidation scenario, a single CAN replaces multiple active network sites (i.e., local exchange), reducing the operational cost of the network. This drives the OLT to move toward the core, increasing the distances between the OLT and ONUs, as shown in Figure 8.1. This also allows an NGOA solution to have two or more splitting stages. Thus, in the NGOA scenario, the OLT is located at the CAN and is connected to remote node 1 (RN1) at the local exchange (LE) by the feeder fiber (FF). Through the distribution fiber (DF), each output port of RN1 goes to a different remote node 2 (RN2), and then each output port of RN2 is connected to a different ONU by the last mile fiber (LMF). Moreover, the architectures have a tree topology, with the OLT as the root of the tree and the ONUs at the leaves. There are also some proposals for ring-based architectures. Ring-based architectures can employ a fast protection switching mechanism from synchronous optical network/synchronous digital hierarchy (SONET/SDH) technology, but they require the use of add–drop nodes, which increase the insertion loss, costs, and power consumption. Moreover, a large part of the duct network in developed countries was laid before the appearance of the SONET/SDH ring network topology, and thus ring solutions do not provide short-distance paths between nodes [9].

Figure 8.2 shows the general architecture of TWDM-PON. The key features of

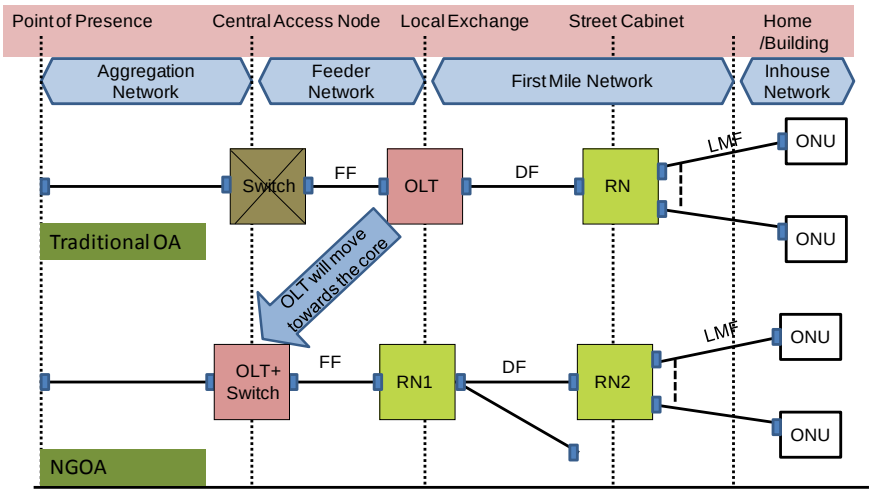

FF = Feeder fiber, DF = Distribution fiber, LMF = Last mile fiber

Figure 8.1: Difference between traditional optical access (OA) and next-generation optical access (NGOA) scenarios

the TWDM-PON architecture are:

- To provide higher peak data rates per user, downstream and upstream channel capacity of 10 Gb/s and 2.5 Gb/s are considered.
- To support a high fan out (640 or 1280), with a sustained data rate higher than 500 Mb/s, 40 or 80 channels per OLT are considered.
- Migration from deployed optical access networks is one of the key requirements. As RN2 is a power splitter, TWDM-PON uses the already deployed passive optical distribution network (ODN) infrastructure in the field.

Together, with the above-mentioned features, other design criteria, e.g., longer reach, low cost, and low power consumption are desired. We now discuss in detail the system design of various units of TWDM-PON:

OLT: Figure 8.2 shows the detailed system design of the OLT. We use photonic integrated circuit (PIC) based fixed transceivers array (TRXA). The TRXA is designed using PIC to minimize the OLT form factor. Note that we have shown four TRXAs where each TRXA has ten dense WDM (DWDM) channels offering an upstream and a downstream rate of 2.5 Gb/s and 10 Gb/s per channel, respectively. Each TRXA is composed of ten fixed wavelength lasers. The C band is used for the upstream and the L band for the downstream channels, and a series of L and C band diplexers are used to multiplex and demultiplex downstream and upstream channels respectively. We combine four TRXAs corresponding to 40 upstream and downstream channels (Figure 8.2).

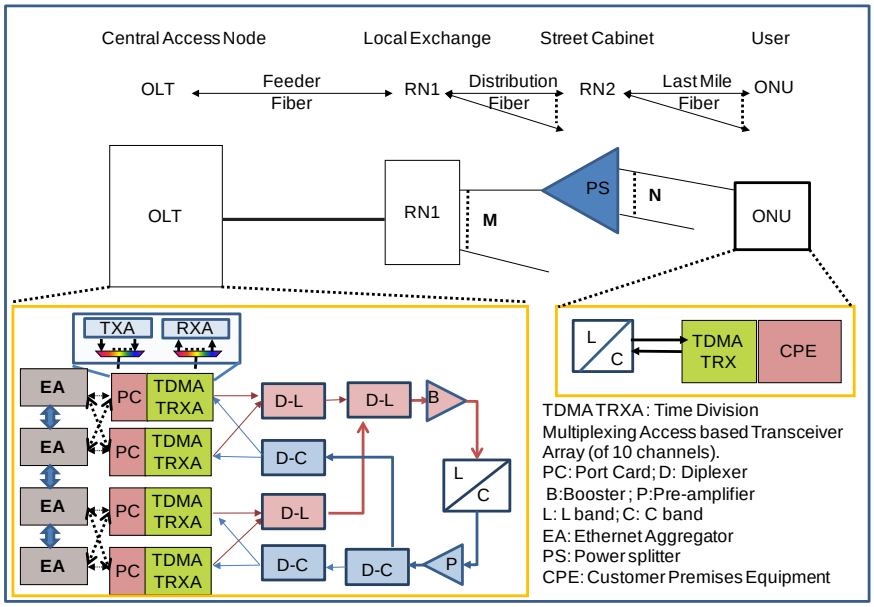

Figure 8.2: General TWDM-PON architecture consisting of two remote nodes

We refer to such a combination of TRXAs as a TRXA bank (TRXAB). The TRXAB seems complex, but serves more customers (640/1280) than the conventional access networks, in which a GPON or an EPON OLT serves only 32 or 64 customers, and thus the cost and the power consumption of TRXAB is not high. Lastly, the erbium doped fiber amplifiers (EDFAs) based pre-amplifier and booster are used to increase the reach.

RN1: The design of RN1 can vary and governs the flexibility of the architecture. There can be various choices for RN1, e.g., a power splitter, an arrayed waveguide grating (AWG), or an active switch, e.g., wavelength selective switch (WSS). The choice of RN1 is further discussed in section 8.3 and in section 8.4.

RN2: We use a simple power splitter at RN2, easing the migration of TWDM-PON from the deployed GPON (or EPON) architectures.

ONU: Since the cost and the power consumption of the ONUs are not shared, the ONU design should be simple. The transceiver (TRX) design significantly influences cost. To minimize cost and inventory issues, colorless TRX design for ONUs is paramount. Various solutions have been proposed for colorless TRXs, for example, spectrum-sliced light emitting diodes (SSLEDs) [10], amplified spontaneous emission (ASE) spectrum-sliced seeded reflective semiconductor optical amplifiers (RSOAs) [11], ASE spectrum-sliced injection-locked Fabry–Perot laser diodes (FP-LDs) [12], [13], wavelength reuse with injection-locked

FP-LDs [14], modulators with centralized optical carrier generation [15]–[18] and tunable optics [19]. Among the approaches previously listed, the SSLEDs and the RSOAs cannot be modulated at sufficiently high speeds to support the data rates required by the proposed architecture (up to 10 Gb/s), whereas, on the other hand, the directly modulated injection-locked FP-LDs schemes have chirp characteristics that are not suitable for the transmission reach required. The centralized optical carrier generation system requires new fiber connections between the central system and the ONUs, and is thus not able to reduce costs to the point where mass deployment is possible. We propose to use a tunable laser and a tunable filter at the ONUs. Currently, the transceivers are tunable over four nanometers or so, but we expect cheap transceivers that will be tunable over the entire C/L band to be available in the next few years. For a further detailed design of the OLT, RN1, RN2 and ONU, we refer the interested readers to [19].

8.2.2 Design of flexible architectures

By flexible architectures, we mean that the network resources at the OLT should be used efficiently. The network resource that is of importance is the TRXA at the OLT. The TRXAs are used in conjunction with the Ethernet aggregators (EAs), and thus the minimal use of TRXAs minimizes the use of EAs. EAs consume the major portion of energy consumed at the OLT [20]. They account typically for about 14 % of the energy consumed in the Internet, i.e., about 70 % of the energy consumed in the OLT. For resiliency, they are used for normal and backup aggregations.

There are two methods to use effectively the TRXA at the OLT:

Flexible CO design: Provisioning dynamic connection between the OLTs and the PON segments in a CO.

Flexible remote node design: Exploiting the remote node design to optimally share the TRXAs among the users in a PON.

8.2.2.a Flexible CO design

Currently, a CO serves a large number of customers, and thus has many OLTs. For example, a CO serves about 16,000 customers in a dense urban scenario. Considering a split of 1:32 as in a conventional GPON, the number of OLTs required per CO will be 500. As, however, we consider an OLT serving 640/1280 customers in TWDM-PON, the number of OLTs (~16) per CO will be fewer.

Not all OLTs, however, are always required because of a low data rate or filling ratio. Because of these unused OLTs, there is excessive power consumption at the CO. This excessive power consumption can be reduced by activating the OLTs according to the network load. When the combined network load of the PON segments is light, instead of using an OLT for a PON segment,

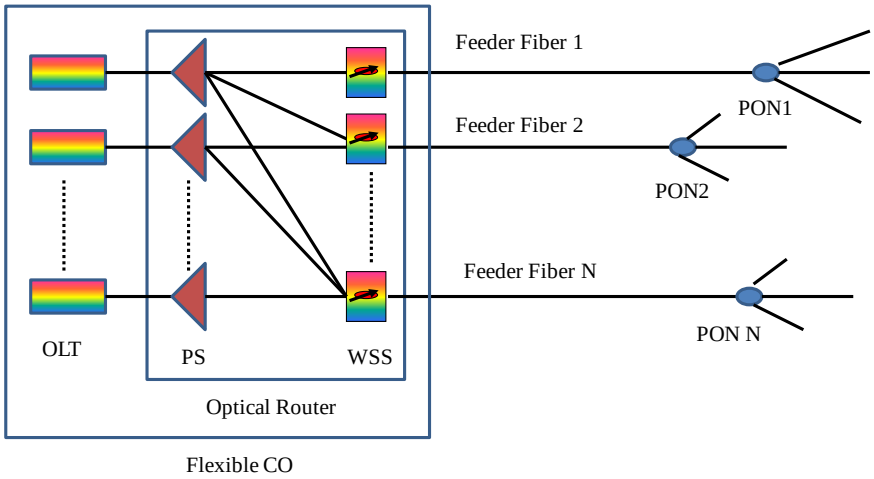

Figure 8.3: Flexible CO design to share OLTs with PON segments dynamically

we share the OLTs. This allows us to shut down the unused OLTs leading to energy efficiency. We now explain this with an example. Let us assume four PON segments per CO. At a light load, e.g. 25 %, we are able to serve all four PON segments with just one OLT. This saves about 75% of the energy consumption. This is the basic idea of a flexible CO design, where we connect OLTs with different PON segments using a flexible optical router (OR), as shown in Figure 8.3.

The OR combines the OLTs in such a way that they can be used according to the combined network load. The OR broadcasts and selects the wavelengths, and is made up of power splitters and WSSs. The OR has an insertion loss of about 10 dB, which can be compensated using a pre-amplifier (in the upstream direction) and a booster (in the downstream direction) at the OLT. The booster gain at the OLT is limited to keep the total power in the fiber within the laser Class 1M safety limits. If, however, there is a higher insertion loss within the OLT, the booster gain can be increased to compensate for the additional losses. Thus, insertion losses within the OLT do not affect the reach of the solution. In addition, the power consumption due to the use of WSSs is negligible in comparison to the power savings that can be achieved by shutting down the OLTs.

8.2.2.b Flexible remote node design

For a higher flexibility, a flexible CO can be complemented with flexible remote node (RN1) designs. The straightforward option is to use a power splitter at RN1. The architectures with a power splitter are fully flexible, but have a higher insertion loss, which restricts the reach of the architectures. To maximize

the reach of the PON solutions, an AWG is used. An AWG typically has an insertion loss of 4 dB independent of its fan out. An AWG, however, routes a specific wavelength to a specific output port, and thus the architectures with AWGs are static. To improve the flexibility of the solution with a lower insertion loss, there have been proposals [21], [22] to use WSSs at RN1. The use of WSSs is interesting as it imparts flexibility in resource allocation and has a smaller insertion loss (for 1:8 WSS, the insertion loss is 6 dB) than a power splitter. Based on the RN1 design, the degree of flexibility can thus vary from fully static to fully flexible. We now discuss these various flavors of flexibility:

In a *fully flexible* architecture, each wavelength is simultaneously routed to all TDM-PONs (or RN2), and by consequence each TDM-PON can be reached by any wavelength. Typical examples of these architectures employ power splitters, and are referred to as the wavelength selected TWDM-PON. Figure 8.4a provides an example of RN1 of a fully flexible architecture. RN1 is a power splitter, and all wavelengths are broadcasted to all TDM-PONs (or RN2s), and by consequence to all ONUs. In this way, each ONU is time shared with the other ONUs with the advantage of having access to a WDM dimension. In the downstream direction, all wavelength channels are broadcasted from the local exchange to all users, without any selectivity in the network itself. The selection is done by the ONU at the user side. This architecture is simple (using a legacy power-split ODN) and provides full flexibility. It, however, suffers from high insertion losses and has a serious security threat as the content of all wavelengths is available to all ONUs. Note that a coherent detection technique at the receiver can deal with high insertion losses as it allows increasing the optical link budget up to 50 dB (compared to ca. 30 dB for direct detection techniques in current PON architectures). Coherent detection, however, is still a complicated and expensive technique to be implemented in practical scenarios for an access network.

In a *fully static* architecture, each wavelength is routed to only one fixed TDM-PON (or RN2), and each TDM-PON can be reached by only one fixed wavelength. Typical examples of these architectures employ AWGs and are referred to as the wavelength split TWDM-PON. Figure 8.4b shows the architecture of a static TWDM-PON. This architecture is also extensively discussed in literature [21] - [23]. A cyclic AWG can be assumed to access upstream (e.g., C-band, 1530 - 1565 nm) and downstream (e.g., L-band, 1565 - 1625 nm) bands [24]. As an AWG has a smaller insertion loss than a power splitter, this architecture has a better power budget and can support more users and a longer reach. Moreover, it also has a high security. Flexibility, however, is restricted as each wavelength is connected to a fixed TDM-PON, and this cannot be rearranged with e.g., a changing traffic demand.

In a *partially flexible* architecture, each TDM-PON can be reached by multiple

wavelengths. Each wavelength can reach either multiple or only one TDM-PON. These architectures are more costly than the fully flexible or the fully static counterparts, but have a higher security and lower insertion loss than the fully flexible architectures, and, of course, are more flexible than a fully static architecture. Often, a trade-off among these different parameters will decide the best architecture in a specific situation. Figure 8.4c shows an example of a partially flexible architecture in which a partially flexible optical router (PFOR) is used at RN1. There has been an extensive study about the design of PFOR. The passive components based reconfigurable remote node designs are proposed in [25]. The authors of [25] propose passive reconfigurable optical access network (PROAN) in which ONUs are relocated in a subset of two wavelength pairs (each pair contains a downstream and an upstream wavelength). These subsets overlap cyclically in order to enable flexible bandwidth rearrangement. The passive components based re-configurability, however, imposes a higher insertion loss penalty. The active components based re-configurable solutions are proposed in [26] and [27]. The solution proposed in [26] uses an array of SOAs to provide a fully flexible solution. Because of the use of an array of SOAs, however, the solution will have a tremendous impact on the cost and the energy consumption. The authors in [27] propose a re-configurable remote node configuration based on re-configurable optical add drop multiplexers (OADMs) equipped with micro-resonators. Further, the authors in [28] propose a quasi-passive reconfigurable remote node solution to provide flexibility. The quasi-passive reconfigurable solution consumes power only during reconfiguration and requires no steady-state power. The solutions proposed in [27] and [28], however, require a complex remote node element, which is not available off-the-shelf at a low cost. Moreover, many advantages of flexibility can be obtained by using WSSs. WSSs are widely used in core networks, ensuring their large-scale production, which optimizes their cost. Furthermore, because of a large-scale research focusing on their design and development, WSSs are expected to be available with a lower cost, a higher fan-out and a lower insertion loss. In addition, currently there are solutions of WSSs that are available with selective multi-casting, which offers interesting vistas to offer flexibility.

There are concerns regarding the use of active components. Nevertheless, the arguments against the use of active elements in a field can be invalidated because of the following reasons. Firstly, as the TWDM-PON has a high fan out, the power consumption and the cost of using an active element per customer is low. Secondly, in NGOA PON, the RN1 is at the present location of a CO where electric power is already available and thus power feeding does not cause additional expenses. Lastly, no PON technology can simultaneously meet the high fan out and reach requirement of NGOA architectures [5], and all solutions thus require at least active reach extenders.

Further, note that, even though a partially flexible solution employs active

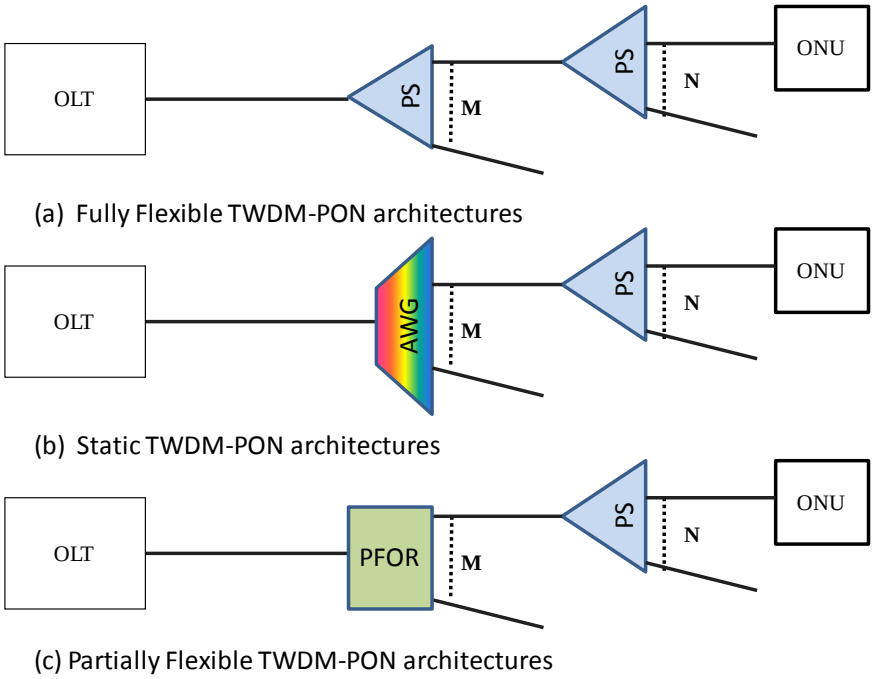

Figure 8.4: Different variants of TWDM-PON based on the degree of flexibility, where remote node 2 is always a power splitter (PS)

components, they have been still referred as PON as the technology is a PON derivative and the data remains optically transparent.

8.3 Evaluation of flexibility

In this section, we evaluate the flexibility of various flavors of TWDM-PONs. Papers [7] and [8] have done some preliminary evaluation of flexibility in TWDM-PONs. In this section, we first discuss the figure of flexibility (Subsection 8.3.1), and then outline various advantages (Subsection 8.3.2) and constraints (Subsection 8.3.3) of flexibility. Following this, we discuss in detail the evaluation approach to investigate flexibility (Subsection 8.3.4). Finally, simulation results (Subsection 8.3.5) and conclusions (Subsection 8.3.6) are discussed.

8.3.1 Figure of flexibility

There can be many interpretations and meanings of flexibility. As pointed out before, flexibility is the architectural capability where all users dynamically share the network resources (i.e. wavelength). Flexibility is of two types:

8.3.1.a Multicasting flexibility

In architectures having multicasting flexibility, a wavelength is shared among many users. Because of this, when the load of the users sharing the same wavelength is light, a new wavelength is not allocated to them. This reduces the channel underutilization, and consecutively the wavelength use, as now one user is necessarily not allocated one wavelength.

Multicasting flexibility stems from using power splitters at remote nodes. Because of a power splitter at RN2, there is always some degree of multicasting flexibility present in a TWDM-PON.

8.3.1.b Switching flexibility

In architectures with switching flexibility, the wavelengths are dynamically re-routed according to the instantaneous traffic demand. By dynamic configuration of wavelengths, the users with a heavy load are allocated more wavelengths, improving the performance. This leads to a smaller probability of the network being overloaded. To measure this probability of overloading, we introduce the network overloading factor (NOF), which is defined as the probability of the network load exceeding the network capacity. A higher NOF leads to higher delays in the network. The architectures with active components, e.g., WSS in RN1, offer switching flexibility.

8.3.2 Advantages of flexibility

In a TWDM-PON, multiple TDM-PONs can be set up from the OLT, each at a specific wavelength. Each TDM-PON serves a set of users, and within this set, the capacity is shared. By means of wavelength selection or routing, the number of users within the set can be varied, and thus the capacity offered per user can be varied. Hence, a flexible TWDM-PON can offer capacity-on-demand, and the congestion probability can be significantly reduced compared to a static wavelength configuration. Other advantages of a flexible architecture are network extensibility, energy efficiency, and network migration [22], [29].

8.3.3 Constraints raised by enhanced flexibility

Flexibility is added in the network by the use of either active switches or power splitters. While adding active switches increases cost, the use of power splitters increases insertion loss. In addition, power splitters broadcast signals to all users, raising potential security concerns. Thus, adding extra flexibility in the access network comes at the cost of drawbacks like higher equipment costs or higher insertion losses and security issues.

8.3.4 Evaluation approach of flexibility in TWDM-PONs

As discussed, TWDM-PONs can have a different degree of flexibility. A question that arises is if a fully flexible architecture is really needed, or if a partially flexible architecture can already serve similar flexibility advantages. In this subsection, we discuss parameters (Subsection 8.3.4.a), architecture (Subsection 8.3.4.b), traffic models (Subsection 8.3.4.c), and medium access control (MAC) protocols and related assumptions (Subsection 8.3.4.d) used for evaluating flexibility.

8.3.4.a Parameters for evaluating flexibility:

To quantify flexibility, we study two parameters: number of wavelengths used, and the quality of service (QoS) metrics like delay and NOF.

Number of wavelengths used: With access networks consuming about 80% of the energy consumed in the Internet, energy efficiency is a paramount consideration. For optical access networks, the bulk of the energy is consumed at the ONUs, necessitating research initiatives as in [30], [31]. At the same time, saving energy at the OLT is a key requirement for network operators as it directly influences their operational expenditures. An important assessment parameter to quantify energy efficiency is the number of wavelengths required at a certain network load. The minimal use of wavelengths, and consecutively other supporting functionalities like port cards, leads to lower energy consumption and operational expenditures. The number of wavelengths (or transceiver) required is a function of statistical multiplexing of the network: when more users are grouped together on a wavelength, fewer wavelengths are required. To quantify the gains of statistical multiplexing, we will study the average number of wavelengths required vs. the degree of multicasting.

QoS performance: Another parameter that we investigate is the influence of flexibility on the quality of service (QoS) performance. The QoS performance is important to deliver high priority traffic over the network. Average packet delay is one of the important QoS parameters [32]. The delay increases whenever the network is overloaded. Thus, we study both NOF and queuing delay. For our study, we consider only queuing delay at the ONUs and not the propagation delay between the OLT and an ONU.

8.3.4.b Architecture considered for evaluation:

We simulate a TWDM-PON with M = 16 TDM-PONs, each consisting of N = 4 ONUs, and with 16 wavelengths, each with a capacity of 1 Gb/s (cf. Figure 8.2). Note that for the simulations, we do not consider 40 or 80 channels at the OLT as we believe that the gains of multicasting or switching flexibility can be quantified accurately even with a scaled down number of users and wavelengths. We consider five different variations of a partially flexible TWDM-PON, each

with a varying degree of flexibility in RN1 by varying the values of m_s and m_{AWG} (or m_{WSS}), while keeping $M = m_s \times m_{AWG}$ (or m_{WSS}) constant (cf. Figure 8.5). Note that m_{AWG} and m_{WSS} represent the output port number of the AWG and WSS, respectively. For our simulations, we assume the values of m_{AWG} or m_{WSS} as {1, 2, 4, 8, 16}. Not all these configurations of the port numbers of WSS and AWG are available; we, however, choose these values to study flexibility in the most logical incremental steps. For the different variants, Group x indicates the number of TDM-PONs ($x = m_s$) that can share the same wavelength, or the number of wavelengths that can be used by one TDM-PON (or RN2). In two extreme cases, this architecture is reduced to a fully flexible architecture ($m_s = 16$ or Group 16) and a fully static wavelength-split architecture ($m_s = 1$ or Group 1), respectively. The other architectures then represent the partially flexible architectures and specify that only 8, 4 or 2 specific wavelengths (Group 8, 4, 2) can be used by one TDM-PON.

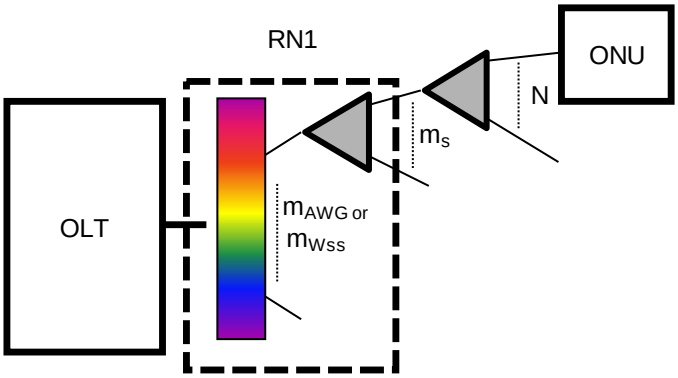

Figure 8.5: TWDM-PON flavor based on AWG and power splitters considered for evaluation

8.3.4.c Traffic model:

We study the performance of various variants of flexible TWDM-PON architectures by using the OPNET simulation tool. In our model, we consider R_D to be the data rate of the access link from a user to an ONU, and R_U to be the data rate of an upstream channel from an ONU to the OLT. The maximum distance between the OLT and ONUs is 100 km. We choose $R_U = 1$ Gb/s and $R_D = R_U/N = 250$ Mb/s. We generate packets in the form of Ethernet frames (64 to1518 bytes) and packets arrive at each ONU from the end user. The simulated user traffic is self-similar by aggregating S = 32 sub-streams [33], each consisting of alternating Pareto-distributed on/off periods, with a shape parameter of 1.4 for the on period and a shape parameter of 1.2 for the off period. During the on period, the packet arrivals are exponentially distributed

with a mean arrival rate of A_r (in b/s). The variable traffic load can be produced by varying A_r and the location parameter for the on and off period. The load is normalized with the maximum upstream capacity (16×1Gb/s).

The reach of the PON also influences its traffic characteristics. A PON with long reach aggregates many users with different traffic profiles (such as business and home users) and over different geographical areas (such as rural and urban). The aggregation of users with different traffic profiles makes the traffic asymmetric. For example, the peak traffic hours of business users are at morning (near 10 am) and home users are at night (near 9 pm), leading to an asymmetric traffic. As the aggregation of self-similar traffic and asymmetricity increases burstiness [34], a long reach PON has more bursty traffic. On the other hand, a short reach PON has more symmetric and less bursty traffic. To understand the effect of the traffic on the flexibility evaluation, we produce highly bursty and less bursty traffic. To compare only the effect of burstiness of traffic, we, however, use the same reach (100 km) and the number of users (64) for both less bursty and highly bursty traffic.

Different levels of burstiness can be achieved by varying A_r. To produce highly bursty traffic, we use an A_r value of 12.5 Mb/s for all loads. To produce less bursty traffic, we vary A_r as 0.009 Φ, where Φ (Mb/s) is the TDM-PON load. Note that for less bursty traffic, on average, an ONU is switched on for a longer time.

8.3.4.d MAC protocol and related assumptions:

For evaluating different architectural options of a TWDM-PON, a suitable medium access control (MAC) protocol is needed to manage the time and the wavelength allocation. There exist two approaches of upstream scheduling and wavelength assignment (USWA): online and offline. In the online approach, upon the arrival and processing of a report from an ONU, the OLT immediately decides on the USWA for the corresponding grant. In the offline approach, the OLT waits until it has received all the reports from the ONUs (or part of them) and then it performs some algorithm to find the best USWA scheme for the corresponding grants. The offline approach has a low complexity and can address fairness and QoS issues among different ONUs. Thus, for this paper, we have used an offline scheme based MAC protocol, comparable to the protocol proposed in [35], to investigate the optimal degree of flexibility in TWDM-PON architectures.

At the start of a new frame, we compute the number of wavelengths according to the offered load of the ONUs. More concretely, the number of wavelengths for the AWG (N_A) and the WSS (N_W) based RN1 is computed as:

$$N_A = \sum_{i=1}^{M/G_N} \left\lfloor Max(\Lambda_G / C, \frac{N_M G_N}{M}) \right\rfloor$$

$$N_W = \left\lfloor Max(\sum_{i=1}^{M/G_N} \Lambda_G / C, N_M) \right\rfloor$$

where Λ_G is the total aggregate capacity of a group, C is the capacity of a wavelength, N_M is the maximum number of wavelengths that can be allocated, G_N is the group number, M is the total fan out of RN1, and $\lfloor x \rfloor$ represents the integer greater than x. In an AWG based RN1, the number of wavelengths allocated to a TDM-PON group does not exceed the maximum capacity per group. This condition is relaxed in a WSS based RN1. Note that we assume burst-by-burst switching (neglecting the tuning and the switching time) of the WSS based configuration. Currently, off-the-shelf WSSs are available with a switching speed of 250 ms and thus cannot be used to do burst-by-burst switching. Nevertheless, there have been proposals of the WSSs that can do fast switching in the order of nanoseconds. For example, the authors in [36] propose a wavelength flexible monolithic scheme for fast nanosecond-speed, on-the-fly reconfiguration using monolithically integrated label readers and channel selectors. Currently they are not commercially available and can be extremely expensive for deployment in access networks. However, in the years to come, on-the-fly reconfigurable WSSs with a low cost are expected.

Moreover, the performance degradation due to the tuning and the switching time of the components can be handled by a well-suited MAC protocol, but this is out of the scope of this paper. We have neglected the tuning and the switching time of all components. Paper [37] discusses some of the ways to alleviate the performance degradation due to the tuning and the switching time of the components.

8.3.5 Simulation results

As already mentioned, we have simulated five scenarios corresponding to different values of m_{AWG} and m_s. We first study the average number of wavelengths required as a function of the TDM-PON load for different group numbers. This study helps to understand the advantage of grouping users and the benefits of multicasting. We also show the impact of using a static vs. flexible router, e.g., an AWG vs. a WSS, on the average number of wavelengths required. Obviously, the WSS based RN1 should have an advantage over the AWG based RN1 because of its ability to dynamically distribute wavelengths.

We also study NOF and packet delay. We study the overloading condition in an AWG and a WSS based RN1 with different RN2 configurations. This study

helps to understand the advantage of switching and multicasting flexibility.

First, we show the simulation results for a TWDM-PON with less bursty traffic and then with supposedly highly bursty traffic.

8.3.5.a Less bursty traffic

We first show the average number of wavelengths required as a function of the TDM-PON load for different group numbers. As already mentioned, the importance of such a graph is to show how many wavelength line cards are needed. Figure 8.6a and b shows the average number of wavelengths required to satisfy the offered TDM-PON (or RN2) load in the five considered scenarios in the AWG and the WSS based RN1 respectively. First, we show that from the moment a certain degree of flexibility is available, large gains in wavelength usage are possible, but from a given point the extra gain is limited (the average number of wavelengths used from Group 4 to Group 16 is nearly the same). For example, the Group 2 already minimizes the number of wavelengths used largely as compared to a static solution. The gains of increasing the multicasting beyond Group 2, however, are less significant. We also see that, WSS based RN1 requires fewer wavelengths than an AWG based RN1, as WSS can reroute the wavelengths from one part of the network to the other part and does not need new wavelengths every time the load for TDM-PON increases.

We then evaluate NOF. Whenever the demands increase more than the resources (which are in the present case 16 wavelengths), the overloading occurs. Figure 8.6c gives the probability of an overloaded situation in an AWG and a WSS based RN1, expressed as NOF. We show that as the group number increases, the probability of an overloaded situation decreases, since in a larger group base we have flexibility to multicast more wavelengths to each TDM-PON. The WSS based TWDM-PON architectures, however, do not improve the NOF significantly. As the traffic is less bursty, the demands of different groups are nearly the same, and thus dynamic wavelength allocation does not give any clear benefit. Whenever there is an overloaded situation, the delay of the system will increase. Because of the same network overloading condition, both WSS and AWG based TWDM-PON architectures will also have the same delay performance (cf. Figure 8.6d). The lower bound of the delay equals 1.5 ms for the considered reach of 100 km (i.e. 3/2 of the cycle time [38] or 3/2 of the maximum round-trip time of the PON). The simulated traffic has a low peak-to-average load ratio of approximately 1.15 [i.e. $(Ar \times N \times S) / \Phi = 0.009 \times 4 \times 32$], and thus the delay is not high even at a heavy load.

8.3.5.b Highly bursty traffic

In this section, we show the simulation results for highly bursty traffic, which is mainly noticed in long reach PONs. Figure 8.7a and b shows the average number of wavelengths required to satisfy the offered TDM-PON (or RN2) load

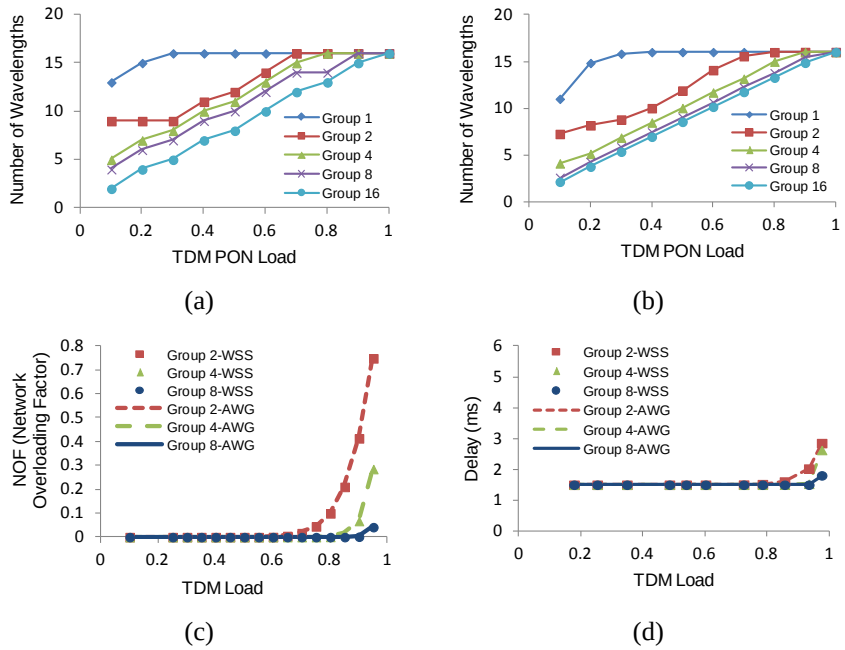

Figure 8.6: Illustrates the performance for five TWDM-PON variants with a different degree of flexibility in RN1 for less bursty traffic in (a) average number of wavelengths required in function of the TDM-PON or RN2 load in an AWG based RN1, (b) average number of wavelengths required in function of the offered TDM-PON or RN2 load in a WSS based RN1 (c) probability of an overloaded situation in a TDM-PON for varying load for WSS and AWG based configuration, (d) delay vs. load for TWDM-PON variants with a different degree of flexibility in WSS and AWG based RN1 configuration

in the AWG and WSS based RN1. There are many notable differences in the number of wavelengths required for highly bursty and less bursty traffic. First, in an AWG based RN1, the number of wavelengths required for all groups saturates much earlier to the maximum value (16) as compared to the case when the traffic is less bursty. Secondly, for a WSS based RN1, the average number of wavelengths required for all groups is almost the same in contrast to the less bursty traffic, where there is a significant difference in the number of wavelengths required for Group 1 (on an average three wavelengths) and Group 16 (on an average 15 wavelengths). This can be explained as in the bursty traffic, a user is “ON” for a smaller period and thus the probability of two users to be “ON” at the same time will be even less. Thus, at the light load condition, when the probability of a user to be in active state is less, grouping of users will not make any difference in the wavelength consumption as most of the time only one user of the group will be in “ON” state. If, however, the probability of a user to

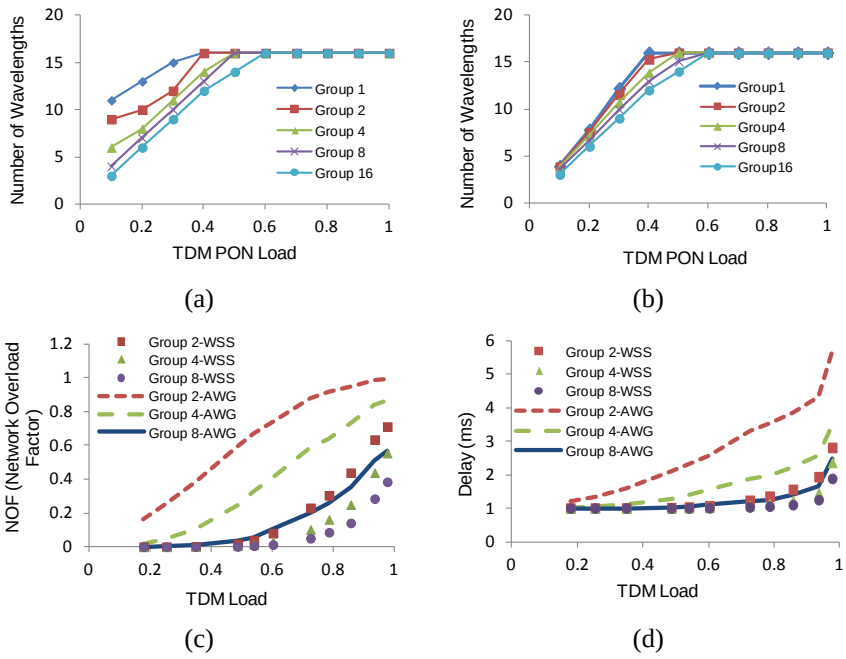

Figure 8.7: Illustrates the performance for five TWDM-PON variants with a different degree of flexibility in RN1 for highly bursty traffic in (a) average number of wavelengths required in function of the TDM-PON or RN2 load in an AWG based RN1, (b) average number of wavelengths required in function of the offered TDM-PON or RN2 load in a WSS based RN1, (c) probability of an overloaded situation in a TDM-PON for varying load for WSS and AWG based configuration, (d) delay vs. load for TWDM-PON variants with a different degree of flexibility in WSS and AWG based RN1 configuration

be “ON” is high (at a heavy load), multicasting has an impact.

Then, we investigate the influence of using a WSS and an AWG based RN1 on the network performance. Figure 8.7c gives the probability of an overloaded situation for both RN1 configurations. We can clearly see that the TWDM-PON employing WSS at RN1 is less overloaded as compared to the static TWDM-PON with AWG at RN1. When the traffic is bursty, the user demands vary significantly in a group and a WSS can dynamically allocate wavelengths according to the instantaneous group requirements. Thus, for a more bursty traffic, the dynamic wavelength configuration possible with WSS provides significant advantages. The configuration with WSS and Group 2 has less overloading probability than the configuration with an AWG and Group 4. From these results, we show that we can improve the flexibility of PON by adding an active remote node even with reduced power splitting.

Moreover, lower values of NOF lead to lower delay values as can be seen in Figure 8.7d. From the above results, it is clear that as the next-generation PONs aim for a higher reach, the WSS based configurations can give significant flexibility advantages. The availability of 1:23 port WSS with a low insertion loss [39] makes it even more promising for the next-generation PON solutions.

8.3.6 Conclusions

In this section, we have evaluated through simulation the gains of using flexible architectures in next-generation optical access (NGOA) networks, and more specifically in TWDM-PONs. In particular, we have evaluated two types of flexibility gains, due to multicasting and switching. We conclude that a partially flexible network can already provide enough multicasting gain compared to a fully flexible network. Moreover, we have shown through simulations that in long reach PON in which the traffic can be highly bursty, a partially flexible network further benefits from the switching flexibility, which can be delivered by a reconfigurable switch like WSSs. For short reach PON solutions, however, because of presumably less bursty traffic, switching wavelengths does not lead to any significant advantages in PON performance. Thus, if an operator is aiming for higher reaches, then using a reconfigurable remote node solution looks as a promising one. For short reach PON solutions, however, reconfigurability at the remote node may not be the way forward. Our study will help network operators and service providers to choose the suitable architecture for NGOA networks.

8.4 Partially flexible TWDM-PON

In this section, we propose the architecture of a partially flexible TWDM-PON. In the last section, we found that a partially flexible architecture with a degree of multicasting as two and a switching element could give most of the advantages of flexibility. In this section, we propose such a design of a partially flexible TWDM-PON. At RN1, we use a combination of WSSs and AWGs. We call this architecture as the wavelength switched TWDM-PON.

First, we discuss the system aspects and the advantages of the wavelength switched TWDM-PON, and then we compare cost, reach and power consumption of the wavelength switched TWDM-PON with other TWDM-PON architectures.

8.4.1 System aspects and advantages

Figure 8.8 shows the architecture of the wavelength switched TWDM-PON. At RN1, we assume a cascaded configuration of WSSs and AWGs. To compensate for the insertion loss of a WSS, we use EDFAs based reach extenders (RE). Two 1:K WSSs are used, for downstream and upstream,

respectively. The WSSs are used together with 1:M cyclic athermalized AWGs. The AWGs are of an M-skip-0 configuration. Both AWGs and WSSs are of a 50 GHz configuration. For a 40-channel configuration at the OLT, we use 1:4 WSS and 1:5 AWG. On an average, this configuration allows two wavelength channels at each output port of the AWG. This wavelength allocation, however, can be rearranged with a changing traffic requirement. As we discussed before, the traffic in a long-reach PON is bursty and thus there is a significant amount of energy saving that can be accrued due to re-routing wavelengths. Re-routing capacity leads to an improvement in the PON performance, minimizes wavelength consumption, and saves appreciable amount of energy. This on-demand re-routing can be easily implemented in the considered architecture. For example, on a high traffic demand from the users behind an AWG, all 40 channels can be fed to the AWG. This leads to about 8 channels per output port of the AWG. Similarly, when the demand from a TDM-PON is low, one of the two wavelengths can be switched off leading to energy efficiency.

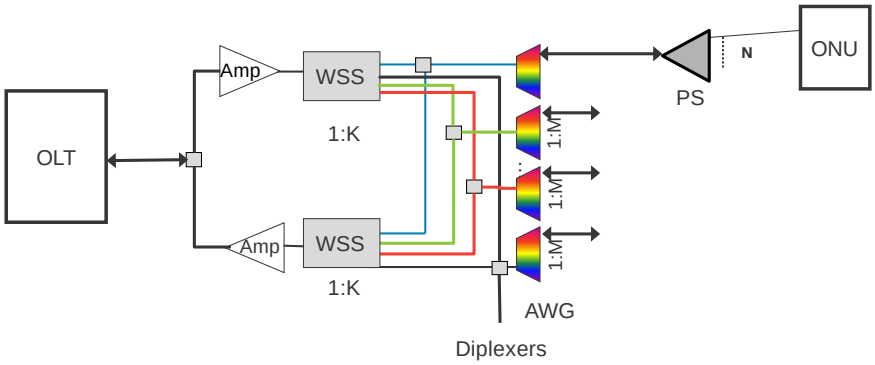

Figure 8.8: Wavelength switched TWDM-PON architecture

Furthermore, the considered architecture can be made more energy efficient by assuming special functionality, e.g., broadcasting or selective multicasting at the WSS. In the next section, we propose an energy saving scheme, which assumes WSSs capable of multicasting wavelengths selectively. This, however, requires advanced WSSs with a higher cost. In addition, multicasting increases the insertion loss of the wavelength that is multicasted. For example, a wavelength that is multicasted to two groups will experience an additional insertion loss of 3 dB.

The considered architecture has several additional advantages. For example, it helps operators to plan their network easily. An important aspect of network planning is to adapt the network to the requirements. There are many divergences in the requirements due to different scenarios, like urban and rural.

For example, an urban scenario requires a shorter reach and a higher splitting ratio whereas a rural scenario requires a longer reach and a smaller splitting ratio. Thus, the power splitters with different splitting ratios are required. Moreover, the power splitters with different splitting ratios also require wavelengths to be distributed differentially among the power splitters to ensure the same bandwidth delivery per customer. This differential wavelength feed can easily be routed by WSSs. The differential wavelength feed can also be used to provision narrowband services. For example, should there be many users behind a power splitter requiring a narrowband service, a fewer number of wavelengths can be fed to a power splitter. Thus, the ability of WSSs to route wavelengths at RN2 dynamically will ease the network planning according to the scenario and requirements.

8.4.2 Evaluation of wavelength switched TWDM-PON

In this section, we evaluate reach, cost and power consumption of the 40 and 80 channels wavelength switched TWDM-PON, and compare it to the wavelength selected and wavelength split TWDM-PON. For page space efficiency, wherever there is a difference between the configurations with 40 and 80 channels, we denote numbers corresponding to 80 channels in {}.

8.4.2.a Reach, power consumption and cost calculations for a wavelength switched TWDM-PON

We show the calculations of reach, power consumption and cost for wavelength switched TWDM-PON. We use 1:4 WSS and 1:5 {1:10} AWG in RN1, and 1:32 power splitter in RN2.

Reach: The insertion Loss (IL) of the above configuration is the sum of the IL for OLT, RN1, RN2, ONU, end-of-life (EOL) and connectors. The IL for the OLT is due to a C/L band-splitter (1.5 dB) and two {three} diplexers (3 {4.5} dB). 1:4 WSS (5.5 dB), 1:5 {1:10} AWG (4 dB), and two C/L band-splitters (3 dB) lead to the IL in RN1. The IL at RN2 is due to the use of 1:32 (17.5 dB) power splitter. At the ONU, the IL is due to a C/L band splitter. We assume an EOL and connector IL of 5.7 dB. This leads to the total IL of 41.7 {43.2} dB, as shown in the following equations:

$$\begin{aligned} IL_{OLT} &= IL_{BandSplitters} + 2\{3\} \times IL_{Diplexers} \\ &= 1.5\,\text{dB} + 2\{3\} \times 1.5\,\text{dB} = 4.5\{6\}\,\text{dB} \\ IL_{RN1} &= IL_{WSS} + IL_{AWG} + 2 \times IL_{BandSplitter} \\ &= 5.5\,\text{dB} + 4\,\text{dB} + 2 \times 1.5\,\text{dB} = 12.5\,\text{dB} \\ IL_{RN2} &= IL_{PowerSplitter} = 17.5\,\text{dB} \end{aligned}$$

$$IL_{ONU} = IL_{BandSplitter} = 1.5\,\text{dB}$$

$$IL_{EOL} + IL_{Connectors} = 5.7\,\text{dB}$$

$$IL_{Total} = IL_{OLT} + IL_{RN1} + IL_{RN2} + IL_{ONU} + IL_{EOL} + IL_{Connectors} = 41.7\{43.2\}\,\text{dB}$$

The 10 Gb/s transmitter at the OLT is assumed with a power level of 6 dBm, and the 10 Gb/s avalanche photo-diode (APD) receiver with forward error correction (FEC) is assumed with a sensitivity of -30 dBm. Use of booster (4 {2.5} dB) and RE (20 dB) leads to a total fiber budget of 18.3 {15.3} dB, which gives a reach of 54 {45} km. Following equations show the reach calculations:

$$\begin{aligned}\text{Reach} &= \frac{\text{FiberBudget}}{\text{FiberLoss}} = \frac{\text{TX} - \text{RX(withFEC)} + \text{Booster} + \text{RE} - \text{IL}_{\text{Total}}}{0.34\,\text{dB/km}} \\ &= \frac{6\,\text{dBm} - (-30\,\text{dBm}) + 4\{2.5\}\,\text{dB} + 20\,\text{dB} - 41.7\{43.2\}\,\text{dB}}{0.34\,\text{dB/km}} \\ &= 54\{45\}\,\text{km}\end{aligned}$$

Note that the booster gain is assumed such that the total power in the fiber does not exceed 21 dBm for the laser class 1M safety considerations. This restricts the total power in one channel to be below 5.5 {2.5} dBm.

Power Consumption and Cost: Table 8.A gives the cost and the power consumption of the OLT, RN1, RN2 and ONU, and the floor space for the OLT. The cost and power consumption values for various components and the floor space are from [40]. The cost values are normalized with the cost of a GPON ONU. The OLT is assumed with a shelf capacity of 20 slots, where two slots are reserved for uplink. The shelf includes mechanics, backplane, power supply (redundant), management and a layer 2 switch (modular). The layer 2 switch capacity per shelf can be incremented in 100 Gb/s steps.

8.4.3 Conclusions

In this section, we have proposed a novel architecture for TWDM- PON using WSS as the key component. Through a detailed reach and cost evaluation, we have shown that it provides the best combination of reach, flexibility, security and cost among all the existing TWDM-PON technologies.

Table 8.A: Cost and power consumption of system concepts of a 40 {80} channel wavelength switched TWDM-PON

OLT			RN1	RN2	ONU
10×10 Gb/s TRX Array TDMA: Cost: 4{8} × 26.26 Power: 4{8} × 20 W MAC: Cost: 40 {80}×2 Power: 40 {80} × 1W Diplexers: Cost: 7 {15} × 0.3 Shelf Space: 2 {4} slots	Shelf Port Cards: Cost: 4 {8} × 10 × 10 Gb/s × 0.1/Gb/s (port aggregator) + 6 {11} × 0.8 (mechanics for 12 {22} slots) Power: 4 {8} × 10 × 10 Gb/s × 0.5W/Gb/s (port aggregator) + 6 {11} × 10 (base for 12{22} slots) Shelfspace: 4{8} × 2 slots Booster and Pre-Amp: Cost: 2 × 15 Power: 2 × 12 W Shelf space: 2 slot	Shelf Space: Cost: 12 {22} slots × 5.56/slot Power: 12 {22} slots × 5 W/slot L2 switching: Shelf switch: 4 {8} × 10 × 10 Gb/s × 18 slots/12{22} slots =600 {700} Gb/s; Cards per shelf: 1.5 {0.8} Cost: 600 {700} Gb/s × 0.1/Gb/s/1.5{0.8} Power: 600 {700} Gb/s × 1W/Gb/s/1.5{0.8}	AWG (1:5{10}): Cost: 0.3 (per trib port) WSS (1:4): Cost: 2 × 104 Power: 2 × 5.5 W Diplexer: Cost: 5 × 0.3 Reach Extender: Cost: 2 × 20 Power: 2 × 50 W	Power Splitter 1:32: Cost: 6.6	CPE Mechanics: Cost: 0.6 Power: 3 W 10 Gb/s TDMA TRX (APD): Cost: 2.5 Power: 2.5 W

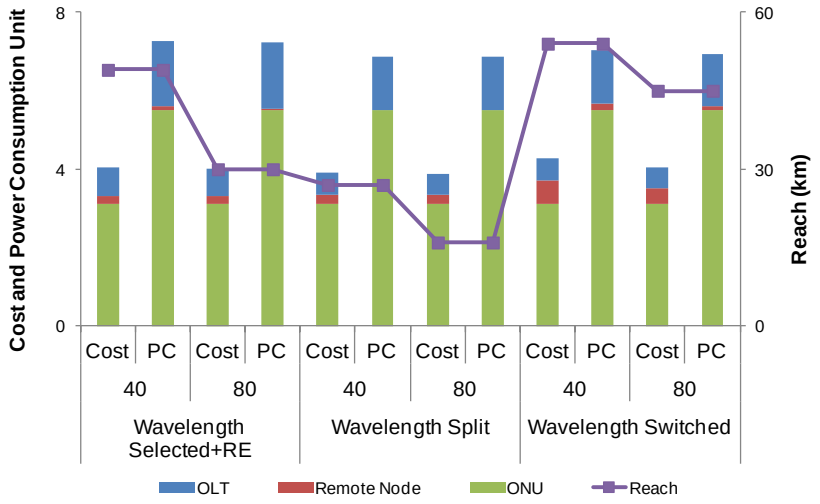

1 cost unit = 60 € and 1 PC unit = 1 Watt

Figure 8.9: Comparison of cost, power consumption and reach of considered TWDM-PON variants

8.5 Energy efficient DBA algorithm for wavelength switched TWDM –PON

In this section, we discuss the proposed DBA scheme, and analyze the energy savings possible because of that. As discussed in the last section, WSSs have a great potential to save energy because of their virtue to split wavelengths selectively. This selective splitting of wavelengths enables selective multicasting, and is utilized in the proposed algorithm. The basic idea of the proposed algorithm is to optimize the grouping of users on wavelengths, which leads to minimal use of wavelengths and save energy. The number of ONUs that can be grouped on a wavelength is limited by either the data rate or the distances of the ONUs from the OLT. For example, should the offered load of the ONUs is light, many nearby ONUs can be served using a single wavelength. As the load increases, however, not all previously grouped ONUs can be served by the same wavelength, and the group of ONUs has to be allocated an additional wavelength. For distant ONUs, the wavelength cannot undergo a high splitting, as otherwise the fiber budget considerations cannot be met.

Figure 8.10 shows the grouping of ONUs on a wavelength based on their distances from the OLT. For example, let us assume that on the first port of the AWGs, nearby ONUs are connected over a power splitter. Since, the distances of these ONUs from the OLT is short, the power budget is less constrained and thus

these groups of ONUs can be served on a single wavelength if the offered load of the ONUs is light. Nevertheless, when the load of the ONUs becomes heavy, the assured throughput of every ONU cannot be met. Hence, as soon as the load of the ONUs increases, these ONUs have to be allocated additional wavelengths. For the ONUs that are far, a higher splitting of one wavelength does not meet the power budget requirements, and hence distant ONUs require more number of wavelengths even at a light load. This policy of grouping ONUs based on their distances, while still satisfying the data rate requirements of the ONUs, increase the number of customers served on the a wavelength and reduce the power consumption per customer. In this way, we minimize the use of transceivers and switch them off, leading to the savings in energy consumption. We call this approach as the data and distance based grouping (D&DBG).

For the analysis, we assume that the wavelengths could be switched off in the granularity of a transceiver array, and a switched off transceiver array also minimizes energy consumption due to shelf port cards, shelf space and layer 2 switching. Currently, the OLT rack design does not support individual powering off the slots; we assume, however, that in the near future such a design should be made possible to conserve energy.

Moreover, we assume that the layer 2 switches of smaller capacity are individually connected to a TRXA, so that it is possible to turn them on/off according to the TRXA requirement. Figure 8.11a shows the energy consumption of the OLT with the number of wavelengths used. The energy consumption variation is a step function as the wavelengths can be turned off in the granularity of the number of wavelengths in a transceiver array. Nevertheless, to harness better energy efficiency gains, the individual shut down of each channel should be the primary design goals of these multi-channels arrays.

Figure 8.11b shows the energy consumption of the OLT when the ONUs are grouped on the same wavelength according to the distances still satisfying the data rate of the users. For this result, the ONUs are assumed to be distributed uniformly between 20 and 100 km. The 100 % is the energy consumption when all transceivers are on. Without the use of D&DBG approach, in normal mode, there is already energy saving of about 50 % at the low data rate because of the flexibility of the architecture. With D&DBG approach, the energy consumption is further reduced to only 40 %. The savings at OLT also save power for cooling, and reduce operational expenditure of the network provider. The power for cooling is typically the double of the system power used.

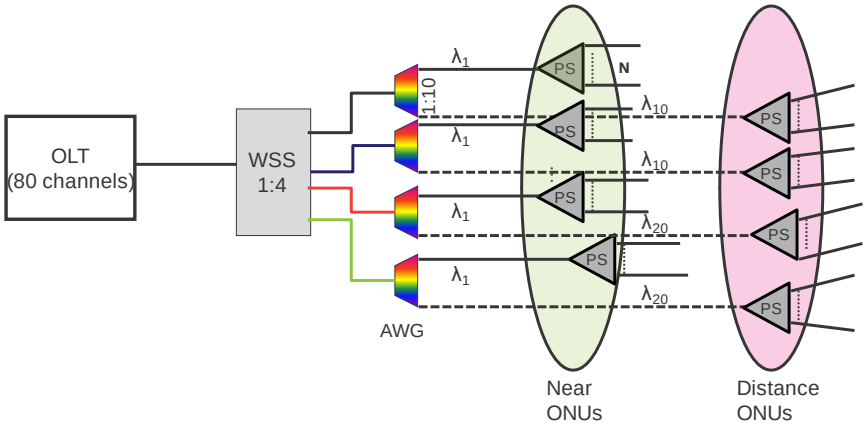

Figure 8.10: Illustrates the grouping of users on a wavelength based on their distances from the OLT

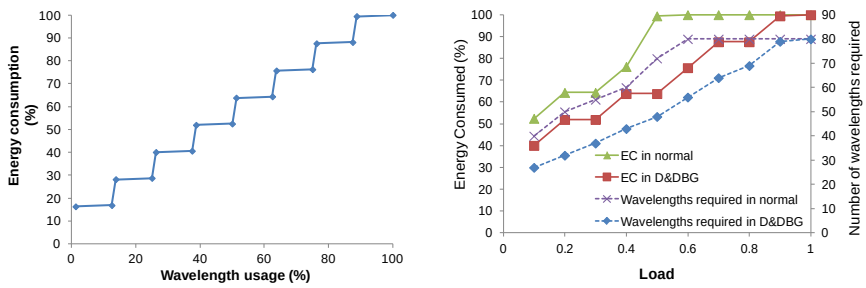

(a) (b)

Figure 8.11: a) Variation of energy consumption with wavelength usage at the OLT b) energy consumption (EC) and the number of wavelengths required in normal and data and distance based grouping (D&DBG) approach: energy consumption shown using vertical right axis and the number of wavelengths required shown using dashed lines and vertical left axis

8.6 Conclusions

Hybrid TDMA/WDMA (TWDM) passive optical networks (PON) have emerged as one of the important next-generation optical access (NGOA) solutions. These solutions can further be complemented by adding flexibility, which reflects the dynamicity of resource sharing. There are two options to provide flexibility in the network: using power splitters, and using wavelength routing switches, e.g., wavelength selective switches (WSS). Power splitters broadcast wavelengths to users, providing multicasting gains, which increase wavelength utilization and energy savings. On the other hand, WSSs can route

traffic to the more congested part of the network, furnishing the gains of load balancing. The flexibility due to WSSs is referred as switching flexibility. From exhaustive simulations, we conclude that a partially flexible network can already provide enough multicasting gains compared to a fully flexible network. Moreover, a partially flexible network further benefits from the switching flexibility, particularly in the scenario where the traffic is highly bursty. Further, we proposed a partially flexible solution, based on a cascaded configuration of WSS and arrayed waveguide grating (AWG), which is called as wavelength switched TWDM-PON. The wavelength switched TWDM-PON accrues flexibility advantages without adding significant cost, power consumption and insertion loss. Finally, we also proposed an energy saving scheme for wavelength switched TWDM-PON that has the potential of saving up to 60% energy at the OLT.

Acknowledgements

The research leading to these results has received funding from the European Community's Seventh Framework Programme (FP7/2007-2013) under Grant agreement n° 249025 (ICT-OASE), and Grant agreement n° 257740 (Network of Excellence TREND).

References

[1] ITU-T Recs. G.983, BPON; G.984, GPON.

[2] IEEE Stds. 802.3ah, Ethernet First Mile (EFM); 802.3av, 10GEPON.

[3] Global passive optical network equipment market 2010-2014

[Online] Available at: http://www.researchandmarkets.com/research/267627/global_passive_opt

[4] L. Kazovsky, S. W. Wong, S. H. Yen, V. Gudla, P. Afshar, and D. Larrabeiti, “Next-Generation optical access networks: goals, challenges and research opportunities,” *Acreo/KTH Seminar*, 2010.

[5] 249025-ICT OASE Project, D2.1: Requirements for European next-generation optical access networks.

[6] Y. Luo, X. Zhou, F. Effenberger, X. Yan, G. Peng, Y. Qian, and Y. Ma, “Time and wavelength division multiplexed passive optical network (TWDM-PON) for next generation PON stage 2 (NG-PON2),” *IEEE/OSA Journal of Lightwave Technology*, vol. 31, no. 4, pp. 587-593, 2013.

[7] A. Dixit, B. Lannoo, G. Das, D. Colle, M. Pickavet, and P. Demeester, "Evaluation of flexibility in hybrid WDM/TDM PONs," in *IEEE International Symposium on Access Spaces (ISAS)*, 2011.

[8] A. Dixit, B. Lannoo, G. Das, D. Colle, M. Pickavet, and P. Demeester, "Flexibility evaluation of hybrid WDM/TDM PONs," in *IEEE Advanced Networks and Telecommunications System (ANTS)*, 2011.

[9] M. Ruffini, D. Mehta, B. O"Sullivan, L. Quesada, L. Doyle, and D. B. Payne, "Deployment strategies for protected long-reach PON," *IEEE/OSA Journal of Optical Communication Network*, vol. 4, no. 2, pp. 118-129, 2012.

[10] R. D. Feldman, "Crosstalk and loss in wavelength division multiplexed systems employing spectral slicing," *IEEE/OSA Journal of Lightwave Technology*, vol. 15, no. 11, pp. 1823-1831, 1997.

[11] P. Healey, P. Townsend, C. Ford, L. Johnston, P. Townley, I. Lealman, L. Rivers, S. Perrin, and R. Moore, "Spectral slicing WDM-PON using wavelength-seeded reflective SOAs," *Electron. Letters*, vol. 37, no. 19, pp. 1181–1182, 2001.

[12] S.-J. Park, C.-H. Lee, K.-T. Jeong, H.-J. Park, J.-G. Ahn, and K.-H. Song, "Fiber-to-the-home services based on wavelength-division multiplexing passive optical network," *IEEE/OSA Journal of Lightwave Technology*, vol. 22, no. 11, pp. 2582–2591, 2004.

[13] D. J. Shin, D. K. Jung, H. S. Shin, J. W. Kwon, S. Hwang, Y. Oh, and C. Shim, "Hybrid WDM/TDM-PON with wavelength-selection-free transmitters," *IEEE/OSA Journal of Lightwave Technology*, vol. 23, no. 1, pp. 187-195, 2005.

[14] L. Y. Chan, C. K. Chan, D. T. K. Tong, F. Tong, and L. K. Chen, "Upstream traffic transmitter using injection-locked Fabry–Pérot laser diode as modulator for WDM access networks," *Electronics Letters*, vol. 38, no. 1, pp. 43-45, 2002.

[15] N. J. Frigo, P. P. Iannone, P. D. Magill, T. E. Darcie, M. M. Downs, B. N. Desai, U. Koren, T. L. Koch, C. Dragone, H. M. Presby, and G. E. Bodeep, "A wavelength-division multiplexed passive optical network with cost-shared components," *IEEE Photonics Technology Letters*, vol. 6, no. 11, pp. 1365-1367, 1994.

[16] L. Altwegg, A. Azizi, P. Vogel, Y.Wang, and F.Wyler, "LOCNET: a fiber in the loop system with no light source at the subscriber end," *IEEE/OSA Journal of Lightwave Technology*, vol. 12, no. 3, pp. 535-540, 1994.

[17] K. Iwatsuki, J.-I. Kani, H. Suzuki, and M. Fujiwara, "Access and metro networks based on WDM technologies," *IEEE/OSA Journal of Lightwave Technology*, vol. 22, no. 11, pp. 2623-2630, 2004.

[18] G. Talli and P. D. Townsend, "Feasibility demonstration of 100 km reach DWDM super-PON with upstream bit rates of 2.5 Gb/s and 10 Gb/s," in *Optical Fiber Communication (OFC)*, 2005.

[19] A. Dixit, B. Lannoo, D. Colle, M. Pickavet, and P. Demeester, "Wavelength switched hybrid WDM/TDMA PON: A flexible next-generation optical access solution," in *IEEE International Conference of Transparent Optical Network (ICTON)*, 2012.

[20] J. Kani, S. Shimazu, N. Yoshimoto, and H. Hadama, "Energy-efficient optical access networks: issues and technologies," *IEEE Communications Magazine, vol.* 51, no. 2, pp. S22 - S26, 2013.

[21] G. Das, B. Lannoo, D. Colle, M. Pickavet, and P. Demeester, "A hybrid WDM/TDM PON architecture using wavelength selective switches," in *IEEE Advanced Networks and Telecommunications System (ANTS)*, 2010.

[22] G. Das, B. Lannoo, A. Dixit, D. Colle, M. Pickavet, and P. Demeester, "Flexible hybrid WDM/TDM PON architectures using wavelength selective switches," *Optical Switching and Networking*, vol. 9, no. 2, pp. 156-169, 2012.

[23] C. Bock, J. Prat, and S. D. Walker, "Hybrid WDM/TDM PON using the AWG FSR and featuring centralized light generation and dynamic bandwidth allocation," *IEEE/OSA Journal of Lightwave Technology*, vol. 23, no. 12, pp. 3981-3988, 2005.

[24] K. Grobe, M. Roppelt, A. Autenrieth, J. P. Elbers, and M. Eiselt, "Cost and energy consumption analysis of advanced WDM-PONs," *IEEE Communications Magazine*, vol. 49, no. 2, pp. s25 - s32, 2011.

[25] N. C. Tran, H. D. Jung, C. Okonkwo, E. Tangdiongga, and T. Koonen, "A 10 Gb/s passive-components-based WDM-TDM reconfigurable optical access network architecture," in *Optical Fiber Communication Conference and Exposition (OFC/NFOEC)*, 2011.

[26] N.C. Tran, H.D. Jung, C. Okonkwo, E. Tangdiongga, and T. Koonen, "ARON: A SOA array-based WDM-TDM reconfigurable optical access network," in *Future Network & Mobile Summit*, 2010.

[27] P. J. Urban, B. Huiszoon, R. Roy, M. M. de Laat, F. M. Huijskens, E. J. Klein, G. D. Khoe, A. M. J. T. Koonen, and H. de Waardt, "High-bit-rate dynamically reconfigurable WDM–TDM access network," *IEEE/OSA*

Journal of Optical Communications and Networking, vol. 1, no. 2, pp. A143 – A158, 2009.

[28] S. H. Yen, M. Tendulkar, J. R. Jameson, S. Yamashita, Y. Nishi, O. Solgaard, and L. G. Kazovsky, "Quasi-passive and reconfigurable node for optical access network," in *Lasers and Electro-Optics (CLEO) and Quantum Electronics and Laser Science Conference (QELS)*, 2010.

[29] B. Lannoo, G. Das, A. Dixit, D. Colle, M. Pickavet, and P. Demeester, "Novel hybrid WDM/TDM PON architectures to manage flexibility in optical access networks," *Telecommunications System Journal*, vol. 54, no. 2, pp. 147-165, 2013.

[30] A. Dixit, B. Lannoo, G. Das, D. Colle, M. Pickavet, and P. Demeester, "Evaluation of ONU power saving modes in next generation optical access networks," in *European Conference on Optical Communications (ECOC)*, 2012.

[31] A. Dixit, B. Lannoo, D. Colle, M. Pickavet, and P. Demeester, "ONU power saving modes in next generation optical access networks: progress, efficiency and challenges," *Optics Express*, vol. 20, no. 26, pp. B52-B63, 2012.

[32] A. Dixit, B. Lannoo, G. Das, D. Colle, M. Pickavet, and P. Demeester, "Dynamic bandwidth allocation with SLA awareness for QoS in Ethernet passive optical networks," *IEEE/OSA Journal of Optical Communications and Networking*, vol. 5, no. 3, pp. 240-253, 2013.

[33] W. Willinger, S. M. Taqqu, R. Sherman, and D. V. Wilson, "Self-similarity through high variability: statistical analysis of Ethernet LAN traffic at the source level," *IEEE/ACM Transactions on Networking*, vol. 5, no. 1, pp. 71-86, 1997.

[34] W.E Leland, S. M. Taqqu, W. Willinger and D. V. Wilson, "On the self-similar nature of Ethernet traffic," *IEEE/ACM Transactions on Networking*, vol. 2, no. 1, pp. 1-15, 1994.

[35] G. Das, B. Lannoo, D. Jung, T. Koonen, D. Colle, M. Pickavet, and P. Demeester, "A new architecture and MAC protocol for fully flexible hybrid WDM/TDM PON," in *European Conference on Optical Communications (ECOC)*, 2009.

[36] A. Rohit, A. Albores-Mejia, N. Calabretta, X. J. M. Leijtens, D. J. Robbins, M. K. Smit and K. A. Williams, "Fast remotely reconfigurable wavelength selective switch," in *Optical Fiber Communication Conference and Exposition (OFC/NFOEC)*, 2011.

[37] J. Zhang, and N. Ansari, "Scheduling hybrid WDM/TDM passive optical networks with nonzero laser tuning time," *IEEE/ACM Transactions on Networking*, vol. 19, no. 4, pp. 1014-1027, 2011.

[38] B. Lannoo, L. Verslegers, D. Colle, M. Pickavet, M. Gagnaire, and P. Demeester, "Analytical model for the IPACT dynamic bandwidth allocation algorithm for EPONs," *Journal of Optical Networking*, vol. 6, no. 6, pp. 677-688, 2007.

[39] Flexible wavelength selective switches (WSS) for advanced network architectures and for advanced network architectures and modulation formats [Online] Available at: http://www.ofcnfoec.org/osa.ofc/media/Default/PDF/2009/09-Poole.pdf

[40] 249025-ICT OASE Project, D4.2.1: Technical assessment and comparison of next-generation optical access system concepts, Oct. 2011.

9
Conclusions

Be yourself and think for yourself; and while your conclusions may not be infallible, they will be nearer right than the conclusions forced upon you.

−ELBERT HUBBARD

Broadband access networks need to evolve continually to serve ever-increasing bandwidth requirements. While the use of optical technologies to facilitate bandwidth-intensive services is undisputed, the design of novel architectures and dynamic bandwidth allocation (DBA) algorithms is still an open question. In addition to scaling the capacity to the users' requirement, the design has to be cost efficient to attract the interest of network operators. This fundamental design principle ferments an umbrella of converging requirements, like a better quality of service (QoS), a longer reach between the central office (CO) and the users, a higher energy efficiency, resilience, and open access. In this dissertation, we explored the manifestation of these requirements in optical access networks.

In the next sub-sections, we outline the contributions of the performed research, and contextualize it according to the recent trends in future network architectures, enabling directions for future work. For simplicity, we divide our discussions in three domains: DBA algorithms, next generation optical access

(NGOA) architectures, and other research perspectives.

9.1 Dynamic bandwidth allocation algorithms

The evolution of the networks poses new challenges on a medium access control (MAC) layer and requires new DBA algorithms for an optimal QoS and for ensuring a fair and an efficient bandwidth distribution. We contributed to the following research areas:

Delay Models − We conducted a thorough analytical modeling to benchmark the delay performance of the DBA algorithms in EPON. For this analysis, we examined the effects of different approaches: Gated, Limited, Report after Data, Report before Data, and Multi-thread Polling (MTP). The main conclusion from this study is that though all these approaches provide some incremental differences, they suffer from a main problem − which is that the approaches poll and grant bandwidth in the granularity of the round trip time (RTT) between the optical line terminal (OLT) at the CO and the optical network units (ONUs) at the user's premises. The longer distances between the CO and the ONUs increase the time in which the control messages (used for bandwidth allocation) can be exchanged between them. This increased time has serious implications on the QoS performance, as the packet delay (only including queuing delay) degrades significantly with an increasing reach. We also noted that MTP does not improve the performance at all, when compared to the other online algorithms.

As a future research direction, this model can be developed for offline algorithms, in which an OLT stops between every cycle to first collect the REPORTs from all ONUs before arriving at bandwidth allocation decisions.

Long-Reach − To tackle the performance degradation in long-reach passive optical networks (LR-PONs), we proposed an algorithm, referred to as synergized adaptive multi-gate polling with adaptive cycle time (S-AMGAV). The main idea of this algorithm is the optimal combination of load-dependent polling and the load-dependent pre-grant sizing. For load-dependent polling, we issue parallel GATE messages to an ONU, and the number of GATE messages depends upon various factors, most importantly the network load. For load-dependent pre-grant sizing, we pre-grant bandwidth to an ONU, and the fraction of the bandwidth that is pre-granted depends upon the network load. We used extensive analytical modeling to determine the optimal combination of these two approaches, which also determines the number of GATE messages and the fraction of the pre-granted bandwidth. We compared S-AMGAV with a number of the state-of-the-art (SotA) algorithms, and clearly demonstrated the large gains in both delay performance and channel utilization (at least 50% improvement compared to the SotA) in S-AMGAV. With the improved (almost

reach independent) performance, S-AMGAV can offer a high QoS at both heavier loads and for longer reach.

The extension of S-AMGAV to provide differentiated services to different classes of service is an interesting future exploration.

Energy Efficiency − Another challenge that becomes more prominent as the systems evolve toward higher line rates is energy consumption. Due to higher line rates, the systems will inherently become more power consuming. This is because of the impact of the increased line rate on transceivers, system on chip (SoC) and the layer-2 switch design. Thus, for the evolved systems, power efficiency will become more important. One important technique to reduce energy consumption is sleep modes. In sleep modes, non-essential functionalities are turned off, which have a potential to save a significant amount of energy. The implementation of sleep modes however poses some interesting problems, like when and for how long components should be in sleep. The sleep period affects sleep efficiency and QoS, and in turn depends on sleep overheads. Advanced ONUs (next generation) use clever transceiver designs and offer a much lower overhead (in the order of nanoseconds), whereas legacy components have a much higher overhead (couples of milliseconds). This required a DBA algorithm to optimize the sleep periods according to these (for both types of ONUs) overheads for maximum efficiency. In this context, we proposed a novel energy saving algorithm, referred to as sleep mode aware (SMA), for two kinds of the ONUs: next generation ONUs (NG-ONUs) and legacy ONUs (L-ONUs). For NG-ONUs, we proposed a novel sleep-period prediction scheme and four grant-sizing possibilities, according to the buffer backlog of the up- and the downstream traffic, namely: upstream centric (UC), upstream and downstream centric (UDC), void aware (VA), and the minimum sleep time (MST). The MST approach is found to be most useful for maintaining the delay bound and simultaneously reducing frequent mode switching. In the proposed approaches, an ONU remains in sleep state for about 70-93%, leveraging energy savings of about 50-70%.

On the other hand, L-ONUs require sleep periods much larger than the cycle time. For them, we proposed a novel paradigm by which an ONU can quit the sleep mode on the arrival of high-priority traffic and can thus meet strict QoS requirements. The simulation results show that the algorithm induces minimal performance degradation to high-priority upstream traffic while achieving average energy savings of about 40%.

How could this SMA algorithm be combined with other power saving mechanisms, like energy efficient Ethernet, to improve the overall power savings is an interesting point of exploration. Moreover, the effects of this combination on the performance of higher layers, like TCP, can be studied.

Evaluation of Energy Saving Modes − We also used the SMA algorithm to

estimate the sleep mode potential[36] in the different NGOA technologies. For this evaluation, we consider Ethernet PON (EPON), 10G-EPON, 40G-time division multiple access PON (TDMA-PON), wavelength division multiplexing (WDM) PON, time and wavelength division multiplexed PON (TWDM-PON), point-to-point (PtP) and active optical network (AON). Different technologies have different up- and downstream line rates and thus have different sleep periods. We found that the technologies with a higher burst transmission (ratio of peak to average transmission rate) have a higher potential to sleep and thus they benefit more from sleep modes. This is an interesting observation for designing an optimal next generation technology. For example, technologies like TWDM-PON and 40G-TDMA-PON have a higher power consumption in active states compared to WDM-PON but as the ONUs in TWDM-PON and 40G-TDMA can sleep for more periods, they would attain a similar (or even lower) power consumption. An additional point to note is that currently TDMA-PONs need to use burst mode technologies for a faster on/off of the transmitters. This functionality nevertheless fits ideally with the requirements of sleep mode, and thus TDMA-PONs have lower sleep overheads compared to continuous mode transmission and reception technologies like WDM-PON, AON and PtP. For used simulation values and different technologies, doze mode reduces energy consumption between 50% and 75%, whereas sleep mode reduces energy consumption between 72% and 95%.

A limitation of this work is that currently the SMA algorithm, which is optimized for TDM-PONs, is used for the evaluation of all technologies. As a future work, an optimal algorithm for each technology should be developed and used.

9.2 Architectures

For architectural design, we extended protection, open access, and flexibility in the NGOA architectures. For resilience and open access, we start with WDM- and TWDM-PON, which have been accepted by the full service access network (FSAN) as the primary and the secondary candidate of the next generation PON architecture respectively. For extending flexibility, we proposed a new architecture configuration of TWDM-PON that uses active components in the remote node (RN) at the street cabinet.

Reliability − To design the reliability schemes, we first identify the most critical elements for protection. Active components (e.g., OLT, ONU) and feeder fiber (FF) have a high unavailability, and thus need protection first. However, protecting every ONU would not be cost-efficient and thus it should only be

[36] We would like to make a note that the utility of sleep mode to reduce energy consumption was only explored for ONUs.

protected for business users. Network operators have to pay a penalty for the service loss to business users, and this cost of penalty makes the overall cost of ownership higher in case the architectures are not protected. Thus, business users must be assured availability as high (close to five nines) as possible. On the other hand, residential users do not want to pay for the extra cost of protection, and thus they must be shielded from a cost increase. For protection, we propose four reliability schemes. These reliability schemes guarantee full protection to business users, and OLT and FF protection to residential users. Moreover, for appropriately evaluating network reliability performance, we proposed a new metric for reliability evaluation, referred to as the failure impact (FI). The FI gives more weight age to large failures vis-a-vis many uncorrelated small failures, when both lead to the same average failure time. The FI thus captures an irrational environment in which the network operators are more worried about large failures to avoid negative press releases. The proposed schemes are analyzed in different populated scenarios for protection coverage, availability, FI and cost. The protection schemes achieve an availability of more than four nines for business users, with a best-case availability of 0.99998. This is a satisfactory value of availability as currently aggregation networks are also built with an availability of 4 nines. There is a negligible difference between the unavailability of WDM- and TWDM-PON. Nevertheless, we notice a much higher FI for TWDM-PON because of a higher customer aggregation. The FI depends upon α (irrationality factor), which was chosen intuitively for this study. In future, α can be defined analytically by measuring the correlation of big failures and their economic impacts. According to the cost analysis, we recommend protection to minimize the overall cost of ownership, when the network operators pay a cost penalty of more than 0.06 cost unit/hour.

Open Access − We also proposed architectures to support fiber and wavelength open access in WDM- and TWDM-PON. Fiber and wavelength open access pose challenges on the architectural design and need new architectures. We identified two interfaces at which the networks can be opened – the RN and the OLT. These networks can be opened using additional points of unbundling (PoUs), which are defined as the extra facility or the physical points where the extra facility is provided for enabling open access. At the RN interface, the network can be opened using optical distribution frame (ODF), distribution fiber (DF) or wavelength access filter (WAF) as PoU; at the OLT, the network can be opened using band splitter (BS), manual wavelength router (MWR), wavelength selective switch (WSS), power splitter (PS), and FF as PoU. These solutions have their design tradeoffs. For example, the solutions using ODF and MWR require fiber patching and are sensitive to the churn rate. The solutions with WAF and WSS use elements that are more costly, the solution with PS violates security, and the solution with BS cannot allocate the spectrum dynamically among the NPs. On the other hand, the solutions with DF and FF require a fiber-

rich scenario. Furthermore, in TWDM-PON, there are additional security challenges, as the broadcasting nature of a PS violates inter-NP isolation. The complexity of the design tradeoffs requires an in-depth analysis of the effects of the design tradeoffs on the cost of the network. Contrary to the general perception, we found that the use of manual wavelength routing based solutions is feasible from the cost perspective as the option with ODF as PoU at the RN interface leads to the lowest cost. At the OLT interface, the solution with MWR as PoU for WDM-PON and the solution with BS as PoU for TWDM-PON are the most cost effective.

For open access, higher layer solutions based on layer 2/layer 3 can be further explored in more detail. This also leaves more opportunities for software-defined networking (SDN) in optical access networks.

Flexibility – First, we explored the optimal degree of flexibility that is actually needed. We have shown that from the moment a certain degree of flexibility is available, large gains in terms of wavelength usage are already possible, and beyond a certain point, additional flexibility does not provide much benefit in terms of wavelength consumption. We thus conclude that a partially flexible network can already provide enough multicasting gain compared to a fully flexible network. Moreover, we have shown through simulations that in long reach PON, where the traffic can be highly bursty, a partially flexible network may further benefit from the switching flexibility which can be delivered by a reconfigurable switch like WSSs. However, for short reach PON solutions, due to presumably less bursty traffic, switching functionality will not lead to any significant advantages in PON performance. Thus, if an operator is aiming for higher reaches, then using a reconfigurable remote node solution looks like a promising one. However, for short reach PON solutions with less customer aggregation, reconfigurability at the remote node may not be the way forward. Our study will help network operators and service providers to choose the most suitable architecture for NGOA networks.

Furthermore, we also proposed a new TWDM-PON variant that we referred to as wavelength switched TWDM-PON that uses a cascaded configuration of WSSs and AWGs. This architecture has partial flexibility and thus can accrue significant advantages – network updates, planning and energy efficiency. In addition, we compare the wavelength switched TWDM-PON with other TWDM-PON variants and found that the wavelength switched TWDM-PON achieves the most optimal combination of cost, power consumption and insertion loss. Finally, we also proposed an energy saving scheme for wavelength switched TWDM-PON that has the potential of saving up to 60% energy at the OLT.

9.3 Other research perspectives

The work done in this dissertation can be extended in many ways. An interesting direction could be to combine solutions, leading to more complete solutions. For example, the DBA algorithms for long reach PONs and energy efficiency can be combined together to provide a more holistic solution. Similarly, the architectural solutions, which are now presented to meet one of the requirements, can be combined together to meet all the requirements. This integration may pose some other interesting problems, and may require modifications in the existing solutions.

Another direction could be to look into more advanced system concepts: orthogonal frequency division multiplexed (OFDM) based solutions, ultra dense WDM solutions, etc. At this time, these advanced solutions suffer from a high cost, as there is still a lot of scope to optimize these solutions from a hardware perspective. Nevertheless, these solutions may become cost-competitive in the future, and thus they could be investigated as a future work.

An interesting future direction could be to explore the possibilities of fiber and wireless convergence. Due to the costs of supplying optical fiber to all end-user premises and the spectrum limitations of wireless access networks, fiber-wireless access networks seem to be more attractive than relying on either standalone access solution. This raises interesting problems like that of an optimal converged MAC protocol and of fiber-wireless architectures.

A

Towards Energy Efficiency in Optical Access Networks

The Internet is so big, so powerful and pointless that for some people it is a complete substitute for life.

−ANDREW BROWN

In this appendix, we extend the work presented in Chapter 4 to include the power consumption of different technologies at both the optical line terminal (OLT) and the optical network units (ONUs).

Abhishek Dixit, Sofie Lambert, Bart Lannoo, Didier Colle, Mario Pickavet, and Piet Demeester.

Published in Proceedings of IEEE Advanced Network and Telecommunications Systems (ANTS), Chennai, 2013.

Abstract—A continual increase in bandwidth consumption stimulates the need for next generation optical access (NGOA) networks, which should also conform to the societal green agenda. Currently, the access segment consumes a major fraction (about 67%) of the energy consumption in end-to-end fiber-to-the-home (FTTH) based telecommunication networks, and thus the energy consumption of access networks remains a crucial concern. In this paper, we present a thorough analysis of energy consumption in various NGOA technologies. In this analysis, we have also accounted the effects of low power modes (e.g., sleep modes) and the use of optimal split ratios for the considered technologies on the energy consumption.

A.1 Introduction

Evolution of access networks is paramount to meet the requirements of increasing data rates while still optimizing the investments of network operators. A variety of network technologies have been investigated to meet the demands of next-generation optical access (NGOA) networks. Section A.2 provides a comprehensive insight into these technologies. An important benchmarking criterion for evaluation of these networks is energy efficiency. Energy efficiency is important for minimizing the operational expenditures of network providers as well as for reducing environmental impacts by minimizing carbon emissions. Currently, the access segment (including customer premises equipment) consume a major fraction (67%) of the energy consumption in fiber-to-the-home (FTTH) based telecommunication networks, and optical network units (ONUs) at the users' premises consume about 60 % of the energy (Figure A.1). Optical line terminals (OLTs) at the central offices consume about 7% of the energy. Thus, overall significant energy savings can be procured by saving energy in access networks.

ONUs consume the major portion (90%) of the energy consumed in optical access networks, and several low power modes have been actively considered at the ONUs, e.g., sleep modes and doze modes. Low power modes have the potential to save a significant amount of energy at the ONUs [7]. In these modes, whenever there is no traffic to receive/send, non-essential functionalities are turned off at the ONU's end.

The energy consumption at the OLT could be reduced by using transceivers at high utilization, which can be accomplished by using a high split ratio per transceiver. This leads to higher aggregation levels at the OLT, minimizing traffic burst and leading to better utilization of the resources. Note that the transceiver utilization can also be increased by sharing a transceiver among many PON segments at the OLT, increasing broadcasting in the network, and provisioning capacity according to the network load. The gains of these effects are evaluated exhaustively in [2] and are thus omitted in this paper.

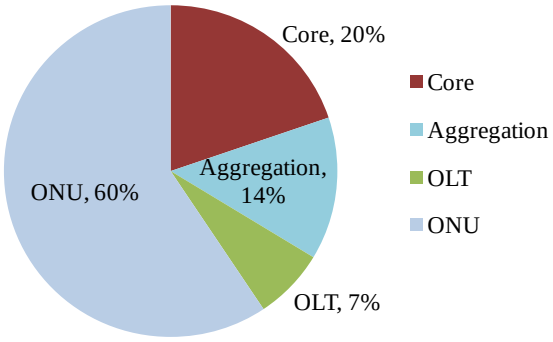

Figure A.1: Contributors of the energy consumption in FTTH networks [3]

The energy efficiency approaches at both the ONU and OLT are detailed in section A.3. The evaluation approach and the results of the evaluation are presented in section A.4 and in section A.5 respectively, and finally the study is concluded in section A.6.

A.2 Next generation optical access networks

Different technologies are widely considered as NGOA candidates, such as: 40G- passive optical network (XLG-PON), wavelength division multiplexed (WDM) PON, time and wavelength division multiplexed PON (TWDM-PON), point-to-point (PtP) and active optical network (AON) [7]. We compare these NGOA solutions with each other and with the current state-of-the-art time division multiplexed (TDM) solutions like GPON and XG-PON.

The basic differences among various technologies are the ways in which a user (or an ONU) connects to the OLT, and accesses the network resources. The network architecture of these solutions is quite different and employs a different set of functionalities, giving rise to system-specific power consumptions. Now, we discuss each architecture in more detail:

TDM-PONs: In TDM-PONs, the OLT accesses the ONUs using a TDM protocol over a power splitter. All ONUs receive an identical signal, from which each ONU selects the data in its allocated time slots. The examples of TDM based PONs are: XLG-PON (40 Gb/s downstream (DS) and 10 Gb/s upstream (US)), XG-PON (10 Gb/s DS and 2.5 Gb/s US), 10G-EPON (10.3 Gb/s DS and 1.25 Gb/s US), GPON (2.5 Gb/s DS and 1.25 Gb/s US), and EPON (1.25 Gb/s DS and 1.25 Gb/s US)[37]. The latter four are current state-of-the-art solutions.

[37] There are other possible configurations of line rate for XG-PON, 10G-EPON and GPON in the US direction. Here, a typical example is given.

Next-generation candidate XLG-PON supports the highest US and DS line rate. It, however, suffers from reach limitations posed by serious dispersion issues with a high data rate transmission. Nevertheless, paper [4] points out that dispersion can be limited by using the zero-dispersion wavelength (1.3 μm, O band) and duo-binary modulation for the transmission, and hence, special functionalities like electronic dispersion compensation (EDC) can be avoided. Nevertheless, attaining a high power budget remains a challenge for 40G-PONs, and thus they will need optical amplification (OA) and efficient forward error correction (FEC) designs.

WDM-PON: WDM-PON uses multiple wavelengths (each at 1 Gb/s) and offers the most straightforward way of capacity increase. WDM-PON is assumed to use an arrayed waveguide grating (AWG), which is a static wavelength splitter that splits incoming wavelengths to different output ports. Each user gets a separate wavelength. Since, users are on a separate wavelength, WDM-PON does not require the complexities of TDM. However, either the WDM-PON ONU must be equipped with a tunable laser (TL) to tune to a separate wavelength or it may use the DS signal wavelength to transmit on a separate US wavelength. For the second case, the ONU requires reflective semiconductor optical amplifiers (RSOA) and frequency shift keying (FSK) modulators. We consider these two variants of WDM-PON: with tunable lasers (WDM-TL) and with RSOA (WDM-RSOA).

TWDM-PON: TWDM-PON combines the flexibility of TDM-PON with the increased overall capacity of WDM technology. TWDM-PON uses stacked XG-PONs, where each XG-PON is at a different US and a DS wavelength. Here, again a power splitter is used which broadcasts all wavelengths to all users. The ONU selects a wavelength for which it requires tunable filtering. In the US direction, the ONU uses tunable transmitters. We assume four wavelengths in each direction.

PtP: In PtP, each ONU is connected directly via a fiber to the OLT, for example at a symmetrical 1 Gb/s line rate. It has the simplest ONU, but comes at the cost of a large amount of fiber that needs to be deployed.

AON: AONs use an active remote node in the field, which requires powering and maintenance. An active switch (typically Ethernet switch) in the remote node selects and forwards the relevant information for each ONU, hence the ONUs do not require TDMA functionality and tunable optics. The ONU is assumed to use a 1 Gb/s transmitter (TX) and a 1 Gb/s receiver (RX), whereas the OLT uses a 10 Gb/s TX and a 1 Gb/s RX. A high data stream from the OLT is adapted to multiple low data streams by the active switch.

A.3 Energy efficiency

The power consumption of the NGOA technologies can be reduced by utilizing sleep modes and using the split ratio for the technology such that the maximal aggregation of the traffic can be achieved. In this section, we first present the potential for the energy efficient design, and then we discuss low power modes and optimal split ratio.

A.3.1 Potential of energy efficient designs

There are large possibilities to save energy due to the following reasons:

- The traffic in the access link is bursty and follows the Pareto principle, which states that 80% of the network load is generated by 20% of the users [10]. Many users thus remain idle for most of the time, and therefore can sleep.
- Furthermore, access links are heavily under-utilized with a low average utilization of 15% [11].
- In TDM based PONs, an access link is shared by an ONU for a time fraction inversely proportional to the total number of active ONUs. For example, in a system with 16 ONUs, the access link is shared by an ONU for a time fraction of 6.25% (1/16). An ONU can thus ideally sleep for 93.75% of the time.

A.3.2 Low power sleep modes

To minimize the power consumption of ONUs, a variety of low power states have been actively considered (Figure A.2): power-shedding, doze, deep sleep, fast (cyclic) sleep and dynamic power save state [7], [8]. These approaches differ based on the parts of the ONU that are switched off [7].

Power-shedding − The power-shedding approach shuts down the unused user network interfaces (UNIs).

Dynamic power save state – In this state, along with the non-essential UNIs, the laser driver (LD) of the transmitter block is switched off.

Doze state − In doze state, non-essential functions are powered off with an additional powering off of the ONU transmitter while the receiver remains on.

Sleep state − In sleep state, non-essential functional blocks and both the ONU transmitter and the receiver are turned off.

A mode represents the combination of states according to the traffic load. For example, doze mode is referred to as the cyclic transitions between active, power-shedding and doze state, and sleep mode as the cyclic transitions between active, power-shedding, doze, or sleep state. Sleep modes can be classified

further as deep and fast (cyclic) sleep mode based on the periods of sleep, and obviously, the deep sleep approach has comparatively longer periods of sleep.

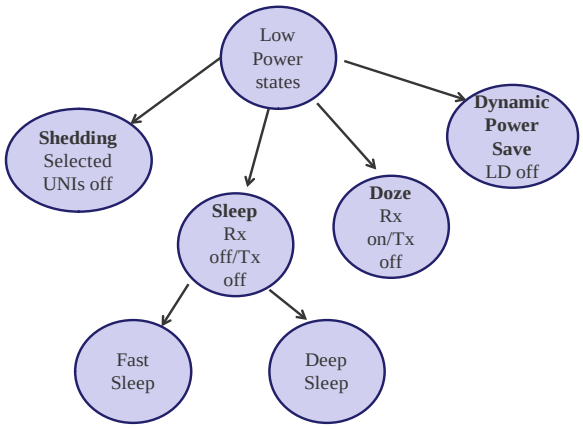

Figure A.2: Low power modes

A.3.3 Optimal split ratio

Different technologies have a different DS and US capacity, and thus they should be compared with a different split ratio. The split ratio is restricted by the available power budget. The higher the power budget, the higher the split ratio of the technology can be. Moreover, the split ratio should be chosen such that the desired quality of service (QoS) can be assured to the users. Normally, the same average bandwidth per customer is assumed to select the split ratio. However, this does not take into account the advantages that can be accrued due to the statistical multiplexing of demands from a large number of users. For example, a system with a higher fan out will be able to deliver a better QoS performance compared to a system with a lower fan out even with the same average bandwidth per customer. Thus, choosing an optimal split ratio requires modeling the architecture performance with an appropriate traffic matrix. Paper [9] provides insight into deriving such optimal split ratios for various technologies.

A.4 Evaluation approach

In this section, we first outline the evaluation methodology to calculate the optimal split ratio and then discuss the assumptions for the calculation of power consumption of various components in active and sleep states.

A.4.1 Calculation of the optimal split ratio

The optimal split ratio is calculated for each technology such that the QoS

requirements are fulfilled. For this, first we define a target bandwidth, referred as B_{target}, which is the bandwidth requested by an active user. Further, we vary the probability P_{act} for which a user is active. Based on B_{target} and P_{act}, we can vary the bandwidth requests in the scenario. For the evaluation in this paper, we define two scenarios:

- Low demand scenario: B_{target} = 100 Mb/s, P_{act} = 10%.
- High demand scenario: B_{target} = 1 Gb/s, P_{act} = 50%.

For each technology, we select the splitting ratio such that the target bandwidth is provided with an availability probability P_{av}. P_{av} is fixed at 20%. The details of this calculation can be found in [9]. The optimal split ratio calculated for each technology is given in Table A.A.

A.4.2 Assumptions of the power consumption of the components

In this paper, we take into account the power consumption[38] due to transceivers and digital processing at the OLT and the ONU. For the OLT, the power consumption due to uplink interfaces, layer 2 processing, and aggregation networks are not included. The bit-interleaving gains [10], which may further benefit TDM-PONs, are also not included. Similarly, for ONUs, the power consumption due to user network interfaces (UNIs), RF overlay, and memory[39] is the same for all technologies and is thus excluded. For details about the total power consumption of an ONU, we encourage the readers to refer to [1].

The assumptions of the power consumption of the transceivers depend upon many factors. To explain this, we first show the components of a transceiver (Figure A.3). A transceiver includes a TX and a RX, and sometimes an integrated semiconductor optical amplifier (SOA) based booster or a pre-amplifier. The TX includes a laser and a laser driver (LD), and the RX consists of a photo-diode (PD), a trans-impedance amplifier (TIA), a limiting amplifier (LA) and a clock and data recovery (CDR) circuit. Moreover, other components like a thermal-electric cooler (TEC) and a tunable filter (TF) may also be used depending upon an NGOA technology. Different technologies influence the design of a transceiver and its sub-components in the following ways:

High data rate: The power consumption of most components is sensitive to the data rates. For example, the power consumption of TIA and LA varies as 3 mW and 2 mW per Gb/s respectively [11]. More significantly, the transceiver with a high data rate may require altogether a different design which can be more power consuming. For example, an externally modulated laser (EML) consumes

[38] Power consumption also includes power conversion inefficiency.

[39] For each technology, the memory requirements and thus its associated power consumption may vary. However, its effect is negligible and is thus ignored.

more power than a directly modulated laser (DML) and is used for high data rate transmission (e.g., 10 Gb/s). Thus, XLG-PON (for both OLT and ONU), XG-PON (for OLT) and TWDM-PON (for OLT) use EML whereas other technologies use DML.

High insertion loss: To combat high insertion loss, the technologies use an avalanche photodiode (APD) instead of a positive-intrinsic-negative (PIN) photodiode in the receivers to increase the available power budget. Moreover, SOA based boosters and pre-amplifiers can be used to further increase the power budget. In this paper, we assume that XLG-PON uses an SOA based booster to alleviate the high insertion loss due to its high data rate.

Multiple wavelength systems: The technologies using multiple wavelengths, such as WDM- and TWDM-PON, require a high-wavelength precision in the DS direction and thus need temperature control, which requires a power-hungry TEC. In the US direction, they need an uncooled tunable laser40. Moreover, if multiple wavelengths are fed to a receiver, it will additionally need a tunable filter.

TDM based PONs: TDM based PONs, e.g., TDM-PONs and TWDM-PON, the ONU TX has to be optimized for a fast turn on/off and thus needs a burst mode laser driver (BM-LD).

Logical Point-to-Multi-Point (L-PtMP) technologies: In L-PtMP technologies, like TDM-PONs and TWDM-PONs, the OLT RX receives a signal from ONUs with varying distances, and thus it needs a burst mode LA (BM-LA) to adjust to the dynamic range of the received signal power. Note that, however, in AON due to an optical-electrical-optical (OEO) conversion at the intermediate active remote node, BM-LA is not required.

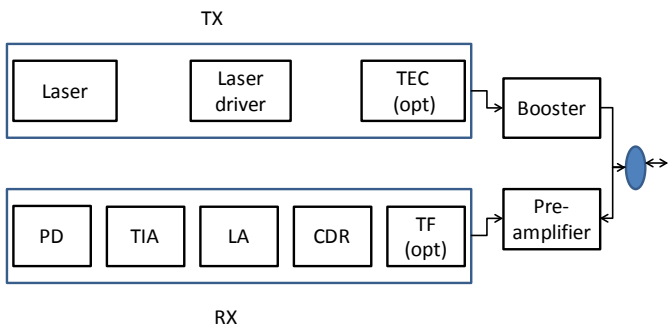

Figure A.3: Sub-systems of a transceiver

[40] Paper [12] achieves tuning by only heating the wavelengths. However, such advanced solutions are not considered.

Sleep mode requirements: To support sleep mode, the ONU RX should be equipped with a burst mode CDR (BM-CDR) to resynchronize to the OLT data within negligible (few nano-seconds) time.

The details of the transceiver's design are given in Table A.B. Based on this design, power consumption values are calculated for the transceivers of the OLT (Table A.A) and the ONUs (Table A.C) of different NGOA technologies. The sub-components values are taken from [9], [11] and a large survey of component's data sheets. The power consumption of an active remote node in AON is assumed as 4 W.

A.4.3 ONU's power consumption in sleep modes

The ONU's power consumption is given in active, cyclic sleep and deep sleep states in Table A.C. The actual ONU power consumption depends upon the time that an ONU spends in active, cyclic sleep and deep sleep state. For making optimal transitions between these various states, we use the medium access control (MAC) protocol proposed in [1].

Note that since the power consumption of UNIs is ignored, power-shedding state is irrelevant. Moreover, for NGOA technologies, doze state does not make sense as NGOA systems can always be assumed to be equipped with a BM-CDR, which makes the penalties associated with switching off a receiver negligible. Whenever a receiver is turned on, it needs to resynchronize to the OLT data. However, by using a BM-CDR [14], which uses a local oscillator to keep the ONU in accord with the OLT, the recovery time reduces to as short as 10 ns for the 1 Gb/s receiver, and is even shorter for 10 Gb/s as the higher bit rate CDRs scan more bits in the same time. Thus, the resynchronization time of the receivers can be neglected.

For cyclic sleep, we assume a scheduling cycle of 20 ms, whereas for deep sleep, we assume a scheduling cycle of 100 ms. The assumptions of transceiver's sleep overheads are from [1] and are given in Table A.C. The sleep overheads are due to the finite time taken by the transmitter to wake up and sleep. For TDM based technologies, the transmitter is a burst mode transmitter and hence takes negligible time to wake up and sleep. However, technologies like PtP, WDM-PON and AON use a continuous mode transmitter and hence they experience longer overhead times. In cyclic sleep, the power consumption of the digital circuits is assumed to be reduced by 60% using clock gating. The time taken in clock gating the digital circuits is assumed as 5 μs. The overall sleep overhead in cyclic sleep is the maximum of the overhead penalty due to the transceivers and clock gating.

In deep sleep, the digital circuits are completely switched off. This saves more power but also increases the wake up overheads. The wake up time to completely power off digital circuits is assumed as 10 ms. This means in deep sleep, the

overall overhead is dominated by the time to power off/on digital circuits and is the same for all technologies.

Table A.A: Maximum power budget, OLT power consumption and split ratios per transceiver of various NGOA technologies

Technology	Maximum Power Budget (dB)	Transceiver power consumption (W)	Digital Processing power consumption (W)	Total power consumption per transceiver (W)	Split ratio (in low demand scenario)	Split ratio (in high demand scenario)
GPON (B+)	28	1.8	2.0	3.8	64	8
XGPON	35	5.0	7.0	12	256	32
XLG-PON (including SOA)	28	16	25	41	128	128
WDM-PON (Tunable Lasers)	38	1.9	1.2	3.1	1	1
WDM-PON (RSOA)	25	1.9	1.2	3.1	1	1
TWDM-PON	38.5	6	7	13	64	32
Ethernet PtP	31	1.0	1.2	2.2	1	1
AON	35	4.0	7.0	11	256	128

Table A.B: NGOA technologies and key required functionality

System	ONU		OLT	
	Rx	Tx	Rx	Tx
GPON	2.5 G-PIN+TIA+LA+BM-CDR	1.25 G-DML+BM-LD	1.25 G-PIN+TIA+BM-LA+CDR	2.5 G-DML+LD
XG-PON	10 G-APD+TIA+LA+BM-CDR	2.5 G-DML+BM-LD,	2.5 G-APD+TIA+BM-LA+CDR	10 G-EML+LD
XLG-PON	40 G-APD+TIA+LA+BM-CDR	10 G-EML+BM-LD	10 G-APD+TIA+BM-LA+CDR	40 G-EML+LD+SOA
WDM-TL	1 G-PIN+TIA+LA+BM-CDR	1 G-uncooled TL+LD,	1 G-PIN+TIA+LA+CDR	1 G-DML+LD+TEC
WDM-RSOA	1 G-PIN+TIA+LA+BM-CDR	RSOA+FSK modulators	1 G-PIN+TIA+LA+CDR	1 G-DML+LD+TEC
TWDM	10 G-APD+TIA+LA+BM-CDR+TF	2.5 G-uncooled TL+ BM-LD,	2.5 G-APD+TIA+BM-LA+CDR	10 G-EML+LD+TEC
PtP	1 G-PIN+TIA+LA+BM-CDR	1 G-DML+LD	1 G-PIN+TIA+LA+CDR	1 G- DML+LD
AON	1 G-PIN+TIA+LA+BM-CDR	1 G-DML+LD	10 G-PIN+TIA+LA+CDR	10 G- EML+LD

Table A.C: ONU's power consumption (W) in various states in different NGOA technologies

Techno-logy	Power Consumption					Sleep overheads		
	Transceiver	Digital	Active state	Cyclic sleep	Deep sleep	Transceiver	Overall Cyclic sleep	Overall Deep sleep
GPON (B+)	1.2	2	3.2	0.6	0.1	100 ns	5 µs	10 ms
XGPON	1.6	4	5.6	1.2	0.1	200 ns	5 µs	10 ms
XLG-PON	2.6	5	7.6	1.5	0.1	500 ns	5 µs	10 ms
WDM-PON (Tunable Lasers)	1.9	1.5	3.4	0.45	0.1	1 ms	1 ms	10 ms
WDM-PON (RSOA)	1.7	1.5	3.2	0.45	0.1	1 ms	1 ms	10 ms
TWDM-PON	2.3	4	6.3	1.2	0.1	200 ns	5 µs	10 ms
Ethernet PtP	1	1.5	2.5	0.45	0.1	1 ms	1 ms	10 ms
AON	1	1.5	2.5	0.45	0.1	1 ms	1 ms	10 ms

The power consumption in deep sleep is essentially to maintain an internal timer to wake up the ONU at its expiry or to respond to local stimuli like the off-hook condition, and is thus the same for all technologies.

A.5 Results

We evaluated the power consumption of GPON (B+), XGPON, Ethernet PtP, WDM-PON with tunable lasers, WDM-PON with RSOA, TWDM-PON, XLG-PON and AON. As already pointed out, we did this evaluation for two scenarios: low demand and high demand.

Figure A.4a and b shows the power consumption of various technologies in the low demand scenario with and without sleep modes at the ONUs. When sleep modes are not considered, we clearly see that the ONU influences maximally the power consumption of the technologies. XLG-PON is found to consume maximum power and this is due to a large ONU's power consumption because of a high data rate transceiver and OA. However, there is a large effect of sleep mode on the power consumption of the technologies: XLG-PON, which consumes the largest power without sleep mode, consumes very little (less than 0.5W) power with sleep mode. In sleep mode, the components can be switched off for a long time and thus large savings are possible. Moreover, it benefits the technologies with a more bursty transmission as they have a longer switch-off time. In addition, with sleep modes, OLT's power consumption becomes dominant, and logical PtP (L-PtP) technologies, like Ethernet PtP and WDM-

PON, perform worse due to a low sharing of the OLT components.

Figure A.4c and d gives the power consumption of various technologies in the high demand scenario with and without sleep modes at the ONUs. Here, the effect of sleep modes is similar to the scenario with low demand. However, the power consumption of the L-PtMP technologies increases due to the reduced splitting ratio and thus lowered sharing.

A.6 Conclusions

In this paper, we compared the power consumption of various next generation optical access (NGOA) technologies like GPON, XGPON, Ethernet PtP, WDM-PON with tunable lasers, WDM-PON with RSOA, TWDM-PON, XLG-PON and AON. The power consumption for these technologies is derived using their optimal split ratio, and taking into account the effects of sleep mode. The analysis is done for two scenarios: with low demand and high demand. From this analysis, we found that technologies with a more bursty transmission like TWDM-PON and XLG-PON benefit more with sleep modes. When sleep modes are taken into account, the OLT's power consumption becomes a dominant factor in determining overall power consumption of the technologies, and the L-PtMP technologies become a clear winner over the L-PtP technologies, thanks to the sharing of OLT's transceivers and other digital processing components. For future work, power consumption of other NGOA technologies like coherent WDM-PON and OFDM-PON can be evaluated.

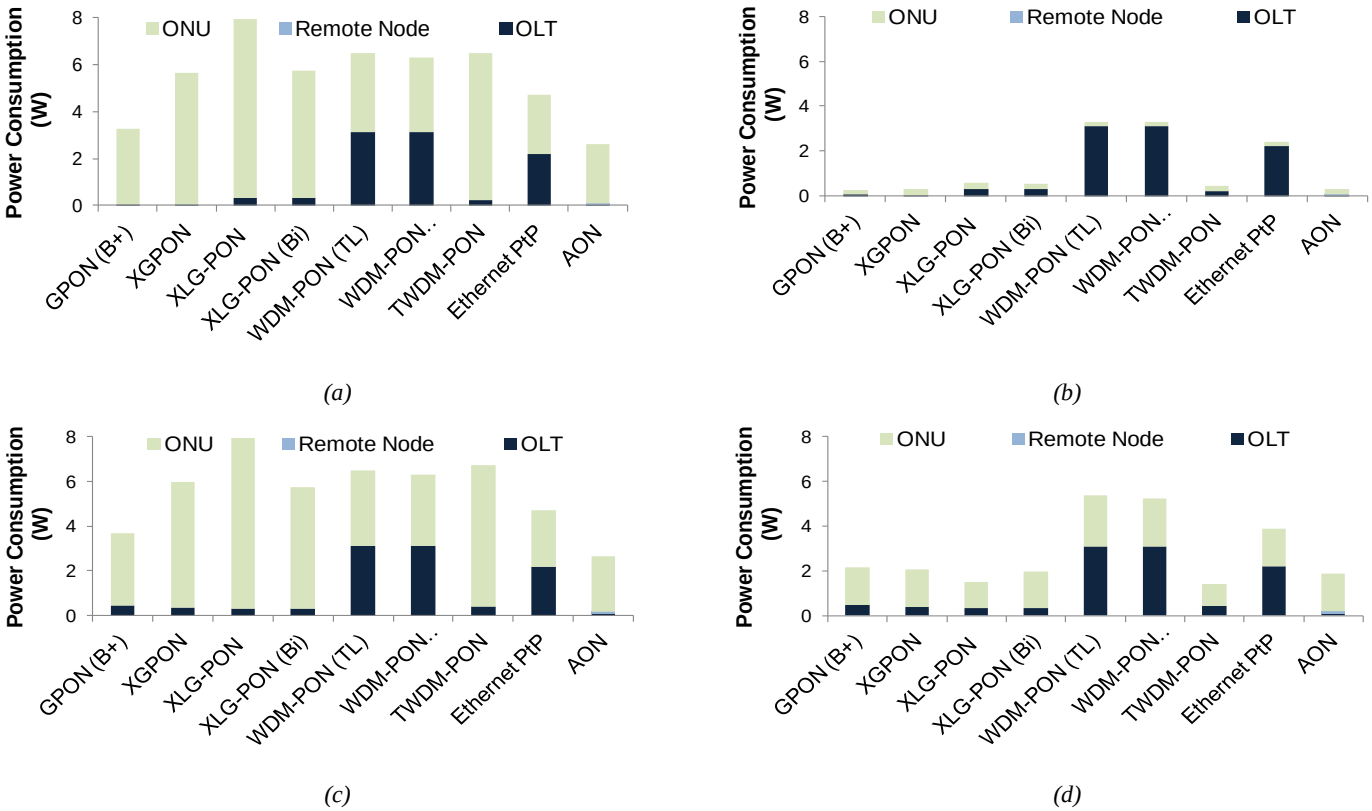

Figure A.4: Power consumption of various NGOA technologies in low and high demand scenarios

References

[1] A. Dixit, B. Lannoo, D. Colle, M. Pickavet, and P. Demeester, "ONU power saving modes in next generation optical access networks: progress, efficiency and challenges," *Optics Express*, vol. 20, no. 26, pp. B52-B63, 2012.

[2] A. Dixit, B. Lannoo, G. Das, D. Colle, M. Pickavet, and P. Demeester, "Flexible TDMA/WDMA passive optical network: energy efficient next-generation optical access solution," *Optical Switching and Networking*, vol. 10, no. 4, pp. 491-506, 2013.

[3] IEEE 802.3av, "Power Saving Adhoc Report," 2008.

[4] E. Harstead, D. Van Veen, and P. Vetter, "Technologies for NGPON2: why I think 40 G TDM PON (XLG-PON) is the clear winner," in *Optical Fiber Communication (OFC)*, 2012.

[5] R. Sanders, "The Pareto principle: Its use and abuse," *Journal of Product & Brand Management*, vol. 1, no. 2, pp. 37-40, 1992.

[6] L. Shi, B. Mukherjee, and S. S. Lee, "Efficient PON with sleep-mode ONU: progress, challenges, and solutions," *IEEE Network Magazine*, vol. 26, no. 2, pp. 36-41, 2012.

[7] ITU-T Rec. G.Sup45, GPON Power Conservation, 2009.

[8] E. Igawa, M. Nogami, and J. Nakagawa, "Symmetric 10G-EPON ONU burst-mode transceiver employing dynamic power save control circuit," in *Optical Fiber Communication (OFC)*, 2011.

[9] S. Lambert, J. Montalvo, J. A. Torrijos, B. Lannoo, D. Colle, and M. Pickavet, "Energy efficiency analysis of next-generation passive optical network (NG-PON) technologies in a major city network," in *IEEE International Conference of Transparent Optical Network (ICTON)*, 2013.

[10] P. Vetter, T. Ayhan, K. Kanonakis, B. Lannoo, K. L. Lee, L. Lefèvre, C. Monney, F. Saliou, and X. Yin, "Towards energy efficient wireline networks, an update from GreenTouch," in *OptoElectronics and Communications Conference (OECC)*, 2013.

[11] K-L. Lee, B. Sedighi, R. S. Tucker, H. K. Chow, and P. Vetter, "Energy efficiency of optical transceivers in fiber access networks [Invited]," *Journal of Optical Communications and Networking*, vol. 4, no. 9, pp. A59-A68, 2012.

[12] W. Pohlmann, B. Deppisch, P. Bernasconi, and T. Pfeiffer, "Performance of wavelength-set division multiplexing PON-upstream in

the O-band with optical preamplification," in *European Conference on Optical Communications (ECOC)*, 2012.

[13] S. Wong, L. Valcarenghi, Y. Hwa, D.R. Campelo, S. Yamashita, and L. Kazovsky, "Sleep mode for energy saving PONs: advantages and drawbacks," in *IEEE Global Telecommunications Conference (Globecom)*, 2009.

B

Novel DBA Algorithm for Energy Efficiency in TWDM-PONs

An expert is a person who has made all the mistakes that can be made in a very narrow field.

−NIELS BOHR

In this appendix, we propose a novel algorithm to save energy at the OLT of TWDM-PON by limiting the number of transceiver used as a function of the load. We further combine this with a sleep mode aware (SMA) algorithm, which enables low power modes at the ONUs, to explore holistic gains.

Abhishek Dixit, Bart Lannoo, Didier Colle, Mario Pickavet, and Piet Demeester.

Published in Proceedings of European Conference on Optical Communication (ECOC), Amsterdam, 2013.

Abstract— Time and wavelength division multiplexed passive optical networks (TWDM-PONs) have been widely accepted as a next generation optical access (NGOA) solution. We propose a novel dynamic bandwidth allocation (DBA) algorithm for energy efficiency in TWDM-PONs.

B.1 Introduction

Next generation optical access (NGOA) networks are required to replace aging access networks to provide higher data rates to users. An important candidate that has been widely envisioned as an NGOA solution is time and wavelength division multiplexed passive optical network (TWDM-PON). TWDM-PON provides a higher data rate and has potential to save significant amount of energy, emphatically important with current access networks (including customer's premises equipment) consuming about 80 % of the energy consumed in the Internet. In this paper, we focus on the data link approaches to save energy in TWDM-PONs: both in the optical line terminal (OLT) and optical network units (ONUs).

B.2 TWDM-PON

In 2011, full service access network (FSAN) has initiated an effort to investigate NGOA architectures, and adopted TWDM-PON as the future NGOA architecture1. TWDM-PON stacks four XG-PONs using WDM, and increases upstream and downstream capacity (Figure B.1).

B.3 Energy saving algorithms

TWDM-PON opens up interesting vistas to save energy, both at OLTs and ONUs. The wavelengths at the OLT can be used at high utilization by turning off idle ones, and ONUs can exploit sleep modes [2] due to a bursty and slotted transmission in TDM. Nevertheless, it requires a dynamic bandwidth allocation (DBA) algorithm to minimize the performance degradation due to possible enlarged delays. To minimize the complexity of scheduling, we use a disjoint upstream and downstream scheduling algorithm. We proposed the sleep mode aware [2] (SMA) algorithm to exploit sleep modes, particularly for EPON or for static TWDM-PONs (where a group of ONUs specifically uses a wavelength pair for upstream and downstream, and this cannot be rearranged, for example with a changing traffic demand). In this paper, we propose the hybrid SMA (HSMA) algorithm, which extends the concept of SMA in flexible TWDM-PONs.

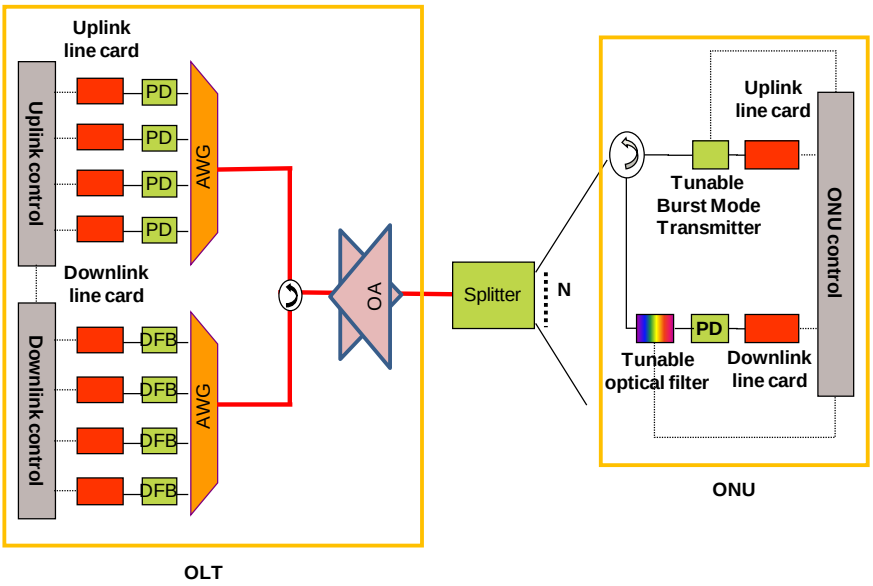

Figure B.1: Architecture of a stacked TWDM-PON. Abbreviations used in the figure: DFB=distributed feedback laser, PD =photodiodes, AWG = arrayed waveguide grating, OA = Optical amplifiers

B.3.1 Hybrid sleep awareness algorithm

HSMA adopts two phase scheduling: wavelength minimization and assignment (WMA) and time slot assignment (TSA). WMA tackles the variability in traffic over a period, whereas TSA distributes bandwidth among ONUs on a per cycle basis.

B.3.1.1 WMA

In WMA, the number of wavelengths and the users on a wavelength are determined after a fixed time T. T can be fixed based on the choice of an operator and the variability in the traffic use: if T is large (12 hours), then WMA is on a day-night basis, and a small T (2 ms) tackles a more rapid variation in traffic. Note that a smaller T follows traffic more precisely and will harness better energy efficiency gains. Conversely, it induces penalties of large tuning times (TTs) that an ONU suffers because of hopping on to a different wavelength. Thus, it is important to ensure the fair selection of the ONUs that will hop on during a next frame (or WMA).

We use the number of wavelengths (N_w) according to the load as

$N_w = \left\lceil \sum_{i=1}^{N} B_i \Big/ T.\lambda_d \right\rceil$,where B_i is the sum of requested data (in bits) of ONU i over a period of T, N is the number of ONUs and λ_d is the data rate (bits/second) of each wavelength. After deciding the number of wavelengths, another challenge is the ONUs' assignment on wavelengths that maintains evenly loaded wavelengths, while being fair to the ONUs. The ONUs are assigned on the wavelengths in a round robin manner. In a time frame *n*, the round is initiated by the ONU with id *n* modulo *N* (Figure B.2*)*. This is done to ensure uniform distribution of wavelength switching (or tuning times) among ONUs. An ONU is assigned to a wavelength if the normalized load of the ONU is lighter than twice the remaining capacity (where the remaining capacity is the difference between the normalized $\sum_{i=1}^{N} B_i \Big/ T.\lambda_d.N_w$ and the already assigned capacity) on the wavelength; otherwise it is deferred to the subsequent wavelength. After assignment of ONUs on a wavelength, the normalized load of other (remaining) wavelengths is updated according to the under- or over-utilization of the wavelength.

Figure B.2 shows that in a frame *n*, four wavelengths are used, and the round starts with ONU 1. In the next frame, due to a lighter load, one wavelength is switched off, and the ONU assignment starts with ONU 2. Note that using a minimal number of wavelengths still satisfying the requirements of all ONUs is a bin-packing problem, which ideally requires complex heuristics (NP-hard) to optimally assign ONUs to wavelengths. In addition, the heuristics may cause some ONUs (lightly loaded) to switch more than the others causing fairness problems. Our proposed algorithm maintains simplicity and fairness; however, it may lead to heavier loaded wavelengths increasing delays (still less than the state-of-the-art earliest finish time (EFT) algorithm, Figure B.5).

B.3.1.2 TSA

Within a WMA frame, the various ONUs' groups (the ONUs on a same wavelength) are assigned TDMA cycles using the SMA with up- and downstream centric (UDC) [2] algorithm. SMA-UDC proposes to transmit the up- and downstream traffic of an ONU at the same time for maximal energy efficiency [2] (sleep period). This entails that the ONUs be grouped identically in the up- and downstream direction: segmenting TWDM-PON into logical TDMA PONs, where a group of ONUs uses the same up- and downstream wavelength. However, due to a different load profile, the grouping of ONUs (according to WMA methods) in up- and downstream direction may be different. As a result, whichever grouping (based on down- or upstream) induces a lighter peak-normalized load on a wavelength is chosen for both the directions. Note that a contrary approach can be to select the grouping according to higher

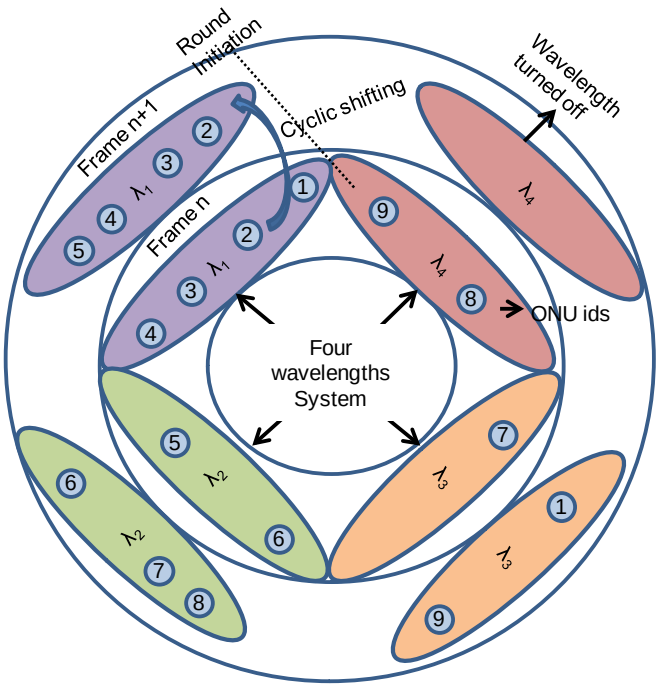

Figure B.2: Wavelength assignment and grouping in the proposed algorithm

wavelength utilizations: reaping higher energy efficiency at the risk of enlarging delays.

Another challenge is to adjust the multiple TDMA cycles within a WMA frame. Given the varying lengths of TDMA cycles and a fixed T (Figure B.3), this is not guaranteed per se. Unchecked TDMA cycles may cross the time epoch of the WMA frame (Figure B.3), and may lead to problems of duplicated scheduling (DuS): an ONU may get assigned to two wavelengths at the same time, one in the cycle (C) of the previous frame, and the other in the cycle of a new frame. For example, ONU 4 may be scheduled in two wavelengths at the same time (Figure B.3). To solve this problem, we introduce adjusting cycles (AdC). Whenever, the remaining scheduling length R_l of the frame becomes shorter than the maximum cycle length C_{max}, the OLT distributes R_l among all ONUs in the ratio of their requested windows (REPORTs). Should the REPORT from an ONU not arrive at the time of the start of an AdC, the previous requested window is adopted (exploiting the fact that traffic is bursty and traffic requests from an ONU repeat for some cycles). In addition, in the AdC, the ONUs are informed of their next wavelengths (up- and downstream) assignment.

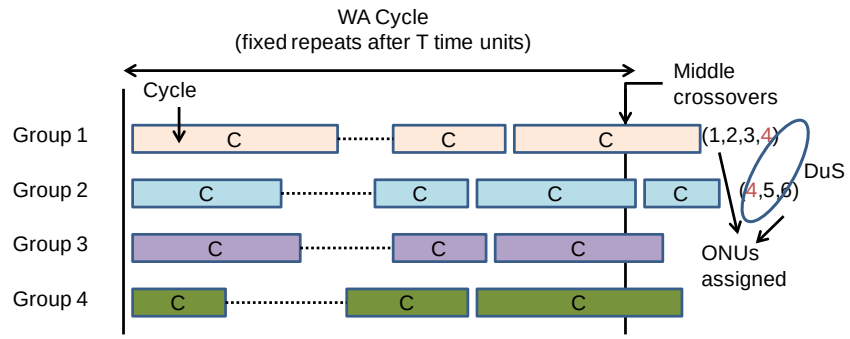

(a)

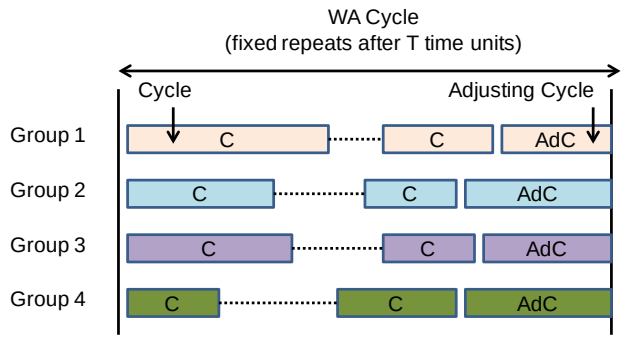

(b)

Figure B.3: The problem of middle crossovers and duplicated scheduling (DuS) in (a) and solution by introducing the concept of AdC in (b)

B.4 Advantages of the proposed schemes with conventional approaches

To the best of our knowledge, this is the first paper that combines the energy efficiency due to sleep modes at the ONUs and the energy savings due to shutting down idle transceivers at the OLTs. Moreover, it decouples the wavelength assignment from TDMA assignments and removes the complexity in scheduling, leading to a lower processing requirement. The joint time and wavelength scheduling (JTWS) has been proposed in [3]. However, JTWS approaches like EFT are only concerned with minimizing delays and lead to unlimited wavelength switching at the ONUs, leading to large delays due to TT at the ONUs; the TT can be 10 ms long.

B.5 Simulation results

In OPNET, we study the performance of HSMA by conducting a simulation of TWDM-PON with 512 ONUs, and four wavelengths in each direction. We assumed a maximum ONU load of 100 Mb/s, downstream and upstream line rate of 10 Gb/s and 2.5 Gb/s, maximum OLT to ONU distance of 20 km, maximum cycle time of 2 ms, ONU buffer of 1 MB, T as 0.1s, TT of ONUs as 1 ms, ONU power as 80% of the total (OLT+ONU) power, power in sleep mode as 15% of the active ONU power, and guard time between adjacent ONU slots as 1 µs. We generated traffic as in [2]. The upstream and downstream normalized load is considered symmetrical. In results, only upstream delay (the higher of the two) is plotted.

The energy consumption and capacity usage are shown in Figure B.4. The energy consumption is reduced to an average of 31% compared to the case when there is no saving at the OLT or the ONUs. At very light loads, the sleep mode periods are worse as cycle times are short, leading to frequent ONU wake ups.

We compare the delay performance of HSMA with EFT, with and without WM (wavelength minimization). We use all four wavelengths for “without WM” scenarios. Note that, in EFT, ONU grouping is not required, as the users are not assigned on a wavelength per WMA frame but per TDMA cycle. In addition, EFT-WM also suffers from middle crossovers and thus AdC is used for them. Delay performance is shown in Figure B.5. The delay oscillates because the normalized load oscillates due to the addition and deletion of wavelengths. For example, when the network load is 0.2, only one wavelength is used and the normalized load is 0.8. However, as soon as the load crosses 0.25, most of the times 2 wavelengths are used, leading to a normalized load of 0.5. Hence, though the network load always increases, the normalized load oscillates, leading to an oscillating delay performance. Moreover, the delay performance of HSMA without WM and with WM is improved compared to its EFT counterparts due to an excessive wavelength switching in EFT.

Lastly, the delay performance is shown with the variation in T and TT at the normalized load of 0.4 (Figure B.6). As TT increases, delay increases. However, increasing T has two different effects. First, as T increases, degradation due to TTs minimizes and secondly the network response to burstiness of traffic decreases. Due to these two counter effects, the optimal value of T is found at 0.1 s.

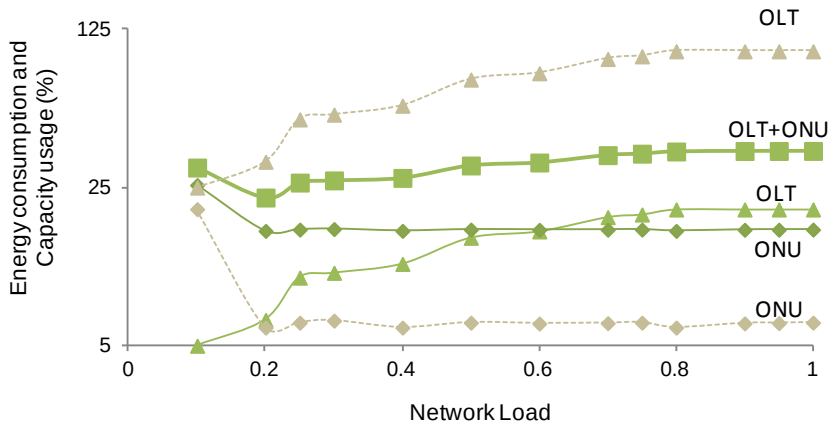

Figure B.4: Energy consumption (solid lines) and capacity usage (dashed lines) in HSMA

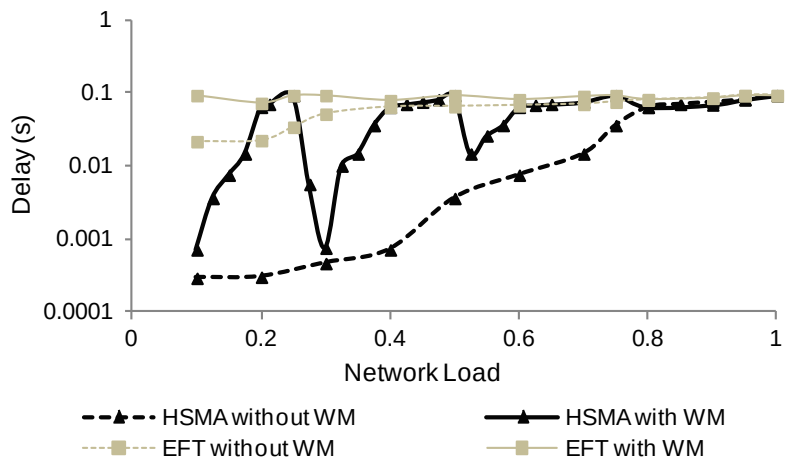

Figure B.5: Delay with and without WM in HSMA and EFT

B.6 Conclusions

We proposed the HSMA algorithm that combines the energy efficiency due to sleep modes and the load dependent use of transceivers at the OLT. Due to this, the average energy consumption is reduced to 31%. In addition, the delay is reduced in HSMA compared to conventional algorithms like EFT.

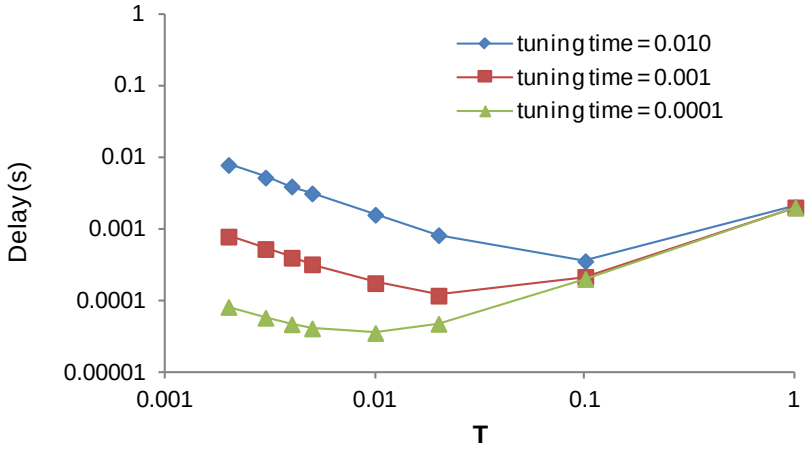

Figure B.6: Delay with a variation in TT and T

References

[1] Y. Luo, X. Zhou, F. Effenberger, X. Yan, G. Peng, Y. Qian, and Y. Ma, “Time and wavelength division multiplexed passive optical network (TWDM-PON) for next generation PON stage 2 (NG-PON2),” *IEEE/OSA Journal of Lightwave Technology*, vol. 31, no. 4, pp. 587-593, 2013.

[2] A. Dixit, B. Lannoo, D. Colle, M. Pickavet, and P. Demeester, “ONU power saving modes in next generation optical access networks: progress, efficiency and challenges,” *Optics Express*, vol. 20, no. 26, pp. B52-B63, 2012.

[3] K. Kanonakis, and I. Tomkos, "Improving the efficiency of online upstream scheduling and wavelength assignment in hybrid WDM/TDMA EPON networks," *IEEE Journal on Selected Areas in Communications*, vol. 28, no. 6, pp. 838-848, 2010.

C

Dynamic Bandwidth Allocation with Optimal Wavelength Switching in TWDM-PONs

Everybody gets so much information all day long that they lose their common sense.

–GERTRUDE STEIN

In this appendix, we analyze the performance degradation caused by excessive wavelength switching in TWDM-PONs.

Abhishek Dixit, Bart Lannoo, Didier Colle, Mario Pickavet, and Piet Demeester.

Published in Proceedings of International Conference on Transparent Optical Network (ICTON), Cartagena, 2013.

Abstract— Time and wavelength division multiplexed passive optical networks (TWDM-PONs) have been widely considered as one of the next evolutionary steps of optical access networks. A variety of algorithms exist that explore the problem of scheduling and wavelength assignment in TWDM-PONs. These algorithms, however, allow unlimited switching of wavelengths. In reality, wavelength-switching increases guard bands due to the tuning and the switching time of components, limiting channel utilization and increasing packet delays. We propose a novel dynamic bandwidth allocation (DBA) algorithm for TWDM-PON that minimizes the performance degradation due to excessive wavelength switching.

C.1 Introduction

The continuous growth of bandwidth intensive applications like high-definition internet video, file sharing and video conferencing requires a concurrent growth in bandwidth capacities, which can be achieved by bringing an optical fiber closer to an end user, leading to the fiber-to-the-home (FTTH) technology. A promising and widely adopted FTTH technology is a passive optical network (PON). The PON has a tree topology and consists of an optical line terminal (OLT) in a central office, passive splitters/combiners in a remote node (RN), and a number of optical network units (ONU) at a user side. The PON technology can be implemented in a variety of ways, and time and wavelength division multiplexed PON (TWDM-PON) has been adopted by the full service access network (FSAN) group as the primary candidate of the next generation PON solution. TWDM-PON combines the expansion in capacity deposited by WDM with the inherent resource granularity of TDM-PON. TWDM-PON requires a dynamic bandwidth allocation (DBA) algorithm that dynamically assigns wavelengths and time slots to the ONUs. These DBAs are also known as upstream scheduling and wavelength assignment (USWA) algorithms.

TWDM-PON is realized with a tunable laser in each ONU. There exist several types of tunable lasers: the slowest can switch between wavelengths in times ranging from several seconds to a few microseconds, whereas the fastest can switch in nanoseconds. Unfortunately, fast tunable lasers are very costly and energy consuming, and thus would not be available for access networks. Thus, most often the ONUs will be equipped with lasers having long tuning times (at least tens of microseconds), and the DBA algorithms must take into account the performance degradation inherent to the long tuning and switching times. This entails designing a DBA algorithm that switches wavelengths optimally in accord with the laser tuning times.

Current state-of-the-art DBA algorithms, like earliest finish last transmission time (EFT), do not take into account the tuning and the switching time of lasers

(and receivers), leading to a very high wavelength switching at the ONUs. A very high switching leads to a high switching latency, which degrades the DBA performance. From extensive simulations, we show the performance of EFT degrades with an increase in tuning times: channel utilization drops to less than 55 % and packet delay increases more than 10 ms for a tuning time of 100 µs.

In this paper, we investigate the optimal ONU switching based on the switching and the tuning time considerations, and propose the earliest finish last transmission time - optimal switching (EFT-OS) algorithm which extends the EFT algorithm to switch wavelengths optimally considering the switching and tuning time of laser. EFT-OS adapts the wavelength switching to the laser tuning times, and thus obtains high performance.

The remainder of the paper is organized as follows. Section C.2 gives the research overview. Section C.3 presents our proposed EFT-OS algorithm. Then, we discuss simulation results (section C.4) and conclusions (section C.5).

C.2 Research overview

USWA can be approached by using either separate time and wavelength scheduling (STWS) algorithms or joint time and wavelength scheduling (JTWS) algorithms [1] (Figure C.1). STWS algorithms decouple the wavelength assignment from time slot allocation and are thus less complex. JTWS algorithms are more complex but an efficient and scalable approach of USWA.

STWA algorithms present simple solutions of USWA. The wavelength assignment can either remain static or vary with the load. The static wavelength assignment, however, is not able to obtain goods of statistical multiplexing. Hence, a periodic load dependent grouping of ONUs on wavelengths has been proposed in [2] to adapt to bursty traffic. The number of wavelengths can also be changed according to the load to procure energy efficiency. Based on this approach, hybrid sleep mode aware (HSMA) algorithm is proposed to attain significant energy efficiency in TWDM-PONs [2].

In JTWS algorithms, the problem of wavelength assignment is tackled by using the first available wavelength (FAW) [3]. The channel availability is decided based on a “horizon approach” in which each channel is considered as busy until the end of the last scheduled reservation. If no channel is free, then the wavelength with the earliest finishing last transmission (EFT) is selected and the grant for the new reservation is delayed accordingly. Another variation of FAW is latest finish time (LFT). Here the selected wavelength must have the latest finish time among all channels. In horizon-based approaches, the reservation of channels can also be delayed to some extent to have a better scheduling, ultimately leading to reduced average delays [4]. The approach is called as detaining latest finish time (DLFT). The horizon-based approaches, however,

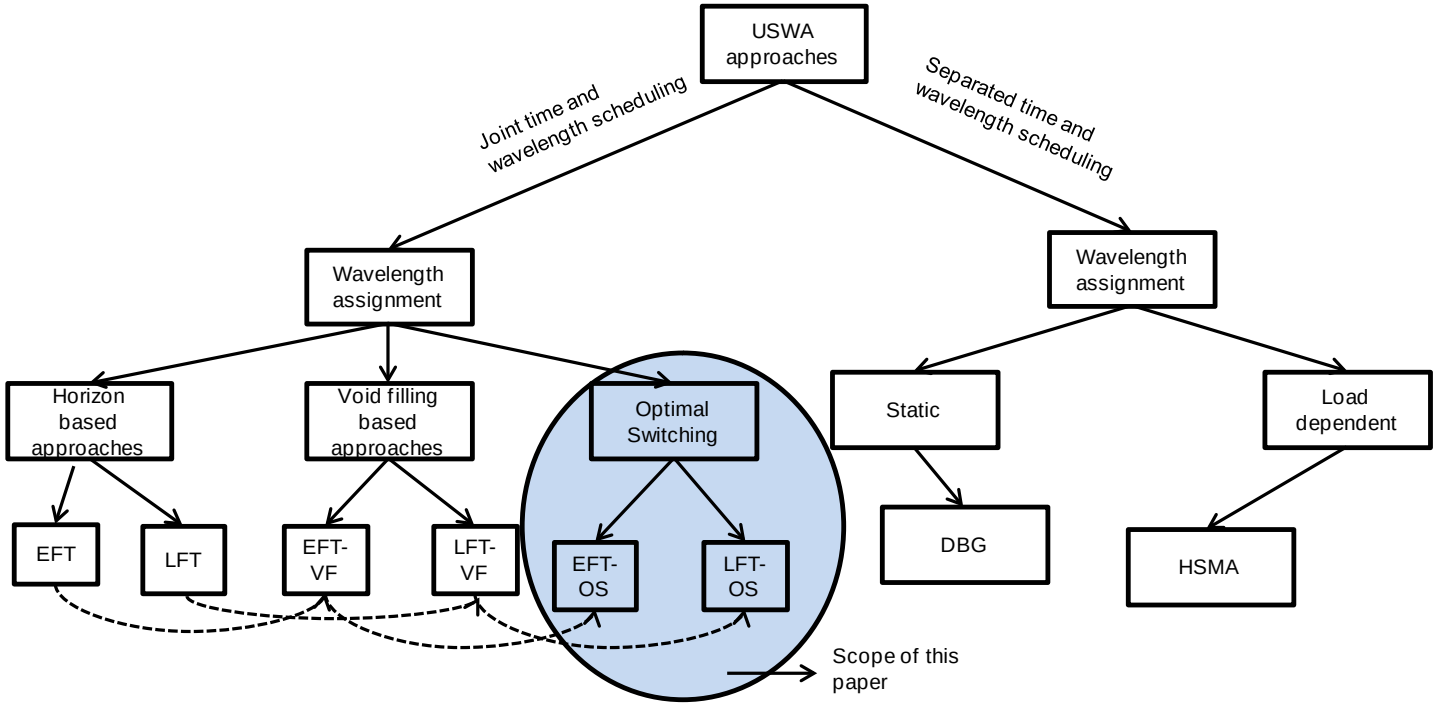

Figure C.1: DBA algorithms of TWDM-PON

create voids and reduce channel utilization.

To improve the low channel utilization of horizon-based algorithms, the void filling approach has been proposed [3]. The OLT tracks voids (unused transmission slot) in all upstream wavelengths and schedules the transmission for an ONU within the first void that is greater than the granted upstream data and the accompanying report message. Similar to horizon-based approaches, here again the transmission can be scheduled on either the earliest void or latest void, giving rise to EFT-VF or LFT-VF algorithm. The complexity of these algorithms is higher and is dependent on the number of voids. In contrary, void filling algorithms achieve a better delay performance because of exploiting better upstream scheduling opportunities. The efficiency gap is shown to become more significant with increasing split ratios and differential distances among ONUs, and thus a significant fraction of voids is further minimized by using distance-based grouping (DBG) [5]. DBG maps ONUs with similar round-trip times to the same set of upstream wavelengths, minimizing the differential round-trip delays within each group, leading to significantly shorter voids, higher channel utilization and consequently lower packet delays. Note that DBG is a type of STWS algorithm as wavelength allocation is based on the distances of the ONUs rather than instantaneous network load.

Currently the JTWS algorithms, however, allow unlimited wavelength switching, as the tuning time of the ONUs is considered non-negligible. These algorithms do not achieve acceptable performance even for the tuning times in the order of microseconds. Thus, the wavelength assignment algorithm must consider wavelength switching as an important design criterion. This paper proposes such a DBA paradigm that leads to optimal wavelength switching and that can be extended over EFT/LFT or even EFT-VF/LFT-VF algorithms.

C.3 EFT-OS algorithm

In this section, we explain the basic idea of EFT-OS. Note that the concept of optimal wavelength switching can be extended over other paradigms like LFT/EFT-VF/LFT-VF; however, we demonstrate it with EFT.

When the OLT receives a request from an ONU, there are two possibilities:

In the first case, the current wavelength (the one on which the ONU is currently tuned) has the earliest finishing last transmission time and thus there is no need to switch (Figure C.2a).

In the second case, any other wavelength (other than the one on which the ONU is currently tuned) has the earliest finishing last transmission time (Figure C.2b), and thus the OLT needs to decide whether it should switch the ONU or keep it on the same wavelength. This differentiates EFT-OS from EFT, as EFT always switches the ONU to the wavelength with the earliest finishing last

transmission time.

The OLT decides to switch an ONU based on the tuning time overheads and the gain in switching. To explain it better, we introduce some symbols and notation. Let us assume that an ONU needs a tuning time of T_T whenever switching to another wavelength, and the time gain in moving to another wavelength is T_G (Figure C.2). First, for any possible gain, $T_G > T_T$. Secondly, since the tuning time is an overhead, it reduces the channel utilization, and thus the wavelength switching should be limited. Moreover, the penalty of overheads is more severe at a heavy load, and thus the wavelength switching should be avoided more at a heavy load than at a light load.

We discuss these issues more concretely by analytical formulations. Cycle length L_c is composed of two components: a time T_u for data transmission, and a time T_o for overheads. Overheads T_o comprise of guard bands (including control message overhead), slot underutilization and voids. Following equation can be formulated:

$$L_c = T_u + T_o = \frac{\lambda L_c}{\mu} + T_o$$

where λ is the network traffic arrival rate, and μ is the upstream data rate. To simplify notations, Λ denotes the normalized load λ/μ on a wavelength. Using these equations, L_c is computed as:

$$L_c = \frac{T_o}{1-\Lambda}$$

Due to wavelength switching and an additional overhead due to tuning times (T_t), T_o will be changed to $T_o + T_t$, and modified cycle time L_{cn} as:

$$L_{cn} = \frac{T_o + T_t}{1-\Lambda} = L_c(1+\frac{T_t}{T_o})$$

Cycle length is restricted to L_{max} (for QoS considerations) and thus $Max(T_t)$ is given as :

$$Max(T_t) = T_o.\frac{L_{\max} - L_c}{L_c} \qquad (1)$$

Equation (1) restricts the number of switching in a cycle to:

$$N_{sc} \le T_o.N_\lambda.\frac{L_{\max} - L_c}{L_c.T_T}$$

where N_λ is the number of wavelengths. Thus, an ONU is allowed to switch if its non-transition time (i.e. the time for which it remains on the same wavelength) is greater than $No.L_c / N_{SC}$, where N_O is the number of active ONUs. For example, if L_{max} = 2 ms, L_c is 200 µs, T_T is 50 µs, N_λ as 4, T_o as 16 µs, N_O as 64, non-transition time of an ONU should be greater than 1.1 ms. Note that this is a fairly long non-transition time, and it proves that wavelength switching is detrimental to the delay performance unless the tuning times are fairly short (couples of micro-seconds).

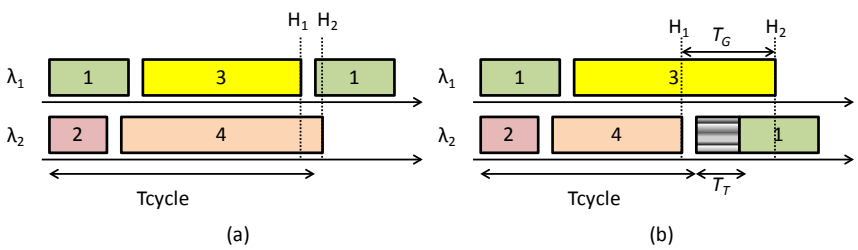

Figure C.2: Conditions encountered in EFT

C.4 Simulation results

In OPNET, we conducted a simulation of TWDM-PON with 64 ONUs and a reach of 25 km. We use 4 upstream wavelengths of 1 Gbit/s each and a guard band between ONUs' transmission slots of 1 µs. The ONUs generate self-similar traffic with a Hurst parameter of 0.8 and with a packet size varying exponentially between 64 and 1518 bytes. The granted window for an ONU is limited to a maximum of 15,500 bytes per cycle.

Figure C.3 shows the delay in EFT and EFT-OS with a variation in the network load. Both EFT and EFT-OS exhibit comparable delay performance at a tuning time equal to zero. Nevertheless, for non-negligible values of the tuning

time, EFT–OS performs significantly better compared to EFT. Even for a tuning time of 10 µs, the delay in EFT deteriorates quite significantly, and EFT will not be able to satisfy the quality of service requirements of different traffic classes. E.g., the delay requirement of voice traffic is within 1.5 ms [6], and this cannot be met, even at a light load for tuning times in the range of 10 µs or larger.

Figure C.4 shows the maximum channel utilization in EFT and EFT-OS. EFT switches ONUs unaware of the tuning times penalties. As the tuning time increases, the channel utilization in EFT decreases largely due to the increasing penalties (overheads) associated with the longer tuning times. On the other hand, EFT-OS minimizes the switching with an increasing network load (eq. 5). Thus, EFT-OS obtains a channel utilization that is high and independent of the tuning times.

C.5 Conclusions

We proposed EFT-OS, an extension of the EFT algorithm, which adapts the frequency of wavelength switching to laser tuning times. This approach induces optimal wavelength switching, and improves the delay performance and channel utilization. While the packet delay and the channel utilization in EFT degrades with an increase in the laser tuning times, EFT-OS maintains a high delay performance (delay less than 1 ms until a load of 0.6) and a high throughput (90%) even with a long tuning time of 100 µs.

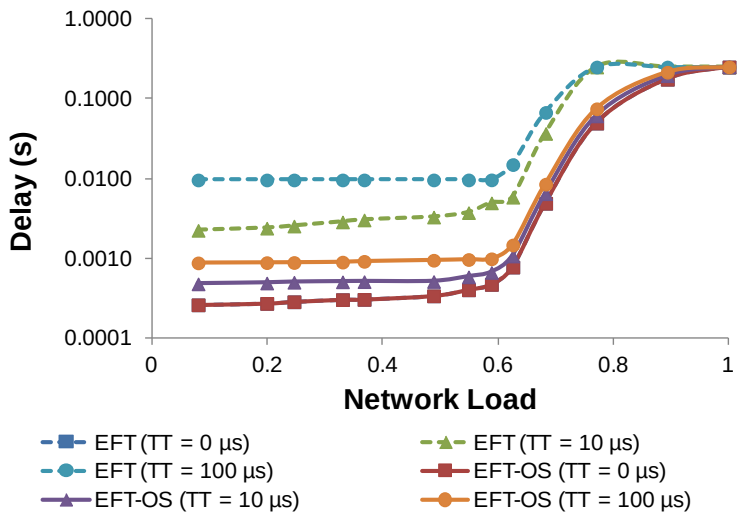

Figure C.3: Average queuing delay vs. network load for EFT and EFT-OS with different tuning times

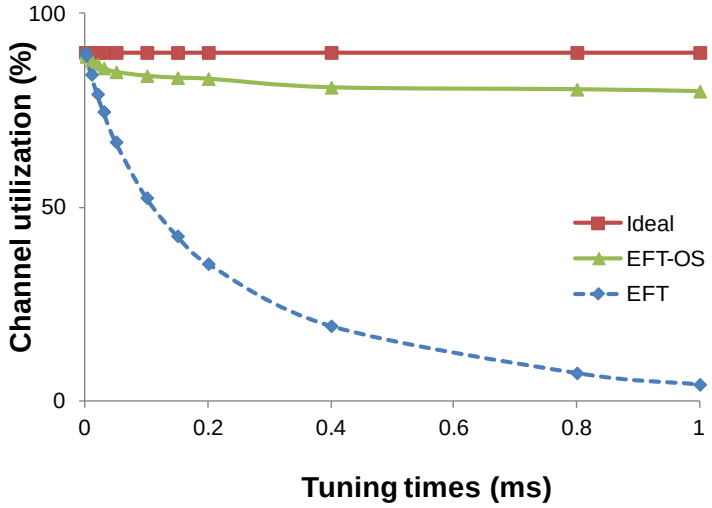

Figure C.4: Maximum channel utilization for EFT and EFT-OS with a variation in laser tuning times

References

[1] M. P. McGarry, M. Reisslein, M. Maier, and A. Keha, "Bandwidth management for WDM EPONs," *Journal of Optical Networking*, vol. 5, no. 9, pp. 637-654, 2006.

[2] A. Dixit, B. Lannoo, D. Colle, M. Pickavet, and P. Demeester, "Novel DBA algorithm for energy efficiency in TWDM-PONs," in *European Conference on Optical Communications (ECOC)*, 2013.

[3] K. Kanonakis, and I. Tomkos, "Improving the efficiency of online upstream scheduling and wavelength assignment in hybrid WDM/TDMA EPON networks," *IEEE Journal on selected areas in Communications*, vol.28, no.6, pp. 838-848, 2010.

[4] K. Kanonakis, and I. Tomkos, "Detaining online upstream scheduling in WDM/TDMA EPONs," in *European Conference on Optical Communications (ECOC)*, 2010.

[5] K. Kanonakis, and I. Tomkos, "Online upstream scheduling and wavelength assignment algorithms for WDM-EPON networks," in *European Conference on Optical Communications (ECOC)*, 2009.

[6] A. Dixit, B. Lannoo, G. Das, D. Colle, M. Pickavet, and P. Demeester, "Dynamic Bandwidth Allocation with SLA Awareness for QoS in Ethernet Passive Optical Networks," *Journal of Optical Communications and Networking*, vol. 5, no. 3, pp. 240-253, 2013.