Getting the most out of your family data with fSRM

The Social Relations Model

Lara Stas [1]
Felix Schönbrodt [2]
Tom Loeys [1]

[1]Department of Data Analysis, Ghent University, Belgium

[2]Ludwig-Maximilians-Universität München

Outline

The SRM components

Example: Case Study: X, 14 years old

- Aggressive problems in family context
- No problems at school
- Disturbed family dynamics?

Network of Relationship Inventory (Furman & Buhrmester, 1985):
- Negative interaction subscale

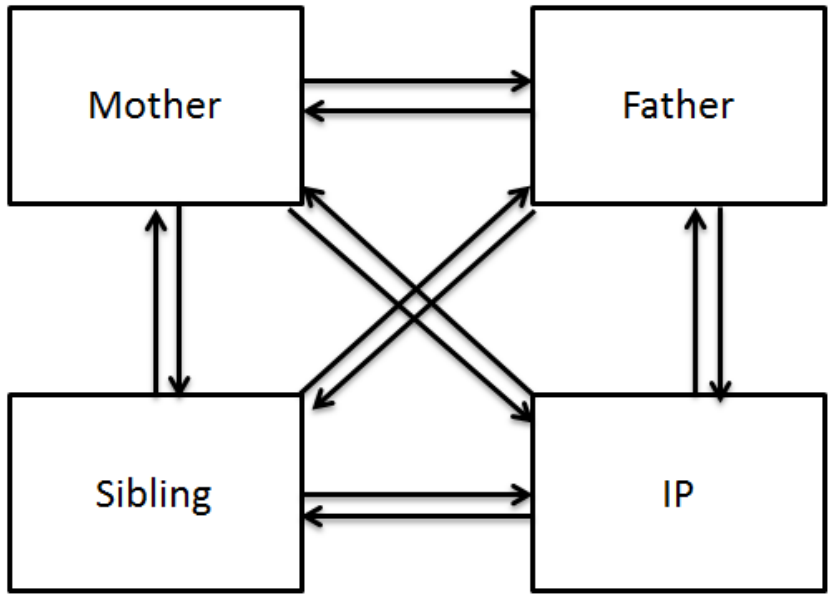

The SRM components

Example: Case Study: X, 14 years old

- Aggressive problems in family context
- No problems at school
- Disturbed family dynamics?

  e.g. *How much do you and your mother get annoyed with each other's behavior?*

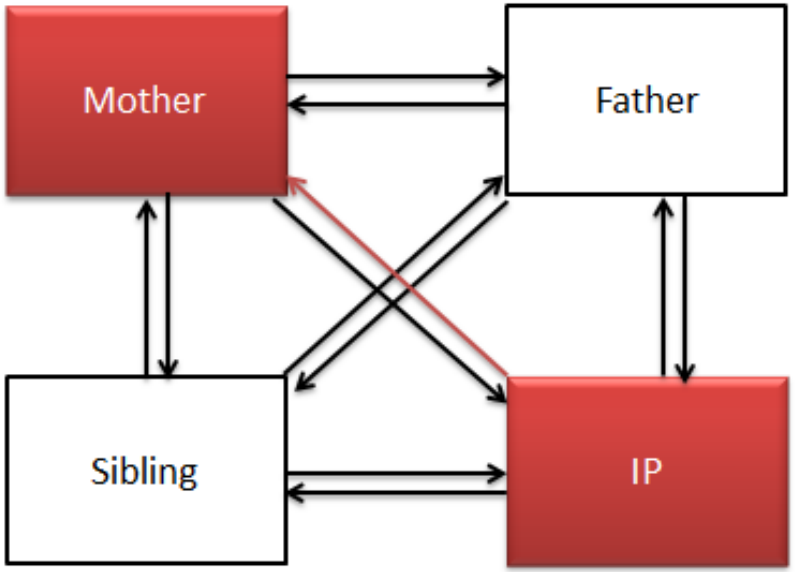

The SRM components

Example: Case Study: X, 14 years old

- Aggressive problems in family context
- No problems at school
- Disturbed family dynamics?

Result NRI :
X reports a lot of negativity in relation to his mother

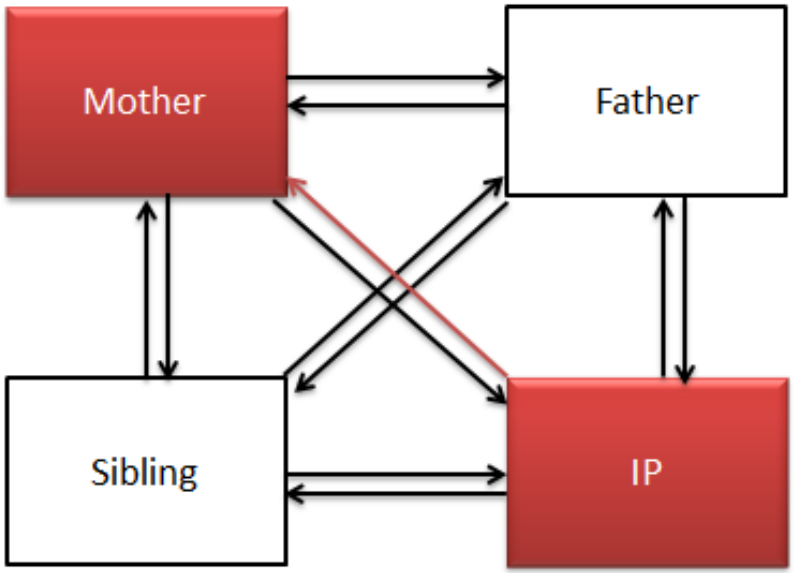

The SRM components

X reports about negativity in relation to his mother.

- Actor effect:

  How much negativity does this child report in general?

- Partner effect

  How negative is this mother perceived?

- Relationship effect

  Is it specific to their relationship?

- Family effect

  Is it something specific to the family culture?

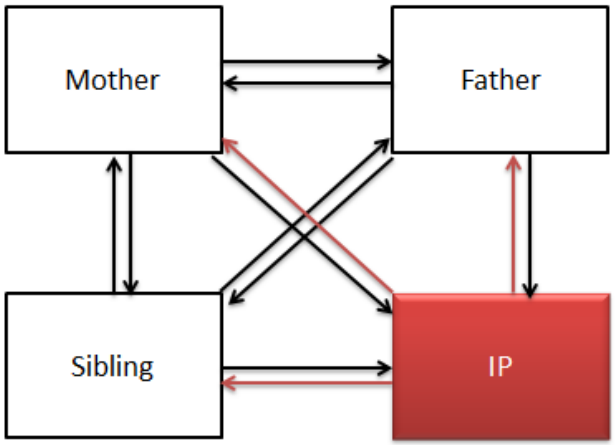

$\Rightarrow$ 21 SRM components, from three different levels

The SRM components

X reports about negativity in relation to his mother.

- Actor effect:

  How much negativity does this child report in general?

- Partner effect

  How negative is this mother perceived?

- Relationship effect

  Is it specific to their relationship?

- Family effect

  Is it something specific to the family culture?

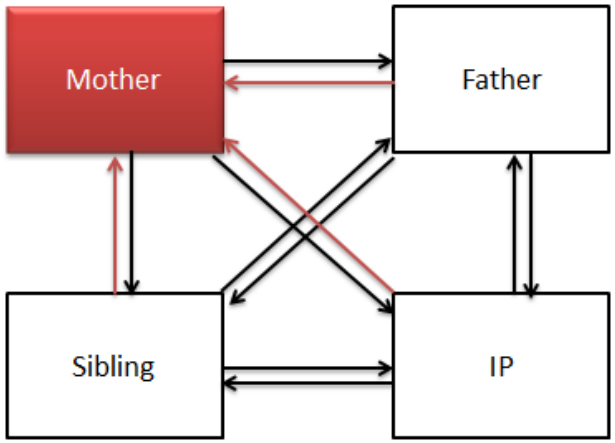

$\Rightarrow$ 21 SRM components, from three different levels

The SRM components

X reports about negativity in relation to his mother.

- Actor effect:

  How much negativity does this child report in general?

- Partner effect

  How negative is this mother perceived?

- Relationship effect

  Is it specific to their relationship?

- Family effect

  Is it something specific to the family culture?

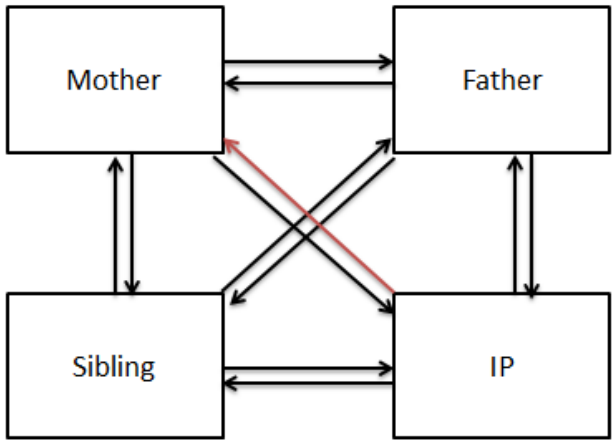

⇒ 21 SRM components, from three different levels

The SRM components

X reports about negativity in relation to his mother.

- Actor effect:

  How much negativity does this child report in general?

- Partner effect

  How negative is this mother perceived?

- Relationship effect

  Is it specific to their relationship?

- Family effect

  Is it something specific to the family culture?

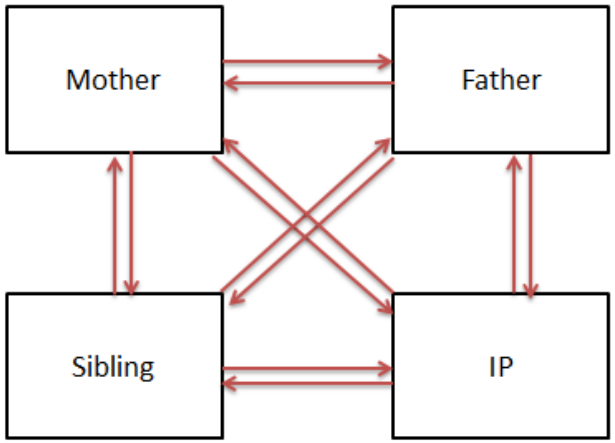

$\Rightarrow$ 21 SRM components, from three different levels

The SRM is perfectly suitable for

- Perform case studies

  ! need normative sample

  (e.g. What are abnormal dynamics within this particular family?)

- Examining one group

  (e.g. Do mothers differ in terms of negativity?)

- Comparing two groups

  (e.g. Is there a difference between mothers with or without a child with externalizing problem behavior?)

Additional analyses

Additional questions that can be answered:

- At the individual level of analyses:

  What you give is what you get?

  (i.e. correlation between actor and partner effect of the same person)

- At the dyadic level of analyses:

  Are there bidirectional effects?

  (i.e. correlation between the two relationship effects of the same dyad)

- Within generations:

  Are there intragenerational similarities?

  (i.e. correlation between actor or partner effects of the individuals of the same generation)

Confirmatory Factor Analysis

SRM components are specified as latent variables in a CFA.

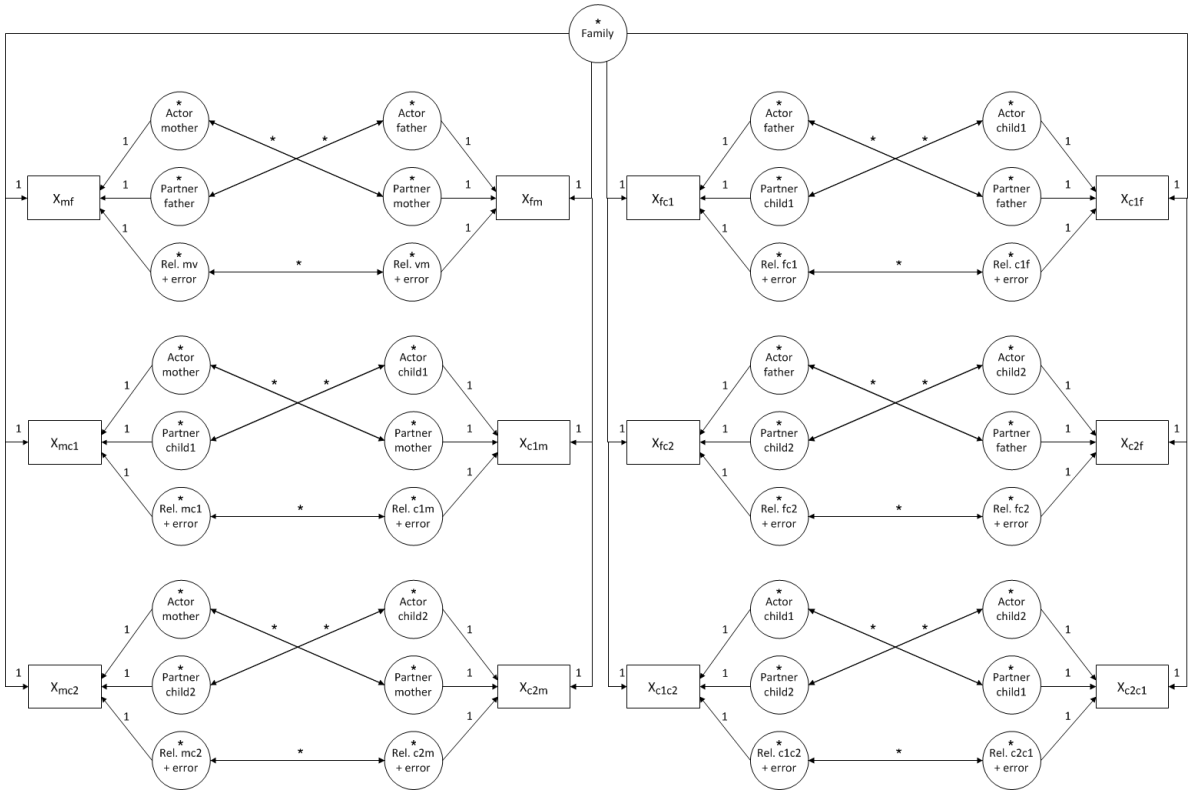

Figure : Boxes represent observed dyadic measurements, circles latent variables. Parameters that are fixed are indicated by '1', free parameters by an asterisk. Every indicator is connected with the corresponding latent variable by a single headed arrow. Double headed arrows represent reciprocities.

Main goal

Family researchers often find it hard to perform the analyses

```
# Family effect:
FE =~  1*c_f_anx + 1*c_m_anx + 1*c_y_anx +
1*f_c_anx + 1*f_m_anx + 1*f_y_anx +
1*m_c_anx + 1*m_f_anx + 1*m_y_anx +
1*y_c_anx + 1*y_f_anx + 1*y_m_anx

# Actor effects:
A.c =~ 1*c_f_anx + 1*c_m_anx + 1*c_y_anx
A.f =~ 1*f_c_anx + 1*f_m_anx + 1*f_y_anx
A.m =~ 1*m_c_anx + 1*m_f_anx + 1*m_y_anx
A.y =~ 1*y_c_anx + 1*y_f_anx + 1*y_m_anx

# Partner effects:
P.c =~ 1*f_c_anx + 1*m_c_anx + 1*y_c_anx
P.f =~ 1*c_f_anx + 1*m_f_anx + 1*y_f_anx
P.m =~ 1*c_m_anx + 1*f_m_anx + 1*y_m_anx
P.y =~ 1*c_y_anx + 1*f_y_anx + 1*m_y_anx

# Relationship effects:
R.c.f =~ 1* c_f_anx
R.c.m =~ 1* c_m_anx
R.c.y =~ 1* c_y_anx
R.f.c =~ 1* f_c_anx
R.f.m =~ 1* f_m_anx
R.f.y =~ 1* f_y_anx
R.m.c =~ 1* m_c_anx
R.m.f =~ 1* m_f_anx
R.m.y =~ 1* m_y_anx
R.y.c =~ 1* y_c_anx
R.y.f =~ 1* y_f_anx
R.y.m =~ 1* y_m_anx

# Generalized reciprocity:
A.c ~~ P.c
A.f ~~ P.f
A.m ~~ P.m
A.y ~~ P.y
```

```
# Dyadic reciprocity:
R.c.f ~~ R.f.c
R.c.m ~~ R.m.c
R.c.y ~~ R.y.c
R.f.m ~~ R.m.f
R.f.y ~~ R.y.f
R.m.y ~~ R.y.m

c_f_anx ~~ 0*c_f_anx
c_m_anx ~~ 0*c_m_anx
c_y_anx ~~ 0*c_y_anx
f_c_anx ~~ 0*f_c_anx
f_m_anx ~~ 0*f_m_anx
f_y_anx ~~ 0*f_y_anx
m_c_anx ~~ 0*m_c_anx
m_f_anx ~~ 0*m_f_anx
m_y_anx ~~ 0*m_y_anx
y_c_anx ~~ 0*y_c_anx
y_f_anx ~~ 0*y_f_anx
y_m_anx ~~ 0*y_m_anx

## Compute structured means
# Define labels for subsequent constraints
 FE ~ .means.FE*1
A.c ~ .means.A.c*1
A.f ~ .means.A.f*1
A.m ~ .means.A.m*1
A.y ~ .means.A.y*1
P.c ~ .means.P.c*1
P.f ~ .means.P.f*1
P.m ~ .means.P.m*1
P.y ~ .means.P.y*1
R.c.f ~ .means.R.c.f*1
R.c.m ~ .means.R.c.m*1
R.c.y ~ .means.R.c.y*1
R.f.c ~ .means.R.f.c*1
```

```
R.f.m ~ .means.R.f.m*1
R.f.y ~ .means.R.f.y*1
R.m.c ~ .means.R.m.c*1
R.m.f ~ .means.R.m.f*1
R.m.y ~ .means.R.m.y*1
R.y.c ~ .means.R.y.c*1
R.y.f ~ .means.R.y.f*1
R.y.m ~ .means.R.y.m*1


# set means of observed variables to zero
c_f_anx ~ 0*1
c_m_anx ~ 0*1
c_y_anx ~ 0*1
f_c_anx ~ 0*1
f_m_anx ~ 0*1
f_y_anx ~ 0*1
m_c_anx ~ 0*1
m_f_anx ~ 0*1
m_y_anx ~ 0*1
y_c_anx ~ 0*1
y_f_anx ~ 0*1
y_m_anx ~ 0*1

# set constraints on means for identifiability
.means.A.c + .means.A.f + .means.A.m +
 .means.A.y == 0
.means.P.c + .means.P.f + .means.P.m +
 .means.P.y == 0
.means.R.c.f + .means.R.c.m + .means.R.c.y == 0
.means.R.f.c + .means.R.f.m + .means.R.f.y == 0
.means.R.m.c + .means.R.m.f + .means.R.m.y == 0
.means.R.y.c + .means.R.y.f + .means.R.y.m == 0
.means.R.f.c + .means.R.m.c + .means.R.y.c == 0
.means.R.c.f + .means.R.m.f + .means.R.y.f == 0
.means.R.c.m + .means.R.f.m + .means.R.y.m == 0
.means.R.c.y + .means.R.f.y + .means.R.m.y == 0
```

Main goal

Family researchers often find it hard to perform the analyses

```
# Family effect:
FE =~  1*c_f_anx + 1*c_m_anx + 1*c_y_anx +
1*f_c_anx + 1*f_m_anx + 1*f_y_anx +
1*m_c_anx + 1*m_f_anx + 1*m_y_anx +
1*y_c_anx + 1*y_f_anx + 1*y_m_anx

# Actor effects:
A.c =~ 1*c_f_anx + 1*c_m_anx + 1*c_y_anx
A.f =~ 1*f_c_anx + 1*f_m_anx + 1*f_y_anx
A.m =~ 1*m_c_anx + 1*m_f_anx + 1*m_y_anx
A.y =~ 1*y_c_anx + 1*y_f_anx + 1*y_m_anx

# Partner effects:
P.c =~ 1*f_c_anx + 1*m_c_anx + 1*y_c_anx
P.f =~ 1*c_f_anx + 1*m_f_anx + 1*y_f_anx
P.m =~ 1*c_m_anx + 1*f_m_anx + 1*y_m_anx
P.y =~ 1*c_y_anx + 1*f_y_anx + 1*m_y_anx

# Relationship effects:
R.c.f =~ 1* c_f_anx
R.c.m =~ 1* c_m_anx
R.c.y =~ 1* c_y_anx
R.f.c =~ 1* f_c_anx
R.f.m =~ 1* f_m_anx
R.f.y =~ 1* f_y_anx
R.m.c =~ 1* m_c_anx
R.m.f =~ 1* m_f_anx
R.m.y =~ 1* m_y_anx
R.y.c =~ 1* y_c_anx
R.y.f =~ 1* y_f_anx
R.y.m =~ 1* y_m_anx

# Generalized reciprocity:
A.c ~~ P.c
A.f ~~ P.f
A.m ~~ P.m
A.y ~~ P.y
```

```
# Dyadic reciprocity:
R.c.f ~~ R.f.c
R.c.m ~~ R.m.c
R.c.y ~~ R.y.c
R.f.m ~~ R.m.f
R.f.y ~~ R.y.f
R.m.y ~~ R.y.m

c_f_anx ~~ 0*c_f_anx
c_m_anx ~~ 0*c_m_anx
c_y_anx ~~ 0*c_y_anx
f_c_anx ~~ 0*f_c_anx
f_m_anx ~~ 0*f_m_anx
f_y_anx ~~ 0*f_y_anx
m_c_anx ~~ 0*m_c_anx
m_f_anx ~~ 0*m_f_anx
m_y_anx ~~ 0*m_y_anx
y_c_anx ~~ 0*y_c_anx
y_f_anx ~~ 0*y_f_anx
y_m_anx ~~ 0*y_m_anx

## Compute structured means
# Define labels for subsequent constraints
 FE ~ .means.FE*1
A.c ~ .means.A.c*1
A.f ~ .means.A.f*1
A.m ~ .means.A.m*1
A.y ~ .means.A.y*1
P.c ~ .means.P.c*1
P.f ~ .means.P.f*1
P.m ~ .means.P.m*1
P.y ~ .means.P.y*1
R.c.f ~ .means.R.c.f*1
R.c.m ~ .means.R.c.m*1
R.c.y ~ .means.R.c.y*1
R.f.c ~ .means.R.f.c*1
```

```
R.f.m ~ .means.R.f.m*1
R.f.y ~ .means.R.f.y*1
R.m.c ~ .means.R.m.c*1
R.m.f ~ .means.R.m.f*1
R.m.y ~ .means.R.m.y*1
R.y.c ~ .means.R.y.c*1
R.y.f ~ .means.R.y.f*1
R.y.m ~ .means.R.y.m*1


# set means of observed variables to zero
c_f_anx ~ 0*1
c_m_anx ~ 0*1
c_y_anx ~ 0*1
f_c_anx ~ 0*1
f_m_anx ~ 0*1
f_y_anx ~ 0*1
m_c_anx ~ 0*1
m_f_anx ~ 0*1
m_y_anx ~ 0*1
y_c_anx ~ 0*1
y_f_anx ~ 0*1
y_m_anx ~ 0*1

# set constraints on means for identifiability
.means.A.c + .means.A.f + .means.A.m +
 .means.A.y == 0
.means.P.c + .means.P.f + .means.P.m +
 .means.P.y == 0
.means.R.c.f + .means.R.c.m + .means.R.c.y == 0
.means.R.f.c + .means.R.f.m + .means.R.f.y == 0
.means.R.m.c + .means.R.m.f + .means.R.m.y == 0
.means.R.y.c + .means.R.y.f + .means.R.y.m == 0
.means.R.f.c + .means.R.m.c + .means.R.y.c == 0
.means.R.c.f + .means.R.m.f + .means.R.y.f == 0
.means.R.c.m + .means.R.f.m + .means.R.y.m == 0
.means.R.c.y + .means.R.f.y + .means.R.m.y == 0
```

Main goal

Family researchers often find it hard to perform the analyses

With fSRM:

```
fSRM(DV ~ actor.id, partner.id | family.id, means = T, data = dat)
```

fSRM will help!

- User-friendly R-package
- Based on lavaan (Rosseel, 2012)
- Easily insert, transform and analyze data in R
- Goes beyond the standard SRM analyses

Outline

Study of Eichelsheim et al. (2001)

- Patterns of negativity (NRI)
- Families with and without adolescent with externalizing problem behavior
- Group comparison clinical (n = 120) and nonclinical (n = 153) sample
- Simulated dataset

Outline

fSRM: A **user-friendly** R-package for SRM analyses

- Easily insert your data in R

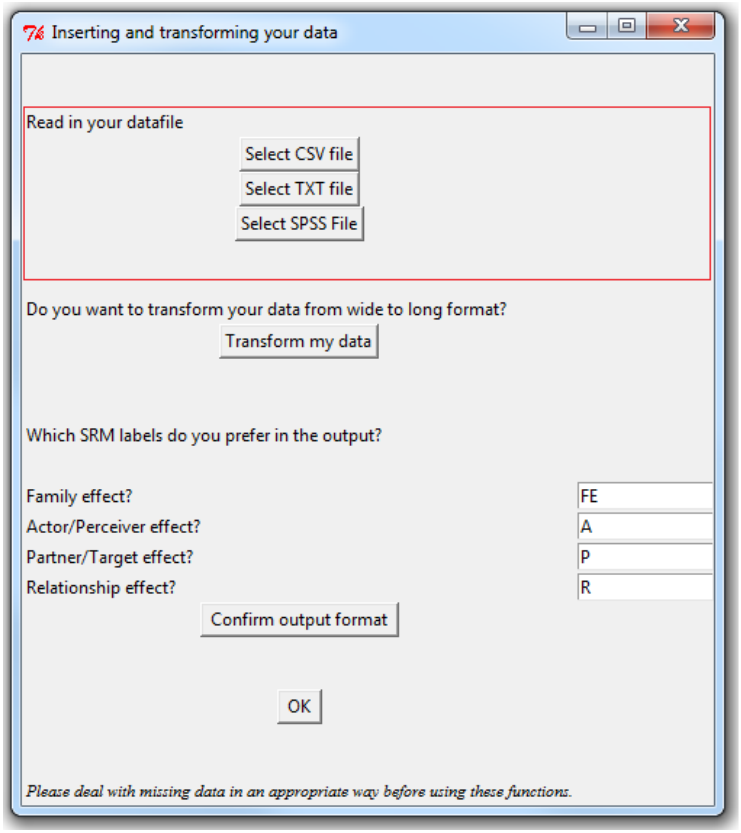

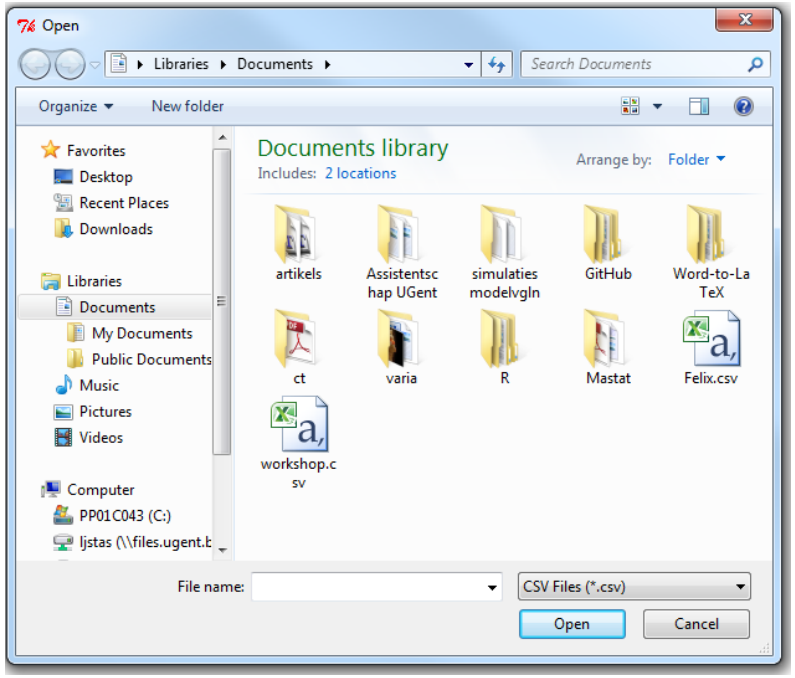

R-package

fSRM: A **user-friendly** R-package for SRM analyses

- Easy to transform a dataset to long format

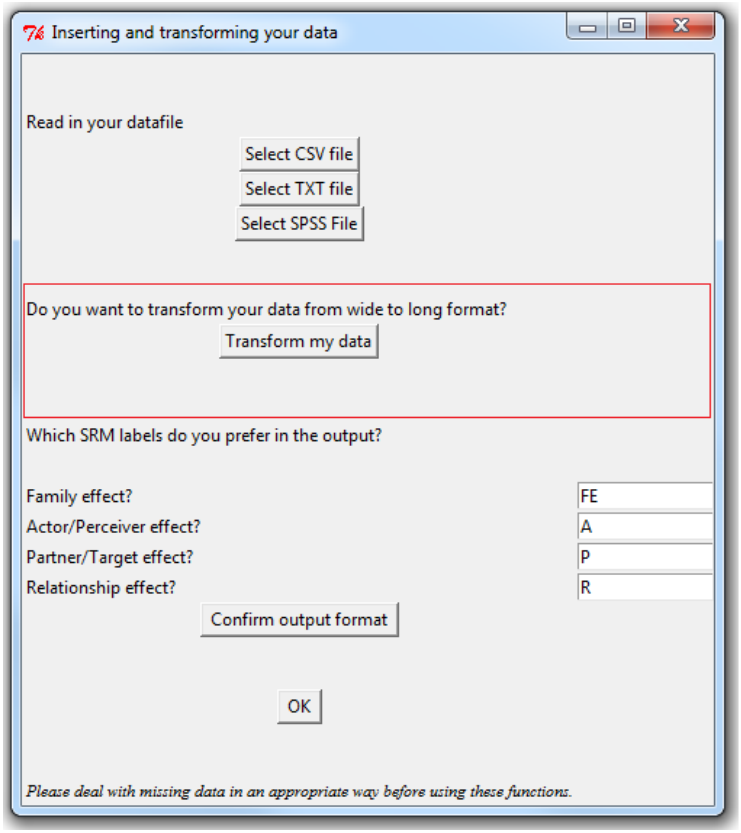

fSRM: A **user-friendly** R-package for SRM analyses

- Easy to transform a dataset to long format

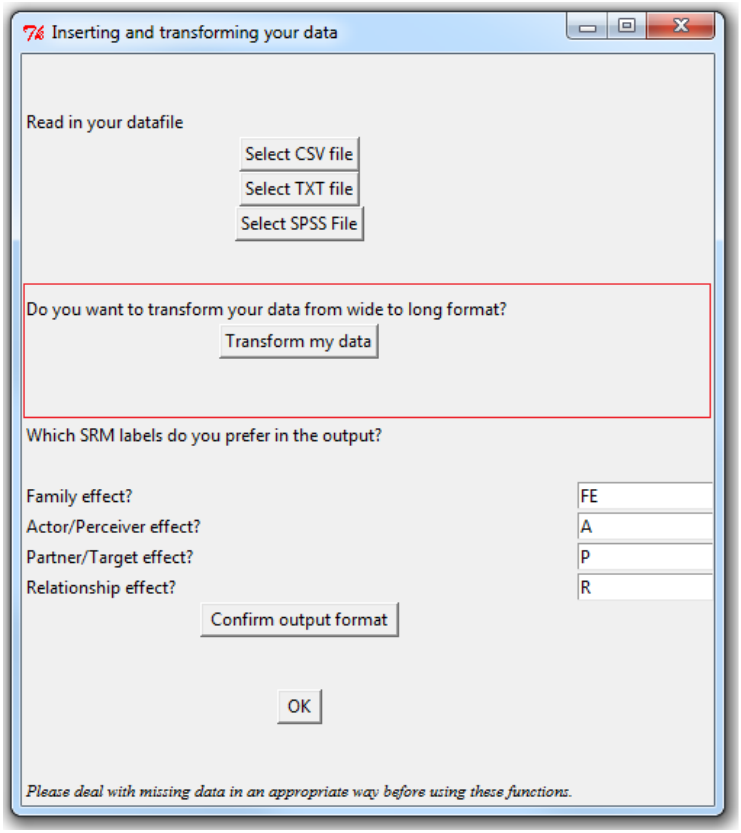

	family_ID	mfanx	mcanx	myanx
1	1	1.000000	1.500000	1.500000
2	2	2.166667	2.000000	2.166667
3	3	1.166667	1.333333	1.000000

	family.id	variable	value	actor.id	partner.id	ind
1	1	mfanx	1.000000	m	f	anx
2	2	mfanx	2.166667	m	f	anx
3	3	mfanx	1.166667	m	f	anx
• • •						
209	1	mcanx	1.500000	m	c	anx
210	2	mcanx	2.000000	m	c	anx
211	3	mcanx	1.333333	m	c	anx
• • •						
417	1	myanx	1.500000	m	y	anx
418	2	myanx	2.166667	m	y	anx
419	3	myanx	1.000000	m	y	anx

fSRM: A **user-friendly** R-package for SRM analyses

- Easy to transform a dataset to long format

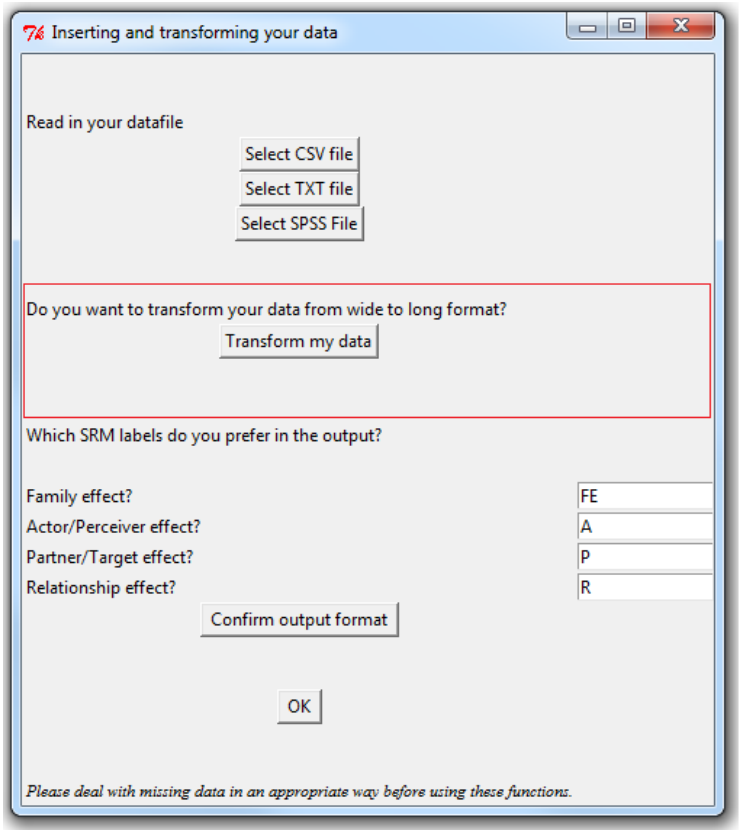

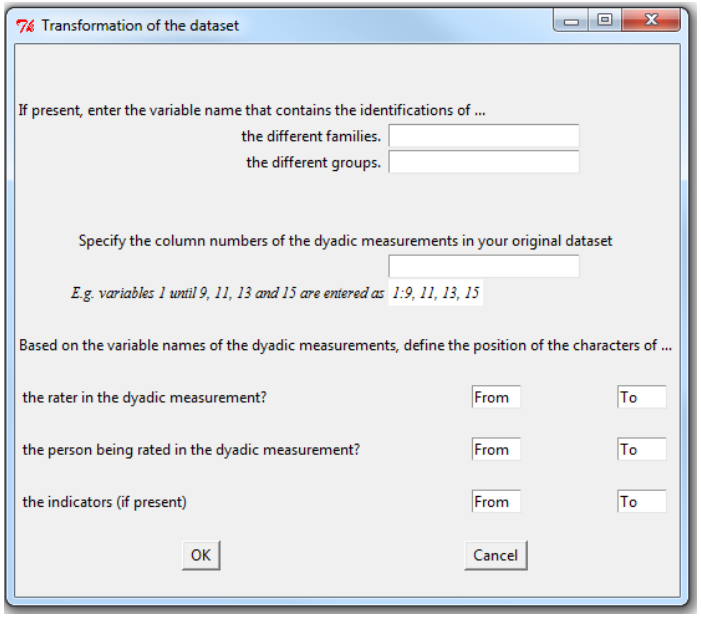

R-package

fSRM: A **user-friendly** R-package for SRM analyses

- The labels in the output can be customized

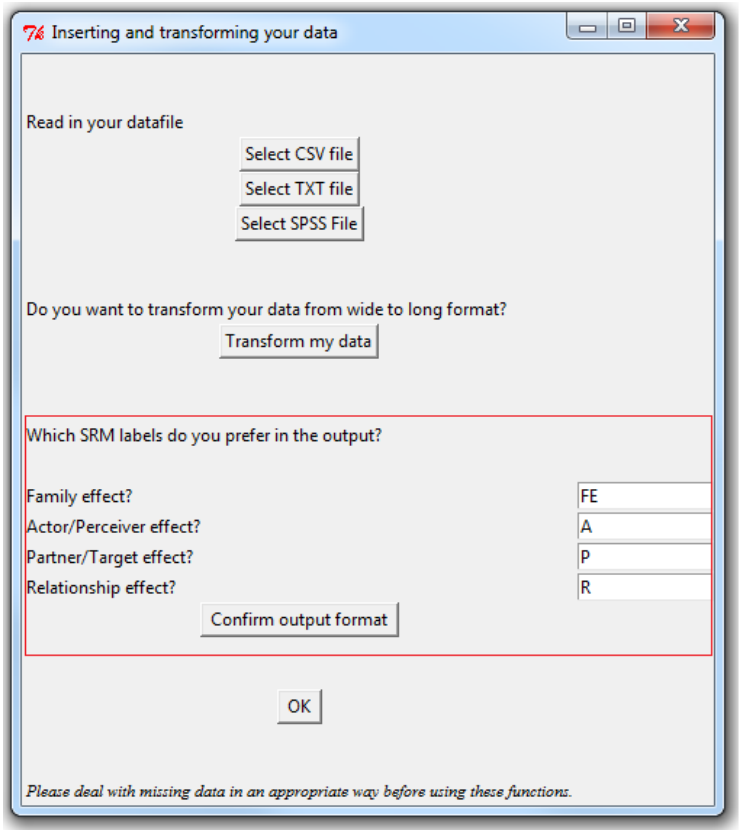

```
# Load the package
  install.packages("fSRM")
  library("fSRM")

# Load data and select clinical group
  data(two.groups)
  clinical <- subset(two.groups, group==1)

# Run the basic SRM analysis
  fSRM.1gr <- fSRM(neg1/neg2 ~ actor.id * partner.id |
                   family.id, data = clinical)
```

- Only SRM variance are requested
- Two indicators $\Rightarrow$ SRM relationship partitioned from error

```
----------------
SRM with roles (latent) (Roles: C1, C2, FA, MO ; DVs =  neg1 neg2 ) :
----------------

Model summary:
----------------
lavaan (0.5-12) converged normally after  65 iterations

  Number of observations                           120

  Estimator                                         ML
  Minimum Function Test Statistic              110.720
  Degrees of freedom                               113
  P-value (Chi-square)                           0.543
```

1. Information about the model fit
2. Information about the SRM variances

1 Model Fit:

```
----------------
Chi2 (df=113) = 110.72, p = 0.543
CFI = 1
TLI / NNFI = 1.011
RMSEA = 0 [0;0.044]; Test of close fit: p(data | true value == .05)
                                        = 0.979
```

2 Variance decomposition:

```
----------------
             component estimate    se     z p.value ci.lower ci.upper
1             FE ~~ FE    0.019 0.018 1.058   0.290   -0.016    0.054
2        A.C1 ~~ A.C1    0.086 0.040 2.131   0.033    0.007    0.165
3        A.C2 ~~ A.C2    0.138 0.045 3.090   0.002    0.051    0.226
4        A.FA ~~ A.FA    0.010 0.026 0.385   0.700   -0.042    0.062
5        A.MO ~~ A.MO    0.009 0.028 0.321   0.749   -0.045    0.063
6        P.C1 ~~ P.C1    0.078 0.034 2.306   0.021    0.012    0.143
7        P.C2 ~~ P.C2    0.061 0.033 1.836   0.066   -0.004    0.126
8        P.FA ~~ P.FA    0.079 0.035 2.294   0.022    0.012    0.147
9        P.MO ~~ P.MO    0.014 0.032 0.448   0.654   -0.048    0.076
10 R.C1.C2 ~~ R.C1.C2    0.507 0.114 4.435   0.000    0.283    0.731
11 R.C1.FA ~~ R.C1.FA    0.234 0.077 3.038   0.002    0.083    0.385
12 R.C1.MO ~~ R.C1.MO    0.275 0.085 3.230   0.001    0.108    0.441
13 R.C2.C1 ~~ R.C2.C1    0.204 0.091 2.243   0.025    0.026    0.382
14 R.C2.FA ~~ R.C2.FA    0.177 0.076 2.327   0.020    0.028    0.327
15 R.C2.MO ~~ R.C2.MO    0.329 0.087 3.779   0.000    0.159    0.500
16 R.FA.C1 ~~ R.FA.C1    0.225 0.064 3.514   0.000    0.099    0.350
17 R.FA.C2 ~~ R.FA.C2    0.078 0.059 1.319   0.187   -0.038    0.195
18 R.FA.MO ~~ R.FA.MO    0.169 0.072 2.360   0.018    0.029    0.310
19 R.MO.C1 ~~ R.MO.C1    0.109 0.063 1.731   0.083   -0.014    0.232
20 R.MO.C2 ~~ R.MO.C2    0.218 0.075 2.901   0.004    0.071    0.365
21 R.MO.FA ~~ R.MO.FA    0.197 0.065 3.030   0.002    0.070    0.325
```

```
----------------
SRM with roles (latent) (Roles: C1, C2, FA, MO ; DVs =  neg1 neg2 ) :
----------------

Model summary:
----------------
lavaan (0.5-12) converged normally after  65 iterations

  Number of observations                           120

  Estimator                                         ML
  Minimum Function Test Statistic              110.720
  Degrees of freedom                               113
  P-value (Chi-square)                           0.543
```

1 Model Fit:

```
----------------
Chi2 (df=113) = 110.72, p = 0.543
CFI = 1
TLI / NNFI = 1.011
RMSEA = 0 [0;0.044]; Test of close fit: p(data | true value == .05)
                                        = 0.979
```

2 Variance decomposition:

```
----------------
             component estimate    se     z p.value ci.lower ci.upper
1             FE ~~ FE    0.019 0.018 1.058   0.290   -0.016    0.054
2        A.C1 ~~ A.C1    0.086 0.040 2.131   0.033    0.007    0.165
3        A.C2 ~~ A.C2    0.138 0.045 3.090   0.002    0.051    0.226
4        A.FA ~~ A.FA    0.010 0.026 0.385   0.700   -0.042    0.062
5        A.MO ~~ A.MO    0.009 0.028 0.321   0.749   -0.045    0.063
6        P.C1 ~~ P.C1    0.078 0.034 2.306   0.021    0.012    0.143
7        P.C2 ~~ P.C2    0.061 0.033 1.836   0.066   -0.004    0.126
8        P.FA ~~ P.FA    0.079 0.035 2.294   0.022    0.012    0.147
9        P.MO ~~ P.MO    0.014 0.032 0.448   0.654   -0.048    0.076
10 R.C1.C2 ~~ R.C1.C2    0.507 0.114 4.435   0.000    0.283    0.731
11 R.C1.FA ~~ R.C1.FA    0.234 0.077 3.038   0.002    0.083    0.385
12 R.C1.MO ~~ R.C1.MO    0.275 0.085 3.230   0.001    0.108    0.441
13 R.C2.C1 ~~ R.C2.C1    0.204 0.091 2.243   0.025    0.026    0.382
14 R.C2.FA ~~ R.C2.FA    0.177 0.076 2.327   0.020    0.028    0.327
15 R.C2.MO ~~ R.C2.MO    0.329 0.087 3.779   0.000    0.159    0.500
16 R.FA.C1 ~~ R.FA.C1    0.225 0.064 3.514   0.000    0.099    0.350
17 R.FA.C2 ~~ R.FA.C2    0.078 0.059 1.319   0.187   -0.038    0.195
18 R.FA.MO ~~ R.FA.MO    0.169 0.072 2.360   0.018    0.029    0.310
19 R.MO.C1 ~~ R.MO.C1    0.109 0.063 1.731   0.083   -0.014    0.232
20 R.MO.C2 ~~ R.MO.C2    0.218 0.075 2.901   0.004    0.071    0.365
21 R.MO.FA ~~ R.MO.FA    0.197 0.065 3.030   0.002    0.070    0.325
```

1. Information about the model fit
   - Good fit according to the χ^2 ($p > 0.05$)
2. Information about the SRM variances

```
----------------
SRM with roles (latent) (Roles: C1, C2, FA, MO ; DVs =  neg1 neg2 ) :
----------------

Model summary:
----------------
lavaan (0.5-12) converged normally after  65 iterations

  Number of observations                           120

  Estimator                                         ML
  Minimum Function Test Statistic              110.720
  Degrees of freedom                               113
  P-value (Chi-square)                           0.543
```

1 Model Fit:

```
----------------
Chi2 (df=113) = 110.72, p = 0.543
CFI = 1
TLI / NNFI = 1.011
RMSEA = 0 [0;0.044]; Test of close fit: p(data | true value == .05)
                                        = 0.979
```

2 Variance decomposition:

```
----------------
             component estimate    se     z p.value ci.lower ci.upper
1            FE ~~ FE    0.019 0.018 1.058   0.290   -0.016    0.054
2        A.C1 ~~ A.C1    0.086 0.040 2.131   0.033    0.007    0.165
3        A.C2 ~~ A.C2    0.138 0.045 3.090   0.002    0.051    0.226
4        A.FA ~~ A.FA    0.010 0.026 0.385   0.700   -0.042    0.062
5        A.MO ~~ A.MO    0.009 0.028 0.321   0.749   -0.045    0.063
6        P.C1 ~~ P.C1    0.078 0.034 2.306   0.021    0.012    0.143
7        P.C2 ~~ P.C2    0.061 0.033 1.836   0.066   -0.004    0.126
8        P.FA ~~ P.FA    0.079 0.035 2.294   0.022    0.012    0.147
9        P.MO ~~ P.MO    0.014 0.032 0.448   0.654   -0.048    0.076
10 R.C1.C2 ~~ R.C1.C2    0.507 0.114 4.435   0.000    0.283    0.731
11 R.C1.FA ~~ R.C1.FA    0.234 0.077 3.038   0.002    0.083    0.385
12 R.C1.MO ~~ R.C1.MO    0.275 0.085 3.230   0.001    0.108    0.441
13 R.C2.C1 ~~ R.C2.C1    0.204 0.091 2.243   0.025    0.026    0.382
14 R.C2.FA ~~ R.C2.FA    0.177 0.076 2.327   0.020    0.028    0.327
15 R.C2.MO ~~ R.C2.MO    0.329 0.087 3.779   0.000    0.159    0.500
16 R.FA.C1 ~~ R.FA.C1    0.225 0.064 3.514   0.000    0.099    0.350
17 R.FA.C2 ~~ R.FA.C2    0.078 0.059 1.319   0.187   -0.038    0.195
18 R.FA.MO ~~ R.FA.MO    0.169 0.072 2.360   0.018    0.029    0.310
19 R.MO.C1 ~~ R.MO.C1    0.109 0.063 1.731   0.083   -0.014    0.232
20 R.MO.C2 ~~ R.MO.C2    0.218 0.075 2.901   0.004    0.071    0.365
21 R.MO.FA ~~ R.MO.FA    0.197 0.065 3.030   0.002    0.070    0.325
```

1. Information about the model fit

2. Information about the SRM variances
   - e.g., some target adolescents experience more negativity in relation to his/her family members than others

3 Relative variance decomposition:

	Family	Actor	Partner	Relationship	Error	explained
C1_C2	2	7	5	41	45	55
C1_FA	2	10	10	29	49	51
C1_MO	2	11	2	34	51	49
C2_C1	2	14	8	20	57	43
C2_FA	2	17	10	22	49	51
C2_MO	2	14	1	34	48	52
FA_C1	3	2	12	35	48	52
FA_C2	3	2	11	14	69	31
FA_MO	3	2	2	25	69	31
MO_C1	3	1	12	17	67	33
MO_C2	2	1	8	27	62	38
MO_FA	3	1	11	29	56	44
mean	2	7	8	27	56	44

4 Generalized reciprocity (actor-partner covariances):

	component	estimate	se	z	p.value	ci.lower	ci.upper	r
1	A.C1 ~~ P.C1	0.031	0.028	1.083	0.279	-0.025	0.086	0.377
2	A.C2 ~~ P.C2	-0.014	0.029	-0.474	0.635	-0.071	0.043	-0.150
3	A.FA ~~ P.FA	0.012	0.024	0.482	0.630	-0.036	0.060	0.414
4	A.MO ~~ P.MO	0.013	0.023	0.555	0.579	-0.033	0.059	NA

5 Dyadic reciprocity (relationship covariances): Mean r = 0.491 (out of bounds estimates set to NA)

	component	estimate	se	z	p.value	ci.lower	ci.upper	r
1	R.C1.C2 ~~ R.C2.C1	0.238	0.076	3.144	0.002	0.089	0.386	0.739
2	R.C1.FA ~~ R.FA.C1	0.129	0.053	2.456	0.014	0.026	0.232	0.563
3	R.C1.MO ~~ R.MO.C1	-0.049	0.053	-0.930	0.352	-0.152	0.054	-0.283
4	R.C2.FA ~~ R.FA.C2	0.139	0.049	2.834	0.005	0.043	0.236	NA
5	R.C2.MO ~~ R.MO.C2	0.113	0.058	1.934	0.053	-0.001	0.227	0.421
6	R.FA.MO ~~ R.MO.FA	0.134	0.051	2.660	0.008	0.035	0.233	0.736

3 Relative importance of each SRM component
- per observed relationship
- averaged

4 Generalized reciprocities

5 Dyadic reciprocities

3. Relative variance decomposition:

	Family	Actor	Partner	Relationship	Error	explained
C1_C2	2	7	5	41	45	55
C1_FA	2	10	10	29	49	51
C1_MO	2	11	2	34	51	49
C2_C1	2	14	8	20	57	43
C2_FA	2	17	10	22	49	51
C2_MO	2	14	1	34	48	52
FA_C1	3	2	12	35	48	52
FA_C2	3	2	11	14	69	31
FA_MO	3	2	2	25	69	31
MO_C1	3	1	12	17	67	33
MO_C2	2	1	8	27	62	38
MO_FA	3	1	11	29	56	44
mean	2	7	8	27	56	44

4. Generalized reciprocity (actor-partner covariances):

	component	estimate	se	z	p.value	ci.lower	ci.upper	r
1	A.C1 ~~ P.C1	0.031	0.028	1.083	0.279	-0.025	0.086	0.377
2	A.C2 ~~ P.C2	-0.014	0.029	-0.474	0.635	-0.071	0.043	-0.150
3	A.FA ~~ P.FA	0.012	0.024	0.482	0.630	-0.036	0.060	0.414
4	A.MO ~~ P.MO	0.013	0.023	0.555	0.579	-0.033	0.059	NA

5. Dyadic reciprocity (relationship covariances): Mean r = 0.491 (out of bounds estimates set to NA)

	component	estimate	se	z	p.value	ci.lower	ci.upper	r
1	R.C1.C2 ~~ R.C2.C1	0.238	0.076	3.144	0.002	0.089	0.386	0.739
2	R.C1.FA ~~ R.FA.C1	0.129	0.053	2.456	0.014	0.026	0.232	0.563
3	R.C1.MO ~~ R.MO.C1	-0.049	0.053	-0.930	0.352	-0.152	0.054	-0.283
4	R.C2.FA ~~ R.FA.C2	0.139	0.049	2.834	0.005	0.043	0.236	NA
5	R.C2.MO ~~ R.MO.C2	0.113	0.058	1.934	0.053	-0.001	0.227	0.421
6	R.FA.MO ~~ R.MO.FA	0.134	0.051	2.660	0.008	0.035	0.233	0.736

3. Relative importance of each SRM component

4. Generalized reciprocities
   - Not *what you give is what you get*

5. Dyadic reciprocities

3 Relative variance decomposition:

	Family	Actor	Partner	Relationship	Error	explained
C1_C2	2	7	5	41	45	55
C1_FA	2	10	10	29	49	51
C1_MO	2	11	2	34	51	49
C2_C1	2	14	8	20	57	43
C2_FA	2	17	10	22	49	51
C2_MO	2	14	1	34	48	52
FA_C1	3	2	12	35	48	52
FA_C2	3	2	11	14	69	31
FA_MO	3	2	2	25	69	31
MO_C1	3	1	12	17	67	33
MO_C2	2	1	8	27	62	38
MO_FA	3	1	11	29	56	44
mean	2	7	8	27	56	44

4 Generalized reciprocity (actor-partner covariances):

	component	estimate	se	z	p.value	ci.lower	ci.upper	r
1	A.C1 ~~ P.C1	0.031	0.028	1.083	0.279	-0.025	0.086	0.377
2	A.C2 ~~ P.C2	-0.014	0.029	-0.474	0.635	-0.071	0.043	-0.150
3	A.FA ~~ P.FA	0.012	0.024	0.482	0.630	-0.036	0.060	0.414
4	A.MO ~~ P.MO	0.013	0.023	0.555	0.579	-0.033	0.059	NA

5 Dyadic reciprocity (relationship covariances): Mean r = 0.491 (out of bounds estimates set to NA)

	component	estimate	se	z	p.value	ci.lower	ci.upper	r
1	R.C1.C2 ~~ R.C2.C1	0.238	0.076	3.144	0.002	0.089	0.386	0.739
2	R.C1.FA ~~ R.FA.C1	0.129	0.053	2.456	0.014	0.026	0.232	0.563
3	R.C1.MO ~~ R.MO.C1	-0.049	0.053	-0.930	0.352	-0.152	0.054	-0.283
4	R.C2.FA ~~ R.FA.C2	0.139	0.049	2.834	0.005	0.043	0.236	NA
5	R.C2.MO ~~ R.MO.C2	0.113	0.058	1.934	0.053	-0.001	0.227	0.421
6	R.FA.MO ~~ R.MO.FA	0.134	0.051	2.660	0.008	0.035	0.233	0.736

3. Relative importance of each SRM component

4. Generalized reciprocities

5. Dyadic reciprocities
   - Unique negativity of target adolescent towards father, and vice versa, correlate
   - Mother is the exception in relation to her children

3 Relative variance decomposition:

	Family	Actor	Partner	Relationship	Error	explained
C1_C2	2	7	5	41	45	55
C1_FA	2	10	10	29	49	51
C1_MO	2	11	2	34	51	49
C2_C1	2	14	8	20	57	43
C2_FA	2	17	10	22	49	51
C2_MO	2	14	1	34	48	52
FA_C1	3	2	12	35	48	52
FA_C2	3	2	11	14	69	31
FA_MO	3	2	2	25	69	31
MO_C1	3	1	12	17	67	33
MO_C2	2	1	8	27	62	38
MO_FA	3	1	11	29	56	44
mean	2	7	8	27	56	44

4 Generalized reciprocity (actor-partner covariances):

	component	estimate	se	z	p.value	ci.lower	ci.upper	r
1	A.C1 ~~ P.C1	0.031	0.028	1.083	0.279	-0.025	0.086	0.377
2	A.C2 ~~ P.C2	-0.014	0.029	-0.474	0.635	-0.071	0.043	-0.150
3	A.FA ~~ P.FA	0.012	0.024	0.482	0.630	-0.036	0.060	0.414
4	A.MO ~~ P.MO	0.013	0.023	0.555	0.579	-0.033	0.059	NA

5 Dyadic reciprocity (relationship covariances): Mean r = 0.491 (out of bounds estimates set to NA)

	component	estimate	se	z	p.value	ci.lower	ci.upper	r
1	R.C1.C2 ~~ R.C2.C1	0.238	0.076	3.144	0.002	0.089	0.386	0.739
2	R.C1.FA ~~ R.FA.C1	0.129	0.053	2.456	0.014	0.026	0.232	0.563
3	R.C1.MO ~~ R.MO.C1	-0.049	0.053	-0.930	0.352	-0.152	0.054	-0.283
4	R.C2.FA ~~ R.FA.C2	0.139	0.049	2.834	0.005	0.043	0.236	NA
5	R.C2.MO ~~ R.MO.C2	0.113	0.058	1.934	0.053	-0.001	0.227	0.421
6	R.FA.MO ~~ R.MO.FA	0.134	0.051	2.660	0.008	0.035	0.233	0.736

3. Relative importance of each SRM component

4. Generalized reciprocities

5. Dyadic reciprocities
   - Unique negativity of target adolescent towards father, and vice versa, correlate
   - Mother is the exception in relation to her children

Additional analysis:

- Mean SRM components
- Intragenerational similarities
- Pairwise comparisons of actor (or partner) effects between two roles

```
fSRM.extra <- fSRM(neg1/neg2 ~ actor.id * partner.id |
              family.id, data = clinical,
```

Additional analysis:

- Mean SRM components
- Intragenerational similarities
- Pairwise comparisons of actor (or partner) effects between two roles

```
fSRM.extra <- fSRM(neg1/neg2 ~ actor.id * partner.id |
              family.id, data = clinical,
              means = T,
```

Additional analysis:

- Mean SRM components
- Intragenerational similarities
- Pairwise comparisons of actor (or partner) effects between two roles

```
fSRM.extra <- fSRM(neg1/neg2 ~ actor.id * partner.id |
              family.id, data = clinical,
              means = T,
              IGSIM=list(c("MO", "FA"), c("C1", "C2")),
```

Additional analysis:

- Mean SRM components
- Intragenerational similarities
- Pairwise comparisons of actor (or partner) effects between two roles

```
fSRM.extra <- fSRM(neg1/neg2 ~ actor.id * partner.id |
              family.id, data = clinical,
              means = T,
              IGSIM=list(c("MO", "FA"), c("C1", "C2")),
              pairwise = TRUE)
```

6 Intragenerational similarity:

	component	estimate	se	z	p.value	ci.lower	ci.upper	r
107	A.FA ~~ A.MO	-0.008	0.022	-0.364	0.716	-0.051	0.035	NA
108	P.FA ~~ P.MO	0.056	0.028	1.994	0.046	0.001	0.111	NA
109	A.C1 ~~ A.C2	0.008	0.030	0.272	0.786	-0.050	0.067	0.088
110	P.C1 ~~ P.C2	-0.013	0.025	-0.512	0.609	-0.061	0.035	-0.183

7 Mean structure: Indices starting with 'C.' are pairwise comparisons between roles

	factor	estimate	se	z	p.value	ci.lower	ci.upper
1	FE	1.854	0.027	68.029	0.000	1.801	1.908
2	A.C1	0.383	0.038	10.076	0.000	0.308	0.457
3	A.C2	0.149	0.040	3.693	0.000	0.070	0.229
4	A.FA	-0.289	0.033	-8.778	0.000	-0.353	-0.224
5	A.MO	-0.243	0.034	-7.211	0.000	-0.310	-0.177
6	P.C1	0.312	0.038	8.179	0.000	0.237	0.387
7	P.C2	0.151	0.037	4.042	0.000	0.078	0.224
8	P.FA	-0.239	0.036	-6.627	0.000	-0.309	-0.168
9	P.MO	-0.224	0.035	-6.441	0.000	-0.292	-0.156
10	R.C1.C2	0.168	0.040	4.212	0.000	0.090	0.246
11	R.C1.FA	-0.099	0.038	-2.637	0.008	-0.173	-0.025
12	R.C1.MO	-0.069	0.040	-1.734	0.083	-0.147	0.009
13	R.C2.C1	0.276	0.037	7.507	0.000	0.204	0.348
14	R.C2.FA	-0.138	0.035	-3.889	0.000	-0.207	-0.068
15	R.C2.MO	-0.138	0.038	-3.608	0.000	-0.213	-0.063
16	R.FA.C1	-0.117	0.033	-3.588	0.000	-0.181	-0.053
17	R.FA.C2	-0.090	0.035	-2.564	0.010	-0.159	-0.021
18	R.FA.MO	0.207	0.039	5.362	0.000	0.131	0.283
19	R.MO.C1	-0.159	0.034	-4.649	0.000	-0.226	-0.092
20	R.MO.C2	-0.078	0.035	-2.229	0.026	-0.146	-0.009
21	R.MO.FA	0.237	0.035	6.682	0.000	0.167	0.306
8 22	C.means.A.C1.C2	0.233	0.065	3.613	0.000	0.107	0.360
23	C.means.P.C1.C2	0.161	0.059	2.716	0.007	0.045	0.277
24	C.means.A.C1.FA	0.672	0.058	11.671	0.000	0.559	0.785
25	C.means.P.C1.FA	0.551	0.062	8.941	0.000	0.430	0.671
26	C.means.A.C1.MO	0.626	0.060	10.448	0.000	0.509	0.744
27	C.means.P.C1.MO	0.536	0.062	8.611	0.000	0.414	0.658
28	C.means.A.C2.FA	0.438	0.062	7.048	0.000	0.316	0.560
29	C.means.P.C2.FA	0.390	0.063	6.215	0.000	0.267	0.513
30	C.means.A.C2.MO	0.393	0.062	6.362	0.000	0.272	0.514
31	C.means.P.C2.MO	0.375	0.059	6.339	0.000	0.259	0.491
32	C.means.A.FA.MO	-0.045	0.050	-0.916	0.360	-0.143	0.052
33	C.means.P.FA.MO	-0.015	0.053	-0.278	0.781	-0.119	0.089

6 Intragenerational similarities

7 Mean SRM components

8 Pairwise comparisons

6 Intragenerational similarity:

	component	estimate	se	z	p.value	ci.lower	ci.upper	r
107	A.FA ~~ A.MO	-0.008	0.022	-0.364	0.716	-0.051	0.035	NA
108	P.FA ~~ P.MO	0.056	0.028	1.994	0.046	0.001	0.111	NA
109	A.C1 ~~ A.C2	0.008	0.030	0.272	0.786	-0.050	0.067	0.088
110	P.C1 ~~ P.C2	-0.013	0.025	-0.512	0.609	-0.061	0.035	-0.183

7 Mean structure: Indices starting with 'C.' are pairwise comparisons between roles

	factor	estimate	se	z	p.value	ci.lower	ci.upper
1	FE	1.854	0.027	68.029	0.000	1.801	1.908
2	A.C1	0.383	0.038	10.076	0.000	0.308	0.457
3	A.C2	0.149	0.040	3.693	0.000	0.070	0.229
4	A.FA	-0.289	0.033	-8.778	0.000	-0.353	-0.224
5	A.MO	-0.243	0.034	-7.211	0.000	-0.310	-0.177
6	P.C1	0.312	0.038	8.179	0.000	0.237	0.387
7	P.C2	0.151	0.037	4.042	0.000	0.078	0.224
8	P.FA	-0.239	0.036	-6.627	0.000	-0.309	-0.168
9	P.MO	-0.224	0.035	-6.441	0.000	-0.292	-0.156
10	R.C1.C2	0.168	0.040	4.212	0.000	0.090	0.246
11	R.C1.FA	-0.099	0.038	-2.637	0.008	-0.173	-0.025
12	R.C1.MO	-0.069	0.040	-1.734	0.083	-0.147	0.009
13	R.C2.C1	0.276	0.037	7.507	0.000	0.204	0.348
14	R.C2.FA	-0.138	0.035	-3.889	0.000	-0.207	-0.068
15	R.C2.MO	-0.138	0.038	-3.608	0.000	-0.213	-0.063
16	R.FA.C1	-0.117	0.033	-3.588	0.000	-0.181	-0.053
17	R.FA.C2	-0.090	0.035	-2.564	0.010	-0.159	-0.021
18	R.FA.MO	0.207	0.039	5.362	0.000	0.131	0.283
19	R.MO.C1	-0.159	0.034	-4.649	0.000	-0.226	-0.092
20	R.MO.C2	-0.078	0.035	-2.229	0.026	-0.146	-0.009
21	R.MO.FA	0.237	0.035	6.682	0.000	0.167	0.306
8 22	C.means.A.C1.C2	0.233	0.065	3.613	0.000	0.107	0.360
23	C.means.P.C1.C2	0.161	0.059	2.716	0.007	0.045	0.277
24	C.means.A.C1.FA	0.672	0.058	11.671	0.000	0.559	0.785
25	C.means.P.C1.FA	0.551	0.062	8.941	0.000	0.430	0.671
26	C.means.A.C1.MO	0.626	0.060	10.448	0.000	0.509	0.744
27	C.means.P.C1.MO	0.536	0.062	8.611	0.000	0.414	0.658
28	C.means.A.C2.FA	0.438	0.062	7.048	0.000	0.316	0.560
29	C.means.P.C2.FA	0.390	0.063	6.215	0.000	0.267	0.513
30	C.means.A.C2.MO	0.393	0.062	6.362	0.000	0.272	0.514
31	C.means.P.C2.MO	0.375	0.059	6.339	0.000	0.259	0.491
32	C.means.A.FA.MO	-0.045	0.050	-0.916	0.360	-0.143	0.052
33	C.means.P.FA.MO	-0.015	0.053	-0.278	0.781	-0.119	0.089

6 Intragenerational similarities

- Good child - bad child? (not significant)

7 Mean SRM components

8 Pairwise comparisons

6 Intragenerational similarity:

	component	estimate	se	z	p.value	ci.lower	ci.upper	r
107	A.FA ~~ A.MO	-0.008	0.022	-0.364	0.716	-0.051	0.035	NA
108	P.FA ~~ P.MO	0.056	0.028	1.994	0.046	0.001	0.111	NA
109	A.C1 ~~ A.C2	0.008	0.030	0.272	0.786	-0.050	0.067	0.088
110	P.C1 ~~ P.C2	-0.013	0.025	-0.512	0.609	-0.061	0.035	-0.183

7 Mean structure: Indices starting with 'C.' are pairwise comparisons between roles

	factor	estimate	se	z	p.value	ci.lower	ci.upper
1	FE	1.854	0.027	68.029	0.000	1.801	1.908
2	A.C1	0.383	0.038	10.076	0.000	0.308	0.457
3	A.C2	0.149	0.040	3.693	0.000	0.070	0.229
4	A.FA	-0.289	0.033	-8.778	0.000	-0.353	-0.224
5	A.MO	-0.243	0.034	-7.211	0.000	-0.310	-0.177
6	P.C1	0.312	0.038	8.179	0.000	0.237	0.387
7	P.C2	0.151	0.037	4.042	0.000	0.078	0.224
8	P.FA	-0.239	0.036	-6.627	0.000	-0.309	-0.168
9	P.MO	-0.224	0.035	-6.441	0.000	-0.292	-0.156
10	R.C1.C2	0.168	0.040	4.212	0.000	0.090	0.246
11	R.C1.FA	-0.099	0.038	-2.637	0.008	-0.173	-0.025
12	R.C1.MO	-0.069	0.040	-1.734	0.083	-0.147	0.009
13	R.C2.C1	0.276	0.037	7.507	0.000	0.204	0.348
14	R.C2.FA	-0.138	0.035	-3.889	0.000	-0.207	-0.068
15	R.C2.MO	-0.138	0.038	-3.608	0.000	-0.213	-0.063
16	R.FA.C1	-0.117	0.033	-3.588	0.000	-0.181	-0.053
17	R.FA.C2	-0.090	0.035	-2.564	0.010	-0.159	-0.021
18	R.FA.MO	0.207	0.039	5.362	0.000	0.131	0.283
19	R.MO.C1	-0.159	0.034	-4.649	0.000	-0.226	-0.092
20	R.MO.C2	-0.078	0.035	-2.229	0.026	-0.146	-0.009
21	R.MO.FA	0.237	0.035	6.682	0.000	0.167	0.306
8 22	C.means.A.C1.C2	0.233	0.065	3.613	0.000	0.107	0.360
23	C.means.P.C1.C2	0.161	0.059	2.716	0.007	0.045	0.277
24	C.means.A.C1.FA	0.672	0.058	11.671	0.000	0.559	0.785
25	C.means.P.C1.FA	0.551	0.062	8.941	0.000	0.430	0.671
26	C.means.A.C1.MO	0.626	0.060	10.448	0.000	0.509	0.744
27	C.means.P.C1.MO	0.536	0.062	8.611	0.000	0.414	0.658
28	C.means.A.C2.FA	0.438	0.062	7.048	0.000	0.316	0.560
29	C.means.P.C2.FA	0.390	0.063	6.215	0.000	0.267	0.513
30	C.means.A.C2.MO	0.393	0.062	6.362	0.000	0.272	0.514
31	C.means.P.C2.MO	0.375	0.059	6.339	0.000	0.259	0.491
32	C.means.A.FA.MO	-0.045	0.050	-0.916	0.360	-0.143	0.052
33	C.means.P.FA.MO	-0.015	0.053	-0.278	0.781	-0.119	0.089

6 Intragenerational similarities

7 Mean SRM components

8 Pairwise comparisons

6 Intragenerational similarity:

	component	estimate	se	z	p.value	ci.lower	ci.upper	r
107	A.FA ~~ A.MO	-0.008	0.022	-0.364	0.716	-0.051	0.035	NA
108	P.FA ~~ P.MO	0.056	0.028	1.994	0.046	0.001	0.111	NA
109	A.C1 ~~ A.C2	0.008	0.030	0.272	0.786	-0.050	0.067	0.088
110	P.C1 ~~ P.C2	-0.013	0.025	-0.512	0.609	-0.061	0.035	-0.183

7 Mean structure: Indices starting with 'C.' are pairwise comparisons between roles

	factor	estimate	se	z	p.value	ci.lower	ci.upper
1	FE	1.854	0.027	68.029	0.000	1.801	1.908
2	A.C1	0.383	0.038	10.076	0.000	0.308	0.457
3	A.C2	0.149	0.040	3.693	0.000	0.070	0.229
4	A.FA	-0.289	0.033	-8.778	0.000	-0.353	-0.224
5	A.MO	-0.243	0.034	-7.211	0.000	-0.310	-0.177
6	P.C1	0.312	0.038	8.179	0.000	0.237	0.387
7	P.C2	0.151	0.037	4.042	0.000	0.078	0.224
8	P.FA	-0.239	0.036	-6.627	0.000	-0.309	-0.168
9	P.MO	-0.224	0.035	-6.441	0.000	-0.292	-0.156
10	R.C1.C2	0.168	0.040	4.212	0.000	0.090	0.246
11	R.C1.FA	-0.099	0.038	-2.637	0.008	-0.173	-0.025
12	R.C1.MO	-0.069	0.040	-1.734	0.083	-0.147	0.009
13	R.C2.C1	0.276	0.037	7.507	0.000	0.204	0.348
14	R.C2.FA	-0.138	0.035	-3.889	0.000	-0.207	-0.068
15	R.C2.MO	-0.138	0.038	-3.608	0.000	-0.213	-0.063
16	R.FA.C1	-0.117	0.033	-3.588	0.000	-0.181	-0.053
17	R.FA.C2	-0.090	0.035	-2.564	0.010	-0.159	-0.021
18	R.FA.MO	0.207	0.039	5.362	0.000	0.131	0.283
19	R.MO.C1	-0.159	0.034	-4.649	0.000	-0.226	-0.092
20	R.MO.C2	-0.078	0.035	-2.229	0.026	-0.146	-0.009
21	R.MO.FA	0.237	0.035	6.682	0.000	0.167	0.306
8 22	C.means.A.C1.C2	0.233	0.065	3.613	0.000	0.107	0.360
23	C.means.P.C1.C2	0.161	0.059	2.716	0.007	0.045	0.277
24	C.means.A.C1.FA	0.672	0.058	11.671	0.000	0.559	0.785
25	C.means.P.C1.FA	0.551	0.062	8.941	0.000	0.430	0.671
26	C.means.A.C1.MO	0.626	0.060	10.448	0.000	0.509	0.744
27	C.means.P.C1.MO	0.536	0.062	8.611	0.000	0.414	0.658
28	C.means.A.C2.FA	0.438	0.062	7.048	0.000	0.316	0.560
29	C.means.P.C2.FA	0.390	0.063	6.215	0.000	0.267	0.513
30	C.means.A.C2.MO	0.393	0.062	6.362	0.000	0.272	0.514
31	C.means.P.C2.MO	0.375	0.059	6.339	0.000	0.259	0.491
32	C.means.A.FA.MO	-0.045	0.050	-0.916	0.360	-0.143	0.052
33	C.means.P.FA.MO	-0.015	0.053	-0.278	0.781	-0.119	0.089

6 Intragenerational similarities

7 Mean SRM components

8 Pairwise comparisons between the actor (and partner) effects of two roles

Main research question:
Differences in negativity between problematic and nonproblematic families?

- SRM with two indicators
- Two groups
- Differences in variances and means?

Main research question:
Differences in negativity between problematic and nonproblematic families?

- SRM with two indicators
- Two groups
- Differences in variances and means?

```
fSRM.2gr <- fSRM(neg1/neg2 ~ actor.id * partner.id |
                 family.id,
```

Main research question:
Differences in negativity between problematic and nonproblematic families?

- SRM with two indicators
- Two groups
- Differences in variances and means?

```
fSRM.2gr <- fSRM(neg1/neg2 ~ actor.id * partner.id |
                 family.id,
                 data = two.groups, group="group",
```

Main research question:
Differences in negativity between problematic and nonproblematic families?

- SRM with two indicators
- Two groups
- Differences in variances and means?

```
fSRM.2gr <- fSRM(neg1/neg2 ~ actor.id * partner.id |
                 family.id,
                 data = two.groups, group="group",
                 means = T, diff=TRUE)
```

• • •

```
###################################
Difference of means between groups (1-2)
###################################
              component   diff    se      z p.value ci.lower ci.upper
1077      .meanDiff.FE  0.202 0.028  7.182   0.000    0.147    0.257
1078    .meanDiff.A.C1  0.293 0.049  5.998   0.000    0.197    0.388
1079    .meanDiff.A.C2 -0.178 0.053 -3.374   0.001   -0.281   -0.074
1080    .meanDiff.A.FA -0.148 0.043 -3.407   0.001   -0.233   -0.063
1081    .meanDiff.A.MO  0.033 0.043  0.759   0.448   -0.052    0.117
1082    .meanDiff.P.C1  0.284 0.045  6.263   0.000    0.195    0.373
1083    .meanDiff.P.C2 -0.030 0.046 -0.649   0.516   -0.121    0.061
1084    .meanDiff.P.FA -0.020 0.047 -0.413   0.680   -0.112    0.073
1085    .meanDiff.P.MO -0.032 0.046 -0.701   0.483   -0.123    0.058
1086 .meanDiff.R.C1.C2 -0.037 0.047 -0.782   0.434   -0.129    0.056
1087 .meanDiff.R.C1.FA  0.045 0.044  1.030   0.303   -0.041    0.131
1088 .meanDiff.R.C1.MO -0.008 0.046 -0.176   0.860   -0.099    0.083
1089 .meanDiff.R.C2.C1 -0.016 0.047 -0.341   0.733   -0.108    0.076
1090 .meanDiff.R.C2.FA -0.011 0.044 -0.251   0.802   -0.096    0.075
1091 .meanDiff.R.C2.MO  0.027 0.047  0.571   0.568   -0.066    0.120
1092 .meanDiff.R.FA.C1  0.010 0.039  0.259   0.796   -0.067    0.087
1093 .meanDiff.R.FA.C2  0.009 0.042  0.206   0.837   -0.074    0.091
1094 .meanDiff.R.FA.MO -0.019 0.046 -0.408   0.683   -0.109    0.072
1095 .meanDiff.R.MO.C1  0.006 0.042  0.143   0.887   -0.076    0.087
1096 .meanDiff.R.MO.C2  0.028 0.044  0.647   0.518   -0.057    0.114
1097 .meanDiff.R.MO.FA -0.034 0.045 -0.761   0.447   -0.122    0.054


###################################
Difference of variances between groups (1-2)
###################################
              component   diff    se      z p.value ci.lower ci.upper
1098      .varDiff.FE  0.020 0.022  0.917   0.359   -0.023    0.063
1099    .varDiff.A.C1  0.026 0.045  0.567   0.570   -0.063    0.114
1100    .varDiff.A.C2  0.046 0.054  0.850   0.395   -0.060    0.153
1101    .varDiff.A.FA -0.039 0.032 -1.196   0.232   -0.103    0.025
1102    .varDiff.A.MO -0.031 0.034 -0.914   0.361   -0.096    0.035
1103    .varDiff.P.C1  0.057 0.038  1.513   0.130   -0.017    0.132
1104    .varDiff.P.C2  0.023 0.039  0.586   0.558   -0.053    0.099
1105    .varDiff.P.FA  0.014 0.040  0.355   0.722   -0.064    0.092
1106    .varDiff.P.MO -0.056 0.040 -1.410   0.159   -0.133    0.022
1107 .varDiff.R.C1.C2  0.254 0.125  2.028   0.043    0.008    0.500
```

• • •

- Output for each group
- Difference between groups

```
###################################
Difference of means between groups (1-2)
###################################
              component   diff    se      z p.value ci.lower ci.upper
1077      .meanDiff.FE  0.202 0.028  7.182   0.000    0.147    0.257
1078    .meanDiff.A.C1  0.293 0.049  5.998   0.000    0.197    0.388
1079    .meanDiff.A.C2 -0.178 0.053 -3.374   0.001   -0.281   -0.074
1080    .meanDiff.A.FA -0.148 0.043 -3.407   0.001   -0.233   -0.063
1081    .meanDiff.A.MO  0.033 0.043  0.759   0.448   -0.052    0.117
1082    .meanDiff.P.C1  0.284 0.045  6.263   0.000    0.195    0.373
1083    .meanDiff.P.C2 -0.030 0.046 -0.649   0.516   -0.121    0.061
1084    .meanDiff.P.FA -0.020 0.047 -0.413   0.680   -0.112    0.073
1085    .meanDiff.P.MO -0.032 0.046 -0.701   0.483   -0.123    0.058
1086 .meanDiff.R.C1.C2 -0.037 0.047 -0.782   0.434   -0.129    0.056
1087 .meanDiff.R.C1.FA  0.045 0.044  1.030   0.303   -0.041    0.131
1088 .meanDiff.R.C1.MO -0.008 0.046 -0.176   0.860   -0.099    0.083
1089 .meanDiff.R.C2.C1 -0.016 0.047 -0.341   0.733   -0.108    0.076
1090 .meanDiff.R.C2.FA -0.011 0.044 -0.251   0.802   -0.096    0.075
1091 .meanDiff.R.C2.MO  0.027 0.047  0.571   0.568   -0.066    0.120
1092 .meanDiff.R.FA.C1  0.010 0.039  0.259   0.796   -0.067    0.087
1093 .meanDiff.R.FA.C2  0.009 0.042  0.206   0.837   -0.074    0.091
1094 .meanDiff.R.FA.MO -0.019 0.046 -0.408   0.683   -0.109    0.072
1095 .meanDiff.R.MO.C1  0.006 0.042  0.143   0.887   -0.076    0.087
1096 .meanDiff.R.MO.C2  0.028 0.044  0.647   0.518   -0.057    0.114
1097 .meanDiff.R.MO.FA -0.034 0.045 -0.761   0.447   -0.122    0.054

###################################
Difference of variances between groups (1-2)
###################################
              component   diff    se      z p.value ci.lower ci.upper
1098      .varDiff.FE  0.020 0.022  0.917   0.359   -0.023    0.063
1099    .varDiff.A.C1  0.026 0.045  0.567   0.570   -0.063    0.114
1100    .varDiff.A.C2  0.046 0.054  0.850   0.395   -0.060    0.153
1101    .varDiff.A.FA -0.039 0.032 -1.196   0.232   -0.103    0.025
1102    .varDiff.A.MO -0.031 0.034 -0.914   0.361   -0.096    0.035
1103    .varDiff.P.C1  0.057 0.038  1.513   0.130   -0.017    0.132
1104    .varDiff.P.C2  0.023 0.039  0.586   0.558   -0.053    0.099
1105    .varDiff.P.FA  0.014 0.040  0.355   0.722   -0.064    0.092
1106    .varDiff.P.MO -0.056 0.040 -1.410   0.159   -0.133    0.022
1107 .varDiff.R.C1.C2  0.254 0.125  2.028   0.043    0.008    0.500
```

- Output for each group
- Difference between groups
  - More family negativity in problematic families
  - Target adolescent reports more negativity

```
#####################################
Difference of means between groups (1-2)
#####################################
             component   diff    se      z p.value ci.lower ci.upper
1077      .meanDiff.FE  0.202 0.028  7.182   0.000    0.147    0.257
1078    .meanDiff.A.C1  0.293 0.049  5.998   0.000    0.197    0.388
1079    .meanDiff.A.C2 -0.178 0.053 -3.374   0.001   -0.281   -0.074
1080    .meanDiff.A.FA -0.148 0.043 -3.407   0.001   -0.233   -0.063
1081    .meanDiff.A.MO  0.033 0.043  0.759   0.448   -0.052    0.117
1082    .meanDiff.P.C1  0.284 0.045  6.263   0.000    0.195    0.373
1083    .meanDiff.P.C2 -0.030 0.046 -0.649   0.516   -0.121    0.061
1084    .meanDiff.P.FA -0.020 0.047 -0.413   0.680   -0.112    0.073
1085    .meanDiff.P.MO -0.032 0.046 -0.701   0.483   -0.123    0.058
1086 .meanDiff.R.C1.C2 -0.037 0.047 -0.782   0.434   -0.129    0.056
1087 .meanDiff.R.C1.FA  0.045 0.044  1.030   0.303   -0.041    0.131
1088 .meanDiff.R.C1.MO -0.008 0.046 -0.176   0.860   -0.099    0.083
1089 .meanDiff.R.C2.C1 -0.016 0.047 -0.341   0.733   -0.108    0.076
1090 .meanDiff.R.C2.FA -0.011 0.044 -0.251   0.802   -0.096    0.075
1091 .meanDiff.R.C2.MO  0.027 0.047  0.571   0.568   -0.066    0.120
1092 .meanDiff.R.FA.C1  0.010 0.039  0.259   0.796   -0.067    0.087
1093 .meanDiff.R.FA.C2  0.009 0.042  0.206   0.837   -0.074    0.091
1094 .meanDiff.R.FA.MO -0.019 0.046 -0.408   0.683   -0.109    0.072
1095 .meanDiff.R.MO.C1  0.006 0.042  0.143   0.887   -0.076    0.087
1096 .meanDiff.R.MO.C2  0.028 0.044  0.647   0.518   -0.057    0.114
1097 .meanDiff.R.MO.FA -0.034 0.045 -0.761   0.447   -0.122    0.054

#####################################
Difference of variances between groups (1-2)
#####################################
             component   diff    se      z p.value ci.lower ci.upper
1098      .varDiff.FE  0.020 0.022  0.917   0.359   -0.023    0.063
1099    .varDiff.A.C1  0.026 0.045  0.567   0.570   -0.063    0.114
1100    .varDiff.A.C2  0.046 0.054  0.850   0.395   -0.060    0.153
1101    .varDiff.A.FA -0.039 0.032 -1.196   0.232   -0.103    0.025
1102    .varDiff.A.MO -0.031 0.034 -0.914   0.361   -0.096    0.035
1103    .varDiff.P.C1  0.057 0.038  1.513   0.130   -0.017    0.132
1104    .varDiff.P.C2  0.023 0.039  0.586   0.558   -0.053    0.099
1105    .varDiff.P.FA  0.014 0.040  0.355   0.722   -0.064    0.092
1106    .varDiff.P.MO -0.056 0.040 -1.410   0.159   -0.133    0.022
1107 .varDiff.R.C1.C2  0.254 0.125  2.028   0.043    0.008    0.500
```

- Output for each group
- Difference between groups
  - More family negativity in problematic families
  - Target adolescent reports more negativity

Some other features of the package:

- SRM in three person family
  - Specify which component to drop *(default: family factor)*
- Improve model fit
  - Modification indices
  - Fix negative or nonsignificant effects to zero
- Investigate difference over roles same component
- Handle missing data
- Different kind of plots

e.g., Barplot for relative variance decomposition

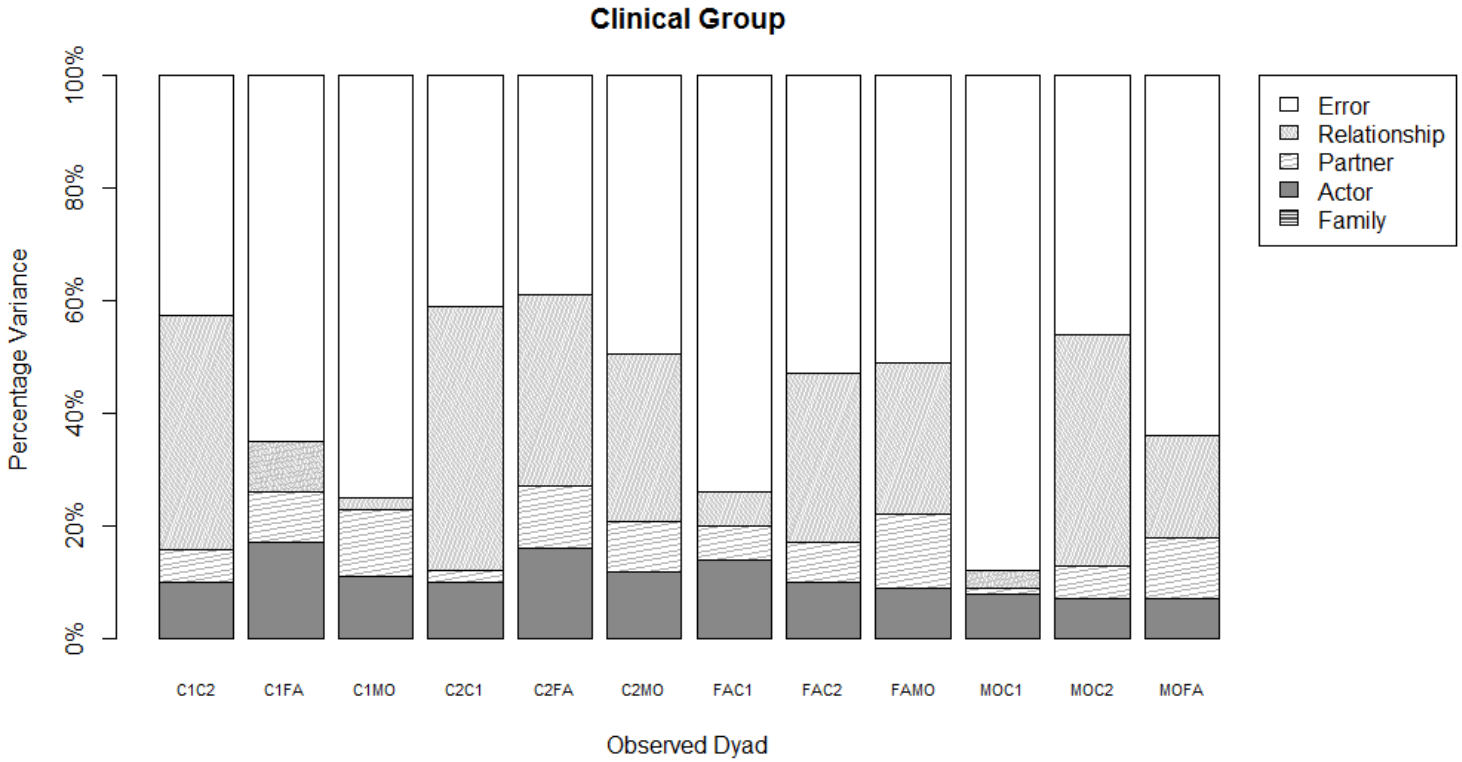

References

Eichelsheim, V. I., Buist, K. L., Dekovic, M., Cook, W. L., Manders, W., & Branje, S. J. T. (2011). Negativity in problematic and nonproblematic families: A multigroup social relations analysis with structured means. *Journal of family psychology, 25*(1), 152-156.

Furman,W., & Buhrmester, D. (1985). Children's perceptions of the personal relationships in their social networks. *Developmental Psychology, 21*, 1016-1024.

Rosseel, Y. (2012). Lavaan: an R package for structural equation modeling. *Journal of Statistical Software, 48*(2), 1-36.

Stas, L., Schönbrodt, F, & Loeys, T. *Getting the most out of family data with the R package fSRM*. Under review.