Kinematic structure and workspace analysis of a parallel kinematic machine based on Lambda mechanism with actuated translation joints

Ljubomir Nešovanović
LOLA Institute
Belgrade, Serbia
ljubomir.nesovanovic@li.rs

Saša Živanović
University of Belgrade, Faculty of Mechanical Engineering
Belgrade, Serbia
szivanovic@mas.bg.ac.rs

Abstract— **This paper presents modeling and analysis of a virtual machine prototype based on Lambda parallel kinematic mechanism with actuated translation joints. Kinematic modeling includes solving inverse kinematic and workspace analysis of the machine. Verification of inverse kinematic equations has been done analytically using MatLab software and a CAD/CAM system, and the workspace analysis is also done analytically using the polar coordinates.**

Keywords-Lambda mechanism, inverse kinematic equations, workspace, CAD/CAM

I. INTRODUCTION

This paper is based on one part of the research presented in [1] and describes a parallel kinematic machine with six degrees of freedom. Parallel kinematic machines have many advantages over serial ones, but one of the biggest problems is a deficient ratio between machine space and workspace [2]. This paper presents one way to achieve the workspace of a parallel kinematic machine. Before analyzing the workspace, it is essential to form the proper mathematical model of the machine.

The main characteristic of the analyzed machine is the Lambda mechanism, on which the machine is based. The first one to use the Lambda configuration was Stewart [3], and the interpreted machine is established on this research. Many ideas of parallel kinematic machines are based on the Lambda mechanism [4-6] and actuated, constant length translation joints are characteristic for all of them, including the machine proposed in this paper. Parallel kinematic machines based on the Lambda mechanism may have two to six degrees of freedom. The machine based on just one Lambda mechanism has two degrees of freedom and can be upgraded to the hybrid mechanism with four degrees of freedom [4]. Same as the machine presented in [5], the parallel kinematic machine proposed in this paper has three Lambda mechanisms and can acquire six degrees of freedom. The machine shown in [6] has four degrees of freedom enabled using three Lambda mechanisms with some limitations. The machine presented in [7], as the machine proposed in this paper, has six degrees of freedom achieved using six kinematic chains, whilst two chains are connected to the same shaft using the translation joints. Differences between the proposed machine and the machine presented in [7] are in length and connection of kinematic chains.

The concept of a parallel kinematic machine based on Lambda mechanism with actuated translation joints, the kinematic structure analysis, and inverse kinematic equations are presented below. This paper also presents the verification of inverse kinematic equations and workspace analysis.

II. THE CONCEPT OF A PARALLEL KINEMATIC MACHINE BASED ON THE LAMBDA MECHANISM

The machine analyzed in this paper consists of a stationary base and a moving platform connected with three independent Lambda mechanisms (Fig. 1). Each Lambda mechanism is defined by two kinematic chains, one longer than another, connected with one rotary joint. Therefore, the machine has six kinematic chains.

Before mathematical analysis, it is necessary to define the design of the Lambda mechanism correctly. The specific position of kinematic chains, their structure, and the type of used joints of the Lambda mechanism are shown in Fig. 2.

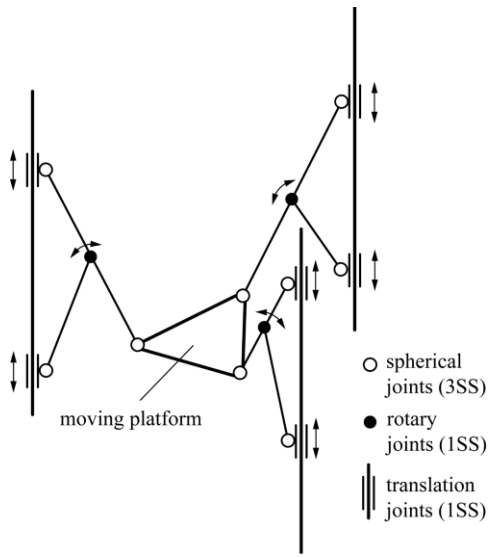

Figure 1. The kinematic model of the machine

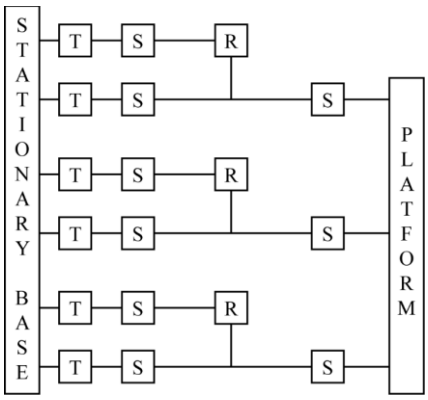

Figure 2. Graph diagram

Actuated translation joints are positioned on the stationary base. One of the characteristics of the analyzed machine are two translation joints positioned on the same shaft on the stationary base. Each Lambda mechanism is connected with two translation joints on the same shaft on the stationary base, using the spherical joint. The connection between each Lambda mechanism and the moving platform is provided by one spherical joint. As previously said, the Lambda mechanism is defined by two kinematic chains, one longer than another. The rotary connection between the two chains is provided by connecting one side of the smaller kinematic chain to the body of the longer one.

It is crucial to say that the presented machine has three types of joints. The spherical joints offer three degrees of freedom (3 DOF), and every degree of freedom provides rotation around one of the three perpendicular axes. The rotary joints provide one degree of freedom (1 DOF) for rotation around defined axes. The translation joints provide one degree of freedom (1 DOF) for translation in a direction of the required axis. The only actuated joints of the machine are translation joints, and the others are passive joints. For better understanding of the presented machine, graph diagram is shown on Fig. 2.

III. THE KINEMATIC STRUCTURE ANALYSIS OF THE PROPOSED MACHINE

Before analyzing the workspace and optimizing the machine parameters, it is necessary to form a proper mathematical model of the kinematic structure. The proper representation of the kinematic structure of the machine are inverse kinematic equations. For achieving inverse kinematic equations, it is necessary to solve the inverse kinematic problem. Solving the inverse kinematic problem (IKP) means transforming the moving platform's position and orientation vector into the active-joint variables [8].

The machine analyzed in this paper has six independent kinematic chains (Fig. 3), and every chain is connected to the actuated translation joint. The position of every translation joint on the shaft directs the position and orientation of the moving platform. Consequently, the active-joint variable of this machine is the position of the translation joint on the shaft. The vector of every active-joint variable is:

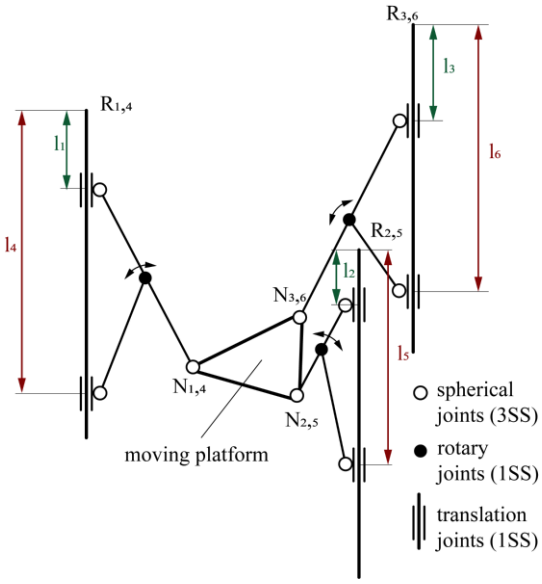

Figure 3. The kinematic model with active-joint positions

$$\mathbf{l} = \begin{bmatrix} l_1 \\ l_2 \\ \vdots \\ l_6 \end{bmatrix}. \tag{1}$$

The first three elements of the vector are the variables that describe the position of translation joints connected to the longer kinematic chains of the Lambda mechanism. The moving platform's position and orientation vector

$$\mathbf{x_e}=[p_x,\ p_y,\ p_z,\ \Psi,\ \theta,\ \Phi]^T \tag{2}$$

is given for inverse kinematic equation solving [8]. The value of the machine parameters is also given. The machine parameters are the stationary base dimension (C), the moving platform dimension (D), the dimension of longer kinematic chains (c_i), the dimension of smaller kinematic chains (u_i), and the dimension between kinematic chain connection (of Lambda mechanism) and platform (r_i).

In this case, geometric methods solve the inverse kinematic problem. It is necessary for the machine with six active-joints to create six equations. The starting point was creating a vector equation that could connect the zero position point of the active-joint on the stationary base (R) and the corresponding point on the moving platform (N). Vectors used in mathematical derivations are platform position vector (${}^{\mathbf{B}}\mathbf{p}_{\mathbf{Op}}$), joint position on the platform vector (${}^{\mathbf{P}}\mathbf{p}_{\mathbf{Ni}}$), joint position on the base vector (${}^{\mathbf{B}}\mathbf{p}_{\mathbf{Ri}}$), the direction of the actuated joint vector (${}^{\mathbf{B}}\mathbf{a}_{\mathbf{i}}$), and unit vectors of orientation (${}^{\mathbf{B}}\mathbf{w}_{\mathbf{i}}, {}^{\mathbf{B}}\mathbf{z}_{\mathbf{i}}, {}^{\mathbf{B}}\mathbf{q}_{\mathbf{i}}$). Fig. 4 shows that the connection between the N point on the stationary base and the R point on the moving platform (k_i) can be described with three vector equations [9]:

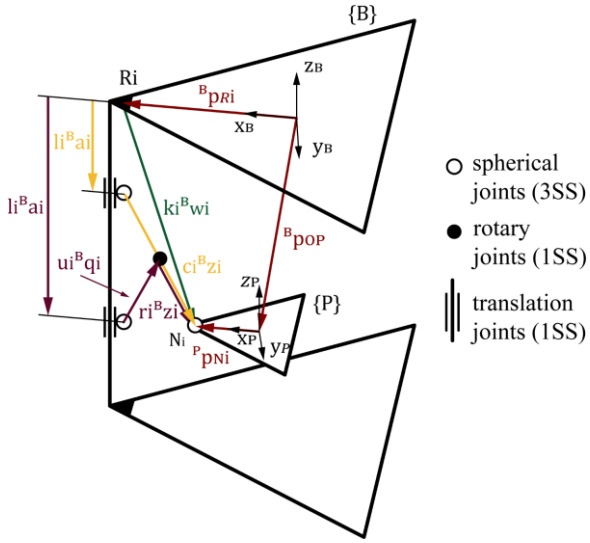

Figure 4. The kinematic model with required vectors

$$k_i\,{}^{B}\mathbf{w_i} = {}^{B}\mathbf{p_{O_P}} + {}^{B}_{P}R\cdot{}^{P}\mathbf{p_{N_i}} - {}^{B}\mathbf{p_{R_i}} \quad (i=1,2,\ldots,6), \tag{3}$$

$$k_i\,{}^{B}\mathbf{w_i} = l_i\,{}^{B}\mathbf{a_i} + c_i\,{}^{B}\mathbf{z_i} \quad (i=1,2,3), \tag{4}$$

$$k_i\,{}^{B}\mathbf{w_i} = l_i\,{}^{B}\mathbf{a_i} + u_i\,{}^{B}\mathbf{q_i} + r_i\,{}^{B}\mathbf{z_i} \quad (i=4,5,6). \tag{5}$$

The equation (1) can be used for solving all six equations. Equation (2) is reserved for finding the result of the first three active-joint variables. Equation (3) can solve equations connected to the last three active-joint variables. This equation presents a starting point for solving the inverse kinematic problem. After mathematical derivation, the solution of the inverse kinematic problem is presented with six equations for every active-joint variable [1]:

$$l_1 = \left(-z_p + D\cdot s\theta\right) - \sqrt{\left(-z_p + D\cdot s\theta\right)^2 - (k_1^2 - c_1^2)}, \tag{4}$$

$$l_2 = \left(-z_p - \frac{1}{2}D\cdot s\theta + \frac{\sqrt{3}}{2}D\cdot c\theta\cdot s\Psi\right) - \sqrt{\left(-z_p - \frac{1}{2}D\cdot s\theta + \frac{\sqrt{3}}{2}D\cdot c\theta\cdot s\Psi\right)^2 - (k_2^2 - c_2^2)}, \tag{5}$$

$$l_3 = \left(-z_p - \frac{1}{2}D\cdot s\theta - \frac{\sqrt{3}}{2}D\cdot c\theta\cdot s\Psi\right) - \sqrt{\left(-z_p - \frac{1}{2}D\cdot s\theta - \frac{\sqrt{3}}{2}D\cdot c\theta\cdot s\Psi\right)^2 - \left(k_3^2 - c_3^2\right)}, \tag{6}$$

$$l_4 = l_1 + {}^{B}\mathbf{a_4}\cdot(c_1 - r_4)\cdot{}^{B}\mathbf{z_4} + \sqrt{\left({}^{B}\mathbf{a_4}\cdot(c_1 - r_4)\cdot{}^{B}\mathbf{z_4}\right)^2 - \left((c_1 - r_4)^2 - u_4^2\right)}, \tag{7}$$

$$l_5 = l_2 + {}^{B}\mathbf{a_5}\cdot(c_2 - r_5)\cdot{}^{B}\mathbf{z_5} + \sqrt{\left({}^{B}\mathbf{a_5}\cdot(c_2 - r_5)\cdot{}^{B}\mathbf{z_5}\right)^2 - \left((c_2 - r_5)^2 - u_5^2\right)}, \tag{8}$$

$$l_6 = l_3 + {}^{B}\mathbf{a_6}\cdot(c_3 - r_6)\cdot{}^{B}\mathbf{z_6} + \sqrt{\left({}^{B}\mathbf{a_6}\cdot(c_3 - r_6)\cdot{}^{B}\mathbf{z_6}\right)^2 - \left((c_3 - r_6)^2 - u_6^2\right)}. \tag{9}$$

IV. Verification of the Inverse Kinematic Equations

Verifying the inverse kinematic equations on a virtual prototype is vital before using equations (4)-(9) in workspace analysis. The inverse kinematic equations have been verified using two softwares, MatLab and PTC Creo Parametric. Usage of PTC Creo Parametric has created a simplified CAD model of the machine, and MatLab software has been used to find the most effective solution of the inverse kinematic equations.

The important measurements are done on a virtual model using PTC Creo software (Figs. 5 and 6). Dimensions required from the model were parameters of the machine and the moving platform position and orientation vector. The starting point for all measurements is defining the proper coordinate systems of the stationary base (IKP) and the moving platform (TP). The stationary base coordinate system is presented as a zero vector and presents a starting point for every analysis. The coordinate system of the platform represents the platform's position and orientation. Software PTC Creo Parametric generated a measurement tool to provide the transformation matrix that has all the necessary information about the platform's position and orientation (Fig. 5). After measurement, the required dimensions are imported into the MatLab program. The product of the created program are the active-joint variables. The active-joint variable can be measured on the virtual prototype of the machine (Fig. 5). The measured dimension between every translation joint and XY plane of the stationary base's coordinate system presents an active-joint variable.

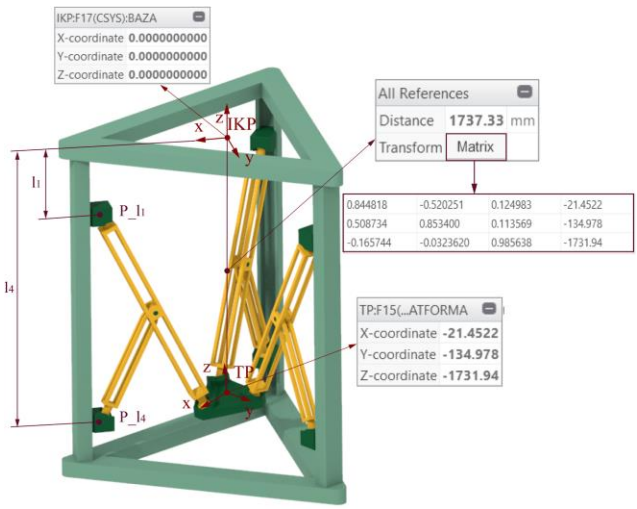

Figure 5. The measuremant's on CAD model

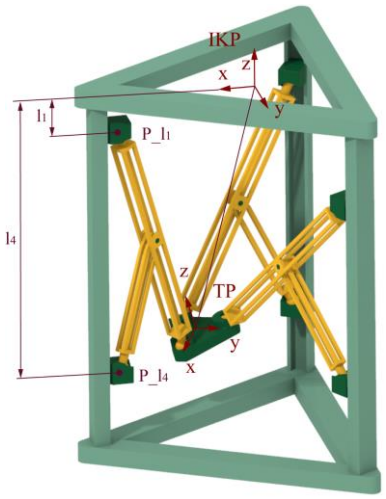

Figure 6. Second measuring experiment

Evaluation of inverse kinematic equations is done by comparing the active-joint variable measured on a virtual model and generated using the MatLab program. This comparison is made for two different positions of the moving platform. The first position of the platform shown in Fig. 5 is used for experiment 1, while the platform position shown in Fig. 6 is used for experiment 2. Comparing both ways generated active-joint variables confirms inverse kinematic equations (Tab. 1).

The difference between the active-joint variable measured on a CAD model and generated using the computer program shown in Tab. 1 results from multiple conversions and measurement errors. Proposed inverse kinematic equations accuracy is proven, and offered equations can be used in future machine analysis.

TABLE I. COMPARISON OF BOTH WAYS GENERATED ACTIVE-JOINT VARIABLES

	Experiment 1		Experiment 2	
Active-joint variable	CAD model [mm]:	MatLab code [mm]:	CAD model [mm]:	MatLab code [mm]:
l_1	398.89	398.88	164.59	164.60
l_2	299.68	299.67	223.16	223.16
l_3	414.67	414.66	467.37	467.37
l_4	1758.75	1758.73	1587.58	1587.59
l_5	1714.02	1714.01	1565.02	1565.03
l_6	1723.08	1723.07	1514.00	1514.00

V. WORKSPACE ANALYSIS

Workspace is one of the most important parameters in machine tool design. For parallel kinematic machine tools, workspace is usually a weak point of the machine design and presents the vital parameter. Because of this characteristic, workspace analysis is often a starting point for machine designing. Some of the main dimensions of the machine can be generated from the workspace analysis, and the workspace can have different shapes and sizes depending on the machine's design.

This paper presents the analysis of achievable workspace. The achievable workspace is the machine's workspace whose end-effector can touch every workspace point in every orientation [10]. The provided machine parameters are the stationary base's dimension, the moving platform's dimension, and the dimensions of the kinematic chains. The machine parameters used for workspace analysis are adopted for regular size machine tools and implemented in simplified CAD model of the machine. The exact value of every parameter is shown in [1].

Because of the specific machine design, it is difficult or even impossible to generate the machine's workspace geometrically. In this case, the analytical method based on the computer code programmed in MatLab software is used for obtaining the workspace. Created code is acquired on the algorithm shown in Fig. 7.

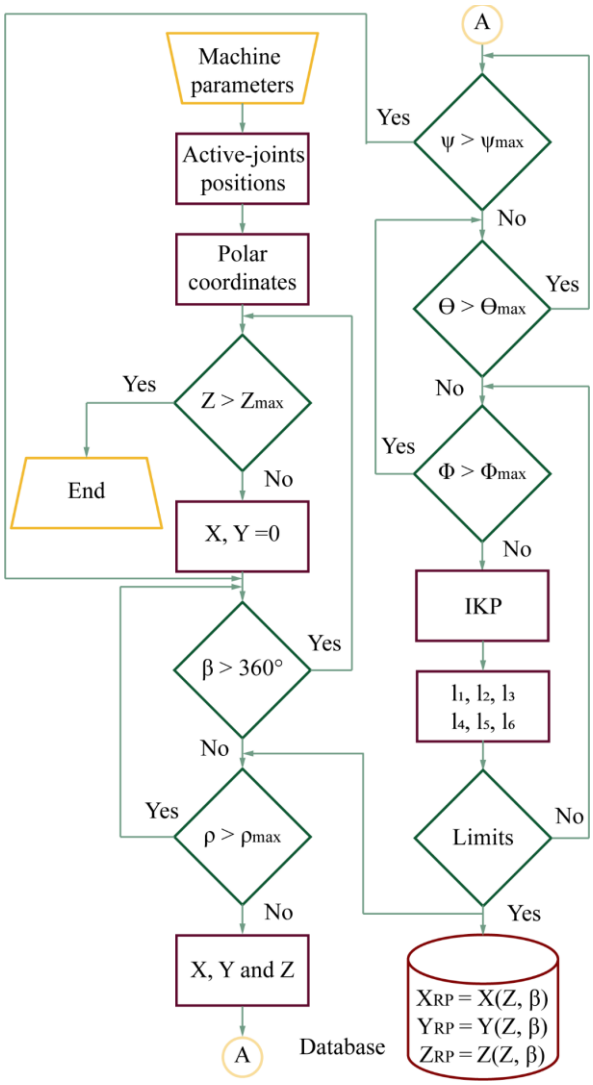

Figure 7. Block diagram for workspace analysis

As previously said, analyzed machine has six degrees of freedom and, intuitively, the workspace is tridimensional. Because of the specific kinematics, workspace of the machine has no regular design. In this case, polar coordinates (z, ρ, β) are used for workspace analysis. The first step for finding the workspace design is to divide the workspace with planes perpendicular to height (z). After splitting, all analyses are done on each plane of the divided workspace. The starting position for analysis of each plain is zero value of polar coordinates (ρ and β). The first polar coordinate (ρ) presents the axial distance between the z-axis and desired point, and the second polar coordinate (β) is the angle from the positive x-axis to the first polar coordinate.

After defining all values of polar coordinates, it is necessary to convert polar coordinates to the cartesian coordinates (x, y, z). This conversion uses the inverse kinematics equations and required limits to verify the defined point possible to achieve in any end-effector orientation. The first step in this procedure is to find the first height that can be reached with the end-effector. The second step is to raise the value of polar coordinate ρ iteratively and, after every raise, to convert polar coordinates to cartesian coordinates and verify them. The first point that does not come through verification is dismissed, and the polar coordinate β rises value, while the polar coordinate ρ is set to value zero. The variable used for raising the value of polar coordinates is a given constant.

The shape and size of the workspace analyzed on plain defined by height (z) is completed, after achieving the total circle value with polar coordinate β, by connecting the points with a high value of polar coordinate ρ for every polar coordinate β (Fig. 8). Process is iteratively repeated for every plain defined by height. The machine's workspace is shown in Fig. 9 and it presents the analyzed planes, whilst every plain is connected. The presented workspace has a specific shape because of the required limits of the active-joint variables. The value of the defined limits is set using the geometry to avoid the collision of active machine parts.

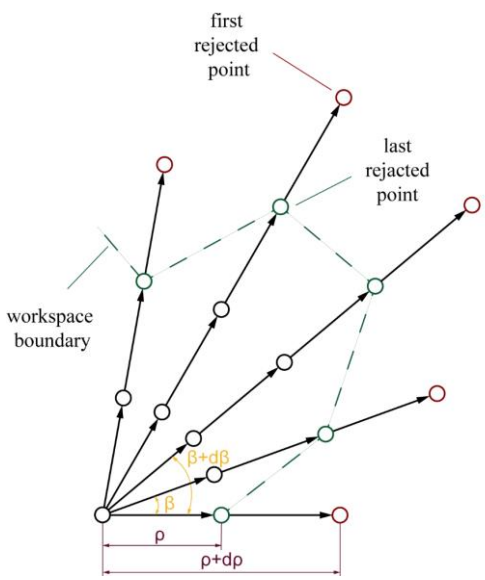

Figure 8. The workspace analysis

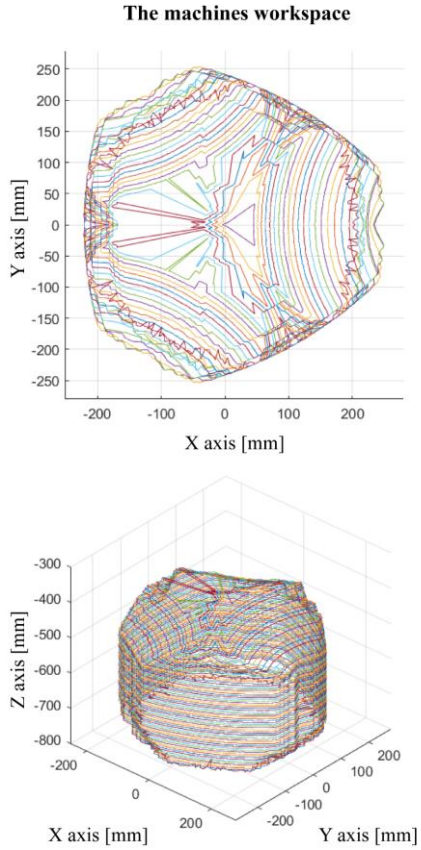

Figure 9. The machines workspace

VI. CONCLUSION

The main results established in this paper are inverse kinematic equations generated from the geometric model of the machine and workspace analysis. These shown results are helpful for better understanding of the proposed machine.

Derived inverse kinematic equations with given input parameters can generate the active joint variables – the positions of the active translation joints on the shaft. With inverse kinematic equations, it is possible to develop the proper workspace of the parallel kinematic machine. Before using the inverse kinematic equations in the workspace analysis, it is crucial to verify them. The verification is done by using PTC Creo Parametric and Matlab software. Comparison of active-joint variables generated with these two software has confirmed the accuracy of the inverse equations.

The established workspace has a complex tridimensional shape, and the characteristic structure of the machine can explain the complex design of the workspace. Presented workspace analysis is based on the polar coordinates, because polar coordinates may offer many advantages in the geometrical analysis of the tridimensional workspace of the machine.

The workspace analysis can help define the dimensions of the machine's active elements and the dimension of passive components. This characteristic can help optimize the whole size of the machine.

Future research may possess the optimization of workspace based on changing the parameters of the machine. Optimized workspaces can show proper directions for the usage of the machine.

ACKNOWLEDGMENT

The presented research was supported by the Ministry of Education, Science and Technological Development of the Republic of Serbia by contract no. 451-03-9/2021-14/200105 dated 5 February 2021 and by contract 451-03-9/2021-14/200066 dated 28 January 2021.

REFERENCES

[1] Lj. Nešovanović, "Machine tool configuration based on Lambda parallel kinematic mechanism with actuated translation joints", The Master's degree final project, University of Belgrade, Faculty of Mechanical Engineering, 2021, (in Serbian).

[2] T. Boye and G. Pritschow, "New Transformation and Analzsis of a N-DOF LINAPOD with six struts for higher accuracy", Robotica, Cambrige University Press, 2005, volume 23, pp. 555-560.

[3] D. Stewart, "A platform with 6 degrees of freedom", Proceeding of the Institution of mechanical engineers, London, U.K., 180, 1965, pp. 371-386.

[4] KIN_TYP_21–Lambda kinematics, https://www.isg-stuttgart.de/kernel-html5/en-GB/292699915.html, 9.9.2021.

[5] A. Verl, N. Croon, C. Kramer, and T. Garber, "Force Free Add-on Position Measurement Device for the TCP of Parallel Kinematic Manipuators", Annals of the CIRP Vol. 55, Stuttgart, Germany, 2006.

[6] A. Acuta, O. Company, F. Pierrot, "Design of Lambda-quadriglide, a new 4-dof parallel kinematic mechanism for schonfilies motion", IDETC/CIE, Montreal, Quebec, Canada, 2010.

[7] G. Pritschow, C. Eppler, T. Garbet, "Influence of the dynamic stiffness on the accuracy of PKM", Paralel kinematics seminar, 2002, University of Stuttgart, Germany.

[8] D. Milutinović, "AT-4: Manipulator kinematics, Industrial robots – lecture manuscript's, University of Belgrade, Faculty of Mechanical Engineering, 2019 (in Serbian).

[9] D. Milutinović, "AN-5 i AN-6: Parallel kinematic machines, Machine tools and robots of the new generation – lecture manuscript's, University of Belgrade, Faculty of Mechanical Engineering, 2012 (in Serbian).

[10] D. Milutinović, "AT-1: Definition, functional structure, and classification of industrial robots; Kinematic structure of robots – manipulators, Industrial robots – lecture manuscript's, University of Belgrade, Faculty of Mechanical Engineering, 2019 (in Serbian).