Chapter

State-of-the-Art on the Marine Current Turbine System Faults

Sana Toumi, Mohamed Benbouzid and Mohamed Faouzi Mimouni

Abstract

This chapter deals with the state of the art on the marine current turbine (MCT) system faults. Indeed, the MCT structure consists of a marine turbine, a generator (permanent magnet synchronous generator (PMSG) or doubly fed induction generator (DFIG)), and a PWM power converter. Nevertheless, these systems are exposed to functional and environmental severe conditions. Firstly, the power increase leads to a higher current and/or voltage. Second, the installation of the MCT system under the sea and the existence of the swell and wave imply harmonic current speeds. In fact, several faults (related to the turbine, the generator, the blades, and the converters) can occur in the MCT system. Most of these faults generate the speed and the torque oscillations, which can lead to mechanical vibrations and the rapid destruction of the insulating material generator. Consequently, MCT system performances can be degraded.

Keywords: marine current turbine, permanent magnet synchronous generator, doubly fed induction generator, converter, faults

1. Introduction

Today, the use of the marine current turbine, shown in **Figure 1**, has a great importance in the electrical energy production. Nevertheless, these systems are exposed to functional and environmental severe conditions. Indeed, different faults can exist in these systems, whether on the turbine marine, on the generator, or on the converters [1]. Therefore, the detection of the MCT faults becomes essential in order to minimize the maintenance cost and ensure the continuity of the electricity production.

Moreover, permanent magnet synchronous machines or doubly fed induction generators can be used for MCT systems [2, 3]. Thus, the existence of any fault can lead to an abnormal behavior of the machine and its accelerated aging process [4]. The main faults of permanent magnet synchronous machines can be summarized in two main categories; stator faults (short-circuit between turns, short circuit between phase and neutral, and short-circuit between phases) and rotor faults (magnets (for the PMSG), eccentricity, and rotor windings faults) [5].

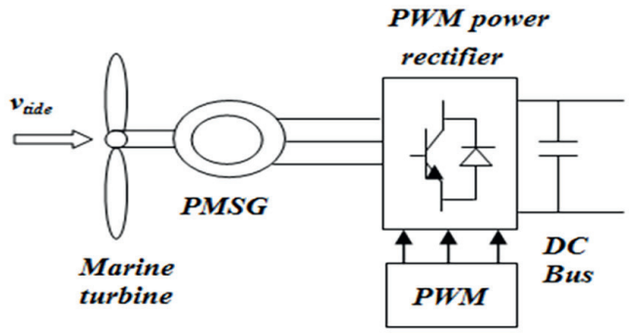

Figure 1.
An off-grid marine current turbine structure.

Furthermore, various studies have presented that 70% of converter faults are related to power switches [6, 7]. Indeed, insulated gate bipolar transistors (IGBTs) are rugged, but, because of electrical stress and excess thermal, they suffer from failure. Converters faults can be, generally, divided into intermittent gate misfiring faults, open-circuit faults, and short-circuit faults. Thus, these faults must be taken into account; otherwise, they can lead to the whole system's performance degradation [8, 9].

This chapter describes the different faults that can be occurring in the marine current turbine system. It is composed as follows; in Section 2, marine turbine faults are described. In Section 3, generator faults and their factors are represented. In Section 4, different types of converter faults are described. The conclusion is given in Section 5.

2. Marine turbine faults

Marine turbine faults are mainly located at the blades. Indeed, seawater salinity causes the corrosion and the rusting of the blades (**Figure 2**). This requires regular maintenance and the use of a high-performance anti-rust coating. Also, the presence of algae around the blades can also damage the marine turbine.

Figure 2.
Marine turbine fault.

3. Generator faults

For MCT configuration, both the permanent magnet synchronous generator and the doubly-fed induction generator have been used. **Table 1** gives the advantages and disadvantages of every generator.

3.1 Stator faults

Stator faults are due to different factors.

- Thermal factors

For a nominal temperature, the insulating material that covers conductors has a well-defined lifespan. Because of a voltage variation or a repetition of starts in a very short time, the temperature can increase and exceed the nominal operating temperature, which leads to the insulating material life reduction [10].

- Electrical factors

The dielectric properties of the insulating material can be contaminated by foreign things (fats, dust, …), which can cause a small current discharge that leads to a short circuit between conductors and magnetic carcasses.

- Mechanical origins

Repetitive starts of the machine cause the temperature rise, which leads to the insulation dilation. This could generate breaks in the insulation that implies a short circuit fault [10].

- Environmental origin

In general, humidity and the presence of chemicals in ambient air can degrade the insulating material quality and affect its lifespan [11].

The main faults of the stator are given by (**Figure 3**); short-circuit between turns (a), short circuit between phase and neutral (b), and short-circuit between phases (c) [12]. These faults generate a disturbance in the spatial distribution of the rotating

Type	Advantages	Disadvantages
PMSG	• Full speed range • Possibility to avoid gearbox (direct drive) • Complete control of reactive and active power	• Full-scale power converter • Low-speed generator (big and heavy) • Permanent magnets needed
DFIG	• Limited speed range (±30% around synchronous speed) • Low-cost small capacity PWM inverter • Complete control of reactive and active power	• Need slip rings • Need for gear

Table 1.
Generator topologies comparison.

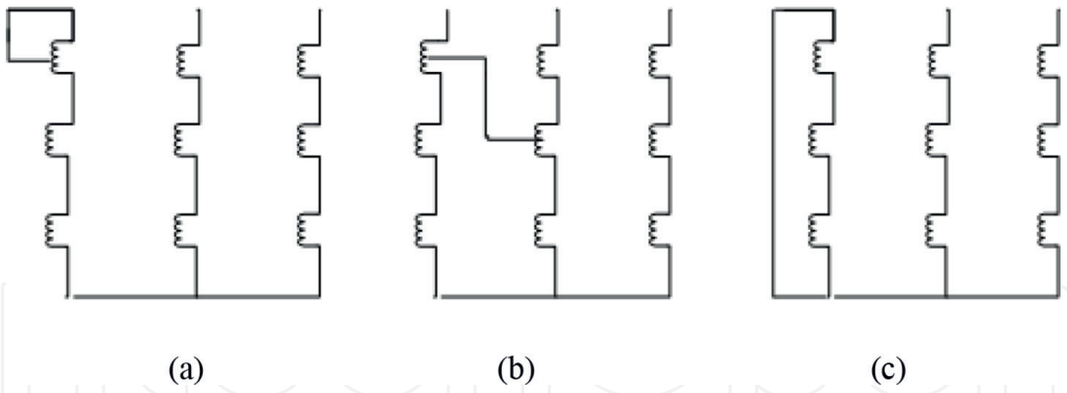

Figure 3.
Different short-circuit faults in the stator.

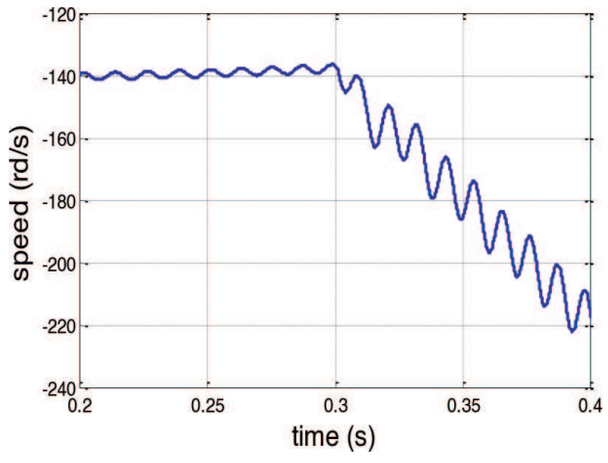

Figure 4.
Speed curve before and after fault.

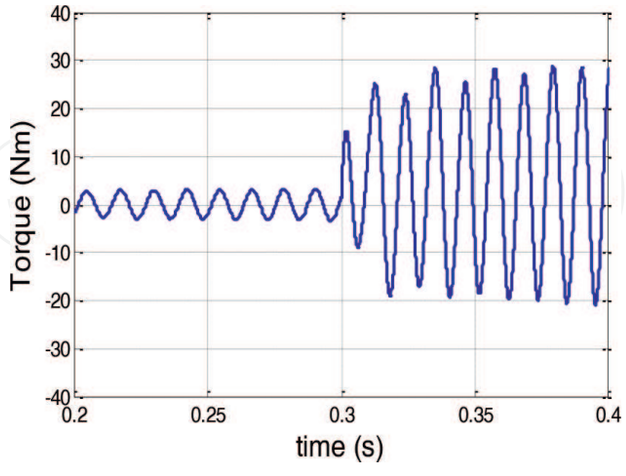

Figure 5.
Torque curve before and after fault.

field. This causes, first of all, the electromagnetic torque and the speed oscillations (**Figures 4** and **5**, respectively), which lead to mechanical vibrations. Moreover, the short-circuit current with important values can lead to the rapid destruction of the insulating material (**Figure 6**) [13, 14].

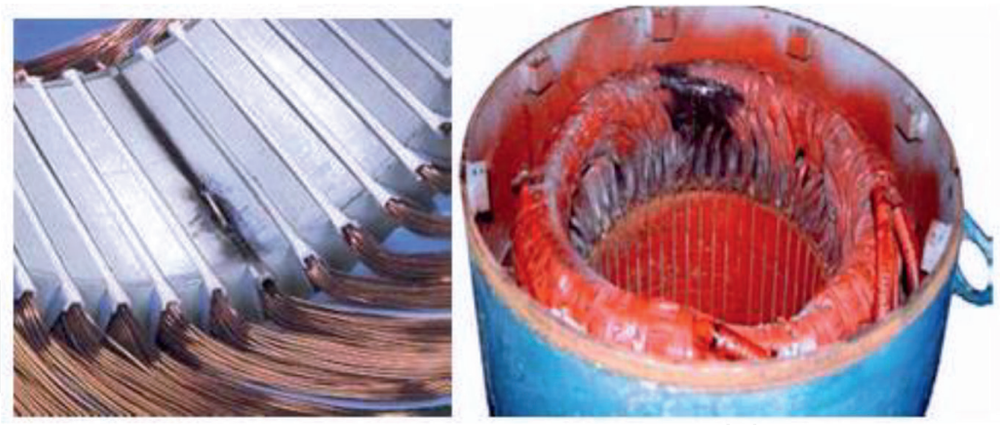

Figure 6.
Insulating material destruction.

3.2 Rotor faults

- Rotor winding faults

These faults present between 42 and 50% of all rotor failures in electrical machines. It can generate noise, mechanical vibrations, and the bearing wear rise. Moreover, winding faults are 12 times more frequent in inverter-powered machines than in those powered directly by the grid [14].

- Eccentricity

The stator and the rotor, for an electrical machine in healthy conditions, have the same rotation axis (same center) (**Figure 7**). Eccentricity is defined as an unsymmetrical air gap between the rotor and the stator. It can be static or dynamic.

For the static eccentricity, the stator and the rotor centers are different (**Figure 8**), however, the rotor always turns around its axis. The main cause of static eccentricity is the incorrect position of the stator and the rotor [15].

In the case of dynamic eccentricity, the rotor does not turn around its axis of rotation where there is an unbalance as shown in **Figure 9**. The main cause of the dynamic eccentricity is the mechanical resonances at critical speed [16] that leads to the electromagnetic forces increase.

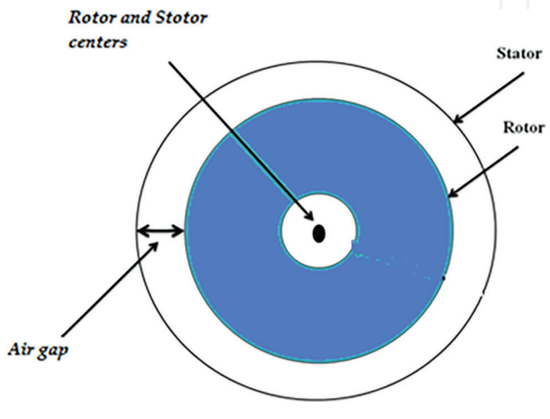

Figure 7.
Stator and rotor in healthy conditions.

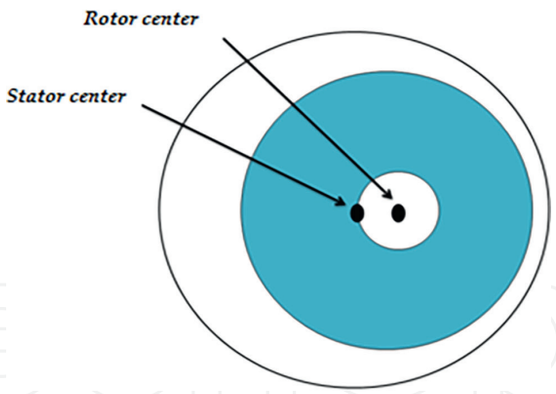

Figure 8.
Static eccentricity.

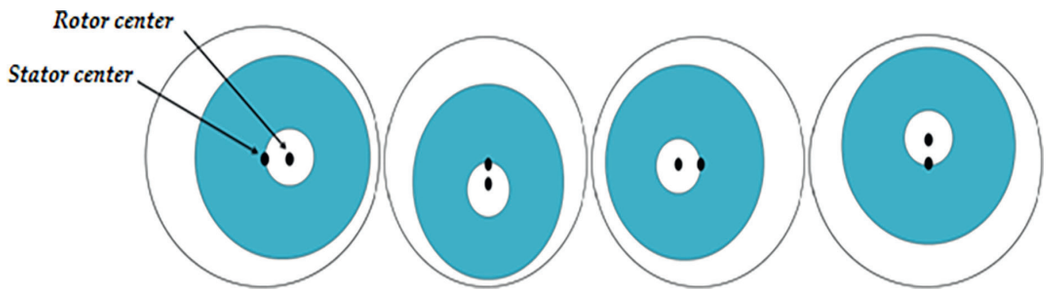

Figure 9.
Dynamic eccentricity.

4. Converter faults

As shown in **Figure 10**, the MCT converter consists of three legs. Each leg is composed of two semiconductor switches (T_k, Tk_{+3} k = 1, 2, 3) and two freewheeling diodes (D_k, Dk_{+3}). For the switches control, a PWM bloc based on logic control signals S_k (k = 1, 2, 3) is used, and it is expressed by:

$$S_k = \begin{cases} 1 \; if \; T_k on \; and \; T_{k+3} \; off \\ 0 \; if \; T_{k+3} on \; and \; T_k \; off \end{cases} \tag{1}$$

Most converter faults are short-circuit and open-circuit faults.

4.1 Open-circuit fault

IGBT's open-circuit faults are, generally, caused by the loss of bonding wires of the control signal or the transistor rupture by a short-circuit [17]. Furthermore, this fault can occur when the switches are destructed by an accidental overcurrent or a fuse connected with series for short protection is blown out. It can arise on the upper switch (**Figure 11a**), the lower switch (**Figure 11b**), or even the two switches at the same time (**Figure 11c**).

Following this fault, the converter cannot synthesize balanced output voltages, thus providing large torque ripple (**Figure 12**) and increasing speed harmonics distortion (**Figure 13**) [18].

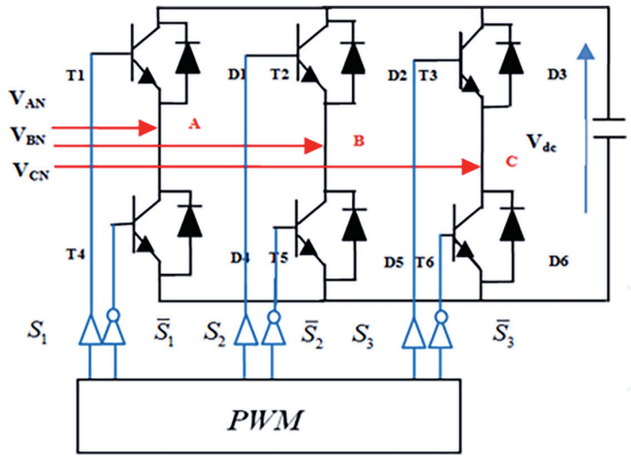

Figure 10.
Converter topology.

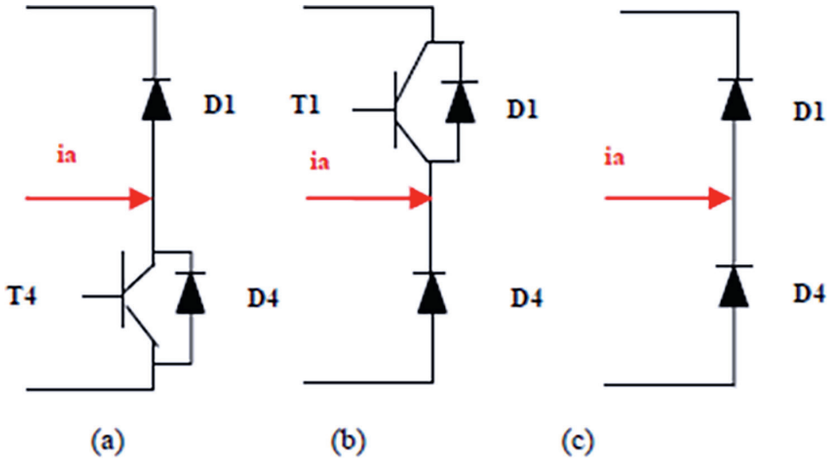

Figure 11.
Open-circuit fault.

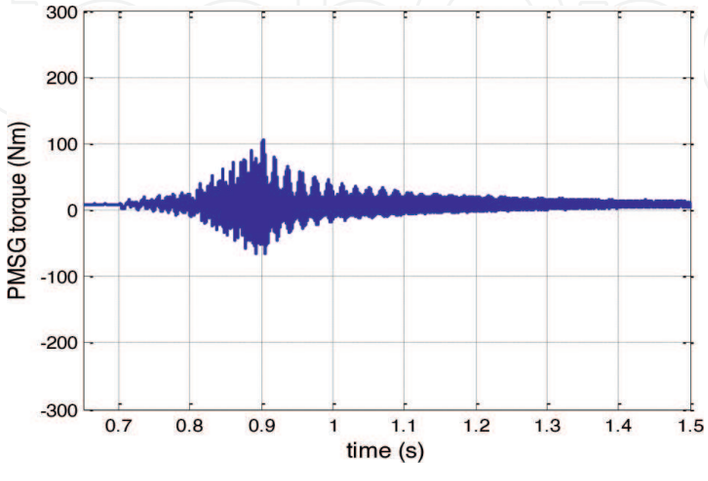

Figure 12.
Torque curve.

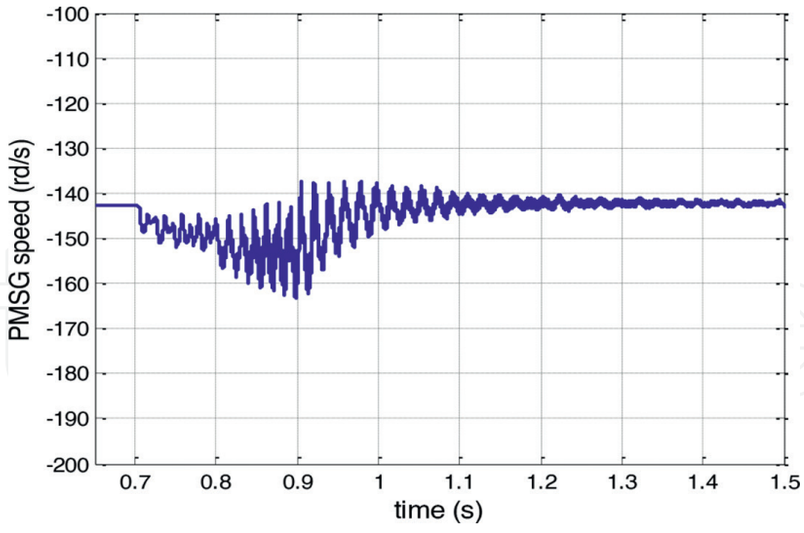

Figure 13.
Speed curve.

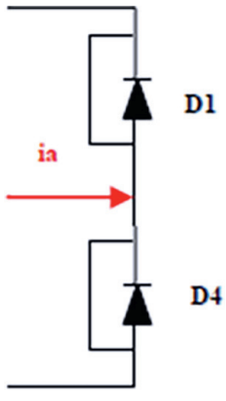

Figure 14.
Short-circuit fault.

4.2 Short-circuit fault

In this case, the fault transistor current increases. When this fault is applied to the whole leg, this latter becomes definitively short-circuited (**Figure 14**). The phase currents become strongly unbalanced and their amplitudes can reach several times that of the currents in normal operation. This not only causes very high torque ripples but can also damage other converter components. In addition, the short-circuit current can result in significant amplitudes.

5. Conclusion

This chapter presents the different faults that can occur in the marine current turbine system, either on the turbine, the machine, or the converter. In this contest, these faults have been analyzed and described by giving each one its impact on the MCT behavior. In fact, Currents, voltages, torque, and speed have been attacked by strong ripples, which lead to the degradation of the MCT performances. Thus, the above-presented study should be useful for the design of advanced robust control techniques in order to correct the effects of the faults and improve the MCT performances.

Author details

Sana Toumi[1,2]*, Mohamed Benbouzid[2,3] and Mohamed Faouzi Mimouni[1]

1 Laboratory of Automation, Electrical Systems and Environment (LASEE), University of Monastir, Monastir, Tunisia

2 University of Brest, Brest, France

3 Shanghai Maritime University, Shanghai, China

*Address all correspondence to: sanaatoumii@gmail.com

References

[1] Toumi S, Elbouchikhi E, Amirat Y, Benbouzid MEH, Feld G. Magnet failure-resilient control of a direct-drive tidal turbine. Ocean Engineering. 2019;**187**:106207

[2] Zhou Z, Scuiller F, Charpentier JF, Benbouzid MEH, Tang T. Grid-connected marine current generation system power smoothing control using supercapacitors. In: Proceedings of the IEEE Annual Conference on IEEE Industrial Electronics Society (IECON'38); 25-28 October 2012. Montreal, Canada: IEEE; 2012. pp. 1-6

[3] Bachir S, Tnani S, Trigeassou JC, Champenois G. Diagnosis by parameter estimation of stator and rotor faults occurring in induction machines. IEEE Transactions on Industrial Electronics. 2006;**53**:963-973

[4] Awadallah MA, Morcos MM, Gopalakrishnan S, Nehl TW. Detection of stator short circuits in VSI-Fed Brushless DC motors using wavelet transform. IEEE Transactions on Energy Conversion. 2006;**21**:1-8

[5] Toumi S, Amirat Y, Elbouchikhi E, Trabelsi M, Benbouzid MEH, Mimouni MF. A simplified mathematical approach for magnet defects modeling in PMSG-based marine current turbine. In: Proceedings of the IEEE International Conference on Sciences and Techniques of Automatic Control and and Computer Engineering (STA'17); 19-21 December 2016. Sousse, Tunisia: IEEE; 2016. pp. 552-557

[6] Toumi S, Amirat Y, Elbouchikhi E, Trabelsi M, Benbouzid MEH, Mimouni MF. A comparison of fault-tolerant control strategies for a PMSG-based marine current turbine system under converter faulty conditions. Journal of Electrical Systems. 2017;**13**:472-488

[7] Toumi S, Amirat Y, Trabelsi M, Elbouchikhi E, Mimouni MF, Benbouzid MEH. Backstepping control of a PMSG-based marine current turbine system under faulty conditions. In: Proceedings of the IEEE International Renewable Energy Congres (IREC'09); 20-22 March 2018. Hammamet, Tunisia: IEEE; 2018. pp. 1-6

[8] Amirat Y, Benbouzid MEH, AlAhmer E, Bensaker B, Turri S. A brief status on condition monitoring and fault diagnosis in wind energy conversion systems. Renewable and Sustainable Energy Reviews. 2009;**3**:2629-2636

[9] Parker MA, Ran L, Finney SJ. Distributed control of a fault-tolerant modular multilevel inverter for direct-drive wind turbine grid interfacing. IEEE Transactions on Industrial Electronics. 2013;**2013**:60

[10] Zarko D, Ban D, Lipo TA. Analytical solution for cogging torque in surface permanent-magnet motors using conformal mapping. IEEE Transactions on Magnetics. 2008;**44**:52-65

[11] Thomson JS, Kallesoe CS. Stator fault modelling of induction motors. In: Proceedings of the IEEE International Symposium on Power Electronics, Electrical Drives, Automation and Motion (SPEEDAM); 23-26 2006. Taormina, Italy: IEEE; 2006

[12] Toumi S, Benelghali S, Trabelsi M, Elbouchikhi E, Amirat Y, Benbouzid MEH, et al. Modeling and simulation of a PMSG-based marine current turbine system under faulty rectifier conditions. Electric Power Components & Systems. 2017;**45**:715-725

[13] Tallam RM, Lee SB, Stone G, Kliman GB, Yoo J, Habetler TG, et al.

A survey of methods for detection of stator-related faults in induction machines. IEEE Transactions on Indudtry Applications. 2007;**43**:920-933

[14] Kliman GB, Lee SB, Shah MR, Lusted RM, Nair NK. New method for synchronous generator core quality evaluation. IEEE Transactions on Energy Conversion. 2004;**19**:576-582

[15] Devanneaux V, Kabbaj H, Dagues B, Faucher J. An accurate model of squirrel cage induction machines under static, dynamic or mixed eccentricity. In: Proceedings of the IEEE International Symposium on Diagnostics for Electrical Machine, Power Electronics and Drives (SDEMPED); 01-03 September 2001. Grado, Italy: IEEE; 2001. pp. 121-126

[16] Andriamalala RN, Razik H, Baghli L, Sargos FM. Eccentricity fault diagnosis of a dual-stator winding induction machine drive considering the slotting effects. IEEE Transactions on Industrial Electronics. 2008;**55**:4238-4251

[17] Lu B, Sharma SK. A literature review of IGBT fault diagnostic and protection methods for power inverters. IEEE Transactions on Industry Applications. 2009;**45**:1770-1777

[18] Toumi S, Benelghali S, Trabelsi M, Elbouchikhi E, Benbouzid MEH, Mimouni MF. Robustness analysis and evaluation of a PMSG-based marine current turbine system under faulty conditions. In: Proceedings of the IEEE International Conference on Sciences and Techniques of Automatic Control and Computer Engineering (STA'15); 21-23 December 2014. Hammamet, Tunisia: IEEE; 2014. pp. 631-636