New Jersey Institute of Technology
Digital Commons @ NJIT

Theses | Electronic Theses and Dissertations

5-31-1989

pH parametric pumping : an examination of different feed locations for a two and three column process with the same flow patterns and pH distribution

Roberta Rosty
New Jersey Institute of Technology

Follow this and additional works at: https://digitalcommons.njit.edu/theses

Part of the Chemical Engineering Commons

Recommended Citation

Rosty, Roberta, "pH parametric pumping : an examination of different feed locations for a two and three column process with the same flow patterns and pH distribution" (1989). *Theses*. 2045.
https://digitalcommons.njit.edu/theses/2045

This Thesis is brought to you for free and open access by the Electronic Theses and Dissertations at Digital Commons @ NJIT. It has been accepted for inclusion in Theses by an authorized administrator of Digital Commons @ NJIT. For more information, please contact digitalcommons@njit.edu.

Copyright Warning & Restrictions

The copyright law of the United States (Title 17, United States Code) governs the making of photocopies or other reproductions of copyrighted material.

Under certain conditions specified in the law, libraries and archives are authorized to furnish a photocopy or other reproduction. One of these specified conditions is that the photocopy or reproduction is not to be "used for any purpose other than private study, scholarship, or research." If a, user makes a request for, or later uses, a photocopy or reproduction for purposes in excess of "fair use" that user may be liable for copyright infringement,

This institution reserves the right to refuse to accept a copying order if, in its judgment, fulfillment of the order would involve violation of copyright law.

Please Note: The author retains the copyright while the New Jersey Institute of Technology reserves the right to distribute this thesis or dissertation

Printing note: If you do not wish to print this page, then select "Pages from: first page # to: last page #" on the print dialog screen

NJIT New Jersey's Science & Technology University

The Van Houten library has removed some of the personal information and all signatures from the approval page and biographical sketches of theses and dissertations in order to protect the identity of NJIT graduates and faculty.

ABSTRACT

Title of Thesis: PH Parametric Pumping: An Examination of Different Feed Locations for a Two and Three Column Process with the Same Flow Patterns and PH Distribution

Roberta Rosty, Master of Science, 1981

Thesis directed by: Dr. H. T. Chen
Assistant Chairman, Chemical Engineering Department

PH parametric pumping is used to separate protein mixtures of Hemoglobin and Albumin.

In this thesis, modifications to a two-column process, where the fluid stage flow pattern and the pH distributions were constant, were explored. These modifications consisted of: changes in the feed stream inlet and outlet locations, changes in the amount of feed itself, and an addition of another column and reservoir to the original two-column process. The results were obtained through computer simulation.

Results indicate that the batch or no-feed two and three column processes yield better separations of the two proteins than the same processes with feed streams. The different feed location cases were ranked and this listing can be found in the results section for the two and three column processes. Also, the conclusion section

contains an overall ranking list of both processes.

Results also indicate that the separations obtained for the three-column process were better overall than for the two-column process, and that smaller feed amounts for both processes yielded better separations.

PH PARAMETRIC PUMPING:
AN EXAMINATION OF DIFFERENT FEED LOCATIONS FOR A TWO AND THREE COLUMN PROCESS WITH THE SAME FLOW PATTERNS AND PH DISTRIBUTION

BY

ROBERTA ROSTY

Thesis submitted to the Faculty of the Graduate School of the New Jersey Institute of Technology in partial fulfillment of the requirements for the degree of Master of Science in Chemical Engineering

1981

This thesis is to be used only with due regard to the rights of the author. Bibliographical references may be noted, but passages must not be copied without permission of the College and without credit being given in subsequent written or published work.

APPROVAL OF THESIS

PH PARAMETRIC PUMPING: AN EXAMINATION OF DIFFERENT FEED LOCATIONS FOR A TWO AND THREE COLUMN PROCESS WITH THE SAME FLOW PATTERNS AND PH DISTRIBUTION

BY

ROBERTA ROSTY

FOR

THE DEPARTMENT OF CHEMICAL ENGINEERING

NEW JERSEY INSTITUTE OF TECHNOLOGY

BY

FACULTY COMMITTEE

APPROVED:

NEWARK, NEW JERSEY

1981

VITA

Name: Roberta Rosty.

Permanent address:

Degree and date to be conferred: MS Chem. Eng., 1981.

Date of birth:

Place of birth:

Secondary education: Paramus Catholic H.S., 1973.

Collegiate institution attended	Dates	Degree	Date of Degree
NJIT, Newark, N.J.	73-77	BS	May, 1977.
NJIT, Newark, N.J.	77-81	MS	May, 1981.

Major: Chemical Engineering.

Minor: Mathematics.

Publications: None.

Positions held: Development engineer at:

Lever Bros. Research Center
45 River Rd.
Edgewater, N.J. 07020.

Chemical engineer at:

ARRADCOM
Dover, N.J. 07801.

ACKNOWLEDGMENTS

I would like to express my appreciation to Lever Bros. Co. for the financial support which they provided me to complete my Master's degree. Also, thanks are in order to my family for the assistance they gave me in the preparation of this thesis and especially to Dr. Chen, my adviser, for his technical guidance.

TABLE OF CONTENTS

Chapter — Page

TITLE PAGE. i

ACKNOWLEDGEMENT. ii

TABLE OF CONTENTS iii

LIST OF TABLES v

LIST OF FIGURES vi

LIST OF COMPUTER PROGRAMS x

INTRODUCTION 1

I. BACKGROUND 2

A. Theoretical Background 2

B. A Physical Description of the Parametric Pumping Process- Experimental Equipment and Material Used 8

C. The Graphical Method for Determining Separation 9

II. EXPLANATION OF COMPUTER PROGRAMS WRITTEN. 17

A. A Discussion of Computer Language, Data, and Variables 17

B. An Explanation of Material and Equilibrium Balances 19

III. DISCUSSION OF RESULTS OBTAINED 24

A. The Two-Column Process 24

1. Flow Diagrams 24

2. Computer Programs 26

3. Graphical Calculations 27

Chapter Page

4. Results 30

B. The Three-Column Process 32

1. Flow Diagrams 32

2. Computer Programs 33

3. Graphical Calculations 34

4. Results 35

IV. CONCLUSIONS 36

APPENDIX 1. TABLES 38

APPENDIX 2. FIGURES 43

APPENDIX 3. FLOW DIAGRAMS AND CORRESPONDING COMPUTER PROGRAMS 75

APPENDIX 4. A TYPICAL EXAMPLE OF THE COMPUTER PROGRAMS' PRINTOUT OF RESULTS 136

APPENDIX 5. NOMENCLATURE 146

SELECTED BIBLIOGRAPHY 155

LIST OF TABLES

Table — Page

I. Given Data Read into Computer Programs for Both the 2 & 3 Column Processes 39

II. Separation Factors for the Two-Column Process (Batch Case and Cases 1-7) 41

III. Separation Factors for the Three-Column Process (Batch Case and Cases 1-3) 42

LIST OF FIGURES

Figure		Page
I.	The Effects of Different PH's of Protein A on a Cationic and Anionic Ion Exchanger.	44
II.	A Simple One-Column, Four Stage Separation Example.	45
III.	Graphical Calculation of the Separation Achieved with a One-Column Batch Process. .	46
IV.	Graphical Results of a Computer Simulation of a Two-Column Process-Case 1,2,3,4,5,6,7 for the Condition where F1=F2=0.	47
V.	Graphical Results of a Computer Simulation of a Two-Column Process- Case 1 for the Condition where F1=F2=3.0.	48
VI.	Graphical Results of a Computer Simulation of a Two-Column Process - Case 1 for the Condition where F1=F2=6.0.	49
VII.	Graphical Results of a Computer Simulation of a Two-Column Process- Case 1 for the Condition where F1=F2=9.0.	50
VIII.	Graphical Results of a Computer Simulation of a Two-Column Process- Case 1 for the Condition where F1=F2=12.0.	51
IX.	Graphical Results of a Computer Simulation of a Two-Column Process-Case 2 for the Condition where F1=F2=3.0.	52
X.	Graphical Results of a Computer Simulation of a Two-Column Process- Case 2 for the Condition where F1=F2=6.0.	53
XI.	Graphical Results of a Computer Simulation of a Two-Column Process - Case 2 for the Condition where F1=F2=9.0	54
XII.	Graphical Results of a Computer Simulation of a Two-Column Process- Case 2 for the Condition where F1=F2=12.0	55
XIII.	Graphical Results of a Computer Simulation of a Two-Column Process - Case 3 for the Condition where F1=F2=3.0	56

Figure Page

XIV. Graphical Results of a Computer Simulation of a Two-Column Process - Case 3 for the Condition where F1=F2=6.0 57

XV. Graphical Results of a Computer Simulation of a Two-Column Process - Case 3 for the Condition where F1=F2=9.0 58

XVI. Graphical Results of a Computer Simulation of a Two-Column Process - Case 3 for the Condition where F1=F2=12.0 59

XVII. Graphical Results of a Computer Simulation of a Two-Column Process - Case 4 for the Condition where F1=F2=3.0 60

XVIII. Graphical Results of a Computer Simulation of a Two-Column Process - Case 4 for the Condition where F1=F2=6.0 61

XIX. Graphical Results of a Computer Simulation of a Two-Column Process - Case 4 for the Condition where F1=F2=9.0 62

XX. Graphical Results of a Computer Simulation of a Two-Column Process - Case 4 for the Condition where F1=F2=12.0 63

XXI. Graphical Results of a Computer Simulation of a Two-Column Process - Case 5 for the Condition where F1=F2=3.0 64

XXII. Graphical Results of a Computer Simulation of a Two-Column Process - Case 6 for the Condition where F1=F2=3.0 65

XXIII. Graphical Results of a Computer Simulation of a Two-Column Process - Case 7 for the Condition where F1=F2=3.0 66

XXIV. Graphical Results of a Computer Simulation of a Three-Column Process - Cases 1-3 for the Condition where F1=F2=0.0 67

XXV. Graphical Results of a Computer Simulation of a Three-Column Process - Case 1 for the Condition where F1=F2=3.0 68

Figure		Page
XXVI.	Graphical Results of a Computer Simulation of a Three-Column Process - Case 2 for the Condition where F1=F2=3.0	69
XXVII.	Graphical Results of a Computer Simulation of a Three-Column Process - Case 3 for the Condition where F1=F2=3.0	70
XXVIII.	Graphical Determination of YHCOL1(1,1)- Two-Column Process	71
XXIX.	Graphical Determination of YACOL1(1,1)- Two-Column Process	72
XXX.	Graphical Determination of YHCOL1(2,1)- Two-Column Process	73
XXXI.	Graphical Determination of YACOL1(2,1)- Two-Column Process	74
XXXII.	Volumetric Flow Diagram of the Two-Column Process	76
XXXIII.	Flow Diagram of a Two-Column Process - Case 1.	81
XXXIV.	Flow Diagram of a Two-Column Process - Case 2.	86
XXXV.	Flow Diagram of a Two-Column Process - Case 3	91
XXXVI.	Flow Diagram of a Two-Column Process - Case 4.	96
XXXVII.	Flow Diagram of a Two-Column Process- Case 5	101
XXXVIII.	Flow Diagram of a Two-Column Process- Case 6	106
XXXIX.	Flow Diagram of a Two-Column Process- Case 7	111
XL.	Volumetric Flow Diagram of the Three-Column Process	116
XLI.	Flow Diagram of the Three-Column Process- Case 1	121

Figure Page

XLII. Flow Diagram of the Three-Column Process - Case 2. 126

XLIII. Flow Diagram of the Three-Column Process - Case 3 131

LIST OF COMPUTER PROGRAMS

Computer Program		Page
I.	Two-Column Batch Process	77
II.	Two-Column Process - Case 1	82
III.	Two-Column Process - Case 2	87
IV.	Two-Column Process - Case 3	92
V.	Two-Column Process - Case 4	97
VI.	Two-Column Process - Case 5	102
VII.	Two-Column Process - Case 6	107
VIII.	Two-Column Process - Case 7	112
IX.	Three-Column Batch Process	117
X.	Three-Column Process - Case 1	122
XI.	Three-Column Process - Case 2	127
XII.	Three-Column Process - Case 3	132

INTRODUCTION

Dr. Chen and his colleagues have been working on pH parametric pumping for several years. Both experimental and computer simulation work are now in progress. This thesis deals solely with the computer simulation aspect of these studies and examines some modifications of two specific systems in order to find the more effective conditions for separation.

CHAPTER I - Background

A) Theoretical Background

Parametric pumping is a separation process which can be used to separate different protein components in a mixture.(2:320) This separation requires an energy source such as:

1. Electrical
2. Magnetic
3. Thermal

or 4. Chemical.

Chemical energy, in the form of an alternating pH gradient, drives the parametric pumping separation process discussed in this thesis.(5:171)

Proteins carry both positive and negative charged groups, but the net charge is dependent on the pH. Refer to Figure 1. At low pH (P_2), protein A has a net positive charge and therefore, will be taken up by a cationic ion exchanger but released by an anionic ion exchanger. At high pH (P_1), the process is reversed. The pH at which there is zero net charge on the protein is called the isoelectric point, I.

Therefore, by alternating the pH of the protein mixture with the proper type of ion exchanger and flow pattern, a good separation can be effected.

The ion exchanger (cationic or anionic) is in the form of a solid gel which is placed inside a fixed bed or column. The gel has a void volume which allows the passage of fluid through it and requires the usage of a pump.(3:4)

Refer to Figure 2. This figure gives an example of a one-column separation scheme with a reservoir on either end of it. Each reservoir is equipped with a dialyzer and an automatic titrator to keep the pH of the reservoir at a certain level. The top and bottom reservoirs are maintained at pH levels of P_2 and P_1, respectively. The initial pH in the column is P_1. Q is the reservoir displacement rate (cc/sec) and t_I is the time elapsed after the first stage has ended. Therefore, Qt_I is the void volume of the column, V. V_T is the top reservoir's dead volume or what is left in the top reservoir after the downflow process has taken place. V_B, likewise, is the dead volume of the bottom reservoir. Let x and y be the concentrations of A in the solid and fluid phases, respectively. The four stages or phases shown in Figure 2 comprise one cycle. Many cycles are needed to affect a good separation of the proteins. The four stages of the first cycle are outlined below:

1) Transfer down: The fluid in the top reservoir is transferred to the column, and the fluid in the column is transferred to the bottom reservoir.
2) Circulation and Equilibration at P_2: The new fluid in

the column is circulated through it for a time, t_{II}, which is long enough for a phase equilibrium to be established at P_2. A new concentration of x and y is then established in the column, whose values can be found by performing a mass balance.

$$(V_T+V)y_{TRI} + \bar{V}x_{CI} = (V_T+V)y_{TRII} + \bar{V}x_{CII} \quad \ldots\ldots (1)$$

Where:

$\bar{V}$ = The volume of ion exchanger in the column.

y_{TRI} = The concentration of A in the top reservoir (Stage I).

y_{TRII} = The concentration of A in the top reservoir (Stage II).

x_{CI} = The concentration of A in the column (Stage I).

x_{CII} = The concentration of A in the column (Stage II).

V_T and V were already defined. X refers to solid phase concentration and y refers to liquid stage concentration.

In other words equation 1 states that, the concentration of A in the top reservoir plus it's concentration in the solid gel in the column of Stage I times the appropriate volumes is equal to a new concentration for the same reservoir and column in Stage II after equilibration, times the appropriate volumes.

3) Transfer up: The solution in the bottom reservoir of Stage II is transferred up to the column, whereas the

solution in the column is transferred up to the top reservoir.

4) Circulation and Equilibration at P_1: The column pH changes back to P_1 after the equilibration process, where solution is circulated through the column for a time, t_{IV}. Time, t_{IV}, is assumed to be enough time to reach equilibration.

The following mass balance relationship applies:

$$(V_B+V)y_{BRIII}+\bar{V}x_{CIII} = (V_B+V)y_{BRIV}+\bar{V}x_{CIV} \quad \ldots\ldots (2)$$

Where:

y_{BRIII}=The concentration of A in the bottom reservoir (Stage III).

y_{BRIV} =The concentration of A in the bottom reservoir (Stage IV).

x_{CIII} =The concentration of A in the column (Stage III).

x_{CIV} =The concentration of A in the column (Stage IV).

V_B was already defined.(3:4-12)

"There are 4 basic requirements for a parametric pumping process and they are:

1. A two-phase system is required.
2. There must be an equilibrium distribution of a separation component between the phases.
3. There must be an alternating relative velocity between the phases.
4. Also, there must be an alternating interphase mass flux obtained by periodically changing one

or more of the intensive thermodynamic variables that affect equilibrium." (5:171-181)

How these 4 basic requirements were satisfied is described as follows:

1. A two-phase system is present since the gel in the column is a solid phase and the mixture to be separated is a liquid.
2. The solute will have an equilibrium distribution between the solid and liquid phases. The concentration of solute in the solid phase, x, is related to the concentration of solute in the liquid phase, y, by the following equation:

$$x=ky \quad . \quad . \quad . \quad . \quad . \quad . \quad . \quad . \quad . \quad . \quad . \quad . \quad . \quad . \quad . \quad . \quad . \quad (3)$$

   where k is a function of pH and ionic strength.
3. The solid phase or the ion exchanger is stationary in the fixed column. However, the fluid phase alternates direction of flow and therefore its relative velocity is shown in stages I and III in Figure 2.
4. The mass flux of a separation component (Protein A) between the solid and liquid phases alternates as shown in Figure 2, stages II and IV. The thermodynamic variable that affects the equilibrium would be the pH and as shown in Figure 2, it changes periodically. (1:3)

The four stages or phases shown in Figure 2 comprise 1 cycle. Many cycles are needed to affect a good separation of the proteins. "The change of pH displaces the interphase equilibrium and, in combination with the reciprocating flow, causes preferential movement of the sorbable components of the mixture towards one end of the bed, leading to a building of the separation from cycle to cycle."(2:320) After a certain number of cycles, a limiting condition on the reservoir concentrations is reached where they will remain constant as the cycle numbers keep increasing.

The parametric pumping process is beneficial because continuously it has:

1. High separation factors,
2. Large feed throughput in small equipment,

and

3. No solid phase regeneration.(2:320)

CHAPTER I

B) A Physical Description of the Parametric Pumping Process- Experimental Equipment and Material Used

The experimental apparatus includes a column (0.016 meters in Inside Diameter and 0.4 meters in length). It is packed with an ion exchanger which is the solid phase. The type used experimentally is CM Sepharose (Registered Trademark) ion exchange media manufactured by Pharmacia Fine Chemicals. It is a macroporous, bead formed ion exchanger derived from the cross linked agarose gel Sepharose CL-6B.

The protein mixture is made up of Worthington human haemoglobin and human serum albumin. The isoelectric points for haemoglobin and albumin are 6.7 and 4.7, respectively. For all runs, P_1=8.0 and P_2=6.0. Therefore,

$$I_A < P_2 < I_H < P_1 \quad \ldots\ldots\ldots\ldots (4)$$

Where:

I_A = The isoelectric point of Albumin, and

I_H = The isoelectric point of Hemoglobin.

Reciprocating flow within the column is maintained by a peristaltic pump manufactured by Pharmacia Fine Chemicals.

The pH levels in the reservoirs are maintained constant by titration with an acid and base. Namely, hydrochloric acid and sodium hydroxide solutions are used.(2:323)

Chapter I

C) The Graphical Method for Determining Separation

The graphical method for determining the extent of separation obtained for a one-column batch process will be explained in this section.

The computer simulation method was used as opposed to the graphical method to obtain the results for this thesis because:

1) It is more accurate than the graphical method. The answers obtained with the graphical method are limited by the mechanical methods used - the size of the graph paper and its grid, the width of the pencil point, etc. These errors accumulate from cycle to cycle since each graphical calculation depends on the last one made.
2) It is time-saving and labor-saving especially for multi-cycle calculations.

Figure 2 is a flow diagram of a simple one-column, four stage separation case. The graphical method will be explained for this case as an example.

The basic assumptions made for the graphical method are:

1) The solute (protein) will reach equilibrium between the two phases according to a linear form:

$$x=ky \quad \ldots\ldots\ldots\ldots\ldots\ldots (5)$$

where k is a function of pH and ionic strength.

2) The time allotted for a circulation stage is sufficient for a phase equilibrium to be established.

An x-y diagram and a flow diagram of a one-column, four stage batch separation case is shown in Figure III. Some of the nomenclature in this figure has already been used and their definitions can be found in the nomenclature appendix. The new symbols in Figure III represent the following:

BR- The bottom reservoir.

BS- The x-y point on the $k_{p_1}^-$ equilibrium line which marks the steady stage concentration of the bottom reservoir after many cycles have elapsed.

B1-
B2
B3 - The x-y point on the $k_{p_1}^-$ equilibrium line which represents the concentration of the bottom reservoir during each cycle. (S1 to S3)

S1-
S2
S3
S4 - Stages 1-4, respectively.

T1-
T2
T3 - The x-y point on the $k_{p_2}^-$ equilibrium line which represents the concentration of the top reservoir during each cycle. (S1 to S3)

TR- The top reservoir.

TS- The x-y point on the $k_{p_2}^-$ equilibrium line which marks the steady stage concentration of the top reservoir after many cycles have elapsed.

x_{B2}- The concentration of a given protein in the solid
x_{B3} phase for the one-column process (Figure III)- Stage 4, Cycles 1 and 2, respectively. Also, x_{B2}-S1,Cycle2.

x_o - The concentration of a given protein in the solid phase initially.

x_{T1}- The concentration of a given protein in the solid
x_{T2} phase for the one-column case (Figure III). x_{T1}- Stages 2 and 3, Cycle 1, x_{T2}- Stages 2 and 3, Cycle 2

x_∞ - The concentration of a given protein in the solid phase if the process were continued an infinite number of cycles.

y^*_{B1}- The concentration of a given protein in the fluid phase for the one-column case (Figure III)-First cycle-(Bottom reservoir-stage 1 and 2, Column-Stage 3).

y_{B2}- The concentration of a given protein in the fluid phase for the one-column case (Figure III)-First Cycle-(Column-Stage 4), Second cycle- (Bottom reservoir-Stage 1 and 2, column-stage 3).

y_{B3}- The concentration of a given protein in the fluid phase for the one-column case (Figure III)- Second cycle-(Column-stage 4), Third cycle-(Bottom reservoir -stage 1 and 2, column stage 3).

y_o - The concentration of a given protein in the fluid phase initially.

y_{T1}- The concentration of a given protein in the fluid phase for the one-column case (Figure III)-Cycle I- (Column-stage 2, top reservoir-stages 3 and 4),

second cycle-(Column-stage 1).

y_{T2}- The concentration of a given protein in the fluid phase for the one -column case (Figure III)-Second Cycle-(Column-Stage 2, Top reservoir-stages 3 and 4), Third Cycle-(Column-stage 1).

*Note: The bracketed number after the y's represent the pH of the particular column or reservoir being referred to.

The graphical determination of TS and BS will now follow.

Refer to Figure III. The slope at a pH level of P_1 is k_{p_1} (k=x/y from equation 5) and the slope at a pH level of P_2 is k_{p_2}. The two lines with slopes equal to k_{p_1} and k_{p_2} are drawn originating at zero. They represent equilibrium values of x and y at the two pH levels.

The initial concentration in the column is marked by the point O. The first and second cycles are graphed by stages as follow:

STAGE 1- After the transfer of the liquid in the top reservoir to the column, and the liquid in the column to the bottom reservoir- the y_{B1} variable is equal to $y_o(8)$, and B1 is equal to point O.

STAGE 2- The top reservoir and the column's liquid phases are circulated and an equilibrium between the solid phase in the column and the liquid phase is reached, Point T1 on the graph. T1 is located on the $k^-_{p_2}$ equilibrium line since the pH of the column has now changed. An equilibrium balance and material balance between stages 1 and 2 is given below.

$$(V+VDEAD)*y_o+x_o*VB=(V+VDEAD)*y_{T1}+VB*x_{T1} \quad . \; . \; . \quad (6)$$

Or,

$$\frac{x_{T1}-x_o}{y_{T1}-y_o} = \frac{-(V+VDEAD)}{VB} \quad . \; . \; . \; . \; . \; . \; . \; . \; . \; . \; . \quad (7)$$

And,

$$x_o=k^-_{p_1} * y_o \quad ; \quad x_{T1}=k^-_{p_2} * y_{T1} \quad . \; . \; . \; . \; . \; . \; . \quad (8)$$

Note: VDEAD= V_T or V_B from Chapter 1, Section A and VB = $\bar{V}$ from the same section of this thesis.

Equation 7 gives the slope of the line between the two points x_o, y_o and y_{T1}, x_{T1}. Equation 8 shows that these two points are located on the $k^-_{p_1}$ and $k^-_{p_2}$ equilibrium lines. With this information the point T1 can be located on the

$k_{p_2}^{-}$ equilibrium line, which is the intersection of x_{T1} and y_{T1}.

STAGE 3- The liquid in the column in stage 2 is transferred to the top reservoir and the liquid phase in the bottom reservoir is transferred to the column.

STAGE 4- After circulation and equilibration the following material and equilibrium equations result:

$$(V+VDEAD)*y_{B1}+VB*x_{T1}=(V+VDEAD)*y_{B2}+VB*x_{B2} \quad \ldots(9)$$

Or,

$$\frac{x_{T1}-x_{B2}}{y_{B1}-y_{B2}} = -\frac{(V+VDEAD)}{VB} \quad \ldots(10)$$

And,

$$x_{T1}=k_{p_2}^{-} * y_{T1} \quad ; \quad x_{B2} = k_{p_1}^{-} * y_{B2} \quad \ldots(11)$$

Equation 10 shows the slope between the two points x_{T1},y_{B1} and x_{B2},y_{B2} is equal to $-(V+VDEAD)/VB$. With this information and the knowledge that the x_{B2},y_{B2} point (or B2) is located on the $k_{p_1}^{-}$ equilibrium line(Equation 11), point B2 is graphically determined.

Cycle 2-

STAGE 1- The liquid in the column of stage 4, cycle 1 is transferred to the bottom reservoir and the liquid in the top reservoir of stage 4, cycle 1 is transferred to the column.

STAGE 2- The top reservoir and the column's liquid phases are circulated and an equilibrium between the solid phase in the column and the liquid phase

is reached, Point T2 on the graph. T2 is located on the $k^-_{p_2}$ equilibrium line since the pH of the column has now changed. An equilibrium and material balance between stages 1 and 2 is given below:

$$(V+VDEAD)*y_{T1}+VB*x_{B2}=(V+VDEAD)*y_{T2}+VB*x_{T2} \quad . \quad (12)$$

Or,

$$\frac{x_{T2}-x_{B2}}{y_{T2}-y_{T1}} = \frac{-(V+VDEAD)}{VB} \quad . \quad (13)$$

And,

$$x_{T2}=k^-_{p_2} * y_{T2} \quad . \quad (14)$$

Equation 13 shows the slope between the two points x_{B2}, y_{T1} and x_{T2}, y_{T2} is equal to $-(V+VDEAD)/VB$. With this information and the knowledge that the x_{T2}, y_{T2} point (or T2) is located on the $k^-_{p_2}$ equilibrium line (Equation 14), point T2 is graphically determined.

STAGE 3- The liquid in the column in stage 2 is transferred to the top reservoir and the liquid phase in the bottom reservoir is transferred to the column.

STAGE 4- After circulation and equilibration the following material and equilibrium equations result:

$$(V+VDEAD)*y_{B2}+VB*x_{T2}=(V+VDEAD)*y_{B3}+VB*x_{B3} \quad . \quad (15)$$

Or,

$$\frac{x_{B3}-x_{T2}}{y_{B3}-y_{B2}} = \frac{-(V+VDEAD)}{VB} \quad \ldots\ldots\ldots\ldots\ldots\ldots (16)$$

And,

$$x_{B3}=k^{-}_{p_1} * y_{B3} \quad \ldots\ldots\ldots\ldots\ldots\ldots (17)$$

Equation 16 shows the slope between the two points x_{T2},y_{B2} and x_{B3},y_{B3} is equal to -(V+VDEAD)/VB. With this information and the knowledge that the x_{B3},y_{B3} point (or B_3) is located on the $k^{-}_{p_1}$ equilibrium line (Equation 17), point B3 is located graphically.

The cycles continue in this manner until equilibrium between the solid and liquid phases is established at a steady-state condition. At steady state, the concentrations of the reservoirs and column don't change. These steady-state concentrations are located on the $k^{-}_{p_2}$ and $k^{-}_{p_1}$ as points TS and BS.(3:4-14)

This graphical case is a simple type since only two equilibrium lines and one column is involved. With more columns and equilibrium lines the graphical procedure becomes more complex. Examples of the more complex nature can be located in the following references:

Chen, H.T., et al. "Separation of Proteins Via pH Parametric Pumping," August, 1979.

Chen, H.T., et al. "Separation of Proteins Via Multicolumn pH Parametric Pumping."

CHAPTER II

Explanation of Computer Programs Written

A) A Discussion of Computer Language, Data and Variables

The computer language used to write the programs which are the basis for this thesis was Fortran. Data read into these programs plus an explanation of what each constant and variable in the data set represent is listed in Table I.

An explanation of how the majority of variables in these programs can be interpreted, follows:

Example: YHRS6(1,40)

1)First letter can be:

Either Y= The concentration of protein in the liquid phase,
or
X=The concentration of protein in the solid phase.

2) Second letter can be:

Either H= Hemoglobin,
or
A= Albumin.

3) Third through fifth letters can be:

Either RS= Reservoir,
or
RSL= Left Reservoir,
or
RSR= Right Reservoir,
or
COL= Column.

4) Number before the parenthesis= The stage being referred to.

5) First number in parenthesis= The number of the reservoir column being referred to. Reservoirs and columns are numbered from the top down.

6) Second number in parenthesis=The cycle being referred to.

In other words, YHRS6(1,40) is equal to the concentration of the Hemoglobin protein in the liquid phase of the top reservoir located in cycle 40 and the sixth stage.

B) Explanation of Material and Equilibrium Balances

Refer to Figure 32 and Figure 40. These two figures show the volumetric flow diagram for the two and three column cases, respectively.

Each cycle includes eight stages. These eight stages include 4 equilibration stages and 4 transfer stages. Stages I, III, V and VII are transfer stages. The other 4 are the equilibration stages. In each transfer stage the mass flow of the liquid phase is in one direction and this direction alternates every transfer stage. After the transfer has taken place, the fluid in each column is circulated from the column to a specified reservoir and then back to the column again. This circulation continues for a specified time, during which equilibration takes place.

The volume abbreviations used in Figures 32 and 40 are explained as follows:

V= The volume of fluid needed to fill the void volume in the column, cm^3.

D= The dead volume or volume of fluid left in the reservoir after the downflow process has taken place, cm^3.

VB= The volume of solid gel in the column, cm^3.

Figure 32 and 40 represent the batch parametric process. Once the process is started, no external feed sources are used.

With a continuous process, there are external feed sources. The flow pattern, column and reservoir set-up and the pH distribution of the two-column case is taken from the third reference given in the bibliography. This thesis is concerned with modifications to this process, namely, different feed locations and an additional column set-up.

The columns in Figures 32 and 40 are represented by squares and the reservoirs are represented by circles. The dotted line in the column box represents that there are two phases in the column- both liquid and solid. VB is the volume of the solid and V is the volume of the liquid.

So the reader will understand the computer programs and the results discussed later on, some lines will be examined below:

Example 1: (from computer programs in Appendix C)

```
YHCOL3(I,J)=((V+VDEAD)*YHRS1(I,J)+VB*
XHAKP1*YHCOL1(I,J))/(V+VDEAD+VB*HAKP2) . . . . . (18)
```

or

```
(V+VDEAD)*YHCOL3(I,J)+VB*HAKP2*YHCOL3(I,J)=(V+VDEAD)*
YHRS1(I,J)+VB*HAKP1*YHCOL1(I,J) . . . . . (19)
```

where I and J will be set equal to 1.

Refer to Figure 32, stages 1 and 3.

1) Top Reservoir, Stage 1- The concentration of fluid in the reservoir will be YHRS1(I,J) and there is (V+VDEAD) total volume in the top reservoir. (Note: VDEAD was abbreviated to D in Figures 32 and 40. Both refer to the dead volume of the reservoir.)

Therefore, the mass in the top reservoir=

Volume (cm^3) * Concentration (gms/cm^3)= Mass(gms) or,

(V+VDEAD) * YHRS1(I,J) = Mass. . (20)

2) Top Column, Stage 1- The concentration of solid in the top column = XHCOL1(I,J), but since the gel and fluid in the column are in equilibrium, x=ky.

So, XHCOL1(I,J)= k * YHCOL1(I,J) . . . . . (21)

The k in this case is HAKP1. An explanation of how these k constants can be interpreted follows:

Example: HAKP1

1) First letter can be:

Either: H= Hemoglobin
or
A= Albumin.

2) Second letter can be:
Either: A= Anionic column
or
C= Cationic column.

3) Third letter:

Always k referring to the equilibrium constant.

4) Fourth letter and corresponding number can be:
Either: P1= Refers to a certain pH level.
or
P2= " " "
or
P3= " "

Figure 33 shows which pH level is present in each reservoir and column for the different stages. These pH levels will stay the same for each example given.

Therefore, the mass of a certain solute in the solid phase of the top column (Stage 1)=

Volume * Concentration = Mass
VB * HAKP1 * YHCOL1(I,J) = Mass . . (22)

3) Top Reservoir and Column, Stage 3- Stage 2 is an equilibration stage, where the liquid phase in the top reservoir and column are circulated for a certain time, t_{II}. This time is assumed to be sufficient for the two liquid components to be thoroughly mixed. In other words, the fluid in the top column and reservoir in Stage 3 are the same. (For the rest of this thesis- when a concentration in a particular stage is given, it refers to the initial concentration of that stage.)

Also, the solid and fluid phase in the top column of stage 3 are in equilibrium with each other.

As stated above, the fluid in the top column and reservoir are the same or:

YHRS3(I,J) = YHCOL3(I,J) . . . . . .(23)

In Stage 3, the volume of fluid in the top reservoir is VDEAD. So:

Top Reservoir	Concentration * Volume = Mass	
	YHRS3(I,J) * VDEAD	or,
	YHCOL3(I,J) * VDEAD = Mass . . . .(24)	
Top Column	Concentration * Volume = Mass	
Liquid phase:	YHCOL3(I,J) * V = Mass . . . .(25)	
Solid phase :	XHCOL3(I,J) * VB or since x=ky,	
	HAKP2*YHCOL3(I,J)*VB = Mass . . . .(26)	
Liquid+ Solid phase :	V*YHCOL3(I,J)+VB*HAKP2*YHCOL3(I,J)= Mass. . (27)	

Overall mass and equilibrium balance- The mass in the top reservoir and column before transfer stage 1 is equal to the mass in the top reservoir and column after equilibration stage 2, since there are no external feed inputs or take-offs. The overall equation then comes out to be:

```
(V+VDEAD)*YHCOL3(I,J)+VB*HAKP2*YHCOL3(I,J)=(V+VDEAD)*
          YHRS1(I,J)+VB*HAKP1*YHCOL1(I,J) . . . . . .(19)
```

This is equation 19 and the example computer line which we began with.

Equation 19 is a combination of equations 20, 22, 24, and 27.

CHAPTER III

A Discussion of the Results Obtained

A) The Two-Column Process

1) Flow Diagrams

A flow diagram of the two-column set-up is shown in Figure 32. This is the batch process with no external feed or output locations. Figure 32, also gives the volumes that are in each column and reservoir for each stage. The symbols can be interpreted as follows:

V = Volume of liquid phase = 12 cm^3.

VDEAD = Dead volume of liquid phase = 10 cm^3.

VB = Volume of solid phase = 4 cm^3.

The columns are divided by a dotted line to represent the two phases, solid and liquid, which are in the column. In reality, however, the two phases are interdispersed throughout the column since the liquid phase occupies the void volume of the gel or solid phase. The columns are shown as squares and the reservoirs as circles in the diagram. Since there are no feed streams in Figure 32, F1=F2=0.0, where:

F1= Feed stream 1, and

F2= Feed stream 2.

The symbols, t with subscripted roman numerals, represent the time in seconds allotted for each stage.

Figures 33-39 are modifications to Figure 32 and are labeled Cases 1-7, respectively. These cases differ from

the batch case in that they contain two feed inlet and outlet streams and differ from each other by the locations of these feed streams. Cases 1-7 are continuous processes.

The column boxes contain information as to what pH level it's at and whether it is an anionic ion exchanger (+) or a cationic ion exchanger(-). The pH levels are interpreted as follows:

p_1= First pH level =8.0

p_2= Second pH level =6.0

p_3= Third pH level =4.0

The pH levels in the reservoirs relate to the above descriptions as well.

The other symbols in the reservoirs refer to which reservoir it is:

R1= Top reservoir,

RL2= Second reservoir, Left,

RR2= Second reservoir, Right,

and R3= Third reservoir.

2) Computer Programs

The computer programs relating to the two column case are given in Appendix 3, Cases 1-7.

In Chapter II, the material and equilibrium balances were explained. Also, nomenclature was also discussed. Table 1 lists the data read into the program. These constants were all given. The number of cycles needed was determined by running a program and seeing at what approximate point additional cycles gave no significant difference in results obtained.

Each protein component, Albumin(A) and Hemoglobin(H), were treated independently in the computer program. Each mass and equilibrium balance was duplicated excepting that one referred to A and one to H.

3) Graphical Calculations

Figures 28-31 contain graphical calculations of initial Stage 1, Cycle 1 concentration conditions for the two-column process. The abscissa is the concentration of protein in the liquid phase and the ordinate is the concentration of protein in the solid phase.

Since x=ky, the slope of the lines drawn (x/y) is equal to k, the equilibrium constant.

Figure 28 (The Graphical Determination of YHCOL1(1,1)) will be explained in detail. Expla nations for the other 3 figures are similar.

Figure 28 lists the three equilibrium constant values for hemoglobin in the anionic column. Only two lines were drawn since $k^{+}_{p_3}$ and $k^{+}_{p_2}$ have the same slopes.

It will be assumed that before Stage 1 in Figure 32,there is a Stage 0 just to start-off the process. Once the process is started, Stage 0 no longer exists. In Stage 0, all the concentrations are equal to 1. Stage 0 will be identical (same pH levels and equilibration processes) to stage 7. The following equilibrium and material balances then apply:

Equilibrium: XHCOL1(0,1)=HAKP2*YHCOL1(0,1). . . . .(28)

XHCOL1(1,1)=HAKP1*YHCOL1(1,1). . . . . (29)

Material:

(V+VDEAD)*YHCOL1(0,1)+VB*XHCOL1(0,1)=

(V+VDEAD)*YHCOL1(1,1)+VB*XHCOL1(1,1)

Or:

$$\frac{(V+VDEAD)}{VB}*YHCOL1(0,1)+XHCOL1(0,1)=\frac{(V+VDEAD)}{VB}*YHCOL1(1,1)+XHCOL1(1,1)$$

Or:

$$\frac{XHCOL1(1,1)-XHCOL1(0,1)}{YHCOL1(1,1)-YHCOL1(0,1)} = - \frac{(V+VDEAD)}{VB} \quad \ldots\ldots (30)$$

Since XHCOL1(0,1) and YHCOL1(0,1) are both equal to 1, the point (1,1) is marked off on the $k^+_{p_2}$ equilibrium line. This equilibrium line correlates to equation 28. From equation 29, it is known that the YHCOL1(1,1) and XHCOL1(1,1) values will be located on the $k^+_{p_1}$ equilibrium line. Equation 30 tells us the slope between the two points will be -(V+VDEAD)/VB. YHCOL1(1,1) is determined graphically to be equal to 0.76.

All of the variables which were read into the computer programs besides those listed om Table I for the two-column process are listed below:

```
YHRS1(1,1)=1.0
YARS1(1,1)=1.0
YHCOL1(1,1)=0.76
YACOL1(1,1)=0.81
YHRSR1(2,1)=1.0
YARSR1(2,1)=1.0
YHRSL1(2,1)=0.76
YARSL1(2,1)=0.81
YHCOL1(2,1)=0.87
YACOL1(2,1)=1.0
YHRS1(3,1)=0.87
YARS1(3,1)=1.0
```

YHCOL1(1,1) and YACOL1(1,1) are calculated in Figures 28 and 29. If you check stages 8 and 1 in Figure 32, the top column and the middle left reservoir will have the same concentration of each protein in Stage 1. Therefore, YHRSL1(2,1) equals YHCOL1(1,1) and YARSL1(2,1) equals YACOL1(1,1).

YHCOL1(2,1) and YACOL1(2,1) are calculated in Figures 30 and 31, respectively. Since the bottom column and the bottom reservoir in Stage 1 will have the same concentration of each protein, YHCOL1(2,1) equals YHRS1(3,1) and YACOL1(2,1) equals YARS1(3,1) for Stage 1, Cycle 1. YHRS1(1,1), YARS1(1,1), YHRSR1(2,1) and YARSR1(2,1) are equal to 1 since they are not in equilibrium with either of the two columns in Stage 1, Cycle 1.

4) Results

Graphical results for the two-column process are given in Figures 4-23. The first figure, Figure 4, gives the graphical results obtained for the batch case using the input data listed in Table #1. This figure then relates to the other cases (Cases 1-7) in that, Figure 4 would be the results obtained for Cases 1-7 where there are no feed streams or where F1=F2=0.

Figures 5-23 show the results for Cases 1-7. At first, different feed amounts were used but it was determined after four cases, that from the following conditions:

1) F1=F2=3.0
2) F1=F2=6.0
3) F1=F2=9.0
4) F1=F2=12.0

the first condition always gave the best separation. Therefore, Cases 5-7 were run only with the best separation condition (F1=F2=3.0) out of the four listed above.

Numerical results are tabulated in Table II, along with the calculated separation factor, α.

$$\alpha = \frac{YHRS1(1,40)*YARS1(3,40)}{YHRS1(3,40)*YARS1(1,40)} \quad \ldots\ldots\ldots (31)$$

Equation 31 represents the following:

$$\alpha = \frac{\text{Concentration of H in the Top Reservoir} * \text{Concentration of A in the Bottom Reservoir}}{\text{Concentration of H in the Bottom Reservoir} * \text{Concentration of A in the Top Reservoir}} \quad (4:16\text{-}16)$$

The higher separation factor yields the better separation of the proteins. Therefore for the two-column process, the cases will be listed with the best case first and the rest ranked accordingly.

1) Cases 1-7 Batch, F1=F2=0.0
2) Case 1 Continuous, F1=F2=3.0
3) Case 7 Continuous, F1=F2=3.0
4) Case 4 Continuous, F1=F2=3.0
5) Case 2 Continuous, F1=F2=3.0
6) Case 6 Continuous, F1=F2=3.0
7) Case 5 Continuous, F1=F2=3.0
8) Case 3 Continuous, F1=F2=3.0

This ranking includes only those cases which this author has worked on. Also, it only includes the best results for each case.

B) The Three-Column Process

1) Flow Diagrams

A flow diagram of the three-column set-up is shown in Figure 40. This is the batch process with no external feed or output locations. Figure 40 also gives the volumes that are in each column and reservoir for each stage.

Explanations of the nomenclature used in Figure 40 and of the process itself are the same as for the two-column process except for the following:

R2= Second Reservoir
RL3= Third Reservoir, Left
RR3= Third Reservoir, Right
R4= Fourth Reservoir and Bottom Reservoir

Figures 41 - 43 are modifications to Figure 40, and are labeled Cases 1-3, respectively. These cases differ from the batch case in that they contain two feed inlet and outlet streams and differ from each other by the locations of these feed streams. Cases 1-3 (Three-Column Process) are continuous processes.

2) Computer Programs

The computer programs relating to the three column process are given in Appendix 3, Cases 1-3 (Three-Column Process).

In Chapter II, the material and equilibrium balances were explained. Also, nomenclature was discussed.

The discussion in the computer program section for the two-column process also applies to the three-column process.

3) Graphical Calculations

The explanation of Figures 28 -31 was given in the Graphical Calculation section for the two-column process. These figures show how the initial values for Stage 1, Cycle 1 calculations were determined graphically.

These figures apply as well to the three column process. It can be seen in Figure 33 and Figure 41, that the two columns in the two- column process have the same pH distribution throughout the stages as the lower two columns in the three column process. Also, the top column in the three-column process relates to the bottom column in the two-column process. The initial values for Stage 1, Cycle 1 calculation for the three-column process work out to be the following:

YHRS1(1,1)=1.0
YARS1(1,1)=1.0
YHCOL1(1,1)=0.87
YACOL1(1,1)=1.0
YHRS1(2,1)=0.87
YARS1(2,1)=1.0
YHCOL1(2,1)=0.76
YACOL1(2,1)=0.81
YHRSL1(3,1)=0.76
YARSL1(3,1)=0.81
YHRSR1(3,1)=1.0
YARSR1(3,1)=1.0
YHCOL1(3,1)=0.87
YACOL1(3,1)=1.0
YHRS1(4,1)=0.87
YARS1(4,1)=1.0

4) Results

Graphical results for the three-column process are shown in Figures 25-27, and in Figure 24. Figure 24 gives the graphical results obtained for the batch case using the input data listed in Table #1. This figure then relates to the other cases (Case 1-3, Three Column Process) in that, Figure 24 would be the results obtained for Cases 1-3 where there are no feed streams or where F1=F2=0.

Figures 25-27 show the results for Cases 1-3 (Three Column Process) where F1=F2=3.0.

Numerical results are tabulated in Table III, along with the separation factor, α. The separation factor is described in the Results section for the two-column process.

The higher separation factor yields the better separation of the proteins. Therefore for the three-column process, the cases will be listed with the best case first and the rest ranked accordingly.

1) Cases 1-3 Batch, F1=F2=0
2) Case 2, F1=F2=3.0
3) Case 1, F1=F2=3.0
4) Case 3, F1=F2=3.0

This ranking includes only those cases which this author has worked on. Also, it only includes the best results for each case.

CHAPTER IV. CONCLUSIONS

Comparison of Tables II and III in Appendix 1 show that overall, the three-column process yields better separations than the two-column process. The batch case (F1=F2=0.0) for the three-column process yielded a separation factor of 12.11 whereas for the two-column one it was only 6.47. Also, for each continuous case in Table III(3 Column Results), the values are all higher than separation factors obtained for the cases in Table II (2 Column Results), except for the batch case in Table II.

For the 10 continuous cases and 2 batch cases examined in this work the overall results were as follows (with the best separation obtained being ranked first):

		Separation Factor
1)	3-Column Process, Batch Case, F1=F2=0.0	12.11
2)	3-Column Process, Continuous Case #2, F1=F2=3.0	8.78
3)	2-Column Process, Batch Case, F1=F2=0.0	6.47
4)	3-Column Process, Continuous Case #1, F1=F2=3.0	6.10
5)	3-Column Process, Continuous Case #3, F1=F2=3.0	5.89
6)	2-Column Process, Continuous Case #1, F1=F2=3.0	4.82
7)	2-Column Process, Continuous Case #7, F1=F2=3.0	4.72
8)	2-Column Process, Continuous Case #4, F1=F2=3.0	4.46

	Separation Factor
9) 2-Column Process, Continuous Case #2, F1=F2=3.0	4.38
10) 2-Column Process, Continuous Case #6, F1=F2=3.0	4.15
11) 2-Column Process, Continuous Case #5, F1=F2=3.0	4.11
12) 2-Column Process, Continuous Case #3, F1=F2=3.0	2.78

APPENDIX 1

TABLES

Table I

GIVEN DATA READ INTO PROGRAMS (2&3 Column Cases) *

Constant or Variable	What the constant or variable represents	Its initial value
M	Constant used for DoLoop calculations	2
NCYCL	Number of cycles of pump operation	40
YHAO YAAO YHCO YACO	Values not given here since these constants were not used in any program in this thesis	
V	Volume of fluid phase, cm^3	12.000
VDEAD	Dead volume of fluid phase, cm^3	10.000
VB	Volume of solid phase, cm^3	4.000
HAKP1	Equilibrium constant for Hemoglobin at a pH level of P_1 (anionic)	3.000
HCKP1	Equilibrium constant for Hemoglobin at a pH level of P_1 for a cationic ion exchanger	1.000
AAKP1	Equilibrium constant for Albumin at a pH level of P_1 for an anionic ion exchanger	2.500
ACKP1	Equilibrium constant for Albumin at a pH level of P_1 for a cationic ion exchanger	1.500
HAKP2	Equilibrium constant for Hemoglobin at a pH level of P_2 for an anionic ion exchanger	1.000
HCKP2	Equilibrium constant for Hemoglobin at a pH level of P_2 for a cationic ion exchanger	2.000

Constant or Variable	What the Constant or Variable represents	Its initial value
AAKP2	Equilibrium constant for Albumin at a pH level of P_2 for an anionic ion exchanger	2.500
ACKP2	Equilibrium constant for Albumin at a pH level of P_2 for a cationic ion exchanger	1.500
HAKP3	Equilibrium constant for Hemoglobin at a pH level of P_3 for an anionic ion exchanger	1.000
HCKP3	Equilibrium constant for Hemoglobin at a pH level of P_3 for a cationic ion exchanger	2.000
AAKP3	Equilibrium constant for Albumin at a pH level of P_3 for an anionic ion exchanger	1.000
ACKP3	Equilibrium constant for Albumin at a pH level of P_3 for a cationic ion exchanger	4.500

* P_1= High pH level
P_2= Middle pH level
P_3= Low pH level

Table II

Separation Factors for Cases 1-7 (Two Column Process)

Case #	YHRS1(1,40)	YARS1(3,40)	YHRS1(3,40)	YARS1(1,40)	$\alpha^* = \frac{YHRS1(1,40)*YARS1(3,40)}{YHRS1(3,40)*YARS1(1,40)}$
1-7) F1=F2=0.0	1.4812	1.4405	0.6049	0.5455	6.47
1) F1=F2=3.0	1.2714	1.2775	0.6091	0.5527	4.82
F1=F2=6.0	1.2279	1.2427	0.6513	0.5902	3.97
F1=F2=9.0	1.1996	1.2184	0.6834	0.6200	3.45
F1=F2=12.0	1.1778	1.1985	0.7077	0.6434	3.10
2) F1=F2=3.0	1.0996	1.8442	0.5601	0.8275	4.38
F1=F2=6.0	1.0434	1.8753	0.5805	0.8963	3.76
F1=F2=9.0	1.0189	1.8563	0.5954	0.9233	3.44
F1=F2=12.0	1.0048	1.8347	0.6052	0.9381	3.25
3) F1=F2=3.0	0.9720	1.6263	0.6304	0.9004	2.78
F1=F2=6.0	0.9616	1.4653	0.7119	0.9629	2.06
F1=F2=9.0	0.9619	1.3590	0.7546	0.9790	1.77
F1=F2=12.0	0.9633	1.2935	0.7798	0.9877	1.62
4) F1=F2=3.0	1.3444	1.6151	0.6910	0.7039	4.46
F1=F2=6.0	1.2532	1.5282	0.7244	0.7278	3.63
F1=F2=9.0	1.2006	1.4617	0.7461	0.7408	3.18
F1=F2=12.0	1.1664	1.4171	0.7614	0.7513	2.89
5) F1=F2=3.0	1.2997	1.3938	0.6653	0.6623	4.11
6) F1=F2=3.0	1.3064	1.2833	0.6267	0.6453	4.15
7) F1=F2=3.0	1.2663	1.3870	0.6504	0.5722	4.72

* (α = separation factor)

TABLE III

Three-Column Process, Cases 1-3, Separation Factors

Case #	YHRS1(1,40)	YARS1(4,40)	YHRS1(4,40)	YARS1(1,40)	α^*
1-3 F1=F2=0.0	2.1268	1.5843	0.4220	0.6595	12.11
1 F1=F2=3.0	1.5292	1.3075	0.5063	0.6470	6.10
2 F1=F2=3.0	3.0957	1.0354	0.7213	0.5059	8.78
3 F1=F2=3.0	1.5122	1.4162	0.5431	0.6692	5.89

$$\alpha^* = \frac{YHRS1(1,40)*YARS1(4,40)}{YHRS1(4,40)*YARS1(1,40)}$$

APPENDIX 2

FIGURES

Figure I

The Effects of Different PH's of Protein A on a Cationic and Anionic Ion Exchanger

The Isoelectric point of A= I_A , where $P_2 < I_A < P_1$. Also:

At P_2- A has a net positive charge. (A+)
At P_1- A has a net negative charge. (A-)

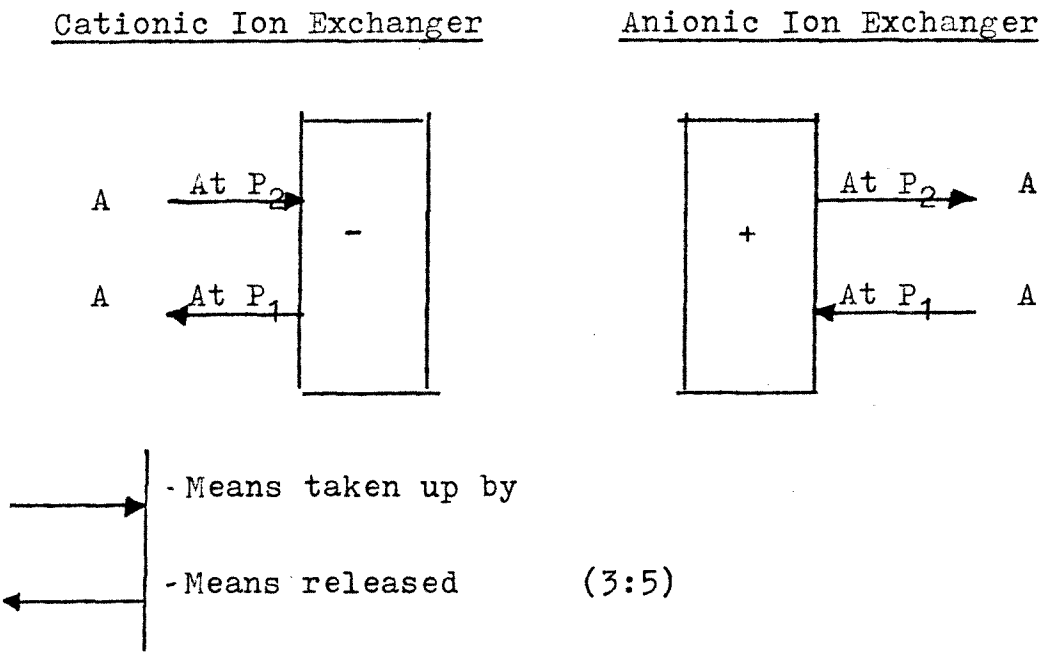

(3:5)

Figure II

A Simple One-Column, Four Stage Separation Example

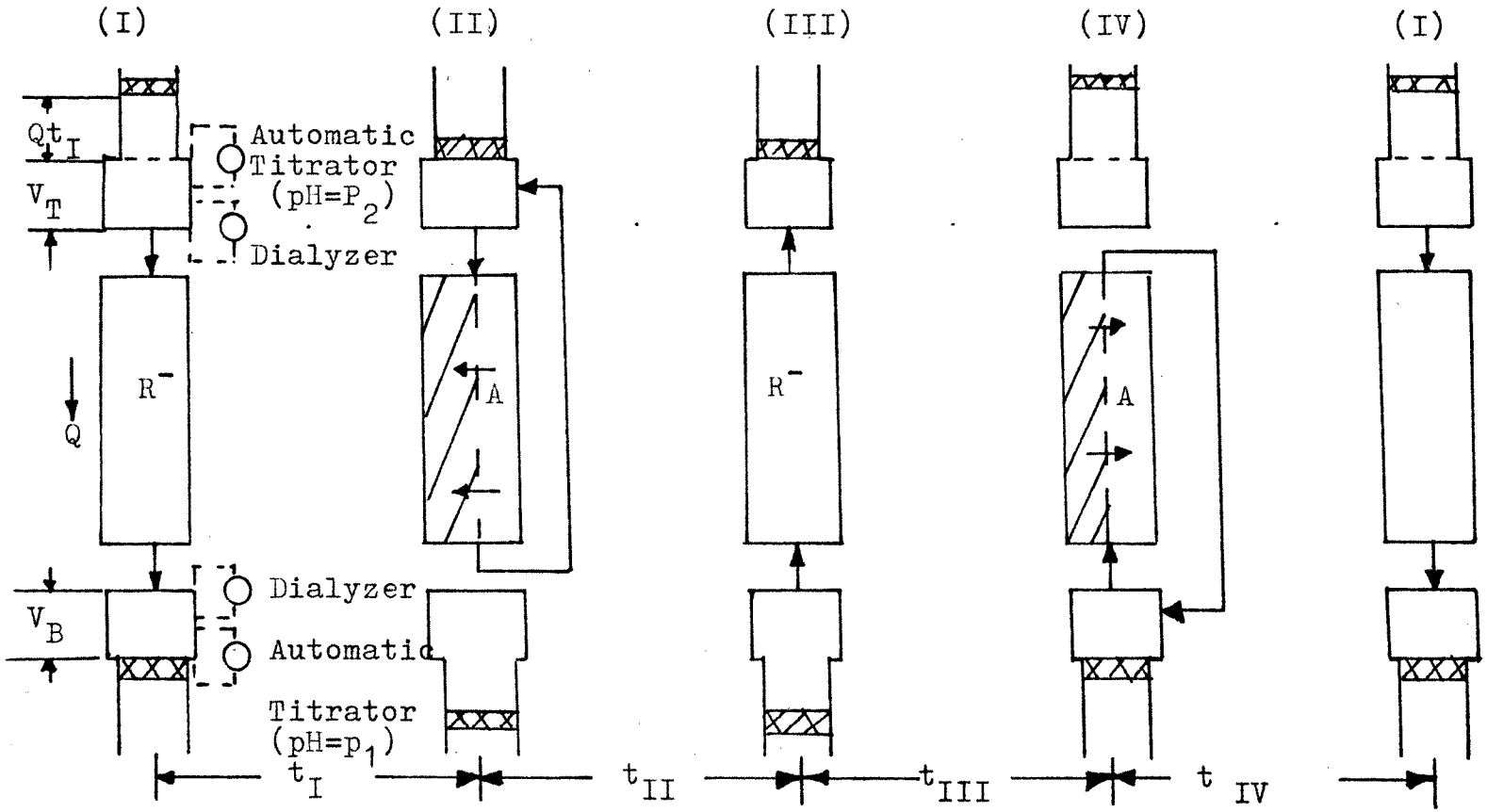

Chen, H.T., et al. "Separation of Proteins via Multicolumn pH Parametric Pumping."

= The ion exchanger(solid gel) (2:321)

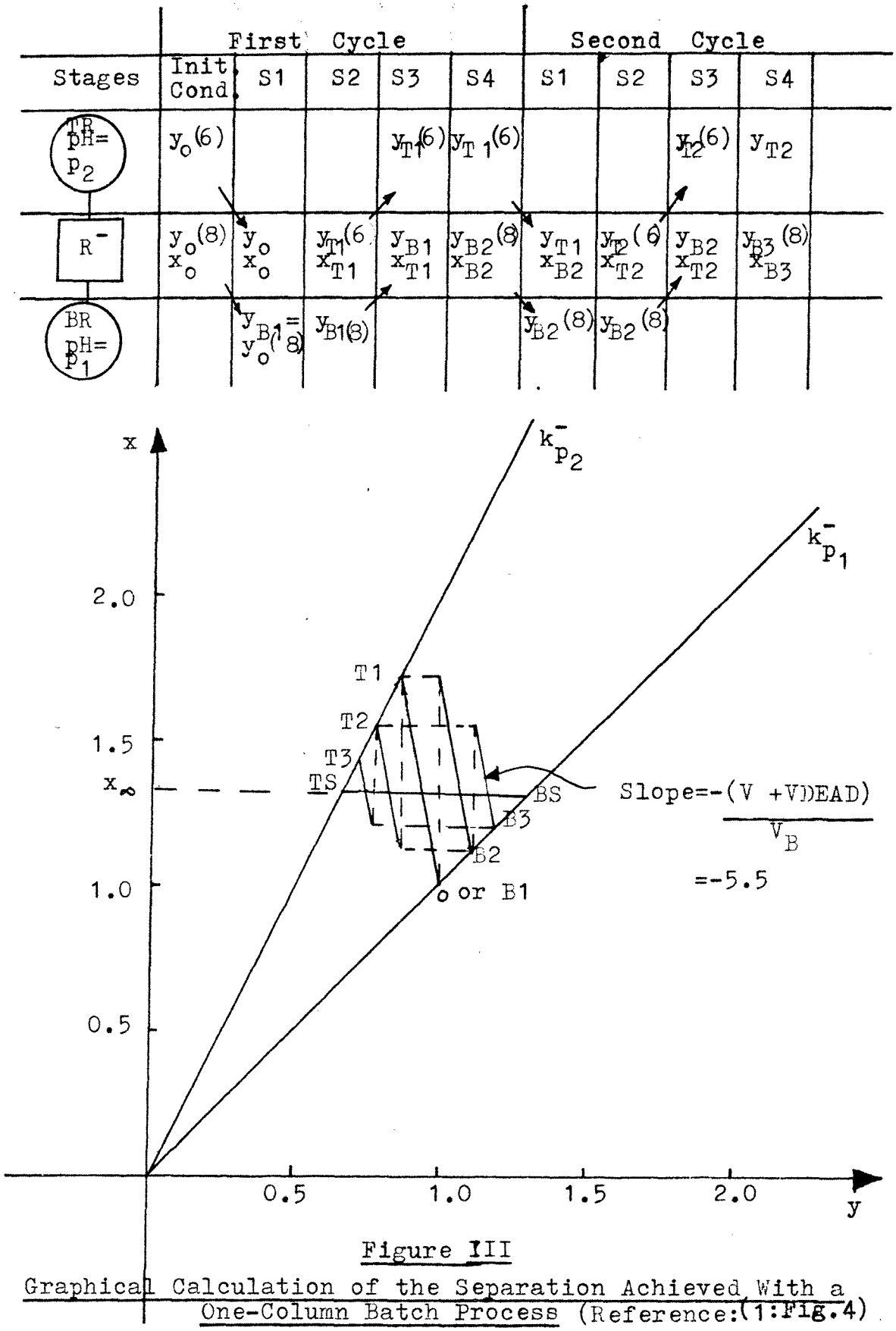

Figure III

Graphical Calculation of the Separation Achieved With a One-Column Batch Process (Reference: (1:Fig.4)

Figure1y

Graphical Results of Computer Simulation of Two-Column Process for:

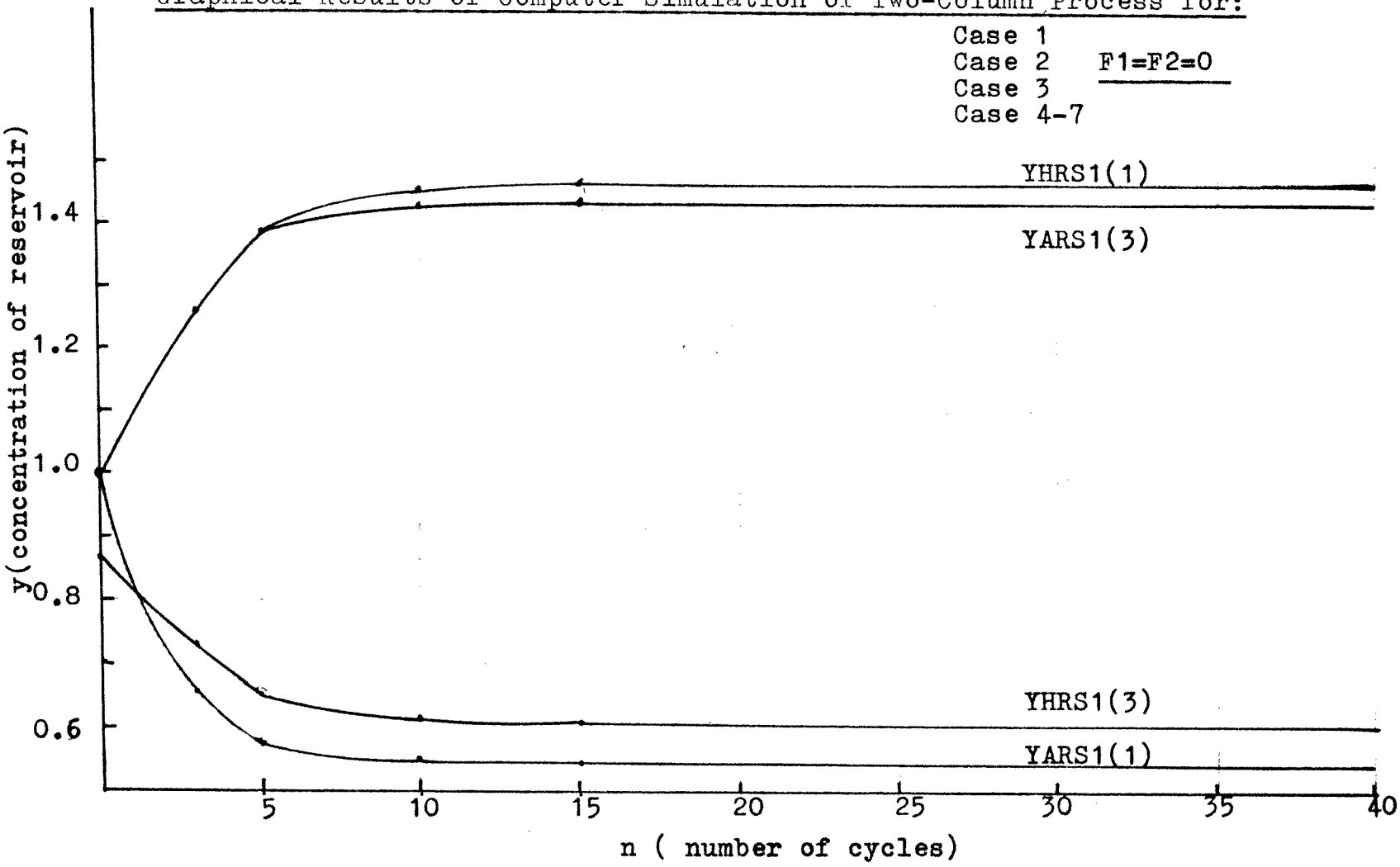

Figure V

Graphical Results of Computer Simulation of Two-Column Process

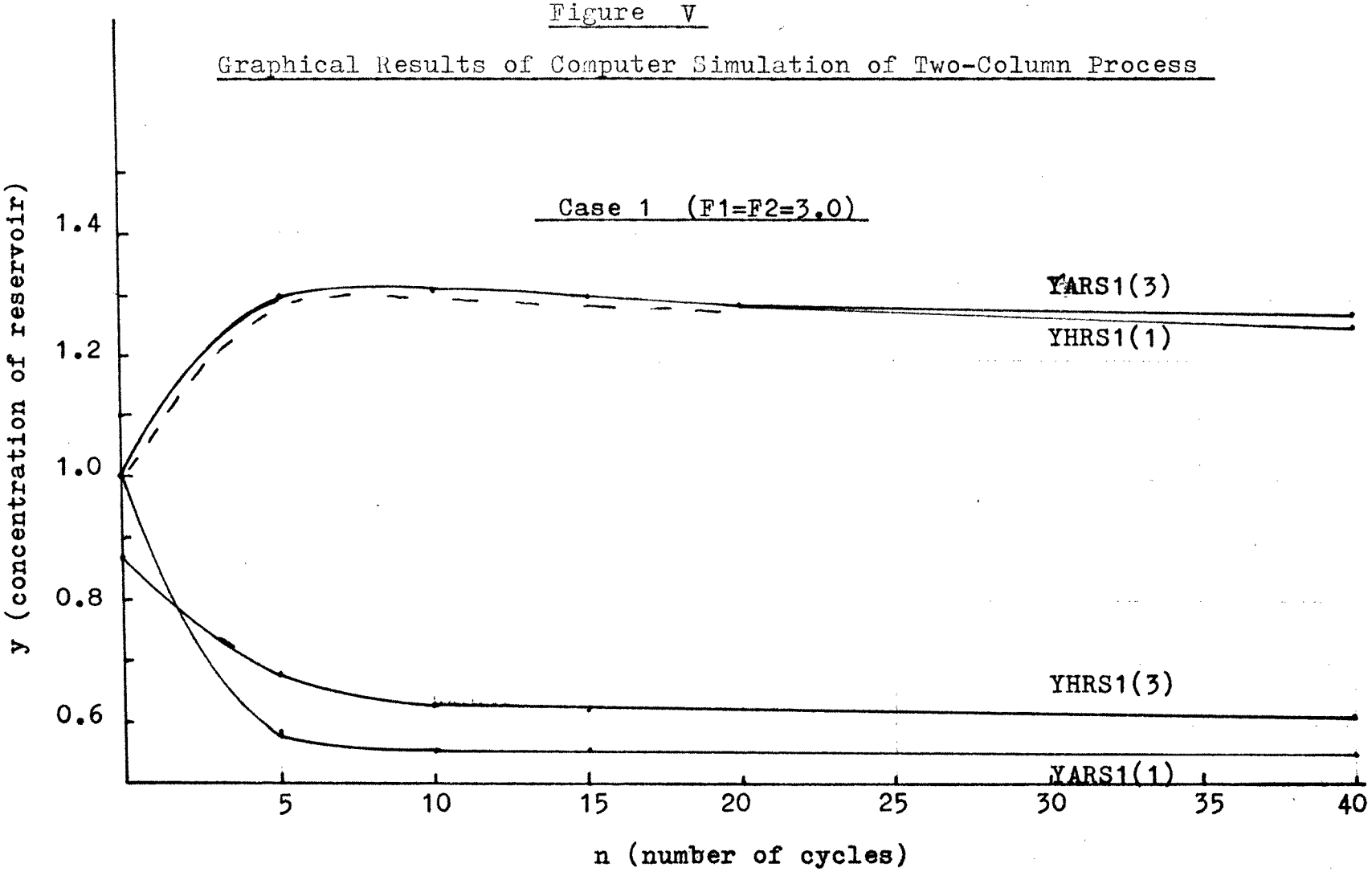

Figure VI

Graphical Results of Computer Simulation of Two-Column Process

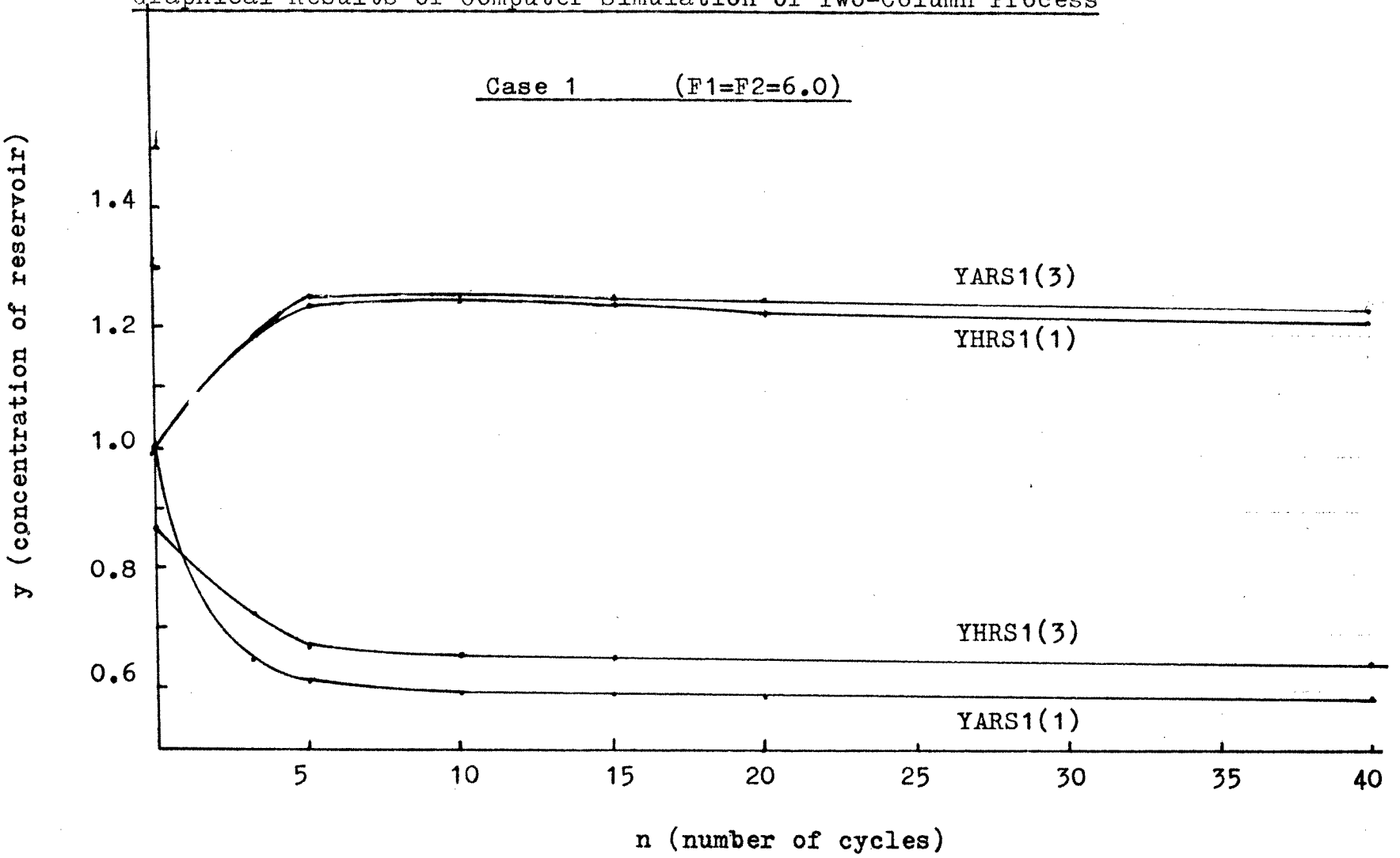

Figure VII

Graphical Results of Computer Simulation of Two-Column Process

Case 1 (F1=F2=9.0)

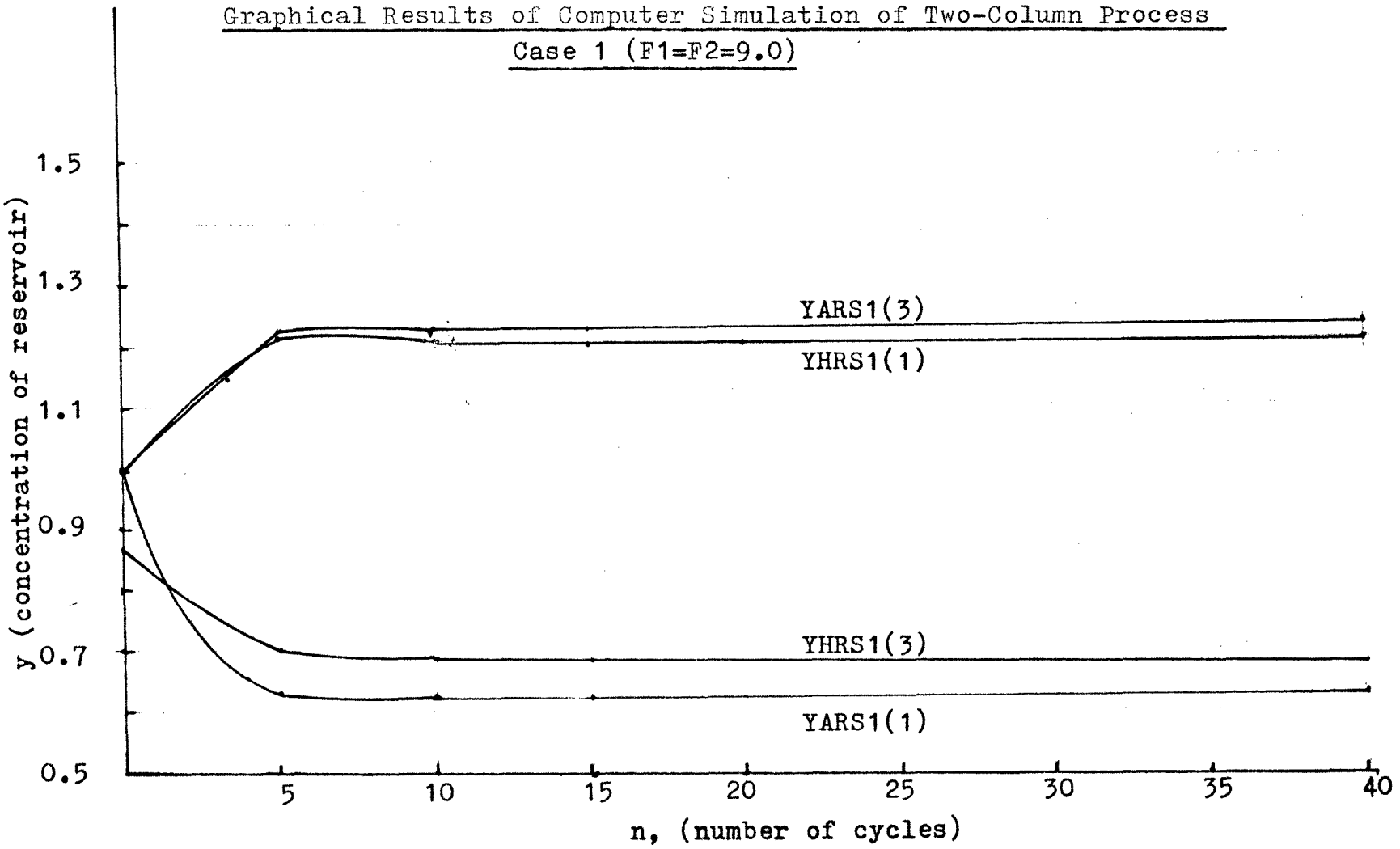

FigureVIII

Graphical Results of Computer Simulation of Two-Column Process

Case 1 (F1=F2=12.0)

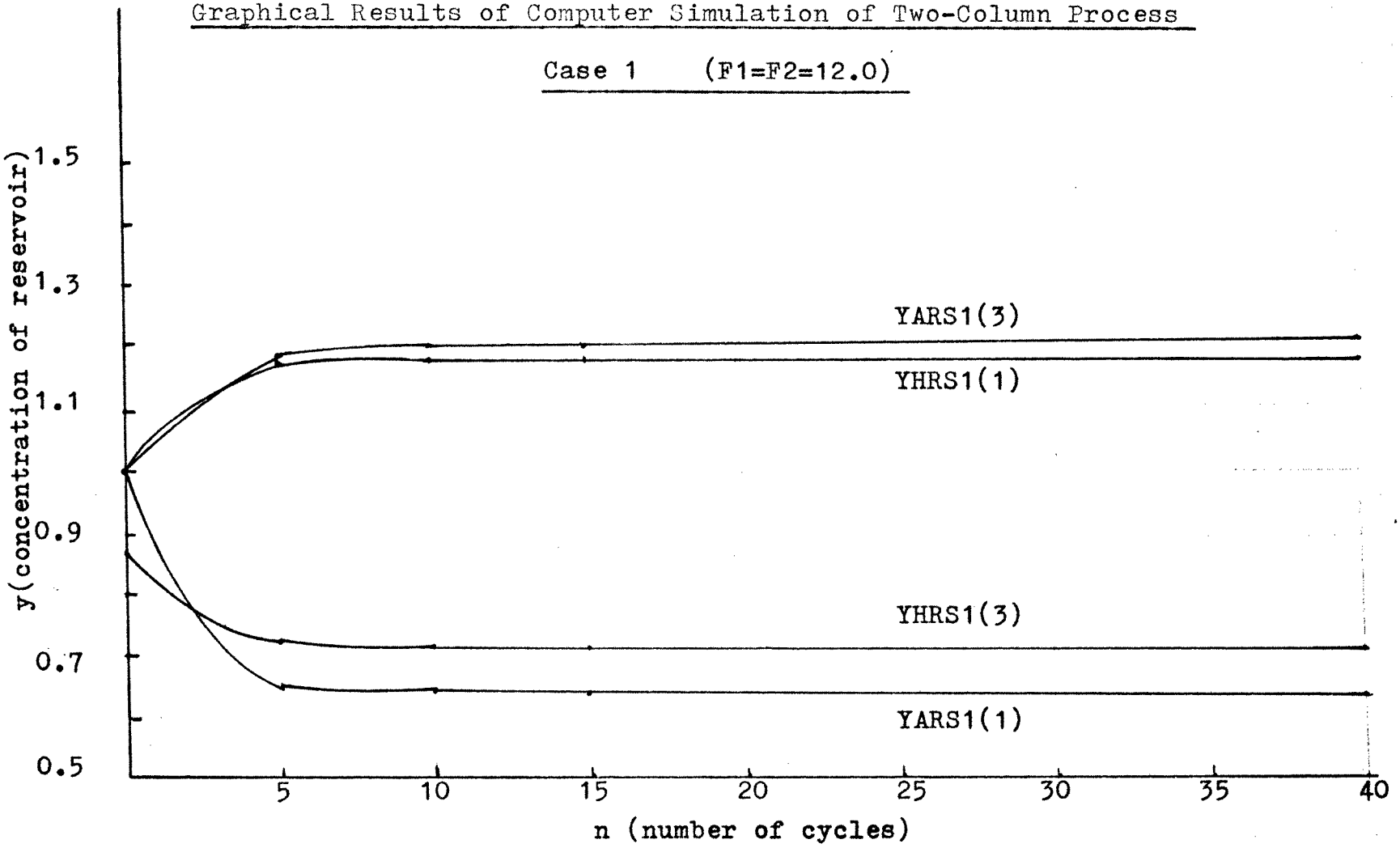

Figure IX

Graphical Results of Computer Simulation of Two-Column Process
Case 2 (F1=F2=3.0)

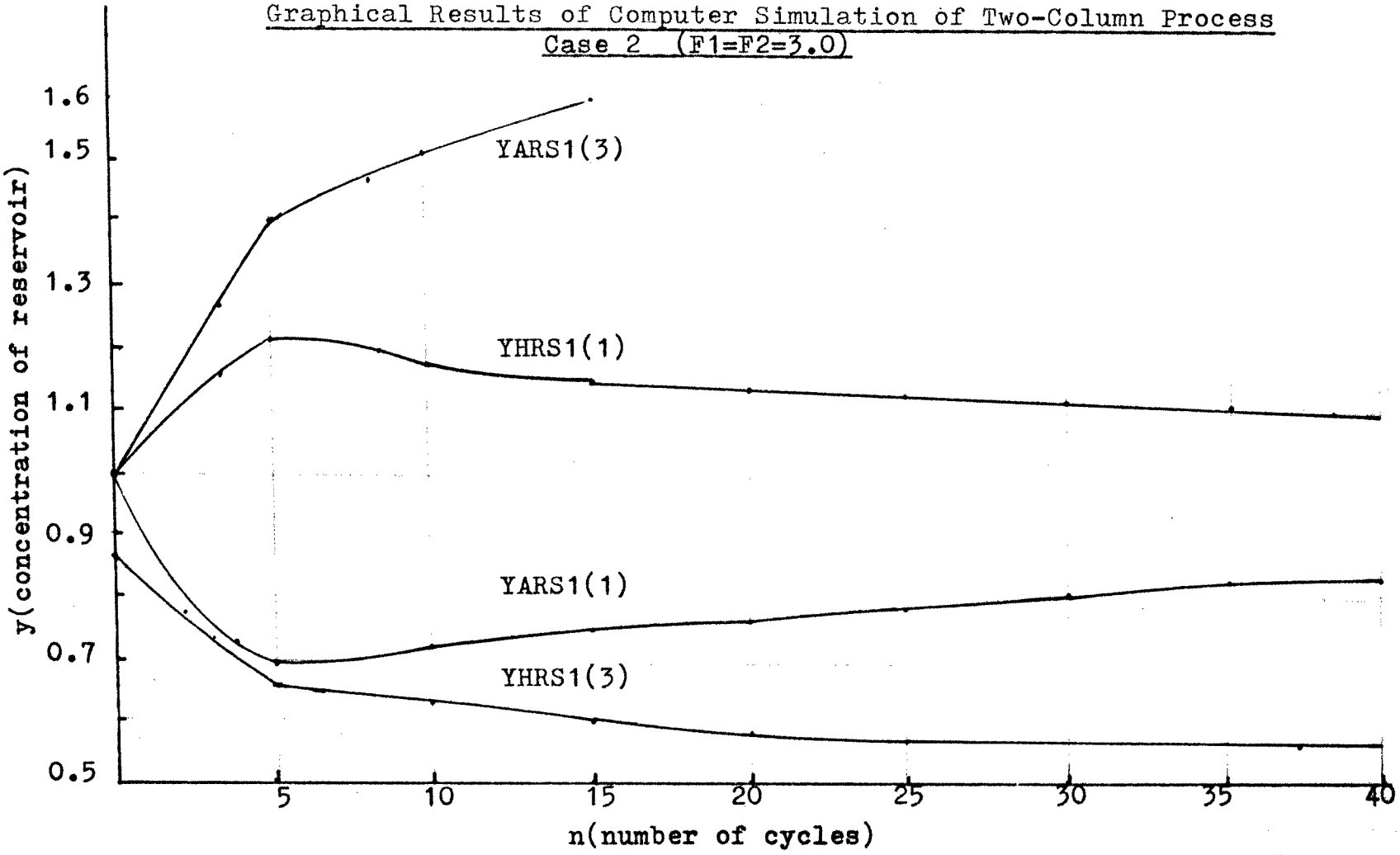

Figure X

Graphical Results of Computer Simulation of Two-Column Process

Case 2(F1=F2=6.0)

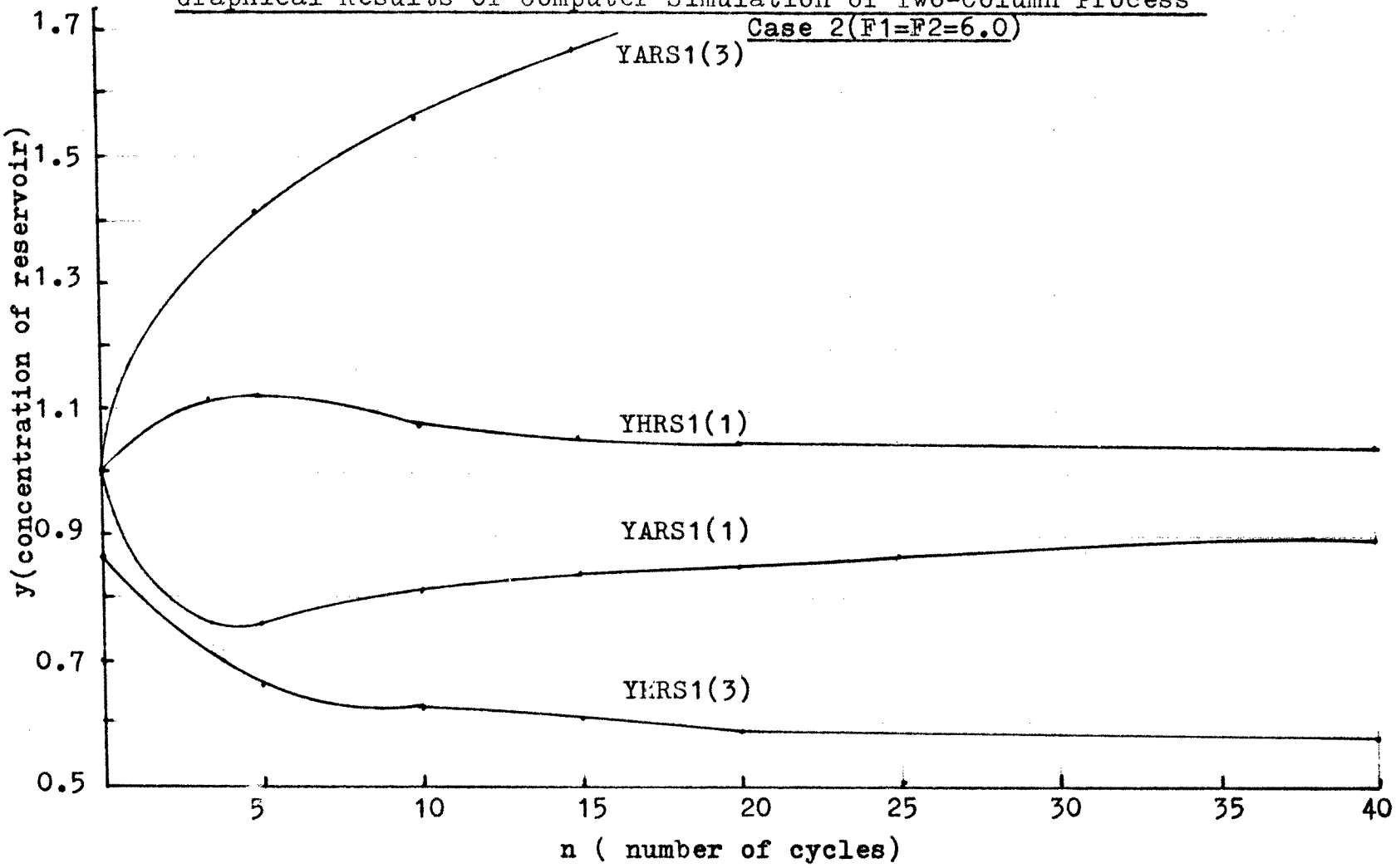

Figure XI

Graphical Results of Computer Simulation of Two-Column Process

Case 2 (F1=F2=9.0)

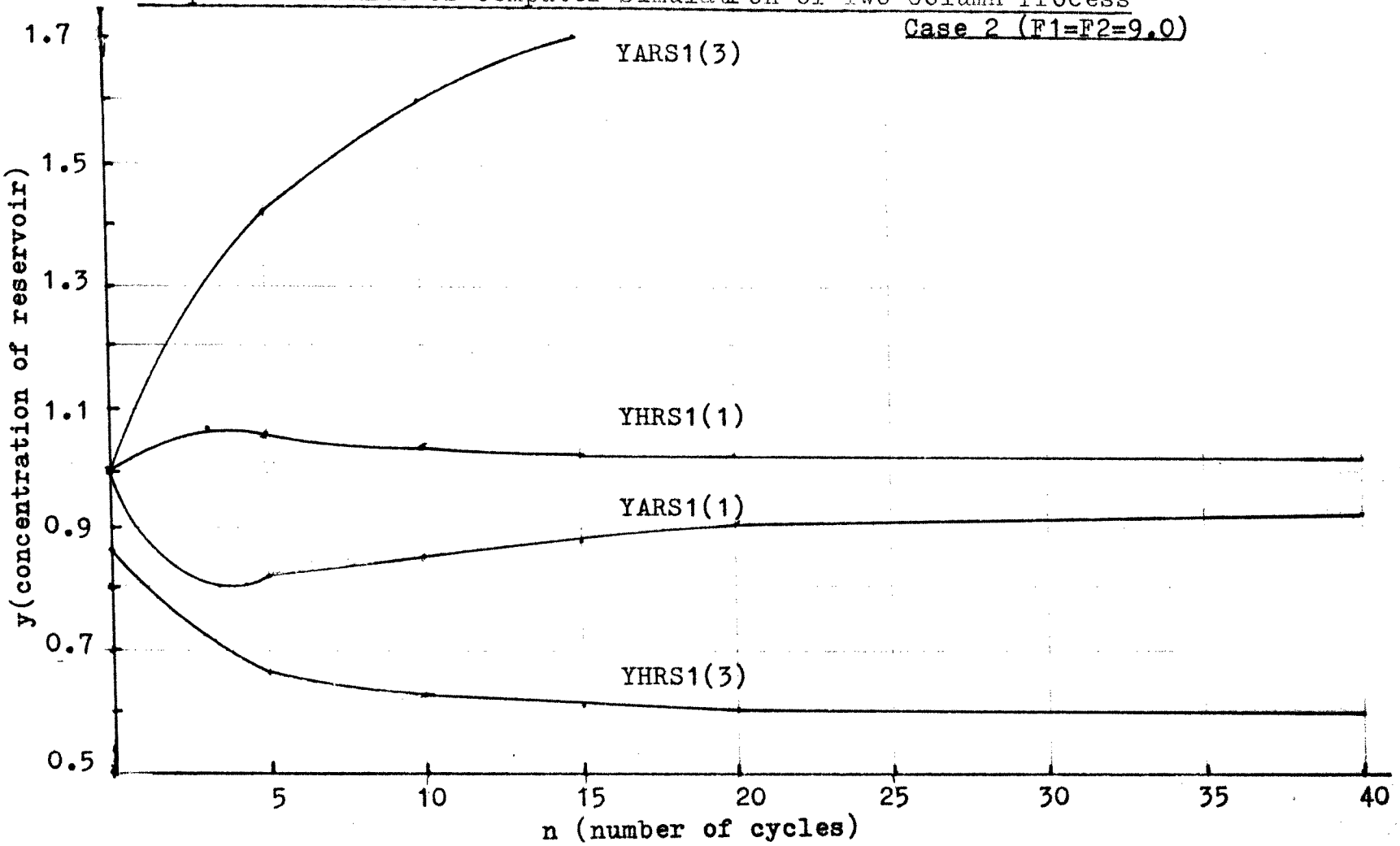

Figure XII

Graphical Results of Computer Simulation of Two-Column Process

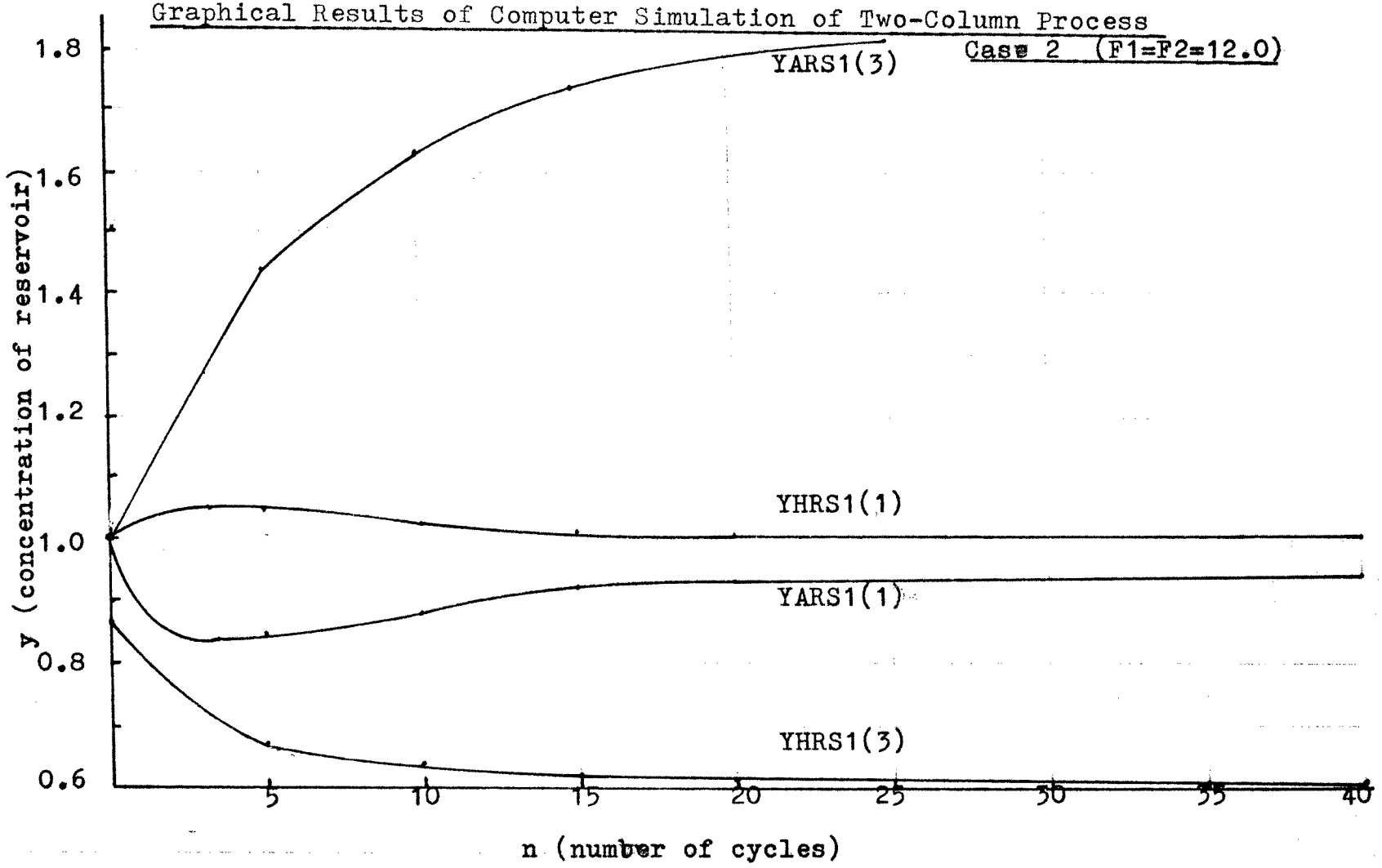

Figure XIII

Graphical Results of Computer Simulation of Two-Column Process
Case 3 (F1=F2=3.0)

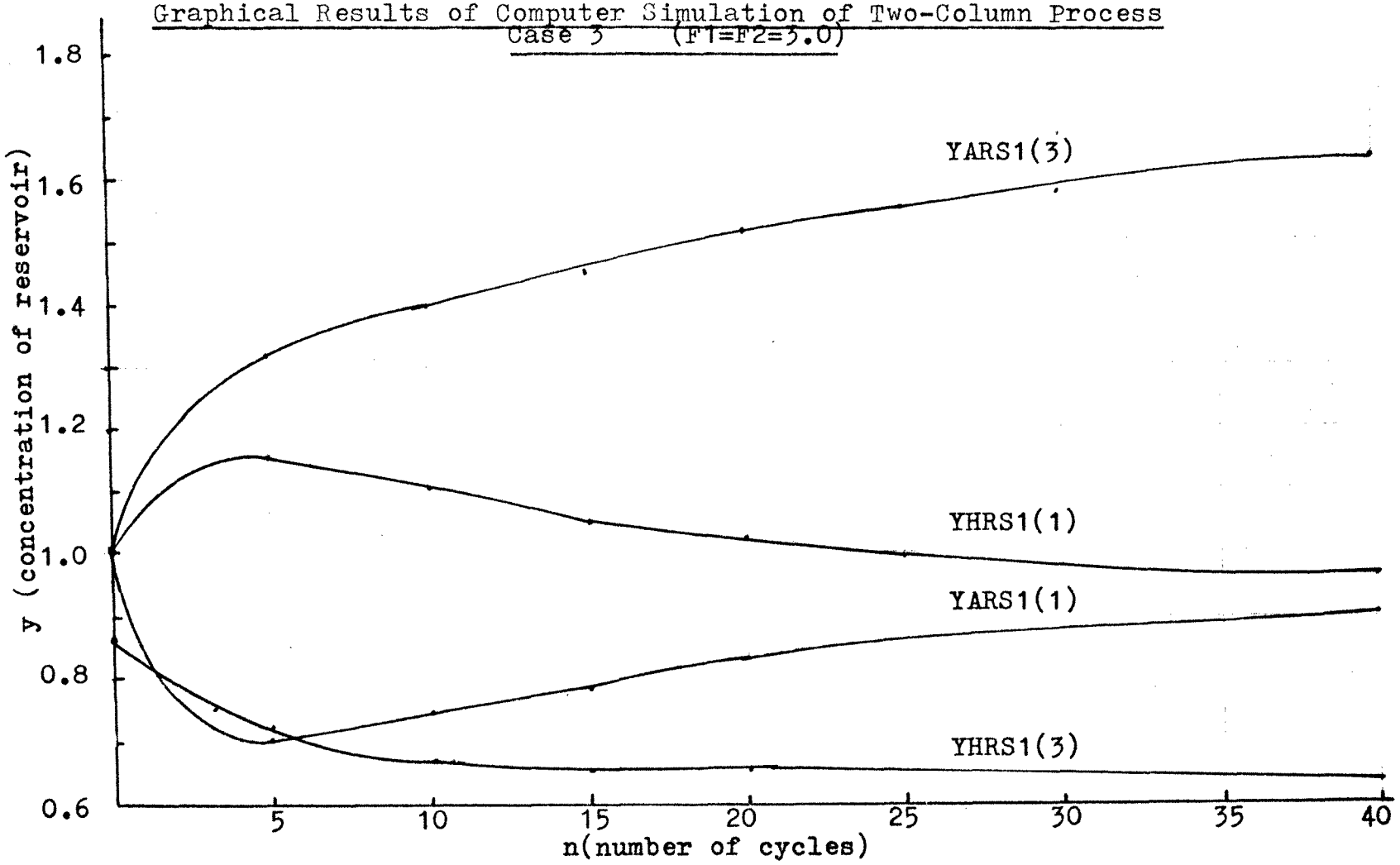

Figure XIV

Graphical Results of Computer Simulation of Two-Column Process

Case 3 (F1=F2=6.0)

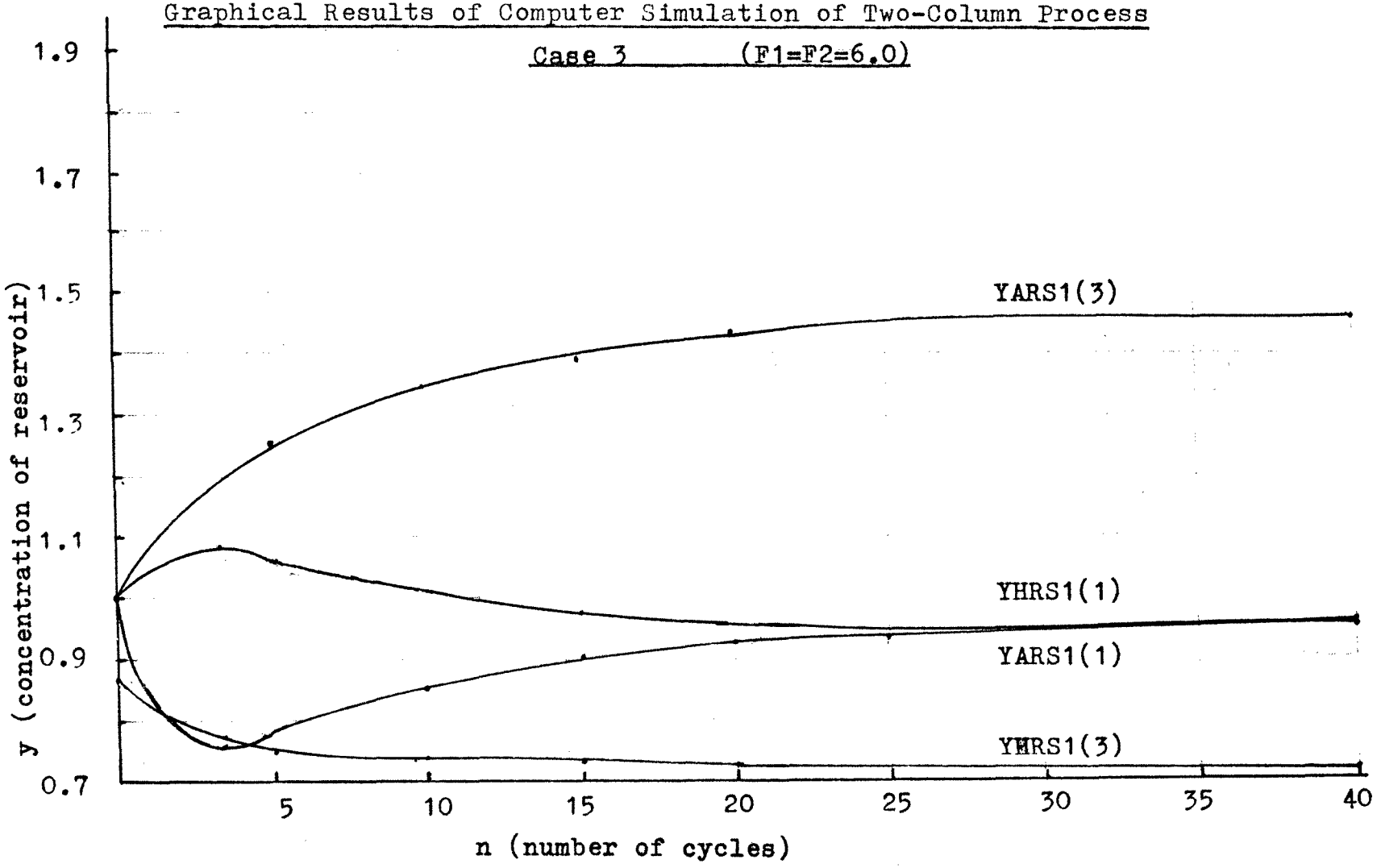

Figure XV

Graphical Results of Computer Simulation of Two-Column Process
Case 3 (F1=F2=9.0)

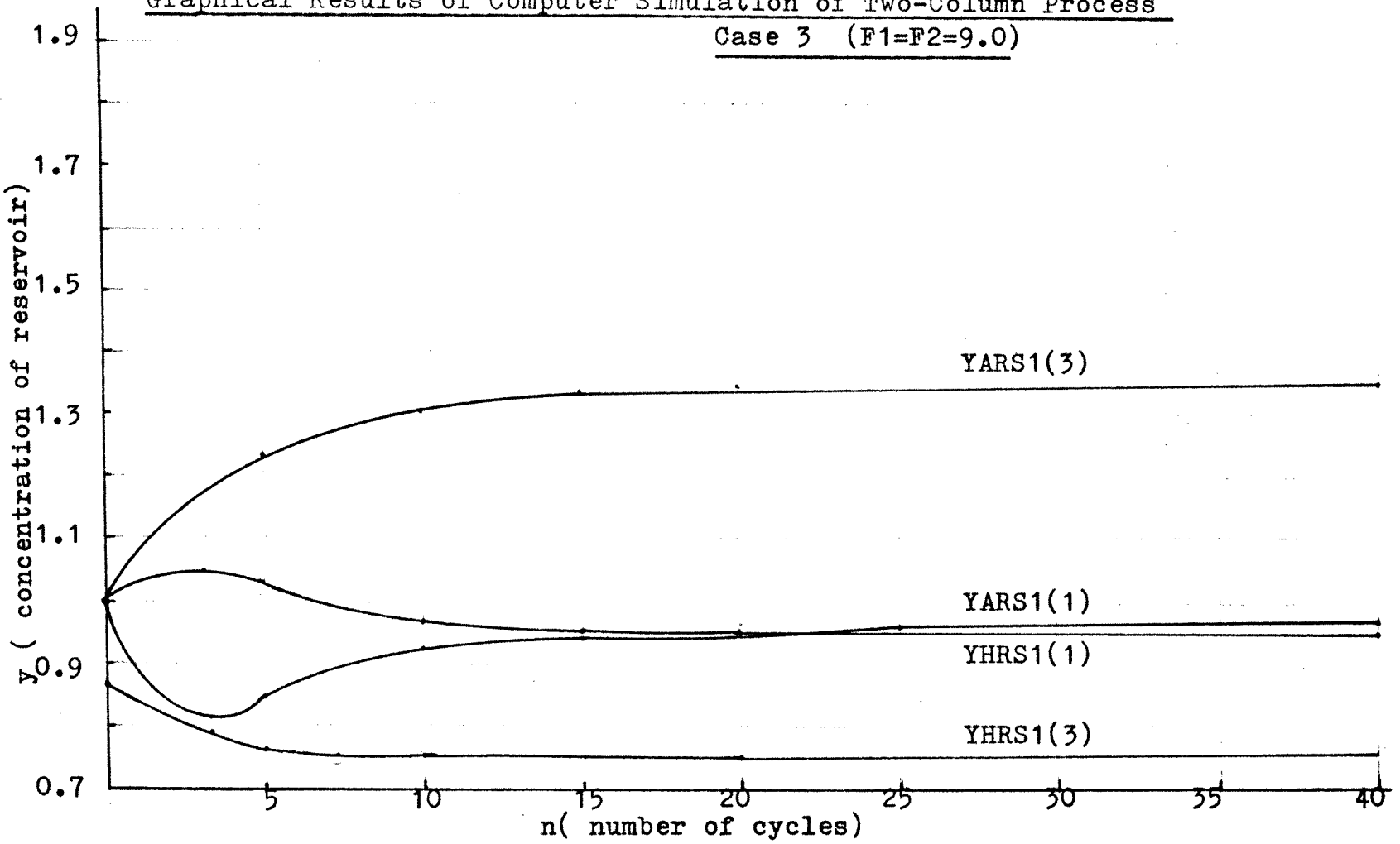

Figure XVI

Graphical Results of Computer Simulation of Two-Column Process

Case 3 (F1=F2=12.0)

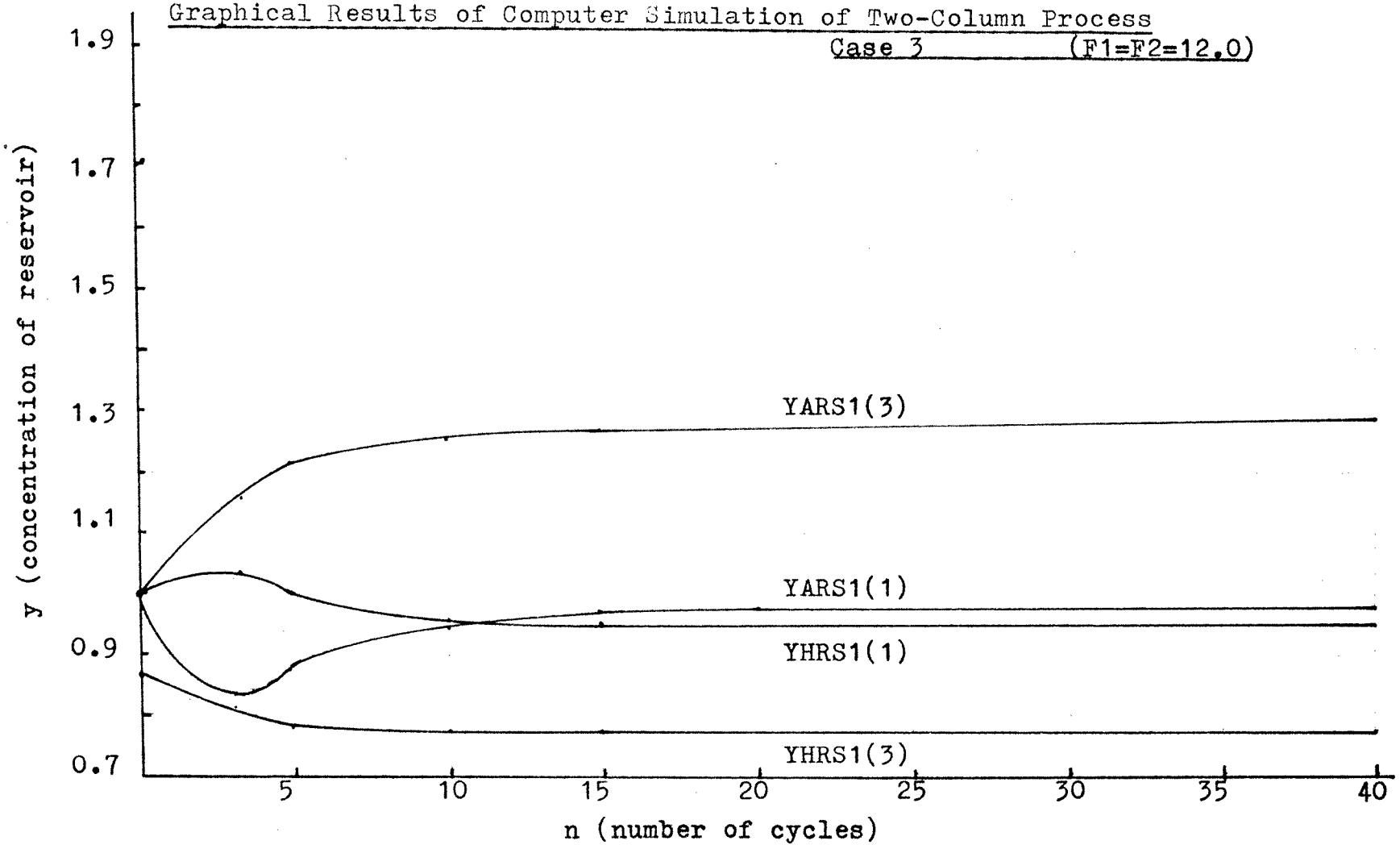

Figure XVII

Graphical Results of Computer Simulation of Two-Column Process
Case 4 (F1=F2=3.0)

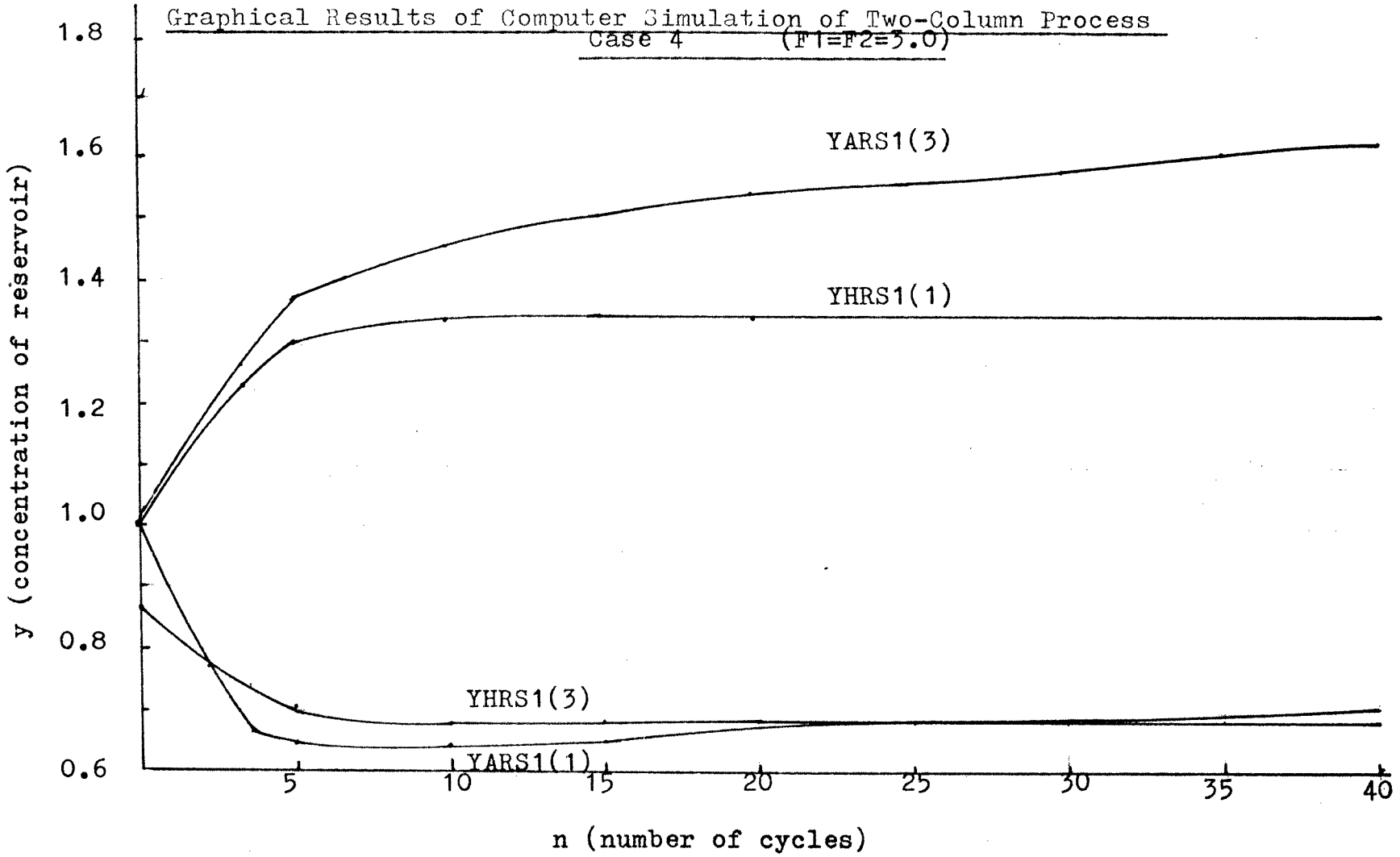

Figure XVIII

Graphical Results of Computer Simulation of Two-Column Process
Case 4 (F1=F2=6.0)

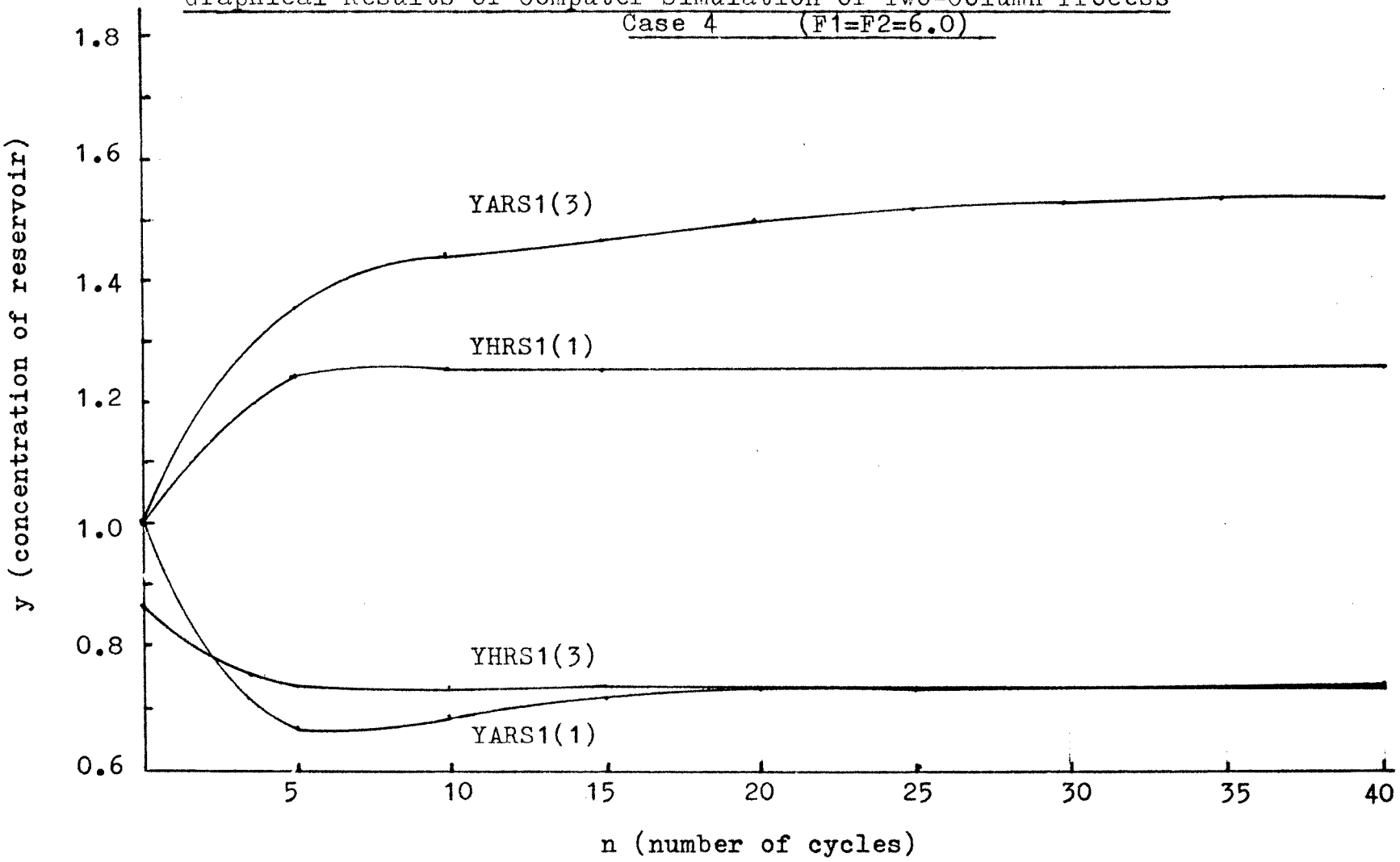

Figure XIX

Graphical Results of Computer Simulation of Two-Column Process

Case 4 ---- (F1=F2=9.0)

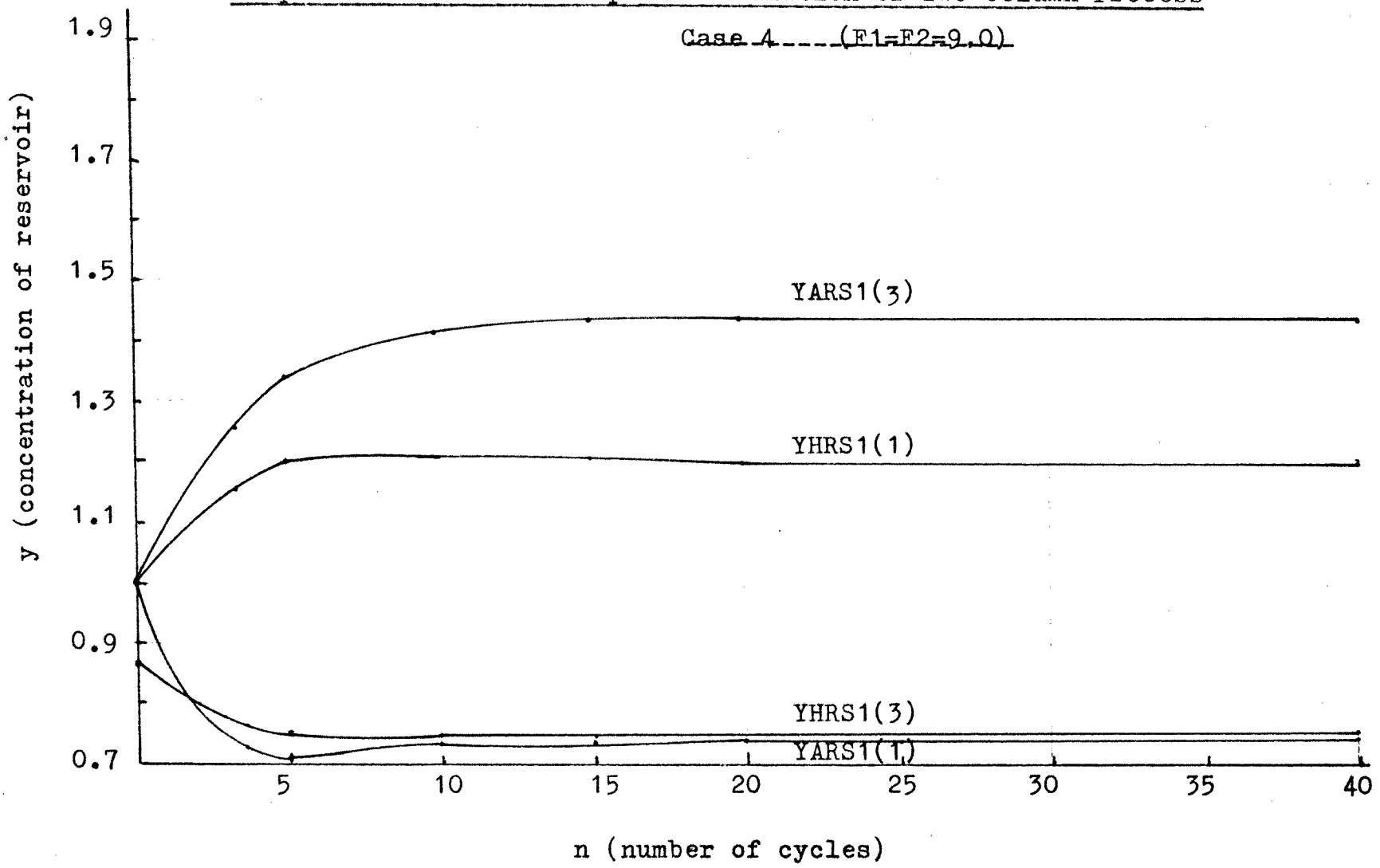

Figure XX

Graphical Results of Computer Simulation of Two-Column Process
Case 4 (F1=F2=12.0)

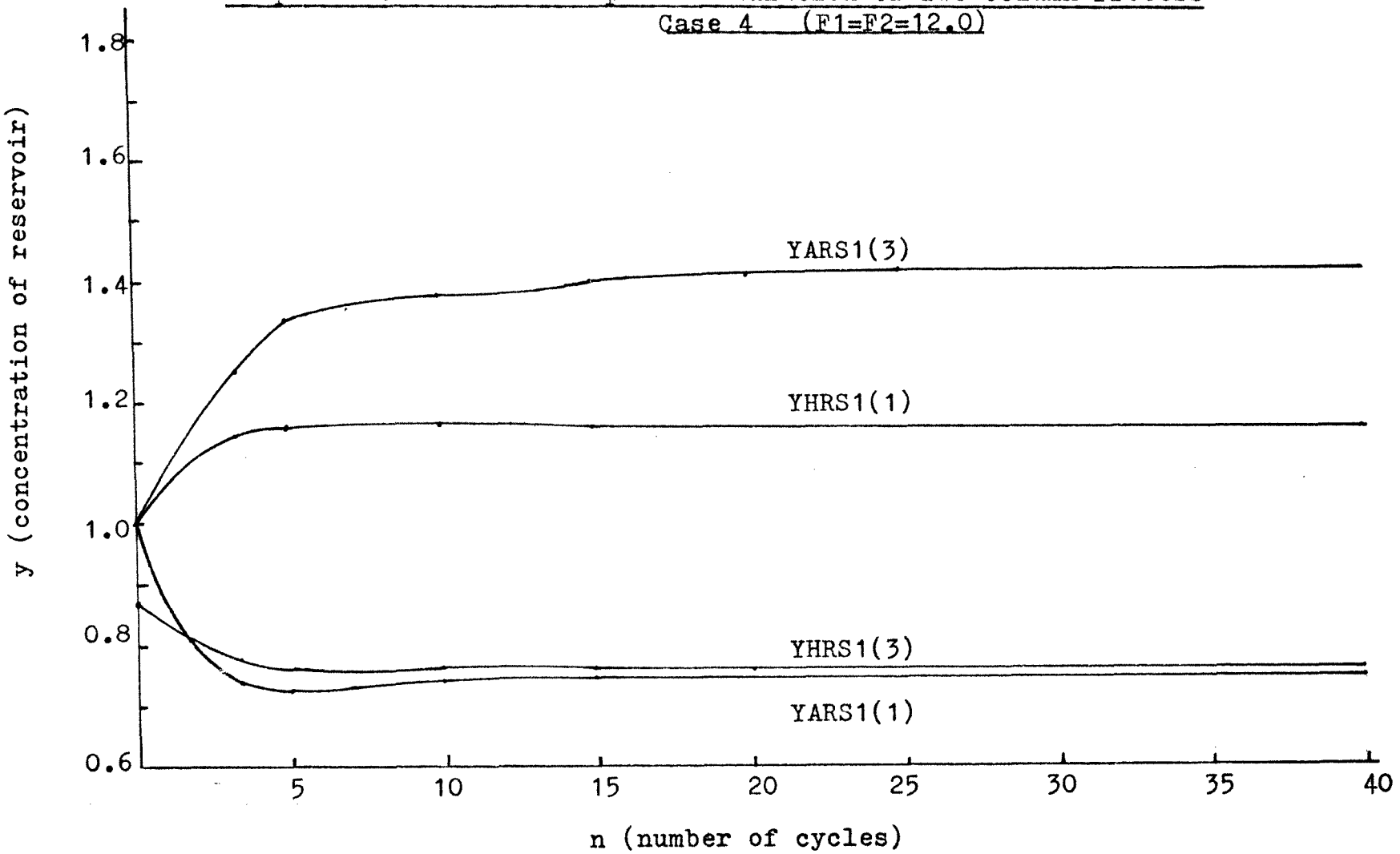

Figure XXI

Graphical Results of Computer Simulation of Two-Column Process

Case 5 (F1=F2=3.0)

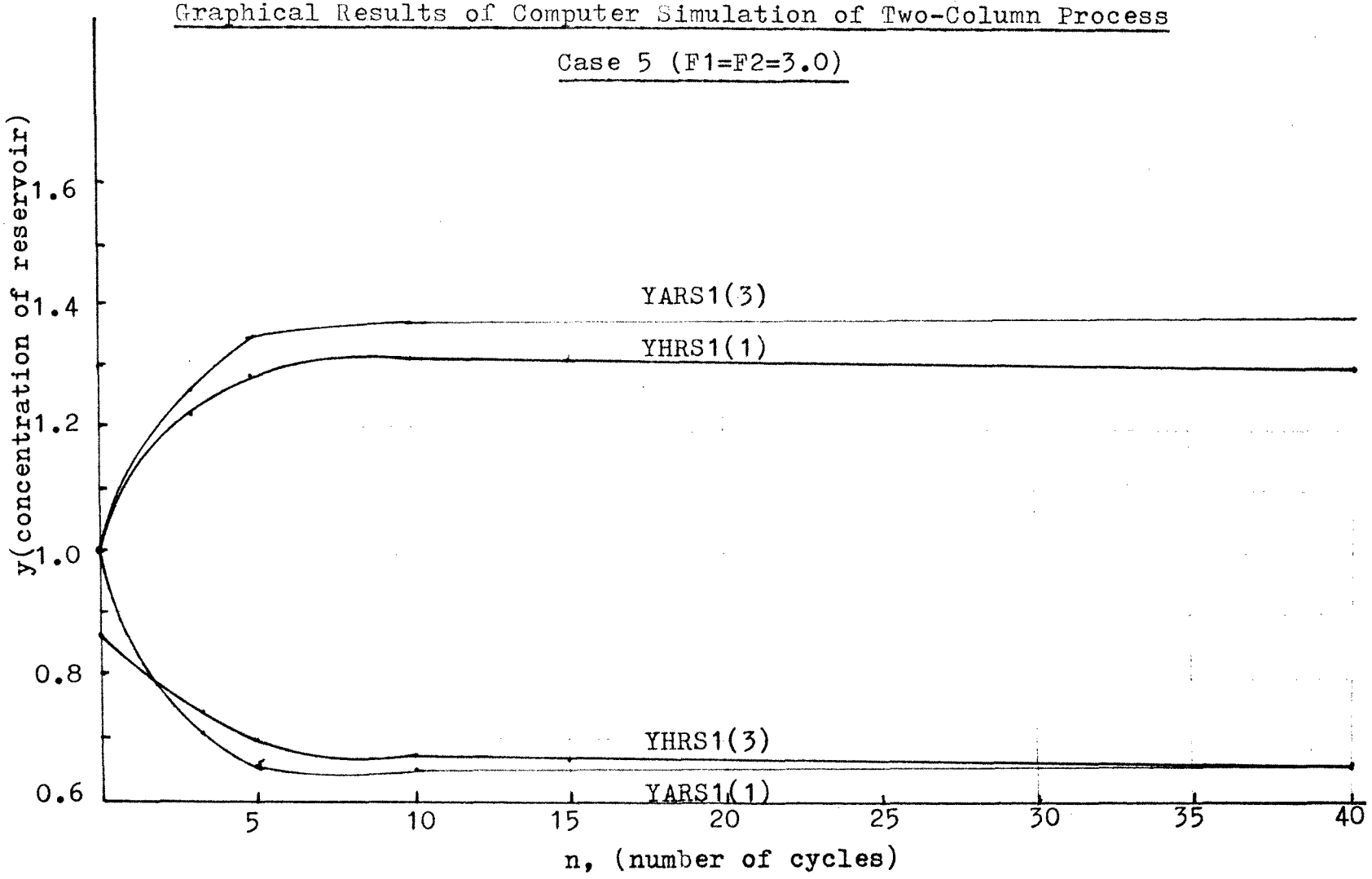

Figure XXII

Graphical Results of Computer Simulation of Two-Column Process

Case 6 (F1=F2=3.0)

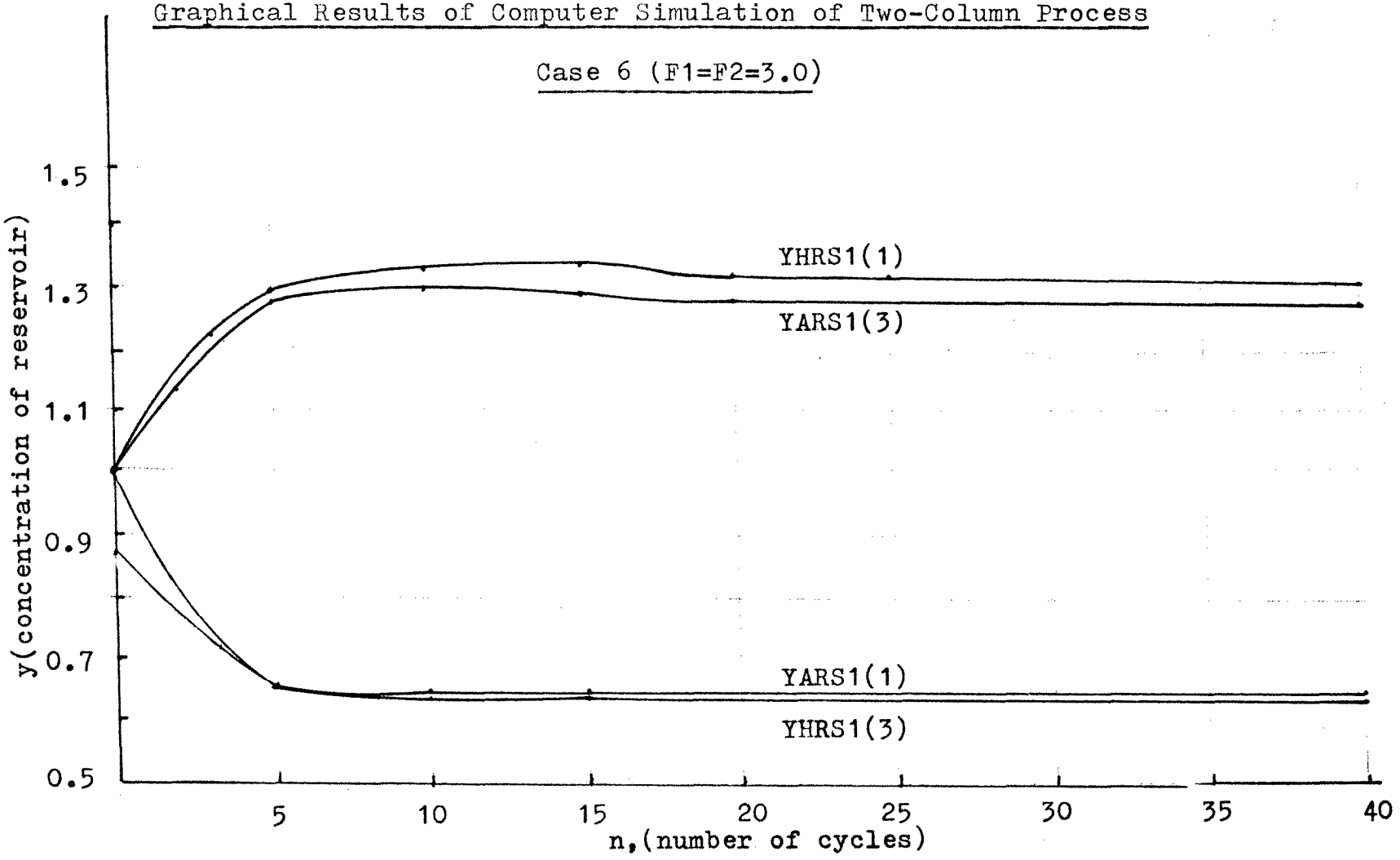

Figure XXIII

Graphical Results of Computer Simulation of Two-Column Process
Case 7 (F1=F2=3.0)

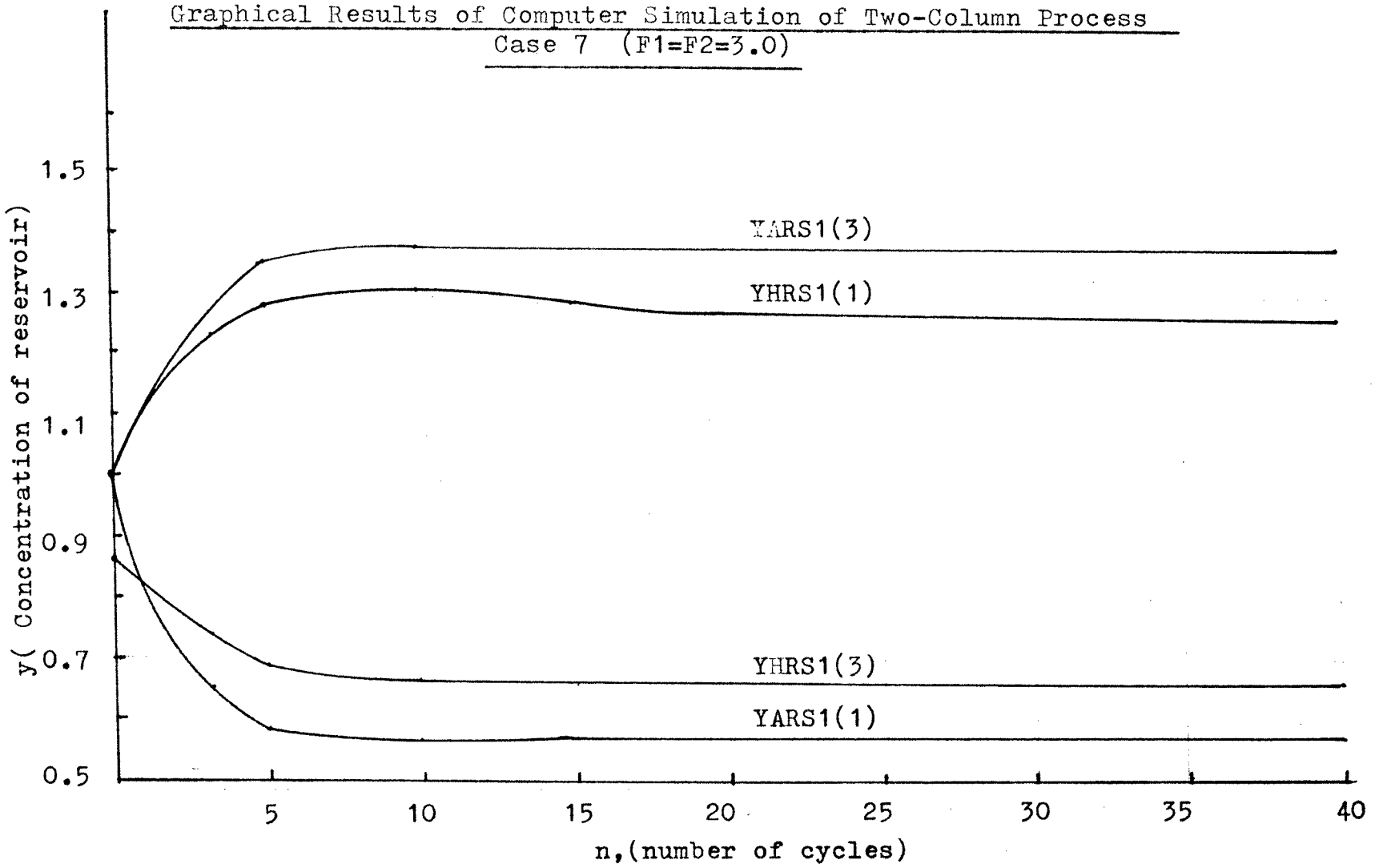

Figure XXIV

Graphical Results of Computer Simulation of Three-Column Process
Case 1-3 where F1=F2=0.0

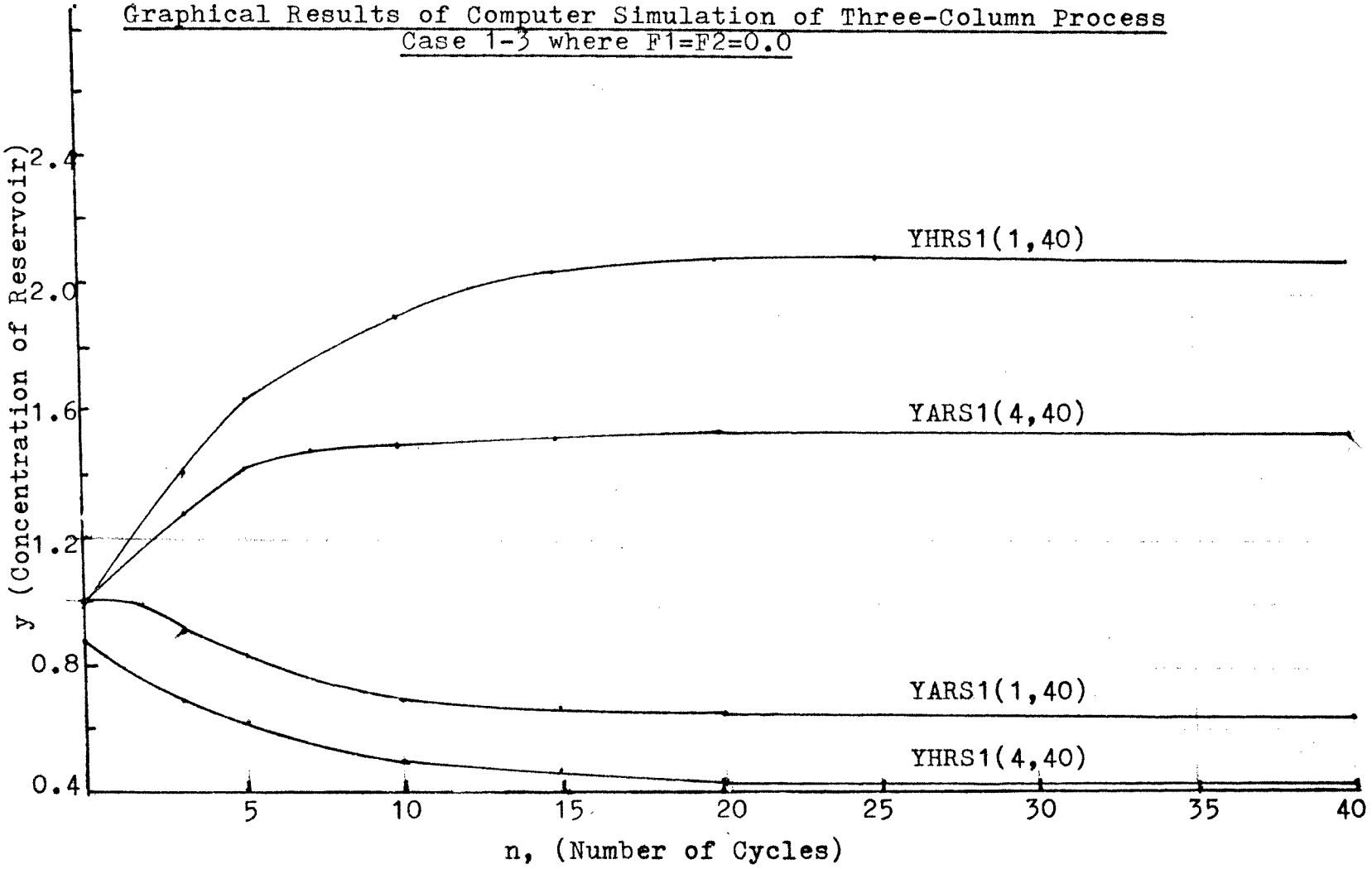

Figure XX V

Graphical Results of Computer Simulation of Three-Column Process

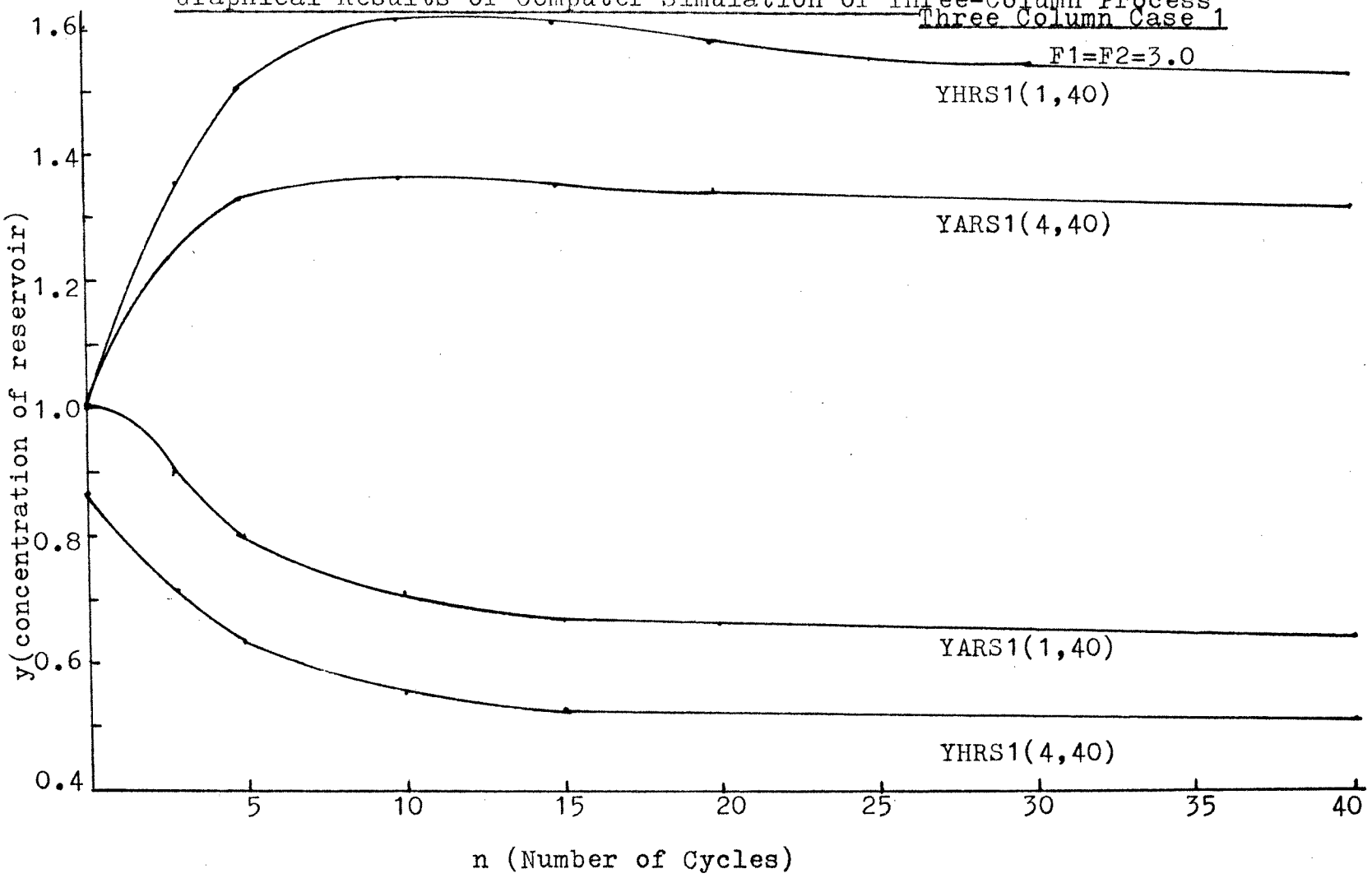

Figure XXVI

Graphical Results of Computer Simulation of Three Column Process

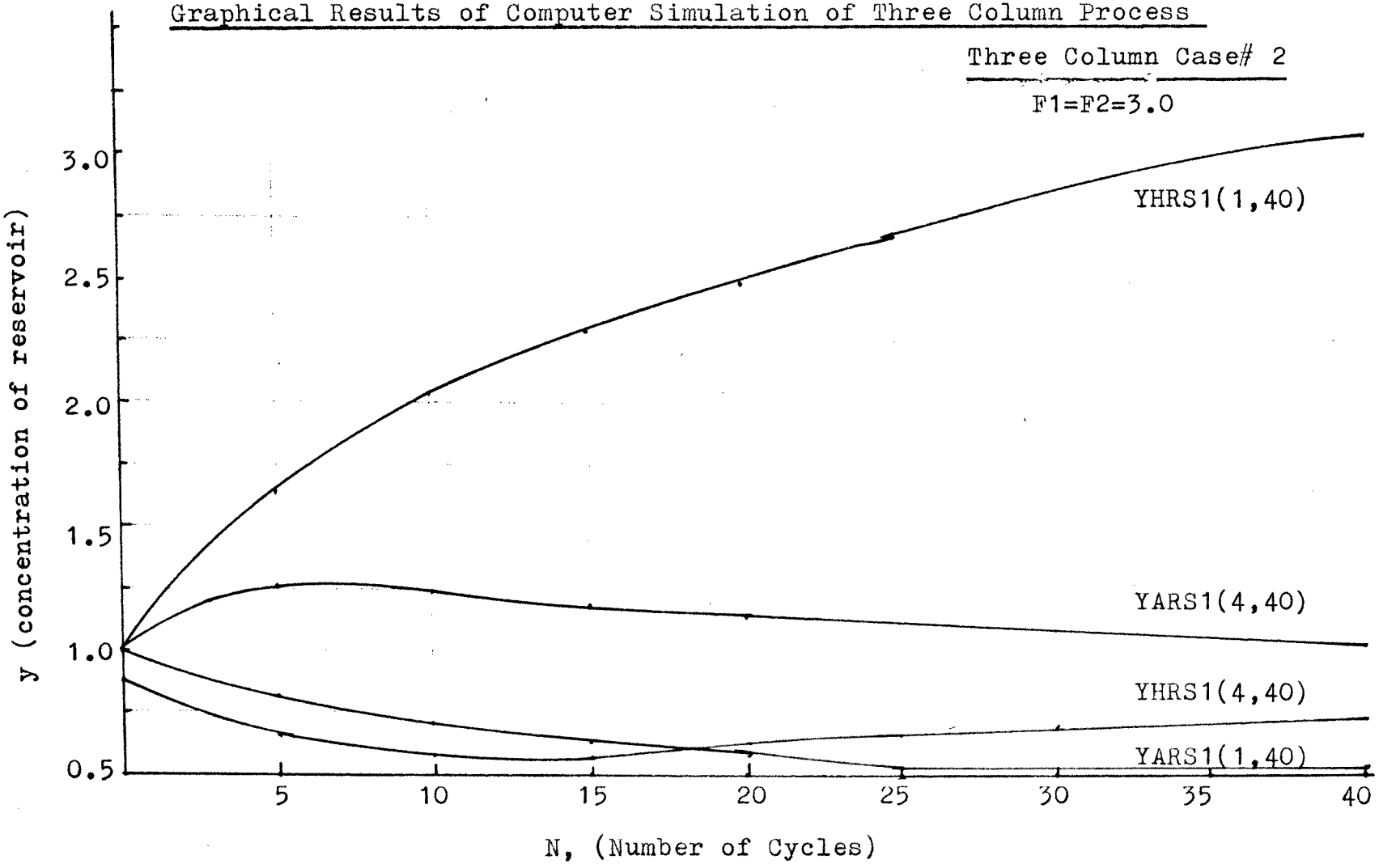

Figure XXVII

Graphical Results of Computer Simulation of Three-Column Process

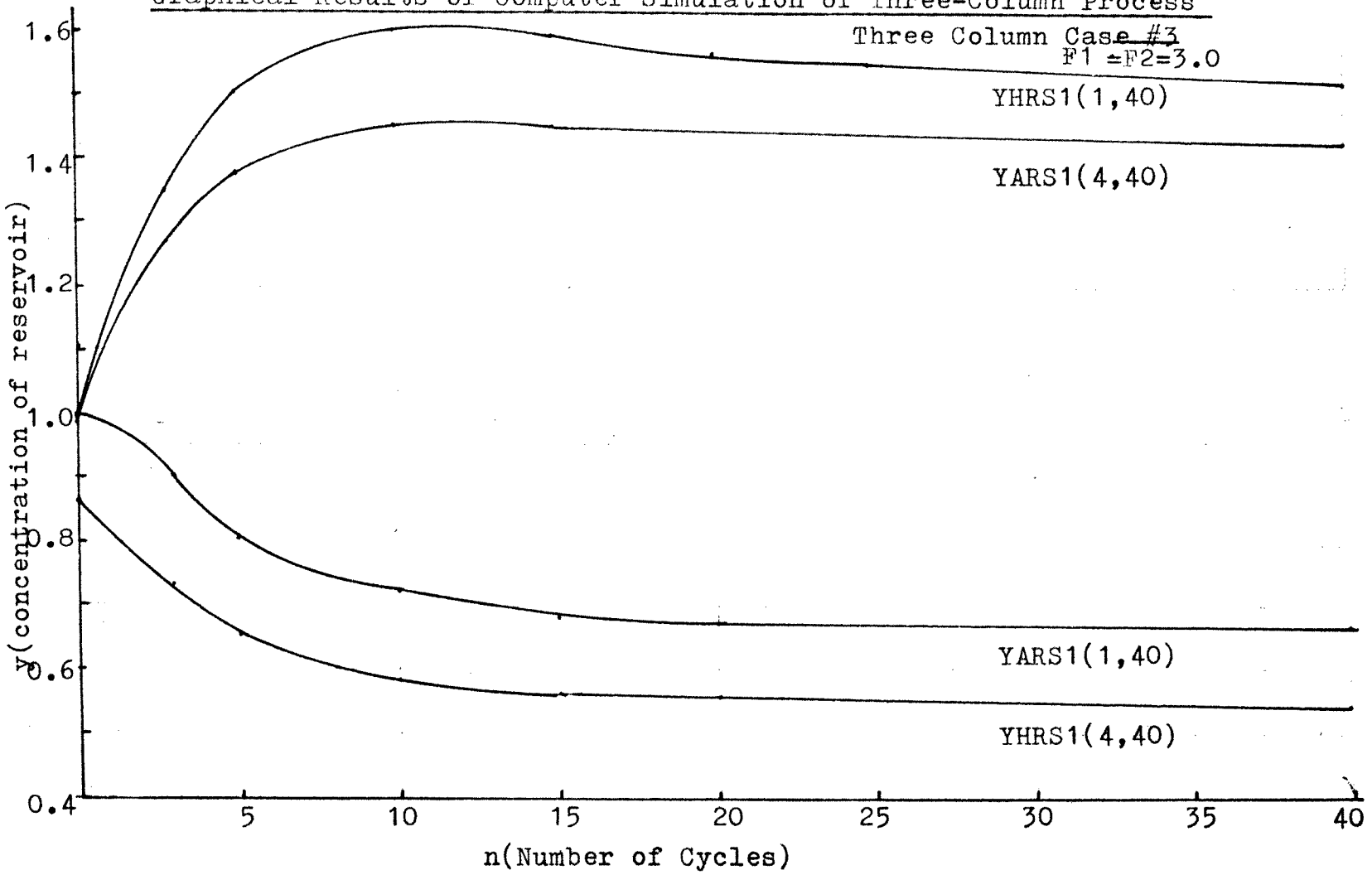

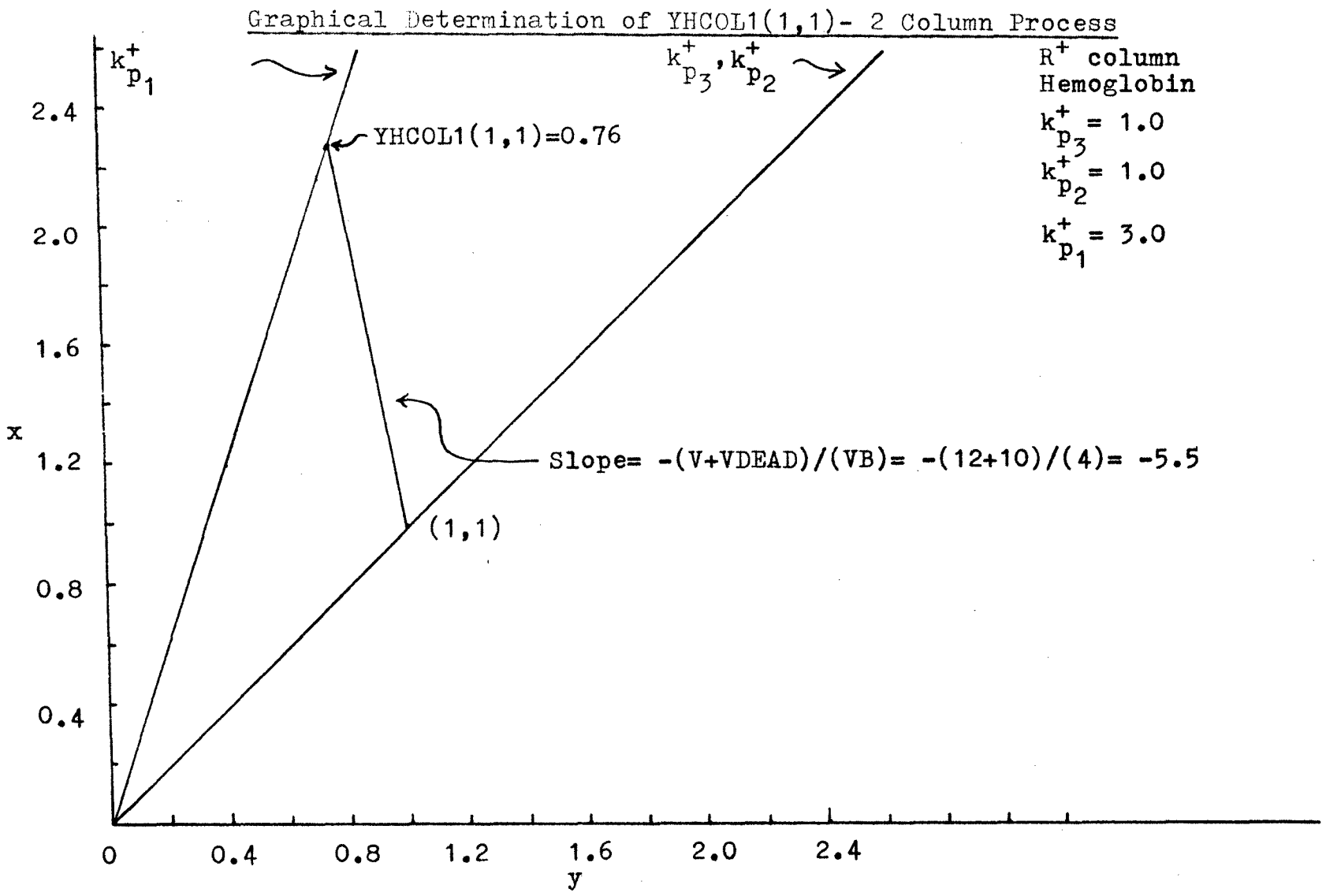

Figure XXVIII

Graphical Determination of YACOL1(1,1)- 2 Column Process

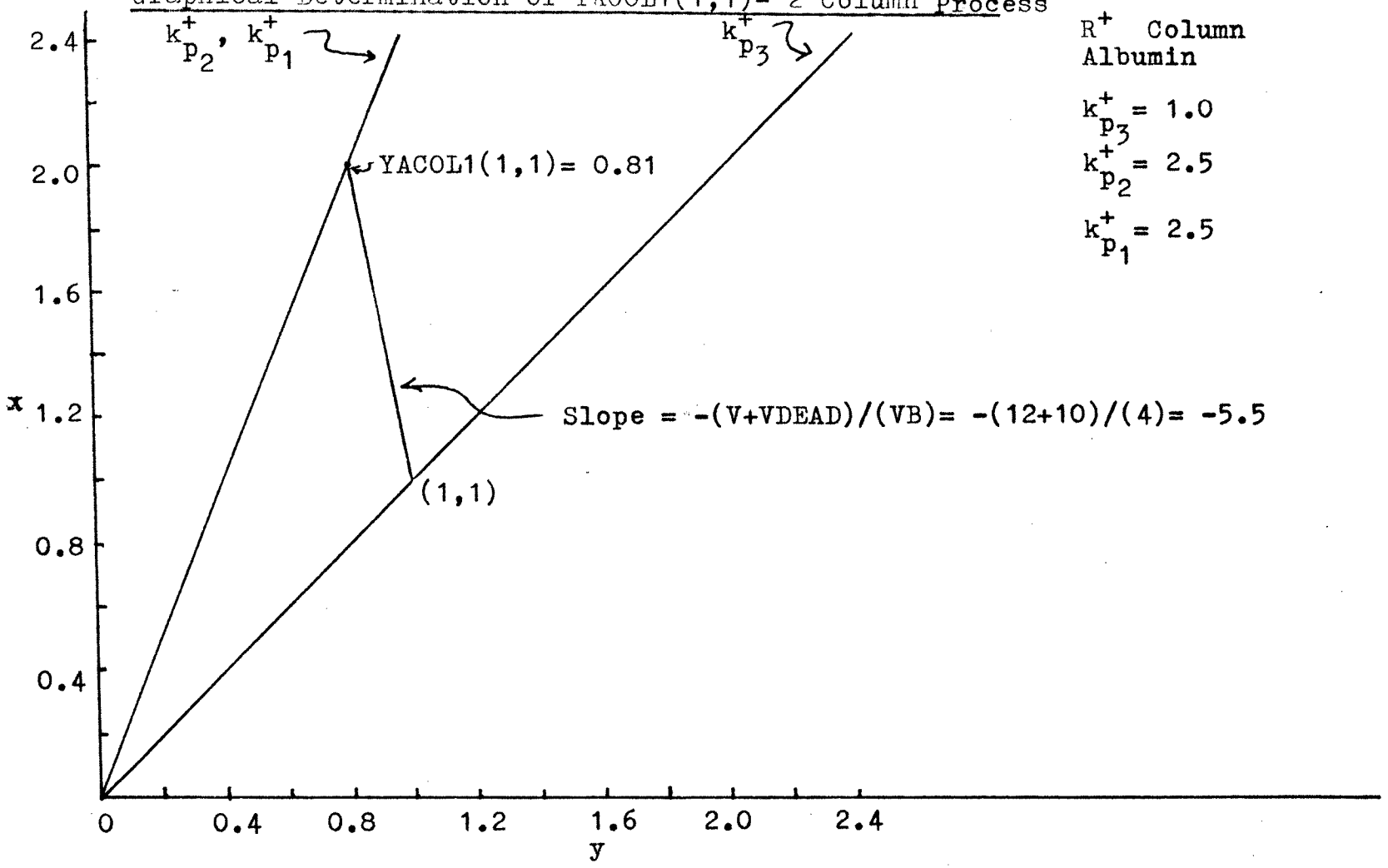

R^+ Column Albumin

$k^+_{p_3}$ = 1.0

$k^+_{p_2}$ = 2.5

$k^+_{p_1}$ = 2.5

Figure XXIX

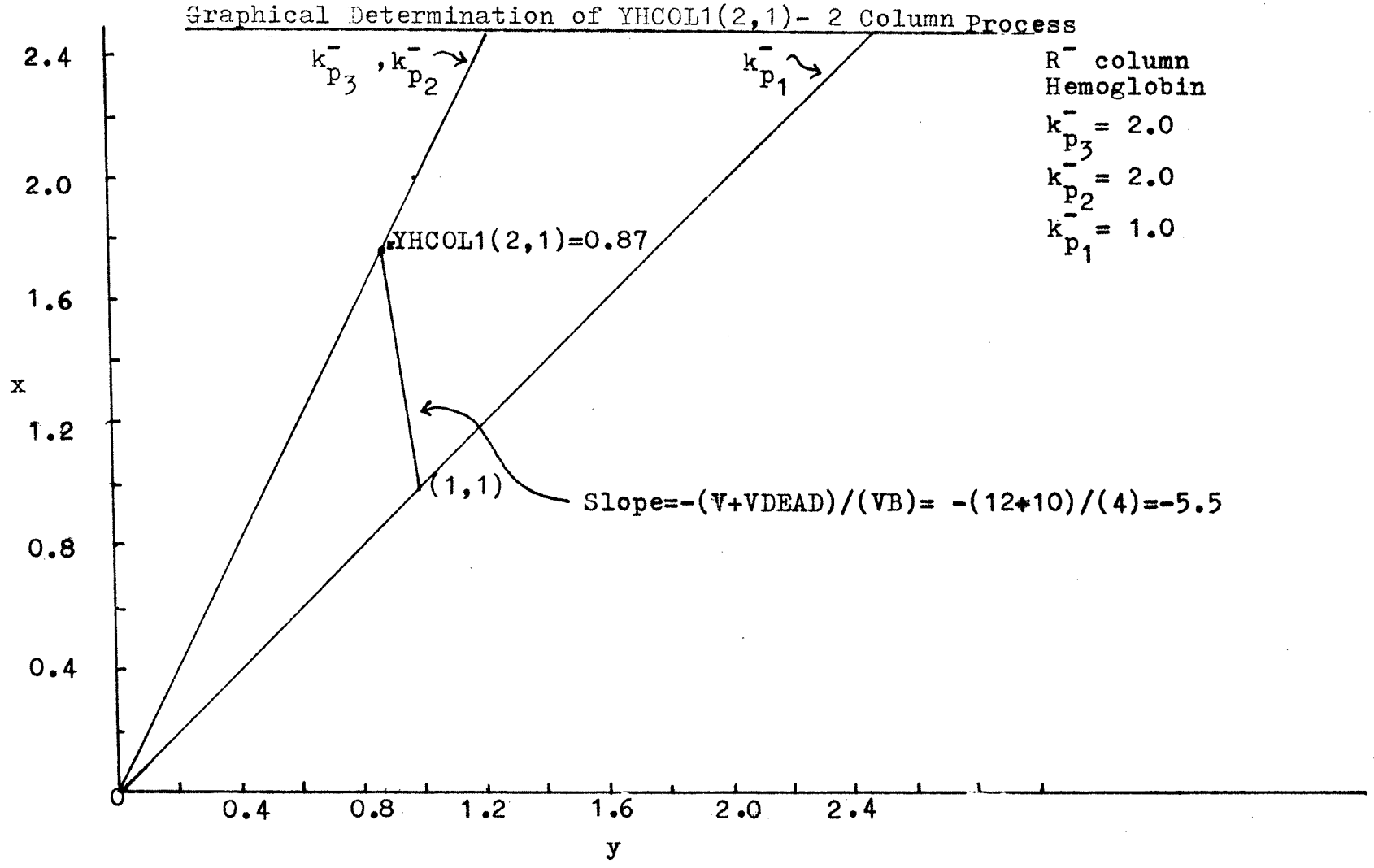
Graphical Determination of YHCOL1(2,1)- 2 Column Process
$k^-_{p_3}$, $k^-_{p_2}$
$k^-_{p_1}$
R⁻ column
Hemoglobin
$k^-_{p_3}$ = 2.0
$k^-_{p_2}$ = 2.0
$k^-_{p_1}$ = 1.0
YHCOL1(2,1)=0.87
(1,1)
Slope=-(V+VDEAD)/(VB)= -(12+10)/(4)=-5.5
2.4
2.0
1.6
1.2
0.8
0.4
x
0
0.4
0.8
1.2
1.6
2.0
2.4
y

Figure XXX

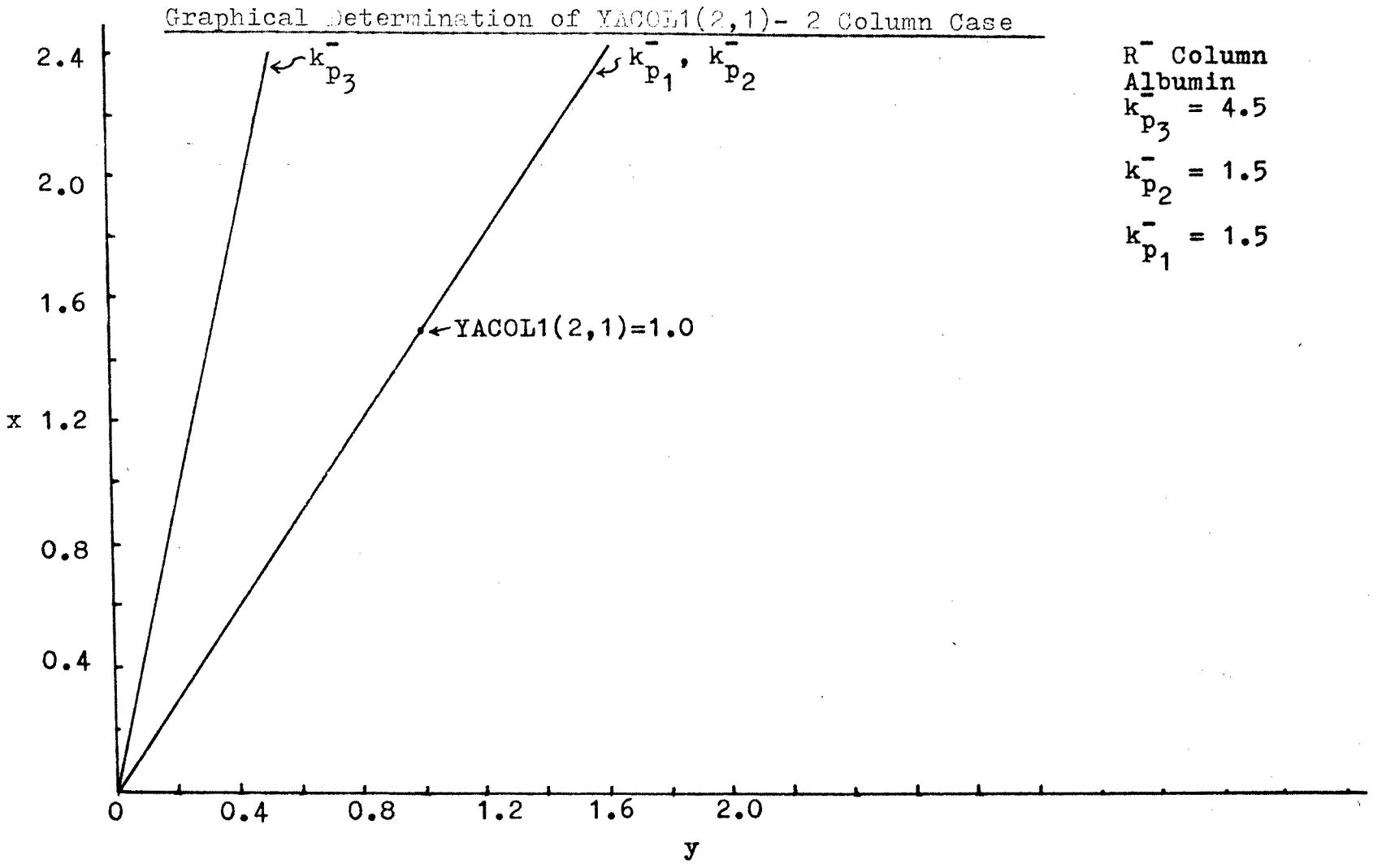
Graphical Determination of YACOL1(2,1)- 2 Column Case
2.4
2.0
1.6
x 1.2
0.8
0.4
0
0.4
0.8
1.2
1.6
2.0
y
$k^-_{p_3}$
$k^-_{p_1}$, $k^-_{p_2}$
YACOL1(2,1)=1.0
R⁻ Column
Albumin
$k^-_{p_3}$ = 4.5
$k^-_{p_2}$ = 1.5
$k^-_{p_1}$ = 1.5

Figure XXxI

APPENDIX 3

FLOW DIAGRAMS AND CORRESPONDING COMPUTER PROGRAMS

FigureXXXII

Volumetric Flow Diagram of the Two Column Process

Flow Diagram of the Two Column Case Showing Volumetric Flow During Each Stage (F1=F2=0.0)

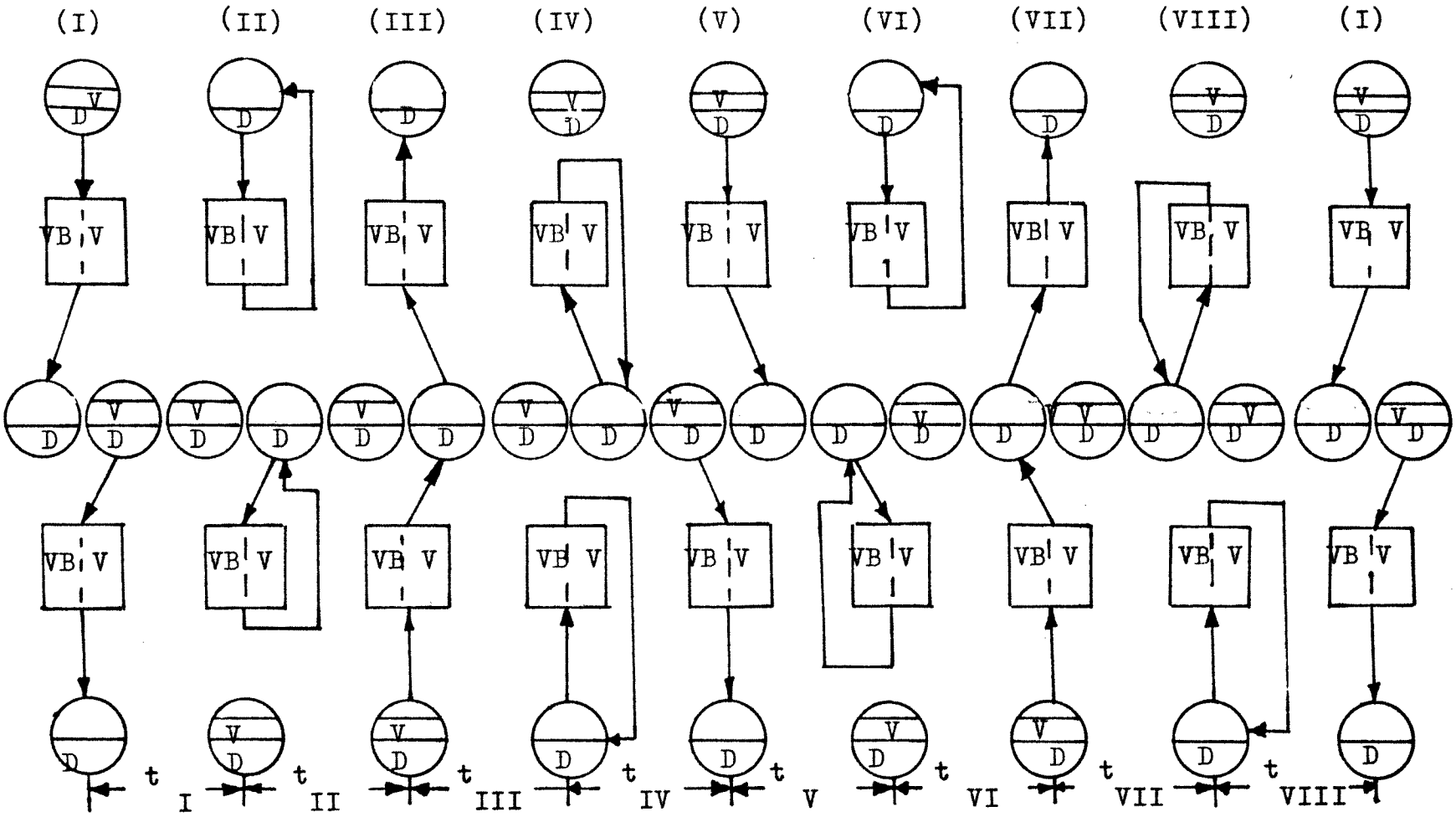

*Volume of Liquid phase- V= 12 cc, D=10cc;Volume of gel or solid phase-VB=4cc

COMPUTER PROGRAM #I.

Two-Column Batch Process

```
      DIMENSION
     1YHRSL1(2,40),YHRSL3(2,40),YHRSL5(2,40),YHRSL7(2,40)
     2YARSL1(2,40),YARSL3(2,40),YARSL5(2,40),YARSL7(2,40)
      DIMENSION
     1YHCOL1(2,40),YHCOL3(2,40),YHCOL5(2,40),YHCOL7(2,40),
     2YACOL1(2,40),YACOL3(2,40),YACOL5(2,40),YACOL7(2,40)
      DIMENSION
     1YHRS1(3,40),YHRS3(3,40),YHRS5(3,40),YHRS7(3,40),
     2YARS1(3,40),YARS3(3,40),YARS5(3,40),YARS7(3,40)
      DIMENSION
     1YHRSR1(2,40),YHRSR3(2,40),YHRSR5(2,40),YHRSR7(2,40),
     2YARSR1(2,40),YARSR3(2,40),YARSR5(2,40),YARSR7(2,40)
      READ(5,10)M,NCYCL
10    FORMAT(7I10)
      READ(5,20)YHAO,YAAO,YHCO,YACO,V,VDEAD,VB,
     1HAKP1,HCKP1,AAKP1,ACKP1,
     2HAKP2,HCKP2,AAKP2,ACKP2,
     3HAKP3,HCKP3,AAKP3,ACKP3
20    FORMAT(7F10.3)
      YHRS1(1,1)=1.0
      YARS1(1,1)=1.0
      YHCOL1(1,1)=0.76
      YACOL1(1,1)=0.81
      YHRSR1(2,1)=1.0
      YARSR1(2,1)=1.0
      YHRSL1(2,1)=0.76
      YARSL1(2,1)=0.81
      YHCOL1(2,1)=0.87
      YACOL1(2,1)=1.0
      YHRS1(3,1)=0.87
      YARS1(3,1)=1.0
      J=1
15    DO 150 I=1,M
      A=(-1)**I
      IF(A)151,151,152
151   YHCOL3(I,J)=((V+VDEAD)*YHRS1(I,J)+VB*
     XHAKP1*YHCOL1(I,J))/(V+VDEAD+VB*HAKP2)
      YACOL3(I,J)=((V+VDEAD)*YARS1(I,J)+VB*
     XAAKP1*YACOL1(I,J))/(V+VDEAD+VB*AAKP2)
      YHRS3(I,J)=YHCOL3(I,J)
      YARS3(I,J)=YACOL3(I,J)
      YHRSL3(I+1,J)=(YHRSL1(I+1,J)*VDEAD+V*YHCOL1(I,J))/
     X(V+VDEAD)
```

```
      YARSL3(I+1,J)=(YARSL1(I+1,J)*VDEAD+V*YACOL1(I,J))/
     X(V+VDEAD)
      GO TO 150
  152 YHCOL3(I,J)=((V+VDEAD)*YHRSR1(I,J)+VB*
     XHCKP2*YHCOL1(I,J))/(V+VDEAD+VB*HCKP3)
      YACOL3(I,J)=((V+VDEAD)*YARSR1(I,J)+VB*
     XACKP2*YACOL1(I,J))/(V+VDEAD+VB*ACKP3)
      YHRSR3(I,J)=YHCOL3(I,J)
      YARSR3(I,J)=YACOL3(I,J)
      YHRS3(I+1,J)=(YHRS1(I+1,J)*VDEAD +V*YHCOL1(I,J))/
     X(V+VDEAD)
      YARS3(I+1,J)=(YARS1(I+1,J)*VDEAD+V*YACOL1(I,J))/
     X(V+VDEAD)
  150 CONTINUE
      DO 250 I=1,M
      A=(-1)**I
      IF(A)251,251,252
  251 YHRS5 (I  ,J)=(VDEAD*YHRS 3(I  ,J)+V*YHCOL3(I  ,J))
     X/(V+VDEAD)
      YARS5(I,J)=(VDEAD*YARS3(I,J)+V*YACOL3(I,J))/(V+
     XVDEAD)
      WRITE(6,33)YHRS5(I,J),YARS5(I,J)
   33 FORMAT(5X, 'YHRS5=',E25.5,'YARS5=',E25.5)
      YHCOL5(I,J)=((V+VDEAD)*YHRSR3(I+1,J)+VB*HAKP2*YHCOL3
     X(I,J))/(V+VDEAD+VB*HAKP3)
      YACOL5(I,J)=((V+VDEAD)*YARSR3(I+1,J)+VB*AAKP2*YACOL3
     X(I,J))/(V+VDEAD+VB*AAKP3)
      YHRSR5(I+1,J)=YHCOL5(I,J)
      YARSR5(I+1,J)=YACOL5(I,J)
      GO TO 250
  252 YHRSL5(I,J)=YHRSL3(I,J)
      YARSL5(I,J)=YARSL3(I,J)
      YHCOL5(I,J)=((V+VDEAD)*YHRS3(I+1,J)+VB*
     XHCKP3*YHCOL3(I,J))/(V+VDEAD+VB*HCKP2)
      YACOL5(I,J)=((V+VDEAD)*YARS3(I+1, J)+VB*
     XACKP3*YACOL3(I,J))/(V+VDEAD+VB*ACKP2)
      YHRS5(I+1,J)=YHCOL5(I,J)
      YARS5(I+1,J)=YACOL5(I,J)
  250 CONTINUE
      DO 350 I=1,M
      A=(-1)**I
      IF(A)351,351,352
  351 YHCOL7(I,J)=((V+VDEAD)*YHRS5(I,J)+VB*HAKP3*
     XYHCOL5(I,J))/(V+VDEAD+VB*HAKP2)
      YACOL7(I,J)=((V+VDEAD)*YARS5(I,J)+VB*AAKP3*
     XYACOL5(I,J))/(V+VDEAD+VB*AAKP2)
      YHRS7(I,J)=YHCOL7(I,J)
      YARS7(I,J)=YACOL7(I,J)
      YHRSR7(I+1,J)=(YHRSR5(I+1,J)*VDEAD+V*YHCOL5(I,J))/
     X(V+VDEAD)
      YARSR7(I+1,J)=(YARSR5(I+1,J)*VDEAD+V*YACOL5(I,J))/
     X(V+VDEAD)
```

```
      GO TO 350
352   YHCOL7(I,J)=((V+VDEAD)*YHRSL5(I,J)+VB*HCKP2*YHCOL5
     X(I,J))/(V+VDEAD+VB*HCKP1)
      YACOL7(I,J)=((V+VDEAD)*YARSL5(I,J)+VB*ACKP2*YACOL5
     X(I,J))/(V+VDEAD+VB*ACKP1)
      YHRSL7(I,J)=YHCOL7(I,J)
      YARSL7(I,J)=YACOL7(I,J)
      YHRS7(I+1,J)=(YHRS5(I+1,J)*VDEAD+V*YHCOL5(I,J))/
     X(V+VDEAD)
      YARS7(I+1,J)=(YARS5(I+1,J)*VDEAD+V*YACOL5(I,J))/
     X(V+VDEAD)
      WRITE(6,34)YHRS7(I+1,J),YARS7(I+1,J)
34    FORMAT(5X,'YHRS7=',E25.5,'YARS7=',E25.5)
350   CONTINUE
      L=J
      J=J+1
      WRITE(6,11)J
11    FORMAT(2X,'***J=',I10)
      DO 450 I=1,M
      A=(-1)**I
      IF(A)451,451,452
451   YHRS1(I,J)=(YHRS7(I,L)*VDEAD+V*YHCOL7(I,L))/(V+
     XVDEAD)
      YARS1(I,J)=(YARS7(I,L)*VDEAD+V*YACOL7(I,L))/(V+
     XVDEAD)
      YHCOL1(I,J)=(VDEAD*YHRSL7(I+1,L)+V*YHCOL7(I+1,L)+VB
     X*HAKP2*YHCOL7(I,L))/(V+VDEAD+VB*HAKP1)
      YACOL1(I,J)=(VDEAD*YARSL7(I+1,L)+V*YACOL7(I+1,L)+VB
     X*AAKP2*YACOL7(I,L))/(V+VDEAD+VB*AAKP1)
      YHRSL1(I+1,J)=YHCOL1(I,J)
      YARSL1(I+1,J)=YACOL1(I,J)
      YHRSR1(I+1,J)=YHRSR7(I+1,L)
      YARSR1(I+1,J)=YARSR7(I+1,L)
      WRITE(6,222)I
      WRITE(6,13)YHRS1(I,J),YARS1(I,J)
      II=I+1
      WRITE(6,222)II
      WRITE(6,16)YHRSL1(I+1,J),YARSL1(I+1,J),YHRSR1(I+1,
     XJ),YARSR1(I,J)
16    FORMAT(5X,'YHRSL1=',E20.5,'YARSL1=',E20.5,'YHRSR1=',
     XE20.5,'YARSR1=',E20.5)
      GO TO 450
452   YHCOL1(I,J)=((V+VDEAD)*YHRS7(I+1,L)+VB*HCKP1
     X*YHCOL7(I,L))/(V+VDEAD+VB*HCKP2)
      YACOL1(I,J)=((V+VDEAD)*YARS7(I+1,L)+VB*ACKP1
     X*YACOL7(I,L))/(V+VDEAD+VB*ACKP2)
      YHRS1(I+1,J)=YHCOL1(I,J)
      YARS1(I+1,J)=YACOL1(I,J)
      WRITE(6,222)I
222   FORMAT(2X,'I=',I10)
```

```
      WRITE(6,12)YHCOL1(I,J),YACOL1(I,J)
12    FORMAT(5X,'YHCOL1=',E25.5,'YACOL1=',E25.5)
      II=I+1
      WRITE(6,222)II
      WRITE(6,13)YHRS1(I+1,J),YARS1(I+1,J)
13    FORMAT(5X,'YHRS1=',E25.5,'YARS1=',E25.5)
450   CONTINUE
      IF(J-NCYCL)15,14,14
14    STOP
      END
```

Figure XXXIII

Flow Diagram of Two-Column Process
CASE 1

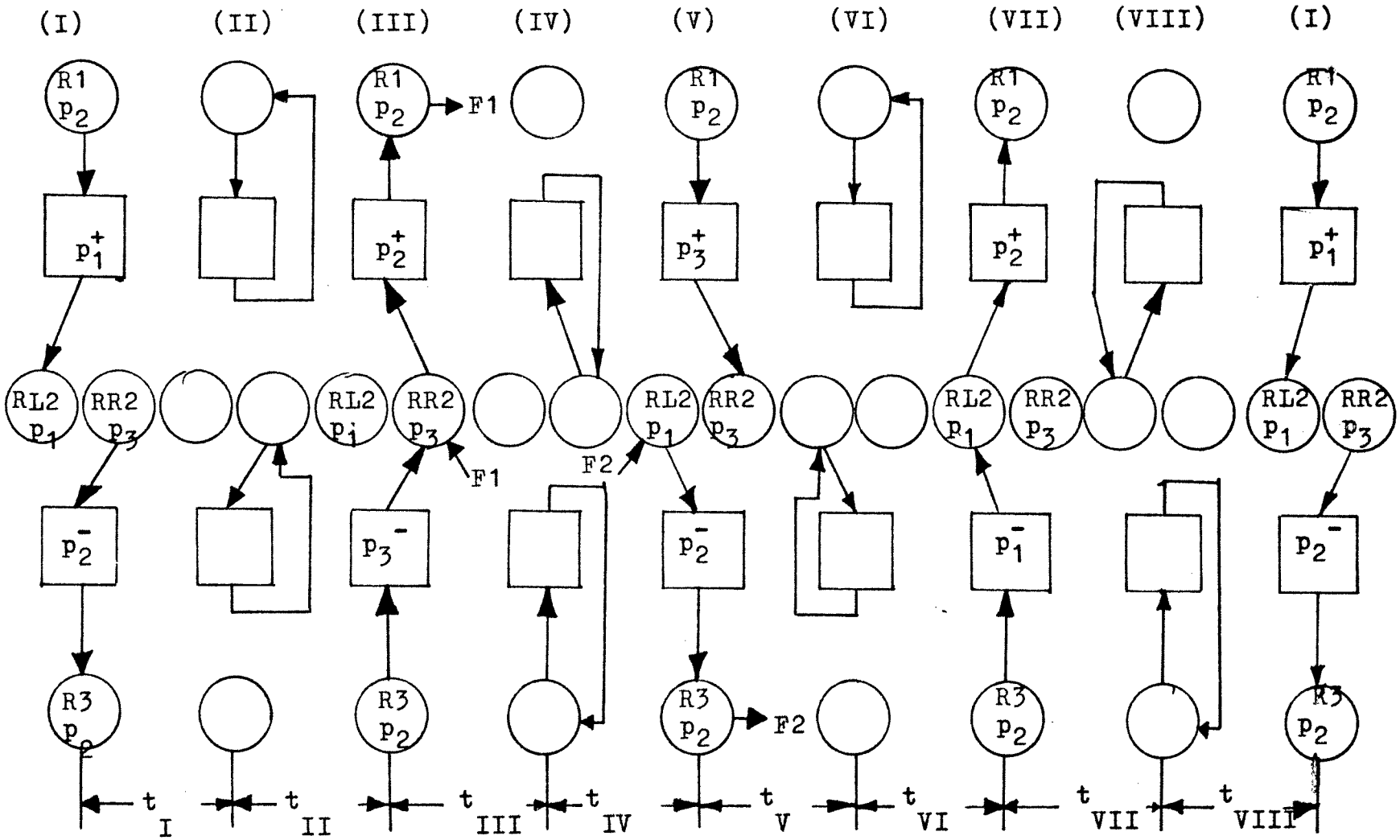

COMPUTER PROGRAM (Case 1) #II. Two-Column Process

```
      DIMENSION
     1YHRS6(1,40),YARS6(1,40),YHRSL8(2,40),YARSL8(2,40)
      DIMENSION
     1YHRSR4(2,40),YARSR4(2,40),YHRSL6(2,40),YARSL6(2,40)
      DIMENSION
     1YHRSL1(2,40),YHRSL3(2,40),YHRSL5(2,40),YHRSL7(2,40),
     2YARSL1(2,40),YARSL3(2,40),YARSL5(2,40),YARSL7(2,40)
      DIMENSION
     1YHCOL1(2,40),YHCOL3(2,40),YHCOL5(2,40),YHCOL7(2,40),
     2YACOL1(2,40),YACOL3(2,40),YACOL5(2,40),YACOL7(2,40)
      DIMENSION
     1YHRS1(3,40),YHRS3(3,40),YHRS5(3,40),YHRS7(3,40),
     2YARS1(3,40),YARS3(3,40),YARS5(3,40),YARS7(3,40)
      DIMENSION
     1YHRSR1(2,40),YHRSR3(2,40),YHRSR5(2,40),YHRSR7(2,40),
     2YARSR1(2,40),YARSR3(2,40),YARSR5(2,40),YARSR7(2,40)
      READ(5,10)M,NCYCL
 10   FORMAT(7I10)
      READ(5,20)YHAO,YAAO,YHCO,YACO,V,VDEAD,VB,
     1HAKP1,HCKP1,AAKP1,ACKP1,
     2HAKP2,HCKP2,AAKP2,ACKP2,
     3HAKP3,HCKP3,AAKP3,ACKP3
 20   FORMAT(7F10.3)
      YHRS1(1,1)=1.0
      YARS1(1,1)=1.0
      YHCOL1(1,1)=0.76
      YACOL1(1,1)=0.81
      YHRSR1(2,1)=1.0
      YARSR1(2,1)=1.0
      YHRSL1(2,1)=0.76
      YARSL1(2,1)=0.81
      YHCOL1(2,1)=0.87
      YACOL1(2,1)=1.0
      YHRS1(3,1)=0.87
      YARS1(3,1)=1.0
      F1=0.0
      F2=0.0
      J=1
 15   DO150 I=1,M
      A=(-1)**I
      IF(A)151,151,152
151   YHCOL3(I,J)=((V+VDEAD)*YHRS1(I,J)+VB*
     XHAKP1*YHCOL1(I,J))/(V+VDEAD+VB*HAKP2)
      YACOL3(I,J)=((V+VDEAD)*YARS1(I,J)+VB*
     XAAKP1*YACOL1(I,J))/(V+VDEAD+VB*AAKP2)
      YHRS3(I,J)=YHCOL3(I,J)
      YARS3(I,J)=YACOL3(I,J)
      YHRSL3(I+1,J)=(YHRSL1(I+1,J)*VDEAD+V*YHCOL1(I,J))/
     X(V+VDEAD)
      YARSL3(I+1,J)=(YARSL1(I+1,J)*VDEAD+V*YACOL1(I,J))/
     X(V+VDEAD)
      GO TO 150
```

```
(CASE 1 continued)
152   YHCOL3(I,J)=((V+VDEAD)*YHRSR1(I,J)+VB*
     XHCKP2*YHCOL1(I,J))/(V+VDEAD+VB*HCKP3)
      YACOL3(I,J)=((V+VDEAD)*YARSR1(I,J)+VB*
     XACKP2*YACOL1(I,J))/(V+VDEAD+VB*ACKP3)
      YHRSR3(I,J)=YHCOL3(I,J)
      YARSR3(I,J)=YACOL3(I,J)
      YHRS3(I+1,J)=(YHRS1(I+1,J)*VDEAD+V*YHCOL1(I,J))/
     X(V+VDEAD)
      YARS3(I+1,J)=(YARS1(I+1,J)*VDEAD+V*YACOL1(I,J))/
     X(V+VDEAD)
150   CONTINUE
      DO 250 I=1,M
      A=(-1)**I
      IF(A)251,251,252
251   YHRSR4(I+1,J)=(F1*1.0+VDEAD*YHRSR3(I+1,J)+V*YHCOL3
     X(I+1,J))/(V+VDEAD+F1)
      YARSR4(I+1,J)=(F1*1.0+VDEAD*YARSR3(I+1,J)+V*YACOL3
     X(I+1,J))/(V+VDEAD+F1)
      YHRS5(I,J)=(YHRS3(I,J)*VDEAD+V*YHCOL3(I,J)+F1*YHRSR4
     X(I+1,J))/(V+VDEAD+F1)
      YARS5(I,J)=(YARS3(I,J)*VDEAD+V*YACOL3(I,J)+F1*YARSR4
     X(I+1,J))/(V+VDEAD+F1)
      WRITE(6,33)YHRS5(I,J),YARS5(I,J)
33    FORMAT(5X,'YHRS5=',E25.5,'YARS5=',E25.5)
      YHCOL5(I,J)=((V+VDEAD)*YHRSR4(I+1,J)+VB*HAKP2*YHCOL3
     X(I,J))/(V+VDEAD+VB*HAKP3)
      YACOL5(I,J)=((V+VDEAD)*YARSR4(I+1,J)+VB*AAKP2*YACOL3
     X(I,J))/(V+VDEAD+VB*AAKP3)
      YHRSR5(I+1,J)=YHCOL5(I,J)
      YARSR5(I+1,J)=YACOL5(I,J)
      GO TO 250
252   YHRSL5(I,J)=YHRSL3(I,J)
      YARSL5(I,J)=YARSL3(I,J)
      YHCOL5(I,J)=((V+VDEAD)*YHRS3(I+1,J)+VB*
     XHCKP3*YHCOL3(I,J))/(V+VDEAD+VB*HCKP2)
      YACOL5(I,J)=((V+VDEAD)*YARS3(I+1,J)+VB*
     XACKP3*YACOL3(I,J))/(V+VDEAD+VB*ACKP2)
      YHRS5(I+1,J)=YHCOL5(I,J)
      YARS5(I+1,J)=YACOL5(I,J)
250   CONTINUE
      DO 350 I=1,M
      A=(-1)**I
      IF(A)351,351,352
351   YHCOL7(I,J)=((V+VDEAD)*YHRS5(I,J)+VB*HAKP3*
     XYHCOL5(I,J))/(V+VDEAD+VB*HAKP2)
      YACOL7(I,J)=((V+VDEAD)*YARS5(I,J)+VB*AAKP3*
     XYACOL5(I,J))/(V+VDEAD+VB*AAKP2)
      YHRS7(I,J)=YHCOL7(I,J)
      YARS7(I,J)=YACOL7(I,J)
      YHRSR7(I+1,J)=(YHRSR5(I+1,J)*VDEAD+V*YHCOL5(I,J))/
     X(V+VDEAD)
      YARSR7(I+1,J)=(YARSR5(I+1,J)*VDEAD+V*YACOL5(I,J))/
```

```
(CASE 1 continued)
     X(V+VDEAD)
      GO TO 350
352   YHRSL6(I,J)=(F2*1.0+(V+VDEAD)*YHRSL5(I,J))/(F2+V+VDEAD)
      YARSL6(I,J)=(F2*1.0+(V+VDEAD)*YARSL5(I,J))/(F2+V+VDEAD)
      YHCOL7(I,J)=((V+VDEAD)*YHRSL6(I,J)+VB*HCKP2*YHCOL5
     X(I,J))/(V+VDEAD+VB*HCKP1)
      YACOL7(I,J)=((V+VDEAD)*YARSL6(I,J)+VB*ACKP2*YACOL5
     X(I,J))/(V+VDEAD+VB*ACKP1)
      YHRSL7(I,J)=YHCOL7(I,J)
      YARSL7(I,J)=YACOL7(I,J)
      YHRS7(I+1,J)=(YHRS5(I+1,J)*VDEAD+V*YHCOL5(I,J)+F2*
     XYHRSL6(I,J))/(V+VDEAD+F2)
      YARS7(I+1,J)=(YARS5(I+1,J)*VDEAD+V*YACOL5(I,J)+F2*
     XYARSL6(I,J))/(V+VDEAD+F2)
      WRITE(6,34)YHRS7(I+1,J),YARS7(I+1,J)
34    FORMAT(5X,'YHRS7=',E25.5,'YARS7=',E25.5)
350   CONTINUE
      L=J
      J=J+1
      WRITE(6,11)J
11    FORMAT(2X,'***J=',I10)
      DO 450 I=1,M
      A=(-1)**I
      IF(A)451,451,452
451   YHRS1(I,J)=(YHRS7(I,L)*VDEAD+V*YHCOL7(I,L))/(V+VDEAD)
      YARS1(I,J)=(YARS7(I,L)*VDEAD+V*YACOL7(I,L))/(V+VDEAD)
      YHCOL1(I,J)=(VDEAD*YHRSL7(I+1,L)+V*YHCOL7(I+1,L)+VB*
     XHAKP2*YHCOL7(I,L))/(V+VDEAD+VB*HAKP1)
      YACOL1(I,J)=(VDEAD*YARSL7(I+1,L)+V*YACOL7(I+1,L)+VB
     X*AAKP2*YACOL7(I,L))/(V+VDEAD+VB*AAKP1)
      YHRSL1(I+1,J)=YHCOL1(I,J)
      YARSL1(I+1,J)=YACOL1(I,J)
      YHRSR1(I+1,J)=YHRSR7(I+1,L)
      YARSR1(I+1,J)=YARSR7(I+1,L)
      WRITE(6,222)I
      WRITE(6,13)YHRS1(I,J),YARS1(I,J)
      II=I+1
      WRITE(6,222)II
      WRITE(6,16)YHRSL1(I+1,J),YARSL1(I+1,J),YHRSR1(I+1,J),
     XYARSR1(I+1,J)
16    FORMAT(5X,'YHRSL1=',E20.5,'YARSL1=',E20.5,'YHRSR1=',
     XE20.5,'YARSR1=',E20.5)
      GO TO 450
452   YHCOL1(I,J)=((V+VDEAD)*YHRS7(I+1,L)+VB*HCKP1
     X*YHCOL7(I,L))/(V+VDEAD+VB*HCKP2)
      YACOL1(I,J)=((V+VDEAD)*YARS7(I+1,L)+VB*ACKP1*
     XYACOL7(I,L))/(V+VDEAD+VB*ACKP2)
      YHRS1(I+1,J)=YHCOL1(I,J)
      YARS1(I+1,J)=YACOL1(I,J)
      WRITE(6,222)I
222   FORMAT(2X,'I=',I10)
```

```
(CASE 1 continued)
      WRITE(6,12) YHCOL1(I,J),YACOL1(I,J)
12    FORMAT(5X,'YHCOL1=',E25.5,'YACOL1=',E25.5)
      II=I+1
      WRITE(6,222)II
      WRITE(6,13)YHRS1(I+1,J),YARS1(I+1,J)
13    FORMAT(5X,'YHRS1=',E25.5,'YARS1=',E25.5)
450   CONTINUE
      IF(J-NCYCL)15,14,14
14    F1=F1+3.0
      F2=F2+3.0
      J=1.0
      IF(F1.EQ.15)GO TO 91
      GO TO 15
91    STOP
      END
```

Figure XXXIV

Flow Diagram of the Two-Column Process
CASE 2

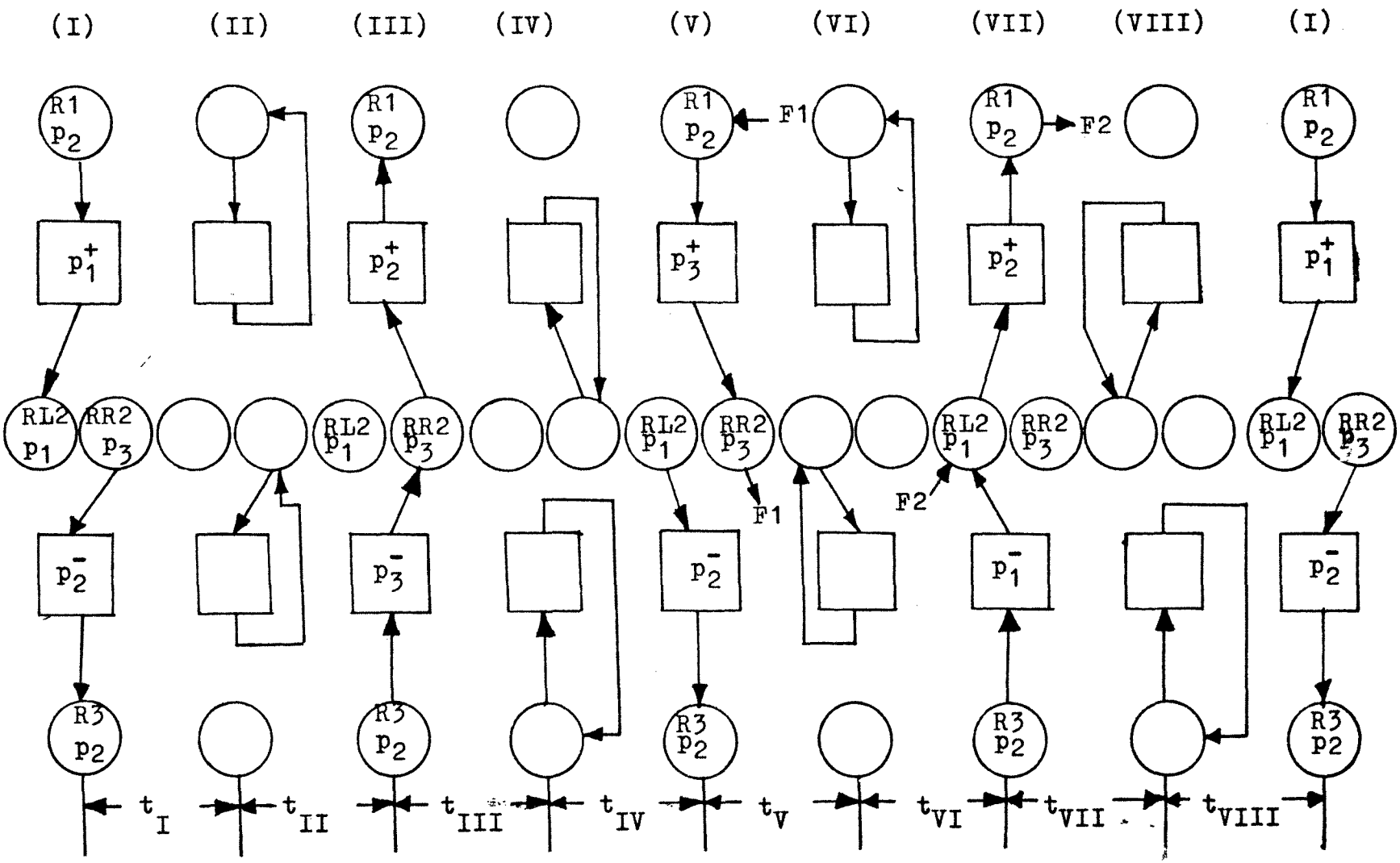

COMPUTER PROGRAM (Case 2) #III. Two-Column Process

```
      DIMENSION
     1YHRSR4(2,40),YARSR4(2,40),YHRSL6(2,40),YARSL6(2,40)
      DIMENSION
     1YHRS6(1,40),YARS6(1,40),YHRSL8(2,40),YARSL8(2,40)
      DIMENSION
     1YHRSR1(2,40),YHRSR3(2,40),YHRSR5(2,40),YHRSR7(2,40),
     2YARSR1(2,40),YARSR3(2,40),YARSR5(2,40),YARSR7(2,40)
      DIMENSION
     1YHRSL1(2,40),YHRSL3(2,40),YHRSL5(2,40),YHRSL7(2,40),
     2YARSL1(2,40),YARSL3(2,40),YARSL5(2,40),YARSL7(2,40)
      DIMENSION
     1YHCOL1(2,40),YHCOL3(2,40),YHCOL5(2,40),YHCOL7(2,40),
     2YACOL1(2,40),YACOL3(2,40),YACOL5(2,40),YACOL7(2,40)
      DIMENSION
     1YHRS1(3,40),YHRS3(3,40),YHRS5(3,40),YHRS7(3,40),
     2YARS1(3,40),YARS3(3,40),YARS5(3,40),YARS7(3,40)
      READ(5,10)M,NCYCL
10    FORMAT(7I10)
      READ(5,20)YHAO,YAAO,YHCO,V,VDEAD,VB,
     1HAKP1,HCKP1,AAKP1,ACKP1,
     2HAKP2,HCKP2,AAKP2,ACKP2,
     3HAKP3,HCKP3,AAKP3,ACKP3
20    FORMAT(7F10.3)
      YHRS1(1,1)=1.0
      YARS1(1,1)=1.0
      YHCOL1(1,1)=0.76
      YACOL1(1,1)=0.81
      YHRSR1(2,1)=1.0
      YARSR1(2,1)=1.0
      YHRSL1(2,1)=0.76
      YARSL1(2,1)=0.81
      YHCOL1(2,1)=0.87
      YACOL1(2,1)=1.0
      YHRS1(3,1)=0.87
      YARS1(3,1)=1.0
      F1=0.0
      F2=0.0
      J=1
15    DO 150 I=1,M
      A=(-1)**I
      IF(A)151,151,152
151   YHCOL3(I,J)=((V+VDEAD)*YHRS1(I,J)+VB*
     XHAKP1*YHCOL1(I,J))/(V+VDEAD+VB*HAKP2)
      YACOL3(I,J)=((V+VDEAD)*YARS1(I,J)+VB*
     XAAKP1*YACOL1(I,J))/(V+VDEAD+VB*AAKP2)
      YHRS3(I,J)=YHCOL3(I,J)
      YARS3(I,J)=YACOL3(I,J)
      YHRSL3(I+1,J)=(YHRSL1(I+1,J)*VDEAD+V*YHCOL1(I,J))/
     X(V+VDEAD)
      YARSL3(I+1,J)=(YARSL1(I+1,J)*VDEAD+V*YACOL1(I,J))/
     X(V+VDEAD)
      GO TO 150
152   YHCOL3(I,J)=((V+VDEAD)*YHRSR1(I,J)+VB*
```

```
(CASE 2 Continued)
     XHCKP2*YHCOL1(I,J))/(V+VDEAD+VB*HCKP3)
      YACOL3(I,J)=((V+VDEAD)*YARSR1(I,J)+VB*
     XACKP2*YACOL1(I,J))/(V+VDEAD+VB*ACKP3)
      YHRSR3(I,J)=YHCOL3(I,J)
      YARSR3(I,J)=YACOL3(I,J)
      YHRS3(I+1,J)=(YHRS1(I+1,J)*VDEAD+V*YHCOL1(I,J))/
     X(V+VDEAD)
      YARS3(I+1,J)=(YARS1(I+1,J)*VDEAD+V*YACOL1(I,J))/
     X(V+VDEAD)
150  CONTINUE
      DO 250 I=1,M
      A=(-1)**I
      IF(A)251,251,252
251   YHRS5(I,J)=(YHRS3(I,J)*VDEAD+V*YHCOL3(I,J))/(V+VDEAD)
      YARS5(I,J)=(YARS3(I,J)*VDEAD+V*YACOL3(I,J))/(V+VDEAD)
      WRITE(6,33)YHRS5(I,J),YARS5(I,J)
33    FORMAT(5X,'YHRS5=',E25.5,'YARS5=',E25.5)
      YHCOL5(I,J)=((V+VDEAD)*YHRSR3(I+1,J)+VB*HAKP2*
     XYHCOL3(I,J))/(V+VDEAD+VB*HAKP3)
      YACOL5(I,J)=((V+VDEAD)*YARSR3(I+1,J)+VB*AAKP2*YACOL3
     X(I,J))/(V+VDEAD+VB*AAKP3)
      YHRSR5(I+1,J)=YHCOL5(I,J)
      YARSR5(I+1,J)=YACOL5(I,J)
      GO TO 250
252   YHRSL5(I,J)=YHRSL3(I,J)
      YARSL5(I,J)=YARSL3(I,J)
      YHCOL5(I,J)=((V+VDEAD)*YHRS3(I+1,J)+VB*
     XHCKP3*YHCOL3(I,J))/(V+VDEAD+VB*HCKP2)
      YACOL5(I,J)=((V+VDEAD)*YARS3(I+1,J)+VB*
     XACKP3*YACOL3(I,J))/(V+VDEAD+VB*ACKP2)
      YHRS5(I+1,J)=YHCOL5(I,J)
      YARS5(I+1,J)=YACOL5(I,J)
250   CONTINUE
      DO 350 I=1,M
      A=(-1)**I
      IF(A)351,351,352
351   YHRS6(I,J)=((V+VDEAD)*YHRS5(I,J)+F1*1.0)/(V+F1+VDEAD)
      YARS6(I,J)=((V+VDEAD)*YARS5(I,J)+F1*1.0)/(V+F1+VDEAD)
      YHCOL7(I,J)=((V+VDEAD)*YHRS6(I,J)+VB*HAKP3*
     XYHCOL5(I,J))/(V+VDEAD+VB*HAKP2)
      YACOL7(I,J)=((V+VDEAD)*YARS6(I,J)+VB*AAKP3*
     XYACOL5(I,J))/(V+VDEAD+VB*AAKP2)
      YHRS7(I,J)=YHCOL7(I,J)
      YARS7(I,J)=YACOL7(I,J)
      YHRSR7(I+1,J)=(YHRSR5(I+1,J)*VDEAD+V*YHCOL5(I,J)+F1*
     XYHRS6(I,J))/(V+VDEAD+F1)
      YARSR7(I+1,J)=(YARSR5(I+1,J)*VDEAD+V*YACOL5(I,J)+F1*
     XYARS6(I,J))/(V+VDEAD+F1)
      GO TO 350
352   YHCOL7(I,J)=((V+VDEAD)*YHRSL5(I,J)+VB*HCKP2*YHCOL5
```

```
(CASE 2 continued)
     X(I,J))/(V+VDEAD+VB*HCKP1)
      YACOL7(I,J)=((V+VDEAD)*YARSL5(I,J)+VB*ACKP2*YACOL5
     X(I,J))/(V+VDEAD+VB*ACKP1)
      YHRSL7(I,J)=YHCOL7(I,J)
      YARSL7(I,J)=YACOL7(I,J)
      YHRS7(I+1,J)=(YHRS5(I+1,J)*VDEAD+V*YHCOL5(I,J))/
     X(V+VDEAD)
      YARS7(I+1,J)=(YARS5(I+1,J)*VDEAD+V*YACOL5(I,J))/
     X(V+VDEAD)
      WRITE(6,34)YHRS7(I+1,J),YARS7(I+1,J)
34    FORMAT(5X,'YHRS7=',E25.5,'YARS7=',E25.5)
350   CONTINUE
      L=J
      J=J+1
      WRITE(6,11)J
11    FORMAT(2X,'***J=',I10)
      DO 450 I=1,M
      A=(-1)**I
      IF(A)451,451,452
451   YHRSL8(I+1,L)=(F2*1.0+VDEAD*YHRSL7(I+1,L)+
     XV*YHCOL7(I+1,L))/(F2+VDEAD+V)
      YARSL8(I+1,L)=(F2*1.0+VDEAD*YARSL7(I+1,L)+
     XV*YACOL7(I+1,L))/(F2+VDEAD+V)
      YHRS1(I,J)=(YHRS7(I,L)*VDEAD+V*YHCOL7(I,L)+F2*YHRSL8
     X(I+1,L))/(V+VDEAD+F2)
      YARS1(I,J)=(YARS7(I,L)*VDEAD+V*YACOL7(I,L)+F2*YARSL8
     X(I+1,L))/(V+VDEAD+F2)
      YHCOL1(I,J)=((VDEAD+V)*YHRSL8(I+1,L)+VB*HAKP2*YHCOL7
     X(I,L))/(V+VDEAD+VB*HAKP1)
      YACOL1(I,J)=(VDEAD*YARSL8(I+1,L)+V*YARSL8(I+1,L)+VB
     X*AAKP2*YACOL7(I,L))/(V+VDEAD+VB*AAKP1)
      YHRSL1(I+1,J)=YHCOL1(I,J)
      YARSL1(I+1,J)=YACOL1(I,J)
      YHRSR1(I+1,J)=YHRSR7(I+1,L)
      YARSR1(I+1,J)=YARSR7(I+1,L)
      WRITE(6,222)I
      WRITE(6,13)YHRS1(I,J),YARS1(I,J)
      II=I+1
      WRITE(6,222)II
      WRITE(6,16)YHRSL1(I+1,J),YARSL1(I+1,J),YHRSR1(I+1,J),
     XYARSR1(I+1,J)
16    FORMAT(5X,'YHRSL1=',E20.5,'YARSL1=',E20.5,'YHRSR1=',
     XE20.5,'YARSR1=',E20.5)
      GO TO 450
452   YHCOL1(I,J)=((V+VDEAD)*YHRS7(I+1,L)+VB*HCKP1
     X*YHCOL7(I,L))/(V+VDEAD+VB*HCKP2)
      YACOL1(I,J)=((V+VDEAD)*YARS7(I+1,L)+VB*ACKP1
     X*YACOL7(I,L))/(V+VDEAD+VB*ACKP2)
      YHRS1(I+1,J)=YHCOL1(I,J)
      YARS1(I+1,J)=YACOL1(I,J)
```

```
(CASE 2 continued)
    WRITE(6,222)I
222 FORMAT(2X,'I=',I10)
    WRITE(6,12)YHCOL1(I,J),YACOL1(I,J)
12  FORMAT(5X,'YHCOL1=',E25.5,'YACOL1=',E25.5)
    II=I+1
    WRITE(6,222)II
    WRITE(6,13)YHRS1(I+1,J),YARS1(I+1,J)
13  FORMAT(5X,'YHRS1=',E25.5,'YARS1=',E25.5)
450 CONTINUE
    IF(J-NCYCL)15,14,14
14  F1=F1+3.0
    F2=F2+3.0
    J=1
    IF(F1.EQ.15)GO TO 91
    GO TO 15
91  STOP
    END
```

Figure XXXV

Flow Diagram of Two-Column Process

CASE 3

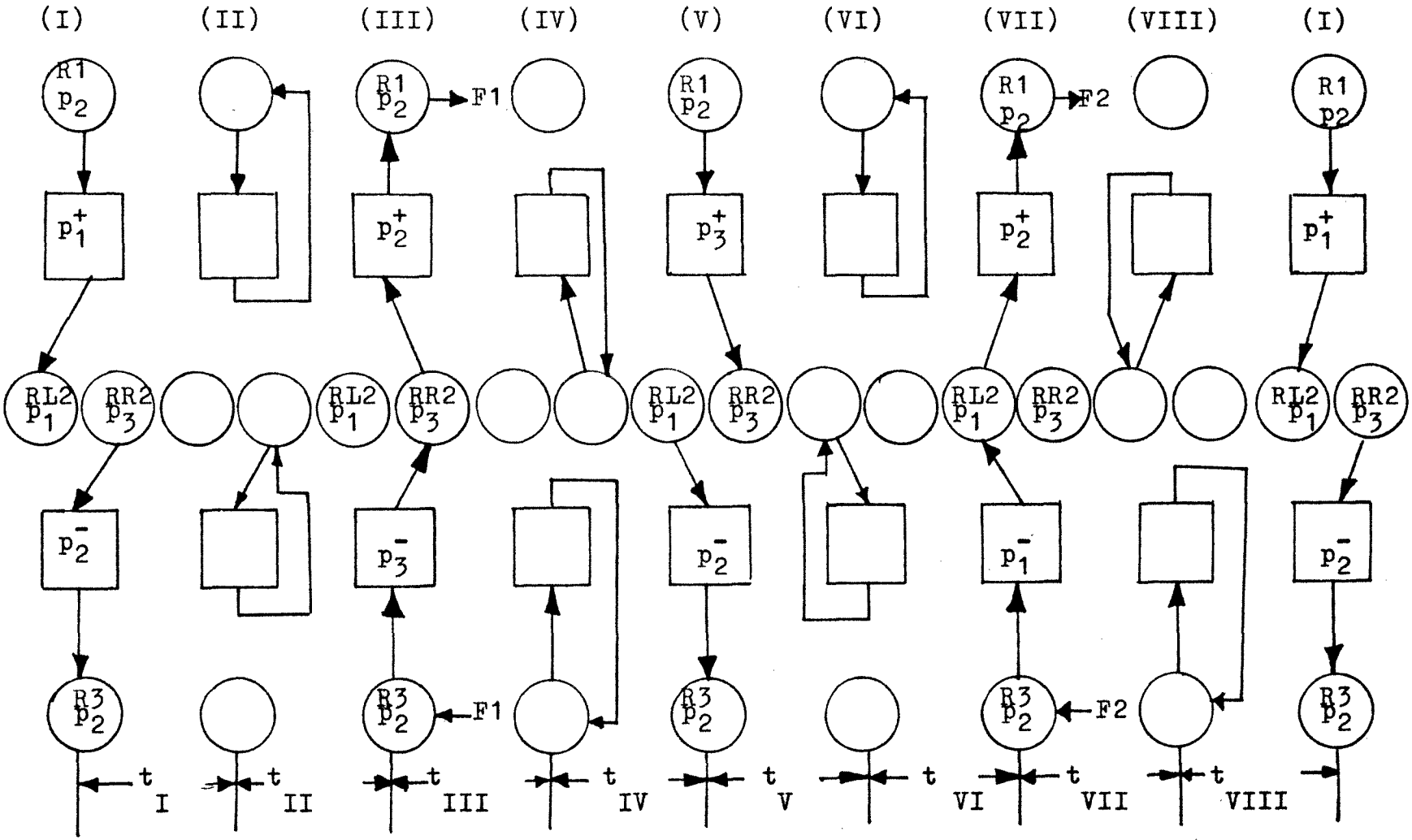

COMPUTER PROGRAM (Case 3) #IV.

Two-Column Process

```
      DIMENSION
     1YHRS4(3,40),YARS4(3,40),YHRSL8(2,40),YARSL8(2,40),
     2YHRS8(3,40),YARS8(3,40),YHRSR4(2,40),YARSR4(2,40)
      DIMENSION
     1YHRSR1(2,40),YHRSR3(2,40),YHRSR5(2,40),YHRSR7(2,40),
     2YARSR1(2,40),YARSR3(2,40),YARSR5(2,40),YARSR7(2,40)
      DIMENSION
     1YHRSL1(2,40),YHRSL3(2,40),YHRSL5(2,40),YHRSL7(2,40),
     2YARSL1(2,40),YARSL3(2,40),YARSL5(2,40),YARSL7(2,40)
      DIMENSION
     1YHCOL1(2,40),YHCOL3(2,40),YHCOL5(2,40),YHCOL7(2,40),
     2YACOL1(2,40),YACOL3(2,40),YACOL5(2,40),YACOL7(2,40)
      DIMENSION
     1YHRS1(3,40),YHRS3(3,40),YHRS5(3,40),YHRS7(3,40),
     2YARS1(3,40),YARS3(3,40),YARS5(3,40),YARS7(3,40)
      READ(5,10)M,NCYCL
10    FORMAT(7I10)
      READ(5,20)YHAO,YAAO,YHCO,YACO,V,VDEAD,VB,
     1HAKP1,HCKP1,AAKP1,ACKP1,
     2HAKP2,HCKP2,AAKP2,ACKP2,
     3HAKP3,HCKP3,AAKP3,ACKP3
20    FORMAT(7F10.3)
      YHRS1(1,1)=1.0
      YARS1(1,1)=1.0
      YHCOL1(1,1)=0.76
      YACOL1(1,1)=0.81
      YHRSR1(2,1)=1.0
      YARSR1(2,1)=1.0
      YHRSL1(2,1)=0.76
      YARSL1(2,1)=0.81
      YHCOL1(2,1)=0.87
      YACOL1(2,1)=1.0
      YHRS1(3,1)=0.87
      YARS1(3,1)=1.0
      F1=0.0
      F2=0.0
      J=1
15    DO150 I=1,M
      A=(-1)**I
      IF(A)151,151,152
151   YHCOL3(I,J)=((V+VDEAD)*YHRS1(I,J)+VB*
     XHAKP1*YHCOL1(I,J))/(V+VDEAD+VB*HAKP2)
      YACOL3(I,J)=((V+VDEAD)*YARS1(I,J)+VB*
     XAAKP1*YACOL1(I,J))/(V+VDEAD+VB*AAKP2)
      YHRS3(I,J)=YHCOL3(I,J)
      YARS3(I,J)=YACOL3(I,J)
      YHRSL3(I+1,J)=(YHRSL1(I+1,J)*VDEAD+V*YHCOL1(I,J))/
     X(V+VDEAD)
      YARSL3(I+1,J)=(YARSL1(I+1,J)*VDEAD+V*YACOL1(I,J))/
     X(V+VDEAD)
```

```
(Case 3 continued)
     GO TO 150
152  YHCOL3(I,J)=((V+VDEAD)*YHRSR1(I,J)+VB*
    XHCKP2*YHCOL1(I,J))/(V+VDEAD+VB*HCKP3)
     YACOL3(I,J)=((V+VDEAD)*YARSR1(I,J)+VB*
    XACKP2*YACOL1(I,J))/(V+VDEAD+VB*ACKP3)
     YHRSR3(I,J)=YHCOL3(I,J)
     YARSR3(I,J)=YACOL3(I,J)
     YHRS3(I+1,J)=(YHRS1(I+1,J)*VDEAD+V*YHCOL1(I,J))/
    X(V+VDEAD)
     YARS3(I+1,J)=(YARS1(I+1,J)*VDEAD+V*YACOL1(I,J))/
    X(V+VDEAD)
150  CONTINUE
     DO 250 I=1,M
     A=(-1)**I
     IF(A)251,251,252
251  YHRS4(I+2,J)=((V+VDEAD)*YHRS3(I+2,J)+F1*1.0)/(V+
    XVDEAD+F1)
     YARS4(I+2,J)=((V+VDEAD)*YARS3(I+2,J)+F1*1.0)/(V+
    XVDEAD+F1)
     YHRSR4(I+1,J)=(F1*YHRS4(I+2,J)+VDEAD*YHRSR3(I+1,J)
    X+V*YHCOL3(I+1,J))/(V+VDEAD+F1)
     YARSR4(I+1,J)=(F1*YARS4(I+2,J)+VDEAD*YARSR3(I+1,J)
    X+V*YACOL3(I+1,J))/(V+VDEAD+F1)
     YHRS5(I,J)=(YHRS3(I,J)*VDEAD+V*YHCOL3(I,J)+F1*
    XYHRSR4(I+1,J))/(V+VDEAD+F1)
     YARS5(I,J)=(YARS3(I,J)*VDEAD+V*YACOL3(I,J)+F1*
    XYARSR4(I+1,J))/(V+VDEAD+F1)
     WRITE(6,33)YHRS5(I,J),YARS5(I,J)
33   FORMAT(5X,'YHRS5=',E25.5,'YARS5=',E25.5)
     YHCOL5(I,J)=((V+VDEAD)*YHRSR4(I+1,J)+VB*HAKP2*YHCOL3
    X(I,J))/(V+VDEAD+VB*HAKP3)
     YACOL5(I,J)=((V+VDEAD)*YARSR4(I+1,J)+VB*AAKP2*YACOL3
    X(I,J))/(V+VDEAD+VB*AAKP3)
     YHRSR5(I+1,J)=YHCOL5(I,J)
     YARSR5(I+1,J)=YACOL5(I,J)
     GO TO 250
252  YHRSL5(I,J)=YHRSL3(I,J)
     YARSL5(I,J)=YARSL3(I,J)
     YHCOL5(I,J)=((V+VDEAD)*YHRS4(I+1,J)+VB*
    XHCKP3*YHCOL3(I,J))/(V+VDEAD+VB*HCKP2)
     YACOL5(I,J)=((V+VDEAD)*YARS4(I+1,J)+VB*
    XACKP3*YACOL3(I,J))/(V+VDEAD+VB*ACKP2)
     YHRS5(I+1,J)=YHCOL5(I,J)
     YARS5(I+1,J)=YACOL5(I,J)
250  CONTINUE
     DO 350 I=1,M
     A=(-1)**I
     IF(A)351,351,352
351  YHCOL7(I,J)=((V+VDEAD)*YHRS5(I,J)+VB*HAKP3*
    XYHCOL5(I,J))/(V+VDEAD+VB*HAKP2)
     YACOL7(I,J)=((V+VDEAD)*YARS5(I,J)+VB*AAKP3*
    XYACOL5(I,J))/(V+VDEAD+VB*AAKP2)
     YHRS7(I,J)=YHCOL7(I,J)
```

```
(CASE 3 continued)
      YARS7(I,J)=YACOL7(I,J)
       YHRSR7(I+1,J)=(YHRSR5(I+1,J)*VDEAD+V*YHCOL5(I,J))/
     X(V+VDEAD)
       YARSR7(I+1,J)=(YARSR5(I+1,J)*VDEAD+V*YACOL5(I,J))/
     X(V+VDEAD)
       GO TO 350
  352 YHCOL7(I,J)=((V+VDEAD)*YHRSL5(I,J)+VB*HCKP2*YHCOL5
     X(I,J))/(V+VDEAD+VB*HCKP1)
       YACOL7(I,J)=((V+VDEAD)*YARSL5(I,J)+VB*ACKP2*YACOL5
     X(I,J))/(V+VDEAD+VB*ACKP1)
       YHRSL7(I,J)=YHCOL7(I,J)
       YARSL7(I,J)=YACOL7(I,J)
       YHRS7(I+1,J)=(YHRS5(I+1,J)*VDEAD+V*YHCOL5(I,J))/(V+
     XVDEAD)
       YARS7(I+1,J)=(YARS5(I+1,J)*VDEAD+V*YACOL5(I,J))/(V+
     XVDEAD)
       WRITE(6,34)YHRS7(I+1,J),YARS7(I+1,J)
   34  FORMAT(5X,'YHRS7=',E25.5,'YARS7=',E25.5)
  350 CONTINUE
       L=J
       J=J+1
       WRITE(6,11)J
   11  FORMAT(2X,'***J=',I10)
       DO 450 I=1,M
       A=(-1)**I
       IF(A)451,451,452
  451 YHRS8(I+2,L)=((V+VDEAD)*YHRS7(I+2,L)+F2*1.0)/
     X(F2+V+VDEAD)
       YARS8(I+2,L)=((V+VDEAD)*YARS7(I+2,L)+F2*1.0)/
     X(F2+V+VDEAD)
       YHRSL8(I+1,L)=(VDEAD*YHRSL7(I+1,L)+V*YHCOL7(I+1,L)
     X+F2*YHRS8(I+2,L))/(V+F2+VDEAD)
       YARSL8(I+1,L)=(VDEAD*YARSL7(I+1,L)+V*YACOL7(I+1,L)
     X+F2*YARS8(I+2,L))/(V+F2+VDEAD)
       YHRS1(I,J)=(YHRS7(I,L)*VDEAD+V*YHCOL7(I,L)+F2*YHRSL8
     X(I+1,L))/(V+VDEAD+F2)
       YARS1(I,J)=(YARS7(I,L)*VDEAD+V*YACOL7(I,L)+F2*YARSL8
     X(I+1,L))/(V+VDEAD+F2)
       YHCOL1(I,J)=((V+VDEAD)*YHRSL8(I+1,L)+VB*HAKP2*YHCOL7
     X(I,L))/(V+VDEAD+VB*HAKP1)
       YACOL1(I,J)=(VDEAD*YARSL8(I+1,L)+V*YARSL8(I+1,L)+VB
     X*AAKP2*YACOL7(I,L))/(V+VDEAD+VB*AAKP1)
       YHRSL1(I+1,J)=YHCOL1(I,J)
       YARSL1(I+1,J)=YACOL1(I,J)
       YHRSR1(I+1,J)=YHRSR7(I+1,L)
       YARSR1(I+1,J)=YARSR7(I+1,L)
       WRITE(6,222)I
       WRITE(6,13)YHRS1(I,J),YARS1(I,J)
       II=I+1
       WRITE(6,222)II
       WRITE(6,16)YHRSL1(I+1,J),YARSL1(I+1,J),YHRSR1(I+1,J),
     XYARSR1(I+1,J)
```

```
(CASE 3 continued)
16  FORMAT(5X,'YHRSL1=',E20.5,'YARSL1=',E20.5,'YHRSR1=',
   XE20.5,'YARSR1=',E20.5)
    GO TO 450
452 YHCOL1(I,J)=((V+VDEAD)*YHRS8(I+1,L)+VB*HCKP1
   X*YHCOL7(I,L))/(V+VDEAD+VB*HCKP2)
    YACOL1(I,J)=((V+VDEAD)*YARS8(I+1,L)+VB*ACKP1*
   XYACOL7(I,L))/(V+VDEAD+VB*ACKP2)
    YHRS1(I+1,J)=YHCOL1(I,J)
    YARS1(I+1,J)=YACOL1(I,J)
    WRITE(6,222)I
222 FORMAT(2X,'I=',I10)
    WRITE(6,12) YHCOL1(I,J),YACOL1(I,J)
12  FORMAT(5X,'YHCOL1=',E25,5,'YACOL1=',E25.5)
    II=I+1
    WRITE(6,222)II
    WRITE(6,13)YHRS1(I+1,J),YARS1(I+1,J)
13  FORMAT(5X,'YHRS1=',E25.5,'YARS1=',E25.5)
450 CONTINUE
    IF(J-NCYCL)15,14,14
14  F1=F1+3.0
    F2=F2+3.0
    J=1
    If(F1.EQ.15)GO TO 91
    GO TO 15
91  STOP
    END
```

Figure XXXVI

Flow Diagram of the Two-Column Process

CASE 4

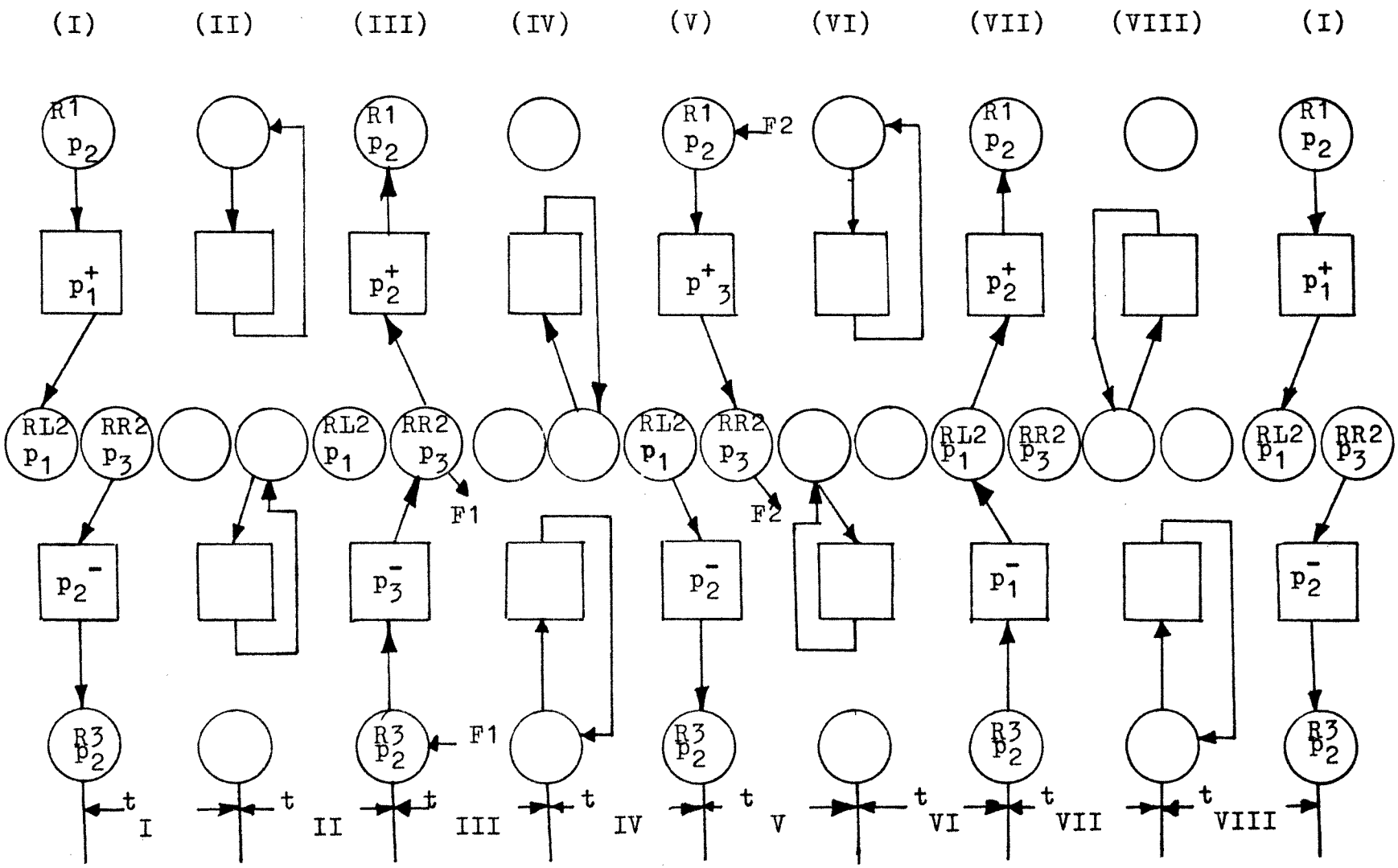

COMPUTER PROGRAM (Case 4) # V.

Two-Column Process

```
      DIMENSION
     1YHRSR4(2,40),YARSR4(2,40),YHRS6(1,40),YARS6(1,40),
     2YHRS4(3,40), YARS4(3,40)
      DIMENSION
     1YHRSL1(2,40),YHRSL3(2,40),YHRSL5(2,40),YHRSL7(2,40),
     2YARSL1(2,40),YARSL3(2,40),YARSL5(2,40),YARSL7(2,40)
      DIMENSION
     1YHCOL1(2,40),YHCOL3(2,40),YHCOL5(2,40),YHCOL7(2,40),
     2YACOL1(2,40),YACOL3(2,40),YACOL5(2,40),YACOL7(2,40)
      DIMENSION
     1YHRS1(3,40),YHRS3(3,40),YHRS5(3,40),YHRS7(3,40),
     2YARS1(3,40),YARS3(3,40),YARS5(3,40),YARS7(3,40)
      DIMENSION
     1YHRSR1(2,40),YHRSR3(2,40),YHRSR5(2,40),YHRSR7(2,40),
     2YARSR1(2,40),YARSR3(2,40),YARSR5(2,40),YARSR7(2,40)
      READ(5,10)M,NCYCL
10    FORMAT(7I10)
      READ(5,20)YHAO,YAAO,YHCO,YACO,V,VDEAD,VB,
     1HAKP1,HCKP1,AAKP1,ACKP1,
     2HAKP2,HCKP2,AAKP2,ACKP2,
     3HAKP3,HCKP3,AAKP3,ACKP3
20    FORMAT(7F10.3)
      YHRS1(1,1)=1.0
      YARS1(1,1)=1.0
      YHCOL1(1,1)=0.76
      YACOL1(1,1)=0.81
      YHRSR1(2,1)=1.0
      YARSR1(2,1)=1.0
      YHRSL1(2,1)=0.76
      YARSL1(2,1)=0.81
      YHCOL1(2,1)=0.87
      YACOL1(2,1)=1.0
      YHRS1(3,1)=0.87
      YARS1(3,1)=1.0
      F1=0.0
      F2=0.0
      J=1
15    DO 150 I=1,M
      A=(-1)**I
      IF(A)151,151,152
151   YHCOL3(I,J)=((V+VDEAD)*YHRS1(I,J)+VB*
     XHAKP1*YHCOL1(I,J))/(V+VDEAD+VB*HAKP2)
      YACOL3(I,J)=((V+VDEAD)*YARS1(I,J)+VB*
     XAAKP1*YACOL1(I,J))/(V+VDEAD+VB*AAKP2)
      YHRS3(I,J)=YHCOL3(I,J)
      YARS3(I,J)=YACOL3(I,J)
      YHRSL3(I+1,J)=(YHRSL1(I+1,J)*VDEAD+V*
     XYHCOL1(I,J))/(V+VDEAD)
```

(...Case 4 continued)

```
      YARSL3(I+1,J)=(YARSL1(I+1,J)*VDEAD+V*YACOL1(I,J))/
     X(V+VDEAD)
      GO TO 150
152   YHCOL3(I,J)=((V+VDEAD)*YHRSR1(I,J)+VB*
     XHCKP2*YHCOL1(I,J))/(V+VDEAD+VB*HCKP3)
      YACOL3(I,J)=((V+VDEAD)*YARSR1(I,J)+VB*
     XACKP2*YACOL1(I,J))/(V+VDEAD+VB*ACKP3)
      YHRSR3(I,J)=YHCOL3(I,J)
      YARSR3(I,J)=YACOL3(I,J)
      YHRS3(I+1,J)=(YHRS1(I+1,J)*VDEAD+V*YHCOL1(I,J))/
     X(V+VDEAD)
      YARS3(I+1,J)=(YARS1(I+1,J)*VDEAD+V*YACOL1(I,J))/
     X(V+VDEAD)
150   CONTINUE
      DO 250 I=1,M
      A=(-1)**I
      IF(A)251,251,252
251   YHRS4(I+2,J)=((V+VDEAD)*YHRS3(I+2,J)+F1*1.0)/
     X(V+VDEAD+F1)
      YARS4(I+2,J)=((V+VDEAD)*YARS3(I+2,J)+F1*1.0)/
     X(V+VDEAD+F1)
      YHRSR4(I+1,J)=(F1*YHRS4(I+2,J)+VDEAD*YHRSR3(I+1,J)+
     XV*YHCOL3(I+1,J))/(V+VDEAD+F1)
      YARSR4(I+1,J)=(F1*YARS4(I+2,J)+VDEAD*YARSR3(I+1,J)+
     XV*YACOL3(I+1,J))/(V+VDEAD+F1)
      YHRS5(I,J)=(YHRS3(I,J)*VDEAD+V*YHCOL3(I,J))/(V+VDEAD)
      YARS5(I,J)=(YARS3(I,J)*VDEAD+V*YACOL3(I,J))/(V+VDEAD)
      WRITE(6,33)YHRS5(I,J),YARS5(I,J)
33    FORMAT(5X,'YHRS5=',E25.5,'YARS5=',E25.5)
      YHCOL5(I,J)=((V+VDEAD)*YHRSR4(I+1,J)+VB*HAKP2*YHCOL3
     X(I,J))/(V+VDEAD+VB*HAKP3)
      YACOL5(I,J)=((V+VDEAD)*YARSR4(I+1,J)+VB*AAKP2*YACOL3
     X(I,J))/(V+VDEAD+VB*AAKP3)
      YHRSR5(I+1,J)=YHCOL5(I,J)
      YARSR5(I+1,J)=YACOL5(I,J)
      GO TO 250
252   YHRSL5(I,J)=YHRSL3(I,J)
      YARSL5(I,J)=YARSL3(I,J)
      YHCOL5(I,J)=((V+VDEAD)*YHRS4(I+1,J)+VB*
     XHCKP3*YHCOL3(I,J))/(V+VDEAD+VB*HCKP2)
      YACOL5(I,J)=((V+VDEAD)*YARS4(I+1,J)+VB*
     XACKP3*YACOL3(I,J))/(V+VDEAD+VB+ACKP2)
      YHRS5(I+1,J)=YHCOL5(I,J)
      YARS5(I+1,J)=YACOL5(I,J)
250   CONTINUE
      DO 350 I=1,M
      A=(-1)**I
      IF(A)351,351,352
351   YHRS6(I,J)=(F2*1.0+(V+VDEAD)*YHRS5(I,J))/(V+VDEAD+F2)
      YARS6(I,J)=(F2*1.0+(V+VDEAD)*YARS5(I,J))/(V+VDEAD+F2)
```

(. . .Case 4 continued)

```
     YHCOL7(I,J)=((V+VDEAD)*YHRS6(I,J)+VB*HAKP3*
    XYHCOL5(I,J))/(V+VDEAD+VB*HAKP2)
     YACOL7(I,J)=((V+VDEAD)*YARS6(I,J)+VB*AAKP3*
    XYACOL5(I,J))/(V+VDEAD+VB*AAKP2)
     YHRS7(I,J)=YHCOL7(I,J)
     YARS7(I,J)=YACOL7(I,J)
     YHRSR7(I+1,J)=(YHRSR5(I+1,J)*VDEAD+V*YHCOL5(I,J)+F2
    X*YHRS6(I,J))/(V+VDEAD+F2)
     YARSR7(I+1,J)=(YARSR5(I+1,J)*VDEAD+V*YACOL5(I,J)+F2
    X*YARS6(I,J))/(V+VDEAD+F2)
     GO TO 350
352  YHCOL7(I,J)=((V+VDEAD)*YHRSL5(I,J)+VB*HCKP2*YHCOL5
    X(I,J))/(V+VDEAD+VB*HCKP1)
     YACOL7(I,J)=((V+VDEAD)*YARSL5(I,J)+VB*ACKP2*YACOL5
    X(I,J))/(V+VDEAD+VB*ACKP1)
     YHRSL7(I,J)=YHCOL7(I,J)
     YARSL7(I,J)=YACOL7(I,J)
     YHRS7(I+1,J)=(YHRS5(I+1,J)*VDEAD+V*YHCOL5(I,J))
    X/(V+VDEAD)
     YARS7(I+1,J)=(YARS5(I+1,J)*VDEAD+V*YACOL5(I,J))/
    X(V+VDEAD)
     WRITE(6,34)YHRS7(I+1,J),YARS7(I+1,J)
34   FORMAT(5X,'YHRS7=',E25.5,'YARS7=',E25.5)
350  CONTINUE
     L=J
     J=J+1
     WRITE(6,11)J
11   FORMAT(2X,'***J=',I10)
     DO 450 I=1,M
     A=(-1)**I
     IF(A)451,451,452
451  YHRS1(I,J)=(YHRS7(I,L)*VDEAD+V*YHCOL7(I,L))/(V+VDEAD)
     YARS1(I,J)=(YARS7(I,L)*VDEAD+V*YACOL7(I,L))/(V+VDEAD)
     YHCOL1(I,J)=(VDEAD*YHRSL7(I+1,L)+V*
    XYHCOL7(I+1,L)+VB*HAKP2*YHCOL7(I,L))/(V+VDEAD+VB*HAKP1)
     YACOL1(I,J)=(VDEAD*YARSL7(I+1,L)+V*YACOL7(I+1,L)+VB
    X*AAKP2*YACOL7(I,L))/(V+VDEAD+VB*AAKP1)
     YHRSL1(I+1,J)=YHCOL1(I,J)
     YARSL1(I+1,J)=YACOL1(I,J)
     YHRSR1(I+1,J)=YHRSR7(I+1,L)
     YARSR1(I+1,J)=YARSR7(I+1,L)
     WRITE(6,222)I
     WRITE(6,13)YHRS1(I,J),YARS1(I,J)
     II=I+1
     WRITE(6,222)II
     WRITE(6,16)YHRSL1(I+1,J),YARSL1(I+1,J),YHRSR1(I+1,J),
    XYARSR1(I+1,J)
 16  FORMAT(5X,'YHRSL1=',E20.5,'YARSL1=',E20.5,'YHRSR1=',
    XE20.5,'YARSR1=',E20.5)
     GO TO 450
452  YHCOL1(I,J)=((V+VDEAD)*YHRS7(I+1,L)+VB*HCKP1
```

(. . .Case 4 continued)

```
     X*YHCOL7(I,L))/(V+VDEAD+VB*HCKP2)
      YACOL1(I,J)=((V+VDEAD)*YARS7(I+1,L)+VB*ACKP1*
     XYACOL7(I,L))/(V+VDEAD+VB*ACKP2)
      YHRS1(I+1,J)=YHCOL1(I,J)
      YARS1(I+1,J)=YACOL1(I,J)
      WRITE(6,222)I
222   FORMAT(2X,'I=',I10)
      WRITE(6,12) YHCOL1(I,J),YACOL1(I,J)
12    FORMAT(5X,'YHCOL1=',E25.5,'YACOL1=',E25.5)
      II=I+1
      WRITE(6,222)II
      WRITE(6,13)YHRS1(I+1,J),YARS1(I+1,J)
13    FORMAT(5X,'YHRS1=',E25,5,'YARS1=',E25.5)
450   CONTINUE
      IF(J-NCYCL)15,14,14
14    F1=F1+3.0
      F2=F2+3.0
      J=1
      IF(F1.EQ.15)GO TO 91
      GO TO 15
91    STOP
      END
```

Figure XXXVII
Flow Diagram of Two-Column Process
CASE 5

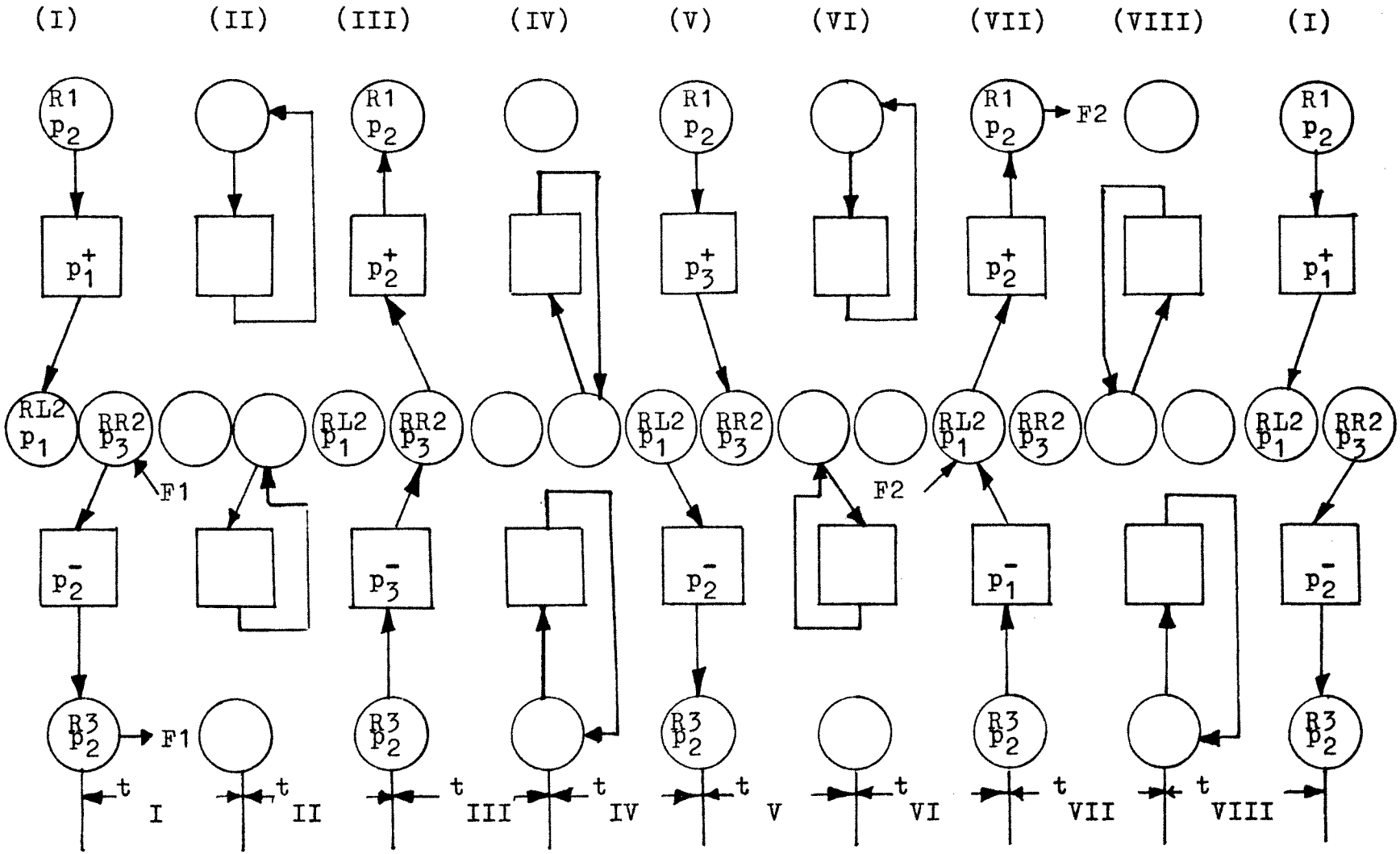

COMPUTER PROGRAM(Case 5)(#VI) 2-Column Process

```
      DIMENSION
     1YHRSR2(2,40),YARSR2(2,40),YHRSL8(2,40),YARSL8(2,40)
      DIMENSION
     1YHRSR1(2,40),YHRSR3(2,40),YHRSR5(2,40),YHRSR7(2,40,
     2YARSR1(2,40),YARSR3(2,40),YARSR5(2,40),YARSR7(2,40)
      DIMENSION
     1YHRSL1(2,40),YHRSL3(2,40),YHRSL5(2,40),YHRSL7(2,40),
     2YARSL1(2,40),YARSL3(2,40),YARSL5(2,40),YARSL7(2,40)
      DIMENSION
     1YHCOL1(2,40),YHCOL3(2,40),YHCOL5(2,40),YHCOL7(2,40),
     2YACOL1(2,40),YACOL3(2,40),YACOL5(2,40),YACOL7(2,40)
      DIMENSION
     1YHRS1(3,40),YHRS3(3,40),YHRS5(3,40),YHRS7(3,40),
     2YARS1(3,40),YARS3(3,40),YARS5(3,40),YARS7(3,40)
      READ(5,10)M,NCYCL
10    FORMAT(7I10)
      READ(5,20)YHAO,YAAO,YHCO, YACO,V,VDEAD,VB,
     1HAKP1,HCKP1,AAKP1,ACKP1,
     2HAKP2,HCKP2,AAKP2,ACKP2,
     3HAKP3,HCKP3,AAKP3,ACKP3
20    FORMAT(7F10.3)
      YHRS1(1,1)=1.0
      YARS1(1,1)=1.0
      YHCOL1(1,1)=0.76
      YACOL1(1,1)=0.81
      YHRSR1(2,1)=1.0
      YARSR1(2,1)=1.0
      YHRSL1(2,1)=0.76
      YARSL1(2,1)=0.81
      YHCOL1(2,1)=0.87
      YACOL1(2,1)=1.0
      YHRS1(3,1)=0.87
      YARS1(3,1)=1.0
      F1=0.0
      F2=0.0
      J=1
15    DO 150 I=1,M
      A=(-1)**I
      IF(A)151,151,152
151   YHCOL3(I,J)=((V+VDEAD)*YHRS1(I,J)+VB*
     XHAKP1*YHCOL1(I,J))/(V+VDEAD+VB*HAKP2)
      YACOL3(I,J)=((V+VDEAD)*YARS1(I,J)+VB*
     XAAKP1*YACOL1(I,J))/(V+VDEAD+VB*AAKP2)
      YHRS3(I,J)=YHCOL3(I,J)
      YARS3(I,J)=YACOL3(I,J)
      YHRSL3(I+1,J)=(YHRSL1(I+1,J)*VDEAD+V*YHCOL1(I,J))/
     X(V+VDEAD)
      YARSL3(I+1,J)=(YARSL1(I+1,J)*VDEAD+V*YACOL1(I,J))/
     X(V+VDEAD)
      GO TO150
152   YHRSR2(I,J)=((V+VDEAD)*YHRSR1(I,J)+F1*1.0)/(V+VDEAD
     X+F1)
```

```
(Case 5 continued)
     YARSR2(I,J)=((V+VDEAD)*YARSR1(I,J)+F1*1.0)/
    X(V+VDEAD+F1)
     YHCOL3(I,J)=((V+VDEAD)*YHRSR2(I,J)+VB*HCKP2*
    XYHCOL1(I,J))/(V+VDEAD+VB*HCKP3)
     YACOL3(I,J)=((V+VDEAD)*YARSR2(I,J)+VB*ACKP2*
    XYACOL1(I,J))/(V+VDEAD+VB*ACKP3)
     YHRSR3(I,J)=YHCOL3(I,J)
     YARSR3(I,J)=YACOL3(I,J)
     YHRS3(I+1,J)=(YHRS1(I+1,J)*VDEAD+V*YHCOL1(I,J)+F1
    X*YHRSR2(I,J))/(V+VDEAD+F1)
     YARS3(I+1,J)=(YARS1(I+1,J)*VDEAD+V*YACOL1(I,J)+F1
    X*YARSR2(I,J))/(V+VDEAD+F1)
150  CONTINUE
     DO 250 I=1,M
     A=(-1)**I
     IF(A)251,251,252
251  YHRS5(I,J)=(YHRS3(I,J)*VDEAD+V*YHCOL3(I,J))/(V+VDEAD)
     YARS5(I,J)=(YARS3(I,J)*VDEAD+V*YACOL3(I,J))/(V+VDEAD)
     WRITE(6,33)YHRS5(I,J),YARS5(I,J)
33   FORMAT(5X,'YHRS5=',E25.5,'YARS5=',E25.5)
     YHCOL5(I,J)=(VDEAD*YHRSR3(I+1,J)+VB*HAKP2*YHCOL3(I,J)
    X+V*YHCOL3(I+1,J))/(V+VDEAD+VB*HAKP3)
     YACOL5(I,J)=(VDEAD*YARSR3(I+1,J)+VB*AAKP2*YACOL3(I,J)
    X+V*YACOL3(I+1,J))/(V+VDEAD+VB*AAKP3)
     YHRSR5(I+1,J)=YHCOL5(I,J)
     YARSR5(I+1,J)=YACOL5(I,J)
     GO TO 250
252  YHRSL5(I,J)=YHRSL3(I,J)
     YARSL5(I,J)=YARSL3(I,J)
     YHCOL5(I,J)=((V+VDEAD)*YHRS3(I+1,J)+VB*
    XHCKP3*YHCOL3(I,J))/(V+VDEAD+VB*HCKP2)
     YACOL5(I,J)=((V+VDEAD)*YARS3(I+1,J)+VB*
    XACKP3*YACOL3(I,J))/(V+VDEAD+VB*ACKP2)
     YHRS5(I+1,J)=YHCOL5(I,J)
     YARS5(I+1,J)=YACOL5(I,J)
250  CONTINUE
     DO 350 I=1,M
     A=(-1)**I
     IF(A)351,351,352
351  YHCOL7(I,J)=((V+VDEAD)*YHRS5(I,J)+VB*HAKP3*
    XYHCOL5(I,J))/(V+VDEAD+VB*HAKP2)
     YACOL7(I,J)=((V+VDEAD)*YARS5(I,J)+VB*AAKP3*
    XYACOL5(I,J))/(V+VDEAD+VB*AAKP2)
     YHRS7(I,J)=YHCOL7(I,J)
     YARS7(I,J)=YACOL7(I,J)
     YHRSR7(I+1,J)=(YHRSR5(I+1,J)*VDEAD+V*YHCOL5(I,J))/
    X(V+VDEAD)
     YARSR7(I+1,J)=(YARSR5(I+1,J)*VDEAD+V*YACOL5(I,J))/
    X(V+VDEAD)
     GO TO 350
352  YHCOL7(I,J)=((V+VDEAD)*YHRSL5(I,J)+VB*HCKP2*YHCOL5
    X(I,J))/(V+VDEAD+VB*HCKP1)
     YACOL7(I,J)=((V+VDEAD)*YARSL5(I,J)+VB*ACKP2*YACOL5
```

```
(Case 5 continued)
   X(I,J))/(V+VDEAD+VB*ACKP1)
    YHRSL7(I,J)=YHCOL7(I,J)
    YARSL7(I,J)=YACOL7(I,J)
    YHRS7(I+1,J)=(YHRS5(I+1,J)*VDEAD+V*YHCOL5(I,J))
   X/(V+VDEAD)
    YARS7(I+1,J)=(YARS5(I+1,J)*VDEAD+V*YACOL5(I,J))
   X/(V+VDEAD)
    WRITE(6,34)YHRS7(I+1,J),YARS7(I+1,J)
34  FORMAT(5X,'YHRS7=',E25.5,'YARS7=',E25.5)
350 CONTINUE
    L=J
    J=J+1
    WRITE(6,11)J
11  FORMAT(2X,'***J=',I10)
    DO 450 I=1,M
    A=(-1)**I
    IF(A)451,451,452
451 YHRSL8(I+1,L)=(F2*1.0+VDEAD*YHRSL7(I+1,L)+V*
   XYHCOL7(I+1,L))/(V+VDEAD+F2)
    YARSL8(I+1,L)=(F2*1.0+VDEAD*YARSL7(I+1,L)+V*
   XYACOL7(I+1,L))/(V+VDEAD+F2)
    YHRS1(I,J)=(YHRS7(I,L)*VDEAD+V*YHCOL7(I,L)+F2*
   XYHRSL8(I+1,L))/(V+VDEAD+F2)
    YARS1(I,J)=(YARS7(I,L)*VDEAD+V*YACOL7(I,L)+F2*
   XYARSL8(I+1,L))/(V+VDEAD+F2)
    YHCOL1(I,J)=((V+VDEAD)*YHRSL8(I+1,L)+VB*HAKP2*YHCOL7
   X(I,L))/(V+VDEAD+VB*HAKP1)
    YACOL1(I,J)=(VDEAD*YARSL8(I+1,L)+V *YARSL8(I+1,L)+VB
   X*AAKP2*YACOL7(I,L))/(V+VDEAD+VB*AAKP1)
    YHRSL1(I+1,J)=YHCOL1(I,J)
    YARSL1(I+1,J)=YACOL1(I,J)
    YHRSR1(I+1,J)=YHRSR7(I+1,L)
    YARSR1(I+1,J)=YARSR7(I+1,L)
    WRITE(6,222)I
    WRITE(6,13)YHRS1(I,J),YARS1(I,J)
    II=I+1
    WRITE(6,222)II
    WRITE(6,16)YHRSL1(I+1,J),YARSL1(I+1,J),YHRSR1(I+1,J),
   XYARSR1(I+1,J)
16  FORMAT(5X,'YHRSL1=',E20.5,'YARSL1=',E20.5,'YHRSR1=',
   XE20.5,'YARSR1=',E20.5)
    GO TO 450
452 YHCOL1(I,J)=((V+VDEAD)*YHRS7(I+1,L)+VB*HCKP1
   X*YHCOL7(I,L))/(V+VDEAD+VB*HCKP2)
    YACOL1(I,J)=((V+VDEAD)*YARS7(I+1,L)+VB*ACKP1*
   XYACOL7(I,L))/(V+VDEAD+VB*ACKP2)
    YHRS1(I+1,J)=YHCOL1(I,J)
    YARS1(I+1,J)=YACOL1(I,J)
    WRITE(6,222)I
222 FORMAT(2X,'I=',I10)
    WRITE(6,12)YHCOL1(I,J),YACOL1(I,J)
12  FORMAT(5X,'YHCOL1=',E25.5,'YACOL1=',E25.5)
    II=I+1
```

(Case 5 continued)

```
      WRITE(6,222)II
      WRITE(6,13)YHRS1(I+1,J),YARS1(I+1,J)
13    FORMAT(5X, 'YHRS1=',E25.5,'YARS1=',E25.5)
450   CONTINUE
      IF(J-NCYCL) 15,14,14
14    F1=F1+3.0
      F2=F2+3.0
      J=1
      IF(F1.EQ.15) GO TO 91
      GO TO 15
91    STOP
      END
```

FigureXXXVIII

Flow Diagram of Two-Column Process

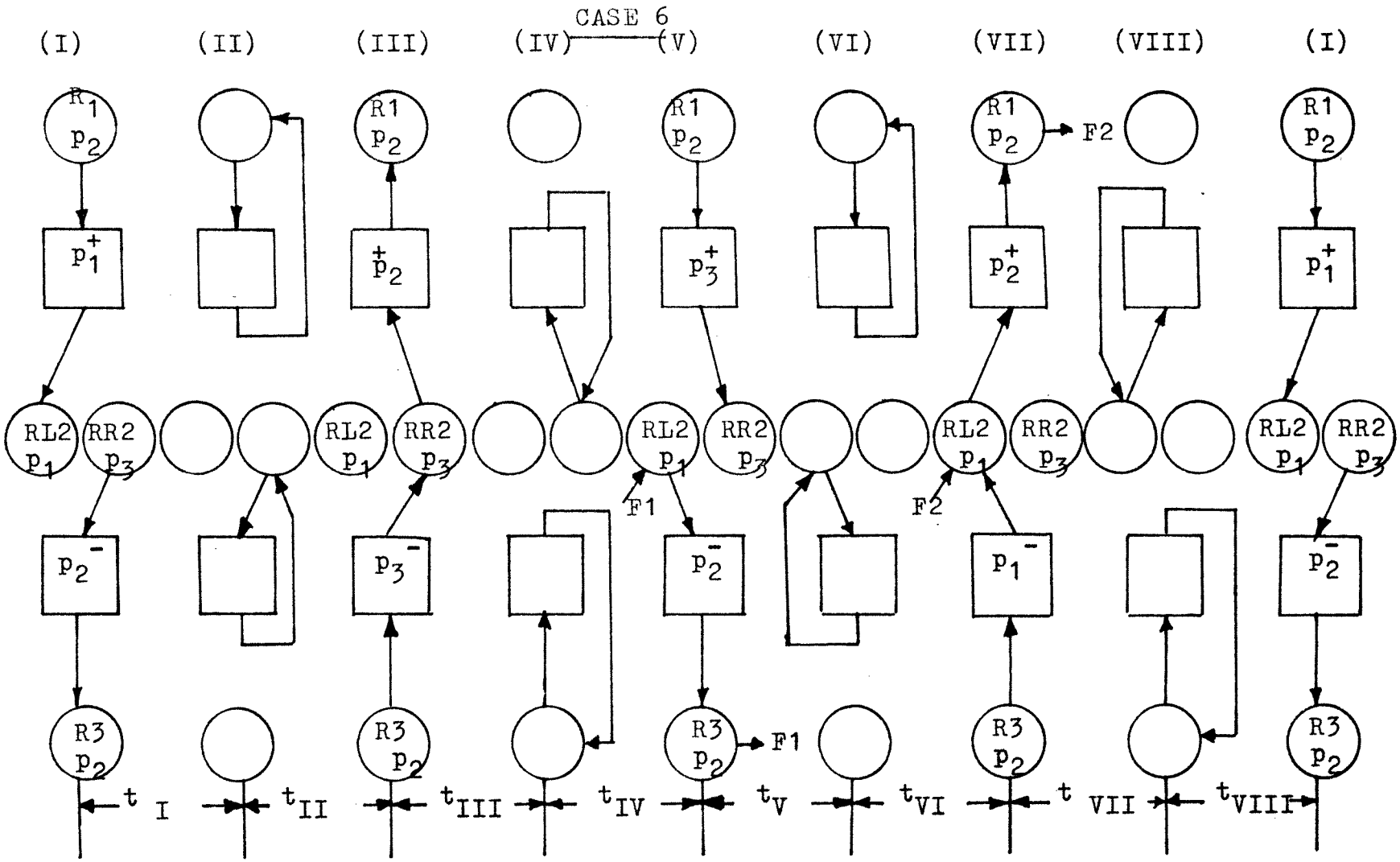

COMPUTER PROGRAM (CASE 6) #VII.

Two- Column Process

```
      DIMENSION
     1YHRSL8(2,40),YARSL8(2,40),YHRSL6(2,40),YARSL6(2,40)
      DIMENSION
     1YHRSR1(2,40),YHRSR3(2,40),YHRSR5(2,40),YHRSR7(2,40),
     2YARSR1(2,40),YARSR3(2,40),YARSR5(2,40),YARSR7(2,40)
      DIMENSION
     1YHRSL1(2,40),YHRSL3(2,40),YHRSL5(2,40),YHRSL7(2,40),
     2YARSL1(2,40),YARSL3(2,40),YARSL5(2,40),YARSL7(2,40)
      DIMENSION
     1YHCOL1(2,40), YHCOL3(2,40),YHCOL5(2,40),YHCOL7(2,40),
     2YACOL1(2,40),YACOL3(2,40),YACOL5(2,40),YACOL7(2,40)
      DIMENSION
     1YHRS1(3,40),YHRS3(3,40),YHRS5(3,40),YHRS7(3,40),
     2YARS1(3,40),YARS3(3,40),YARS5(3,40),YARS7(3,40)
      READ(5,10)M,NCYCL
10    FORMAT(7I10)
      READ(5,20)YHAO,YAAO,YHCO,YACO,V,VDEAD,VB,
     1HAKP1,HCKP1,AAKP1,ACKP1,
     2HAKP2,HCKP2,AAKP2,ACKP2,
     3HAKP3,HCKP3,AAKP3,ACKP3
20    FORMAT(7F10.3)
      YHRS1(1,1)=1.0
      YARS1(1,1)=1.0
      YHCOL1(1,1)=0.76
      YACOL1(1,1)=0.81
      YHRSR1(2,1)=1.0
      YARSR1(2,1)=1.0
      YHRSL1(2,1)=0.76
      YARSL1(2,1)=0.81
      YHCOL1(2,1)=0.87
      YACOL1(2,1)=1.0
      YHRS1(3,1)=0.87
      YARS1(3,1)=1.0
      F1=0.0
      F2=0.0
```

```
(CASE 6 continued)
      J=1
15    DO150 I=1,M
      A=(-1)**I
      IF(A)151,151,152
151   YHCOL3(I,J)=((V+VDEAD)*YHRS1(I,J)+VB*
     XHAKP1*YHCOL1(I,J))/(V+VDEAD+VB*HAKP2)
      YACOL3(I,J)=((V+VDEAD)*YARS1(I,J)+VB*
     XAAKP1*YACOL1(I,J))/(V+VDEAD+VB*AAKP2)
      YHRS3(I,J)=YHCOL3(I,J)
      YARS3(I,J)=YACOL3(I,J)
      YHRSL3(I+1,J)=(YHRSL1(I+1,J)*VDEAD+V*YHCOL1(I,J))/
     X(V+VDEAD)
      YARSL3(I+1,J)=(YARSL1(I+1,J)*VDEAD+V*YACOL1(I,J))/
     X(V+VDEAD)
      GO TO 150
152   YHCOL3(I,J)=((V+VDEAD)*YHRSR1(I,J)+VB*
     XHCKP2*YHCOL1(I,J))/(V+VDEAD+VB*HCKP3)
      YACOL3(I,J)=((V+VDEAD)*YARSR1(I,J)+VB*
     XACKP2*YACOL1(I,J))/(V+VDEAD+VB*ACKP3)
      YHRSR3(I,J)=YHCOL3(I,J)
      YARSR3(I,J)=YACOL3(I,J)
      YHRS3(I+1,J)=(YHRS1(I+1,J)*VDEAD+V*YHCOL1(I,J))/
     X(V+VDEAD)
      YARS3(I+1,J)=(YARS1(I+1,J)*VDEAD+V*YACOL1(I,J))/
     X(V+VDEAD)
150   CONTINUE
      DO 250 I=1,M
      A=(-1)**I
      IF(A)251,251,252
251   YHRS5(I,J)=(YHRS3(I,J)*VDEAD+V*YHCOL3(I,J))/(V+VDEAD)
      YARS5(I,J)=(YARS3(I,J)*VDEAD+V*YACOL3(I,J))/(V+VDEAD)
      WRITE(6,33)YHRS5(I,J),YARS5(I,J)
33    FORMAT(5X,'YHRS5=',E25.5,'YARS5=',E25.5)
      YHCOL5(I,J)=(VDEAD*YHRSR3(I+1,J)+VB*HAKP2*YHCOL3(I,J)
     X+V*YHCOL3(I+1,J))/(V+VDEAD+VB*HAKP3)
      YACOL5(I,J)=(VDEAD*YARSR3(I+1,J)+VB*AAKP2*YACOL3(I,J)
     X+V*YACOL3(I+1,J))/(V+VDEAD+VB*AAKP3)
      YHRSR5(I+1,J)=YHCOL5(I,J)
      YARSR5(I+1,J)=YACOL5(I,J)
      GO TO 250
252   YHRSL5(I,J)=YHRSL3(I,J)
      YARSL5(I,J)=YARSL3(I,J)
      YHCOL5(I,J)=((V+VDEAD)*YHRS3(I+1,J)+VB*
     XHCKP3*YHCOL3(I,J))/(V+VDEAD+VB*HCKP2)
      YACOL5(I,J)=((V+VDEAD)*YARS3(I+1,J)+VB*
     XACKP3*YACOL3(I,J))/(V+VDEAD+VB*ACKP2)
      YHRS5(I+1,J)=YHCOL5(I,J)
      YARS5(I+1,J)=YACOL5(I,J)
250   CONTINUE
      DO 350 I=1,M
```

```
(CASE 6 continued)
     A=(-1)**I
     IF(A)351,351,352
351  YHRSL6(I+1,J)=((V+VDEAD)*YHRSL5(I+1,J)+F1*1.0)/
    X(V+VDEAD+F1)
     YARSL6(I+1,J)=((V+VDEAD)*YARSL5(I+1,J)+F1*1.0)/
    X(V+VDEAD+F1)
     YHCOL7(I,J)=((V+VDEAD)*YHRS5(I,J)+VB*HAKP3*
    XYHCOL5(I,J))/(V+VDEAD+VB*HAKP2)
     YACOL7(I,J)=((V+VDEAD)*YARS5(I,J)+VB*AAKP3*
    XYACOL5(I,J))/(V+VDEAD+VB*AAKP2)
     YHRS7(I,J)=YHCOL7(I,J)
     YARS7(I,J)=YACOL7(I,J)
     YHRSR7(I+1,J)=(YHRSR5(I+1,J)*VDEAD+V*YHCOL5(I,J))/
    X(V+VDEAD)
     YARSR7(I+1,J)=(YARSR5(I+1,J)*VDEAD+V*YACOL5(I,J))/
    X(V+VDEAD)
     GO TO 350
352  YHCOL7(I,J)=((V+VDEAD)*YHRSL6(I,J)+VB*HCKP2*YHCOL5
    X(I,J))/(V+VDEAD+VB*HCKP1)
     YACOL7(I,J)=((V+VDEAD)*YARSL6(I,J)+VB*ACKP2*YACOL5
    X(I,J))/(V+VDEAD+VB*ACKP1)
     YHRSL7(I,J)=YHCOL7(I,J)
     YARSL7(I,J)=YACOL7(I,J)
     YHRS7(I+1,J)=(YHRS5(I+1,J)*VDEAD+V*YHCOL5(I,J)+F1*
    XYHRSL6(I,J))/(V+VDEAD+F1)
     YARS7(I+1,J)=(YARS5(I+1,J)*VDEAD+V*YACOL5(I,J)+F1*
    XYARSL6(I,J))/(V+VDEAD+F1)
     WRITE(6,34)YHRS7(I+1,J),YARS7(I+1,J)
34   FORMAT(5X,'YHRS7=', E25.5,'YARS7=',E25.5)
350  CONTINUE
     L=J
     J=J+1
     WRITE(6,11)J
11   FORMAT(2X,'***J=',I10)
     DO 450 I=1,M
     A=(-1)**I
     IF(A)451,451,452
451  YHRSL8(I+1,L)=(F2*1.0+VDEAD*YHRSL7(I+1,L)+V*YHCOL7
    X(I+1,L))/(V+VDEAD+F2)
     YARSL8(I+1,L)=(F2*1.0+VDEAD*YARSL7(I+1,L)+V*YACOL7
    X(I+1,L))/(V+VDEAD+F2)
     YHRS1(I,J)=(YHRS7(I,L)*VDEAD+V*YHCOL7(I,L)+F2*YHRSL8
    X(I+1,L))/(V+VDEAD+F2)
     YARS1(I,J)=(YARS7(I,L)*VDEAD+V*YACOL7(I,L)+F2*YARSL8
    X(I+1,L))/(V+VDEAD+F2)
     YHCOL1(I,J)=((VDEAD+V)*YHRSL8(I+1,L)+VB*HAKP2*YHCOL7
    X(I,L))/(V+VDEAD+VB*HAKP1)
     YACOL1(I,J)=((V+VDEAD)*YARSL8(I+1,L)+VB*AAKP2*YACOL7
    X(I,L))/(V+VDEAD+VB*AAKP1)
     YHRSL1(I+1,J)=YHCOL1(I,J)
     YARSL1(I+1,J)=YACOL1(I,J)
     YHRSR1(I+1,J)=YHRSR7(I+1,L)
     YARSR1(I+1,J)=YARSR7(I+1,L)
```

(Case 6 continued)

```
      WRITE(6,222)I
      WRITE(6,13)YHRS1(I,J),YARS1(I,J)
      II=I+1
      WRITE(6,222)II
      WRITE(6,16)YHRSL1(I+1,J),YARSL1(I+1,J),YHRSR1(I+1,),
     XYARSR1(I+1,J)
16    FORMAT(5X,'YHRSL1=',E20.5,'YARSL1=',E20.5,'YHRSR1=',
     XE20.5,'YARSR1=',E20.5)
      GO TO 450
452   YHCOL1(I,J)=((V+VDEAD)*YHRS7(I+1,L)+VB*HCKP1
     X*YHCOL7(I,L))/(V+VDEAD+VB*HCKP2)
      YACOL1(I,J)=((V+VDEAD)*YARS7(I+1,L)+VB*ACKP1
     X*YACOL7(I,L))/(V+VDEAD+VB*ACKP2)
      YHRS1(I+1,J)=YHCOL1(I,J)
      YARS1(I+1,J)=YACOL1(I,J)
      WRITE(6,222)I
222   FORMAT(2X,'I=',I10)
      WRITE(6,12)YHCOL1(I,J),YACOL1(I,J)
12    FORMAT(5X,'YHCOL1=',E25.5,'YACOL1=',E25.5)
      II=I+1
      WRITE(6,222)II
      WRITE(6,13)YHRS1(I+1,J),YARS1(I+1,J)
13    FORMAT(5X,'YHRS1=',E25.5,'YARS1=',E25.5)
450   CONTINUE
      IF(J-NCYCL)15,14, 14
14    F1=F1+3.0
      F2=F2+3.0
      J=1
      IF(F1.EQ.15)GO TO 91
      GO TO 15
91    STOP
      END
```

Figure XXXIX

Flow Diagram of Two-Column Process

CASE 7

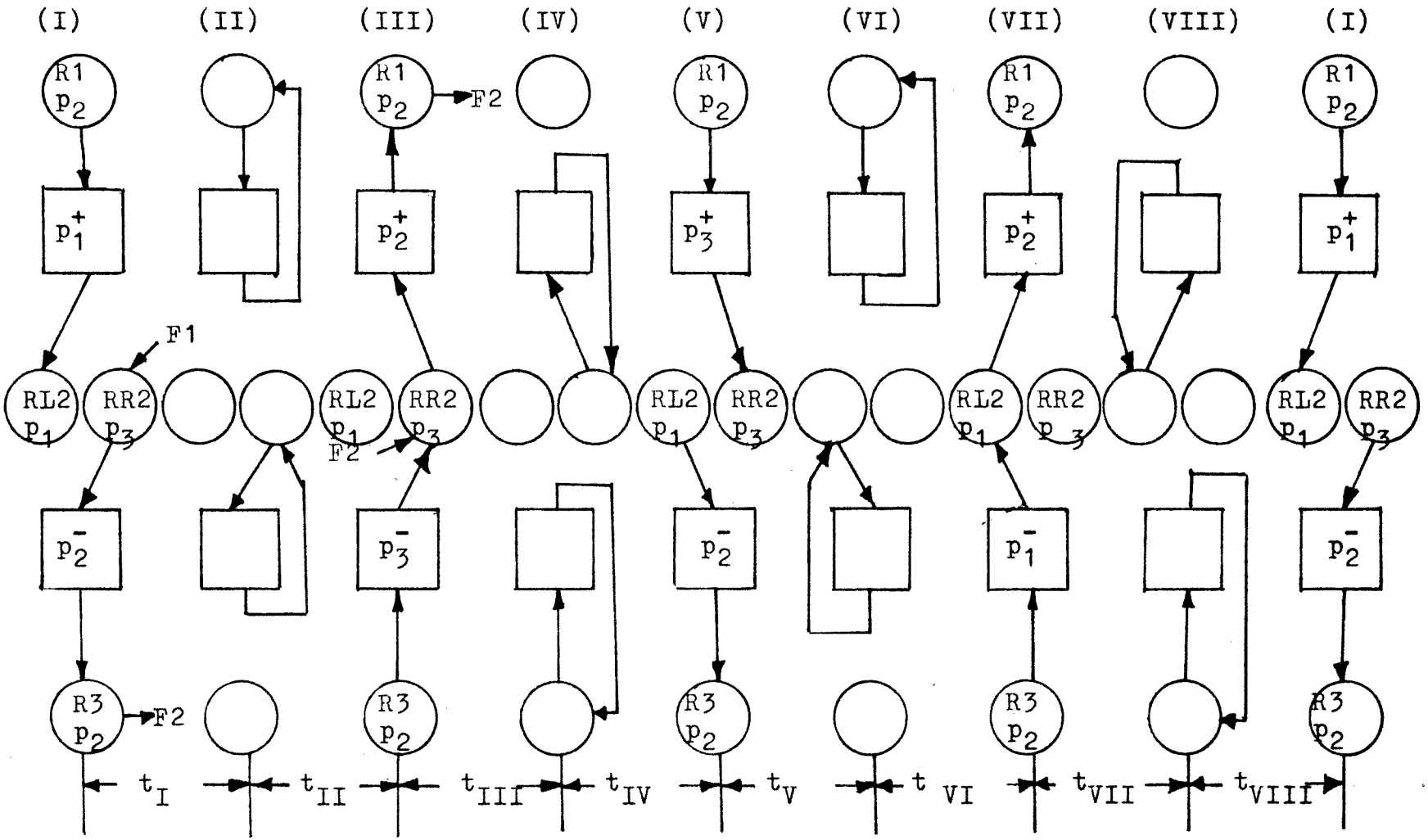

COMPUTER PROGRAM (Case 7) #VIII.

Two-Column Process

```
 DIMENSION
1YHRSR2(2,40),YARSR2(2,40),YHRSR4(2,40),YARSR4(2,40)
 DIMENSION
1YHRSR1(2,40),YHRSR3(2,40),YHRSR5(2,40),YHRSR7(2,40),
2YARSR1(2,40),YARSR3(2,40),YARSR5(2,40),YARSR7(2,40)
 DIMENSION
1YHRSL1(2,40),YHRSL3(2,40),YHRSL5(2,40),YHRSL7(2,40),
2YARSL1(2,40),YARSL3(2,40),YARSL5(2,40),YARSL7(2,40)
 DIMENSION
1YHCOL1(2,40),YHCOL3(2,40),YHCOL5(2,40),YHCOL7(2,40),
2YACOL1(2,40),YACOL3(2,40),YACOL5(2,40),YACOL7(2,40)
 DIMENSION
1YHRS1(3,40),YHRS3(3,40),YHRS5(3,40),YHRS7(3,40),
2YARS1(3,40),YARS3(3,40),YARS5(3,40),YARS7(3,40)
 READ(5,10)M,NCYCL
```

```
10  FORMAT(7I10)
    READ(5,20)YHAO,YAAO,YHCO,YACO,V,VDEAD,VB,
   1HAKP1,HCKP1,AAKP1,ACKP1,
   2HAKP2,HCKP2,AAKP2,ACKP2,
   3HAKP3,HCKP3,AAKP3,ACKP3
20  FORMAT(7F10.3)
    YHRS1(1,1)=1.0
    YARS1(1,1)=1.0
    YHCOL1(1,1)=0.76
    YACOL1(1,1)=0.81
    YHRSR1(2,1)=1.0
    YARSR1(2,1)=1.0
    YHRSL1(2,1)=0.76
    YARSL1(2,1)=0.81
    YHCOL1(2,1)=0.87
    YACOL1(2,1)=1.0
    YHRS1(3,1)=0.87
    YARS1(3,1)=1.0
    F1=0.0
    F2=0.0
    J=1
15  DO 150 I=1,M
    A=(-1)**I
    IF(A)151,151,152
151 YHCOL3(I,J)=((V+VDEAD)*YHRS1(I,J)+VB*
   XHAKP1*YHCOL1(I,J))/(V+VDEAD+VB*HAKP2)
    YACOL3(I,J)=((V+VDEAD)*YARS1(I,J)+VB*
   XAAKP1*YACOL1(I,J))/(V+VDEAD+VB*AAKP2)
    YHRS3(I,J)=YHCOL3(I,J)
    YARS3(I,J)=YACOL3(I,J)
    YHRSL3(I+1,J)=(YHRSL1(I+1,J)*VDEAD+V*YHCOL1(I,J))/
   X(V+VDEAD)
    YARSL3(I+1,J)=(YARSL1(I+1,J)*VDEAD+V*YACOL1(I,J))/
   X(V+VDEAD)
    GO TO 150
152 YHRSR2(I,J)=(F2*1.0+(V+VDEAD)*YHRSR1(I,J))/(V+VDEAD
   X+F2)
    YARSR2(I,J)=(F2*1.0+(V+VDEAD)*YARSR1(I,J))/(V+VDEAD
   X+F2)
    YHCOL3(I,J)=((V+VDEAD)*YHRSR2(I,J)+VB*HCKP2*YHCOL1(I,J
   X))/(V+VDEAD+VB*HCKP3)
    YACOL3(I,J)=((V+VDEAD)*YARSR2(I,J)+VB*
   XACKP2*YACOL1(I,J))/(V+VDEAD+VB*ACKP3)
    YHRSR3(I,J)=YHCOL3(I,J)
    YARSR3(I,J)=YACOL3(I,J)
    YHRS3(I+1,J)=(YHRS1(I+1,J)*VDEAD+V*YHCOL1(I,J)+F2
   X*YHRSR2(I,J))/(V+VDEAD+F2)
    YARS3(I+1,J)=(YARS1(I+1,J)*VDEAD+V*YACOL1(I,J)+F2
   X*YARSR2(I,J))/(V+VDEAD+F2)
150 CONTINUE
    DO 250 I=1,M
    A=(-1)**I
    IF(A)251,251,252
```

```
(Case 7 continued)
251 YHRSR4(I+1,J)=(F1*1.0+VDEAD*YHRSR3(I+1,J)+V*
   XYHCOL3(I+1,J))/(V+VDEAD+F1)
    YARSR4(I+1,J)=(F1*1.0+VDEAD*YARSR3(I+1,J)+V*
   XYACOL3(I+1,J))/(V+VDEAD+F1)
    YHRS5(I,J) =(YHRS3(I,J)*VDEAD+V*YHCOL3(I,J)+F1*
   XYHRSR4(I+1,J))/(V+VDEAD+F1)
    YARS5(I,J) =(YARS3(I,J)*VDEAD+V*YACOL3(I,J)+F1*
   XYARSR4(I+1,J))/(V+VDEAD+F1)
    WRITE(6,33)YHRS5(I,J),YARS5(I,J)
33  FORMAT(5X,'YHRS5=',E25.5,'YARS5=',E25.5)
    YHCOL5(I,J)=((V+VDEAD)*YHRSR4(I+1,J)+VB*HAKP2*
   XYHCOL3(I,J))/(V+VDEAD+VB*HAKP3)
    YACOL5(I,J)=((V+VDEAD)*YARSR4(I+1,J)+VB*AAKP2*
   XYACOL3(I,J))/(V+VDEAD+VB*AAKP3)
    YHRSR5(I+1,J)=YHCOL5(I,J)
    YARSR5(I+1,J)=YACOL5(I,J)
    GO TO 250
252 YHRSL5(I,J)=YHRSL3(I,J)
    YARSL5(I,J)=YARSL3(I,J)
    YHCOL5(I,J)=((V+VDEAD)*YHRS3(I+1,J)+VB*
   XHCKP3*YHCOL3(I,J))/(V+VDEAD+VB*HCKP2)
    YACOL5(I,J)=((V+VDEAD)*YARS3(I+1,J)+VB*
   XACKP3*YACOL3(I,J))/(V+VDEAD+VB*ACKP2)
    YHRS5(I+1,J)=YHCOL5(I,J)
    YARS5(I+1,J)=YACOL5(I,J)
250 CONTINUE
    DO 350 I=1,M
    A=(-1)**I
    IF(A)351,351,352
351 YHCOL7(I,J)=((V+VDEAD)*YHRS5(I,J)+VB*HAKP3*
   XYHCOL5(I,J))/(V+VDEAD+VB*HAKP2)
    YACOL7(I,J)=((V+VDEAD)*YARS5(I,J)+VB*AAKP3*
   XYACOL5(I,J))/(V+VDEAD+VB*AAKP2)
    YHRS7(I,J)=YHCOL7(I,J)
    YARS7(I,J)=YACOL7(I,J)
    YHRSR7(I+1,J)=(YHRSR5(I+1,J)*VDEAD+V*YHCOL5(I,J))/
   X(V+VDEAD)
    YARSR7(I+1,J)=(YARSR5(I+1,J)*VDEAD+V*YACOL5(I,J))/
   X(V+VDEAD)
    GO TO 350
352 YHCOL7(I,J)=((V+VDEAD)*YHRSL5(I,J)+VB*HCKP2*YHCOL5
   X(I,J))/(V+VDEAD+VB*HCKP1)
    YACOL7(I,J)=((V+VDEAD)*YARSL5(I,J)+VB*ACKP2*YACOL5
   X(I,J))/(V+VDEAD+VB*ACKP1)
    YHRSL7(I,J)=YHCOL7(I,J)
    YARSL7(I,J)=YACOL7(I,J)
    YHRS7(I+1,J)=(YHRS5(I+1,J)*VDEAD+V*YHCOL5(I,J))/
   X(V+VDEAD)
    YARS7(I+1,J)=(YARS5(I+1,J)*VDEAD+V*YACOL5(I,J))/
   X(V+VDEAD)
    WRITE(6,34)YHRS7(I+1,J).YARS7(I+1,J)
34  FORMAT(5X,'YHRS7=',E25.5,'YARS7=',E25.5)
350 CONTINUE
```

(Case 7 continued)

```
      L=J
      J=J+1
      WRITE(6,11)J
11    FORMAT(2X,'***J=',I10)
      DO 450 I=1,M
      A=(-1)**I
      If(A)451,451,452
451   YHRS1(I,J)=(YHRS7(I,L)*VDEAD+V*YHCOL7(I,L))/(V+VDEAD)
      YARS1(I,J)=(YARS7(I,L)*VDEAD+V*YACOL7(I,L))/(V+VDEAD)
      YHCOL1(I,J)=(VDEAD*YHRSL7(I+1,L)+V*YHCOL7(I+1,L)
     X+VB*HAKP2*YHCOL7(I,L))/(V+VDEAD+VB*HAKP1)
      YACOL1(I,J)=(VDEAD*YARSL7(I+1,L)+V*YACOL7(I+1,L)
     X+VB*AAKP2*YACOL7(I,L))/(V+VDEAD+VB*AAKP1)
      YHRSL1(I+1,J)=YHCOL1(I,J)
      YARSL1(I+1,J)=YACOL1(I,J)
      YHRSR1(I+1,J)=YHRSR7(I+1,L)
      YARSR1(I+1,J)=YARSR7(I+1,L)
      WRITE(6,222)I
      WRITE(6,13)YHRS1(I,J),YARS1(I,J)
      II=I+1
      WRITE(6,222)II
      WRITE(6,16)YHRSL1(I+1,J),YARSL1(I+1,J),YHRSR1(I+1,J),
     XYARSR1(I+1,J)
16    FORMAT(5X,'YHRSL1=',E20.5,'YARSL1=',E20.5,'YHRSR1=',
     XE20.5,'YARSR1=',E20.5)
      GO TO 450
452   YHCOL1(I,J)=((V+VDEAD)*YHRS7(I+1,L)+VB*HCKP1
     X*YHCOL7(I,L))/(V+VDEAD+VB*HCKP2)
      YACOL1(I,J)=((V+VDEAD)*YARS7(I+1,L)+VB*ACKP1
     X*YACOL7(I,L))/(V+VDEAD+VB*ACKP2)
      YHRS1(I+1,J)=YHCOL1(I,J)
      YARS1(I+1,J)=YACOL1(I,J)
      WRITE(6,222)I
222   FORMAT(2X,'I=',I10)
      WRITE(6,12)YHCOL1(I,J),YACOL1(I,J)
12    FORMAT(5X,'YHCOL1=',E25.5,'YACOL1=',E25.5)
      II=I+1
      WRITE(6,222)II
      WRITE(6,13)YHRS1(I+1,J),YARS1(I+1,J)
13    FORMAT(5X,'YHRS1=',E25.5,'YARS1=',E25.5)
450   CONTINUE
      IF(J-NCYCL)15,14,14
14    F1=F1+3.0
      F2=F2+3.0
      J=1
      IF(F1.EQ.15)GO TO 91
      GO TO 15
91    STOP
      END
```

Figure XL

Flow Diagram of the 3-Column Process Showing Volumetric Flow During Each Stage (F1=F2=0.0)

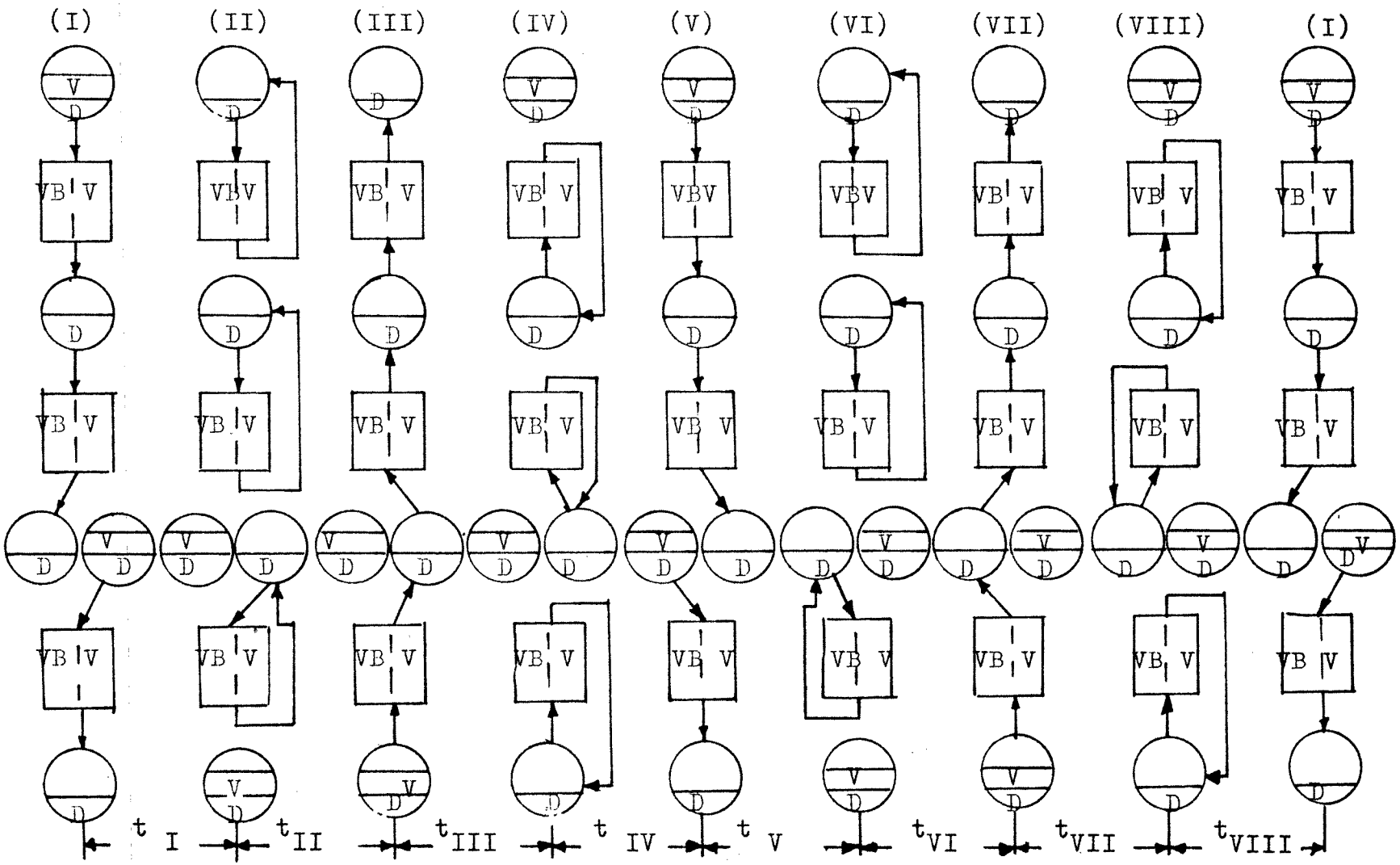

COMPUTER PROGRAM #IX

Three-Column Batch Process

```
      DIMENSION
     1YHRSL1(3,40),YHRSL2(3,40),YHRSL3(3,40),YHRSL4(3,40),
     2YHRSL5(3,40),YHRSL6(3,40),YHRSL7(3,40),YHRSL8(3,40),
     3YARSL1(3,40),YARSL2(3,40),YARSL3(3,40),YARSL4(3,40),
     4YARSL5(3,40),YARSL6(3,40),YARSL7(3,40),YARSL8(3,40)
      DIMENSION
     1YHCOL1(3,40),YHCOL2(3,40),YHCOL3(3,40),YHCOL4(3,40),
     2YHCOL5(3,40),YHCOL6(3,40),YHCOL7(3,40),YHCOL8(3,40),
     3YACOL1(3,40),YACOL2(3,40),YACOL3(3,40),YACOL4(3,40),
     4YACOL5(3,40),YACOL6(3,40),YACOL7(3,40),YACOL8(3,40)
      DIMENSION
     1YHRS2(4,40),YHRS4(4,40),YHRS6(4,40),YHRS8(4,40),
     2YARS2(4,40),YARS4(4,40),YARS6(4,40),YARS8(4,40),
     3YHRS1(4,40),YHRS3(4,40),YHRS5(4,40),YHRS7(4,40),
     4YARS1(4,40),YARS3(4,40),YARS5(4,40),YARS7(4,40)
      DIMENSION
     1YHRSR1(3,40),YHRSR2(3,40),YHRSR3(3,40),YHRSR4(3,40),
     2YHRSR5(3,40),YHRSR6(3,40),YHRSR7(3,40),YHRSR8(3,40),
     3YARSR1(3,40),YARSR2(3,40),YARSR3(3,40),YARSR4(3,40),
     4YARSR5(3,40),YARSR6(3,40),YARSR7(3,40),YARSR8(3,40)
      READ(5,20)M,NCYCL
10    FORMAT(7I10)
      READ(5,20)YHAO,YAAO,YHCO,YACO,V,VDEAD,VB,
     1HAKP1,HCKP1,AAKP1,ACKP1,
     2HAKP2,HCKP2,AAKP2,ACKP2,
     3HAKP3,HCKP3,AAKP3,ACKP3
20    FORMAT(7F10.3)
      YHRS1(1, 1)=1.0
      YARS1(1,1)=1.0
      YHCOL1(1,1)=0.87
      YACOL1(1,1)=1.0
      YHRS1(2,1)=0.87
      YARS1(2,1)=1.0
      YHCOL1(2,1)=0.76
      YACOL1(2,1)=0.81
      YHRSL1(3,1)=0.76
      YARSL1(3,1)=0.81
      YHRSR1(3,1)=1.0
      YARSR1(3,1)=1.0
      YHCOL1(3,1)=0.87
      YACOL1(3,1)=1.0
      YHRS1(4,1)=0.87
      YARS1(4,1)=1.0
      J=1
15    DO 250 I=1,M
      A=(-1)**I
      IF(A)251,251,252
```

```
251  YHCOL3(I,J)=(VDEAD*YHRS1(I,J)+V*YHRS1(I,J)+VB*YHCOL1
    X(I,J)*HCKP2)/(VDEAD+V+VB*HCKP1)
     YACOL3(I,J)=(VDEAD*YARS1(I,J)+V*YARS1(I,J)+VB*YACOL1
    X(I,J)*ACKP2)/(VDEAD+V+VB*ACKP1)
     YHRS3(I,J)=YHCOL3(I,J)
     YARS3(I,J)=YACOL3(I,J)
     YHCOL3(I+1,J)=(YHCOL1(I,J)*V+VB*YHCOL1(I+1,J)*HAKP1+
    XVDEAD*YHRS1(I+1,J))/(V+VDEAD+VB*HAKP2)
     YACOL3(I+1,J)=(YACOL1(I,J)*V+VB*YACOL1(I+1,J)*AAKP1+
    XVDEAD*YARS1(I+1,J))/(V+VDEAD+VB*AAKP2)
     GO TO 250
252  YHRS3(I,J)=YHCOL3(I,J)
     YARS3(I,J)=YACOL3(I,J)
     YHCOL3(I+1,J)=((V+VDEAD)*YHRSR1(I+1,J)+VB*YHCOL1(I+1,
    XJ)*HCKP2)/(V+VDEAD+VB*HCKP3)
     YACOL3(I+1,J)=((V+VDEAD)*YARSR1(I+1,J)+VB*YACOL1(I+1,
    XJ)*ACKP2)/(V+VDEAD+VB*ACKP3)
     YHRSR3(I+1,J)=YHCOL3(I+1,J)
     YARSR3(I+1,J)=YACOL3(I+1,J)
     YHRSL3(I+1,J)=(YHRSL1(I+1,J)*VDEAD+V*YHCOL1(I,J))/
    X(V+VDEAD)
     YARSL3(I+1,J)=(YARSL1(I+1,J)*VDEAD+V*YACOL1(I,J))/
    X(V+VDEAD)
     YHRS3(I+2,J)=(YHRS1(I+2,J)*VDEAD+V*YHCOL1(I+1,J))/
    X(V+VDEAD)
     YARS3(I+2,J)=(YARS1(I+2,J)*VDEAD+V*YACOL1(I+1,J))/
    X(V+VDEAD)
250  CONTINUE
     DO 450 I=1,M
     A=(-1)**I
     IF(A)451,451,452
451  YHRS5(I,J)=(YHRS3(I,J)*VDEAD+V*YHCOL3(I,J))/(V+VDEAD)
     YARS5(I,J)=(YARS3(I,J)*VDEAD+V*YACOL3(I,J))/(V+VDEAD)
     YHCOL5(I,J)=(V*YHCOL3(I+1,J)+VB*YHCOL3(I,J)*HCKP1
    X+VDEAD*YHRS3(I+1,J))/(V+VDEAD+VB*HCKP2)
     YACOL5(I,J)=(V*YACOL3(I+1,J)+VB*YACOL3(I,J)*ACKP1
    X+VDEAD*YARS3(I+1,J))/(V+VDEAD+VB*ACKP2)
     YHCOL5(I+1,J)=(VB*YHCOL3(I+1,J)*HAKP2+
    X(V+VDEAD)*YHRSR3(I+2,J))/(V+VB*HAKP3+VDEAD)
     YACOL5(I+1,J)=(VB*YACOL3(I+1,J)*AAKP2+
    X(V+VDEAD)*YARSR3(I+2,J))/(V+VDEAD +VB*AAKP3)
     YHRS5(I+1,J)=YHCOL5(I,J)
     YARS5(I+1,J)=YACOL5(I,J)
     YHRSR5(I+2,J)=YHCOL5(I+1,J)
     YARSR5(I+2,J)=YACOL5(I+1,J)
     YHRSL5(I+2,J)=YHRSL3(I+2,J)
     YARSL5(I+2,J)=YARSL3(I+2,J)
     GO TO 450
452  YHCOL5(I+1,J)=((V+VDEAD)*YHRS3(I+2,J)
    X+VB*YHCOL3(I+1,J)*HCKP3)/(VDEAD+V+VB*HCKP2)
     YACOL5(I+1,J)=((V+VDEAD)*YARS3(I+2,J)
    X+VB*YACOL3(I+1,J)*ACKP3)/(VDEAD+V+VB*ACKP2)
```

```
      YHRS5(I+2,J)=YHCOL5(I+1,J)
      YARS5(I+2,J)=YACOL5(I+1,J)
450   CONTINUE
      DO 650 I=1,M
      A=(-1)**I
      IF(A)651,651,652
651   YHCOL7(I,J)=((V+VDEAD)*YHRS5(I,J)+
     XVB*YHCOL5(I,J)*HCKP2)/(V+VDEAD+VB*HCKP1)
      YACOL7(I,J)=((V+VDEAD)*YARS5(I,J)+
     XVB*YACOL5(I,J)*ACKP2)/(V+VDEAD+VB*ACKP1)
      YHCOL7(I+1,J)=(YHCOL5(I,J)*V+VB*YHCOL5(I+1,J)
     X*HAKP3+VDEAD*YHRS5(I+1,J))/(V+VDEAD+VB*HAKP2)
      YACOL7(I+1,J)=(YACOL5(I,J)*V+VB*YACOL5(I+1,J)
     X*AAKP3+VDEAD*YARS5(I+1,J))/(V+VDEAD+VB*AAKP2)
      YHRS7(I+1,J)=YHCOL7(I+1,J)
      YARS7(I+1,J)=YACOL7(I+1,J)
      YHRS7(I,J)=YHCOL7(I,J)
      YARS7(I,J)=YACOL7(I,J)
      GO TO 650
652   YHCOL7(I+1,J)=((V+VDEAD)*YHRSL5(I+1,J)
     X+VB*YHCOL5(I+1,J)*HCKP2)/(V+VDEAD+VB*HCKP1)
      YACOL7(I+1,J)=((V+VDEAD)*YARSL5(I+1,J)
     X+VB*YACOL5(I+1,J)*ACKP2)/(V+VDEAD+VB*ACKP1)
      YHRSL7(I+1,J)=YHCOL7(I+1,J)
      YARSL7(I+1,J)=YACOL7(I+1,J)
      YHRSR7(I+1,J)=(YHRSR5(I+1,J)*VDEAD+V*YHCOL5(I,J))/
     X(V+VDEAD)
      YARSR7(I+1,J)=(YARSR5(I+1,J)*VDEAD+V*YACOL5(I,J))/
     X(V+VDEAD)
      YHRS7(I+2,J)=(YHRS5(I+2,J)*VDEAD+V*YHCOL5(I+1,J))/
     X(V+VDEAD)
      YARS7(I+2,J)=(YARS5(I+2,J)*VDEAD+V*YACOL5(I+1,J))/
     X(V+VDEAD)
650   CONTINUE
      L=J
      J=J+1
      WRITE(6,3333)J
3333  FORMAT(2X,'***J=',I10)
      DO 850 I=1,M
      A=(-1)**I
      IF(A)851,851,852
851   YHRS1(I,J)=(YHRS7(I,L)*VDEAD+V*YHCOL7(I,L))/(V+VDEAD)
      YARS1(I,J)=(YARS7(I,L)*VDEAD+V*YACOL7(I,L))/(V+VDEAD)
      WRITE(6,1010)YHRS1(I,J),YARS1(I,J)
      YHCOL1(I,J)=(V*YHCOL7(I+1,L)+VB*YHCOL7(I,L)*HCKP1+
     XVDEAD*YHRS7(I+1,L))/(V+VB*HCKP2+VDEAD)
      YACOL1(I,J)=(YARS7(I+1,L)*VDEAD+V*YACOL7(I+1,L)
     X+VB*ACKP1*YACOL7(I,L))/(V+VB*ACKP2+VDEAD)
      YHCOL1(I+1,J)=(V*YHCOL7(I+2,L)+VB*YHCOL7(I+1,L)*HAKP2
     X+VDEAD*YHRSL7(I+2,L))/(V+VDEAD+VB*HAKP1)
      YACOL1(I+1,J)=(V*YACOL7(I+2,L)+VB*YACOL7(I+1,L)*AAKP2
     X+VDEAD*YARSL7(I+2,L))/(V+VDEAD+VB*AAKP1)
```

```
      YHRS1(I+1,J)=YHCOL1(I,J)
      YARS1(I+1,J)=YACOL1(I,J)
      YHRSL1(I+2,J)=YHCOL1(I+1,J)
      YARSL1(I+2,J)=YACOL1(I+1,J)
      YHRSR1(I+2,J)=YHRSR7(I+2,L)
      YARSR1(I+2,J)=YARSR7(I+2,L)
      II=I+2
      WRITE(6,2222)II
      WRITE(6,1009)YHRSL1(I+2,J),YARSL1(I+2,J),
     XYHRSR1(I+2,J),YARSR1(I+2,J)
1009 FORMAT(5X,'YHRSL1=',E20.5,'YARSL1=',E20.5,
     X'YHRSR1=',E20.5,'YARSR1=',E20.5)
      II=II-1
      WRITE(6,2222)II
2222 FORMAT(2X,'I=',I10)
      WRITE(6,8)YHRS1(I+1,J),YARS1(I+1,J)
8     FORMAT(5X,'YHRS1=',E25.5,'YARS1=',E25.5)
      GO TO 850
852   YHCOL1(I+1,J)=(VB*YHCOL7(I+1,L)*HCKP1+
     X(V+VDEAD)*YHRS7(I+2,L))/(V+VB*HCKP2+VDEAD)
      YACOL1(I+1,J)=(VB*YACOL7(I+1,L)*ACKP1+
     X(V+VDEAD)*YARS7(I+2,L))/(V+VB*ACKP2+VDEAD)
      YHRS1(I+2,J)=YHCOL1(I+1,J)
      YARS1(I+2,J)=YACOL1(I+1,J)
      II=I+2
      WRITE(6,2222)II
      WRITE(6,1010)YHRS1(I+2,J),YARS1(I+2,J)
1010 FORMAT(5X,'YHRS1=',E25.5,'YARS1=',E25.5)
850   CONTINUE
      IF(J-NCYCL)15,14,14
14    STOP
      END
```

Figure XLI

Flow Diagram of Three-Column Process
Case 1 (Three Column Case)

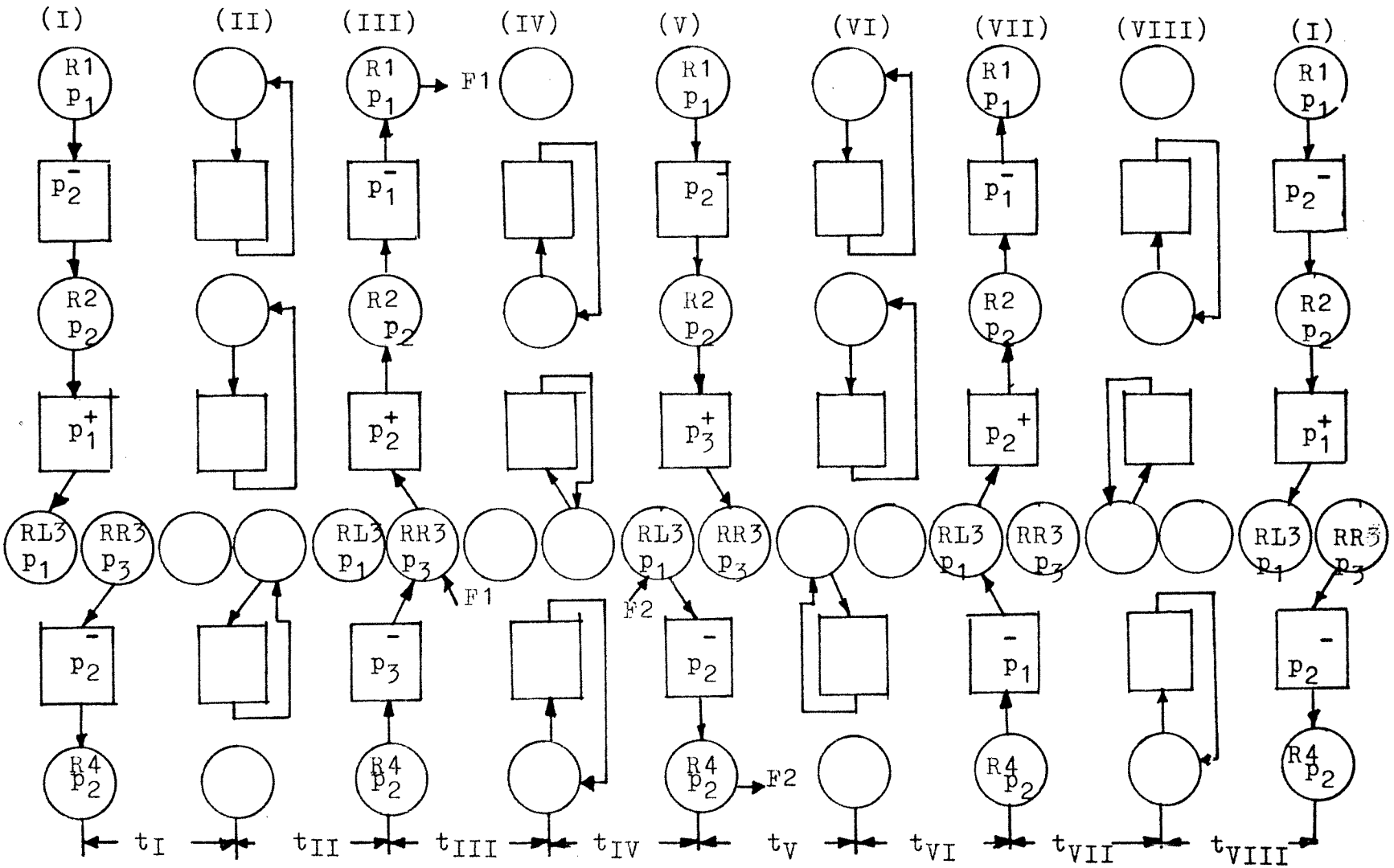

Computer Program (Three Column Process- Case 1) #X.

```
      DIMENSION
     1YHRSL1(3,40),YHRSL2(3,40),YHRSL3(3,40),YHRSL4(3,40),
     2YHRSL5(3,40),YHRSL6(3,40),YHRSL7(3,40),YHRSL8(3,40),
     3YARSL1(3,40),YARSL2(3,40),YARSL3(3,40),YARSL4(3,40),
     4YARSL5(3,40),YARSL6(3,40),YARSL7(3,40),YARSL8(3,40)
      DIMENSION
     1YHCOL1(3,40),YHCOL2(3,40),YHCOL3(3,40),YHCOL4(3,40),
     2YHCOL5(3,40),YHCOL6(3,40),YHCOL7(3,40),YHCOL8(3,40),
     3YACOL1(3,40),YACOL2(3,40),YACOL3(3,40),YACOL4(3,40),
     4YACOL5(3,40),YACOL6(3,40),YACOL7(3,40),YACOL8(3,40)
      DIMENSION
     1YHRS2(4,40),YHRS4(4,40),YHRS6(4,40),YHRS8(4,40),
     2YARS2(4,40),YARS4(4,40),YARS6(4,40),YARS8(4,40),
     3YHRS1(4,40),YHRS3(4,40),YHRS5(4,40),YHRS7(4,40),
     4YARS1(4,40),YARS3(4,40),YARS5(4,40),YARS7(4,40)
      DIMENSION
     1YHRSR1(3,40),YHRSR2(3,40),YHRSR3(3,40),YHRSR4(3,40),
     2YHRSR5(3,40),YHRSR6(3,40),YHRSR7(3,40),YHRSR8(3,40),
     3YARSR1(3,40),YARSR2(3,40),YARSR3(3,40),YARSR4(3,40),
     4YARSR5(3,40),YARSR6(3,40),YARSR7(3,40),YARSR8(3,40)
      READ(5,10)M,NCYCL
10    FORMAT(7I10)
      READ(5,20)YHAO,YAAO,YHCO,YACO,V,VDEAD,VB,
     1HAKP1,HCKP1,AAKP1,ACKP1,
     2HAKP2,HCKP2,AAKP2,ACKP2,
     3HAKP3,HCKP3,AAKP3,ACKP3
20    FORMAT(7F10.3)
      YHRS1(1,1)=1.0
      YARS1(1,1)=1.0
      YHCOL1(1,1)=0.87
      YACOL1(1,1)=1.0
      YHRS1(2,1)=0.87
      YARS1(2,1)=1.0
      YHCOL1(2,1)=0.76
      YACOL1(2,1)=0.81
      YHRSL1(3,1)=0.76
      YARSL1(3,1)=0.81
      YHRSR1(3,1)=1.0
      YARSR1(3,1)=1.0
      YHCOL1(3,1)=0.87
      YACOL1(3,1)=1.0
      YHRS1(4,1)=0.87
      YARS1(4,1)=1.0
      J=1
      F1=0.0
      F2=0.0
15    DO 250 I=1,M
      A=(-1)**I
      IF(A)251,251,252
251   YHCOL3(I,J)=(VDEAD*YHRS1(I,J)+V*YHRS1(I,J)+VB*YHCOL1
     X(I,J)*HCKP2)/(VDEAD+V+VB*HCKP1)
```

```
(Case #1 continued)
     YACOL3(I,J)=(VDEAD*YARS1(I,J)+V*YARS1(I,J)+VB*YACOL1
    X(I,J)*ACKP2)/(VDEAD+V+VB*ACKP1)
     YHRS3(I,J)=YHCOL3(I,J)
     YARS3(I,J)=YACOL3(I,J)
     YHCOL3(I+1,J)=(YHCOL1(I,J)*V+VB*YHCOL1(I+1,J)*HAKP1+
    XVDEAD*YHRS1(I+1,J))/(V+VDEAD+VB*HAKP2)
     YACOL3(I+1,J)=(YACOL1(I,J)*V+VB*YACOL1(I+1,J)*AAKP1+
    XVDEAD*YARS1(I+1,J))/(V+VDEAD+VB*AAKP2)
     GO TO 250
252  YHRS3(I,J)=YHCOL3(I,J)
     YARS3(I,J)=YACOL3(I,J)
     YHCOL3(I+1,J)=((V+VDEAD)*YHRSR1(I+1,J)+VB*YHCOL1(I+1,J
    X)*HCKP2)/(V+VDEAD+VB*HCKP3)
     YACOL3(I+1,J)=((V+VDEAD)*YARSR1(I+1,J)+VB*YACOL1(I+1,J
    X)*ACKP2)/(V+VDEAD+VB*ACKP3)
     YHRSR3(I+1,J)=YHCOL3(I+1,J)
     YARSR3(I+1,J)=YACOL3(I+1,J)
     YHRSL3(I+1,J)=(YHRSL1(I+1,J)*VDEAD+V*YHCOL1(I,J))/
    X(V+VDEAD)
     YARSL3(I+1,J)=(YARSL1(I+1,J)*VDEAD+V*YACOL1(I,J))/
    X(V+VDEAD)
     YHRS3(I+2,J)=(YHRS1(I+2,J)*VDEAD+V*YHCOL1(I+1,J))/
    X(V+VDEAD)
     YARS3(I+2,J)=(YARS1(I+2,J)*VDEAD+V*YACOL1(I+1,J))/
    X(V+VDEAD)
250  CONTINUE
     DO 450 I=1,M
     A=(-1)**I
     IF(A)451,451,452
451  YHRSR4(I+2,J)=(F1*1.0+VDEAD*YHRSR3(I+2,J)+V*YHCOL3
    X(I+2,J))/(F1+V+VDEAD)
     YARSR4(I+2,J)=(F1*1.0+VDEAD*YARSR3(I+2,J)+V*YACOL3
    X(I+2,J))/(F1+V+VDEAD)
     YHRS5(I,J)=(YHRS3(I,J)*VDEAD+V*YHCOL3(I,J)+F1*YHRSR4
    X(I+2,J))/(F1+V+VDEAD)
     YARS5(I,J)=(YARS3(I,J)*VDEAD+V*YACOL3(I,J)+F1*YARSR4
    X(I+2,J))/(F1+V+VDEAD)
     YHCOL5(I,J)=(V*YHCOL3(I+1,J)+VB*YHCOL3(I,J)*HCKP1
    X+VDEAD*YHRS3(I+1,J))/(V+VDEAD+VB*HCKP2)
     YACOL5(I,J)=(V*YACOL3(I+1,J)+VB*YACOL3(I,J)*ACKP1
    X+VDEAD*YARS3(I+1,J))/(V+VDEAD+VB*ACKP2)
     YHCOL5(I+1,J)=(VB*YHCOL3(I+1,J)*HAKP2+
    X(V+VDEAD)*YHRSR4(I+2,J))/(V+VB*HAKP3+VDEAD)
     YACOL5(I+1,J)=(VB*YACOL3(I+1,J)*AAKP2+
    X(V+VDEAD)*YARSR4(I+2,J))/(V+VDEAD+VB*AAKP3)
     YHRS5(I+1,J)=YHCOL5(I,J)
     YARS5(I+1,J)=YACOL5(I,J)
     YHRSR5(I+2,J)=YHCOL5(I+1,J)
     YARSR5(I+2,J)=YACOL5(I+1,J)
     YHRSL5(I+2,J)=YHRSL3(I+2,J)
     YARSL5(I+2,J)=YARSL3(I+2,J)
     GO TO 450
452  YHCOL5(I+1,J)=((V+VDEAD)*YHRS3(I+2,J)
```

```
(Case #1 continued)
     X+VB*YHCOL3(I+1,J)*HCKP3)/(VDEAD+V+VB*HCKP2)
      YACOL5(I+1,J)=((V+VDEAD)*YARS3(I+2,J)
     X+VB*YACOL3(I+1,J)*ACKP3)/(VDEAD+V+VB*ACKP2)
      YHRS5(I+2,J)=YHCOL5(I+1,J)
      YARS5(I+2,J)=YACOL5(I+1,J)
450  CONTINUE
      DO 650 I=1,M
      A=(-1)**I
      IF(A)651,651,652
651   YHCOL7(I,J)=((V+VDEAD)*YHRS5(I,J)+
     XVB*YHCOL5(I,J)*HCKP2)/(V+VDEAD+VB*HCKP1)
      YACOL7(I,J)=((V+VDEAD)*YARS5(I,J)+
     XVB*YACOL5(I,J)*ACKP2)/(V+VDEAD+VB*ACKP1)
      YHCOL7(I+1,J)=(YHCOL5(I,J)*V+VB*YHCOL5(I+1,J)
     X*HAKP3+VDEAD*YHRS5(I+1,J))/(V+VDEAD+VB*HAKP2)
      YACOL7(I+1,J)=(YACOL5(I,J)*V+VB*YACOL5(I+1,J)
     X*AAKP3+VDEAD*YARS5(I+1,J))/(V+VDEAD+VB*AAKP2)
      YHRS7(I+1,J)=YHCOL7(I+1,J)
      YARS7(I+1,J)=YACOL7(I+1,J)
      YHRS7(I,J)=YHCOL7(I,J)
      YARS7(I,J)=YACOL7(I,J)
      GO TO 650
652   YHRSL6(I+1,J)=(F2*1.0+(V+VDEAD)*YHRSL5(I+1,J))/
     X(F2+V+VDEAD)
      YARSL6(I+1,J)=(F2*1.0+(V+VDEAD)*YARSL5(I+1,J))/
     X(F2+V+VDEAD)
      YHCOL7(I+1,J)=((V+VDEAD)*YHRSL6(I+1,J)
     X+VB*YHCOL5(I+1,J)*HCKP2)/(V+VDEAD+VB*HCKP1)
      YACOL7(I+1,J)=((V+VDEAD)*YARSL6(I+1,J)
     X+VB*YACOL5(I+1,J)*ACKP2)/(V+VDEAD+VB*ACKP1)
      YHRSL7(I+1,J)=YHCOL7(I+1,J)
      YARSL7(I+1,J)=YACOL7(I+1,J)
      YHRSR7(I+1,J)=(YHRSR5(I+1,J)*VDEAD+V*YHCOL5(I,J))/
     X(V+VDEAD)
      YARSR7(I+1,J)=(YARSR5(I+1,J)*VDEAD+V*YACOL5(I,J))/
     X(V+VDEAD)
      YHRS7(I+2,J)=(YHRS5(I+2,J)*VDEAD+V*YHCOL5(I+1,J)+
     XF2*YHRSL6(I+1,J))/(V+VDEAD+F2)
      YARS7(I+2,J)=(YARS5(I+2,J)*VDEAD+V*YACOL5(I+1,J)+
     XF2*YARSL6(I+1,J))/(V+VDEAD+F2)
650   CONTINUE
      L=J
      J=J+1
      WRITE(6,3333)J
3333FORMAT(2X,'***J=',I10)
      DO 850 I=1,M
      A=(-1)**I
      IF(A)851,851,852
851   YHRS1(I,J)=(YHRS7(I,L)*VDEAD+V*YHCOL7(I,L))/(V+VDEAD)
      YARS1(I,J)=(YARS7(I,L)*VDEAD+V*YACOL7(I,L))/(V+VDEAD)
      WRITE(6,1010)YHRS1(I,J),YARS1(I,J)
      YHCOL1(I,J)=(V*YHCOL7(I+1,L)+VB*YHCOL7(I,L)*HCKP1+
     XVDEAD*YHRS7(I+1,L))/(V+VB*HCKP2+VDEAD)
```

```
(Case#1 continued)
     YACOL1(I,J)=(YARS7(I+1,L)*VDEAD+V*YACOL7(I+1,L)
    X+VB*ACKP1*YACOL7(I,L))/(V+VB*ACKP2+VDEAD)
     YHCOL1(I+1,J)=(V*YHCOL7(I+2,L)+VB*YHCOL7(I+1,L)*HAKP2
    X+VDEAD*YHRSL7(I+2,L))/(V+VDEAD+VB*HAKP1)
     YACOL1(I+1,J)=(V*YACOL7(I+2,L)+VB*YACOL7(I+1,L)*AAKP2
    X+VDEAD*YARSL7(I+2,L))/(V+VDEAD+VB*AAKP1)
     YHRS1(I+1,J)=YHCOL1(I,J)
     YARS1(I+1,J)=YACOL1(I,J)
     YHRSL1(I+2,J)=YHCOL1(I+1,J)
     YARSL1(I+2,J)=YACOL1(I+1,J)
     YHRSR1(I+2,J)=YHRSR7(I+2,L)
     YARSR1(I+2,J)=YARSR7(I+2,L)
     II=I+2
     WRITE(6,2222)II
     WRITE(6,1009)YHRSL1(I+2,J),YARSL1(I+2,J),
    XYHRSR1(I+2,J),YARSR1(I+2,J)
1009FORMAT(5X,'YHRSL1=',E20.5,'YARSL1=',E20.5,
    X'YHRSR1=',E20.5,'YARSR1=',E20.5)
     II=II-1
     WRITE(6,2222)II
2222FORMAT(2X,'I=',I10)
     WRITE(6,8)YHRS1(I+1,J),YARS1(I+1,J)
8    FORMAT(5X,'YHRS1=',E25.5,'YARS1=',E25.5)
     GO TO 850
852  YHCOL1(I+1,J)=(VB*YHCOL7(I+1,L)*HCKP1+
    X(V+VDEAD)*YHRS7(I+2,L))/(V+VB*HCKP2+VDEAD)
     YACOL1(I+1,J)=(VB*YACOL7(I+1,L)*ACKP1+
    X(V+VDEAD)*YARS7(I+2,L))/(V+VB*ACKP2+VDEAD)
     YHRS1(I+2,J)=YHCOL1(I+1,J)
     YARS1(I+2,J)=YACOL1(I+1,J)
     II=I+2
     WRITE(6,2222)II
     WRITE(6,1010)YHRS1(I+2,J),YARS1(I+2,J)
1010FORMAT(5X,'YHRS1=',E25.5,'YARS1=',E25.5)
850  CONTINUE
     IF(J-NCYCL)15,14,14
14   F1=F1+3.0
     F2=F2+3.0
     J=1
     IF(F1.EQ.15)GO TO 91
     GO TO 15
91   STOP
     END
```

Figure XLII

Flow Diagram of Three-Column Process
Case 2 (Three Column Case)

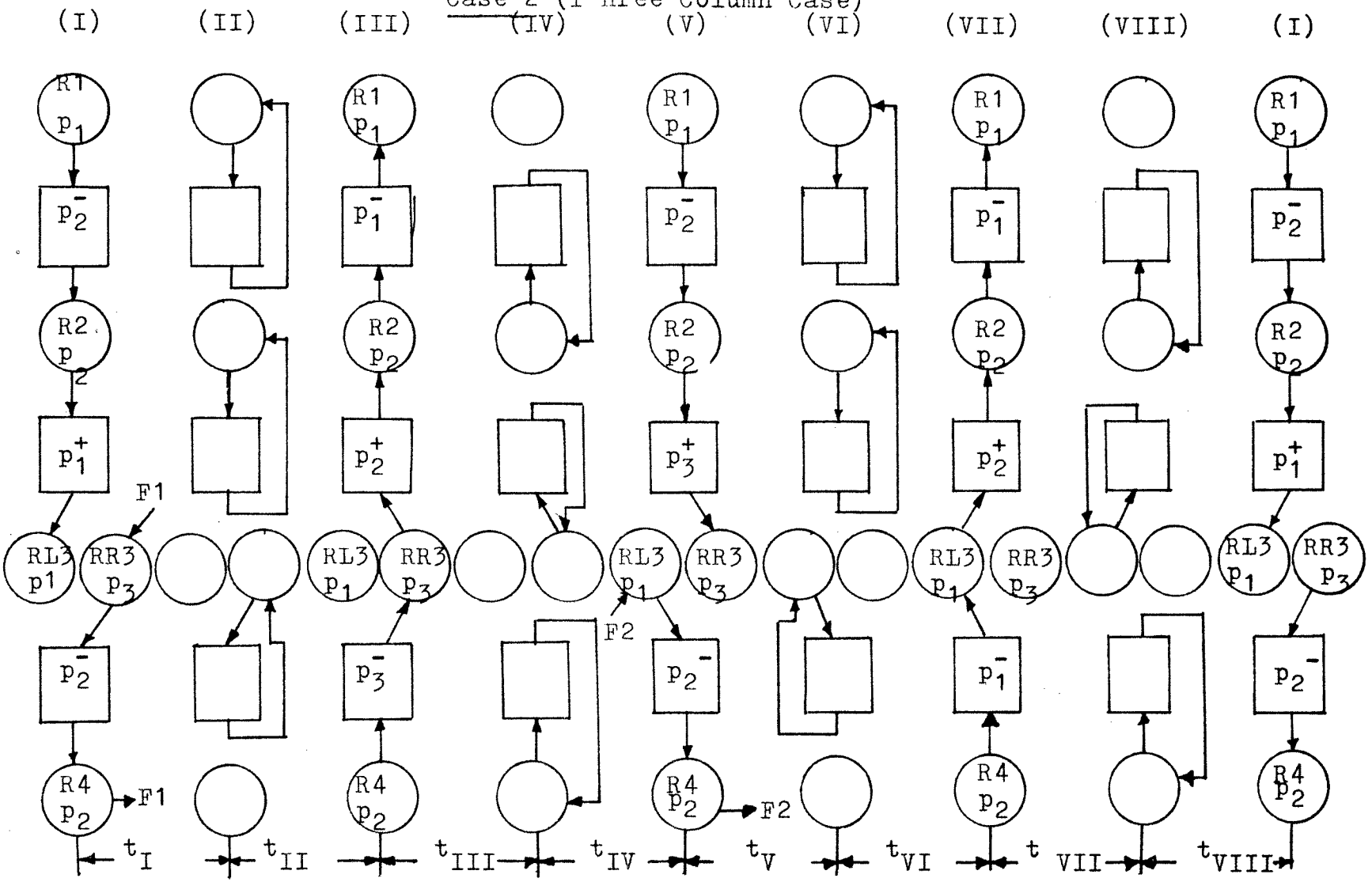

Computer Program (Three Column Process- Case 2) #XI.

```
      DIMENSION
     1YHRSL1(3,40),YHRSL2(3,40),YHRSL3(3,40),YHRSL4(3,40),
     2YHRSL5(3,40),YHRSL6(3,40),YHRSL7(3,40),YHRSL8(3,40),
     3YARSL1(3,40),YARSL2(3,40),YARSL3(3,40),YARSL4(3,40),
     4YARSL5(3,40),YARSL6(3,40),YARSL7(3,40),YARSL8(3,40)
      DIMENSION
     1YHCOL1(3,40),YHCOL2(3,40),YHCOL3(3,40),YHCOL4(3,40),
     2YHCOL5(3,40),YHCOL6(3,40),YHCOL7(3,40),YHCOL8(3,40),
     3YACOL1(3,40),YACOL2(3,40),YACOL3(3,40),YACOL4(3,40),
     4YACOL5(3,40),YACOL6(3,40),YACOL7(3,40),YACOL8(3,40)
      DIMENSION
     1YHRS2(4,40),YHRS4(4,40),YHRS6(4,40),YHRS8(4,40),
     2YARS2(4,40),YARS4(4,40),YARS6(4,40),YARS8(4,40),
     3YHRS1(4,40),YHRS3(4,40),YHRS5(4,40),YHRS7(4,40),
     4YARS1(4,40),YARS3(4,40),YARS5(4,40),YARS7(4,40)
      DIMENSION
     1YHRSR1(3,40),YHRSR2(3,40),YHRSR3(3,40),YHRSR4(3,40),
     2YHRSR5(3,40),YHRSR6(3,40),YHRSR7(3,40),YHRSR8(3,40),
     3YARSR1(3,40),YARSR2(3,40),YARSR3(3,40),YARSR4(3,40),
     4YARSR5(3,40),YARSR6(3,40),YARSR7(3,40),YARSR8(3,40)
      READ(5,10)M,NCYCL
10    FORMAT(7I10)
      READ(5,20)YHA0,YAA0,YHC0,YAC0,V,VDEAD,VB,
     1HAKP1,HCKP1,AAKP1,ACKP1,
     2HAKP2,HCKP2,AAKP2,ACKP2,
     3HAKP3,HCKP3,AAKP3,ACKP3,
20    FORMAT(7F10.3)
      YHRS1(1,1)=1.0
      YARS1(1,1)=1.0
      YHCOL1(1,1)=0.87
      YACOL1(1,1)=1.0
      YHRS1(2,1)=0.87
      YARS1(2,1)=1.0
      YHCOL1(2,1)=0.76
      YACOL1(2,1)=0.81
      YHRSL1(3,1)=0.76
      YARSL1(3,1)=0.81
      YHRSR1(3,1)=1.0
      YARSR1(3,1)=1.0
      YHCOL1(3,1)=0.87
      YACOL1(3,1)=1.0
      YHRS1(4,1)=0.87
      YARS1(4,1)=1.0
      J=1
      F1=0.0
      F2=0.0
15    DO 250 I=1,M
      A=(-1)**I
      IF(A)251,251,252
251   YHCOL3(I,J)=(VDEAD*YHRS1(I,J)+V*YHRS1(I,J)+VB*YHCOL1
```

```
(Case 2 continued)
   X(I,J)*HCKP2)/(VDEAD+V+VB*HCKP1)
    YACOL3(I,J)=(VDEAD*YARS1(I,J)+V*YARS1(I,J)+VB*YACOL1
   X(I,J)*ACKP2)/(VDEAD+V+VB*ACKP1)
    YHRS3(I,J)=YHCOL3(I,J)
    YARS3(I,J)=YACOL3(I,J)
    YHCOL3(I+1,J)=(YHCOL1(I,J)*V+VB*YHCOL1(I+1,J)*HAKP1+
   XVDEAD*YHRS1(I+1,J))/(V+VDEAD+VB*HAKP2)
    YACOL3(I+1,J)=(YACOL1(I,J)*V+VB*YACOL1(I+1,J)*AAKP1+
   XVDEAD*YARS1(I+1,J))/(V+VDEAD+VB*AAKP2)
    GO TO 250
252 YHRSR2(I+1,J)=(F1*1.0+(V+VDEAD)*YHRSR1(I+1,J))/(V+VDEAD
   X+F1)
    YARSR2(I+1,J)=(F1*1.0+(V+VDEAD)*YARSR1(I+1,J))/(V+VDEAD
   X+F1)
    YHRS3(I,J)=YHCOL3(I,J)
    YARS3(I,J)=YACOL3(I,J)
    YHCOL3(I+1,J)=((V+VDEAD)*YHRSR2(I+1,J)+VB*YHCOL1(I+1,J)
   X*HCKP2)/(V+VDEAD+VB*HCKP3)
    YACOL3(I+1,J)=((V+VDEAD)*YARSR2(I+1,J)+VB*YACOL1(I+1,J)
   X*ACKP2)/(V+VDEAD+VB*ACKP3)
    YHRSR3(I+1,J)=YHCOL3(I+1,J)
    YARSR3(I+1,J)=YACOL3(I+1,J)
    YHRSL3(I+1,J)=(YHRSL1(I+1,J)*VDEAD+V*YHCOL1(I,J))/(V+VDEAD)
    YARSL3(I+1,J)=(YARSL1(I+1,J)*VDEAD+V*YACOL1(I,J))/(V+VDEAD)
    YHRS3(I+2,J)=(YHRS1(I+2,J)*VDEAD+V*YHCOL1(I+1,J)+F1*
   XYHRSR2(I+1,J))/(V+VDEAD+F1)
    YARS3(I+2,J)=(YARS1(I+2,J)*VDEAD+V*YACOL1(I+1,J)+F1*
   XYARSR2(I+1,J))/(V+VDEAD+F1)
250 CONTINUE
    DO 450 I=1,M
    A=(-1)**I
    IF(A)451,451,452
451 YHRS5(I,J)=(YHRS3(I,J)*VDEAD+V*YHCOL3(I,J))/(V+VDEAD)
    YARS5(I,J)=(YARS3(I,J)*VDEAD+V*YACOL3(I,J))/(V+VDEAD)
    YHCOL5(I,J)=(V*YHCOL3(I+1,J)+VB*YHCOL3(I,J)*HCKP1
   X+VDEAD*YHRS3(I+1,J))/(V+VDEAD+VB*HCKP2)
    YACOL5(I,J)=(V*YACOL3(I+1,J)+VB*YACOL3(I,J)*ACKP1
   X+VDEAD*YARS3(I+1,J))/(V+VDEAD+VB*ACKP2)
    YHCOL5(I+1,J)=(VB*YHCOL3(I+1,J)*HAKP2+
   XVDEAD*YHRSR3(I+2,J)+V*YHCOL3(I+2,J))/(V+VB*HAKP3+VDEAD)
    YACOL5(I+1,J)=(VB*YACOL3(I+1,J)*AAKP2+
   XVDEAD*YARSR3(I+2,J)+V*YACOL3(I+2,J))/(V+VB*AAKP3+VDEAD)
    YHRS5(I+1,J)=YHCOL5(I,J)
    YARS5(I+1,J)=YACOL5(I,J)
    YHRSR5(I+2,J)=YHCOL5(I+1,J)
    YARSR5(I+2,J)=YACOL5(I+1,J)
    YHRSL5(I+2,J)=YHRSL3(I+2,J)
    YARSL5(I+2,J)=YARSL3(I+2,J)
    GO TO 450
452 YHCOL5(I+1,J)=((V+VDEAD)*YHRS3(I+2,J)
   X+VB*YHCOL3(I+1,J)*HCKP3)/(VDEAD+V+VB*HCKP2)
```

```
(Case 2 continued)
     YACOL5(I+1,J)=((V+VDEAD)*YARS3(I+2,J)
    X+VB*YACOL3(I+1,J)*ACKP3)/(VDEAD+V+VB*ACKP2)
     YHRS5(I+2,J)=YHCOL5(I+1,J)
     YARS5(I+2,J)=YACOL5(I+1,J)
450  CONTINUE
     DO 650 I=1,M
     A=(-1)**I
     IF(A)651,651,652
651  YHCOL7(I,J)=((V+VDEAD)*YHRS5(I,J)+
    XVB*YHCOL5(I,J)*HCKP2)/(V+VDEAD+VB*HCKP1)
     YACOL7(I,J)=((V+VDEAD)*YARS5(I,J)+
    XVB*YACOL5(I,J)*ACKP2)/(V+VDEAD+VB*ACKP1)
     YHCOL7(I+1,J)=(YHCOL5(I,J)*V+VB*YHCOL5(I+1,J)
    X*HAKP3+VDEAD*YHRS5(I+1,J))/(V+VDEAD+VB*HAKP2)
     YACOL7(I+1,J)=(YACOL5(I,J)*V+VB*YACOL5(I+1,J)
    X*AAKP3+VDEAD*YARS5(I+1,J))/(V+VDEAD+VB*AAKP2)
     YHRS7(I+1,J)=YHCOL7(I+1,J)
     YARS7(I+1,J)=YACOL7(I+1,J)
     YHRS7(I,J)=YHCOL7(I,J)
     YARS7(I,J)=YACOL7(I,J)
     GO TO 650
652  YHRSL6(I+1,J)=(F2*1.0+(V+VDEAD)*YHRSL5(I+1,J))/
    X(F2+V+VDEAD)
     YARSL6(I+1,J)=(F2*1.0+(V+VDEAD)*YARSL5(I+1,J))/
    X(F2+V+VDEAD)
     YHCOL7(I+1,J)=((V+VDEAD)*YHRSL6(I+1,J)
    X+VB*YHCOL5(I+1,J)*HCKP2)/(V+VDEAD+VB*HCKP1)
     YACOL7(I+1,J)=((V+VDEAD)*YARSL6(I+1,J)
    X+VB*YACOL5(I+1,J)*ACKP2)/(V+VDEAD+VB*ACKP1)
     YHRSL7(I+1,J)=YHCOL7(I+1,J)
     YARSL7(I+1,J)=YACOL7(I+1,J)
     YHRSR7(I+1,J)=(YHRSR5(I+1,J)*VDEAD+V*YHCOL5(I,J))/
    X(V+VDEAD)
     YARSR7(I+1,J)=(YARSR5(I+1,J)*VDEAD+V*YACOL5(I,J))/
    X(V+VDEAD)
     YHRS7(I+2,J)=(YHRS5(I+2,J)*VDEAD+V*YHCOL5(I+1,J)+
    XF2*YHRSL6(I+1,J))/(V+VDEAD+F2)
     YARS7(I+2,J)=(YARS5(I+2,J)*VDEAD+V*YACOL5(I+1,J)+
    XF2*YARSL6(I+1,J))/(V+VDEAD+F2)
650  CONTINUE
     L=J
     J=J+1
     WRITE(6,3333)J
3333FORMAT(2X,'***J=',I10)
     DO 850 I=1,M
     A=(-1)**I
     IF(A)851,851,852
851  YHRS1(I,J)=(YHRS7(I,L)*VDEAD+V*YHCOL7(I,L))/(V+VDEAD)
     YARS1(I,J)=(YARS7(I,L)*VDEAD+V*YACOL7(I,L))/(V+VDEAD)
     WRITE(6,1010)YHRS1(I,J),YARS1(I,J)
     YHCOL1(I,J)=(V*YHCOL7(I+1,L)+VB*YHCOL7(I,L)*HCKP1+
    XVDEAD*YHRS7(I+1,L))/(V+VB*HCKP2+VDEAD)
```

```
(Case 2 continued)
     YACOL1(I,J)=(YARS7(I+1,L)*VDEAD+V*YACOL7(I+1,L)
    X+VB*ACKP1*YACOL7(I,L))/(V+VB*ACKP2+VDEAD)
     YHCOL1(I+1,J)=(V*YHCOL7(I+2,L)+VB*YHCOL7(I+1,L)*HAKP2
    X+VDEAD*YHRSL7(I+2,L))/(V+VDEAD+VB*HAKP1)
     YACOL1(I+1,J)=(V*YACOL7(I+2,L)+VB*YACOL7(I+1,L)*AAKP2
    X+VDEAD*YARSL7(I+2,L))/(V+VDEAD+VB*AAKP1)
     YHRS1(I+1,J)=YHCOL1(I,J)
     YARS1(I+1,J)=YACOL1(I,J)
     YHRSL1(I+2,J)=YHCOL1(I+1,J)
     YARSL1(I+2,J)=YACOL1(I+1,J)
     YHRSR1(I+2,J)=YHRSR7(I+2,L)
     YARSR1(I+2,J)=YARSR7(I+2,L)
     II=I+2
     WRITE(6,2222)II
     WRITE(6,1009)YHRSL1(I+2,J),YARSL1(I+2,J),
    XYHRSR1(I+2,J),YARSR1(I+2,J)
1009FORMAT(5X,'YHRSL1=',E20.5,'YARSL1=',E20.5,'YHRSR1=',
    XE20.5,'YARSR1=',E20.5)
     II=II-1
     WRITE(6,2222)II
2222FORMAT(2X,'I=',I10)
     WRITE(6,8)YHRS1(I+1,J),YARS1(I+1,J)
8    FORMAT(5X,'YHRS1=',E25.5,'YARS1=',E25.5)
     GO TO 850
852  YHCOL1(I+1,J)=(VB*YHCOL7(I+1,L)*HCKP1+
    X(V+VDEAD)*YHRS7(I+2,L))/(V+VB*HCKP2+VDEAD)
     YACOL1(I+1,J)=(VB*YACOL7(I+1,L)*ACKP1+
    X(V+VDEAD)*YARS7(I+2,L))/(V+VB*ACKP2+VDEAD)
     YHRS1(I+2,J)=YHCOL1(I+1,J)
     YARS1(I+2,J)=YACOL1(I+1,J)
     II=I+2
     WRITE(6,2222)II
     WRITE(6,1010)YHRS1(I+2,J),YARS1(I+2,J)
1010FORMAT(5X,'YHRS1=',E25.5,'YARS1=',E25.5)
850  CONTINUE
     IF(J-NCYCL)15,14,14
14   F1= F1+3.0
     F2=F2+3.0
     J=1
     IF(F1.EQ.15)GO TO 91
     GO TO 15
91   STOP
     END
```

Figure XLIII

Flow Diagram of Three-Column Process

Case #3 (Three Column Case)

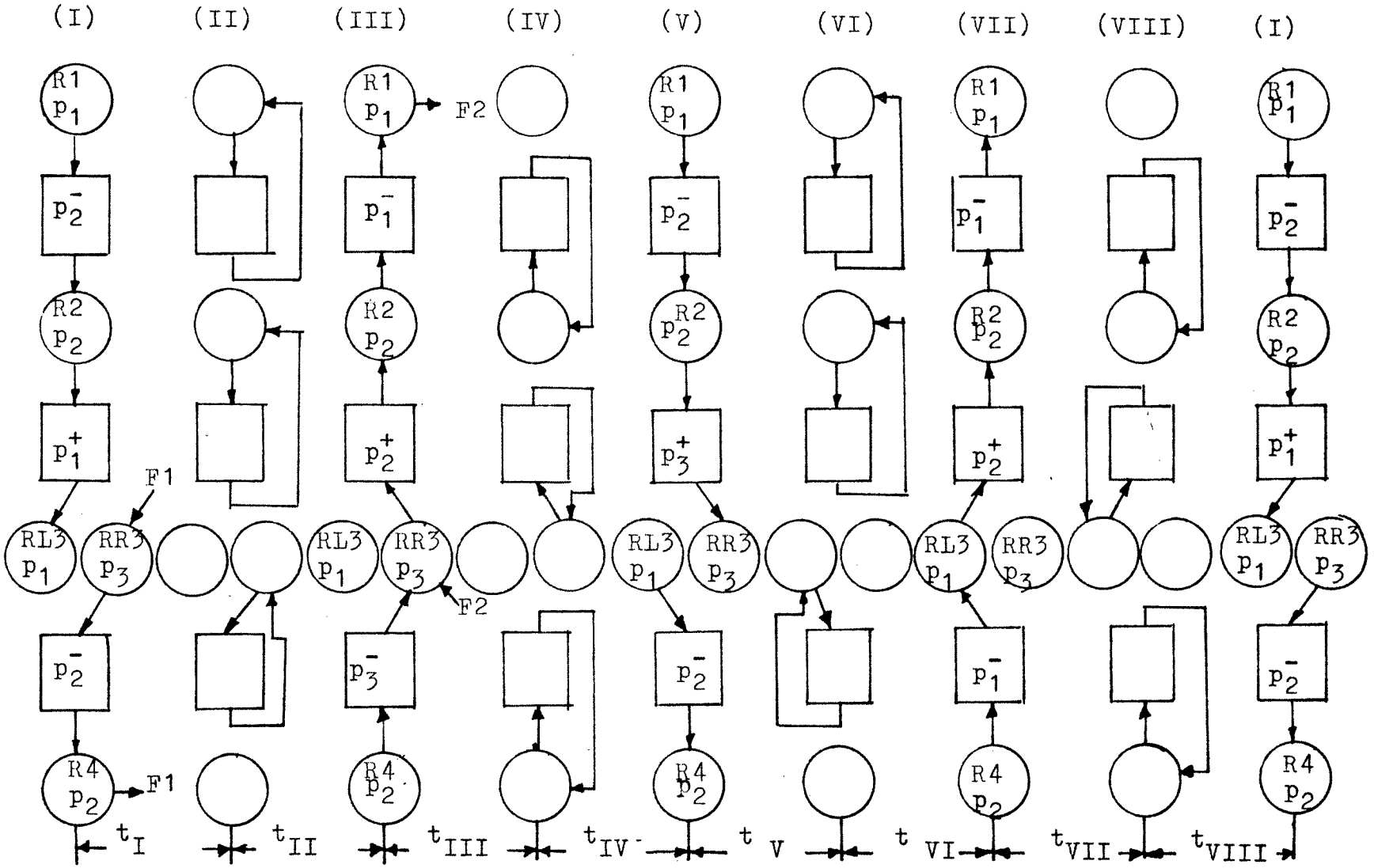

COMPUTER PROGRAM(Three Column Process- Case 3) #XII.

```
      DIMENSION
     1YHRSL1(3,40),YHRSL2(3,40),YHRSL3(3,40),YHRSL4(3,40),
     2YHRSL5(3,40),YHRSL6(3,40),YHRSL7(3,40),YHRSL8(3,40),
     3YARSL1(3,40),YARSL2(3,40),YARSL3(3,40),YARSL4(3,40),
     4YARSL5(3,40),YARSL6(3,40),YARSL7(3,40),YARSL8(3,40)
      DIMENSION
     1YHCOL1(3,40),YHCOL2(3,40),YHCOL3(3,40),YHCOL4(3,40),
     2YHCOL5(3,40),YHCOL6(3,40),YHCOL7(3,40),YHCOL8(3,40),
     3YACOL1(3,40),YACOL2(3,40),YACOL3(3,40),YACOL4(3,40),
     4YACOL5(3,40),YACOL6(3,40),YACOL7(3,40),YACOL8(3,40)
      DIMENSION
     1YHRS2(4,40),YHRS4(4,40),YHRS6(4,40),YHRS8(4,40),
     2YARS2(4,40),YARS4(4,40),YARS6(4,40),YARS8(4,40),
     3YHRS1(4,40),YHRS3(4,40),YHRS5(4,40),YHRS7(4,40),
     4YARS1(4,40),YARS3(4,40),YARS5(4,40),YARS7(4,40)
      DIMENSION
     1YHRSR1(3,40),YHRSR2(3,40),YHRSR3(3,40),YHRSR4(3,40),
     2YHRSR5(3,40),YHRSR6(3,40),YHRSR7(3,40),YHRSR8(3,40),
     3YARSR1(3,40),YARSR2(3,40),YARSR3(3,40),YARSR4(3,40),
     4YARSR5(3,40),YARSR6(3,40),YARSR7(3,40),YARSR8(3,40)
      READ(5,10)M,NCYCL
10    FORMAT(7I10)
      READ(5,20)YHAO,YAAO,YHCO,YACO,V,VDEAD,VB,
     1HAKP1,HCKP1,AAKP1,ACKP1,
     2HAKP2,HCKP2,AAKP2,ACKP2,
     3HAKP3,HCKP3,AAKP3,ACKP3
20    FORMAT(7F10.3)
      YHRS1(1,1)=1.0
      YARS1(1,1)=1.0
      YHCOL1(1,1)=0.87
      YACOL1(1,1)=1.0
      YHRS1(2,1)=0.87
      YARS1(2,1)=1.0
      YHCOL1(2,1)=0.76
      YACOL1(2,1)=0.81
      YHRSL1(3,1)=0.76
      YARSL1(3,1)=0.81
      YHRSR1(3,1)=1.0
      YARSR1(3,1)=1.0
      YHCOL1(3,1)=0.87
      YACOL1(3,1)=1.0
      YHRS1(4,1)=0.87
      YARS1(4,1)=1.0
      J=1
      F1=0.0
      F2=0.0
15    DO250 I=1,M
      A=(-1)**I
      IF(A)251,251,252
251   YHCOL3(I,J)=(VDEAD*YHRS1(I,J)+V*YHRS1(I,J)+VB*YHCOL1
     X(I,J)*HCKP2)/(VDEAD+V+VB*HCKP1)
      YACOL3(I,J)=(VDEAD*YARS1(I,J)+V*YARS1(I,J)+VB*YACOL1
```

```
(Case 3 continued)
   X(I,J)*ACKP2)/(VDEAD+V+VB*ACKP1)
    YHRS3(I,J)=YHCOL3(I,J)
    YARS3(I,J)=YACOL3(I,J)
    YHCOL3(I+1,J)=(YHCOL1(I,J)*V+VB*YHCOL1(I+1,J)*HAKP1+
   XVDEAD*YHRS1(I+1,J))/(V+VDEAD+VB*HAKP2)
    YACOL3(I+1,J)=(YACOL1(I,J)*V+VB*YACOL1(I+1,J)*AAKP1+
   XVDEAD*YARS1(I+1,J))/(V+VDEAD+VB*AAKP2)
    GO TO 250
252 YHRSR2(I+1,J)=(F1*1.0+(V+VDEAD)*YHRSR1(I+1,J))/
   X(V+VDEAD+F1)
    YARSR2(I+1,J)=(F1*1.0+(V+VDEAD)*YARSR1(I+1,J))/
   X(V+VDEAD+F1)
    YHRS3(I,J)=YHCOL3(I,J)
    YARS3(I,J)=YACOL3(I,J)
    YHCOL3(I+1,J)=((V+VDEAD)*YHRSR2(I+1,J)+VB*YHCOL1(I+1,
   XJ)*HCKP2)/(V+VDEAD+VB*HCKP3)
    YACOL3(I+1,J)=((V+VDEAD)*YARSR2(I+1,J)+VB*YACOL1(I+1,
   XJ)*ACKP2)/(V+VDEAD+VB*ACKP3)
    YHRSR3(I+1,J)=YHCOL3(I+1,J)
    YARSR3(I+1,J)=YACOL3(I+1,J)
    YHRSL3(I+1,J)=(YHRSL1(I+1,J)*VDEAD+V*YHCOL1(I,J))/
   X(V+VDEAD)
    YARSL3(I+1,J)=(YARSL1(I+1,J)*VDEAD+V*YACOL1(I,J))/
   X(V+VDEAD)
    YHRS3(I+2,J)=(YHRS1(I+2,J)*VDEAD+V*YHCOL1(I+1,J)+F1*
   XYHRSR2(I+1,J))/(V+VDEAD+F1)
    YARS3(I+2,J)=(YARS1(I+2,J)*VDEAD+V*YACOL1(I+1,J)+F1*
   XYARSR2(I+1,J))/(V+VDEAD+F1)
250 CONTINUE
    DO 450 I=1,M
    A=(-1)**I
    IF(A)451,451,452
451 YHRSR4(I+2,J)=(F2*1.0+VDEAD*YHRSR3(I+2,J)+V*YHCOL3(I+2,
   XJ))/(F2+V+VDEAD)
    YARSR4(I+2,J)=(F2*1.0+VDEAD*YARSR3(I+2,J)+V*YACOL3(I+2,
   XJ)/(F2+V+VDEAD)
    YHRS5(I,J)=(YHRS3(I,J)*VDEAD+V*YHCOL3(I,J)+F2*YHRSR4
   X(I+2,J))/(V+VDEAD+F2)
    YARS5(I,J)=(YARS3(I,J)*VDEAD+V*YACOL3(I,J)+F2*YARSR4
   X(I+2,J))/(V+VDEAD+F2)
    YHCOL5(I,J)=(V*YHCOL3(I+1,J)+VB*YHCOL3(I,J)*HCKP1
   X+VDEAD*YHRS3(I+1,J))/(V+VDEAD+VB*HCKP2)
    YACOL5(I,J)=(V*YACOL3(I+1,J)+VB*YACOL3(I,J)*ACKP1
   X+VDEAD*YARS3(I+1,J))/(V+VDEAD+VB*ACKP2)
    YHCOL5(I+1,J)=(VB*YHCOL3(I+1,J)*HAKP2+
   X(V+VDEAD)*YHRSR4(I+2,J))/(V+VB*HAKP3+VDEAD)
    YACOL5(I+1,J)=(VB*YACOL3(I+1,J)*AAKP2+
   X(V+VDEAD)*YARSR4(I+2,J))/(V+VDEAD+VB*AAKP3)
    YHRS5(I+1,J)=YHCOL5(I,J)
    YARS5(I+1,J)=YACOL5(I,J)
    YHRSR5(I+2,J)=YHCOL5(I+1,J)
    YARSR5(I+2,J)=YACOL5(I+1,J)
    YHRSL5(I+2,J)=YHRSL3(I+2,J)
```

```
(Case 3 continued)
      YARSL5(I+2,J)=YARSL3(I+2,J)
      GO TO 450
452 YHCOL5(I+1,J)=((V+VDEAD)*YHRS3(I+2,J)
     X+VB*YHCOL3(I+1,J)*HCKP3)/(VDEAD+V+VB*HCKP2)
      YACOL5(I+1,J)=((V+VDEAD)*YARS3(I+2,J)
     X+VB*YACOL3(I+1,J)*ACKP3)/(VDEAD+V+VB*ACKP2)
      YHRS5(I+2,J)=YHCOL5(I+1,J)
      YARS5(I+2,J)=YACOL5(I+1,J)
450 CONTINUE
      DO 650 I=1,M
      A=(-1)**I
      IF(A)651,651,652
651 YHCOL7(I,J)=((V+VDEAD)*YHRS5(I,J)+
     XVB*YHCOL5(I,J)*HCKP2)/(V+VDEAD+VB*HCKP1)
      YACOL7(I,J)=((V+VDEAD)*YARS5(I,J)+
     XVB*YACOL5(I,J)*ACKP2)/(V+VDEAD+VB*ACKP1)
      YHCOL7(I+1,J)=(YHCOL5(I,J)*V+VB*YHCOL5(I+1,J)
     X*HAKP3+VDEAD*YHRS5(I+1,J))/(V+VDEAD+VB*HAKP2)
      YACOL7(I+1,J)=(YACOL5(I,J)*V+VB*YACOL5(I+1,J)
     X*AAKP3+VDEAD*YARS5(I+1,J))/(V+VDEAD+VB*AAKP2)
      YHRS7(I+1,J)=YHCOL7(I+1,J)
      YARS7(I+1,J)=YACOL7(I+1,J)
      YHRS7(I,J)=YHCOL7(I,J)
      YARS7(I,J)=YACOL7(I,J)
      GO TO 650
652 YHCOL7(I+1,J)=((V+VDEAD)*YHRSL5(I+1,J)
     X+VB*YHCOL5(I+1,J)*HCKP2)/(V+VDEAD+VB*HCKP1)
      YACOL7(I+1,J)=((V+VDEAD)*YARSL5(I+1,J)
     X+VB*YACOL5(I+1,J)*ACKP2)/(V+VDEAD+VB*ACKP1)
      YHRSL7(I+1,J)=YHCOL7(I+1,J)
      YARSL7(I+1,J)=YACOL7(I+1,J)
      YHRSR7(I+1,J)=(YHRSR5(I+1,J)*VDEAD+V*YHCOL5(I,J))/
     X(V+VDEAD)
      YARSR7(I+1,J)=(YARSR5(I+1,J)*VDEAD+V*YACOL5(I,J))/
     X(V+VDEAD)
      YHRS7(I+2,J)=(YHRS5(I+2,J)*VDEAD+V*YHCOL5(I+1,J))/
     X(V+VDEAD)
      YARS7(I+2,J)=(YARS5(I+2,J)*VDEAD+V*YACOL5(I+1,J))/
     X(V+VDEAD)
650 CONTINUE
      L=J
      J=J+1
      WRITE(6,3333)J
3333FORMAT(2X,'***J=',I10)
      DO 850 I=1,M
      A=(-1)**I
      IF(A)851,851,852
851 YHRS1(I,J)=(YHRS7(I,L)*VDEAD+V*YHCOL7(I,L))/(V+VDEAD)
      YARS1(I,J)=(YARS7(I,L)*VDEAD+V*YACOL7(I,L))/(V+VDEAD)
      WRITE(6,1010)YHRS1(I,J),YARS1(I,J)
      YHCOL1(I,J)=(V*YHCOL7(I+1,L)+VB*YHCOL7(I,L)*HCKP1+
     XVDEAD*YHRS7(I+1,L))/(V+VB*HCKP2+VDEAD)
```

(Case 3 continued)

```
      YACOL1(I,J)=(YARS7(I+1,L)*VDEAD+V*YACOL7(I+1,L)
     X+VB*ACKP1*YACOL7(I,L))/(V+VB*ACKP2+VDEAD)
      YHCOL1(I+1,J)=(V*YHCOL7(I+2,L)+VB*YHCOL7(I+1,L)
     X*HAKP2+VDEAD*YHRSL7(I+2,L))/(V+VDEAD+VB*HAKP1)
      YACOL1(I+1,J)=(V*YACOL7(I+2,L)+VB*YACOL7(I+1,L)
     X*AAKP2+VDEAD*YARSL7(I+2,L))/(V+VDEAD+VB*AAKP1)
      YHRS1(I+1,J)=YHCOL1(I,J)
      YARS1(I+1,J)=YACOL1(I,J)
      YHRSL1(I+2,J)=YHCOL1(I+1,J)
      YARSL1(I+2,J)=YACOL1(I+1,J)
      YHRSR1(I+2,J)=YHRSR7(I+2,L)
      YARSR1(I+2,J)=YARSR7(I+2,L)
      II=I+2
      WRITE(6,2222)II
      WRITE(6,1009)YHRSL1(I+2,J),YARSL1(I+2,J),
     XYHRSR1(I+2,J),YARSR1(I+2,J)
1009FORMAT(5X,'YHRSL1=' ,E20.5,'YARSL1=',E20.5,
     X'YHRSR1=',E20.5,'YARSR1=',E20.5)
      II=II-1
      WRITE(6,2222)II
2222FORMAT(2X,'I=',I10)
      WRITE(6,8)YHRS1(I+1,J),YARS1(I+1,J)
8     FORMAT(5X,'YHRS1=',E25.5,'YARS1=',E25.5)
      GO TO 850
852   YHCOL1(I+1,J)=(VB*YHCOL7(I+1,L)*HCKP1+
     X(V+VDEAD)*YHRS7(I+2,L))/(V+VB*HCKP2+VDEAD)
      YACOL1(I+1,J)=(VB*YACOL7(I+1,L)*ACKP1+
     X(V+VDEAD)*YARS7(I+2,L))/(V+VB*ACKP2+VDEAD)
      YHRS1(I+2,J)=YHCOL1(I+1,J)
      YARS1(I+2,J)=YACOL1(I+1,J)
      II=I+2
      WRITE(6,2222)II
      WRITE(6,1010)YHRS1(I+2,J),YARS1(I+2,J)
1010FORMAT(5X,'YHRS1=',E25.5,'YARS1=',E25.5)
850   CONTINUE
      IF(J-NCYCL)15,14,14
14    F1=F1+3.0
      F2=F2+3.0
      J=1
      IF(F1.EQ.15)GO TO 91
      GO TO 15
91    STOP
      END
```

APPENDIX 4

A TYPICAL EXAMPLE OF THE COMPUTER PROGRAMS' PRINTOUT OF RESULTS

TWO-COLUMN PROCESS

CASE 1-7 RESULTS

F1=F2=0.0

```
      $ENTRY
   YHRS5=          0.11969E 01YARS5=          0.94062E 00
   YHRS7=          0.89542E 00YARS7=          0.12357E 01
***J=       2
I=       1
   YHRS1=          0.11668E 01YARS1=          0.76594E 00
I=       2


   YHRSL1=      0.73165E 00YARSL1=      0.85895E 00YHRSR1=      0.10010E 01YARSR1=      0.95409E 00
I=       2
   YHCOL1=          0.77912E 00YACOL1=          0.11640E 01
I=       3
   YHRS1=          0.77912E 00YARS1=          0.11640E 01
   YHRS5=          0.13250E 01YARS5=          0.79500E 00
   YHRS7=          0.82250E 00YARS7=          0.13642E 01
***J=       3
I=       1
   YHRS1=          0.12751E 01YARS1=          0.65876E 00
I=       2
   YHRSL1=      0.71435E 00YARSL1=      0.87082E 00YHRSR1=      0.10007E 01YARSR1=      0.89753E 00
I=       2
   YHCOL1=          0.71945E 00YACOL1=          0.12791E 01
I=       3
   YHRS1=          0.71945E 00YARS1=          0.12791E 01
   YHRS5=          0.14086E 01YARS5=          0.72502E 00
   YHRS7=          0.77446E 00YARS7=          0.14457E 01
***J=       4
I=       1
   YHRS1=          0.13457E 01YARS1=          0.60582E 00
I=       2
   YHRSL1=      0.70363E 00YARSL1=      0.87270E 00YHRSR1=      0.10000E 01YARSR1=      0.85890E 00
I=       2
   YHCOL1=          0.68030E 00YACOL1=          0.13489E 01
I=       3
   YHRS1=          0.68030E 00YARS1=          0.13489E 01
   YHRS5=          0.14635E 01YARS5=          0.68922E 00
   YHRS7=          0.74283E 00YARS7=          0.14936E 01
***J=       5
I=       1
   YHRS1=          0.13920E 01YARS1=          0.57834E 00
I=       2
   YHRSL1=      0.69690E 00YARSL1=      0.87218E 00YHRSR1=      0.99918E 00YARSR1=      0.83601E 00
I=       2
   YHCOL1=          0.65460E 00YACOL1=          0.13891E 01
I=       3
   YHRS1=          0.65460E 00YARS1=          0.13891E 01
   YHRS5=          0.14995E 01YARS5=          0.67016E 00
   YHRS7=          0.72198E 00YARS7=          0.15209E 01
***J=       6
I=       1
   YHRS1=          0.14224E 01YARS1=          0.56363E 00
I=       2
```

```
    YHRSL1=          0.69265E 00YARSL1=          0.87133E 00YHRSR1=          0.99840E 00YARSR1=          0.82312E 00
 I=          2
    YHCOL1=          0.63770E 00YACOL1=          0.14117E 01
 I=          3
    YHRS1=           0.63770E 00YARS1=           0.14117E 01
    YHRS5=           0.15233E 01YARS5=           0.65978E 00
    YHRS7=           0.70823E 00YARS7=           0.15364E 01
 ***J=          7
 I=          1
    YHRS1=           0.14424E 01YARS1=           0.55560E 00
 I=          2
    YHRSL1=          0.68993E 00YARSL1=          0.87064E 00YHRSR1=          0.99776E 00YARSR1=          0.81601E 00
 I=          2
    YHCOL1=          0.62657E 00YACOL1=          0.14244E 01

 I=          3
    YHRS1=           0.62657E 00YARS1=           0.14244E 01
    YHRS5=           0.15389E 01YARS5=           0.65405E 00
    YHRS7=           0.69916E 00YARS7=           0.15450E 01
 ***J=          8
 I=          1
    YHRS1=           0.14556E 01YARS1=           0.55117E 00
 I=          2
    YHRSL1=          0.68819E 00YARSL1=          0.87016E 00YHRSR1=          0.99726E 00YARSR1=          0.81210E 00
 I=          2
    YHCOL1=          0.61924E 00YACOL1=          0.14315E 01
 I=          3
    YHRS1=           0.61924E 00YARS1=           0.14315E 01
    YHRS5=           0.15493E 01YARS5=           0.65086E 00
    YHRS7=           0.69316E 00YARS7=           0.15499E 01
 ***J=          9
 I=          1
    YHRS1=           0.14643E 01YARS1=           0.54871E 00
 I=          2
    YHRSL1=          0.68707E 00YARSL1=          0.86984E 00YHRSR1=          0.99689E 00YARSR1=          0.80996E 00
 I=          2
    YHCOL1=          0.61440E 00YACOL1=          0.14355E 01
 I=          3
    YHRS1=           0.61440E 00YARS1=           0.14355E 01
    YHRS5=           0.15561E 01YARS5=           0.64906E 00
    YHRS7=           0.68920E 00YARS7=           0.15527E 01
 ***J=          10
 I=          1
    YHRS1=           0.14700E 01YARS1=           0.54733E 00
 I=          2
    YHRSL1=          0.68634E 00YARSL1=          0.86965E 00YHRSR1=          0.99662E 00YARSR1=          0.80877E 00
 I=          2
    YHCOL1=          0.61120E 00YACOL1=          0.14377E 01
 I=          3
    YHRS1=           0.61120E 00YARS1=           0.14377E 01
    YHRS5=           0.15607E 01YARS5=           0.64805E 00
    YHRS7=           0.68657E 00YARS7=           0.15542E 01
 ***J=          11
```

```
I=          1
   YHRS1=              0.14739E 01YARS1=              0.54655E 00
I=          2
   YHRSL1=          0.68587E 00YARSL1=          0.86953E 00YHRSR1=          0.99643E 00YARSR1=          0.80812E 00
I=          2
   YHCOL1=              0.60908E 00YACOL1=              0.14389E 01
I=          3
   YHRS1=              0.60908E 00YARS1=              0.14389E 01
   YHRS5=              0.15637E 01YARS5=              0.64748E 00
   YHRS7=              0.68483E 00YARS7=              0.15551E 01
***J=        12
I=          1
   YHRS1=              0.14764E 01YARS1=              0.54611E 00
I=          2
   YHRSL1=          0.68556E 00YARSL1=          0.86946E 00YHRSR1=          0.99629E 00YARSR1=          0.80775E 00
I=          2
   YHCOL1=              0.60768E 00YACOL1=              0.14397E 01
I=          3
   YHRS1=              0.60768E 00YARS1=              0.14397E 01
   YHRS5=              0.15656E 01YARS5=              0.64716E 00

   YHRS7=              0.68368E 00YARS7=              0.15556E 01
***J=        13
I=          1
   YHRS1=              0.14780E 01YARS1=              0.54586E 00
I=          2
   YHRSL1=          0.68535E 00YARSL1=          0.86941E 00YHRSR1=          0.99619E 00YARSR1=          0.80754E 00
I=          2
   YHCOL1=              0.60676E 00YACOL1=              0.14401E 01
I=          3
   YHRS1=              0.60676E 00YARS1=              0.14401E 01
   YHRS5=              0.15670E 01YARS5=              0.64697E 00
   YHRS7=              0.68291E 00YARS7=              0.15559E 01
***J=        14
I=          1
   YHRS1=              0.14791E 01YARS1=              0.54572E 00
I=          2
   YHRSL1=          0.68522E 00YARSL1=          0.86938E 00YHRSR1=          0.99613E 00YARSR1=          0.80743E 00
I=          2
   YHCOL1=              0.60614E 00YACOL1=              0.14403E 01
I=          3
   YHRS1=              0.60614E 00YARS1=              0.14403E 01
   YHRS5=              0.15678E 01YARS5=              0.64687E 00
   YHRS7=              0.68240E 00YARS7=              0.15560E 01
***J=        15
I=          1
   YHRS1=              0.14799E 01YARS1=              0.54564E 00
I=          2
   YHRSL1=          0.68513E 00YARSL1=          0.86937E 00YHRSR1=          0.99608E 00YARSR1=          0.80736E 00
I=          2
   YHCOL1=              0.60573E 00YACOL1=              0.14404E 01
I=          3
```

```
    YHRS1=          0.60573E 00YARS1=          0.14404E 01.
    YHRS5=          0.15684E 01YARS5=          0.64680E 00
    YHRS7=          0.68207E 00YARS7=          0.15561E 01
***J=       16
I=          1
    YHRS1=          0.14804E 01YARS1=          0.54559E 00
I=          2
    YHRSL1=     0.68507E 00YARSL1=     0.86936E 00YHRSR1=     0.99605E 00YARSR1=     0.80732E 00
I=          2
    YHCOL1=          0.60546E 00YACOL1=          0.14405E 01
I=          3
    YHRS1=          0.60546E 00YARS1=          0.14405E 01
    YHRS5=          0.15688E 01YARS5=          0.64677E 00
    YHRS7=          0.68184E 00YARS7=          0.15561E 01
***J=       17
I=          1
    YHRS1=          0.14807E 01YARS1=          0.54557E 00
I=          2
    YHRSL1=     0.68503E 00YARSL1=     0.86935E 00YHRSR1=     0.99603E 00YARSR1=     0.80730E 00
I=          2
    YHCOL1=          0.60528E 00YACOL1=          0.14405E 01
I=          3
    YHRS1=          0.60528E 00YARS1=          0.14405E 01
    YHRS5=          0.15690E 01YARS5=          0.64675E 00
    YHRS7=          0.68169E 00YARS7=          0.15562E 01
***J=       18
I=          1

    YHRS1=          0.14809E 01YARS1=          0.54555E 00
I=          2
    YHRSL1=     0.68501E 00YARSL1=     0.86935E 00YHRSR1=     0.99601E 00YARSR1=     0.80729E 00
I=          2
    YHCOL1=          0.60516E 00YACOL1=          0.14405E 01
I=          3
    YHRS1=          0.60516E 00YARS1=          0.14405E 01
    YHRS5=          0.15692E 01YARS5=          0.64674E 00
    YHRS7=          0.68159E 00YARS7=          0.15562E 01
***J=       19
I=          1
    YHRS1=          0.14810E 01YARS1=          0.54554E 00
I=          2
    YHRSL1=     0.68499E 00YARSL1=     0.86934E 00YHRSR1=     0.99600E 00YARSR1=     0.80728E 00
I=          2
    YHCOL1=          0.60508E 00YACOL1=          0.14405E 01
I=          3
    YHRS1=          0.60508E 00YARS1=          0.14405E 01
    YHRS5=          0.15693E 01YARS5=          0.64673E 00
    YHRS7=          0.68153E 00YARS7=          0.15562E 01
***J=       20
I=          1
    YHRS1=          0.14811E 01YARS1=          0.54554E 00
I=          2
    YHRSL1=     0.68498E 00YARSL1=     0.86934E 00YHRSR1=     0.99600E 00YARSR1=     0.80728E 00
```

```
 I=          2
    YHCOL1=              0.60503E 00YACOL1=              0.14406E 01
 I=          3
    YHRS1=               0.60503E 00YARS1=               0.14406E 01
    YHRS5=               0.15694E 01YARS5=               0.64672E 00
    YHRS7=               0.68148E 00YARS7=               0.15562E 01
 ***J=         21
 I=          1
    YHRS1=               0.14812E 01YARS1=               0.54553E 00
 I=          2
    YHRSL1=         0.68497E 00YARSL1=         0.86934E 00YHRSR1=         0.99599E 00YARSR1=         0.80727E 00
 I=          2
    YHCOL1=              0.60499E 00YACOL1=              0.14406E 01
 I=          3
    YHRS1=               0.60499E 00YARS1=               0.14406E 01
    YHRS5=               0.15694E 01YARS5=               0.64672E 00
    YHRS7=               0.68145E 00YARS7=               0.15562E 01
 ***I=         22
 I=          1
    YHRS1=               0.14812E 01YARS1=               0.54553E 00
 I=          2
    YHRSL1=         0.68496E 00YARSL1=         0.86934E 00YHRSR1=         0.99598E 00YARSR1=         0.80727E 00
 I=          2
    YHCOL1=              0.60497E 00YACOL1=              0.14406E 01
 I=          3
    YHRS1=               0.60497E 00YARS1=               0.14406E 01
    YHRS5=               0.15695E 01YARS5=               0.64672E 00
    YHRS7=               0.68143E 00YARS7=               0.15562E 01
 ***J=         23
 I=          1
    YHRS1=               0.14812E 01YARS1=               0.54553E 00
 I=          2
    YHRSL1=         0.68496E 00YARSL1=         0.86933E 00YHRSR1=         0.99598E 00YARSR1=         0.80727E 00

 I=          2
    YHCOL1=              0.60495E 00YACOL1=              0.14406E 01
 I=          3
    YHRS1=               0.60495E 00YARS1=               0.14406E 01
    YHRS5=               0.15695E 01YARS5=               0.64672E 00
    YHRS7=               0.68142E 00YARS7=               0.15562E 01
 ***J=         24
 I=          1
    YHRS1=               0.14813E 01YARS1=               0.54553E 00
 I=          2
    YHRSL1=         0.68495E 00YARSL1=         0.86933E 00YHRSR1=         0.99598E 00YARSR1=         0.80726E 00
 I=          2
    YHCOL1=              0.60494E 00YACOL1=              0.14406E 01
 I=          3
    YHRS1=               0.60494E 00YARS1=               0.14406E 01
    YHRS5=               0.15695E 01YARS5=               0.64671E 00
    YHRS7=               0.68141E 00YARS7=               0.15562E 01
 ***J=         25
 I=          1
```

```
    YHRS1=          0.14813E 01YARS1=          0.54552E 00
I=          2
    YHRSL1=      0.68495E 00YARSL1=      0.86933E 00YHRSR1=      0.99598E 00YARSR1=      0.80726E 00
I=          2
    YHCOL1=          0.60493E 00YACOL1=          0.14405E 01
I=          3
    YHRS1=          0.60493E 00YARS1=          0.14405E 01
    YHRS5=          0.15695E 01YARS5=          0.64671E 00
    YHRS7=          0.68140E 00YARS7=          0.15562E 01
***J=          26
I=          1
    YHRS1=          0.14813E 01YARS1=          0.54552E 00
I=          2
    YHRSL1=      0.68495E 00YARSL1=      0.86933E 00YHRSR1=      0.99597E 00YARSR1=      0.80726E 00
I=          2
    YHCOL1=          0.60493E 00YACOL1=          0.14405E 01
I=          3
    YHRS1=          0.60493E 00YARS1=          0.14405E 01
    YHRS5=          0.15695E 01YARS5=          0.64671E 00
    YHRS7=          0.68140E 00YARS7=          0.15562E 01
***J=          27
I=          1
    YHRS1=          0.14813E 01YARS1=          0.54552E 00
I=          2
    YHRSL1=      0.68495E 00YARSL1=      0.86933E 00YHRSR1=      0.99597E 00YARSR1=      0.80726E 00
I=          2
    YHCOL1=          0.60492E 00YACOL1=          0.14405E 01
I=          3
    YHRS1=          0.60492E 00YARS1=          0.14405E 01
    YHRS5=          0.15695E 01YARS5=          0.64671E 00
    YHRS7=          0.68139E 00YARS7=          0.15562E 01
***J=          28
I=          1
    YHRS1=          0.14813E 01YARS1=          0.54552E 00
I=          2
    YHRSL1=      0.68494E 00YARSL1=      0.86933E 00YHRSR1=      0.99597E 00YARSR1=      0.80726E 00
I=          2
    YHCOL1=          0.60492E 00YACOL1=          0.14405E 01
I=          3

    YHRS1=          0.60492E 00YARS1=          0.14405E 01
    YHRS5=          0.15695E 01YARS5=          0.64671E 00
    YHRS7=          0.68139E 00YARS7=          0.15562E 01
***J=          29
I=          1
    YHRS1=          0.14813E 01YARS1=          0.54552E 00
I=          2
    YHRSL1=      0.68494E 00YARSL1=      0.86932E 00YHRSR1=      0.99597E 00YARSR1=      0.80726E 00
I=          2
    YHCOL1=          0.60492E 00YACOL1=          0.14405E 01
I=          3
    YHRS1=          0.60492E 00YARS1=          0.14405E 01
```

```
    YHRS5=          0.15695E 01YARS5=          0.64671E 00
    YHRS7=          0.68139E 00YARS7=          0.15562E 01
***J=       30
I=          1
    YHRS1=          0.14813E 01YARS1=          0.54552E 00
I=          2
    YHRSL1=     0.68494E 00YARSL1=     0.86932E 00YHRSR1=     0.99597E 00YARSR1=     0.80726E 00
I=          2
    YHCOL1=          0.60491E 00YACOL1=          0.14405E 01
I=          3
    YHRS1=          0.60491E 00YARS1=          0.14405E 01
    YHRS5=          0.15695E 01YARS5=          0.64671E 00
    YHRS7=          0.68139E 00YARS7=          0.15562E 01
***J=       31
I=          1
    YHRS1=          0.14813E 01YARS1=          0.54552E 00
I=          2
    YHRSL1=     0.68494E 00YARSL1=     0.86932E 00YHRSR1=     0.99596E 00YARSR1=     0.80725E 00
I=          2
    YHCOL1=          0.60491E 00YACOL1=          0.14405E 01
I=          3
    YHRS1=          0.60491E 00YARS1=          0.14405E 01
    YHRS5=          0.15695E 01YARS5=          0.64671E 00
    YHRS7=          0.68138E 00YARS7=          0.15562E 01
***J=       32
I=          1
    YHRS1=          0.14813E 01YARS1=          0.54552E 00
I=          2
    YHRSL1=     0.68494E 00YARSL1=     0.86932E 00YHRSR1=     0.99596E 00YARSR1=     0.80725E 00
I=          2
    YHCOL1=          0.60491E 00YACOL1=          0.14405E 01
I=          3
    YHRS1=          0.60491E 00YARS1=          0.14405E 01
    YHRS5=          0.15695E 01YARS5=          0.64670E 00
    YHRS7=          0.68138E 00YARS7=          0.15562E 01
***J=       33
I=          1
    YHRS1=          0.14813E 01YARS1=          0.54551E 00
I=          2
    YHRSL1=     0.68494E 00YARSL1=     0.86932E 00YHRSR1=     0.99596E 00YARSR1=     0.80725E 00
I=          2
    YHCOL1=          0.60491E 00YACOL1=          0.14405E 01
I=          3
    YHRS1=          0.60491E 00YARS1=          0.14405E 01
    YHRS5=          0.15695E 01YARS5=          0.64670E 00
    YHRS7=          0.68138E 00YARS7=          0.15562E 01

***J=       34
I=          1
    YHRS1=          0.14813E 01YARS1=          0.54551E 00
I=          2
    YHRSL1=     0.68494E 00YARSL1=     0.86931E 00YHRSR1=     0.99596E 00YARSR1=     0.80725E 00
I=          2
```

```
    YHCOL1=          0.60491E 00YACOL1=          0.14405E 01
 I=          3
    YHRS1=           0.60491E 00YARS1=           0.14405E 01
    YHRS5=           0.15695E 01YARS5=           0.64670E 00
    YHRS7=           0.68138E 00YARS7=           0.15562E 01
***J=          35
 I=          1
    YHRS1=           0.14813E 01YARS1=           0.54551E 00
 I=          2
    YHRSL1=       0.68493E 00YARSL1=       0.86931E 00YHRSR1=       0.99596E 00YARSR1=       0.80725E 00
 I=          2
    YHCOL1=          0.60491E 00YACOL1=          0.14405E 01
 I=          3
    YHRS1=           0.60491E 00YARS1=           0.14405E 01
    YHRS5=           0.15695E 01YARS5=           0.64670E 00
    YHRS7=           0.68138E 00YARS7=           0.15562E 01
***J=          36
 I=          1
    YHRS1=           0.14813E 01YARS1=           0.54551E 00
 I=          2
    YHRSL1=       0.68493E 00YARSL1=       0.86931E 00YHRSR1=       0.99595E 00YARSR1=       0.80724E 00
 I=          2
    YHCOL1=          0.60491E 00YACOL1=          0.14405E 01
 I=          3
    YHRS1=           0.60491E 00YARS1=           0.14405E 01
    YHRS5=           0.15695E 01YARS5=           0.64670E 00
    YHRS7=           0.68138E 00YARS7=           0.15562E 01
***J=          37
 I=          1
    YHRS1=           0.14813E 01YARS1=           0.54551E 00
 I=          2
    YHRSL1=       0.68493E 00YARSL1=       0.86931E 00YHRSR1=       0.99595E 00YARSR1=       0.80724E 00
 I=          2
    YHCOL1=          0.60490E 00YACOL1=          0.14405E 01
 I=          3
    YHRS1=           0.60490E 00YARS1=           0.14405E 01
    YHRS5=           0.15695E 01YARS5=           0.64670E 00
    YHRS7=           0.68138E 00YARS7=           0.15562E 01
***J=          38
 I=          1
    YHRS1=           0.14812E 01YARS1=           0.54551E 00
 I=          2
    YHRSL1=       0.68493E 00YARSL1=       0.86931E 00YHRSR1=       0.99595E 00YARSR1=       0.80724E 00
 I=          2
    YHCOL1=          0.60490E 00YACOL1=          0.14405E 01
 I=          3
    YHRS1=           0.60490E 00YARS1=           0.14405E 01
    YHRS5=           0.15695E 01YARS5=           0.64670E 00
    YHRS7=           0.68137E 00YARS7=           0.15561E 01
***J=          39
 I=          1
    YHRS1=           0.14812E 01YARS1=           0.54551E 00
```

```
 I=           2
    YHRSL1=          0.68493E 00YARSL1=          0.86930E 00YHRSR1=          0.99595E 00YARSR1=          0.80724E 00
 I=           2
    YHCOL1=               0.60490E 00YACOL1=               0.14405E 01
 I=           3
    YHRS1=               0.60490E 00YARS1=               0.14405E 01
    YHRS5=               0.15695E 01YARS5=               0.64669E 00
    YHRS7=               0.68137E 00YARS7=               0.15561E 01
***J=          40
 I=           1
    YHRS1=               0.14812E 01YARS1=               0.54551E 00
 I=           2
    YHRSL1=          0.68493E 00YARSL1=          0.86930E 00YHRSR1=          0.99595E 00YARSR1=          0.80724E 00
 I=           2
    YHCOL1=               0.60490E 00YACOL1=               0.14405E 01
 I=           3
    YHRS1=               0.60490E 00YARS1=               0.14405E 01
    YHRS5=               0.11696E 01YARS5=               0.91607E 00
    YHRS7=               0.88263E 00YARS7=               0.11874E 01
```

APPENDIX 5

NOMENCLATURE

NOMENCLATURE

A = The protein component, Albumin.

AAKP1 = The anionic equilibrium separation factor for albumin at a pH level of P_1.

AAKP2 = The anionic equilibrium separation factor for albumin at a pH level of P_2.

AAKP3 = The anionic equilibrium separation factor for albumin at a pH level of P_3.

ACKP1 = The cationic equilibrium separation factor for albumin at a pH level of P_1.

ACKP2 = The cationic equilibrium separation factor for albumin at a pH level of P_2.

ACKP3 = The cationic equilibrium separation factor for albumin at a pH level of P_3.

BR = The bottom reservoir.

BS = The x-y point on the $k^-_{p_1}$ equilibrium line which marks the steady state concentration of the bottom reservoir after many cycles have elapsed.

B1
B2
B3 = The x-y point on the $k^-_{p_1}$ equilibrium line which represents the concentration of the bottom reservoir during each cycle.(S1toS3)

D = The dead volume of the liquid phase, cm^3.

F1 = The first feed stream in a continuous separation process.

F2 = The second feed stream in a continuous separation process.

H = The protein component, Hemoglobin.

HAKP1 = The anionic equilibrium separation factor for hemoglobin at a pH level of P_1.

HAKP2 = The anionic equilibrium separation factor for hemoglobin at a pH level of P_2.

HAKP3 = The anionic equilibrium separation factor for hemoglobin at a pH level of P_3.

HCKP1 = The cationic equilibrium separation factor for hemoglobin at a pH level of P_1.

HCKP2 = The cationic equilibrium separation factor for hemoglobin at a pH level of P_2.

HCKP3 = The cationic equilibrium separation factor for hemoglobin at a pH level of P_3.

I = The isoelectric point.

I_A = The isoelectric point of Albumin.

I_H = The isoelectric point of Hemoglobin.

J = The variable in the computer programs representing which cycle it is performing.

k = The equilibrium separation factor.

$k^+_{P_1}$ = The anionic equilibrium separation factor at a pH level of P_1.

$k^+_{P_2}$ = The anionic equilibrium separation factor at a pH level of P_2.

$k^{+}_{p_3}$ = The anionic equilibrium separation factor at a pH level of P_3.

$k^{-}_{p_1}$ = The cationic equilibrium separation factor at a pH level of P_1.

$k^{-}_{p_2}$ = The cationic equilibrium separation factor at a pH level of P_2.

$k^{-}_{p_3}$ = The cationic equilibrium separation factor at a pH level of P_3.

M = The constant used for DoLoop calculations.

n = The number of cycles. (In the Figures)

NCYCL = The number of cycles. (In the Computer Programs.)

$P_1=p_1$ = The high pH level (pH=8.0).

$P_2=p_2$ = The middle pH level (pH=6.0).

$P_3=p_3$ = The low pH level (pH=4.0).

pH = pH= $-\log(H_3O^+)$. Acidic solutions have a pH less than 7, and basic solutions have a pH above 7. (6:272)

Protein_{A} = Hemoglobin.

Protein_{B} = Albumin.

Q = The reservoir displacement rate.(cm^3/sec)

R^- = A cationic ion exchange column.

R^+ = An anionic ion exchange column.

R1 = The top reservoir.

R3 = The bottom reservoir. (Two-column process)

RL2 = The left middle reservoir. (Two-column process)

RR2 = The right middle reservoir. (Two-column process)

S1 to S4 = Stages 1 through 4, respectively.

T1 to T3 = The x-y point on the $k_{p_2}^{-}$ equilibrium line which represents the concentration of the top reservoir during each cycle.(S1 to S3)

t_i = The amount of time allotted for stage i to take place, where i is I through VIII.

TR = The top reservoir.

TS = The x-y point on the $k_{p_2}^{-}$ equilibrium line which marks the steady state concentration of the top reservoir after many cycles have elapsed.

V = The volume of the fluid phase, cm^3.

$\overline{V}$ = The volume of the ion exchanger in the column, cm^3.

VB = The volume of an ion exchanger in the column, cm^3. (Same as $\overline{V}$)

V_B = The bottom reservoir's dead volume, cm^3.

VDEAD = The dead volume of the liquid phase, cm^3. (Same as D)

V_T = The top reservoir's dead volume, cm^3.

x=X = The concentration of a protein in the solid phase.

x_{B2} = The concentration of a given protein in the
x_{B3} solid phase for the one-column process (Figure III)- Stage 4, Cycles 1 and 2,respectively.

X_{CI} = The concentration of Protein A in the one-column process (Figure II)- Stage I (Column).

X_{CII} = The concentration of Protein A in the column of the one-column process (Figure II)-StageII.

X_{CIII} = The concentration of Protein A in the column of the one-column process (Figure II)-Stage III.

X_{CIV} = The concentration of Protein A in the column of the one-column process (Figure II)- Stage IV.

XACOLK(I,J)= The concentration of Albumin in the solid phase of column I, stage K, cycle J.

XHCOLK(I,J)= The concentration of Hemoglobin in the solid phase of column I, stage K, cycle J.

x_o = The concentration of a protein in the solid phase, initially.

x_{T1} = The concentration of a given protein in the
x_{T2} solid phase for the one-column case (Figure III)- Stages 2 and 3, Cycles1 and 2. (x_{T1}- Cycle 1, x_{T2}- Cycle 2).

x_∞ = The concentration of a given protein in the solid phase if the process were continued an infinite number of cycles.

$y=Y$ = The concentration of a protein in the fluid phase.

y_{B1} = The concentration of a given protein in the fluid phase for the one-column case (Figure III)- First Cycle- (Bottom Reservoir- Stage 1 and 2, Column- Stage 3).

y_{B2} = The concentration of a given protein in the fluid phase for the one-column case (Figure III)- First Cycle-(Column-Stage 4), Second Cycle-(Bottom Reservoir-Stage 1 and 2, Column- Stage 3)

y_{B3} = The concentration of a given protein in the fluid phase for the one-column case (Figure III)- Second Cycle-(Column-Stage 4), Third Cycle-(Bottom Reservoir- Stage 1 and 2, Column- Stage 3)

y_{BRIII} = The concentration of Protein A in the one-column case (Figure II)- Stage III.(Bottom Reservoir)

y_{BRIV} = The concentration of Protein A in the one-column case (Figure II)- Stage IV.(Bottom Reservoir).

YAAO
YACO
YHAO
YHCO
} Not used in the computer programs.

YACOLK(I,J) = The concentration of Albumin in the liquid phase of column I, stage K, cycle J.

YHCOLK(I,J) = The concentration of Hemoglobin in the liquid phase of column I, stage K, cycle J.

YARSK(I,J) = The concentration of Albumin in the liquid phase of reservoir I, stage K, cycle J.

YHRSK(I,J) = The concentration of Hemoglobin in the liquid phase of reservoir I, stage K, cycle J.

YARSLK(I,J) = The concentration of Albumin in the liquid phase of the left reservoir I, stage K, cycle J.

YHRSLK(I,J) = The concentration of Hemoglobin in the liquid phase of the left reservoir I, stage K, cycle J.

YARSRK(I,J) = The concentration of Albumin in the liquid phase of the right reservoir I, stage K, cycle J.

YHRSRK(I,J) = The concentration of Hemoglobin in the liquid phase of the right reservoir I, stage K, cycle J.

y_o = The concentration of a given protein initially in the fluid phase.

y_{T1} = The concentration of a given protein in the fluid phase for the one-column case (Figure III)- Cycle I- (Column- Stage 2, Top Reservoir- Stages 3 and 4), Second Cycle- (Column -Stage 1).

y_{T2} = The concentration of a given protein in the fluid phase for the one-column case (Figure III)-Second Cycle-(Column-Stage 2, Top Reservoir-Stages 3 and 4),Third Cycle-Col.S1

y_{TRI} = The concentration of Protein A in the one-column process (Figure II)- Stage I, (Top Reservoir).

y_{TRII} = The concentration of Protein A in the one-column process (Figure II)- Stage II, (Top Reservoir).

SYMBOLS

+ = anion.

- = cation.

α = The separation factor.

* = The multiplication sign. (After the title of a table or figure, this sign refers to an explanatory note at the bottom of the page.)

SELECTED BIBLIOGRAPHY

1. Chen, H.T., et al. "Separation of Proteins Via pH Parametric Pumping," August, 1979.

2. Chen, H.T., et al. "Continuous Frationation of Protein Mixtures by pH Parametric Pumping: Experiment," AICHE Journal, 25:320-328, March, 1979.

3. Chen, H.T., et al. "Separation of Proteins Via Multicolumn pH Parametric Pumping," August, 1979.

4. Perry, R.H., et al. Adsorption and Ion Exchange, Section 16 of Chemical Engineers' Handbook. McGraw-Hill, Inc., 1973.

5. Sabadell, et al. "Parametric Pumping with pH," Separation Science, 5:171-181, 1970.

6. Sienko, M.J., et al. Chemistry. McGraw-Hill Book Book Company, 1971.