Axiomatizing modal inclusion logic

Author:
Matilda Häggblom

Supervisors:
Fan Yang
Aleksi Anttila

2022

HELSINGIN YLIOPISTO — HELSINGFORS UNIVERSITET — UNIVERSITY OF HELSINKI

Tiedekunta/Osasto — Fakultet/Sektion — Faculty	Laitos — Institution — Department
Faculty of Science	Department of Mathematics and Statistics

Tekijä — Författare — Author
Matilda Cajsa Emilia Häggblom

Työn nimi — Arbetets titel — Title

Axiomatizing modal inclusion logic

Oppiaine — Läroämne — Subject
Mathematics

Työn laji — Arbetets art — Level	Aika — Datum — Month and year	Sivumäärä — Sidoantal — Number of pages
Master's thesis	August 2022	65

Tiivistelmä — Referat — Abstract

Modal inclusion logic is modal logic extended with inclusion atoms. It is the modal variant of first-order inclusion logic, which was introduced by Galliani (2012). Inclusion logic is a main variant of dependence logic (Väänänen 2007). Dependence logic and its variants adopt team semantics, introduced by Hodges (1997). Under team semantics, a modal (inclusion) logic formula is evaluated in a set of states, called a team. The inclusion atom is a type of dependency atom, which describes that the possible values a sequence of formulas can obtain are values of another sequence of formulas. In this thesis, we introduce a sound and complete natural deduction system for modal inclusion logic, which is currently missing in the literature.

The thesis consists of an introductory part, in which we recall the definitions and basic properties of modal logic and modal inclusion logic, followed by two main parts. The first part concerns the expressive power of modal inclusion logic. We review the result of Hella and Stumpf (2015) that modal inclusion logic is expressively complete: A class of Kripke models with teams is closed under unions, closed under k-bisimulation for some natural number k, and has the empty team property if and only if the class can be defined with a modal inclusion logic formula. Through the expressive completeness proof, we obtain characteristic formulas for classes with these three properties. This also provides a normal form for formulas in $\mathcal{MIL}$. The proof of this result is due to Hella and Stumpf, and we suggest a simplification to the normal form by making it similar to the normal form introduced by Kontinen et al. (2014).

In the second part, we introduce a sound and complete natural deduction proof system for modal inclusion logic. Our proof system builds on the proof systems defined for modal dependence logic and propositional inclusion logic by Yang (2017, 2022). We show the completeness theorem using the normal form of modal inclusion logic.

Avainsanat — Nyckelord — Keywords
dependence logic, team semantics, inclusion logic, modal logic

Säilytyspaikka — Förvaringsställe — Where deposited
Kumpula Campus Library

Muita tietoja — Övriga uppgifter — Additional information

Contents

Chapter 1

Introduction

In this thesis, we axiomatize modal inclusion logic, which is the extension of modal logic with the inclusion atom and based on team semantics. The inclusion atom lets us make statements such as: There is a store in town that sells flowers but not food. In this example, all stores in town are collected in a *team* T, and the statement can be formalized as $T \models \top\bot \subseteq$ 'flowers''food'.

First-order team semantics was introduced by Hodges in [19, 20], and team semantics for modal logic was introduced by Väänänen in [26]. For modal logics, a team is a set of states from the Kripke model. Formulas are then evaluated in a team, as opposed to a single state. Under team semantics, extending a logic with certain dependency atoms becomes interesting, first done by Väänänen with the dependence atom [25]. Other variants were later introduced, such as the independence atom, introduced by Grädel and Väänänen in [14], and the inclusion atom, introduced by Galliani in [10], where Galliani adapted the inclusion dependencies from database theory, presented in, e.g., [4], to the team semantics setting. First-order inclusion logic was shown in [11] to be equivalent to positive greatest fixed point logic, and thus captures the complexity class P over finite ordered structures. In the case of modal inclusion logic ($\mathcal{MIL}$), modal logic is extended with the inclusion atom. For modal logic formulas $\alpha_1, \ldots, \alpha_n, \beta_1, \ldots, \beta_n$, the semantics of the inclusion atom is as follows: A team satisfies the inclusion atom $\alpha_1 \ldots \alpha_n \subseteq \beta_1 \ldots \beta_n$, if all values the tuple $\alpha_1 \ldots \alpha_n$ can obtain in the team can also be realized for the tuple $\beta_1 \ldots \beta_n$ somewhere in the team.

Two closure properties that are of particular interest when examining a team-based logic are the downwards closure property and the union closure property. A logic has the downwards closure property if whenever a formula in the logic is satisfied by a team T, it is also satisfied by any subteam $T' \subseteq T$. A logic is closed under unions if any number of teams individually satisfy a formula in the logic, then their union satisfy the formula. The usual modal logic (with team semantics) enjoyes both properties, but because of

the added inclusion atom, $\mathcal{MIL}$ does not have the downwards closure property. Still, $\mathcal{MIL}$ has the union closure property, which places it in a collection of team-based union closed logics that have just recently received more attention in the literature (see, e.g., [2, 18, 30, 11, 13, 28, 21, 15, 16]). In this thesis, we contribute to the literature on team-based union closed modal logics by introducing a sound and complete natural deduction proof system for $\mathcal{MIL}$.

In addition to being closed under unions, $\mathcal{MIL}$ has two more important properties: It is invariant under bisimulation, and has the empty team property. A logic has the empty team property if all formulas are satisfied by the empty team, and a logic is invariant under bisimulation if Kripke models with teams that are bisimilar satisfy the same formulas.

We review the proof of Hella and Stumpf in [18] that modal inclusion logic is expressively complete: A class of Kripke models with teams is closed under unions, invariant under k-bisimulation for some natural number k, and has the empty team property if and only if the class can be defined with an $\mathcal{MIL}$-formula. Through the expressive completeness proof, we obtain characteristic formulas for classes with these three properties. This also yields a normal form for formulas of $\mathcal{MIL}$: Each $\mathcal{MIL}$-formula is equivalent to a formula in this normal form. Additionally, we suggest a simplification to the normal form presented in [18], by simplifying the inclusion atom part, similar to the normal form introduced by Kontinen et al. for modal team logic in [22].

For the usual modal logics, a Hilbert-style proof system is often used when axiomatizing the logics [29]. Since $\mathcal{MIL}$ does not have an implication, we instead use a natural deduction proof system. Our proof system for $\mathcal{MIL}$ builds on the proof systems defined for modal logic and propositional inclusion logic by Yang [29, 30].

To show compactness of $\mathcal{MIL}$, we use the fact that modal team logic is compact, as shown by Lück in [23]. The completeness theorem is proved using compactness and the normal form.

The structure of the thesis is as follows. In Chapter 2, we define modal inclusion logic and recall its basic properties. In Chapter 3, we show that modal inclusion logic is expressively complete, and obtain the normal form for the logic. In Chapter 4, we introduce the natural deduction proof system for modal inclusion logic and show that it is sound and complete. We conclude the thesis and discuss future work in Chapter 5.

Chapter 2

Preliminaries

In this chapter, we define modal logic and modal inclusion logic with team semantics, and recall some basic properties of the two logics. The chapter is divided into two sections. The first section recalls the syntax and team semantics of the two logics, and the second section recalls their basic properties. In particular, the usual modal logic (with team semantics) has the flatness property, and modal inclusion logic has the empty team property and is closed under unions.

2.1 Syntax and team semantics

In this section we present the syntax and semantics for the usual modal logic, as well as the team semantics for modal logic. We will call formulas of the usual modal logic *classical* formulas. We then extend modal logic to modal inclusion logic, and present its team semantics.

Definition 2.1. Let Φ be a set of propositional symbols. The syntax for modal logic $\mathcal{ML}(\Phi)$ is given by:

$$\alpha := p \mid \bot \mid \neg\alpha \mid (\alpha \vee \alpha) \mid (\alpha \wedge \alpha) \mid \Diamond\alpha \mid \Box\alpha,$$

where $p \in \Phi$.

A *Kripke model* $K = (W, R, V)$ consists of a set W of *states* (also known in the literature as *possible worlds* or *nodes*), an *accessibility relation* $R \subseteq W \times W$ and a *valuation function* $V : \Phi \to \mathcal{P}(W)$, where Φ is a set of propositional symbols.

Definition 2.2. The Kripke semantics for $\mathcal{ML}$ are given by the following clauses:

$$\begin{aligned}
K, w \models p &\iff w \in V(p). \\
K, w \models \bot & \quad \text{never holds.} \\
K, w \models \neg\alpha &\iff K, w \not\models \alpha. \\
K, w \models \alpha \vee \beta &\iff K, w \models \alpha \text{ or } K, w \models \beta. \\
K, w \models \alpha \wedge \beta &\iff K, w \models \alpha \text{ and } K, w \models \beta. \\
K, w \models \Diamond\alpha &\iff K, v \models \alpha \text{ for some } v \text{ such that } wRv. \\
K, w \models \Box\alpha &\iff K, v \models \alpha \text{ for all } v \text{ such that } wRv.
\end{aligned}$$

We also define the atom *top* by $\top := \neg\bot$, for which $K, w \models \top$ always holds. Next we recall some definitions regarding *teams*.

Definition 2.3. Let $K = (W, R, V)$ be a Kripke model.

(i) T is a team of K if $T \subseteq W$.

(ii) Let T be a team of K. The *image* of T is $R[T] = \{v \in W \mid \exists w \in T : wRv\}$ and the *preimage* of T is $R^{-1}[T] = \{w \in W \mid \exists v \in T : wRv\}$.

(iii) Let T and S be teams of K. We write TRS if $S \subseteq R[T]$ and $T \subseteq R^{-1}[S]$.

In other words, TRS if and only if every state in S is accessible (by the relation R) from a state in T, and every state in T has an accessible state in S. We say that such a team S is a *successor team* of T.

Example 2.4. We give an example of a Kripke model with a team. Let $\Phi = \{p, q\}$ and let $K = (W, R, V)$ be a Kripke model with $W = \{w_1, w_2, w_3\}$, $R = \{(w_1, w_1), (w_2, w_3)\}$, $V(p) = \{w_1\}$ and $V(q) = \{w_3\}$. Let $T = \{w_1, w_1\}$. See the picture below.

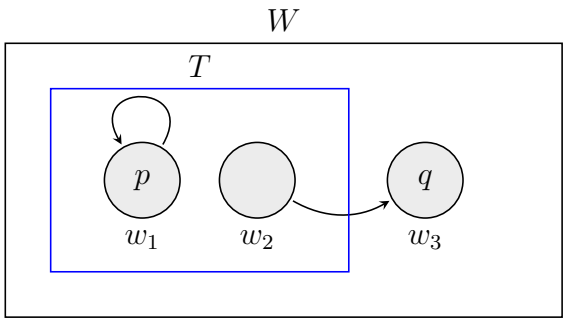

Example 2.5. We give an example of a Kripke model with a team T that has a successor team. Let $\Phi = \emptyset$, and let $K = (W, R, V)$ be a Kripke model with $W = \{w_1, w_2, w_3, w_4\}$, $R = \{(w_1, w_3), (w_1, w_4), (w_2, w_4)\}$, and V is the empty function. Let $T = \{w_1, w_2\}$, and let $S = \{w_4\}$, as illustrated in the picture below. Then $S \subseteq R[T]$, and $T \subseteq R^{-1}[S]$, hence TRS.

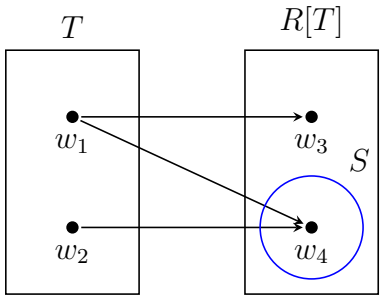

Let us next recall the team semantics for $\mathcal{ML}$. We will see in Proposition 2.10 that the team semantics is a natural generalization of the usual semantics for $\mathcal{ML}$.

Definition 2.6. The team semantics for $\mathcal{ML}$ are given by the following clauses:

$$\begin{aligned}
K, T \models p &\iff T \subseteq V(p). \\
K, T \models \bot &\iff T = \emptyset. \\
K, T \models \neg\alpha &\iff K, w \not\models \alpha \text{ for all } w \in T. \\
K, T \models \alpha \vee \beta &\iff K, T_1 \models \alpha \text{ and } K, T_2 \models \beta \text{ for some } T_1, T_2 \subseteq T \\
& \text{such that } T_1 \cup T_2 = T. \\
K, T \models \alpha \wedge \beta &\iff K, T \models \alpha \text{ and } K, T \models \beta. \\
K, T \models \Diamond\alpha &\iff K, S \models \alpha \text{ for some } S \text{ such that } TRS. \\
K, T \models \Box\alpha &\iff K, R[T] \models \alpha.
\end{aligned}$$

Next, we extend modal logic to *modal inclusion logic* by adding the inclusion atom. We use α and β to denote classical formulas.

Definition 2.7. Let Φ be a set of propositional symbols. The syntax for modal inclusion logic $\mathcal{MIL}(\Phi)$ is given by:

$$\phi := p \mid \bot \mid \neg\alpha \mid (\phi \vee \phi) \mid (\phi \wedge \phi) \mid \Diamond\phi \mid \Box\phi \mid \alpha_1 \ldots \alpha_n \subseteq \beta_1 \ldots \beta_n,$$

where $p \in \Phi$, $\alpha \in \mathcal{ML}$ and $\alpha_i, \beta_i \in \mathcal{ML}$ for all $i = 1, \ldots, n$.

Note that we do not allow nested inclusion atoms. For example, for propositional symbols p and q, $p \subseteq (p \subseteq q)$ is not a formula of $\mathcal{MIL}$. To avoid ambiguities in the interpretation of formulas with inclusion atoms, always interpret the classical formulas in the sequences of the inclusion atom to be as short as possible. For instance, the formula $q \wedge p \subseteq q$ has the subformula $p \subseteq q$.

To define the semantics for $\mathcal{MIL}$ we simply add a semantic clause for inclusion atoms to the semantics for $\mathcal{ML}$.

Definition 2.8. The semantics for $\mathcal{MIL}$ are defined by the semantics of $\mathcal{ML}$ together with the following clause:

$$K, T \models \alpha_1 \dots \alpha_n \subseteq \beta_1 \dots \beta_n \iff \forall w \in T\ \exists v \in T \text{ such that } (K, w \models \alpha_i \iff K, v \models \beta_i) \text{ for all } i = 1, \dots, n.$$

The satisfaction of the inclusion atom by a team can be understood as follows: Any combination of values that can be achieved in a state of the team for the formulas on the left, can also be achieved in some state in the team for the formulas on the right. Next we give an example of the inclusion atom.

Example 2.9. Let $\Phi = \{p, q, r, s\}$ and let $K = (W, R, V)$ be a Kripke model such that $W = \{u, v, w\}$, $R = \emptyset$, $V(p) = \emptyset$, $V(q) = \{u, v\}$, $V(r) = \{v\}$, and $V(s) = \{v, w\}$. Let $T = W$. The table below illustrates the team T in the evident way. Clearly, the sequence pq has in the team two different values $\bot\top$ and $\bot\bot$, which are both values for rs in the team. Thus, we have $K, T \models pq \subseteq rs$. On the other hand, the sequence rs has the value $\top\top$, which is not a value for pq, hence $K, T \not\models rs \subseteq pq$.

	p	q	r	s
u	$\bot$	$\top$	$\bot$	$\bot$
v	$\bot$	$\top$	$\top$	$\top$
w	$\bot$	$\bot$	$\bot$	$\top$

We say that ϕ and ψ are *semantically equivalent*, denoted by $\phi \equiv \psi$, if $\phi \models \psi$ and $\psi \models \phi$.

When the Kripke model is clear from the context, we sometimes suppress mention of it and write $T \models \phi$.

2.2 Properties of $\mathcal{ML}$ and $\mathcal{MIL}$

In this section, we recall the basic properties of $\mathcal{ML}$ and $\mathcal{MIL}$: $\mathcal{ML}$ has the flatness property, and $\mathcal{MIL}$ is closed under unions and has the empty team property. We provide detailed proofs for these properties (see also [18]).

First, we show that every formula α in $\mathcal{ML}$ is flat, i.e., a pair of a Kripke model with a team (K, T) satisfies α if and only if $(K, \{w\})$ satisfies α for every state $w \in T$. We also show the further property that for all $\mathcal{ML}$-formulas α, $K, T \models \alpha$ if and only if $K, w \models \alpha$ for all $w \in T$. This shows the way in which $\mathcal{MIL}$ extends classical modal logic, and is why we call $\mathcal{ML}$-formulas classical.

If all formulas in $\mathcal{L}$ have a property, we say that $\mathcal{L}$ itself has the property. Thus we show that $\mathcal{ML}$ is flat.

Proposition 2.10. *Let K be a Kripke model, T a team of K, and α an $\mathcal{ML}(\Phi)$-formula. Then*

$$\begin{aligned} K, T \models \alpha &\iff K, w \models \alpha \text{ for every } w \in T \\ &\iff K, \{w\} \models \alpha \text{ for every } w \in T. \end{aligned}$$

Proof. It clearly suffices to show the first equivalence, which we do by induction on the complexity of the formula $\alpha \in \mathcal{ML}(\Phi)$.

- Let $\alpha = p$, where $p \in \Phi$. Then $T \models p$ if and only if $T \subseteq V(p)$, which is the case if and only if $w \in V(p)$ for all $w \in T$, i.e., $w \models p$ for all $w \in T$.

- Let $\alpha = \bot$. Then $T \models \bot$ if and only $T = \emptyset$, which is the case if and only if $w \models \bot$ for all $w \in T$.

- Let $\alpha = \neg\beta$, where $\beta \in \mathcal{ML}(\Phi)$. By definition, $T \models \neg\beta$ if and only if $w \not\models \beta$ for all $w \in T$, which is equivalent to $w \models \neg\beta$ for all $w \in T$.

- Let $\alpha = \beta_1 \vee \beta_2$. Suppose that $T \models \beta_1 \vee \beta_2$. Then $T_1 \models \beta_1$ and $T_2 \models \beta_2$ for some $T_1, T_2 \subseteq T$ such that $T_1 \cup T_2 = T$. By the induction hypothesis, $w \models \beta_1$ for all $w \in T_1$ and $w \models \beta_2$ for all $w \in T_2$. For any $w \in T$, it is in T_1 or T_2, so $w \models \beta_1 \vee \beta_2$ for all $w \in T$.

  For the other direction, assume that $w \models \beta_1 \vee \beta_2$ for all $w \in T$. Let $T_1 = \{w \in T \mid w \models \beta_1\}$ and $T_2 = \{w \in T \mid w \models \beta_2\}$. Clearly $T_1, T_2 \subseteq T$ and $T_1 \cup T_2 = T$. By the induction hypothesis, $T_1 \models \beta_1$ and $T_2 \models \beta_2$. Hence $T \models \beta_1 \vee \beta_2$.

- Let $\alpha = \beta_1 \wedge \beta_2$. Then,

$$\begin{aligned} T \models \beta_1 \wedge \beta_2 &\iff T \models \beta_1 \text{ and } T \models \beta_2 \\ &\iff \forall w \in T: \ w \models \beta_1 \text{ and } w \models \beta_2 \quad \text{(by induction hypothesis)} \\ &\iff \forall w \in T: \ w \models \beta_1 \wedge \beta_2. \end{aligned}$$

- Let $\alpha = \Diamond\beta$. Suppose that $T \models \Diamond\beta$. Then $S \models \beta$ for some S such that TRS. By the induction hypothesis, $v \models \beta$ for all $v \in S$. Since S is such that TRS, for each $w \in T$, there is a $v \in S$ such that wRv and $v \models \beta$, i.e., $w \models \Diamond\beta$ for all $w \in T$.

  For the other direction, assume that $w \models \Diamond\beta$ for all $w \in T$. Then for all $w \in T$ there is a v such that wRv and $v \models \beta$. Let $S = \{v \mid v \models \beta \text{ and } \exists w \in T \text{ s.t. } wRv\}$, then $T \subseteq R^{-1}[S]$ and by the definition of S, $S \subseteq R[T]$. Then S is such that TRS, and by the induction hypothesis $S \models \beta$. Hence $T \models \Diamond\beta$.

- Let $\alpha = \Box\beta$. Then,

$$\begin{aligned} T \models \Box\beta &\iff R[T] \models \beta \\ &\iff \forall v \in R[T] : \ v \models \beta && \text{(by induction hypothesis)} \\ &\iff \forall w \in T : \ v \models \beta \text{ whenever } wRv \\ &\iff \forall w \in T : \ w \models \Box\beta. \end{aligned}$$

□

Since a singleton team satisfies a $\mathcal{ML}$-formula if and only if the state in the team satisfies the formula, we will write $K, w \models \alpha$ instead of $K, \{w\} \models \alpha$ also in the team semantics setting.

Corollary 2.11. *Let $\Gamma \cup \{\alpha\}$ consist of $\mathcal{ML}$-formulas, then*

$$\Gamma \models \alpha \text{ (over teams)} \iff \Gamma \models \alpha \text{ (over states)}.$$

Proof. Suppose that $\Gamma \models \alpha$ (over teams) and let $w \models \gamma$ for all $\gamma \in \Gamma$. By Proposition 2.10 it follows that $\{w\} \models \gamma$ for all $\gamma \in \Gamma$. By the assumption we now have that $\{w\} \models \alpha$, from which it follows by Proposition 2.10 that $w \models \alpha$.

For the other direction, suppose that $\Gamma \models \alpha$ (over states) and let $T \models \gamma$ for all $\gamma \in \Gamma$. By Proposition 2.10 we have that $w \models \gamma$ for all $\gamma \in \Gamma$ and for all $w \in T$. By assumption it follows that $w \models \alpha$ for all $w \in T$, from which it follows by Proposition 2.10 that $T \models \alpha$. □

Let $\mathcal{L}$ be a logic and let $\alpha \in \mathcal{L}$. We say that α

- is *downwards closed*, if $K, T \models \alpha$ implies that $K, T' \models \alpha$ for all $T' \subseteq T$,

- is *closed under unions*, if $K, T_i \models \alpha$ for all i in a nonempty index set I, implies that $K, \bigcup_{i \in I} T_i \models \alpha$. In other words, a formula is closed under unions if any number of teams individually satisfying a formula implies that their union satisfies the formula.

- has the *empty team property*, if $K, \emptyset \models \alpha$.

Next we show that the flatness property is equivalent to the combination of the downwards closure property, union closure property and the empty team property.

Proposition 2.12. *Let $\mathcal{L}$ be a logic. A formula $\alpha \in \mathcal{L}$ has the flatness property if and only if the formula α*

(i) is downwards closed,

(ii) is union closed, and

(iii) has the empty team property.

Proof. Let $\alpha \in \mathcal{L}$ and let T be team of a Kripke model K. First, suppose that α has the flatness property. We show that the three properties hold.

(i) Suppose that $T \models \alpha$. By flatness $\{w\} \models \alpha$ for all $w \in T$. Let $T' \subseteq T$. Then for any $w \in T'$, w is also in T, so $\{w\} \models \alpha$ for all $w \in T'$. We use flatness again to conclude $T' \models \alpha$.

(ii) Suppose that $T_i \models \alpha$ for all $i \in I$, where I is nonempty. Let $T = \bigcup_{i \in I} T_i$, and let $w \in T$. Then w is in T_i for some $i \in I$, so by flatness $\{w\} \models \alpha$. We use flatness again to conclude that $T \models \alpha$.

(iii) The statement $\{w\} \models \alpha$ for all $w \in \emptyset$ is vacuously true. By flatness we conclude $\emptyset \models \alpha$.

For the other direction, suppose that α is downwards closed, union closed, and has the empty team property. If $T = \emptyset$, then the left-hand side of the flatness definition is satisfied by the empty team property, and the right-hand side is vacuously true. Suppose that $T \neq \emptyset$. If $T \models \alpha$, then by the downwards closure property it follows that $\{w\} \models \alpha$ for all $w \in T$. Conversely, if $\{w\} \models \alpha$ for all $w \in T$, it follows by the union closure property that $T \models \alpha$. □

Consequently, a logic $\mathcal{L}$ has the flatness property if and only if the logic is downwards closed, union closed, and has the empty team property.

Corollary 2.13. *$\mathcal{ML}$ has the downwards closure, union closure and the empty team property.*

Proof. Follows from Proposition 2.10 and Proposition 2.12. □

Next we show that $\mathcal{MIL}$ also has the union closure property and the empty team property. On the other hand, due to the addition of inclusion atoms, $\mathcal{MIL}$ does not have the downwards closure property.

Proposition 2.14. *$\mathcal{MIL}$ is union closed, i.e., for each $\phi \in \mathcal{MIL}(\Phi)$, and nonempty index set I,*

$$\textit{if} \quad K, T_i \models \phi \quad \textit{for all} \quad i \in I, \quad \textit{then} \quad K, T \models \phi,$$

where $T = \bigcup_{i \in I} T_i$.

Proof. We do the proof by structural induction on $\phi \in \mathcal{MIL}(\Phi)$. Let $T = \bigcup_{i \in I} T_i$.

- If $\phi = p$, $\phi = \bot$ or $\phi = \neg\alpha$, then $\phi \in \mathcal{ML}$, hence ϕ is union closed by Corollary 2.13.
- Let $\phi = \psi_1 \vee \psi_2$, and suppose that $T_i \models \psi_1 \vee \psi_2$ for all $i \in I$. Then for each $i \in I$, $T_{i_1} \models \psi_1$ and $T_{i_2} \models \psi_2$ for some $T_{i_1}, T_{i_2} \subseteq T_i$ such that $T_{i_1} \cup T_{i_2} = T_i$. By the induction hypothesis $\bigcup_{i \in I} T_{i_1} \models \psi_1$ and $\bigcup_{i \in I} T_{i_2} \models \psi_2$. Now $\bigcup_{i \in I} T_{i_1}, \bigcup_{i \in I} T_{i_2} \subseteq T$ and $\bigcup_{i \in I} T_{i_1} \cup \bigcup_{i \in I} T_{i_2} = T$. So $T \models \psi_1 \vee \psi_2$.
- Let $\phi = \psi_1 \wedge \psi_2$, and suppose that $T_i \models \psi_1 \wedge \psi_2$ for all $i \in I$. Then $T_i \models \psi_1$ and $T_i \models \psi_2$, for all $i \in I$. By the induction hypothesis, $T \models \psi_1$ and $T \models \psi_2$, hence $T \models \psi_1 \wedge \psi_2$.
- Let $\phi = \Diamond\psi$, and suppose that $T_i \models \Diamond\psi$ for all $i \in I$. Then for each $i \in I$, there is a team such that $S_i \models \psi$ and TRS_i. By the induction hypothesis, $\bigcup_{i \in I} S_i \models \psi$. Also, $\bigcup_{i \in I} S_i \subseteq R[T]$ and $T \subseteq R^{-1}[\bigcup_{i \in I} S_i]$, hence $TR\bigcup_{i \in I} S_i$. So $T \models \Diamond\psi$.
- Let $\phi = \Box\psi$, and suppose that $T_i \models \Box\psi$ for all $i \in I$. Then for each $i \in I$, $R[T_i] \models \psi$. By the induction hypothesis, $\bigcup_{i \in I} R[T_i] \models \psi$. Since $\bigcup_{i \in I} R[T_i] = R[\bigcup_{i \in I} T_i]$, it follows that $T \models \Box\phi$.
- Let $\phi = \alpha_1 \ldots \alpha_n \subseteq \beta_1 \ldots \beta_n$, and suppose that $T_i \models \phi$ for all $i \in I$. Let $w \in T$. Then $w \in T_i$ for some $i \in I$, so there is a $v \in T_i \subseteq T$, such that $w \models \alpha_k \iff v \models \beta_k$ for all $k = 1, \ldots, n$. So $T \models \phi$ holds.

$\Box$

Proposition 2.15. *$\mathcal{MIL}$ has the empty team property, i.e.,*

$$K, \emptyset \models \phi \quad \textit{for all} \quad \phi \in \mathcal{MIL}(\Phi).$$

Proof. The proof is by structural induction on $\phi \in \mathcal{MIL}(\Phi)$.

- If $\phi = p$, $\phi = \bot$ or $\phi = \neg\alpha$, then $\phi \in \mathcal{ML}$, hence ϕ has the empty team property by Corollary 2.13.
- Let $\phi = \psi_1 \vee \psi_2$. By the induction hypothesis, $\emptyset \models \psi_1$ and $\emptyset \models \psi_2$. Clearly $\emptyset \subseteq \emptyset$ and $\emptyset \cup \emptyset = \emptyset$. Hence $\emptyset \models \psi_1 \vee \psi_2$.
- Let $\phi = \psi_1 \wedge \psi_2$. By the induction hypothesis, $\emptyset \models \psi_1$ and $\emptyset \models \psi_2$, so $\emptyset \models \psi_1 \wedge \psi_2$.
- Let $\phi = \Diamond\psi$. $T \models \Diamond\psi$. By the induction hypothesis, $\emptyset \models \psi$. Clearly $\emptyset R \emptyset$, so $\emptyset \models \Diamond\psi$.
- Let $\phi = \Box\psi$. Clearly $R[\emptyset] = \emptyset$, so by the induction hypothesis $R[\emptyset] \models \psi$, hence $\emptyset \models \Box\psi$.
- Let $\phi = \alpha_1 \dots \alpha_n \subseteq \beta_1 \dots \beta_n$. For the empty team, the semantic clause for the inclusion atom is vacuously true. Hence $\emptyset \models \phi$.

$\Box$

Example 2.16. We illustrate that $\mathcal{MIL}$ is not closed downwards in the following example. Let $\Phi = \{p, q\}$ and let $K = (W, R, V)$ be a Kripke model with $W = \{w_1, w_2\}$, $R = \emptyset$, $V(p) = \{w_1\}$ and $V(q) = \{w_2\}$. Let $T = W$ (see the picture below). Clearly, for all $w \in T$ there is a $v \in T$ such that $w \models p \iff v \models q$, so $T \models p \subseteq q$. But for $\{w_1\} \subseteq T$, there is no $v \in \{w_1\}$ such that $w_1 \models p \iff v \models q$. Hence $\{w_1\} \not\models p \subseteq q$.

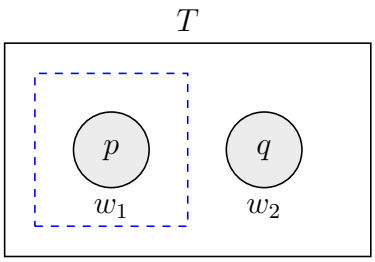

Since $\mathcal{MIL}$ is not downwards closed, it follows from Proposition 2.12 that $\mathcal{MIL}$ does not have the flatness property.

We also show that $\mathcal{MIL}$ does not admit the uniform substitution property. A logic $\mathcal{L}$ admits the uniform substitution property if for all formulas $\phi_1, \phi_2, \psi \in \mathcal{L}$,

$$\phi_1 \models \phi_2 \iff \phi_1(\psi/p) \models \phi_2(\psi/p),$$

where, $\phi_i(\psi/p)$ is obtained by substituting all instances of p in ϕ_i with ψ, for $i \in \{1, 2\}$.

Proposition 2.17. *$\mathcal{MIL}$ does not admit the uniform substitution property.*

Proof. Let p, q and r be propositional symbols. Clearly $(p \vee q) \wedge r \models (p \wedge r) \vee (q \wedge r)$ holds. But when we substitute $p \subseteq q$ for r on both sides, we get $(p \vee q) \wedge p \subseteq q \models (p \wedge p \subseteq q) \vee (q \wedge p \subseteq q)$, which does not hold. For a counterexample to the entailment, see Example 2.16. Clearly $T \models (p \vee q) \wedge p \subseteq q$, but there are no subteams $T_1, T_2 \subseteq T$ such that $T_1 \cup T_2 = T$ with $T_1 \models p \wedge p \subseteq q$ and $T_2 \models q \wedge p \subseteq q$. $\square$

Chapter 3

Expressive completeness and normal form

In this chapter we recall the definitions of Hintikka formulas and k-bisimulation, with the goal of showing that $\mathcal{MIL}$ is expressively complete. As a consequence, we obtain the normal form for formulas in $\mathcal{MIL}$. The chapter is divided into three sections. In the first section, we recall the definitions of Hintikka formulas and k-bisimulation for both states and teams, and show that modal inclusion logic is invariant under bisimulation. In the second section, we prove that $\mathcal{MIL}$ is expressively complete, and obtain the normal form for the logic. In the third section, we revisit inclusion atoms. We show that an arbitrary inclusion atom can be reduced to a formula with inclusion atoms only of the type $\top \subseteq \alpha$. The results included in this chapter are either standard (see, e.g., [12, 3]) or due to [18].

3.1 Hintikka formulas and k-bisimulation

In this section we present Hintikka formulas, and k-bisimulation both for states and teams. We show that the following are equivalent for the Kripke models with states (K, w) and (K', w'):

- (K, w) are (K', w') are k-bisimilar.
- (K, w) and (K', w') cannot be distinguished by a formula with less than $k+1$ nested modal operators.
- (K, w) satisfies the k-th Hintikka formula of (K', w').

Thus Hintikka formulas capture (state) k-bisimulation. We conclude the section by proving the bisimulation invariance theorem for $\mathcal{MIL}$.

Definition 3.1. Let Φ be a finite set of propositional symbols and K a Kripke model over Φ. If $w \in W$, then (K, w) is called a pointed Φ-model. Similarly, a Φ-model with a team is a pair (K, T), where T is a team of K.

Next we define (state) *k-bisimulation*, which is a relation between two pointed Φ-models that is satisfied if the models are similar, in the sense that their states satisfy the same propositional symbols and have similar accessibility relations up to degree k.

Definition 3.2. The k-bisimulation relation between the pointed Φ-models (K, w) and (K', w'), written as $K, w \leftrightarrows_k K', w'$, is defined recursively by:

(i) $K, w \leftrightarrows_0 K', w'$ if and only if the equivalence $K, w \models p \iff K', w' \models p$ holds for all $p \in \Phi$.

(ii) $K, w \leftrightarrows_{k+1} K', w'$ if and only if $K, w \leftrightarrows_0 K', w'$ and the following conditions are satisfied (see also Figure 3.1):

(Forth condition) For every state v of K with wRv there is a state v' of K' with $w'Rv'$ such that $K, v \leftrightarrows_k K', v'$.

(Back condition) For every state v' of K' with $w'Rv'$ there is a state v of K with wRv such that $K, v \leftrightarrows_k K', v'$.

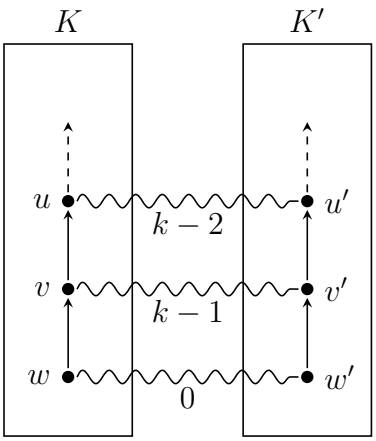

Figure 3.1: State k-bisimulation illustrated. The figure illustrates $K, w \leftrightarrows_k K', w'$. The lowest zigzag line represent zero-bisimulation, the second lowest represents $k-1$-bisimulation, followed by $k-2$-bisimulation etc.

We write $K, w \not\leftrightarrows_k K', w'$ if (K, w) and (K', w') are not k-bisimilar. Clearly, the k-bisimulation relation is symmetrical, reflexive and transitive, and is thus an equivalence

relation. It also follows from the definition of k-bisimulation that if two pointed Φ-models are k-bisimilar, then they are also n-bisimilar for all $n \leq k$.

Lemma 3.3. *Let (K, w) and (K', w') be pointed Φ-models and let $k \in \mathbb{N}$. If $K, w \leftrightarrows_k K', w'$, then $K, w \leftrightarrows_n K', w'$ for all $n \leq k$.*

Proof. For each $k \in \mathbb{N}$, when $n = k$ the result is trivial. It suffices to show that $K, w \leftrightarrows_k K', w'$ implies $K, w \leftrightarrows_{k-1} K', w'$ by induction on $k \geq 1$. For the basic case $k = 1$, we have that $K, w \leftrightarrows_1 K', w'$ implies $K, w \leftrightarrows_0 K', w'$ by the definition of k-bisimulation.

Suppose that $k \geq 1$ and $K, w \leftrightarrows_k K', w'$. We show the forth condition of $k-1$-bisimulation: For every state v of K with wRv, there exists a state v' of K' with $w'Rv'$ such that $K, v \leftrightarrows_{k-2} K', v'$. By the assumption $K, w \leftrightarrows_k K', w'$, we have that for every state v of K with wRv there exists a state v' of K' with $w'Rv'$ such that $K, v \leftrightarrows_{k-1} K', v'$. By the induction hypothesis, $K, v \leftrightarrows_{k-1} K', v'$ implies that $K, v \leftrightarrows_{k-2} K', v'$. The back condition is proved similarly. We conclude $K, w \leftrightarrows_{k-1} K', w'$. $\square$

The *modal depth* of an $\mathcal{MIL}$-formula describes the number of nested modal operators within the formula.

Definition 3.4. The modal depth of a formula $\phi \in \mathcal{MIL}(\Phi)$, $\mathrm{md}(\phi)$, is defined by the following clauses:

$$\begin{aligned}
\mathrm{md}(p) &= \mathrm{md}(\bot) = 0, \\
\mathrm{md}(\neg\alpha) &= \mathrm{md}(\alpha), \\
\mathrm{md}(\psi_1 \vee \psi_2) &= \mathrm{md}(\psi_1 \wedge \psi_2) = \max\{\mathrm{md}(\psi_1), \mathrm{md}(\psi_2)\}, \\
\mathrm{md}(\Diamond\psi) &= \mathrm{md}(\Box\psi) = \mathrm{md}(\psi) + 1, \text{ and} \\
\mathrm{md}(\alpha_1 \ldots \alpha_n \subseteq \beta_1 \ldots \beta_n) &= \max\{\mathrm{md}(\alpha_1), \ldots \mathrm{md}(\alpha_n), \mathrm{md}(\beta_1) \ldots \mathrm{md}(\beta_n)\}.
\end{aligned}$$

The modal depth of an $\mathcal{ML}$-formula is defined by Definition 3.4 restricted to $\mathcal{ML}$-formulas. We say that two pointed Φ-models are *k-equivalent* if they satisfy the same $\mathcal{ML}$-formulas up to modal depth k.

Definition 3.5. The models (K, w) and (K', w') are k-equivalent, written as $K, w \equiv_k K', w'$, if for every $\alpha \in \mathcal{ML}(\Phi)$ with $\mathrm{md}(\alpha) \leq k$,

$$K, w \models \alpha \iff K', w' \models \alpha.$$

For an index set $I = \{1, \ldots, n\}$, we write $\bigvee_{i \in I} \phi_i$ as an abbreviation of the formula $(\phi_1 \vee \cdots \vee \phi_n)$ and define $\bigvee_{i \in \emptyset} \phi_i = \bigvee \emptyset = \bot$. Similarly, we abbreviate $(\phi_1 \wedge \cdots \wedge \phi_n)$ as $\bigwedge_{i \in I} \phi_i$ and define $\bigwedge_{i \in \emptyset} \phi_i = \bigwedge \emptyset = \neg\bot$.

Next we give the definition of *Hintikka formulas*.

Definition 3.6. Assume that Φ is a finite set of propositional symbols. Let $k \in \mathbb{N}$ and let (K, w) be a pointed Φ-model. The k:th Hintikka formula $\chi^k_{K,w}$ of (K, w) is defined recursively by:

$$\chi^0_{K,w} := \bigwedge\{p \mid p \in \Phi \text{ and } w \in V(p)\} \wedge \bigwedge\{\neg p \mid p \in \Phi \text{ and } w \notin V(p)\}$$

$$\chi^{k+1}_{K,w} := \chi^k_{K,w} \wedge \bigwedge_{v \in R[w]} \Diamond \chi^k_{K,v} \wedge \Box \bigvee_{v \in R[w]} \chi^k_{K,v}.$$

It is clear from the definition of Hintikka formulas that a k:th Hintikka formula has modal depth at most k. Another direct consequence of the definition is that there are only finitely many non-equivalent k:th Hintikka formulas for a finite set of propositional symbols.

Corollary 3.7. *Let Φ be a finite set of propositional symbols. Then there are only finitely many non-equivalent k:th Hintikka formulas over Φ-models.*

Proof. Let the size of Φ be n. We prove the claim by induction on k. A 0:th Hintikka formula is a conjunction between propositional symbols, negated or not, from a finite set Φ. So there are 2^n non-equivalent 0:th Hintikka formulas. Suppose that there are $m \in \mathbb{N}$ many k:th Hintikka formulas. By the definition of a $(k+1)$:th Hintikka formula, we have at most $m \cdot 2^m \cdot 2^m$ many non-equivalent options, which again is finite. $\Box$

For any pointed Φ-model (K, w) and $k \in \mathbb{N}$, the Hintikka formula $\chi^k_{K,w}$ characterises (K, w) up to k-equivalence. In addition, Hintikka formulas also capture k-bisimulation.

Theorem 3.8. *Let Φ be a finite set of propositional symbols and let $k \in \mathbb{N}$. For pointed Φ-models (K, w) and (K', w'), we have that:*

$$K, w \equiv_k K', w' \iff K, w \leftrightarrows_k K', w' \iff K', w' \models \chi^k_{K,w}.$$

To prove Theorem 3.8, we use *k-bisimulation games*. The definition of k-bisimulation games and the proof of Theorem 3.8 is due to [12].

Let (K, w) and (K', w') be pointed Φ-models. A bisimulation game is played by two players that we call I (challenger) and II (defender). The game starts at the initial configuration $(K, w; K', w')$, we say that at this stage there is one pebble placed on the state w in K and one pebble placed on the state w' in K'. Each round consists of player I moving one pebble in one of the models from its current state to an accessible state in that model. Then player II acts similarly in the other model.

Player I loses if none of the current states has an accessible state. Player II loses if they cannot move the pebble, or if the new configuration $(K, v; K', v')$ is such that it is not the case that $K, v \models p \iff K', v' \models p$ for all $p \in \Phi$.

We say that player II has a *winning stategy* in the k-bisimulation game, if from the initial configuration $(K, w; K', w')$, player II can respond without losing for k-many rounds, no matter what moves player I makes.

We make the connection between k-bisimulation and the k-bisimulation game through the following observations:

- The back condition of k-bisimulation is satisfied if and only if player II can respond in the model K to player I's move without losing.
- The forth condition of k-bisimulation is satisfied if and only if player II can respond in the model K' to player I's move without losing.
- Zero-bisimulation corresponds to player II not having lost already at the initial configuration.

This motivates the following equivalence: Let $k \in \mathbb{N}$. The pointed Φ-models (K, w) and (K', w') are k-bisimilar if and only if player II has a winning strategy in the k-bisimulation game with the initial configuration $(K, w; K', w')$. This equivalence together with the Lemmas 3.9, 3.10 and 3.11, prove Theorem 3.8.

Lemma 3.9. *Let Φ be a finite set of propositional symbols and let $k \in \mathbb{N}$. If player II has a winning strategy in the k-round bisimulation game $\mathcal{G}$ with the initial configuration $(K, w; K', w')$, then $K, w \equiv_k K', w'$.*

Proof. Suppose that (K, w) and (K', w') are not k-equivalent. Then there is a formula $\alpha \in \mathcal{ML}(\Phi)$ with modal depth $n \leq k$ such that $w \models \alpha$ and $w' \models \neg\alpha$. We prove by induction on the modal depth of α that II does not have a winning strategy in the k-bisimulation game $\mathcal{G}$.

Let $n = 0$, then (K, w) and (K', w') do not agree on some $p \in \Phi$, hence II loses. Suppose that $\mathrm{md}(\alpha) = n + 1$, $w \models \alpha$ and $w' \models \neg\alpha$. Without loss of generality, we can assume that the models (K, w) and (K', w') do not agree on some diamond-formula. In other words, there exists a formula $\beta \in \mathcal{ML}(\Phi)$ with modal depth $n+1$ such that $w \models \Diamond\beta$ and $w' \models \neg\Diamond\beta$. Now player I can move the pebble in the model K to some accessible state u such that $u \models \beta$, and player II must respond in K' and move the pebble to some u', lest player II loses immediately. The current state becomes $(K, u; K', u')$, with $u \models \beta$ and $u' \models \neg\beta$. Since the modal depth of β is n, we can apply the induction hypothesis and conclude that II loses. □

Lemma 3.10. *Let $k \in \mathbb{N}$. If $K, w \equiv_k K', w'$ then $K', w' \models \chi^k_{K,w}$.*

Proof. It is easy to see that $K, w \models \chi^k_{K,w}$ and that the modal depth of $\chi^k_{K,w}$ is less than or equal to k. Therefore the assumption $K, w \equiv_k K', w'$ implies that $K', w' \models \chi^k_{K,w}$. □

Lemma 3.11. *Let $k \in \mathbb{N}$. If $K', w' \models \chi^k_{K,w}$ then player II has a winning strategy in the k-round bisimulation game $\mathcal{G}$ with the initial configuration $(K, w; K', w')$.*

Proof. The proof is done by induction on $k \in \mathbb{N}$. Suppose that $w' \models \chi^0_{K,w}$, then it is clear that player II has not lost already at the initial configuration.

Suppose that $w' \models \chi^k_{K,w}$ implies that player II has a winning strategy for k rounds. Let us show that player II has a winning move at round $k+1$. We recall that the formula $\chi^{k+1}_{K,w}$ is defined as

$$\chi^{k+1}_{K,w} := \chi^k_{K,w} \wedge \bigwedge_{v \in R[w]} \Diamond \chi^k_{K,v} \wedge \Box \bigvee_{v \in R[w]} \chi^k_{K,v}.$$

Suppose that $w' \models \chi^{k+1}_{K,w}$. Then $w' \models \bigwedge_{v \in R[w]} \Diamond \chi^k_{K,v}$, so for any accessible state v of w in K that player I moves to, we have that $w' \models \Diamond \chi^k_{K,v}$. So there is some accessible state v' to w' in K' such that $v' \models \chi^k_{K,v}$, which guarantees a winning strategy for II by the induction hypothesis.

Also, $w' \models \Box \bigvee_{v \in R[w]} \chi^k_{K,v}$. So for any accessible state v' of w' in K' that player I moves to, $v' \models \chi^k_{K,v}$ holds for some accessible v of w in K, which guarantees a winning strategy for II by the induction hypothesis. $\Box$

Now we define k-bisimulation also in the team setting. The definition and remaining results in this subsection are due to [18]. The definition of team k-bisimulation was first introduced in [17], as a natural extension of state k-bisimulation.

We denote by $\mathcal{CT}(\Phi)$ the class of all Φ-models with teams.

Definition 3.12. Let $(K, T), (K', T') \in \mathcal{CT}(\Phi)$ and $k \in \mathbb{N}$. (K, T) and (K', T') are (team) k-bisimilar, written as $K, T \leftrightarrows_k K', T'$, if the following back and forth conditions hold:

(F_k) For every $w \in T$ there exists a $w' \in T'$ such that $K, w \leftrightarrows_k K', w'$.

(B_k) For every $w' \in T'$ there exists a $w \in T$ such that $K, w \leftrightarrows_k K', w'$.

We write $K, T \not\leftrightarrows_k K', T'$ if (K, T) and (K', T') are not k-bisimilar. We say that (K, T) and (K', T') are (team) *bisimilar*, written as $K, T \leftrightarrows K', T'$, if $K, T \leftrightarrows_k K', T'$ for all $k \in \mathbb{N}$.

Next we give an example of team k-bisimulation.

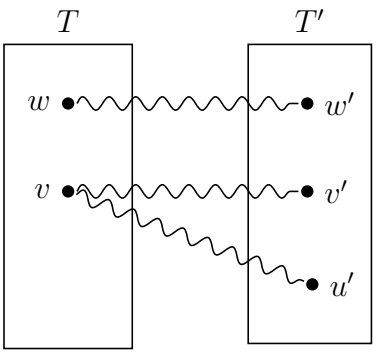

Figure 3.2: Team k-bisimulation illustrated. The figure illustrates $K, T \leftrightarrows_k K', T'$, and the zigzag lines represent state k-bisimulation.

Example 3.13. Let $K = (W, R, V)$ and $K' = (W', R', V')$ be Kripke models with $W = \{w, v\}$, $W' = \{w', v', u'\}$, $R = \{(w, v), (v, v)\}$ and $R' = \{(w', v'), (v', u')\}$. Further, let Φ be a set of propositional symbols, and let V and V' be such that $K, v \leftrightarrows_0 K', v'$, and $K, v \leftrightarrows_0 K', u'$, illustrated by the zigzag lines in the figure below. Let $T = \{w, v\}$ and $T' = \{w', v'\}$. Now $K, v \leftrightarrows_1 K', v'$, and $K, w \leftrightarrows_1 K', w'$, hence $K, T \leftrightarrows_1 K', T'$.

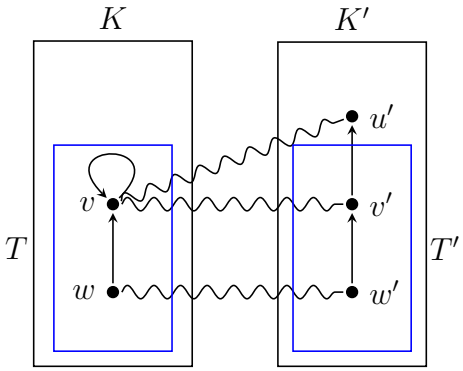

Similarly to the case of state k-bisimulation, if two Φ-models with teams are k-bisimilar, then they are also n-bisimilar for all $n \leq k$.

Lemma 3.14. *Let $(K, T), (K', T') \in \mathcal{CT}(\Phi)$ and $k \in \mathbb{N}$. If $K, T \leftrightarrows_k K', T'$, then $K, T \leftrightarrows_n K', T'$ for all $n \leq k$.*

Proof. For each $k \in \mathbb{N}$, when $n = k$ the result is trivial. It suffices to show that $K, T \leftrightarrows_k K', T'$ implies $K, T \leftrightarrows_{k-1} K', T'$ for all $k \geq 1$.

Suppose that $K, T \leftrightarrows_k K', T'$. Then for every $w \in T$ there exists a $w' \in T$ such that $K, w \leftrightarrows_k K', w'$, and for every $w' \in T$ there exists a $w \in T$ such that $K, w \leftrightarrows_k K', w'$.

By Lemma 3.3, $K, w \leftrightarrows_k K', w'$ implies $K, w \leftrightarrows_{k-1} K', w'$. Therefore, by the definition of team k-bisimulation we conclude $K, T \leftrightarrows_{k-1} K', T'$. $\square$

The results in the next lemma are also consequences of the definition of team k-bisimulation.

Lemma 3.15. *Let $(K, T), (K', T') \in \mathcal{CT}(\Phi)$ be such that $K, T \leftrightarrows_{k+1} K', T'$ and let $k \in \mathbb{N}$. Then*

(i) For every S such that TRS, there is a S' such that $T'R'S'$ and $K, S \leftrightarrows_k K', S'$.

(ii) $K, R[T] \leftrightarrows_k K', R'[T']$.

(iii) For all $T_1, T_2 \subseteq T$ such that $T_1 \cup T_2 = T$ there are $T'_1, T'_2 \subseteq T'$ such that $T'_1 \cup T'_2 = T'$ and $K, T_i \leftrightarrows_{k+1} K', T'_i$ for $i \in \{1, 2\}$.

Proof. Let $(K, T), (K', T')$ and k be as in the lemma.

(i) Let S be such that TRS. Define S' by

$$S' = \{v' \in R'[T'] \mid \exists v \in S : K, v \leftrightarrows_k K', v'\}.$$

Let us first prove that S' satisfies $T'R'S'$. By the definition of S', it is clear that for all $v' \in S'$ there is a $w' \in T'$ such that $w'R'v'$.

Let $w' \in T'$. We want to show that there is a $v' \in S'$ such that $w'R'v'$. Since $K, T \leftrightarrows_{k+1} K', T'$, there is a $w \in T$ such that $K, w \leftrightarrows_{k+1} K', w'$. Also, since TRS, there is a $v \in S$ such that wRv. So by the definition of k-bisimulation, there is a $v \in R'[w']$ such that $K, v \leftrightarrows_k K', v'$. It follows that $v' \in S'$. Thus $T'R'S'$.

By the definition of S', for all $v' \in S'$ there is a $v \in S$ such that $K, v \leftrightarrows_k K', v'$. So the back condition holds. We now prove that the forth condition holds. Let $v \in S$, then there is some $w \in T$ such that wRv. By $K, T \leftrightarrows_{k+1} K', T'$, there is a $w' \in T'$ such that $K, w \leftrightarrows_{k+1} K', w'$. By the definition of k-bisimulation, there is a $v' \in K'$ such that $w'R'v'$ and $K, v \leftrightarrows_k K', v'$. Clearly $v' \in S'$. Hence for all $v \in S$ there is a $v' \in S'$ such that $K, v \leftrightarrows_k K', v'$. We conclude that $K, S \leftrightarrows_k K', S'$.

(ii) The assumption $K, T \leftrightarrows_{k+1} K', T'$ implies that for all $w \in T$ there exists a $w' \in T'$ such that $K, w \leftrightarrows_{k+1} K', w'$. So for all $v \in R[T]$ there exists a $v' \in R'[T']$ such that $K, v \leftrightarrows_k K', v'$. Hence the forth condition is met, the back condition is proved similarly.

(iii) Let $T_1, T_2 \subseteq T$ be such that $T_1 \cup T_2 = T$. Define $T'_i = \{w' \in T' \mid \exists w \in T_i$ such that $K, w \leftrightarrows_{k+1} K', w'\}$, for $i \in \{1, 2\}$. Clearly, $T'_1, T'_2 \subseteq T'$. Let $w' \in T'$. Since $K, T \leftrightarrows_{k+1} K', T'$, there exists a $w \in T$ such that $K, w \leftrightarrows_{k+1} K', w'$. And $w \in T_i$ for some $i \in \{1, 2\}$, so $w' \in T'_i$ for some $i \in \{1, 2\}$, i.e., $w' \in T'_1 \cup T'_2$. Hence $T'_1 \cup T'_2 = T'$.

Let $i \in \{1, 2\}$. It is immediate by the definition of T'_i that for all $w' \in T'_i$ there exists a $w \in T_i$ such that $K, w \leftrightarrows_{k+1} K', w'$, so the back condition of k-bisimulation holds.

Let $w \in T_i$, then $w \in T$. By the assumption $K, T \leftrightarrows_{k+1} K', T'$, there is a $w' \in T'$ such that $K, w \leftrightarrows_{k+1} K', w'$. By the definition of T_i, it follows that $w' \in T'_i$. Hence the forth condition of k-bisimulation holds. We conclude that $K, T_i \leftrightarrows_{k+1} K', T'_i$.

□

Definition 3.16. Two pairs $(K, T), (K', T') \in \mathcal{CT}(\Phi)$ are *k-equivalent*, written as $K, T \equiv_k K', T'$, if for every $\phi \in \mathcal{MIL}(\Phi)$ with $\mathrm{md}(\phi) \leq k$,

$$K, T \models \phi \iff K', T' \models \phi.$$

Furthermore, (K, T) and (K', T') are *equivalent*, written as $K, T \equiv K', T'$, if $K, T \equiv_k K', T'$ for all $k \in \mathbb{N}$.

Next we show the bisimulation invariance theorem for $\mathcal{MIL}$: if two models with teams are (team) bisimilar, then they are equivalent.

Theorem 3.17 (Bisimulation invariance theorem)**.** *Let $(K, T), (K', T') \in \mathcal{CT}(\Phi)$ and $k \in \mathbb{N}$. If $K, T \leftrightarrows_k K', T'$, then $K, T \equiv_k K', T'$. Therefore, if $K, T \leftrightarrows K', T'$, then $K, T \equiv K', T'$.*

Proof. Let $\phi \in \mathcal{MIL}(\Phi)$. It suffices to show that if $K, T \leftrightarrows_k K', T'$, where $k = \mathrm{md}(\phi)$, then $K, T \models \phi$ if and only if $K', T' \models \phi$. The proof is done by structural induction on ϕ.

- Let $\phi = p$, where $p \in \Phi$. Assume that $T \models p$ and $K, T \leftrightarrows_k K', T'$, where $k = \mathrm{md}(\phi) = 0$. By definition $w \models p$ for all $w \in T$. And by the definition of k-bisimulation, for all $w' \in T'$ there exists a $w \in T$ such that $K, w \leftrightarrows_0 K', w'$. So $w' \models p$ for all $w' \in T'$. Now $T' \models \phi$ follows by definition.

- Let $\phi = \bot$ and assume that $T \models \bot$ and $K, T \leftrightarrows_k K', T'$, where $k = \mathrm{md}(\phi) = 0$. Then $T = \emptyset$ and by k-bisimulation it follows that $T' = \emptyset$. Hence $K', T' \models \bot$.

- Let $\phi = \neg\alpha$, where $\alpha \in \mathcal{ML}(\Phi)$. Assume that $T \models \neg\alpha$ and $K, T \leftrightarrows_k K', T'$, where $k = \mathrm{md}(\phi)$. Then $w \not\models \alpha$ for all $w \in T$, and for each $w' \in T'$ there exists a $w \in T$ such that $K, w \leftrightarrows_k K', w'$. By Theorem 3.8, $K, w \equiv_k K', w'$, and since $\mathrm{md}(\alpha) \leq k$, it follows that for all $w' \in T'$, $w' \not\models \alpha$, i.e., $T' \models \phi$.

- Let $\phi = \psi_1 \vee \psi_2$. Assume that $T \models \phi$ and $K, T \leftrightarrows_k K', T'$, where $k = \mathrm{md}(\phi)$. Then $K, T_1 \models \psi_1$ and $K, T_2 \models \psi_2$ for some $T_1, T_2 \subseteq T$ such that $T_1 \cup T_2 = T$. Let $m = \mathrm{md}(\psi_1)$ and $n = \mathrm{md}(\psi_2)$. By Lemma 3.15 (iii), there are subteams $T_1', T_2' \subseteq T'$ such that $T_1' \cup T_2' = T'$ and $K, T_i \leftrightarrows_k K', T_i'$ for $i \in \{1, 2\}$. Since $m, n \leq k$, by Lemma 3.14 $K, T_1 \leftrightarrows_m K', T_1'$ and $K, T_2 \leftrightarrows_n K', T_2'$. By the induction hypothesis, $T_1' \models \psi_1$ and $T_2' \models \psi_2$, so $T' \models \phi$.

- Let $\phi = \psi_1 \wedge \psi_2$. Assume that $T \models \phi$ and $K, T \leftrightarrows_k K', T'$, where $k = \mathrm{md}(\phi)$. Then $T \models \psi_1$ and $T \models \psi_2$. Let $m = \mathrm{md}(\psi)$ and $n = \mathrm{md}(\psi_2)$. Now $m, n \leq k$, so by Lemma 3.14, $K, T \leftrightarrows_m K', T'$ and $K, T \leftrightarrows_n K', T'$. By the induction hypothesis, $T' \models \psi_1$ and $T' \models \psi_2$, hence $T' \models \phi$.

- Let $\phi = \Diamond\psi$. Assume that $T \models \Diamond\psi$ and $K, T \leftrightarrows_k K', T'$, where $k = \mathrm{md}(\phi)$. Then $S \models \psi$ for some S such that TRS. By Lemma 3.15 (i), there is a S' such that $T'R'S'$ and $K, S \leftrightarrows_{k-1} K', S'$. Since $\mathrm{md}(\psi) = k - 1$, the induction hypothesis implies that $S' \models \psi$, so $T' \models \phi$

- Let $\phi = \Box\psi$. Assume that $T \models \Box\psi$ and $K, T \leftrightarrows_k K', T'$, where $k = \mathrm{md}(\phi)$. Then $R[T] \models \psi$. By Lemma 3.15 (ii) it follows that $K, R[T] \leftrightarrows_{k-1} K', R'[T']$. Since $\mathrm{md}(\psi) = k - 1$, the induction hypothesis implies that $R'[T'] \models \psi$, so $R'[T'] \models \phi$.

- Let $\phi = \alpha_1 \ldots \alpha_n \subseteq \beta_1 \ldots \beta_n$, and suppose that $T \models \phi$ and $K, T \leftrightarrows_k K', T'$, where $k = \mathrm{md}(\phi)$. Let $w' \in T'$. By the definition of k-bisimulation, there exists a $w \in T$ such that $K, w \leftrightarrows_k K', w'$. Since $\mathrm{md}(\alpha_i) \leq k$, by Theorem 3.8 it follows that $w' \models \alpha_i \iff w \models \alpha_i$ for all $i = 1, \ldots, n$. By assumption, there exists a $v_0 \in T$ such that $w \models \alpha_i \iff v_0 \models \beta_i$. Again, by the definition of k-bisimulation, there exists a $v' \in T'$ such that $K, v_0 \leftrightarrows_k K', v'$ for all $i = 1, \ldots, n$. Since $\mathrm{md}(\beta_i) \leq k$, by Theorem 3.8 it follows that $v_0 \models \beta_i \iff v' \models \beta_i$ for all $i = 1, \ldots, n$. The state $w' \in T'$ was arbitrary, so we conclude that for all $w' \in T'$ there exists a $v' \in T'$ such that $w' \models \alpha_i \iff v' \models \beta_i$ for all $i = 1, \ldots, n$. So $T' \models \phi$.

Therefore $T \models \phi$ implies $T' \models \phi$. The other direction is symmetrical. $\Box$

3.2 Expressive completeness and normal form

In this section we prove that $\mathcal{MIL}$ is expressively complete for classes (of Kripke models with teams) that are closed under unions, invariant under k-bisimulation for some k, and have the empty team property. Through the expressive completeness proof we obtain a normal form for the logic. We review the expressive completeness proof provided in [18], and suggest a simplification to the normal form in line with the normal forms presented in [22]. We also show that $\mathcal{MIL}$ is compact.

A class $\mathcal{K} \subseteq \mathcal{CT}(\Phi)$ is said to be invariant under k-bisimulation, if $(K, T) \in \mathcal{K}$ and $K, T \leftrightarrows_k K', T'$ imply that $(K', T') \in \mathcal{K}$. We say that $\mathcal{K}$ is closed under unions if $(K, T_i) \in \mathcal{K}$ for all i in some nonempty index set I implies that $(K, \bigcup_{i \in I} T_i) \in \mathcal{K}$. We say that $\mathcal{K}$ has the empty team property if $(K, \emptyset) \in \mathcal{K}$.

For each formula ϕ in a logic $\mathcal{L}$, let $\|\phi\| \subseteq \mathcal{CT}(\Phi)$ be the class defined by ϕ, i.e.,

$$\|\phi\| := \{(K, T) \in \mathcal{CT}(\Phi) \mid K, T \models \phi\}.$$

Corollary 3.18. *Let Φ be a set of propositional symbols and let $\phi \in \mathcal{MIL}(\Phi)$. Then there exists a $k \in \mathbb{N}$ such that the class $\|\phi\|$ is invariant under k-bisimulation.*

Proof. By Theorem 3.17, it follows immediately that a class $\|\phi\|$, where $\phi \in \mathcal{MIL}(\Phi)$, is invariant under k-bisimulation with $k = \mathrm{md}(\phi)$. □

Lemma 3.19. *Let Φ be a set of propositional symbols and let $\phi \in \mathcal{MIL}(\Phi)$. Then the class $\|\phi\|$ is closed under unions and has the empty team property.*

Proof. Let $\phi \in \mathcal{MIL}(\Phi)$ and let $(K, T_i) \in \|\phi\|$ for all i in some nonempty index set I. Then $T_i \models \phi$ for all $i \in I$. By Proposition 2.14, $\bigcup_{i \in I} T_i \models \phi$ so $(K, \bigcup_{i \in I} T_i) \in \|\phi\|$. Therefore the class is closed under unions.

By Proposition 2.15, $\emptyset \models \phi$, so $(K, \emptyset) \in \|\phi\|$. Hence $\|\phi\|$ has the empty team property. □

Now we know that every $\mathcal{MIL}$-definable class has the empty team property, is closed under unions and invariant under k-bisimulation for some k. We will show in Theorem 3.23 that if a class has these three properties, then it is definable by an $\mathcal{MIL}$-formula. This would mean that any formula with these three properties can be defined with a formula in $\mathcal{MIL}$, i.e., $\mathcal{MIL}$ is expressively complete.

First we aim to define characteristic formulas for teams. We begin by proving that there are $\mathcal{MIL}$-formulas that define the back and forth conditions of (team) k-bisimulation (Definition 3.12). The result is due to [18]. By simplifying the formula that defines the forth condition in Lemma 3.20, we suggest a simplification of the inclusion atom part of the characteristic formulas for teams given in [18], similar to the normal forms presented in [22].

We show that the forth condition (F_k) in Definition 3.12 can be defined by an $\mathcal{ML}$-formula. We handle the case of empty teams in Lemma 3.22.

Lemma 3.20. *Let Φ be a finite set of propositional symbols and $k \in \mathbb{N}$. Let $(K,T) \in \mathcal{CT}(\Phi)$ and assume that $T \neq \emptyset$, then there is a formula $\zeta^k_{K,T} \in \mathcal{ML}(\Phi)$ such that for any $(K',T') \in \mathcal{CT}(\Phi)$ with $T' \neq \emptyset$,*

$$K',T' \models \zeta^k_{K,T} \iff \text{for all } w \in T \text{ there is a } w' \in T' \text{ such that } K',w' \leftrightarrows_k K,w.$$

Proof. Define for each $k \in \mathbb{N}$ and $(K,T) \in \mathcal{CT}(\Phi)$ with $T \neq \emptyset$:

$$\zeta^k_{K,T} = \bigwedge_{w \in T} (\top \subseteq \chi^k_{K,w}).$$

We note that since there are only a finite number of non-equivalent k:th Hintikka-formulas, we can assume the conjunction $\bigwedge_{w\in T}(\top \subseteq \chi^k_{K,w})$ to be finite, thus $\zeta^k_{K,T}$ is a formula.

Assume that $T' \neq \emptyset$. Then we have the following equivalences:

$$\begin{aligned}
&T' \models \bigwedge_{w \in T} (\top \subseteq \chi^k_{K,w}) \\
&\iff \forall w \in T : T' \models \top \subseteq \chi^k_{K,w} \\
&\iff \forall w \in T\ \forall v' \in T'\ \exists w' \in T' : v' \models \top \iff w' \models \chi^k_{K,w} \\
&\iff \forall w \in T\ \exists w' \in T' : w' \models \chi^k_{K,w} && \text{(Since } T' \neq \emptyset) \\
&\iff \forall w \in T\ \exists w' \in T' : K',w' \leftrightarrows_k K,w. && \text{(By Theorem 3.8)}
\end{aligned}$$

□

Next we show that the back condition (B_k) in Definition 3.12 can be defined by an $\mathcal{ML}$-formula.

Lemma 3.21. *Let Φ be a finite set of propositional symbols and $k \in \mathbb{N}$. Let $(K,T) \in \mathcal{CT}(\Phi)$ be such that $T \neq \emptyset$, then there is a formula $\eta^k_{K,T} \in \mathcal{ML}(\Phi)$ such that for any $(K',T') \in \mathcal{CT}(\Phi)$ with $T' \neq \emptyset$,*

$$K',T' \models \eta^k_{K,T} \iff \text{for all } w' \in T' \text{ there is a } w \in T \text{ such that } K,w \leftrightarrows_k K',w'.$$

Proof. Define for each $k \in \mathbb{N}$ and $(K,T) \in \mathcal{CT}(\Phi)$ with $T \neq \emptyset$:

$$\eta^k_{K,T} = \bigvee_{w \in T} \chi^k_{K,w}.$$

We note that since there are only a finite number of non-equivalent k:th Hintikka-formulas, we can assume the disjunction $\bigvee_{w\in T} \chi^k_{K,w}$ to be finite, thus $\eta^k_{K,T}$ is a formula.

Assume that T and T' are both nonempty, and let $T' \models \eta^k_{K,T}$. Then, for each $w \in T$, there exists a subteam $T'_w \subseteq T'$ such that $T' = \bigcup_{w \in T} T'_w$ and $T'_w \models \chi^k_{K,w}$. Let $w' \in T'$. Now w' is in T'_w for some w in T, and then by flatness $w' \models \chi^k_{K,w}$, which by Theorem 3.8 implies that $K, w \leftrightarrows_k K', w'$.

For the other direction, assume that for all $w' \in T'$ there exists a $w \in T$ such that $K, w \leftrightarrows_k K', w'$. For each $w \in T$, define

$$T'_w = \{w' \in T' \mid K', w' \leftrightarrows_k K, w\}.$$

Let $w \in T$. In the case that w does not have a k-bisimilar state in T', it follows that $T'_w = \emptyset$, which by the empty team property implies that $T'_w \models \chi^k_{K,w}$. When $T'_w \neq \emptyset$, flatness and Theorem 3.8 imply that $T'_w \models \chi^k_{K,w}$. So $\bigcup_{w \in T} T'_w \models \bigvee_{w \in T} \chi^k_{K,w}$. It remains to show that $T' = \bigcup_{w \in T} T'_w$. Clearly $\bigcup_{w \in T} T'_w \subseteq T'$. We show that $T' \subseteq \bigcup_{w \in T} T'_w$. Let $w' \in T'$, by assumption there exists a $w \in T$ such that $K, w \leftrightarrows_k K', w'$, so $w' \in T'_w$. Hence $w' \in \bigcup_{w \in T} T'_w$. We conclude that $T' \models \bigvee_{w \in T} \chi^k_{K,w}$. □

We now combine the previous two lemmas to obtain characteristic formulas for teams.

Lemma 3.22. *Let Φ be a finite set of propositional symbols and $k \in \mathbb{N}$. Let $(K, T) \in \mathcal{CT}(\Phi)$, then there is a formula $\theta^k_{K,T} \in \mathcal{MIL}(\Phi)$ such that for any $(K', T') \in \mathcal{CT}(\Phi)$,*

$$K', T' \models \theta^k_{K,T} \iff K, T \leftrightarrows_k K', T' \text{ or } T' = \emptyset.$$

Proof. Define for each $k \in \mathbb{N}$ and $(K, T) \in \mathcal{CT}(\Phi)$ with $T \neq \emptyset$:

$$\theta^k_{K,T} = \eta^k_{K,T} \wedge \zeta^k_{K,T},$$

where $\eta^k_{K,T}$ and $\zeta^k_{K,T}$ are as in Lemma 3.20 and Lemma 3.21, and for $T = \emptyset$ define:

$$\theta^k_{K,T} = \bigvee \emptyset \wedge \bigwedge \emptyset.$$

If $T = \emptyset$, then $K, T \leftrightarrows_k K', T'$ holds only when $T' = \emptyset$. Note that $\theta^k_{K,\emptyset} = \bigvee \emptyset \wedge \bigwedge \emptyset \equiv \bot$. Thus $T' \models \theta^k_{K,T}$ if and only if $T' = \emptyset$.

If $T' = \emptyset$, then the equivalence follows by the empty team property. Otherwise, if T' is not empty, then $T' \models \eta^k_{K,T} \wedge \zeta^k_{K,T}$ if and only if the back condition (B_k) and forth condition (F_k) in Definition 3.12 hold (by Lemma 3.20 and Lemma 3.21), which is the case if and only if $K, T \leftrightarrows_k K', T'$. □

We call the characteristic formulas for teams obtained in Lemma 3.22 *team-characteristic formulas*. We recall that for a finite set Φ of propositional symbols, there are only a finite number of non-equivalent k:th Hintikka formulas. Therefore clearly there are only a finite number of non-equivalent k:th team-characteristic formulas.

Finally, we show that $\mathcal{MIL}$ is expressively complete.

Theorem 3.23. *Let Φ be a finite set of propositional symbols and let $\mathcal{C} \subseteq \mathcal{CT}(\Phi)$. The class $\mathcal{C}$ is definable in $\mathcal{MIL}$ if and only if it has the empty team property, is closed under unions, and invariant under k-bisimulation for some $k \in \mathbb{N}$.*

Proof. Suppose that $\mathcal{C}$ is definable in $\mathcal{MIL}$, then by Corollary 3.18, $\mathcal{C}$ is invariant under k-bisimulation for some $k \in \mathbb{N}$. By Lemma 3.19, $\mathcal{C}$ is closed under unions and has the empty team property.

Suppose that $\mathcal{C}$ has the empty team property, is closed under unions, and invariant under k-bisimulation for some $k \in \mathbb{N}$. Let ϕ' be the formula

$$\bigvee_{(K,T)\in\mathcal{C}} \theta^k_{K,T},$$

where $\theta^k_{K,T}$ is defined as in Lemma 3.22. Let us prove that ϕ' defines the class $\mathcal{C}$. Suppose that $(K,T) \in \mathcal{C}$. Clearly $K,T \leftrightarrows_k K,T$, so by Lemma 3.22 $T \models \theta^k_T$, hence $T \models \phi'$.

Suppose that $T' \models \phi'$. Then there are subsets $T'_T \subseteq T'$ such that $T' = \bigcup_{(K,T)\in\mathcal{C}} T'_T$ and $T'_T \models \theta^k_T$. By Lemma 3.22 it follows that either $K,T \leftrightarrows_k K',T'_T$ or $T'_T = \emptyset$. If $T'_T = \emptyset$, then by the empty team property $(K',T'_T) \in \mathcal{C}$. If $K,T \leftrightarrows_k K',T'_T$, then since $\mathcal{C}$ is invariant under k-bisimulation, $(K',T'_T) \in \mathcal{C}$ follows. So $(K',T'_T) \in \mathcal{C}$ and since $\mathcal{C}$ is closed under unions, we conclude that $(K',T') \in \mathcal{C}$. □

It follows from Theorem 3.23 that any $\mathcal{MIL}$-formula is equivalent to a formula of the form

$$\text{(NF)} \qquad \bigvee_{(K,T)\in\mathcal{C}} \theta^k_{K,T} = \bigvee_{(K,T)\in\mathcal{C}} \Big(\bigvee_{w\in T} \chi^k_{K,w} \wedge \bigwedge_{w\in T} (\top \subseteq \chi^k_{K,w})\Big).$$

We say that formulas in this form are in the *normal form.*

Corollary 3.24. *Let ϕ be an $\mathcal{MIL}$-formula. Then there is a formula ϕ' of the same form as in (NF) that is equivalent to ϕ. We say that ϕ' is the normal form of ϕ.*

Proof. Let $\phi \in \mathcal{MIL}(\Phi)$. By Theorem 3.23 the $\mathcal{MIL}$-definable class $\|\phi\|$ is invariant under k-bisimulation for some $k = \mathrm{md}(\phi)$, closed under unions, and has the empty team property. By the proof of Theorem 3.23, the class is definable by a formula ϕ' of the form (NF). Thus, $\phi \equiv \phi'$. □

Hereafter, whenever the Kripke model is clear from the context, we write Hintikka formulas and team-characteristic formulas without it.

We briefly mention another consequence of the expressive completeness of $\mathcal{MIL}$: $\mathcal{MIL}$ admits uniform interpolation.

It was proved in [7] that any expressively complete team-based propositional or modal logic admits uniform interpolation. It then follows from Theorem 3.23 that $\mathcal{MIL}$ admits

uniform interpolation. We refer the reader to [7] for the detailed proof and more discussion about the notion of uniform interpolation.

Definition 3.25. Let ϕ_1 and ϕ_2 be formulas in a logic $\mathcal{L}(\Phi)$ such that $\phi_1 \models \phi_2$. Then ψ is an interpolant of ϕ_1 and ϕ_2, if $\phi_1 \models \psi$, $\psi \models \phi_2$, and ψ is constructed from the common propositional symbols of ϕ_1 and ϕ_2.

An interpolant ψ is a *uniform interpolant* if it does not depend on the formula ϕ_2. We say that a logic admits *uniform interpolation* if we can find a uniform interpolant for all $\psi \in \mathcal{L}$, assuming certain conditions.

Corollary 3.26. *$\mathcal{MIL}$ admits uniform interpolation.*

Proof. By [7] and Theorem 3.23. □

We end this subsection by proving compactness for $\mathcal{MIL}$, using compactness of the expressively stronger logic modal team logic $\mathcal{MTL}$. We adopt the definition of $\mathcal{MTL}$ from [22].

Definition 3.27. Let Φ be a set of propositional symbols. The syntax for modal team logic $\mathcal{MTL}(\Phi)$ is given by:

$$\alpha := p \mid \neg p \mid \sim\alpha \mid (\alpha \vee \alpha) \mid (\alpha \wedge \alpha) \mid \Diamond\alpha \mid \Box\alpha,$$

where $p \in \Phi$.

The obtain the semantics for $\mathcal{MTL}$, simply extend the semantics for $\mathcal{ML}$ with the following clause:

$$K, T \models \sim\alpha \iff K, T \not\models \alpha.$$

We recall that a logic $\mathcal{L}$ is compact if $\Gamma \cup \{\phi\}$ is a (possibly infinite) set of $\mathcal{L}$-formulas, and $\Gamma \models \phi$, then there is a finite subset $\Gamma_0 \subseteq \Gamma$ such that $\Gamma_0 \models \phi$. A proof system for a logic $\mathcal{L}$ is strongly complete if whenever $\Gamma \cup \{\phi\}$ is a (possibly infinite) set of $\mathcal{L}$-formulas: If $\Gamma \models \phi$, then $\Gamma \vdash \phi$. A system is sound if $\Gamma \vdash \phi$ implies $\Gamma \models \phi$.

It is shown in [22] that modal team logic $\mathcal{MTL}$ is expressively complete for the class of all team properties invariant under k-bisimulation for some k. Thus $\mathcal{MTL}$ is expressively stronger than $\mathcal{MIL}$. In [23, 24] it is shown that $\mathcal{MTL}$ has a proof system that is strongly complete, from which it follows that the logic is compact.

Proposition 3.28. *Let $\mathcal{L}$ be a logic that has a strongly complete proof system. Then $\mathcal{L}$ is compact.*

Proof. Let $\Gamma \cup \{\phi\}$ be an infinite set of $\mathcal{L}$-formulas, and let $\Gamma \models \phi$. Then by strong completeness $\Gamma \vdash \phi$. Since all derivations are finite, there is a finite subset $\Gamma_0 \subseteq \Gamma$ such that $\Gamma_0 \vdash \phi$, which implies $\Gamma_0 \models \phi$ by soundness. Hence $\mathcal{L}$ is compact. □

As an instance of the previous proposition, $\mathcal{MTL}$ is compact. We can conclude that $\mathcal{MIL}$ is compact.

Lemma 3.29 (Compactness)**.** *For any set of $\mathcal{MIL}$ formulas $\Gamma \cup \{\phi\}$ such that $\Gamma \models \phi$, there is a finite subset $\Gamma_0 \subseteq \Gamma$ such that $\Gamma_0 \models \phi$.*

Proof. Suppose that $\Gamma \models \phi$. $\mathcal{MTL}$ is expressively stronger than $\mathcal{MIL}$, so for any formula $\psi \in \mathcal{MIL}$ there is a formula $\psi' \in \mathcal{MTL}$ such that $\psi \equiv \psi'$. Let $\phi' \in \mathcal{MTL}$ be such that $\phi' \equiv \phi$. Define $\Gamma' = \{\psi' \in \mathcal{MTL} \mid \psi \in \Gamma \text{ and } \psi \equiv \psi'\}$, then $\Gamma' \models \phi'$. Since $\mathcal{MTL}$ is compact, there is a finite subset $\Gamma'_0 \subseteq \Gamma'$ such that $\Gamma'_0 \models \phi'$. Now $\Gamma_0 = \{\psi \in \mathcal{MIL} \mid \psi' \in \Gamma'_0 \text{ and } \psi' \equiv \psi\}$ is a finite set such that $\Gamma_0 \models \phi$. □

3.3 Inclusion atoms revisited

In this section we examine the inclusion atom closer. In particular, we show that an arbitrary inclusion atom is equivalent to a formula in which all non-classical subformulas are of the form $\top \subseteq \alpha$. In fact, by extending $\mathcal{ML}$ with only top inclusion atoms we attain the same expressive power as $\mathcal{MIL}$. We will use this idea in the completeness proof. The results in this section are essentially due to [30].

We call inclusion atoms with only $\bot$ and $\top$ on the left-hand side of the inclusion symbol *primitive inclusion atoms*. In particular, if there are only top formulas on the left-hand side of the inclusion symbol, we call it a *top inclusion atom*. It follows by the semantics of the inclusion atom that primitive inclusion atoms are *upwards closed*, i.e., for $x \in \{\top, \bot\}$, whenever a nonempty team T is such that $T \models x \subseteq \alpha$, then $T' \models x \subseteq \alpha$ for all $T' \supseteq T$.

Let us define some notation regarding inclusion atoms. Let $x \in \{\top, \bot\}$ and define $\alpha^\top = \alpha$ and $\alpha^\bot = \neg\alpha$. For a sequence $\mathsf{a} = \langle \alpha_1, \ldots, \alpha_n \rangle$ and $\mathsf{x} = \langle x_1, \ldots, x_n \rangle$ we abbreviate $\alpha_1^{x_1} \wedge \cdots \wedge \alpha_n^{x_n}$ by a^{x}, where x is a sequence of $\top$ and $\bot$ formulas. Let $|\mathsf{a}|$ denote the length of the sequence a.

First, we show a useful semantic fact about inclusion atoms: A primitive inclusion atom $\mathsf{x} \subseteq \mathsf{a}$ is satisfied by a nonempty team if and only if the team has a witness to the conjunction a^{x}.

Lemma 3.30. *Let $(K, T) \in \mathcal{CT}(\Phi)$, and let T be nonempty. Then $K, T \models \mathsf{x} \subseteq \mathsf{a}$ if and only if there exists a $v \in T$ such that $K, v \models \mathsf{a}^{\mathsf{x}}$. In particular, $K, T \models \top \subseteq \alpha$ if and only if there exists a $v \in T$ such that $K, v \models \alpha$.*

Proof. Suppose that $T \neq \emptyset$ and that $T \models \mathsf{x} \subseteq \mathsf{a}$. Let $w \in T$, then there is a $v \in T$ such that $w \models x_i \iff v \models \alpha_i$ for all $i = 1, \ldots, n$. Let $i \in \{1, \ldots, n\}$. If $x_i = \top$, then $w \models x_i$,

so $v \models \alpha_i$. Hence $v \models \alpha_i^\top$. If $x_i = \bot$, then $w \not\models x_i$, so $v \not\models \alpha_i$. Hence $v \models \alpha_i^\bot$. So for all $i = 1, \dots, n$, $v \models \alpha_i^{x_i}$. We conclude $v \models \mathsf{a}^{\mathsf{x}}$.

For the other direction, assume that there is a $v \in T$ such that $v \models \mathsf{a}^{\mathsf{x}}$. Then $v \models \alpha_i^{x_i}$ for all $i = 1, \dots, n$. Let $i \in \{1, \dots, n\}$ and let $w \in T$. If $x_i = \top$, then $v \models \alpha_i^{x_i} = \alpha_i$, hence $w \models x_i \iff v \models \alpha_i$ holds. If $x_i = \bot$, then $v \models \alpha_i^{x_i} = \neg\alpha_i$, so $w \not\models x_i$ and $v \not\models \alpha_i$, hence $w \models x_i \iff v \models \alpha_i$ follows. Thus $T \models \mathsf{x} \subseteq \mathsf{a}$. □

The next lemma allows us to reduce an arbitrary inclusion atom to a formula in which all non-classical subformulas are primitive inclusion atoms.

For sequences $\mathsf{a} = \langle \alpha_1 \dots \alpha_n \rangle$ and $\mathsf{b} = \langle \beta_1 \dots \beta_n \rangle$, we write $w \models \mathsf{a} \iff v \models \mathsf{b}$ instead of $w \models \alpha_i \iff v \models \beta_i$ for all $i \in \{1, \dots, n\}$.

Lemma 3.31. *Let* a, b *be sequences of* $\mathcal{ML}$*-formulas, and let* x *be a sequence of* $\top$ *and* $\bot$ *formulas. Then*

$$\bigwedge_{\mathsf{x} \in \{\top, \bot\}^{|\mathsf{a}|}} (\neg \mathsf{a}^{\mathsf{x}} \vee \mathsf{x} \subseteq \mathsf{b}) \equiv \mathsf{a} \subseteq \mathsf{b}.$$

Proof. For the left-to-right direction, suppose that $T \models \neg \mathsf{a}^{\mathsf{x}} \vee \mathsf{x} \subseteq \mathsf{b}$ for all $\mathsf{x} \in \{\top, \bot\}^{|\mathsf{a}|}$. We show that $T \models \mathsf{a} \subseteq \mathsf{b}$. If $T = \emptyset$, then the result follows by the empty team property. Suppose that $T \neq \emptyset$. Let $w \in T$ and let x be such that $w \models \mathsf{x} \iff w \models \mathsf{a}$, i.e., $w \models \mathsf{a}^{\mathsf{x}}$. From $T \models \neg \mathsf{a}^{\mathsf{x}} \vee \mathsf{x} \subseteq \mathsf{b}$, it follows that there are subteams $T_1, T_2 \subseteq T$ such that $T_1 \cup T_2 = T$, $T_1 \models \neg \mathsf{a}^{\mathsf{x}}$ and $T_2 \models \mathsf{x} \subseteq \mathsf{b}$. Clearly $w \notin T_1$, so $w \in T_2$, hence there is a $v \in T_2$ such that $w \models \mathsf{x} \iff v \models \mathsf{b}$. Therefore $w \models \mathsf{a} \iff v \models \mathsf{b}$, thus $T \models \mathsf{a} \subseteq \mathsf{b}$.

For the right-to-left direction, suppose that $T \models \mathsf{a} \subseteq \mathsf{b}$ and let $\mathsf{x} \in \{\top, \bot\}^{|\mathsf{a}|}$. We show that $T \models \neg \mathsf{a}^{\mathsf{x}} \vee \mathsf{x} \subseteq \mathsf{b}$. If $T = \emptyset$, then the result follows by the empty team property. Suppose that $T \neq \emptyset$ and let $n = |\mathsf{a}|$. Define the team

$$T_{\mathsf{x}} = \{w \in T \mid w \models \alpha_i \not\iff w \models x_i \text{ for some } i \in \{1, \dots, n\}\}.$$

We show that $T_{\mathsf{x}} \models \neg \mathsf{a}^{\mathsf{x}}$. Let $w \in T_{\mathsf{x}}$. Then there is some $i \in \{1, \dots, n\}$ such that $w \models \alpha_i \not\iff w \models x_i$, hence $w \not\models \alpha_i^{x_i}$. It follows that $w \not\models \mathsf{a}^{\mathsf{x}} = \alpha_1^{x_1} \wedge \dots \wedge \alpha_n^{x_n}$. Hence $T_{\mathsf{x}} \models \neg \mathsf{a}^{\mathsf{x}}$.

If $T_{\mathsf{x}} = T$, then $T \models \neg \mathsf{a}^{\mathsf{x}}$ so $T \models \neg \mathsf{a}^{\mathsf{x}} \vee \mathsf{x} \subseteq \mathsf{b}$. If $T \setminus T_{\mathsf{x}} \neq \emptyset$, then for any $u \in T$ and v picked from $T \setminus T_{\mathsf{x}}$, we have that $u \models \mathsf{x} \iff v \models \mathsf{x} \iff v \models \mathsf{a}$, where the first equivalence is trivial and the second is by $v \in T \setminus T_{\mathsf{x}}$. Since $T \models \mathsf{a} \subseteq \mathsf{b}$, there is a $w \in T$ such that $u \models \mathsf{x} \iff v \models \mathsf{a} \iff w \models \mathsf{b}$. Now $T \models \mathsf{x} \subseteq \mathsf{b}$ and $T \models \neg \mathsf{a}^{\mathsf{x}} \vee \mathsf{x} \subseteq \mathsf{b}$ follows. Since x was arbitrary we conclude $T \models \neg \mathsf{a}^{\mathsf{x}} \vee \mathsf{x} \subseteq \mathsf{b}$ for all $\mathsf{x} \in \{\top, \bot\}^{|\mathsf{a}|}$ as desired. □

The *arity* of an inclusion atom is the number of formulas on either side of the inclusion symbol. The next lemma allows us to further reduce a primitive inclusion atom to a formula in which all non-classical subformulas are primitive inclusion atoms of arity one.

Lemma 3.32. *Let* a, b *be sequences of* $\mathcal{ML}$*-formulas, and let* x, y *be sequences of* $\top$ *and* $\bot$ *formulas. Then*

$$\mathsf{xy} \subseteq \mathsf{ab} \equiv \mathsf{x} \subseteq \mathsf{a} \wedge ((\mathsf{y} \subseteq \mathsf{b} \wedge \mathsf{a}^{\mathsf{x}}) \vee \neg \mathsf{a}^{\mathsf{x}})$$

Proof. First, suppose that $T \models \mathsf{xy} \subseteq \mathsf{ab}$. We show that $T \models \mathsf{x} \subseteq \mathsf{a} \wedge ((\mathsf{y} \subseteq \mathsf{b} \wedge \mathsf{a}^{\mathsf{x}}) \vee \neg \mathsf{a}^{\mathsf{x}})$. If $T = \emptyset$ the result follows by the empty team property. Suppose that $T \neq \emptyset$. Clearly $T \models \mathsf{x} \subseteq \mathsf{a}$. Define a team

$$T' = \{v \in T \mid v \models \mathsf{a} \iff v \models \mathsf{x}\},$$

and let $S = T \setminus T'$. Now $T' \models \mathsf{a}^{\mathsf{x}}$ and $S \models \neg \mathsf{a}^{\mathsf{x}}$. Let $v \in T'$, then since $T' \subseteq T$ and $T \models \mathsf{xy} \subseteq \mathsf{ab}$, there is a $u \in T$ such that $v \models \mathsf{x} \iff u \models \mathsf{a}$ and $v \models \mathsf{y} \iff u \models \mathsf{b}$. Now $u \models \mathsf{a} \iff v \models \mathsf{x} \iff u \models \mathsf{x}$, hence $u \in T'$. Therefore $T' \models \mathsf{y} \subseteq \mathsf{b}$. Since $T' \cup S = T$, we conclude that $T \models \mathsf{x} \subseteq \mathsf{a} \wedge ((\mathsf{y} \subseteq \mathsf{b} \wedge \mathsf{a}^{\mathsf{x}}) \vee \neg \mathsf{a}^{\mathsf{x}})$.

For the other direction, suppose that $T \models \mathsf{x} \subseteq \mathsf{a} \wedge ((\mathsf{y} \subseteq \mathsf{b} \wedge \mathsf{a}^{\mathsf{x}}) \vee \neg \mathsf{a}^{\mathsf{x}})$. We show that $T \models \mathsf{xy} \subseteq \mathsf{ab}$. If $T = \emptyset$ the result follows by the empty team property. Suppose that $T \neq \emptyset$ and let $v \in T$. Since $T \models \mathsf{x} \subseteq \mathsf{a}$, we have that there is a $u \in T$ such that $u \models \mathsf{x} \iff v \models \mathsf{x} \iff u \models \mathsf{a}$, where the first equivalence is trivial. We note that $u \models \mathsf{a}^{\mathsf{x}}$. Also, there are subteams $T_1, T_2 \subseteq T$ such that $T_1 \cup T_2 = T$, $T_1 \models \neg \mathsf{a}^{\mathsf{x}}$ and $T_2 \models \mathsf{y} \subseteq \mathsf{b} \wedge \mathsf{a}^{\mathsf{x}}$. Now $u \notin T_1$, so $u \in T_2$, and therefore T_2 is nonempty. Then there is a $w \in T_2$ such that $v \models \mathsf{y} \iff u \models \mathsf{y} \iff w \models \mathsf{b}$. Also $T_2 \models \mathsf{a}^{\mathsf{x}}$, so $v \models \mathsf{x} \iff w \models \mathsf{x} \iff w \models \mathsf{a}$. Therefore $T \models \mathsf{xy} \subseteq \mathsf{ab}$. □

In addition, one can easily show that $\bot \subseteq \alpha \equiv \top \subseteq \neg\alpha$. This means that we in fact can reduce any inclusion atom to a formula in which all non-classical subformulas are inclusion atoms of the form $\top \subseteq \alpha$. Indeed, the non-classical subformulas in the normal form for $\mathcal{MIL}$, contain this type of inclusion atoms only.

This observation motivates the definition of an operator $\diamondsuit$, such that for any $\mathcal{ML}$-formula α, $\top \subseteq \alpha \equiv \diamondsuit\alpha$.

Definition 3.33. The semantics of the operator $\diamondsuit$ is defined by the following clause:

$$K, T \models \diamondsuit\phi \iff T = \emptyset \text{ or there is a } w \in T \text{ such that } K, \{w\} \models \phi.$$

Intuitively, the formula $\diamondsuit\phi$ is true in a nonempty team T if the team T contains a witness state for the formula ϕ. We may view the operator $\diamondsuit$ as a "local diamond" as it asks for a witness of the formula ϕ "locally" from the team T itself, instead of from the successor teams S satisfying TRS (as with the usual diamond $\Diamond$).

Let us now consider modal logic extended with the operator $\diamondsuit$, denoted as $\mathcal{ML}(\diamondsuit)$. We just noted that any inclusion atom in $\mathcal{MIL}$ can be reduced to a formula which contains only top inclusion atoms of arity one. Therefore any formula in $\mathcal{MIL}$ can be

expressed by an equivalent $\mathcal{ML}(\diamondplus)$-formula. Conversely, it can easily be shown that for each $\mathcal{ML}(\diamondplus)$-formula ϕ, the class $\|\phi\|$ is invariant under k-bisimulation for some k, is closed under unions and has the empty team property, and therefore by Theorem 3.23 ϕ can be expressed by an equivalent $\mathcal{MIL}$-formula. Hence the expressive powers of the two logics are equal.

Proposition 3.34. *$\mathcal{MIL}$ is expressively equivalent to $\mathcal{ML}(\diamondplus)$.*

We can further ask if the formula $\diamondplus\,\phi$ is uniformly definable in $\mathcal{MIL}$, i.e., is there an $\mathcal{MIL}$-formula $\psi(p)$ such that $\diamondplus\,(\phi) \equiv \psi(\phi/p)$, where $\psi(\phi/p)$ refers to the formula obtained by substituting each occurrence of p in ψ by ϕ. This is left for future work. For more discussions on uniform definability of logical constants in the team semantics setting, the reader is referred to [9, 5, 31, 6, 27].

Another related operator is the "might" operator ∇ (also known in the literature as the "nonemptiness operator") introduced in [18]. We recall the semantics for the operator ∇:

$$K, T \models \nabla\phi \iff T = \emptyset, \text{ or there exists } S \subseteq T \text{ such that } S \neq \emptyset \text{ and } K, S \models \phi.$$

Clearly, $\diamondplus\,\phi \models \nabla\phi$ holds in general, and the other direction $\nabla\phi \models \diamondplus\,\phi$ holds whenever ϕ is downward closed. In particular, we have $\diamondplus\,\alpha \equiv \nabla\alpha$ for any $\mathcal{ML}$-formula α. Thus, $\top \subseteq \alpha \equiv \nabla\alpha$ as well.

It is shown in [18] that modal logic extended with ∇, $\mathcal{ML}(\nabla)$, is expressively equivalent to $\mathcal{MIL}$. Note that the normal form formula for $\mathcal{ML}(\nabla)$-formulas obtained in [18] is essentially the same as our normal form (NF) for $\mathcal{MIL}$, but with ∇-modality formulas replacing the top inclusion atoms.

Chapter 4

Axiomatization

The goal of this chapter is to define a complete proof system for $\mathcal{MIL}$. We divide the chapter into two parts. In the first section, we define the proof system for $\mathcal{MIL}$. We show that all rules included in the system are sound. In the second section, we show that the proof system is complete. One important part in the proof of the completeness theorem, is to show that all $\mathcal{MIL}$-formulas have a provably equivalent formula in the normal form. Using the normal forms, we follow the same strategy for proving the completeness theorem as in [30], which is a commonly-used strategy for proving completeness for propositional and modal team-based logics.

4.1 Axioms and rules

Modal logics are typically axiomatized using a Hilbert-style system. However, since $\mathcal{MIL}$ does not have an implication, we instead use a natural deduction system. This section is divided into two parts, first we define a natural deduction proof system for $\mathcal{MIL}$, then we show that the proof system is sound.

4.1.1 Proof system

In this subsection we introduce all the axioms and rules that are included in our proof system for $\mathcal{MIL}$. We introduce the axioms and rules of the system in steps. We also define some useful rules that are derivable in our system. Many of the rules are based on [30] and some are from [29]. The rules that concern both modal operators and inclusion atoms are new.

Derivations are denoted by D, with or without an index.

Table 4.1 includes rules concerning negation, disjunction and conjunction. $\mathcal{MIL}$ does not admit uniform substitution (Proposition 2.17), so some rules, e.g., the negation rules

¬I and RAA, are restricted to $\mathcal{ML}$-formulas. The soundness of the disjunction elimination rule requires that the undischarged assumptions in the subderivations are downward- and union-closed, and have the empty team property, hence the restriction of the undischarged assumptions in the subderivations to $\mathcal{ML}$-formulas.

The rules in Table 4.1 can all be found in [30]. Furthermore, the rules in Table 4.1 restricted to $\mathcal{ML}$-formulas form the standard system for classical propositional logic.

$$\dfrac{\begin{array}{c}[\alpha]\\ D_0\\ \bot\end{array}}{\neg\alpha}\,\neg\mathrm{I}_{(1)} \qquad \dfrac{\begin{array}{c}[\neg\alpha]\\ D_0\\ \bot\end{array}}{\alpha}\,\mathrm{RAA}_{(1)} \qquad \dfrac{\begin{array}{c}D_0\\ \alpha\end{array} \quad \begin{array}{c}D_1\\ \neg\alpha\end{array}}{\phi}\,\neg\mathrm{E}$$

$$\dfrac{\begin{array}{c}D\\ \phi\end{array}}{\phi\vee\psi}\,\vee\mathrm{I} \qquad \dfrac{\begin{array}{c}D\\ \psi\end{array}}{\phi\vee\psi}\,\vee\mathrm{I} \qquad \dfrac{\begin{array}{c}D\\ \phi\vee\psi\end{array} \quad \begin{array}{c}[\phi]\\ D_0\\ \chi\end{array} \quad \begin{array}{c}[\psi]\\ D_1\\ \chi\end{array}}{\chi}\,\vee\mathrm{E}_{(1)}$$

$$\dfrac{\begin{array}{c}D_0\\ \phi\end{array} \quad \begin{array}{c}D_1\\ \psi\end{array}}{\phi\wedge\psi}\,\wedge\mathrm{I} \qquad \dfrac{\begin{array}{c}D\\ \phi\wedge\psi\end{array}}{\phi}\,\wedge\mathrm{E} \qquad \dfrac{\begin{array}{c}D\\ \phi\wedge\psi\end{array}}{\psi}\,\wedge\mathrm{E}$$

(1) The undischarged assumptions in D_0 and D_1 are $\mathcal{ML}$-formulas.

Table 4.1: Rules for disjunction, conjunction and negation.

We say that ϕ and ψ are *provably equivalent*, denoted by $\phi \dashv\vdash \psi$, if $\phi \vdash \psi$ and $\psi \vdash \phi$. Next, we show some useful clauses using the rules in Table 4.1.

Proposition 4.1. *Let Γ_0 be a set of $\mathcal{ML}$-formulas. The following clauses are derivable.*

(i) *If $\phi \vdash \chi$, then $\phi \wedge \psi \vdash \chi \wedge \psi$*

(ii) *If $\Gamma_0, \phi \vdash \chi$, then $\Gamma_0, \phi \vee \psi \vdash \chi \vee \psi$*

(iii) $\phi \wedge \psi \dashv\vdash \psi \wedge \phi$

(iv) $\phi \vee \psi \dashv\vdash \psi \vee \phi$

(v) $(\phi \wedge \psi) \wedge \chi \dashv\vdash \phi \wedge (\psi \wedge \chi)$

(vi) $(\phi \vee \psi) \vee \chi \dashv\vdash \phi \vee (\psi \vee \chi)$

(vii) $\bot \vdash \phi$.

(viii) *If* $\Gamma_0, \psi \vdash \bot$, *then* $\Gamma_0, \psi \vee \phi \vdash \phi$.

(ix) $\vdash \top$.

Proof. Items (i)-(vi) are all derivable by the introduction and elimination rules for conjunction and disjunction. For item (vii), we derive $\bot \vdash \phi$ by $\neg$E and $\neg$I. For item (viii), we assume that $\Gamma_0, \psi \vdash \bot$, and use $\vee$E and item (vii) to derive $\Gamma_0, \psi \vee \phi \vdash \phi$. Recalling that $\top = \neg\bot$, we see that item (ix) is an instance of the rule $\neg$I. $\square$

$$\dfrac{\begin{array}{c} D \\ \neg\Box\alpha \end{array}}{\Diamond\neg\alpha}\,\Diamond\Box\text{Inter} \qquad \dfrac{\begin{array}{c} D \\ \Diamond\neg\alpha \end{array}}{\neg\Box\alpha}\,\Box\Diamond\text{Inter}$$

$$\dfrac{\begin{array}{c} [\phi] \\ D_0 \\ \psi \end{array} \quad \begin{array}{c} D_1 \\ \Diamond\phi \end{array}}{\Diamond\psi}\,\Diamond\text{Mon}_{(1)} \qquad \dfrac{\begin{array}{c} D \\ \Diamond(\phi \vee \psi) \end{array}}{\Diamond\phi \vee \Diamond\psi}\,\Diamond\vee\text{Distr}$$

$$\dfrac{\begin{array}{c} [\phi_1] \quad \cdots \quad [\phi_n] \\ D_0 \\ \ddots \vdots \cdot^{\cdot} \\ \psi \end{array} \quad \begin{array}{c} D_1 \\ \Box\phi_1 \end{array} \quad \cdots \quad \begin{array}{c} D_n \\ \Box\phi_n \end{array}}{\Box\psi}\,\Box\text{Mon}_{(1)}$$

(1) D_0 has no undischarged assumptions.

Table 4.2: Rules for diamond and box.

Table 4.2 includes rules for diamond and box. All rules, except for $\Diamond\vee$Distr, can be found in [29]. In Proposition 4.8 we show that the rules in Table 4.1 and 4.2, excluding $\Diamond\vee$Distr, completely axiomatize $\mathcal{ML}$. Restricted to classical formulas, $\Diamond\vee$Distr is derivable.

Next we define some clauses that are derivable by the rules in Table 4.1 and 4.2.

Proposition 4.2. *The following clauses are derivable.*

(i) $\Diamond(\phi \wedge \psi) \vdash \Diamond\phi \wedge \Diamond\psi$.

(ii) $\Diamond\phi \vee \Diamond\psi \dashv\vdash \Diamond(\phi \vee \psi)$.

(iii) $\Box\phi \vee \Box\psi \vdash \Box(\phi \vee \psi)$.

(iv) $\Box\phi \wedge \Box\psi \dashv\vdash \Box(\phi \wedge \psi)$.

Proof. For item (i), we derive $\Diamond(\phi \wedge \psi) \vdash \Diamond\phi$ and $\Diamond(\phi \wedge \psi) \vdash \Diamond\psi$ by $\Diamond$Mon. By $\wedge$I we conclude $\Diamond(\phi \wedge \psi) \vdash \Diamond\phi \wedge \Diamond\psi$. The left-to-right direction of item (ii) is derivable by $\vee$E, $\Diamond$Mon and $\vee$I. The right-to-left direction is by $\Diamond\vee$Distr. Item (iii) is derivable by $\vee$E, $\Box$Mon and $\vee$I. The left-to-right direction of item (iv) is derivable by $\Box$Mon and $\wedge$I, and the right-to-left direction is derivable by $\Box$Mon, $\wedge$E and $\wedge$I. $\Box$

We note that the opposite direction of items (i) and (iii) in Proposition 4.2 are not sound. We observe that $T \models \Diamond\phi \wedge \Diamond\psi$ implies that there are two (possibly different) teams S_1 and S_2 such that TRS_1 and TRS_2, with $S_1 \models \phi$ and $S_2 \models \psi$. But $T \models \Diamond(\phi \wedge \psi)$ requires that there exists a (single) team S such that TRS, that satisfies both ϕ and ψ. To see that $T \models \Box(\phi \vee \psi)$ does not imply $T \models \Box\phi \vee \Box\psi$, we give an example. Let $\Phi = \{p, q\}$ and let $K = (W, R, V)$ be a Kripke model with $W = \{w_1, w_2, w_3\}$, $R = \{(w_1, w_2), (w_1, w_3)\}$, $V(p) = \{w_2\}$, and $V(q) = \{w_3\}$. Let $T = \{w_1\}$ (see Figure 4.1 for a picture). Clearly $R[T] \models p \vee q$, but there are no subsets $T_1, T_2 \subseteq T$ such that $T_1 \cup T_2 = T$ with $R[T_1] \models p$ and $R[T_2] \models q$. Hence $T \models \Box(p \vee q)$ but $T \not\models \Box p \vee \Box q$.

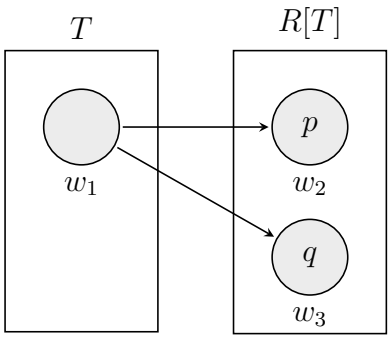

Figure 4.1

Let us now introduce rules relating to the inclusion atom. Let a, b and c (with or without indices) be sequences of $\mathcal{ML}$-formulas, and let x and y be sequences consisting

of the formulas $\top$ and $\bot$. We recall that $\alpha^{\top} = \alpha$ and $\alpha^{\bot} = \neg\alpha$. We also recall that a^{x} abbreviates the formula $\alpha_1^{x_1} \wedge \cdots \wedge \alpha_n^{x_n}$ for $\mathsf{a} = \langle \alpha_1, \ldots, \alpha_n \rangle$ and $\mathsf{x} = \langle x_1, \ldots, x_n \rangle$. Let $|\mathsf{a}|$ denote the length of the sequence a.

$$\dfrac{\begin{array}{c} D \\ \top \ldots \top \subseteq \alpha_1^{x_1} \ldots \alpha_n^{x_n} \end{array}}{x_1 \ldots x_n \subseteq \alpha_1 \ldots \alpha_n} \subseteq_{\bot\top}\mathrm{Exc} \qquad \dfrac{}{\mathsf{a} \subseteq \mathsf{a}} \subseteq\mathrm{Id}$$

$$\dfrac{\begin{array}{c} D \\ \mathsf{xy} \subseteq \mathsf{ab} \end{array}}{\mathsf{x} \subseteq \mathsf{a}} \subseteq\mathrm{Ctr} \qquad \dfrac{\begin{array}{c} D \\ \mathsf{a}_0\mathsf{a}_1 \subseteq \mathsf{b}_0\mathsf{b}_1 \end{array}}{\mathsf{a}_0\mathsf{a}_0\mathsf{a}_1 \subseteq \mathsf{b}_0\mathsf{b}_0\mathsf{b}_1} \subseteq\mathrm{Wk}$$

$$\dfrac{\begin{array}{c} D_0 \\ \alpha^x \end{array} \quad \begin{array}{c} D_1 \\ \mathsf{b} \subseteq \mathsf{c} \end{array}}{x\mathsf{b} \subseteq \alpha\mathsf{c}} \subseteq\mathrm{Exp} \qquad \dfrac{\begin{array}{c} D_0 \\ \neg\mathsf{a}^{\mathsf{x}} \end{array} \quad \begin{array}{c} D_1 \\ \mathsf{x} \subseteq \mathsf{a} \end{array}}{\phi} \subseteq_{\neg}\mathrm{E}$$

$$\dfrac{\begin{array}{c} D \\ \bigwedge_{\mathsf{x} \in \{\top,\bot\}^{|\mathsf{a}|}} (\neg\mathsf{a}^{\mathsf{x}} \vee \mathsf{x} \subseteq \mathsf{b}) \end{array}}{\mathsf{a} \subseteq \mathsf{b}} \subseteq\mathrm{Ext} \qquad \dfrac{\begin{array}{c} D \\ \mathsf{a} \subseteq \mathsf{b} \end{array}}{\neg\mathsf{a}^{\mathsf{x}} \vee \mathsf{x} \subseteq \mathsf{b}} \subseteq\mathrm{Rdt}$$

$$\dfrac{\begin{array}{c} D \\ (\phi \wedge \mathsf{x} \subseteq \mathsf{a}) \vee \psi \end{array} \quad \begin{array}{c} [\phi] \quad [\mathsf{x} \subseteq \mathsf{a}] \\ D_0 \\ \ddots \vdots \ddots \\ \chi \end{array} \quad \begin{array}{c} [\psi] \\ D_1 \\ \chi \end{array} \quad \begin{array}{c} [\phi \vee \psi] \quad [\mathsf{x} \subseteq \mathsf{a}] \\ D_2 \\ \ddots \vdots \ddots \\ \chi \end{array}}{\chi} \vee_{\subseteq}\mathrm{E}$$

$$\dfrac{\begin{array}{c} D_0 \\ \phi \vee \psi \end{array} \quad \begin{array}{c} D_1 \\ \mathsf{x}_1 \subseteq \mathsf{a}_1 \end{array} \quad \begin{array}{c} \cdots \\ \ldots \end{array} \quad \begin{array}{c} D_n \\ \mathsf{x}_n \subseteq \mathsf{a}_n \end{array}}{((\phi \vee \mathsf{a}_1^{\mathsf{x}_1} \vee \cdots \vee \mathsf{a}_n^{\mathsf{x}_n}) \wedge \mathsf{x}_1 \subseteq \mathsf{a}_1 \wedge \cdots \wedge \mathsf{x}_n \subseteq \mathsf{a}_n) \vee \psi} \subseteq\mathrm{Distr}$$

Table 4.3: Rules for inclusion.

All the rules from Table 4.3 are adapted from [30], except for the rule $\subseteq_{\bot\top}$Exc. This rule will be used to derive primitive inclusion atoms from formulas in the normal form, which only contain top inclusion atoms. The other direction of $\subseteq_{\bot\top}$Exc is also sound, and we show that it is derivable in Proposition 4.22 (i). The rule $\subseteq_{\neg}$E captures that $\mathsf{x} \subseteq \mathsf{a} \wedge \neg\mathsf{a}^{\mathsf{x}}$ is a contradiction, since (for a nonempty team) $\mathsf{x} \subseteq \mathsf{a}$ implies that a^{x} is true somewhere in the team (see Lemma 3.30), while $\neg\mathsf{a}^{\mathsf{x}}$ implies that a^{x} is not true anywhere in the team. The rules $\subseteq$Ext, $\subseteq$Rdt and $\subseteq$Ctr let us reduce an arbitrary inclusion atom to

an equivalent formula where all non-classical subformulas are primitive inclusion atoms.

The rule $\vee_{\subseteq}$E captures the semantic fact that if a nonempty team satisfies the formula $(\phi \wedge \mathsf{x} \subseteq \mathsf{a}) \vee \psi$, then either the whole team satisfies either of the disjuncts, or there are nonempty subteams that satisfy each disjunct. If the left disjunct is satisfied by a nonempty subteam, since primitive inclusion atoms are upwards closed, it follows that the inclusion atom is true in the whole team. The opposite direction of the previously mentioned semantic fact is not sound. This is because $(\phi \vee \psi) \wedge \mathsf{x} \subseteq \mathsf{a} \not\models (\phi \wedge \mathsf{x} \subseteq \mathsf{a}) \vee \psi$, which we show with an example. Let $\Phi = \{p, q\}$ and let $K = (W, R, V)$ be a Kripke model with $W = \{w_1, w_2\}$, $R = \emptyset$, $V(p) = \{w_1\}$, $V(q) = \{w_2\}$. Let $T = W$ (see Figure 4.2 for a picture). Clearly $T \models (p \vee q) \wedge \top \subseteq q$, but $T \not\models (p \wedge \top \subseteq q) \vee q$. However, $(\phi \vee \psi) \wedge \mathsf{x} \subseteq \mathsf{a} \models ((\phi \vee \mathsf{a}^{\mathsf{x}}) \wedge \mathsf{x} \subseteq \mathsf{a}) \vee \psi$ holds, which is an instance of the rule $\subseteq$Distr.

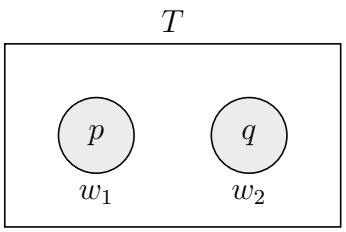

Figure 4.2

It is shown in [4] that the implication problem of inclusion dependencies is completely axiomatizable by the rule $\subseteq$Id together with the rules $\subseteq$Trs and $\subseteq$Proj:

$$\dfrac{\begin{array}{c}D_0\\ \mathsf{a} \subseteq \mathsf{b}\end{array} \quad \begin{array}{c}D_1\\ \mathsf{b} \subseteq \mathsf{c}\end{array}}{\mathsf{a} \subseteq \mathsf{c}}\ \subseteq\text{Trs} \qquad \dfrac{\begin{array}{c}D\\ \alpha_1 \ldots \alpha_n \subseteq \beta_1 \ldots \beta_n\end{array}}{\alpha_{i_1} \ldots \alpha_{i_m} \subseteq \beta_{i_1} \ldots \beta_{i_m}}\ \subseteq\text{Proj},$$

where $i_1, \ldots, i_m$ are distinct indices from $\{1, \ldots, n\}$. We show in Proposition 4.3 that the rule $\subseteq$Trs is derivable from the rules in Tables 4.1 and 4.3, and in Proposition 4.22 (iii) that the rule $\subseteq$Proj is derivable in our system.

Next we show that some clauses regarding inclusion atoms are derivable. In particular, the transitivity rule for inclusion atoms from [30] is derivable. Let $\top^n$ be a sequence of length n consisting of top atoms.

Proposition 4.3. *The following clauses are derivable.*

(i) $\alpha_1, \ldots, \alpha_n \vdash \top^n \subseteq \alpha_1 \ldots \alpha_n$.

(ii) If $\alpha_i \vdash \beta_i$, *then* $\top^n \subseteq \alpha_1 \ldots \alpha_n \vdash \top^n \subseteq \alpha_1 \ldots \beta_i \ldots \alpha_n$, *where* $i \in \{1, \ldots, n\}$.

(iii) $\mathsf{a} \subseteq \mathsf{b}, \mathsf{b} \subseteq \mathsf{c} \vdash \mathsf{a} \subseteq \mathsf{c}$.

Proof. (i) Derivable by $\subseteq$Id, $\subseteq$Exp and $\subseteq$Ctr.

(ii) By classical rules, we derive $\vdash \neg(\alpha_1 \wedge \cdots \wedge \alpha_n) \vee (\alpha_1 \wedge \cdots \wedge \alpha_n)$. From the assumption $\alpha_i \vdash \beta_i$ together with Proposition 4.1 (i), item (i) and $\subseteq$Id we have that $\alpha_1 \wedge \cdots \wedge \alpha_n \vdash \alpha_1 \wedge \cdots \wedge \beta_i \wedge \cdots \wedge \alpha_n \vdash (\top^n \subseteq \alpha_1 \ldots \beta_i \ldots \alpha_n) \wedge \top$. By Proposition 4.1 (ii) we have that $\neg(\alpha_1 \wedge \cdots \wedge \alpha_n) \vee (\alpha_1 \wedge \cdots \wedge \alpha_n) \vdash \neg(\alpha_1 \wedge \cdots \wedge \alpha_n) \vee ((\top^n \subseteq \alpha_1 \ldots \beta_i \ldots \alpha_n) \wedge \top)$. By $\vee_{\subseteq}$E, it suffices to show that

(a) $\top^n \subseteq \alpha_1 \ldots \alpha_n, \neg(\alpha_1 \wedge \cdots \wedge \alpha_n) \vdash \top^n \subseteq \alpha_1 \ldots \beta_i \ldots \alpha_n$,

(b) $\top^n \subseteq \alpha_1 \ldots \alpha_n, \top, \top^n \subseteq \alpha_1 \ldots \beta_i \ldots \alpha_n \vdash \top^n \subseteq \alpha_1 \ldots \beta_i \ldots \alpha_n$,

(c) $\top^n \subseteq \alpha_1 \ldots \alpha_n, \neg(\alpha_1 \wedge \cdots \wedge \alpha_n) \vee \top, \top^n \subseteq \alpha_1 \ldots \beta_i \ldots \alpha_n \vdash \top^n \subseteq \alpha_1 \ldots \beta_i \ldots \alpha_n$.

Condition (a) follows from $\subseteq_{\neg}$E, and conditions (b) and (c) are trivial.

(iii) By $\subseteq$Ext, we need to derive $\neg \mathsf{a}^{\mathsf{x}} \vee \mathsf{x} \subseteq \mathsf{c}$ for all $\mathsf{x} \in \{\top, \bot\}^{|\mathsf{a}|}$. First, we derive $\mathsf{a} \subseteq \mathsf{b} \vdash \neg \mathsf{a}^{\mathsf{x}} \vee \mathsf{x} \subseteq \mathsf{b}$ and $\mathsf{b} \subseteq \mathsf{c} \vdash \neg \mathsf{b}^{\mathsf{x}} \vee \mathsf{x} \subseteq \mathsf{c}$ by $\subseteq$Rdt. We have that $\neg \mathsf{a}^{\mathsf{x}} \vee \mathsf{x} \subseteq \mathsf{b} \vdash \neg \mathsf{a}^{\mathsf{x}} \vee (\top \wedge \mathsf{x} \subseteq \mathsf{b})$ and $\neg \mathsf{b}^{\mathsf{x}} \vee \mathsf{x} \subseteq \mathsf{c} \vdash \neg \mathsf{b}^{\mathsf{x}} \vee (\top \wedge \mathsf{x} \subseteq \mathsf{c})$, so by $\vee_{\subseteq}$E it suffices to show that

(a) $\neg \mathsf{b}^{\mathsf{x}} \vee (\top \wedge \mathsf{x} \subseteq \mathsf{c}), \neg \mathsf{a}^{\mathsf{x}} \vdash \neg \mathsf{a}^{\mathsf{x}} \vee \mathsf{x} \subseteq \mathsf{c}$

(b) $\neg \mathsf{b}^{\mathsf{x}} \vee (\top \wedge \mathsf{x} \subseteq \mathsf{c}), \mathsf{x} \subseteq \mathsf{b} \vdash \neg \mathsf{a}^{\mathsf{x}} \vee \mathsf{x} \subseteq \mathsf{c}$,

since it would imply

$$\neg \mathsf{b}^{\mathsf{x}} \vee (\top \wedge \mathsf{x} \subseteq \mathsf{c}), \top, \mathsf{x} \subseteq \mathsf{b} \vdash \neg \mathsf{a}^{\mathsf{x}} \vee \mathsf{x} \subseteq \mathsf{c}, \qquad (b)$$
$$\neg \mathsf{b}^{\mathsf{x}} \vee (\top \wedge \mathsf{x} \subseteq \mathsf{c}), \neg \mathsf{a}^{\mathsf{x}} \vdash \neg \mathsf{a}^{\mathsf{x}} \vee \mathsf{x} \subseteq \mathsf{c}, \qquad (a)$$
$$\neg \mathsf{b}^{\mathsf{x}} \vee (\top \wedge \mathsf{x} \subseteq \mathsf{c}), \top \vee \neg \mathsf{a}^{\mathsf{x}}, \mathsf{x} \subseteq \mathsf{b} \vdash \neg \mathsf{a}^{\mathsf{x}} \vee \mathsf{x} \subseteq \mathsf{c}. \qquad (b)$$

Condition (a) follows by $\vee$I. By the rule $\vee_{\subseteq}$E, condition (b) reduces to showing the following clauses.

$$\mathsf{x} \subseteq \mathsf{b}, \mathsf{x} \subseteq \mathsf{c}, \top \vdash \neg \mathsf{a}^{\mathsf{x}} \vee \mathsf{x} \subseteq \mathsf{c}, \qquad (\vee I)$$
$$\mathsf{x} \subseteq \mathsf{b}, \neg \mathsf{b}^{\mathsf{x}} \vdash \neg \mathsf{a}^{\mathsf{x}} \vee \mathsf{x} \subseteq \mathsf{c}, \qquad (\subseteq_{\neg} E)$$
$$\mathsf{x} \subseteq \mathsf{b}, \mathsf{x} \subseteq \mathsf{c}, \top \vee \neg \mathsf{b}^{\mathsf{x}} \vdash \neg \mathsf{a}^{\mathsf{x}} \vee \mathsf{x} \subseteq \mathsf{c}. \qquad (\vee I)$$

□

$$\dfrac{\begin{array}{c}D\\ \Diamond(\mathsf{x} \subseteq \mathsf{a})\end{array}}{\top \subseteq \Diamond \mathsf{a}^{\mathsf{x}}}\ \Diamond_{\subseteq}\mathrm{Distr} \qquad \dfrac{\begin{array}{c}D_0\\ \Diamond\phi\end{array} \quad \begin{array}{c}D_1\\ \bigwedge_{i\in I}(x_i \subseteq \Diamond\alpha_i)\end{array}}{\Diamond((\phi \vee \bigvee_{i\in I} \alpha_i^{x_i}) \wedge \bigwedge_{i\in I}(x_i \subseteq \alpha_i))}\ \subseteq_{\Diamond}\mathrm{Distr}$$

$$\dfrac{\begin{array}{c}D_0\\ \top \subseteq \Diamond\beta\end{array} \quad \begin{array}{c}D_1\\ \Box(\mathsf{x} \subseteq \mathsf{a})\end{array}}{\top \subseteq \Diamond \mathsf{a}^{\mathsf{x}}}\ \Box\Diamond_{\subseteq}\mathrm{Exc} \qquad \dfrac{\begin{array}{c}D\\ \top \subseteq \Diamond \mathsf{a}^{\mathsf{x}}\end{array}}{\Box(\mathsf{x} \subseteq \mathsf{a})}\ \Diamond\Box_{\subseteq}\mathrm{Exc}$$

$$\dfrac{\begin{array}{c}D\\ \Box((\phi \wedge \mathsf{x} \subseteq \mathsf{a}) \vee \psi)\end{array} \quad \begin{array}{c}[\Box\phi]\\ D_0\\ \ddots\ \vdots\ \iddots\\ \chi\end{array} \quad \begin{array}{c}[\top \subseteq \Diamond \mathsf{a}^{\mathsf{x}}]\\ [\Box\psi]\\ D_1\\ \chi\end{array} \quad \begin{array}{c}[\Box(\phi \vee \psi)]\\ [\top \subseteq \Diamond \mathsf{a}^{\mathsf{x}}]\\ D_2\\ \ddots\ \vdots\ \iddots\\ \chi\end{array}}{\chi}\ \Box\vee_{\subseteq}\mathrm{E}$$

Table 4.4: Rules for modal operators and inclusion.

The rule $\Diamond_{\subseteq}$Distr allows us to distribute diamond over the inclusion atom. The converse direction of the rule $\Diamond_{\subseteq}$Distr is not sound, which we illustrate with an example. Let $\Phi = \{p\}$ and let $K = (W, R, V)$ be a Kripke model with $W = \{w_1, w_2, w_3\}$, $R = \{(w_2, w_3)\}$ and $V(p) = \{w_3\}$. Let $T = \{w_1, w_2\}$. Clearly, $T \models \top \subseteq \Diamond p$. But there is no successor team $S \subseteq R[T]$ such that TRS, so $T \not\models \Diamond(\top \subseteq p)$. See Figure 4.3 for a picture of the example.

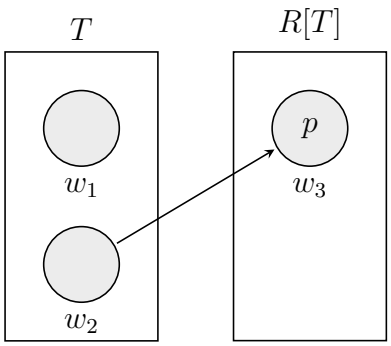

Figure 4.3

Instead, we add the rule $\subseteq_{\Diamond}$Distr, which then allows us to derive the opposite direction

of $\Diamond_{\subseteq}$Distr, with any diamond formula as an additional assumption:

$$\begin{aligned} \Diamond\phi, \top \subseteq \Diamond\mathsf{a}^{\mathsf{x}} &\vdash \Diamond((\phi \vee (\mathsf{a}^{\mathsf{x}})^{\top}) \wedge \top \subseteq \mathsf{a}^{\mathsf{x}}) && (\subseteq_{\Diamond} Distr) \\ &\vdash \Diamond(\top \subseteq \mathsf{a}^{\mathsf{x}}). && (\Diamond Mon, \wedge E) \end{aligned}$$

The rule $\Diamond\Box_{\subseteq}$Exc allows us to derive a box formula from a top inclusion formula with a diamond formula on the right. The opposite direction of the rule $\Diamond\Box_{\subseteq}$Exc is not sound. Let $\Phi = \emptyset$ and let $K = (W, R, V)$ be a Kripke model with $W = \{u\}$, $V = \emptyset$ and $R = \emptyset$. Let $T = \{u\}$. Now T is a nonempty team such that $R[T] = \emptyset$. Let $\alpha \in \mathcal{MIL}$. By the empty team property, $T \models \Box(\top \subseteq \alpha)$. But $T \not\models \top \subseteq \Diamond\alpha$, since u has no accessible state. Adding the formula $\top \subseteq \Diamond\beta$ as an assumption for this direction (forming the rule $\Box\Diamond_{\subseteq}$Exc) guarantees that whenever a nonempty team satisfies the box formula, $R[T]$ is nonempty as well.

The rule $\Box\vee_{\subseteq}$E is similar to $\vee_{\subseteq}$E in Table 4.3, but applies to box formulas.

Proposition 4.4. *The following clause about diamond and inclusion holds:*

$$\Diamond \bigvee_{i\in I} \alpha_i \wedge \bigwedge_{i\in I}(\top \subseteq \Diamond\alpha_i) \dashv\vdash \Diamond(\bigvee_{i\in I} \alpha_i \wedge \bigwedge_{i\in I}(\top \subseteq \alpha_i)).$$

Proof. We make the derivations.

($\vdash$)

$$\begin{aligned} \Diamond \bigvee_{i\in I} \alpha_i, \bigwedge_{i\in I}(\top \subseteq \Diamond\alpha_i) &\vdash \Diamond((\bigvee_{i\in I} \alpha_i \vee \bigvee_{i\in I} \alpha_i) \wedge \bigwedge_{i\in I}(\top \subseteq \alpha_i)) && (\subseteq_{\Diamond} Distr) \\ &\vdash \Diamond(\bigvee_{i\in I} \alpha_i \wedge \bigwedge_{i\in I}(\top \subseteq \alpha_i)). && (\Diamond Mon) \end{aligned}$$

($\dashv$)

$$\begin{aligned} \Diamond(\bigvee_{i\in I} \alpha_i \wedge \bigwedge_{i\in I}(\top \subseteq \alpha_i) &\vdash \Diamond \bigvee_{i\in I} \alpha_i \wedge \bigwedge_{i\in I} \Diamond(\top \subseteq \alpha_i) && (\text{Prop. 4.2 (i)}) \\ &\vdash \Diamond \bigvee_{i\in I} \alpha_i \wedge \bigwedge_{i\in I}(\top \subseteq \Diamond\alpha_i). && (\Diamond_{\subseteq} Distr) \end{aligned}$$

□

Definition 4.5. The proof system for $\mathcal{MIL}$ consists of all axioms and rules presented in Tables 4.1-4.4.

4.1.2 Soundness

This subsection is dedicated to proving that our proof system for $\mathcal{MIL}$ is sound, i.e., that for a set Γ of $\mathcal{MIL}$-formulas, we can only derive $\Gamma \vdash \phi$ when $\Gamma \models \phi$. As a consequence we get that our system for $\mathcal{MIL}$ has a subsystem that, restricted to classical formulas, is complete.

Theorem 4.6 (Soundness)**.** *Let $\Gamma \cup \{\phi\}$ be a set of $\mathcal{MIL}$-formulas. If $\Gamma \vdash \phi$, then $\Gamma \models \phi$.*

Proof. All rules in Table 4.1 and Table 4.2 have straightforward soundness proofs. Based on Lemma 3.31 and Lemma 3.32, we have that the following rules in Table 4.3 are sound: $\subseteq$Ext, $\subseteq$Rdt and $\subseteq$Ctr. The more involved soundness proofs for the rules in Table 4.3 and Table 4.4 are shown next.

($\subseteq$Distr) Suppose that $T \models \mathsf{x}_i \subseteq \mathsf{a}_i$ for all $i = 1, \ldots, n$ and $T \models \phi \vee \psi$. We want to show $T \models ((\phi \vee \mathsf{a}_1^{\mathsf{x}_1} \vee \cdots \vee \mathsf{a}_n^{\mathsf{x}_n}) \wedge \mathsf{x}_1 \subseteq \mathsf{a}_1 \wedge \cdots \wedge \mathsf{x}_n \subseteq \mathsf{a}_n) \vee \psi$. If $T = \emptyset$ then the result follows by the empty team property. Suppose that $T \neq \emptyset$ then there are subteams $T_1, T_2 \subseteq T$ such that $T_1 \cup T_2 = T$ and $T_1 \models \phi$ and $T_2 \models \psi$. Since $T \models \mathsf{x}_i \subseteq \mathsf{a}_i$ for all $i = 1, \ldots, n$, it follows from Lemma 3.30 that for every $i = 1, \ldots, n$ there is a $v_i \in T$ such that $v_i \models \mathsf{a}_i^{\mathsf{x}_i}$. Consider the team $T_1' = \{v_1, \ldots, v_n\} \cup T_1$, clearly $T_1' \models \phi \vee \mathsf{a}_1^{\mathsf{x}_1} \vee \cdots \vee \mathsf{a}_n^{\mathsf{x}_n}$ and $T_1' \models \mathsf{x}_1 \subseteq \mathsf{a}_1 \wedge \cdots \wedge \mathsf{x}_n \subseteq \mathsf{a}_n$. Since $T_1' \cup T_2 = T$, we get that $T \models ((\phi \vee \mathsf{a}_1^{\mathsf{x}_1} \vee \cdots \vee \mathsf{a}_n^{\mathsf{x}_n}) \wedge \mathsf{x}_1 \subseteq \mathsf{a}_1 \wedge \cdots \wedge \mathsf{x}_n \subseteq \mathsf{a}_n) \vee \psi$, as desired.

($\Diamond_{\subseteq}$Distr) Suppose that $T \models \Diamond(\mathsf{x} \subseteq \mathsf{a})$, then there is a successor team S such that TRS and $S \models \mathsf{x} \subseteq \mathsf{a}$. We show that $T \models \top \subseteq \Diamond\mathsf{a}^{\mathsf{x}}$. If $T = \emptyset$, then the result follows by the empty team property. Suppose that $T \neq \emptyset$. Then S is nonempty, so by Lemma 3.30 there is some $v \in S$ such that $v \models \mathsf{a}^{\mathsf{x}}$. Since $v \in S$ and TRS, it follows that there is some $w \in T$ such that wRv. Now $w \models \Diamond\mathsf{a}^{\mathsf{x}}$, so $T \models \top \subseteq \Diamond\mathsf{a}^{\mathsf{x}}$.

($\subseteq_{\Diamond}$Distr) We show that $\Diamond\phi \wedge \bigwedge_{i \in I}(x_i \subseteq \Diamond\mathsf{a}_i) \models \Diamond((\phi \vee \bigvee_{i \in I} \alpha_i^{x_i}) \wedge \bigwedge_{i \in I}(x_i \subseteq \alpha_i))$. If the index set I is empty, then the assumption and conclusion are semantically equivalent. Suppose that I is nonempty and that $T \models \Diamond\phi \wedge \bigwedge_{i \in I}(x_i \subseteq \Diamond\mathsf{a}_i)$. Then there is a team S such that TRS and $S \models \phi$. If $T = \emptyset$, then the result follows by the empty team property. Suppose that $T \neq \emptyset$. By the assumption $T \models \bigwedge_{i \in I}(x_i \subseteq \Diamond\alpha_i)$, it follows that for each $i \in I$, $T \models x_i \subseteq \Diamond\alpha_i$. If $x_i = \top$, then it follows that there is some $v \in R[T]$ such that $v \models \alpha_i$. If $x_i = \bot$, then by Lemma 3.30 there is some state $w_i \in T$ such that $w_i \models \neg\Diamond\alpha_i$, i.e., $w_i \models \Box\neg\alpha_i$. By TRS there is a state $v \in R[T]$ such that w_iRv, and since $w_i \models \Box\neg\alpha_i$, we have that $v \models \neg\alpha_i$. Therefore, for each $i \in I$ there is some $v \in R[T]$ such that $v \models \alpha_i^{\mathsf{x}_i}$.

Define a team

$$S' = S \cup \{v \in R[T] \mid v \models \alpha_i^{x_i} \text{ for some } i \in I\}.$$

Clearly $S' \models \phi \vee \bigvee_{i\in I} \alpha_i^{x_i}$. Also $S' \models \bigwedge_{i\in I}(x_i \subseteq \alpha_i)$. Therefore $S' \models (\phi \vee \bigvee_{i\in I} \alpha_i^{x_i}) \wedge \bigwedge_{i\in I}(x_i \subseteq \alpha_i)$. Since $S \subseteq S' \subseteq R[T]$ and TRS, we have that TRS', so $T \models \Diamond((\phi \vee \bigvee_{i\in I} \alpha_i^{x_i}) \wedge \bigwedge_{i\in I}(x_i \subseteq \alpha_i))$.

($\Box\Diamond_{\subseteq}$Exc) Suppose that $T \models \top \subseteq \Diamond\beta$ and that $T \models \Box(\mathsf{x} \subseteq \mathsf{a})$. We show that $T \models \top \subseteq \Diamond\mathsf{a}^{\mathsf{x}}$. If $T = \emptyset$, then the rule is sound by the empty team property. Let $T \neq \emptyset$, then there is a $w \in T$ with wRv and $v \models \beta$. So $R[T] \neq \emptyset$. Now $\emptyset \neq R[T] \models \mathsf{x} \subseteq \mathsf{a}$, and by Lemma 3.30 there is some $v' \in R[T]$ such that $v' \models \mathsf{a}^{\mathsf{x}}$. Then there is some $w' \in T$ such that $w'Rv'$ and $w' \models \Diamond\mathsf{a}^{\mathsf{x}}$. Therefore $T \models \top \subseteq \Diamond\mathsf{a}^{\mathsf{x}}$.

($\Diamond\Box_{\subseteq}$Exc) Let $T \models \top \subseteq \Diamond\mathsf{a}^{\mathsf{x}}$. We show that $T \models \Box(\mathsf{x} \subseteq \mathsf{a})$. If $T = \emptyset$, then soundness follows from the empty team property. Suppose that T is nonempty, then by Lemma 3.30 there is a $w \in T$ such that $w \models \Diamond\mathsf{a}^{\mathsf{x}}$. It follows that there is a $v \in R[T]$ such that wRv and $v \models \mathsf{a}^{\mathsf{x}}$, from which $R[T] \models \mathsf{x} \subseteq \mathsf{a}$ follows by Lemma 3.30. Hence $T \models \Box(\mathsf{x} \subseteq \mathsf{a})$.

($\Box\vee_{\subseteq}$E) Finally, we show that the rule $\Box\vee_{\subseteq}$E is sound. The soundness for $\vee_{\subseteq}$E in Table 4.3 can be shown in a similar way.

Let Γ consist of $\mathcal{MIL}$-formulas. Suppose that $\Gamma, \Box\phi, \top \subseteq \Diamond\mathsf{a}^{\mathsf{x}} \models \chi$ and $\Gamma, \Box\psi \models \chi$, as well as $\Gamma, \Box(\phi \vee \psi), \top \subseteq \Diamond\mathsf{a}^{\mathsf{x}} \models \chi$. Let $T \models \Box((\phi \wedge \mathsf{x} \subseteq \mathsf{a}) \vee \psi)$ and $T \models \gamma$ for all $\gamma \in \Gamma$. Then $R[T] \models (\phi \wedge \mathsf{x} \subseteq \mathsf{a}) \vee \psi$, so there are subsets $T_1, T_2 \subseteq R[T]$ such that $T_1 \cup T_2 = R[T]$ and $T_1 \models \phi \wedge \mathsf{x} \subseteq \mathsf{a}$ and $T_2 \models \psi$. We show that $T \models \chi$.

> We have three cases, either $T_1 = \emptyset$, $T_2 = \emptyset$ or both T_1 or T_2 are nonempty. If $T_1 = \emptyset$, then $T_2 = R[T]$. Now $R[T] \models \psi$, so $T \models \Box\psi$. We assumed that $\Gamma, \Box\psi \models \chi$, thus $T \models \chi$ follows.
>
> If $T_2 = \emptyset$, then $T_1 = R[T]$ so $R[T] \models \phi \wedge \mathsf{x} \subseteq \mathsf{a}$. Clearly $T \models \Box\phi$. Also $T \models \Box(\mathsf{x} \subseteq \mathsf{a})$. First, let us assume that $R[T]$ is nonempty, then by Lemma 3.30 there is a $v \in R[T]$ such that $v \models \mathsf{a}^{\mathsf{x}}$, from which it follows that $T \models \top \subseteq \Diamond\mathsf{a}^{\mathsf{x}}$. Since we assumed that $\Gamma, \Box\phi, \top \subseteq \Diamond\mathsf{a}^{\mathsf{x}} \models \chi$, it follows that $T \models \chi$. If $R[T]$ is empty, then by the empty team property, $R[T] \models \psi$, hence $T \models \Box\psi$. We assumed that $\Gamma, \Box\psi \models \chi$, so we conclude $T \models \chi$.
>
> If both T_1 and T_2 are nonempty, then from $T_1 \models \mathsf{x} \subseteq \mathsf{a}$ and Lemma 3.30 it follows that there is some $v \in T_1$ such that $v \models \mathsf{a}^{\mathsf{x}}$. Therefore there is a $w \in T$ with wRv such that $w \models \Diamond\mathsf{a}^{\mathsf{x}}$. By definition $T \models \top \subseteq \Diamond\mathsf{a}^{\mathsf{x}}$. Clearly $T_1 \cup T_2 \models \phi \vee \psi$, i.e., $R[T] \models \phi \vee \psi$, so $T \models \Box(\phi \vee \psi)$. We assumed that $\Gamma, \Box(\phi \vee \psi), \top \subseteq \Diamond\mathsf{a}^{\mathsf{x}} \models \chi$, thus $T \models \chi$.

$\Box$

4.1.3 Properties of the proof system restricted to $\mathcal{ML}$-formulas

In this subsection, we show that the proof system for $\mathcal{MIL}$ restricted to classical formulas is complete: For any set of $\mathcal{ML}$-formulas $\Gamma \cup \alpha$, if $\Gamma \models \alpha$ then $\Gamma \vdash \alpha$. This shows that the proof system for $\mathcal{MIL}$ is a conservative extension of the classical proof system for $\mathcal{ML}$.

First, we recall the definition of the Hilbert-style system **K**, which is complete for the class of all Kripke frames under the usual single-state semantics (see, e.g., [3]).

Definition 4.7. The Hilbert-style system of classical modal logic **K** consists of the axioms 1-3 and the rules 4-6.

1. All axioms of propositional logic.
2. K: $\Box(\alpha \to \beta) \to (\Box\alpha \to \Box\beta)$.
3. Dual: $\Diamond\alpha \leftrightarrow \neg\Box\neg\alpha$.
4. Modus Ponens: $\alpha, \alpha \to \beta / \beta$.
5. Necessitation: $\alpha / \Box\alpha$.
6. Uniform Substitution: $\alpha / \alpha(\beta/p)$.

Restricted to classical formulas, the rules in Table 4.1, together with the rules $\Diamond\Box$Inter, $\Box\Diamond$Inter, $\Diamond$Mon and $\Box$Mon from Table 4.2, form a complete proof system for $\mathcal{ML}$. We also call this subsystem $\mathcal{ML}$. It is shown in [29] that the natural deduction proof system $\mathcal{ML}$ simulates the Hilbert-style system **K**.

Proposition 4.8. *Let the proof system $\mathcal{ML}$ consist of all rules from Table 4.1 and the rules $\Diamond\Box$Inter, $\Box\Diamond$Inter, $\Diamond$Mon and $\Box$Mon from Table 4.2. Let $\Gamma \cup \{\alpha\}$ consist of classical formulas. Then*

$$\Gamma \vdash_{\boldsymbol{K}} \alpha \iff \Gamma \vdash_{\mathcal{ML}} \alpha.$$

Proof. For the left-to-right direction, we prove that the rules and axioms of **K** are derivable in the system $\mathcal{ML}$. Restricted to classical formulas, the modus ponens rule, interpreted as $\alpha, \neg\alpha \vee \beta \vdash \beta$, and the uniform substitution rule are easily derivable. The necessitation rule is derivable by $\Box$Mon.

The propositional axioms of **K** are derivable by the rules in Table 4.1. We show that the axioms of **K** with modalities also are derivable. An equivalent version of the **K** axiom is $\Box(\alpha \wedge \beta) \dashv\vdash \Box\alpha \wedge \Box\beta$, which is derivable by $\Box$Mon. The inter-definabilty of $\Box$ and $\Diamond$, $\Diamond\alpha \dashv\vdash \neg\Box\neg\alpha$, is a special case of $\Diamond\Box$Inter, $\Box\Diamond$Inter and $\Diamond$Mon.

For the right-to-left direction, we assume that $\Gamma \vdash_{\mathcal{ML}} \alpha$. By Theorem 4.6, $\mathcal{ML}$ is sound. Thus $\Gamma \models \alpha$ (over teams), from which it follows by Corollary 2.11, that $\Gamma \models \alpha$ (over states). Since the system **K** is complete for single state $\mathcal{ML}$, we conclude $\Gamma \vdash_{\mathbf{K}} \alpha$. $\Box$

Next we show a result about the relationship between team semantics, single-state semantics and derivations using the systems $\mathcal{ML}$ and $\mathcal{MIL}$ over classical formulas. We obtain the result using soundness of our system for $\mathcal{MIL}$ and the fact that it has a

subsystem $\mathcal{ML}$ that is complete with respect to classical formulas, as seen in Proposition 4.8.

Lemma 4.9. *Let $\Gamma \cup \{\alpha\}$ be a set of $\mathcal{ML}$-formulas. Then*

$$\Gamma \models \alpha \text{ (over teams)} \iff \Gamma \models \alpha \text{ (over states)} \iff \Gamma \vdash_{\mathcal{ML}} \alpha \iff \Gamma \vdash_{\mathcal{MIL}} \alpha.$$

Proof. The first equivalence is due to Corollary 2.11. The second equivalence is due to soundness and completeness of the system **K**, together with Proposition 4.8. The left-to-right direction of the last equivalence is due to the fact that all rules from the complete proof system for $\mathcal{ML}$ are included in the system for $\mathcal{MIL}$. The right-to-left direction of the last equivalence is due to the following implications:

$$\begin{aligned}
\Gamma \vdash_{\mathcal{MIL}} \alpha &\implies \Gamma \models \alpha \quad \text{(over teams)} && \text{(Soundness of } \mathcal{MIL}\text{)}\\
&\implies \Gamma \models \alpha \quad \text{(over states)} && \text{(Proposition 2.11)}\\
&\implies \Gamma \vdash_{\mathbf{K}} \alpha && \text{(Completeness of } \mathbf{K}\text{)}\\
&\implies \Gamma \vdash_{\mathcal{ML}} \alpha. && \text{(Proposition 4.8)}
\end{aligned}$$

□

As a consequence of the previous lemma, we get the following result: If two pointed Φ-models are k-bisimilar, then their respective Hintikka formulas are provably equivalent.

Lemma 4.10. *Let Φ be a set of propositional symbols and let (K, w) and (M, u) be pointed Φ-models. Then*

$$K, w \leftrightarrows_k M, u \implies \chi^k_{K,w} \equiv \chi^k_{M,u} \implies \chi^k_{K,w} \dashv\vdash \chi^k_{M,u}.$$

Proof. The first implication is by Theorem 3.8, the second by Lemma 4.9. □

4.2 Completeness

In this section, we prove that the proof system for $\mathcal{MIL}$ is complete. Together with the fact that the proof system for $\mathcal{MIL}$ is sound, we can then conclude that we have axiomatized the logic. The results in this section are essentially due to [30].

In the first subsection we prove some technical lemmas that will be used in the completeness proof. We also give the proof of the completeness theorem, using compactness of $\mathcal{MIL}$ and assuming the provable equivalence of the normal form. We dedicate the second subsection to the proof of the provable equivalence of the normal form.

4.2.1 Completeness theorem

The main result of this subsection is the proof of the completeness theorem. We first prove three lemmas that will be used in the proof of the completeness theorem, and claim that the provable equivalence of the normal form holds. We postpone the proof of the provable equivalence of the normal form.

In both Lemma 4.16 and the completeness theorem, we will make use of *disjoint unions* over Kripke models with teams. We therefore recall isomorphism for Kripke models, to then define the disjoint union over Kripke models (with teams).

Definition 4.11. Let Φ be a set of propositional symbols and let K and K' be Kripke models. Then K and K' are isomorphic if there is a bijection $f : K \to K'$ such that:

(i) For each $p \in \Phi$ and $w \in K$: $w \in V(p)$ if and only if $f(w) \in V'(p)$.

(ii) For all $w, v \in K$: wRv if and only if $f(w)R'f(v)$.

We say that Kripke models K_i with domains W_i, $i \in I$ for some index set I, are *pairwise disjoint* if W_i and W_j are disjoint for any $i \neq j$, where $i, j \in I$.

Next we define the disjoint union over Kripke models, in which we first take isomorphic copies of the models such that the copies are pairwise disjoint, and then we take the union over the isomorphic copies.

Definition 4.12. The disjoint union of the Kripke models K_i, where $i \in I$ for some index set I, is the Kripke model $\biguplus_{i\in I} K_i = (\biguplus_{i\in I} W^i, R, V)$, where $\biguplus_{i\in I} W_i = \bigcup_{i\in I}(W_i \times \{i\})$, $(w_0, i_0)R(w_1, i_1)$ iff $i_0 = i_1 = i$ and $w_0 R_i w_1$, and $V(p) = \biguplus_{i\in I} V_i(p) = \bigcup_{i\in I}(V_i(p) \times \{i\})$.

The disjoint union for Φ-models with teams $\biguplus_{i\in I}(K_i, T_i)$ is defined by $\biguplus_{i\in I}(K_i, T_i) = (\biguplus_{i\in I} K_i, \biguplus_{i\in I} T_i)$, where $\biguplus_{i\in I} T_i = \bigcup_{i\in I}(T_i \times \{i\})$.

Let us now prove three lemmas that will be used explicitly in the proof of the completeness theorem. We recall that $\theta^k_T = \bigvee_{w\in T} \chi^k_w \wedge \bigwedge_{w\in T}(\top \subseteq \chi^k_w)$ is the form of the team characteristic formulas obtained in Lemma 3.22. The first result, Lemma 4.13, captures that the semantic entailment between two formulas in the normal form, $\bigvee_{(K,T)\in\mathcal{C}} \theta^k_T \models \bigvee_{(M,S)\in\mathcal{D}} \theta^k_S$, holds if and only if every team in $\mathcal{C}$ is k-bisimilar to the disjoint union over a subcollection from $\mathcal{D}$. This lemma is the last semantic property we need for the completeness proof.

Lemma 4.13. *Let $\mathcal{C}$ and $\mathcal{D}$ be finite sets of Φ-models with nonempty teams. Then $\bigvee_{(K,T)\in\mathcal{C}} \theta^k_{K,T} \models \bigvee_{(M,S)\in\mathcal{D}} \theta^k_{M,S}$ if and only if for all $(K', T') \in \mathcal{C}$, there is a subclass $\mathcal{D}_T \subseteq \mathcal{D}$ such that $K', T' \leftrightarrows_k \biguplus \mathcal{D}_T$.*

Proof. We first prove the left-to-right direction. Let $(K', T') \in \mathcal{C}$. Clearly $T' \models \theta^k_{T'}$. By the empty team property, $T' \models \bigvee_{(K,T)\in\mathcal{C}} \theta^k_T$, which by assumption implies that $T' \models \bigvee_{(M,S)\in\mathcal{D}} \theta^k_S$. Then for each $(M, S) \in \mathcal{D}$, there are subteams $T'_S \subseteq T'$ such that $\bigcup_{(M,S)\in\mathcal{D}} T'_S = T'$ and $T'_S \models \theta^k_S$. By Lemma 3.22, either $K', T'_S \leftrightarrows_k M, S$ or $T'_S = \emptyset$.

Let us define a subclass $\mathcal{D}_T \subseteq \mathcal{D}$ by

$$\mathcal{D}_T = \{(M, S) \in \mathcal{D} \mid K', T'_S \leftrightarrows_k M, S\}.$$

We note that if $T'_S = \emptyset$, then $T'_S \notin \mathcal{D}_T$ since otherwise $K', \emptyset \leftrightarrows_k M, S$, where $S \neq \emptyset$. Now $(K', T') = (K', \bigcup_{(M,S)\in\mathcal{D}} T'_S) = (K', \bigcup_{(M,S)\in\mathcal{D}_T} T'_S)$. Also,

$$K', \bigcup_{(M,S)\in\mathcal{D}_T} T'_S \leftrightarrows_k \biguplus_{(M,S)\in\mathcal{D}_T} (K', T'_S) \leftrightarrows_k \biguplus_{(M,S)\in\mathcal{D}_T} (M, S).$$

We conclude that $K', T' \leftrightarrows_k \biguplus D_T$.

For the right-to-left direction, let $(K'\,T') \in \mathcal{C}$ be such that $T' \models \bigvee_{(K,T)\in\mathcal{C}} \theta^k_T$. We want to show that $T' \models \bigvee_{(M,S)\in\mathcal{D}} \theta^k_S$. By assumption, there is a subclass $\mathcal{D}_T \subseteq \mathcal{D}$ such that $K', T' \leftrightarrows_k \biguplus \mathcal{D}_T$. By Lemma 3.15 (iii), there are subteams $T'_S \subseteq T'$, such that $\bigcup_{(M,S)\in\mathcal{D}_T} T'_S = T'$ and $K', T'_S \leftrightarrows_k M, S$. By Lemma 3.22, $T'_S \models \theta^k_S$. So $T' \models \bigvee_{(M,S)\in\mathcal{D}_T} \theta^k_S$. By the empty team property we conclude that $T' \models \bigvee_{(M,S)\in\mathcal{D}} \theta^k_S$. □

As previously mentioned, the next two lemmas will be used in the completeness theorem. Furthermore, they will also be used in Lemma 4.16. In particular, Lemma 4.14 is a derivability result that corresponds to the semantic result of Lemma 3.22: that team-characteristic formulas capture team k-bisimulation.

Lemma 4.14. *If $K, T \leftrightarrows_k M, S$, then $\theta^k_{K,T} \dashv\vdash \theta^k_{M,S}$.*

Proof. Suppose that $K, T \leftrightarrows_k M, S$. Then either both teams T and S are empty or both are nonempty. If $T = S = \emptyset$, then $\theta^k_T = \bot \wedge \top = \theta^k_S$. Suppose that T and S are nonempty. We have that $\theta^k_T \vdash \bigvee_{w\in T} \chi^k_w$ by $\wedge$E. By Lemma 4.10 and $\vee$I, we derive for each $w' \in T$: $\chi^k_{w'} \vdash \chi^k_v \vdash \bigvee_{u\in S} \chi^k_u$, for some $v \in S$ such that $K, w' \leftrightarrows_k M, v$. We then use $\vee$E to conclude $\bigvee_{w\in T} \chi^k_w \vdash \bigvee_{u\in S} \chi^k_u$.

We index the elements of S with an index set I. Let $u_i \in S$, where $i \in I$. By k-bisimulation, there is a $w_i \in T$ such that $K, w_i \leftrightarrows_k M, u_i$, which by Lemma 4.10 implies $\chi^k_{w_i} \vdash \chi^k_{u_i}$. By $\wedge$E and Proposition 4.3 (ii) we derive: $\theta^k_T \vdash \top \subseteq \chi^k_{w_i} \vdash \top \subseteq \chi^k_{u_i}$. Since u_i was arbitrary, this holds for all $u \in S$, and we conclude by $\wedge$I that $\theta^k_T \vdash \bigwedge_{u\in S}(\top \subseteq \chi^k_u)$.

Finally, we use conjuction introduction to conclude $\theta^k_T \vdash \bigvee_{u\in S} \chi^k_u \wedge \bigwedge_{u\in S}(\top \subseteq \chi_u)$. The other direction is symmetrical. □

The next lemma shows that the team-characteristic formula for the disjoint union of $\mathcal{D}$, entails the disjunction of team-characteristic formulas for the teams in $\mathcal{D}$, with the latter formula being in the normal form.

Lemma 4.15. $\theta^k_{\biguplus \mathcal{D}} \vdash \bigvee_{(M,S)\in\mathcal{D}} \theta^k_{M,S}$.

Proof. If $\mathcal{D}$ is empty, then $\theta^k_{\biguplus \mathcal{D}} = \bigvee \emptyset \wedge \bigwedge \emptyset \dashv\vdash \bot$ and we use Proposition 4.1 (vii) to derive $\bot \vdash \bigvee_{(M,S)\in\mathcal{D}} \theta^k_S$. Suppose that $\mathcal{D}$ is nonempty. Since $\mathcal{D}$ is finite, we can index the members by some finite index set I such that $(M_i, S_i) \in \mathcal{D}$ for all $i \in I$. Since a state and its disjoint copy are k-bisimilar, it follows by Lemma 4.10 that their corresponding Hintikka formulas are equivalent. By Proposition 4.1 (i), (ii) and Proposition 4.3 (ii), we have that

$$\theta^k_{\biguplus \mathcal{D}} = \bigvee_{(M,w)\in\biguplus \mathcal{D}} \chi^k_w \wedge \bigwedge_{(M,w)\in\biguplus \mathcal{D}} (\top \subseteq \chi^k_w) \dashv\vdash \bigvee_{(M_i,S_i)\in\mathcal{D}} \bigvee_{w\in S_i} \chi^k_w \wedge \bigwedge_{(M_i,S_i)\in\mathcal{D}} \bigwedge_{w\in S_i} (\top \subseteq \chi^k_w).$$

First we prove the following claim: For any $\mathcal{MIL}$-formula ψ and $\mathcal{ML}$-formulas α_i, with $i \in I$, we can derive:

$$\bigvee_{i\in I} \alpha_i \vee \psi, \bigwedge_{i\in I}(\top \subseteq \alpha_i) \vdash (\bigvee_{i\in I} \alpha_i \wedge \bigwedge_{i\in I}(\top \subseteq \alpha_i)) \vee \psi. \tag{4.1}$$

By $\subseteq$Distr we derive $\bigvee_{i\in I} \alpha_i \vee \psi, \bigwedge_{i\in I}(\top \subseteq \alpha_i) \vdash ((\bigvee_{i\in I} \alpha_i \vee \bigvee_{i\in I} \alpha_i) \wedge \bigwedge_{i\in I}(\top \subseteq \alpha_i)) \vee \psi$. We derive $(\bigvee_{i\in I} \alpha_i \vee \bigvee_{i\in I} \alpha_i) \wedge \bigwedge_{i\in I}(\top \subseteq \alpha_i) \vdash \bigvee_{i\in I} \alpha_i \wedge \bigwedge_{i\in I}(\top \subseteq \alpha_i)$ by $\wedge$E, $\vee$E and $\wedge$I, thus $((\bigvee_{i\in I} \alpha_i \vee \bigvee_{i\in I} \alpha_i) \wedge \bigwedge_{i\in I}(\top \subseteq \alpha_i)) \vee \psi \vdash (\bigvee_{i\in I} \alpha_i \wedge \bigwedge_{i\in I}(\top \subseteq \alpha_i)) \vee \psi$ follows by Proposition 4.1 (ii).

For the sake of readability, let $I = \{1, \ldots, n\}$ and define $\eta_i = \bigvee_{w\in S_i} \chi^k_w$ and $\zeta_i = \bigwedge_{w\in S_i}(\top \subseteq \chi^k_w)$. Now we derive

$$\begin{aligned} (\eta_1 \vee \eta_2 \vee \cdots \vee \eta_n), \zeta_1 &\vdash (\eta_1 \vee (\eta_2 \vee \cdots \vee \eta_n)) \wedge \zeta_1 && \text{(Prop. 4.1 (vi))} \\ &\vdash (\eta_1 \wedge \zeta_1) \vee (\eta_2 \vee \cdots \vee \eta_n). && \text{((4.1))} \end{aligned}$$

We continue with the same method

$$\begin{aligned} (\eta_1 \wedge \zeta_1) \vee (\eta_2 \vee \cdots \vee \eta_n), \zeta_2 &\vdash (\eta_2 \vee ((\eta_1 \vee \zeta_1) \vee \cdots \vee \eta_n)) \wedge \zeta_2 \\ &\vdash (\eta_2 \wedge \zeta_2) \vee (\eta_1 \wedge \zeta_1) \vee (\eta_3 \vee \cdots \vee \eta_n), \end{aligned}$$

until we have the derivation

$$\begin{aligned} &(\eta_1 \vee \eta_2 \vee \cdots \vee \eta_n), \zeta_1, \ldots, \zeta_n \vdash (\eta_n \wedge \zeta_n) \vee \cdots \vee (\eta_1 \wedge \zeta_1) \\ &\vdash (\bigvee_{w\in S_1} \chi^k_w \wedge \bigwedge_{w\in S_1} (\top \subseteq \chi^k_w)) \vee \cdots \vee (\bigvee_{w\in S_n} \chi^k_w \wedge \bigwedge_{w\in S_n} (\top \subseteq \chi^k_w)). \end{aligned}$$

□

A central lemma in proving the completeness theorem is the provable equivalence of the normal form. The proof is involved, thus we postpone the proof until the next subsection.

Lemma 4.16 (Provable equivalence of the normal form)**.** *Let Φ be a finite set of propositional symbols. For any formula ϕ in $\mathcal{MIL}(\Phi)$: $\phi \dashv\vdash \phi'$, where ϕ' is in the normal form as in (NF).*

Using Lemma 4.16 and Lemma 3.29, we can show the completeness theorem for our system: Anything that is sound, is derivable.

Theorem 4.17 (Completeness)**.** *Let Φ be a finite set of propositional symbols. If $\Gamma \cup \{\phi\}$ is a set of $\mathcal{MIL}(\Phi)$ formulas and $\Gamma \models \psi$, then $\Gamma \vdash \psi$.*

Proof. Suppose that $\Gamma \models \psi$. Since $\mathcal{MIL}$ is compact, there is a finite subset $\Gamma_0 \subseteq \Gamma$ such that $\Gamma_0 \models \psi$. Now the conjunction $\phi = \bigwedge_{\gamma \in \Gamma_0} \gamma$ is a formula in $\mathcal{MIL}$. It suffices to show that $\phi \vdash \psi$.

By Lemma 4.16, there are $\mathcal{MIL}$-formulas $\bigvee_{(K,T)\in\mathcal{C}} \theta^k_T$ and $\bigvee_{(M,S)\in\mathcal{D}} \theta^k_S$ such that

$$\phi \dashv\vdash \bigvee_{(K,T)\in\mathcal{C}} \theta^k_T \text{ and } \psi \dashv\vdash \bigvee_{(M,S)\in\mathcal{D}} \theta^k_S.$$

By the soundness theorem it follows that

$$\phi \equiv \bigvee_{(K,T)\in\mathcal{C}} \theta^k_T \text{ and } \psi \equiv \bigvee_{(M,S)\in\mathcal{D}} \theta^k_S.$$

Thus $\bigvee_{(K,T)\in\mathcal{C}} \theta^k_T \models \bigvee_{(M,S)\in\mathcal{D}} \theta^k_S$. If $\mathcal{C} = \emptyset$, then $\bigvee_{(K,T)\in\mathcal{C}} \theta^k_T$ is the empty disjunction and we use Proposition 4.1 (vii) to derive ψ. Suppose that $\mathcal{C} \neq \emptyset$ and let $(K,T) \in \mathcal{C}$. By Lemma 4.13 there is a subclass $\mathcal{D}_T \subseteq \mathcal{D}$ such that $K,T \leftrightarrows_k \biguplus \mathcal{D}_T$. By Lemma 4.14, Lemma 4.15 and $\vee$I

$$\theta^k_T \vdash \theta^k_{\biguplus \mathcal{D}_T} \vdash \bigvee_{(M,S)\in\mathcal{D}_T} \theta^k_S \vdash \bigvee_{(M,S)\in\mathcal{D}} \theta^k_S.$$

By $\vee$E we get that $\bigvee_{(K,T)\in\mathcal{C}} \theta^k_{K,T} \vdash \bigvee_{(M,S)\in\mathcal{D}} \theta^k_S$, and conclude that $\phi \vdash \psi$. $\square$

Together with the soundness theorem, the previous result implies that $\Gamma \models \psi$ if and only if $\Gamma \vdash \psi$. Thus the strongly complete axiomatization of $\mathcal{MIL}$ is realized.

4.2.2 Provable equivalence of the normal form

All results in this subsection are technical properties of $\mathcal{MIL}$ and applications of its proof system, which will be used to show main result of this subsection, the proof of Lemma 4.16: *provable equivalence of the normal form*, which proves that for every $\mathcal{MIL}$-formula ϕ, there is an $\mathcal{MIL}$-formula ϕ' in the normal form, such that $\phi \dashv\vdash \phi'$. The result is proved by induction on the complexity of $\mathcal{MIL}$-formulas.

First we show that if two pointed Φ-models are not k-bisimilar, then their respective Hintikka formulas prove a contradiction.

Lemma 4.18. *Let Φ be a set of propositional symbols and let (K, w) and (M, u) be pointed Φ-models. If $K, w \not\leftrightarrows_k M, u$, then $\chi^k_{K,w}, \chi^k_{M,u} \vdash \bot$.*

Proof. Suppose for a contradiction that $\chi^k_w, \chi^k_u \nvdash \bot$. Since χ^k_w and χ^k_u are $\mathcal{MIL}$-formulas, it follows from Lemma 4.9 that there is some Kripke model K' with a nonempty team T such that $K', T \models \chi^k_w$ and $K', T \models \chi^k_u$. By flatness $K', v \models \chi^k_w$ and $K', v \models \chi^k_u$ for all $v \in T$, from which it follows by Theorem 3.8 that $K, w \leftrightarrows_k K', v \leftrightarrows_k M, u$, which is a contradiction. We conclude $\chi^k_w, \chi^k_u \vdash \bot$. □

We build on the previous result to show the comparable result for Φ-models with teams: If two Φ-models with teams are not k-bisimilar, then their respective team-characteristic formulas prove a contradiction. This result will be used to prove the induction case for conjunction formulas in Lemma 4.16.

Lemma 4.19. *If $K, T \not\leftrightarrows_k M, S$, then $\theta^k_{K,T}, \theta^k_{M,S} \vdash \bot$.*

Proof. Without loss of generality we can assume that the state that does not have a k-bisimilar counterpart is in the team T, i.e., there is some $w \in T$ such that $K, w \not\leftrightarrows_k M, u$ for all $u \in S$. By Lemma 4.18 we have that $\chi^k_w, \chi^k_u \vdash \bot$, from which, together with disjunction elimination, it follows that $\bigvee_{u \in S} \chi^k_u, \chi^k_w \vdash \bot$. By $\neg$I we derive $\bigvee_{u \in S} \chi^k_u \vdash \neg\chi^k_w$. By $\wedge$E we now have that $\theta^k_S \vdash \bigvee_{u \in S} \chi^k_u \vdash \neg\chi^k_w$. We also derive $\theta^k_T \vdash \top \subseteq \chi^k_w$ with $\wedge$E. Finally, we use $\subseteq_\neg$E to derive $\top \subseteq \chi^k_w, \neg\chi^k_w \vdash \bot$. □

Next we show that the rule $\vee_\subseteq$E can be generalized to allow for a conjunction of inclusion atoms instead of just one. We can then generalize the application of the rule further, to allow multiple disjunctions. This result will be used to prove the induction cases for both conjunction and inclusion formulas in Lemma 4.16.

Lemma 4.20. *Let Γ consist of $\mathcal{MIL}$-formulas.*

(i) If the following three conditions are met

(a) $\Gamma, \psi \vdash \chi$

(b) $\Gamma, \phi, \mathsf{x}_1 \subseteq \mathsf{a}_1, \ldots, \mathsf{x}_k \subseteq \mathsf{a}_k \vdash \chi$

(c) $\Gamma, \phi \vee \psi, \mathsf{x}_1 \subseteq \mathsf{a}_1, \ldots, \mathsf{x}_k \subseteq \mathsf{a}_k \vdash \chi$,

then $\Gamma, (\phi \wedge \mathsf{x}_1 \subseteq \mathsf{a}_1 \wedge \cdots \wedge \mathsf{x}_k \subseteq \mathsf{a}_k) \vee \psi \vdash \chi$.

(ii) Let I be a nonempty finite index set. For each $i \in I$, let ι_i be a conjunction of finitely many primitive inclusion atoms. If for every nonempty index set $J \subseteq I$

$$\Gamma, \bigvee_{j \in J} \phi_j, \bigwedge_{j \in J} \iota_j \vdash \chi, \tag{4.2}$$

then $\Gamma, \bigvee_{i \in I}(\phi_i \wedge \iota_i) \vdash \chi$.

Proof. (i) To use the rule $\vee_{\subseteq}$E to conclude $\Gamma, (\phi \wedge \mathsf{x}_1 \subseteq \mathsf{a}_1 \wedge \cdots \wedge \mathsf{x}_k \subseteq \mathsf{a}_k) \vee \psi \vdash \chi$, we need to show

(1) $\Gamma, \psi \vdash \chi$
(2) $\Gamma, \phi \wedge \mathsf{x}_2 \subseteq \mathsf{a}_2 \wedge \cdots \wedge \mathsf{x}_k \subseteq \mathsf{a}_k, \mathsf{x}_1 \subseteq \mathsf{a}_1 \vdash \chi$
(3) $\Gamma, (\phi \wedge \mathsf{x}_2 \subseteq \mathsf{a}_2 \wedge \cdots \wedge \mathsf{x}_k \subseteq \mathsf{a}_k) \vee \psi, \mathsf{x}_1 \subseteq \mathsf{a}_1 \vdash \chi$,

where the first two conditions follow from the assumptions (a) and (b) respectively. The last condition holds by $\vee_{\subseteq}$E if

(1) $\Gamma, \psi \vdash \chi$
(2) $\Gamma, \phi \wedge \mathsf{x}_3 \subseteq \mathsf{a}_3 \wedge \cdots \wedge \mathsf{x}_k \subseteq \mathsf{a}_k, \mathsf{x}_1 \subseteq \mathsf{a}_1, \mathsf{x}_2 \subseteq \mathsf{a}_2 \vdash \chi$
(3) $\Gamma, (\phi \wedge \mathsf{x}_3 \subseteq \mathsf{a}_3 \wedge \cdots \wedge \mathsf{x}_k \subseteq \mathsf{a}_k) \vee \psi, \mathsf{x}_1 \subseteq \mathsf{a}_1, \mathsf{x}_2 \subseteq \mathsf{a}_2 \vdash \chi$,

where again the first two conditions follow from the assumptions (a) and (b). We continue reducing the problem using $\vee_{\subseteq}$E until the third condition is of the form

(3) $\Gamma, \phi \vee \psi, \mathsf{x}_1 \subseteq \mathsf{a}_1, \ldots, \mathsf{x}_k \subseteq \mathsf{a}_k \vdash \chi$,

which follows from assumption (c).

(ii) Suppose that (4.2) holds for all nonempty index sets $J \subseteq I$. First we prove the following claim: For all disjoint sets $K, L \subseteq I$, where $K \neq \emptyset$,

$$\Gamma, \bigvee_{k \in K} \phi_k \vee \bigvee_{l \in L}(\phi_l \wedge \iota_l), \bigwedge_{k \in K} \iota_k \vdash \chi.$$

We prove the claim by induction on L. If $L = \emptyset$ then $\bigvee_{k \in K} \phi_k \vee \bigvee_{l \in L}(\phi_l \wedge \iota_l) = \bigvee_{k \in K} \phi_k \vee \bot \vdash \bigvee_{k \in K} \phi_k$ by Proposition 4.1 (viii) and $\Gamma, \bigvee_{k \in K} \phi_k, \bigwedge_{k \in K} \iota_k \vdash \chi$ by

assumption (4.2). Suppose that the claim holds for L and consider $L \cup \{0\}$, with $0 \notin L$. We show that

$$\Gamma, \bigvee_{k\in K} \phi_k \vee \bigvee_{l\in L}(\phi_l \wedge \iota_l) \vee (\phi_0 \wedge \iota_0), \bigwedge_{k\in K} \iota_k \vdash \chi.$$

We notice that the formula on the left is in the right form to use (i), with $\bigwedge_{k\in K} \iota_k \in \Gamma$, $\phi := \phi_0$, $\psi := \bigvee_{k\in K} \phi_k \vee \bigvee_{l\in L}(\phi_l \wedge \iota_l)$ and ι_0 is a conjunction of a finite number of primitive inclusion atoms. We also have that

$$\begin{array}{lll}
(1) & \Gamma, \bigvee_{k\in K} \phi_k \vee \bigvee_{l\in L}(\phi_l \wedge \iota_l), \bigwedge_{k\in K} \iota_k \vdash \chi & (IH) \\
(2) & \Gamma, \phi_0, \iota_0, \bigwedge_{k\in K} \iota_k \vdash \chi & ((4.2)) \\
(3) & \Gamma, \phi_0 \vee \bigvee_{k\in K} \phi_k \vee \bigvee_{l\in L}(\phi_l \wedge \iota_l), \iota_0, \bigwedge_{k\in K} \iota_k & \\
 & \vdash \Gamma \wedge (\bigvee_{k\in K\cup\{0\}} \phi_k \vee \bigvee_{l\in L}(\phi_l \wedge \iota_l)) \wedge \bigwedge_{k\in K\cup\{0\}} \iota_k \vdash \chi, & (IH)
\end{array}$$

so the claim follows by (i).

Now we prove that $\Gamma, \bigvee_{i\in I}(\phi_i \wedge \iota_i) \vdash \chi$ by induction on the size of I. If $|I| = 1$, then the result is immediate by (4.2). Suppose that (ii) holds for I. Consider $I \cup \{0\}$, with $0 \notin I$. Our desired formula is in the right form to use (i), with $\phi := \phi_0$, $\psi := \bigvee_{i\in I}(\phi_i \wedge \iota_i)$ and ι_0 is a conjunction of a finite number of primitive inclusion atoms. We have the following

$$\begin{array}{lll}
(1) & \Gamma, \bigvee_{i\in I}(\phi_i \wedge \iota_i) \vdash \chi & (IH) \\
(2) & \Gamma, \phi_0, \iota_0 \vdash \chi & ((4.2), I = \{0\}) \\
(3) & \Gamma, \phi_0 \vee \bigvee_{i\in I}(\phi_i \wedge \iota_i), \iota_0 \vdash \chi & \text{(By claim)}
\end{array}$$

hence $\Gamma, \bigvee_{i\in I}(\phi_i \wedge \iota_i) \vee (\phi_0 \wedge \iota_0) \vdash \chi$ follows by (i).

□

We show a similar application for the rule $\Box\vee_{\subseteq}$E, that will be used to prove the induction case for box formulas in Lemma 4.16.

Lemma 4.21. *Let Γ consist of $\mathcal{MIL}$-formulas.*

(i) If the following three conditions are met

(a) $\Gamma, \Box\psi \vdash \chi$

(b) $\Gamma, \Box\phi, \top \subseteq \Diamond \mathsf{a}_1^{\mathsf{x}_1}, \ldots, \top \subseteq \Diamond \mathsf{a}_k^{\mathsf{x}_k} \vdash \chi$

(c) $\Gamma, \Box(\phi \vee \psi), \top \subseteq \Diamond \mathsf{a}_1^{\mathsf{x}_1}, \ldots, \top \subseteq \Diamond \mathsf{a}_k^{\mathsf{x}_k} \vdash \chi$,

then $\Gamma, \Box((\phi \wedge \mathsf{x}_1 \subseteq \mathsf{a}_1 \wedge \cdots \wedge \mathsf{x}_k \subseteq \mathsf{a}_k) \vee \psi) \vdash \chi$.

(ii) Let I be a finite index set. For each $i \in I$, let ι_i be a conjunction of finitely many primitive inclusion atoms. For $\iota_i = \bigwedge_{k \in K_i}(\mathsf{x}_k \subseteq \mathsf{a}_k)$, define $\iota_{\Diamond i} = \bigwedge_{k \in K_i}(\top \subseteq \Diamond \mathsf{a}_k^{\mathsf{x}_k})$. If for every index set $J \subseteq I$

$$\Gamma, \Box \bigvee_{j \in J} \phi_j, \bigwedge_{j \in J} \iota_{\Diamond j} \vdash \chi, \tag{4.3}$$

then $\Gamma, \Box \bigvee_{i \in I}(\phi_i \wedge \iota_i) \vdash \chi$.

Proof. (i) To use the rule $\Box\vee_{\subseteq}$E to conclude $\Gamma, \Box((\phi \wedge \mathsf{x}_1 \subseteq \mathsf{a}_1 \wedge \cdots \wedge \mathsf{x}_k \subseteq \mathsf{a}_k) \vee \psi) \vdash \chi$, it is sufficient to show

(1) $\Gamma, \Box\psi \vdash \chi$

(2) $\Gamma, \Box(\phi \wedge \mathsf{x}_2 \subseteq \mathsf{a}_2 \wedge \cdots \wedge \mathsf{x}_k \subseteq \mathsf{a}_k), \top \subseteq \Diamond \mathsf{a}_1^{\mathsf{x}_1} \vdash \chi$

(3) $\Gamma, \Box((\phi \wedge \mathsf{x}_2 \subseteq \mathsf{a}_2 \wedge \cdots \wedge \mathsf{x}_k \subseteq \mathsf{a}_k) \vee \psi), \top \subseteq \Diamond \mathsf{a}_1^{\mathsf{x}_1} \vdash \chi$,

where the first condition follows from the assumption (a). To show that the second condition holds, we derive

$$\begin{aligned}
(2)\quad & \Gamma, \Box(\phi \wedge \mathsf{x}_2 \subseteq \mathsf{a}_2 \wedge \cdots \wedge \mathsf{x}_k \subseteq \mathsf{a}_k), \top \subseteq \Diamond \mathsf{a}_1^{\mathsf{x}_1} \\
& \vdash \Gamma, \Box\phi, \Box(\mathsf{x}_2 \subseteq \mathsf{a}_2), \ldots, \Box(\mathsf{x}_k \subseteq \mathsf{a}_k), \top \subseteq \Diamond \mathsf{a}_1^{\mathsf{x}_1} && \text{(Prop. 4.2}(iv)) \\
& \vdash \Gamma, \Box\phi, \top \subseteq \Diamond \mathsf{a}_2^{\mathsf{x}_2}, \ldots, \top \subseteq \Diamond \mathsf{a}_k^{\mathsf{x}_k}, \top \subseteq \Diamond \mathsf{a}_1^{\mathsf{x}_1} && (\Box\Diamond_{\subseteq} Exc) \\
& \vdash \chi. && (b)
\end{aligned}$$

The third condition is derivable from the rule $\Box\vee_{\subseteq}$E if

(1) $\Gamma, \Box\psi, \top \subseteq \Diamond \mathsf{a}_1^{\mathsf{x}_1} \vdash \chi$

(2) $\Gamma, \Box(\phi \wedge \mathsf{x}_3 \subseteq \mathsf{a}_3 \wedge \cdots \wedge \mathsf{x}_k \subseteq \mathsf{a}_k), \top \subseteq \Diamond \mathsf{a}_1^{\mathsf{x}_1}, \top \subseteq \Diamond \mathsf{a}_2^{\mathsf{x}_2} \vdash \chi$

(3) $\Gamma, \Box((\phi \wedge \mathsf{x}_3 \subseteq \mathsf{a}_3 \wedge \cdots \wedge \mathsf{x}_k \subseteq \mathsf{a}_k) \vee \psi), \top \subseteq \Diamond \mathsf{a}_1^{\mathsf{x}_1}, \top \subseteq \Diamond \mathsf{a}_2^{\mathsf{x}_2} \vdash \chi$,

where again the first condition follows from the assumption (a) and the second condition follows by the same argument as the previous second condition. We continue in the same manner until the third condition is reduced to

(3) $\Gamma, \Box(\phi \vee \psi), \top \subseteq \Diamond \mathsf{a}_1^{\mathsf{x}_1}, ..., \top \subseteq \Diamond \mathsf{a}_k^{\mathsf{x}_k} \vdash \chi$,

which is satisfied due to assumption (c).

(ii) Suppose that (4.3) holds for all index sets $J \subseteq I$. First we prove the following claim: For all disjoint sets $K, L \subseteq I$,

$$\Gamma, \Box(\bigvee_{k\in K} \phi_k \vee \bigvee_{l\in L}(\phi_l \wedge \iota_l)), \bigwedge_{k\in K} \iota_{\Diamond k} \vdash \chi.$$

We prove the claim by induction on L. If $L = \emptyset$ then $\Box(\bigvee_{k\in K} \phi_k \vee \bigvee_{l\in L}(\phi_l \wedge \iota_l)) = \Box(\bigvee_{k\in K} \phi_k \vee \bot) \vdash \Box \bigvee_{k\in K} \phi_k$ by Proposition 4.1 (viii) and $\Box$Mon. And $\Gamma, \Box \bigvee_{k\in K} \phi_k, \bigwedge_{k\in K} \iota_{\Diamond k} \vdash \chi$ by assumption (4.3). Suppose that the claim holds for L and consider $L \cup \{0\}$, with $0 \notin L$. We show that

$$\Gamma, \Box(\bigvee_{k\in K} \phi_k \vee \bigvee_{l\in L}(\phi_l \wedge \iota_l) \vee (\phi_0 \wedge \iota_0)), \bigwedge_{k\in K} \iota_{\Diamond k} \vdash \chi.$$

We notice that the formula $\Box(\bigvee_{k\in K} \phi_k \vee \bigvee_{l\in L}(\phi_l \wedge \iota_l) \vee (\phi_0 \wedge \iota_0))$ is in the right form to use (i), with $\bigwedge_{k\in K} \iota_{\Diamond k} \in \Gamma$, $\phi := \phi_0$, $\psi := \bigvee_{k\in K} \phi_k \vee \bigvee_{l\in L}(\phi_l \wedge \iota_l)$ and ι_0 is a conjunction of a finite number of primitive inclusion atoms. We also have that

$$\begin{aligned}
&(1) \quad \Gamma, \Box(\bigvee_{k\in K} \phi_k \vee \bigvee_{l\in L}(\phi_l \wedge \iota_l)), \bigwedge_{k\in K} \iota_{\Diamond k} \vdash \chi && (IH)\\
&(2) \quad \Gamma, \Box\phi_0, \iota_{\Diamond 0}, \bigwedge_{k\in K} \iota_{\Diamond k} \vdash \chi && (4.3)\\
&(3) \quad \Gamma, \Box(\phi_0 \vee \bigvee_{k\in K} \phi_k \vee \bigvee_{l\in L}(\phi_l \wedge \iota_l)), \iota_{\Diamond 0}, \bigwedge_{k\in K} \iota_{\Diamond k}\\
&\quad \vdash \Gamma, \Box((\bigvee_{k\in K\cup\{0\}} \phi_k \vee \bigvee_{l\in L}(\phi_l \wedge \iota_l))), \bigwedge_{k\in K\cup\{0\}} \iota_{\Diamond k} \vdash \chi, && (IH)
\end{aligned}$$

so the claim follows by (i).

Now we prove that $\Gamma, \Box \bigvee_{i\in I}(\phi_i \wedge \iota_i) \vdash \chi$ by induction on the size of I. If $|I| = 0$, then $\Box \bigvee_{i\in I}(\phi_i \wedge \iota_i) = \Box \bigvee \emptyset$, and $\Gamma, \Box \bigvee \emptyset \vdash \chi$ by (4.3). Suppose that (ii) holds for I and consider $I \cup \{0\}$, with $0 \notin I$. Our desired formula is in the right form to use (i), where $\phi := \phi_0$, $\psi := \bigvee_{i\in I}(\phi_i \wedge \iota_i)$ and ι_0 is a conjunction of a finite number of primitive inclusion atoms. The following criteria are met

$$\begin{aligned}
&(1) \quad \Gamma, \Box \bigvee_{i\in I}(\phi_i \wedge \iota_i) \vdash \chi && (IH)\\
&(2) \quad \Gamma, \Box\phi_0, \iota_{\Diamond 0} \vdash \chi && (4.3)\\
&(3) \quad \Gamma, \Box(\phi_0 \vee \bigvee_{i\in I}(\phi_i \wedge \iota_i)), \iota_{\Diamond 0} \vdash \chi, && \text{(By claim)}
\end{aligned}$$

so $\Gamma, \Box(\bigvee_{i\in I}(\phi_i \wedge \iota_i) \vee (\phi_0 \wedge \iota_0)) \vdash \chi$ follows by (i).

$\Box$

We return to Lemma 4.16: provable equivalence of the normal form. We will use the normal form for $\mathcal{ML}$-formulas as presented in [12]: For all $\alpha \in \mathcal{ML}$, we have that $\alpha \equiv \bigvee_{(K,w)\in\mathcal{D}} \chi^k_w$ (over states), with $k = \mathrm{md}(\alpha)$ and $\mathcal{D} = \{(K,w) \mid K,w \models \alpha\}$. All the cases except for the new cases of box and diamond are essentially due to or inspired by [30].

Proof of Lemma 4.16. Let $\phi \in \mathcal{MIL}(\Phi)$. We prove the theorem by induction on ϕ.

- We show the cases for $\mathcal{ML}$-formulas. If $\phi = \bot$, define $\phi' = \bot$. Then $\phi \dashv\vdash \phi'$ is trivial. We combine the cases for $\phi = p \in \Phi$ and $\phi = \neg\beta$, where $\beta \in \mathcal{ML}(\Phi)$, then in either case ϕ is a classical formula α. By the $\mathcal{ML}$ normal form we have that $\alpha \equiv \bigvee_{(K,w)\in\mathcal{D}} \chi^k_w$ (over states), with $k = \mathrm{md}(\alpha)$ and $\mathcal{D} = \{(K,w) \mid K,w \models \alpha\}$. It then follows from Lemma 4.9 that

$$\alpha \dashv\vdash \bigvee_{(K,w)\in\mathcal{D}} \chi^k_w.$$

  We show that $\bigvee_{(K,w)\in\mathcal{D}} \chi^k_w \dashv\vdash \bigvee_{(K,w)\in\mathcal{D}} \theta^k_{\{w\}}$.

  ($\vdash$) By $\vee$E, it suffices to show for all $(K,w) \in \mathcal{D}$ that $\chi^k_w \vdash \bigvee_{(K,w)\in\mathcal{D}}(\chi^k_w \wedge \top \subseteq \chi^k_w) = \bigvee_{(K,w)\in\mathcal{D}} \theta^k_{\{w\}}$. Let $(K,w) \in \mathcal{D}$, then $\chi^k_w \vdash \chi^k_w \wedge \top \subseteq \chi^k_w \vdash \bigvee_{(K,w)\in\mathcal{D}}(\chi^k_w \wedge \top \subseteq \chi^k_w)$ by Proposition 4.3 (i) and $\vee$I.

  ($\dashv$) We show that for all $(K,w) \in \mathcal{D}$: $\theta^k_{\{w\}} = \chi^k_w \wedge \top \subseteq \chi^k_w \vdash \bigvee_{(K,w)\in\mathcal{D}} \chi^k_w$, then the result follows by $\vee$E. Let $(K,w) \in \mathcal{D}$, then $\chi^k_w \wedge \top \subseteq \chi^k_w \vdash \chi^k_w \vdash \bigvee_{(K,w)\in\mathcal{D}} \chi^k_w$ follows by $\wedge$E and $\vee$I.

(IH) There are classes $\mathcal{C}, \mathcal{D} \subseteq \mathcal{CT}(\Phi)$ such that

$$\psi_1 \dashv\vdash \bigvee_{(K,T)\in\mathcal{C}} \theta^k_T \quad \text{and} \quad \psi_2 \dashv\vdash \bigvee_{(M,S)\in\mathcal{D}} \theta^k_S.$$

- Let $\phi = \psi_1 \vee \psi_2$. By the induction hypothesis $\psi_1 \dashv\vdash \bigvee_{(K,T)\in\mathcal{C}} \theta^k_T$ and $\psi_2 \dashv\vdash \bigvee_{(M,S)\in\mathcal{D}} \theta^k_S$. Define $\phi' = \bigvee_{(K,T)\in\mathcal{C}} \theta^k_T \vee \bigvee_{(M,S)\in\mathcal{D}} \theta^k_S$. By the induction hypothesis and Proposition 4.1 (ii), $\psi_1 \vee \psi_2 \dashv\vdash \bigvee_{(K,T)\in\mathcal{C}} \theta^k_T \vee \bigvee_{(M,S)\in\mathcal{D}} \theta^k_S$ follows.

- Let $\phi = \psi_1 \wedge \psi_2$. If, let us say, $\mathcal{C}$ is empty then $\psi_1 \dashv\vdash \bigvee_{(K,T)\in\mathcal{C}} \theta^k_T = \bot$. We can define $\phi' = \bot$. Now $\phi \dashv\vdash \phi'$ is trivial.

  Suppose that $\mathcal{C}$ and $\mathcal{D}$ are nonempty. Define a set $\mathcal{Y}$ of Φ-models with teams by

$$\mathcal{Y} = \{\biguplus \mathcal{C}' \mid \mathcal{C}' \subseteq \mathcal{C} \text{ and } \biguplus \mathcal{C}' \leftrightarrows_k \biguplus \mathcal{D}', \text{ for some } \mathcal{D}' \subseteq \mathcal{D}\}.$$

  Let $\phi' = \bigvee_{X\in\mathcal{Y}} \theta^k_X$. We aim to show that $\psi_1 \wedge \psi_2 \dashv\vdash \bigvee_{X\in\mathcal{Y}} \theta^k_X$.

($\vdash$) To show that

$$\bigvee_{(K,T)\in\mathcal{C}} \theta^k_T, \bigvee_{(M,S)\in\mathcal{D}} \theta^k_S \vdash \bigvee_{X\in\mathcal{Y}} \theta^k_X$$

it suffices by Lemma 4.20 (ii) to show that

$$\bigvee_{(K,T)\in\mathcal{C}'} \bigvee_{w\in T} \chi^k_w, \bigwedge_{(K,T)\in\mathcal{C}'} \bigwedge_{w\in T} (\top \subseteq \chi^k_w), \bigvee_{(M,S)\in\mathcal{D}} \theta^k_S \vdash \bigvee_{X\in\mathcal{Y}} \theta^k_X,$$

for all nonempty $\mathcal{C}' \subseteq \mathcal{C}$. By the same lemma it suffices to show that we can derive $\bigvee_{X\in\mathcal{Y}} \theta^k_X$ from

$$\bigvee_{(K,T)\in\mathcal{C}'} \bigvee_{w\in T} \chi^k_w, \bigwedge_{(K,T)\in\mathcal{C}'} \bigwedge_{w\in T} (\top \subseteq \chi^k_w), \bigvee_{(M,S)\in\mathcal{D}'} \bigvee_{w\in S} \chi^k_w, \bigwedge_{(M,S)\in\mathcal{D}'} \bigwedge_{w\in S} (\top \subseteq \chi^k_w),$$

for all nonempty $\mathcal{D}' \subseteq \mathcal{D}$. And that reduces to showing $\theta_{\biguplus\mathcal{C}}, \theta_{\biguplus\mathcal{D}} \vdash \bigvee_{X\in\mathcal{Y}} \theta^k_X$ for all nonempty $\mathcal{C}' \subseteq \mathcal{C}$ and $\mathcal{D}' \subseteq \mathcal{D}$. Let $\mathcal{C}' \subseteq \mathcal{C}$ and $\mathcal{D}' \subseteq \mathcal{D}$ be nonempty.

If $\biguplus\mathcal{C}' \not\Leftrightarrow_k \biguplus\mathcal{D}'$, then $\theta_{\biguplus\mathcal{C}'}, \theta_{\biguplus\mathcal{D}'} \vdash \bot \vdash \bigvee_{X\in\mathcal{Y}} \theta^k_X$ by Lemma 4.19 and Proposition 4.1 (vii).

If $\biguplus\mathcal{C}' \Leftrightarrow_k \biguplus\mathcal{D}'$, then $\biguplus\mathcal{C}' \in \mathcal{Y}$, hence $\theta_{\biguplus\mathcal{C}'} \vdash \bigvee_{X\in\mathcal{Y}} \theta^k_X$ by disjunction introduction.

($\dashv$) We show that $\bigvee_{X\in\mathcal{Y}} \theta^k_X \vdash \psi_1 \wedge \psi_2$. To use $\vee$E, it is sufficient to show that for every $X \in \mathcal{Y}$

$$\theta^k_X \vdash \bigvee_{(K,T)\in\mathcal{C}'} \theta^k_T \vdash \bigvee_{(K,T)\in\mathcal{C}} \theta^k_T \vdash \psi_1 \quad \text{and} \quad \theta^k_X \vdash \bigvee_{(M,S)\in\mathcal{D}'} \theta^k_S \vdash \bigvee_{(M,S)\in\mathcal{D}} \theta^k_S \vdash \psi_2.$$

Note that X is of the form $\biguplus\mathcal{C}'$ for some $\mathcal{C}' \subseteq \mathcal{C}$, hence Lemma 4.15 and Lemma 4.14 justify step one. The second step is by $\vee$I, and the last step follows from the induction hypothesis. Therefore $\theta^k_X \vdash \psi_1 \wedge \psi_2$ by conjunction introduction. The result then follows by disjunction elimination.

- Let $\phi = \mathsf{a} \subseteq \mathsf{b}$, where $\mathsf{a} = \alpha_1 \dots \alpha_n$ and $\mathsf{b} = \beta_1 \dots \beta_n$. By the rules $\subseteq$Rdt and $\subseteq$Ext we derive

$$\mathsf{a} \subseteq \mathsf{b} \dashv\vdash \bigwedge_{\mathsf{x}\in\{\top,\bot\}^{|\mathsf{a}|}} (\neg\mathsf{a}^{\mathsf{x}} \vee \mathsf{x} \subseteq \mathsf{b}).$$

Assuming the induction cases for $\mathcal{ML}$-formulas, conjunction and disjunction cases, it suffices to show that each primitive inclusion atom is provably equivalent to a formula in the normal form. We claim that $\mathsf{x} \subseteq \mathsf{b} \dashv\vdash \bigvee_{(K,T)\in\mathcal{Y}} \theta^k_T$, where the class $\mathcal{Y}$ is defined by

$$\mathcal{Y} = \{(K,T) \mid \exists w \in T \text{ such that } w \models \mathsf{b}^{\mathsf{x}}\},$$

and $k = \mathrm{md}(\mathsf{x} \subseteq \mathsf{b}) = \mathrm{md}(\mathsf{b}^{\mathsf{x}})$.

We recall that for a finite set Φ of propositional symbols, there are only a finite number of non-equivalent k:th team-characteristic formulas. Hence, we can assume that the disjunction $\bigvee_{(K,T)\in\mathcal{Y}} \theta_T^k$ is finite.

First we prove the following claim: If $w \models \alpha$, then $\chi_w^k \vdash \alpha$, where $k \geq \mathrm{md}(\alpha)$. To prove the claim, it is enough to show that $\chi_w^k \models \alpha$, then the derivation $\chi_w^k \vdash \alpha$ follows by Proposition 4.8. Let $X \models \chi_w^k$, then $u \models \chi_w^k$ for all $u \in X$ by flatness. By Theorem 3.8 it follows that $w \equiv_k u$, so $u \models \alpha$. Using flatness again, we conclude $X \models \alpha$.

($\vdash$) Let $\mathcal{M}$ be the collection of all Φ-models, then $\vdash \bigvee_{(K,v)\in\mathcal{M}} \chi_v^k$ follows from $\models \bigvee_{(K,v)\in\mathcal{M}} \chi_v^k$ and Lemma 4.9.

Also, $\chi_u^k \vdash \chi_u^k \wedge \top \subseteq \chi_u^k \vdash \bigvee_{(K,v)\in\mathcal{M}}(\chi_v^k \wedge \top \subseteq \chi_v^k)$ by Proposition 4.3 (i) and $\vee$I.

To show $\bigvee_{(K,v)\in\mathcal{M}}(\chi_v^k \wedge \top \subseteq \chi_v^k), \mathsf{x} \subseteq \mathsf{b} \vdash \bigvee_{T\in\mathcal{Y}} \theta_T^k$, by Lemma 4.20 (ii) it suffices to show that for all nonempty teams T,

$$\bigvee_{v\in T} \chi_v^k, \bigwedge_{v\in T}(\top \subseteq \chi_v^k), \mathsf{x} \subseteq \mathsf{b} \vdash \bigvee_{(K,T)\in\mathcal{Y}} \theta_T^k.$$

If $(K,T) \in \mathcal{Y}$ the derivation follows from $\vee$I. If $(K,T) \notin \mathcal{Y}$, then for any $v \in T$, $v \models \neg\mathsf{b}^{\mathsf{x}}$. The formula $\neg\mathsf{b}^{\mathsf{x}}$ is a classical formula with modal depth at most k, hence $\chi_v^k \vdash \neg\mathsf{b}^{\mathsf{x}}$ by the claim. So $\bigvee_{v\in T} \chi_v^k \vdash \neg\mathsf{b}^{\mathsf{x}}$ by $\vee$E. Using the rule $\subseteq_\neg$E we derive $\neg\mathsf{b}^{\mathsf{x}}, \mathsf{x} \subseteq \mathsf{b} \vdash \bigvee_{(K,T)\in\mathcal{Y}} \theta_T^k$.

($\dashv$) For all $(K,T) \in \mathcal{Y}$ we have that $\theta_T^k \vdash \top \subseteq \chi_w^k \vdash \top \subseteq \mathsf{b}^{\mathsf{x}} \vdash \mathsf{x} \subseteq \mathsf{b}$. The first step is by $\wedge$E. Since $(K,T) \in \mathcal{Y}$, we have that there is a $w \in T$ such that $w \models \mathsf{b}^{\mathsf{x}}$, from which the second step follows by the claim and Proposition 4.3 (ii). The last step is due to the following derivation.

$$\begin{aligned}
\top \subseteq \mathsf{b}^{\mathsf{x}} &\vdash \top^{|\mathsf{b}|} \subseteq \mathsf{b}^{\mathsf{x}} \dots \mathsf{b}^{\mathsf{x}} && (\subseteq Wk)\\
&\vdash \top^{|\mathsf{b}|} \subseteq \beta_1^{x_1} \dots \beta_n^{x_n} && (\text{Prop. } 4.3(ii))\\
&\vdash x_1 \dots x_n \subseteq \beta_1 \dots \beta_n. && (\subseteq_{\bot\top} Exc)
\end{aligned}$$

We conclude $\bigvee_{(K,T)\in\mathcal{Y}} \theta_T^k \vdash \mathsf{x} \subseteq \mathsf{b}$ by $\vee$E.

- Let $\phi = \Diamond\psi$. By the induction hypothesis and $\Diamond$Mon, $\Diamond\psi \dashv\vdash \Diamond \bigvee_{(M,S)\in\mathcal{D}} \theta_S^k$. We show that

$$\Diamond\psi \dashv\vdash \bigvee_{(M,S)\in\mathcal{D}} (\Diamond \bigvee_{w\in S} \chi_w^k \wedge \bigwedge_{w\in S}(\top \subseteq \Diamond\chi_w^k)).$$

The result then follows by the induction cases for $\mathcal{ML}$-formulas, conjunction and disjunction.

($\vdash$) We have $\Diamond\psi \vdash \Diamond \bigvee_{(M,S)\in\mathcal{D}} \theta^k_S \vdash \bigvee_{(M,S)\in\mathcal{D}} \Diamond\theta^k_S$ by $\Diamond$Mon together with the induction hypothesis, and $\Diamond\vee$Distr. For each $S' \in \mathcal{D}$ we have that

$$\begin{aligned}
\Diamond\theta^k_{S'} &= \Diamond(\bigvee_{w\in S'} \chi^k_w \wedge \bigwedge_{w\in S'} (\top \subseteq \chi^k_w)) \\
&\vdash \Diamond \bigvee_{w\in S'} \chi^k_w \wedge \bigwedge_{w\in S'} (\top \subseteq \Diamond\chi^k_w) && \text{(Prop. 4.4)} \\
&\vdash \bigvee_{(M,S)\in\mathcal{D}} (\Diamond \bigvee_{w\in S} \chi^k_w \wedge \bigwedge_{w\in S} (\top \subseteq \Diamond\chi^k_w)). && (\vee I)
\end{aligned}$$

Hence by $\vee$E, we conclude $\Diamond\psi \vdash \bigvee_{(M,S)\in\mathcal{D}}(\Diamond \bigvee_{w\in S} \chi^k_w \wedge \bigwedge_{w\in S}(\top \subseteq \Diamond\chi^k_w))$.

($\dashv$) For each $S' \in \mathcal{D}$ we have that

$$\begin{aligned}
\Diamond \bigvee_{w\in S'} \chi^k_w \wedge \bigwedge_{w\in S'} (\top \subseteq \Diamond\chi^k_w) &\vdash \Diamond(\bigvee_{w\in S'} \chi^k_w \wedge \bigwedge_{w\in S'} (\top \subseteq \chi^k_w)) && \text{(Prop. 4.4)} \\
&\vdash \bigvee_{(M,S)\in\mathcal{D}} \Diamond(\bigvee_{w\in S} \chi^k_w \wedge \bigwedge_{w\in S} (\top \subseteq \chi^k_w)) && (\vee I) \\
&= \bigvee_{(M,S)\in\mathcal{D}} \Diamond\theta^k_S \\
&\vdash \Diamond \bigvee_{(M,S)\in\mathcal{D}} \theta^k_S && \text{(Prop. 4.2}(ii)) \\
&\vdash \Diamond\psi && (\Diamond Mon, IH)
\end{aligned}$$

By $\vee$E we conclude $\bigvee_{(M,S)\in\mathcal{D}}(\Diamond \bigvee_{w\in S} \chi^k_w \wedge \bigwedge_{w\in S}(\top \subseteq \Diamond\chi^k_w)) \vdash \Diamond\psi$.

- Let $\phi = \Box\psi$. By the induction hypothesis and $\Box$Mon, we have that $\Box\psi \dashv\vdash \Box \bigvee_{(M,S)\in\mathcal{D}} \theta^k_S$. We show that

$$\Box \bigvee_{(M,S)\in\mathcal{D}} \theta^k_S \dashv\vdash \bigvee_{\mathcal{D}\subseteq\mathcal{C}} (\Box \bigvee_{(K,w)\in\biguplus\mathcal{D}} \chi^k_w \wedge \bigwedge_{(K,w)\in\biguplus\mathcal{D}} (\top \subseteq \Diamond\chi^k_w)).$$

The result then follows by the induction cases for inclusion atoms, $\mathcal{ML}$-formulas, conjunction and disjunction.

($\vdash$) To make the derivation

$$\Box \bigvee_{(K,T)\in\mathcal{C}} (\bigvee_{w\in T} \chi^k_w \wedge \bigwedge_{w\in T} (\top \subseteq \chi^k_w)) \vdash \bigvee_{\mathcal{D}\subseteq\mathcal{C}} (\Box \bigvee_{(K,w)\in\biguplus\mathcal{D}} \chi^k_w \wedge \bigwedge_{(K,w)\in\biguplus\mathcal{D}} (\top \subseteq \Diamond\chi^k_w)),$$

it suffices by Lemma 4.21 (ii) to show that for all $\mathcal{D}' \subseteq \mathcal{C}$,

$$\Box \bigvee_{(K,T)\in\mathcal{D}'} \bigvee_{w\in T} \chi^k_w, \bigwedge_{(K,T)\in\mathcal{D}'} \bigwedge_{w\in T} (\top \subseteq \Diamond\chi^k_w) \vdash \bigvee_{\mathcal{D}\subseteq\mathcal{C}} (\Box \bigvee_{(K,w)\in\biguplus\mathcal{D}} \chi^k_w \wedge \bigwedge_{(K,w)\in\biguplus\mathcal{D}} (\top \subseteq \Diamond\chi^k_w)),$$

but this reduces to showing

$$\Box \bigvee_{(K,w)\in\biguplus\mathcal{D}'} \chi^k_w, \bigwedge_{(K,w)\in\biguplus\mathcal{D}'} (\top \subseteq \Diamond\chi^k_w) \vdash \bigvee_{\mathcal{D}\subseteq\mathcal{C}} (\Box \bigvee_{(K,w)\in\biguplus\mathcal{D}} \chi^k_w \wedge \bigwedge_{(K,w)\in\biguplus\mathcal{D}} (\top \subseteq \Diamond\chi^k_w)),$$

which holds by $\vee$I.

($\dashv$) We show that for any $\mathcal{D} \subseteq \mathcal{C}$,

$$\Box \bigvee_{(K,w)\in\biguplus\mathcal{D}} \chi^k_w, \bigwedge_{(K,w)\in\biguplus\mathcal{D}} (\top \subseteq \Diamond\chi^k_w) \vdash \Box \bigvee_{(K,T)\in\mathcal{C}} \theta^k_T.$$

Then the desired result follows by $\vee$E. First we derive

$$\begin{aligned} \bigwedge_{(K,w)\in\biguplus\mathcal{D}} (\top \subseteq \Diamond\chi^k_w) &\vdash \bigwedge_{(K,w)\in\biguplus\mathcal{D}} \Box(\top \subseteq \chi^k_w) && (\Diamond\Box_{\subseteq}Exc) \\ &\vdash \Box \bigwedge_{(K,w)\in\biguplus\mathcal{D}} (\top \subseteq \chi^k_w). && (\text{Prop. } 4.2(iv)) \end{aligned}$$

Now we derive

$$\begin{aligned} \Box \bigvee_{(K,w)\in\biguplus\mathcal{D}} \chi^k_w, \Box \bigwedge_{(K,w)\in\biguplus\mathcal{D}} (\top \subseteq \chi^k_w) & \\ &\vdash \Box(\bigvee_{(K,w)\in\biguplus\mathcal{D}} \chi^k_w \wedge \bigwedge_{(K,w)\in\biguplus\mathcal{D}} (\top \subseteq \chi^k_w)) && (\text{Prop. } 4.2(iv)) \\ &= \Box\theta^k_{\biguplus\mathcal{D}} \\ &\vdash \Box \bigvee_{(K,T)\in\mathcal{C}} \theta^k_T. && (\Box Mon) \end{aligned}$$

To use $\Box$Mon in the last step we derive $\theta^k_{\biguplus\mathcal{D}} \vdash \bigvee_{(K,T)\in\mathcal{D}} \theta^k_T \vdash \bigvee_{(K,T)\in\mathcal{C}} \theta^k_T$ by Lemma 4.15 and $\vee$I.

$\Box$

As a consequence of the proof of the induction case for inclusion atoms in the previous lemma, equivalent inclusion atoms are easily shown to be provably equivalent.

Proposition 4.22. *The following clauses regarding inclusion atoms are derivable.*

(i) $x_1 \dots x_n \subseteq \alpha_1 \dots \alpha_n \dashv\vdash \top \dots \top \subseteq \alpha_1^{x_1} \dots \alpha_n^{x_n}$.

(ii) $\mathsf{a}_0\mathsf{a}_1\mathsf{a}_2 \subseteq \mathsf{b}_0\mathsf{b}_1\mathsf{b}_2 \dashv\vdash \mathsf{a}_1\mathsf{a}_0\mathsf{a}_2 \subseteq \mathsf{b}_1\mathsf{b}_0\mathsf{b}_2$.

(iii) $\alpha_1 \dots \alpha_n \subseteq \beta_1 \dots \beta_n \vdash \alpha_{i_1} \dots \alpha_{i_m} \subseteq \beta_{i_1} \dots \beta_{i_m}$, *where* $i_1, \dots, i_m$ *are distinct indices from* $\{1, \dots, n\}$, *i.e., the rule* $\subseteq$*Proj is derivable.*

Proof. (i) By the normal form for primitive inclusion atoms in the proof of Lemma 4.16, we have that

$$x_1 \dots x_n \subseteq \alpha_1 \dots \alpha_n \dashv\vdash \bigvee_{(K,T)\in\mathcal{Y}} \theta_T^k \dashv\vdash \top \dots \top \subseteq \alpha_1^{x_1} \dots \alpha_n^{x_n},$$

where the class $\mathcal{Y}$ is defined by

$$\begin{aligned}\mathcal{Y} &= \{(K,T) \mid \exists w \in T \text{ such that } w \models \alpha_1^{x_1} \wedge \dots \wedge \alpha_n^{x_n}\} \\ &= \{(K,T) \mid \exists w \in T \text{ such that } w \models (\alpha_1^{x_1})^\top \wedge \dots \wedge (\alpha_n^{x_n})^\top\},\end{aligned}$$

and $k = \mathrm{md}(x_1 \dots x_n \subseteq \alpha_1 \dots \alpha_n) = \mathrm{md}(\top \dots \top \subseteq \alpha_1^{x_1} \dots \alpha_n^{x_n})$.

(ii) Using $\subseteq$Rdt and $\subseteq$Ext we derive

$$\begin{aligned}\mathsf{a}_0\mathsf{a}_1\mathsf{a}_2 \subseteq \mathsf{b}_0\mathsf{b}_1\mathsf{b}_2 &\dashv\vdash \bigwedge_{\mathsf{x}\in\{\top,\bot\}^{|\mathsf{a}_0\mathsf{a}_1\mathsf{a}_2|}} (\neg(\mathsf{a}_0\mathsf{a}_1\mathsf{a}_2)^{\mathsf{x}} \vee \mathsf{x} \subseteq \mathsf{b}_0\mathsf{b}_1\mathsf{b}_2) \\ &\dashv\vdash \bigwedge_{\mathsf{x}\in\{\top,\bot\}^{|\mathsf{a}_0\mathsf{a}_1\mathsf{a}_2|}} (\neg(\mathsf{a}_0\mathsf{a}_1\mathsf{a}_2)^{\mathsf{x}} \vee \bigvee_{(K,T)\in\mathcal{Y}} \theta_T^k) \\ &\dashv\vdash \bigwedge_{\mathsf{x}\in\{\top,\bot\}^{|\mathsf{a}_1\mathsf{a}_0\mathsf{a}_2|}} (\neg(\mathsf{a}_1\mathsf{a}_0\mathsf{a}_2)^{\mathsf{x}} \vee \bigvee_{(K,T)\in\mathcal{Y}} \theta_T^k) \\ &\dashv\vdash \bigwedge_{\mathsf{x}\in\{\top,\bot\}^{|\mathsf{a}_1\mathsf{a}_0\mathsf{a}_2|}} (\neg(\mathsf{a}_1\mathsf{a}_0\mathsf{a}_2)^{\mathsf{x}} \vee \mathsf{x} \subseteq \mathsf{b}_1\mathsf{b}_0\mathsf{b}_2) \\ &\dashv\vdash \mathsf{a}_1\mathsf{a}_0\mathsf{a}_2 \subseteq \mathsf{b}_1\mathsf{b}_0\mathsf{b}_2,\end{aligned}$$

where $\mathcal{Y}$ is defined by

$$\begin{aligned}\mathcal{Y} &= \{(K,T) \mid \exists w \in T \text{ such that } w \models (\mathsf{b}_0\mathsf{b}_1\mathsf{b}_2)^{\mathsf{x}}\} \\ &= \{(K,T) \mid \exists w \in T \text{ such that } w \models (\mathsf{b}_1\mathsf{b}_0\mathsf{b}_2)^{\mathsf{x}}\},\end{aligned}$$

and $k = \mathrm{md}(\mathsf{x} \subseteq \mathsf{b}_0\mathsf{b}_1\mathsf{b}_2) = \mathrm{md}(\mathsf{x} \subseteq \mathsf{b}_1\mathsf{b}_0\mathsf{b}_2)$.

(iii) Derivable by item (ii) and $\subseteq$Ctr.

□

Since we have proven that we have a complete proof system, let us demonstrate the power of the system by deriving some other interesting sound entailments.

Example 4.23. (i) $\Diamond(\top \subseteq \alpha) \vdash \Box(\top \subseteq \alpha)$.

(ii) If $\alpha \vdash \beta_1$ and $\alpha \vdash \beta_2$, then $\top \subseteq \alpha \vdash \top\top \subseteq \beta_1\beta_2$.

Proof. (i) We derive $\Diamond(\top \subseteq \alpha) \vdash \top \subseteq \Diamond\alpha \vdash \Box(\top \subseteq \alpha)$ by $\Diamond_{\subseteq}$Distr and $\Diamond\Box_{\subseteq}$Exc.

(ii) Suppose that $\alpha \vdash \beta_1$ and $\alpha \vdash \beta_2$.

$$\dfrac{\dfrac{\dfrac{\top \subseteq \alpha}{\top\top \subseteq \alpha\alpha}\subseteq\text{Wk} \quad \dfrac{[\alpha]}{\beta_1}}{\top\top \subseteq \beta_1\alpha}\text{Prop. 4.3 (ii)} \quad \dfrac{[\alpha]}{\beta_2}}{\top\top \subseteq \beta_1\beta_2}\text{Prop. 4.3 (ii)}$$

$\Box$

Chapter 5

Conclusion and future work

In this thesis, we defined a complete proof system for $\mathcal{MIL}$, which was previously missing from the literature. We also reviewed the expressive completeness proof for $\mathcal{MIL}$ in [18], and streamlined it by suggesting a simpler normal form for the logic. Next we suggest some possible directions for future work.

In this thesis, we defined a natural deduction proof system for $\mathcal{MIL}$. Since $\mathcal{MIL}$ is an extension of modal logic, introducing a sequent calculus for the logic would be desirable, and has been done for some other team logics (see [8]). Having a sequent calculus would be beneficial for studying the proof-theoretic properties of $\mathcal{MIL}$, such as cut-elimination and structural completeness. A point of difficulty could be that $\mathcal{MIL}$ does not admit uniform substitution, as seen in Proposition 2.17.

We observed that $\mathcal{MIL}$ does not admit the uniform substitution property, however, it is possible that $\mathcal{MIL}$ is closed under *flat* substitution. That is, does it hold for all formulas $\phi_1, \phi_2 \in \mathcal{MIL}$, that $\phi_1 \models \phi_2 \iff \phi_1(\alpha/p) \models \phi_2(\alpha/p)$, where α is a flat formula.

The main result of this thesis provides the axiomatization for one team-based modal logic. There are other variants of team-based modal logics still without axiomatizations. Two such examples are $\mathcal{ML}(\diamondsuit)$, as defined in Definition 3.33, and $\mathcal{MIL}$ extended with the global disjunction $\otimes$ (also known in the literature as intuitionistic disjunction, Boolean disjunction or classical disjunction), whose semantics is defined as

$$K, T \models \psi_1 \otimes \psi_2 \iff K, T \models \psi_1 \text{ or } K, T \models \psi_2.$$

To prove compactness of $\mathcal{MIL}$, we used compactness of modal team logic. Instead, one could attempt proving compactness directly, or possibly by translating $\mathcal{MIL}$ into first-order inclusion logic, which is compact.

Naturally, one could investigate possible applications of $\mathcal{MIL}$ in other fields, such as database theory and linguistics. A recent example of a connection between a union

closed team-based modal logic and natural language is presented in [1]. In [1], modal logic extended with the atom NE is used to model free-choice inferences in natural language, where a team satisfies the NE atom if and only if the team is nonempty.

Bibliography

[1] Aloni, M. *Logic and conversation: the case of free choice*, Semantics and Pragmatics, Volume 15, Article 5, (2022).

[2] Anttila, A. *The Logic of Free Choice: Axiomatizations of State-based Modal Logics*, Master's thesis, University of Amsterdam, (2021).

[3] Blackburn, P., Rijke, M., and Venema, Y. *Modal Logic (Cambridge Tracts in Theoretical Computer Science)*, Cambridge University Press, (2001).

[4] Casanova, M. A., Fagin, R., Papadimitriou, C. H. *Inclusion dependencies and their interaction with functional dependencies*, Proceedings of the 1st ACM SIGACT-SIGMOD symposium on Principles of database systems, PODS '82, (1982), pp. 171–176.

[5] Ciardelli, I. *Inquisitive semantics and intermediate logics*, Master's thesis, University of Amsterdam, (2009).

[6] Ciardelli, I., Barbero, F. *Undefinability in Inquisitive Logic with Tensor*, Blackburn, P., Lorini, E., Guo, M. (eds) Logic, Rationality, and Interaction. LORI 2019. Lecture Notes in Computer Science, vol 11813. Springer, (2019), pp 29–42

[7] D'Agostino G. *Uniform Interpolation for Propositional and Modal Team Logics*, Journal of Logic and Computation 29, 5 (September 2019), pp. 785–802.

[8] Frittella, S., Greco, G., Palmigiano, A., Yang, F. *A Multi-type Calculus for Inquisitive Logic*, in Proceedings of the 23rd Workshop on Logic, Language, Information and Computation (WoLLIC 2016), LNCS 9803, Springer-Verlag, (2016), pp. 213-233

[9] Galliani, P. *Epistemic operators in dependence logic*, Studia Logica, vol. 101 no. 2, (2013), pp. 367–397.

[10] Galliani, P. *Inclusion and exclusion dependencies in team semantics - on some logics of imperfect information*, Annals of Pure and Applied Logic, 163(1), (2012), pp. 68–84.

[11] Galliani, P., Hella, L. *Inclusion logic and fixed point logic*, Computer Science Logic 2013, LIPIcs vol. 23, Schloss Dagstuhl -Leibniz-Zentrum fuer Informatik, (2013), pp. 281–295.

[12] Goranko, V., Martin, O. *Model theory of modal logic*, Blackburn, P., et al. (eds) Handbook of Modal Logic, chapter 5, (2007).

[13] Grädel, E. *Games for inclusion logic and fixed-point logic*, Dependence Logic: Theory and Applications, Progress in Computer Science and Applied Logic. Birkhauser, (2016), pp. 73–98.

[14] Grädel, E., Väänänen, J. *Dependence and independence*, Studia Logica 101, 2 (April 2013), pp. 399–410.

[15] Hella, L., Kuusisto, A., Meier, A., Virtema, J. *Model checking and validity in propositional and modal inclusion logics*, Proceedings of MFCS 2017, (2017), pp. 32:1–32:14.

[16] Hella, L., Kuusisto, A., Meier, A., Vollmer, H. *Satisfiability of modal inclusion logic: Lax and strict semantics*, ACM Transactions on Computational Logic 21, 1 , Article no. 7, (2019).

[17] Hella, L., Luosto, K., Sano, K., Virtema, J. *The Expressive Power of Modal Dependence Logic*, Advances in Modal Logic, Volume 10, (2014).

[18] Hella, L., Stumpf, J. *The expressive power of modal logic with inclusion atoms*, In Proceedings Sixth International Symposium on Games, Automata, Logics and Formal Verification, (2015), pp. 129–143.

[19] Hodges, W. *Compositional semantics for a language of imperfect information*, Logic Journal of the IGPL 5, (1997), pp. 539–563.

[20] Hodges, W. *Some strange quantifiers*, Structures in Logic and Computer Science: A Selection of Essays in Honor of A. Ehrenfeucht, J. Mycielski, G. Rozenberg, and A. Salomaa, Eds., vol. 1261 of Lecture Notes in Computer Science. London: Springer, (1997), pp. 51–65.

[21] Hoelzel, M., Wilke, R. *On the union closed fragment of existential second-order logic and logics with team semantics*, Logical Methods in Computer Science, Volume 17, Issue 3, (2021), pp. 14:1–14:32.

[22] Kontinen, J., Müller, J.S., Schnoor, H., Vollmer, H. *A Van Benthem Theorem for Modal Team Semantics*, S. Kreutzer (Ed.), 24th EACSL Annual Conference on Computer Science Logic (CSL 2015) , (Leibniz International Proceedings in Informatics (LIPIcs)), Schloss Dagstuhl - Leibniz-Zentrum für Informatik, (2015), pp. 277-291.

[23] Lück, M. *Axiomatizations of Team Logics*, Annals of Pure and Applied Logic, Volume 169, Issue 9, (2018), pp. 928-969.

[24] Lück, M. *Team logic: axioms, expressiveness, complexity*, PhD thesis, Leibniz Universität Hannover, (2020).

[25] Väänänen, J. *Dependence Logic: A New Approach to Independence Friendly Logic*, Cambridge: Cambridge University Press, (2007).

[26] Väänänen, J. *Modal dependence logic*, Investigative Ophthalmology & Visual Science 4, (2008), pp. 237-254.

[27] Wang, H., Wang, Y., Wang, Y. *An Epistemic Interpretation of Tensor Disjunction*, arXiv.2203.13970, (2022).

[28] Yang, F. *Axiomatizing first-order consequences in inclusion logic*, Mathematical Logic Quarterly 66, 2 (July 2020), 195–216.

[29] Yang, F. *Modal dependence logics: axiomatizations and model-theoretic properties*, Logic journal of the IGPL, Vol. 25, No. 5, (2017), pp. 773-805.

[30] Yang, F. *Propositional union closed team logics*, Annals of Pure and Applied Logic, Volume 173, Issue 6, June 2022, 103102, (2022).

[31] Yang, F. *Uniform Definability in Propositional Dependence Logic*, Review of Symbolic Logic, Volume 10, Issue 1 (March 2017), pp. 65-79.

[32] Yang, F., Väänänen, J. *Propositional team logics*, Annals of Pure and Applied Logic 168, 7 (July 2017), pp. 1406–1441.