View metadata, citation and similar papers at core.ac.uk

brought to you by CORE

provided by HAL Descartes

A novel locus for generalized epilepsy with febrile seizures plus in French families.

Stéphanie Baulac, Isabelle Gourfinkel-An, Philippe Couarch, Christel Depienne, Anna Kaminska, Olivier Dulac, Michel Baulac, Eric Leguern, Rima Nabbout

To cite this version:

Stéphanie Baulac, Isabelle Gourfinkel-An, Philippe Couarch, Christel Depienne, Anna Kaminska, et al.. A novel locus for generalized epilepsy with febrile seizures plus in French families.. Archives of Neurology -Chigago-, American Medical Association, 2008, pp.65(7):943-51. <inserm-00306473>

HAL Id: inserm-00306473

http://www.hal.inserm.fr/inserm-00306473

Submitted on 28 Jul 2008

HAL is a multi-disciplinary open access archive for the deposit and dissemination of scientific research documents, whether they are published or not. The documents may come from teaching and research institutions in France or abroad, or from public or private research centers.

L'archive ouverte pluridisciplinaire **HAL**, est destinée au dépôt et à la diffusion de documents scientifiques de niveau recherche, publiés ou non, émanant des établissements d'enseignement et de recherche français ou étrangers, des laboratoires publics ou privés.

ORIGINAL CONTRIBUTION

A Novel Locus for Generalized Epilepsy With Febrile Seizures Plus in French Families

Stéphanie Baulac, PhD; Isabelle Gourfinkel-An, MD, PhD; Philippe Couarch, BS; Christel Depienne, PhD; Anna Kaminska, MD; Olivier Dulac, MD; Michel Baulac, MD; Eric LeGuern, MD, PhD; Rima Nabbout, MD, PhD

Background: Generalized epilepsy with febrile seizures plus (GEFS$^+$) is a familial autosomal dominant entity characterized by the association of febrile and afebrile seizures. Mutations in 3 genes—the sodium channel α1 subunit gene (*SCN1A*), the sodium channel β1 subunit gene (*SCN1B*), and the γ2 GABA receptor subunit gene (*GABRG2*)—and linkage to 2 other loci on 2p24 and 21q22 have been identified in families with GEFS$^+$, indicating genetic heterogeneity.

Objectives: To localize by means of linkage analysis a new gene for GEFS$^+$ in a large family with 11 affected members and to test the new locus in 4 additional families with GEFS$^+$.

Design: Family-based linkage analysis.

Setting: University hospital.

Patients: Five French families with GEFS$^+$ and at least 7 available affected members with autosomal dominant transmission. All the patients had febrile seizures and/or afebrile generalized tonic-clonic seizures or absence epilepsy.

Main Outcome Measures: We analyzed 380 microsatellite markers and conducted linkage analysis.

Results: In the largest family, a 10-cM-density genome-wide scan revealed linkage to a 13-Mb (megabase) interval on chromosome 8p23-p21 with a maximum pairwise logarithm of odds (LOD) score of 3.00 (at $\Theta = 0$) for markers *D8S351* and *D8S550* and a multipoint LOD score of 3.23. A second family with GEFS$^+$ was also possibly linked to chromosome 8p23-p21 and the region was narrowed to a 7.3-Mb candidate interval, flanked by markers *D8S1706* and *D8S549*. We have not, so far, identified mutations in the coding exons of 6 candidate genes (*MTMR9*, *MTMR7*, *CTSB*, *SGCZ*, *SG223*, and *ATP6V1B2*) located in the genetic interval.

Conclusions: We report a sixth locus for GEFS$^+$ on chromosome 8p23-p21. Because no ion channel genes are located in this interval, identification of the responsible gene will probably uncover a new mechanism of pathogenesis for GEFS$^+$.

Arch Neurol. 2008;65(7):943-951

Author Affiliations: INSERM, UMR_S679 Neurologie and Thérapeutique Expérimentale (Drs S. Baulac, Gourfinkel-An, Depienne, and LeGuern and Mr Couarch), UPMC Univ Paris 06, UMR_S679 (Drs S. Baulac, Gourfinkel-An, Depienne, and LeGuern and Mr Couarch), Epileptology Unit, AP-HP, Groupe Hospitalier Pitié-Salpêtrière (Drs Gourfinkel-An and M. Baulac), Department of Paediatric Neurology, Hôpital Necker Enfants Malades, AP-HP (Drs Kaminska, Dulac, and Nabbout), INSERM, UMR_S663 and University Paris Descartes (Drs Kaminska, Dulac, and Nabbout), and AP-HP, Assistance Publique Hôpitaux de Paris, Groupe Hospitalier Pitié-Salpêtrière, Département de génétique et cytogénétique (Drs Depienne and LeGuern), Paris, France.

GENERALIZED EPILEPSY with febrile seizures plus (GEFS$^+$) is a familial condition in which patients have febrile seizures (FSs) variably associated with epilepsy.[1] Febrile seizures are the most common convulsive event in humans, affecting 2% to 5% of children.[2] They are triggered by fever and typically occur between ages 6 months and 6 years; the outcome is benign. In families with GEFS$^+$, patients present with either FSs or FS$^+$. Patients with the FS$^+$ phenotype have FSs that persist beyond the classic age of 6 years, and they may be particularly numerous or may co-occur with afebrile seizures.[2] Variable types of afebrile seizures are observed in patients. Most often, these are generalized seizures (tonic-clonic, myoclonic, atonic, tonic, and absence seizures), but hemiconvulsive, temporal, and frontal seizures have also been observed.[3-5] Afebrile seizures may begin during childhood in association with FSs, after a variable seizure-free period, or in patients without a history of FSs. The disease course and the response to antiepileptic drugs are also highly variable within families, but seizures are most often controlled by classic antiepileptic drug treatment. When available, neuroimaging findings in epileptic patients are normal.

The GEFS$^+$ context is inherited as an autosomal dominant trait with incomplete penetrance. It is genetically heterogeneous. The voltage-gated sodium channel β1 subunit gene (*SCN1B* [OMIM 600235]) (19q13.1),[6] the sodium channel α1 subunit gene (*SCN1A* [OMIM 182389]) (2q21-q33),[7] and the γ2 GABA receptor subunit gene (*GABRG2* [OMIM 137164]) (5q34)[8,9] have been implicated in GEFS$^+$. More recently, 2 new GEFS$^+$ loci on 2p24 and 21q22 were reported, but the genes remain to be identified.[10,11] In addition, 3 loci for autosomal dominant FSs with a phenotype overlapping with GEFS$^+$

Downloaded from www.archneurol.com at Harvard University, on July 16, 2008
©2008 American Medical Association. All rights reserved.

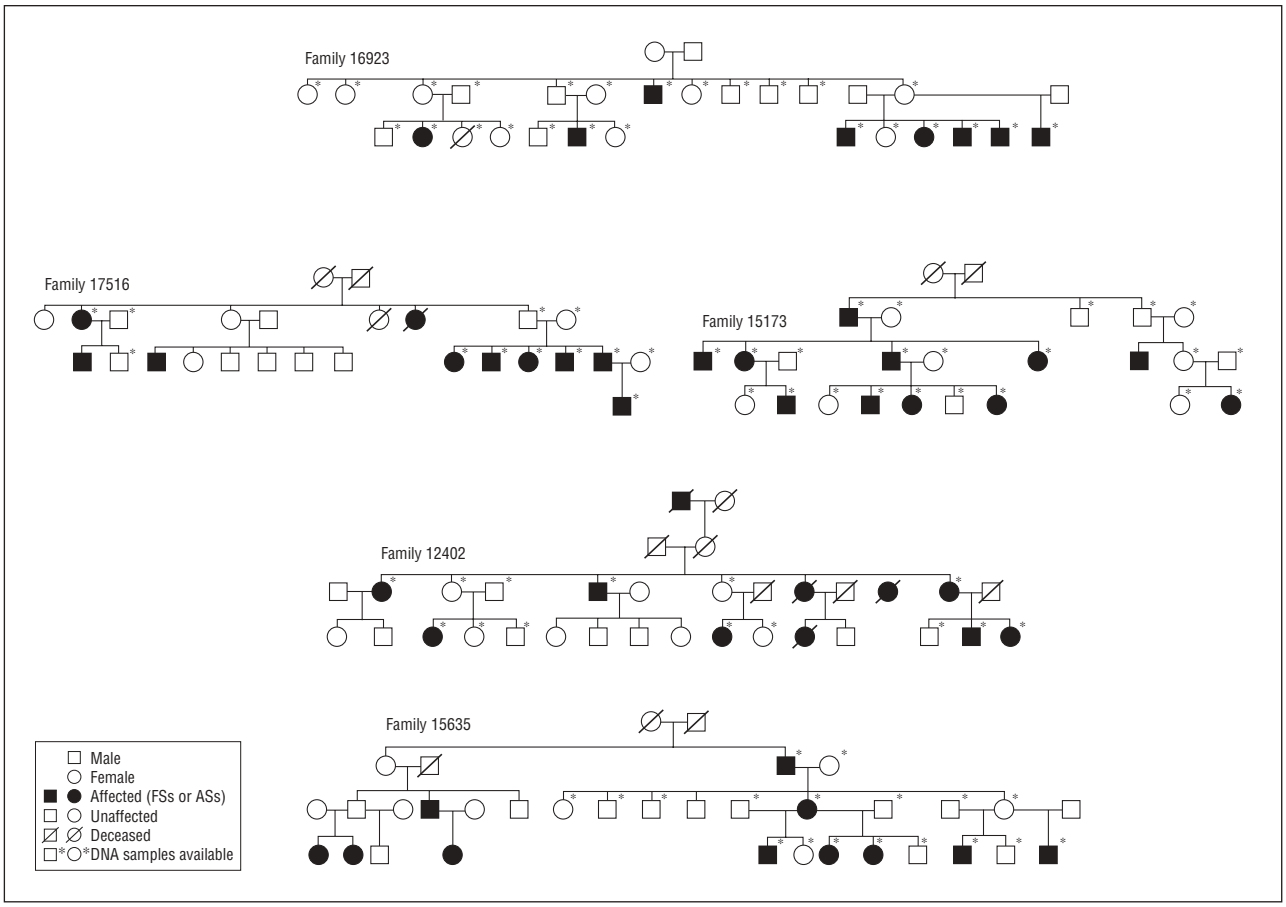

Figure 1. Pedigrees of the 5 families with generalized epilepsy with febrile seizures plus. AS indicates afebrile seizure; FS, febrile seizure.

have been reported: febrile convulsions 1 gene (*FEB1*) on chromosome 8q13-q21,[12] *FEB2* on 19p13,[13] and *FEB5* on 6q22-q24.[14]

Herein, we ascertained 5 French families with GEFS$^+$ without linkage to FS or GEFS$^+$ loci previously reported. Conclusive linkage to chromosome 8p23-p21 was obtained in a large multigenerational family, and, in a second family, linkage to the same locus was suggested.

METHODS

FAMILIES

Five French families with at least 7 affected members for whom DNA was available were identified during a national campaign organized by the Association de Recherche sur la Génétique des Epilepsies and supported by the French Généthon Center. Simplified pedigrees of the families are given in **Figure 1**. All members of the families underwent clinical assessment using a detailed questionnaire. Information was also obtained retrospectively from medical records. Informed consent was obtained from all the participants or from their legal representatives.

GENOTYPING

Genomic DNA was isolated from blood lymphocytes using standard procedures. Genome scans for families 15173 and 12402 were performed at the Centre National de Génotypage. The set consisted of 400 fluorescent microsatellite markers (including 20 for chromosome X that were not tested because of a male-to-male transmission in each family) selected from the Généthon human linkage map that cover the entire human genome with a resolution of approximately 10 cM. Subsequent markers used for fine mapping were genotyped as previously reported.[4]

LINKAGE ANALYSIS

We calculated parametric pairwise logarithm of odds (LOD) scores using the MLINK program and multipoint LOD scores using the Allegro program, assuming an autosomal dominant trait with a disease allele frequency of 0.0001, penetrance of 0.60, equal recombination fractions in males and females, and equal frequencies for the alleles observed in the families. These variables were also used to calculate theoretical maximum LOD scores using the "affected only" method. At-risk individuals I:4 (67 years old), II:8 (40 years old), III:3 (21 years old), and III:6 (11 years old) of family 15173 and at-risk individuals I:2 (60 years old), I:6 (69 years old), II:3 (33 years old), II:5 (40 years old), and II:6 (38 years old) of family 12402 were clinically normal and were, thus, considered to be unaffected. All individuals who experienced 1 or more FSs or afebrile seizures were considered to be affected.

SEQUENCING

A mutation search by means of direct sequencing was performed in the coding exons and flanking splice sites of 6 candidate genes (*MTMR9* [OMIM 606260], *MTMR7* [OMIM 603562], *CTSB* [OMIM 116810], *SGCZ* [OMIM 608113],

Downloaded from www.archneurol.com at Harvard University, on July 16, 2008
©2008 American Medical Association. All rights reserved.

Table 1. Clinical Features of Families 15173 and 12402 With Linkage to Chromosome 8p23-p21

Patient Pedigree/ Sex/Age, y	Febrile Seizures				Epileptic Seizures				
	First Occurrence	Last Occurrence	No.	Complex	First Occurrence	Last Occurrence	Pattern	No.	Interictal EEG
Family 15173									
I:2/M/76	1.5 y	4 y	5	Unknown	Not app	Not app	Not app	Not app	Normal
II:1/M/41	1 y	11 y	20	No	30 y	40 y	GTCSs	2[a]	Rare generalized SWs
II:3/F/46	1 y	10 y	15	No	Not app	Not app	Not app	Not app	NA
II:4/M/47	1 y	11 y	50[b]	Yes	1 y	40 y	GTCSs	Several	NA
II:6/F/49	1 y	1 y	1	No	Not app	Not app	Not app	Not app	NA
II:7/M/41	1.5 y	1.5 y	1	No	Not app	Not app	Not app	Not app	NA
III:2/M/16	10 mo	16 mo	3	No	Not app	Not app	Not app	Not app	NA
III:4/M/19	1 y	1 y	1	No	Not app	Not app	Not app	Not app	NA
III:5/F/17	1 y	5 y	>5	No	15 y	17 y	Absences + GTCSs	Several	Rare generalized SWs
III:7/F/7	1 y	6.5 y	>10	Yes	Not app	Not app	Not app	Not app	NA
III:9/F/11	8 mo	8 mo	1	No	Not app	Not app	Not app	Not app	NA
Family 12402									
I:1/F/59	14 mo	6 y	>5	No	Not app	Not app	Not app	Not app	NA
I:4/M/61	12 mo	6 y	5	Yes	1 y	9 y	GTCSs	3	NA
I:8/F/66	18 mo	8 y	>10	No	Not app	Not app	Not app	Not app	NA
II:2/F/37	24 mo	24 mo	1	No	10 y	35 y	Absences + GTCSs	Several + 1	Generalized SWs (3 Hz); photosensitivity
II:4/F/46	Not app	Not app	Not app	Not app	16 y	18 y	Absences + GTCSs	Many +1	Generalized SWs (3 Hz); photosensitivity
II:7/F/43	9 mo	4 y	4	Yes	Not app	Not app	Not app	Not app	NA
II:8/M/33	12 mo	3 y	3	No	Not app	Not app	Not app	Not app	NA
I:10/F/died at 14 (cranial trauma)	Not app	Not app	Not app	Not app	7 y	Unknown	Absences	Many	NA
I:11/F/died at 50 (unknown)	Not app	Not app	Not app	Not app	15 y	50 y	Partial (right frontotemporal)	Several	Slow waves frontotemporal; photosensitivity
II:9/F/died at 21 (suicide)	Not app	Not app	Not app	Not app	13 y	Until death	Partial (right temporal)	1/mo	Slow waves frontotemporal; photosensitivity

Abbreviations: EEG, electroencephalogram; GTCS, generalized tonic-clonic seizure; NA, not available; Not app, not applicable; SW, spike wave.
[a] One seizure occurred with sleep deprivation and alcohol intake, another during treatment with antidepressant.
[b] Mixture of febrile and afebrile seizures.

SG223, and *ATP6V1B2* [OMIM 606939]). The genomic organization of the candidate genes and the primer sequences were obtained from the University of California Santa Cruz Web site (http://genome.ucsc.edu/) and are available on request. Polymerase chain reaction products were sequenced on both strands on an ABI3730 automatic sequencer using the Big Dye Terminator Cycle sequencing kit (Applied Biosystems, Foster City, California).

RESULTS

CLINICAL CHARACTERISTICS

Family 15173

We identified a 3-generation kindred with 22 family members: 11 affected individuals with a history of at least 1 FS, 3 of whom also had afebrile seizures, 2 unaffected obligate carriers, 5 unaffected individuals, and 5 married-in individuals (**Table 1** and **Figure 2**). No blood sample was available for patient II:7, who experienced 1 FS.

The FSs began at age 8 months to 1.5 years and persisted beyond age 6 years in 4 patients (II:1, 11 years; II:3, 10 years; II:4, 11 years; and III:7, 6.5 years). The number of FSs was particularly high in 3 patients in generation II despite the prescription of antiepileptic drugs (20 episodes of FS in patient II:1 and 15 in patient II:3). In addition, individual II:4 had an association of FSs and afebrile seizures; he experienced a total of 50 seizures between ages 1 to 11 years. Two individuals had complex FSs: II:4 had 1 prolonged FS followed by transitory hemiplegia at 1 year of age and another prolonged FS without a motor deficit 6 months later, and III:7 had several FSs lasting more than 30 minutes, 1 of which was followed by transitory hemiplegia.

Three individuals (II:1, II:4, and III:5) also had afebrile seizures. Individual II:1 had 1 generalized tonic-clonic seizure (GTCS) during a period of sleep deprivation and alcohol intake and another seizure during treatment with an antidepressant drug. Interictal electroencephalography (EEG) showed rare generalized spike waves in this patient. Individual II:4, after the period (1-11 years) of mixture of FSs and afebrile seizures, was completely seizure-free until age 40 years, when he had an afebrile GTCS in a context of stress and sleep deprivation. An EEG was not available. None of these patients was receiving antiepilep-

Downloaded from www.archneurol.com at Harvard University, on July 16, 2008
©2008 American Medical Association. All rights reserved.

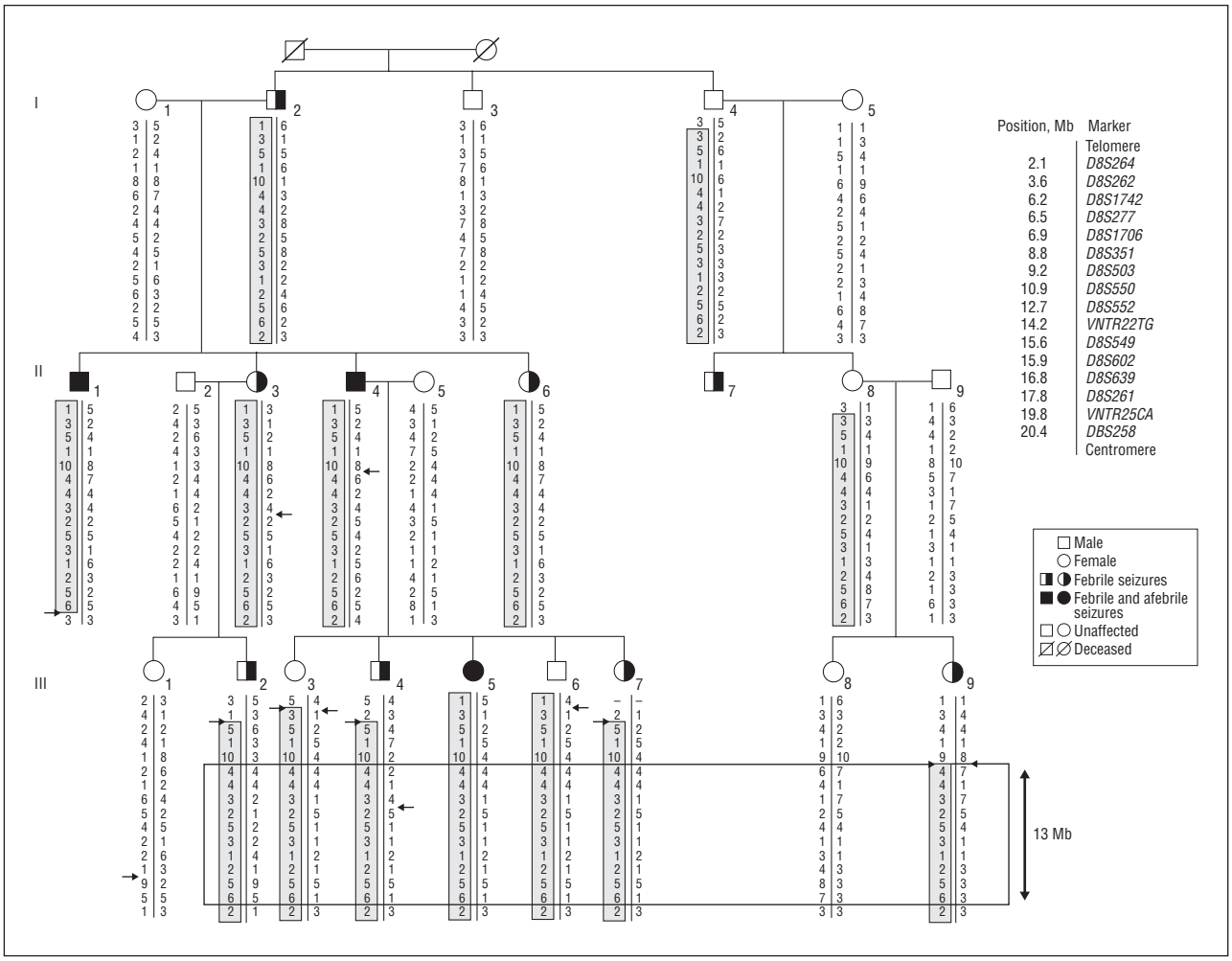

Figure 2. Haplotype reconstruction for chromosome 8p23-p21 markers in family 15173. Microsatellite and VNTR markers are ordered from telomere to centromere according to the University of California Santa Cruz genome map. The haplotype segregating with the disease is boxed. Observed recombinations are indicated by arrows. Mb indicates megabase.

tic drugs when examined. For individual III:5, GTCSs and absences began during adolescence. Interictal EEG showed rare generalized spike waves. All affected family members have had normal psychomotor development, and even individuals with a high number of or complex FSs have had good school performance.

Family 12402

In this second 4-generation family, 11 individuals were affected (data were available for only 10 individuals) (Table 1 and **Figure 3**). Four individuals were dead at the time of this study; DNA was, therefore, available for only 7 individuals. Six of these 7 patients had FSs, with ages at onset ranging from 9 to 24 months. All FSs stopped before or at age 6 years except in 1 patient (I:8) who had his last FS at age 8 years. He also had the highest number of episodes (>10 FSs). The FSs were simple in 4 patients, consisting of brief GTCS, but in 2 patients (I:4 and II:7) they lasted up to 15 to 20 minutes (complex FSs).

Two patients (II:2 and II:4) also had absence epilepsy, with late childhood onset and a 3-Hz spike wave pattern recorded by means of EEG. In addition, in patient I:4, afebrile GTCS occurred during the same period as FSs and stopped by age 9 years. Three family members who died before the study had epilepsy with no reported FSs: the first had absence epilepsy (I:10), and the other 2 had temporal lobe seizures beginning in adolescence (I:11 and II:9). The cause of death was undetermined for patient I:11. Absence epilepsy in this family was of late onset (I:10, 7 years; II:2, 10 years; and II:4, 16 years) and highly photosensitive. No lesions were observed by means of magnetic resonance imaging (MRI) in patients with temporal lobe epilepsy. Psychomotor development was normal in all affected family members. Performance in school of patient II:2 declined from age 12 years; she was oriented toward a profession at age 16 years.

Families 16923, 17516, and 15635

In family 16923 (8 affected individuals), FSs were simple, infrequent (n=1-4), and stopped before age 6 years. Two patients had afebrile GTCS at ages 3 and 6 years and were fully controlled with antiepileptic drug monotherapy.

In family 17516, 10 patients had FSs, which were simple, recurred 2 to 3 times except in 1 patient (n=8), and stopped before 6 years of age. Three patients had afebrile GTCS that occurred once in 1 patient (age at oc-

Downloaded from www.archneurol.com at Harvard University, on July 16, 2008
©2008 American Medical Association. All rights reserved.

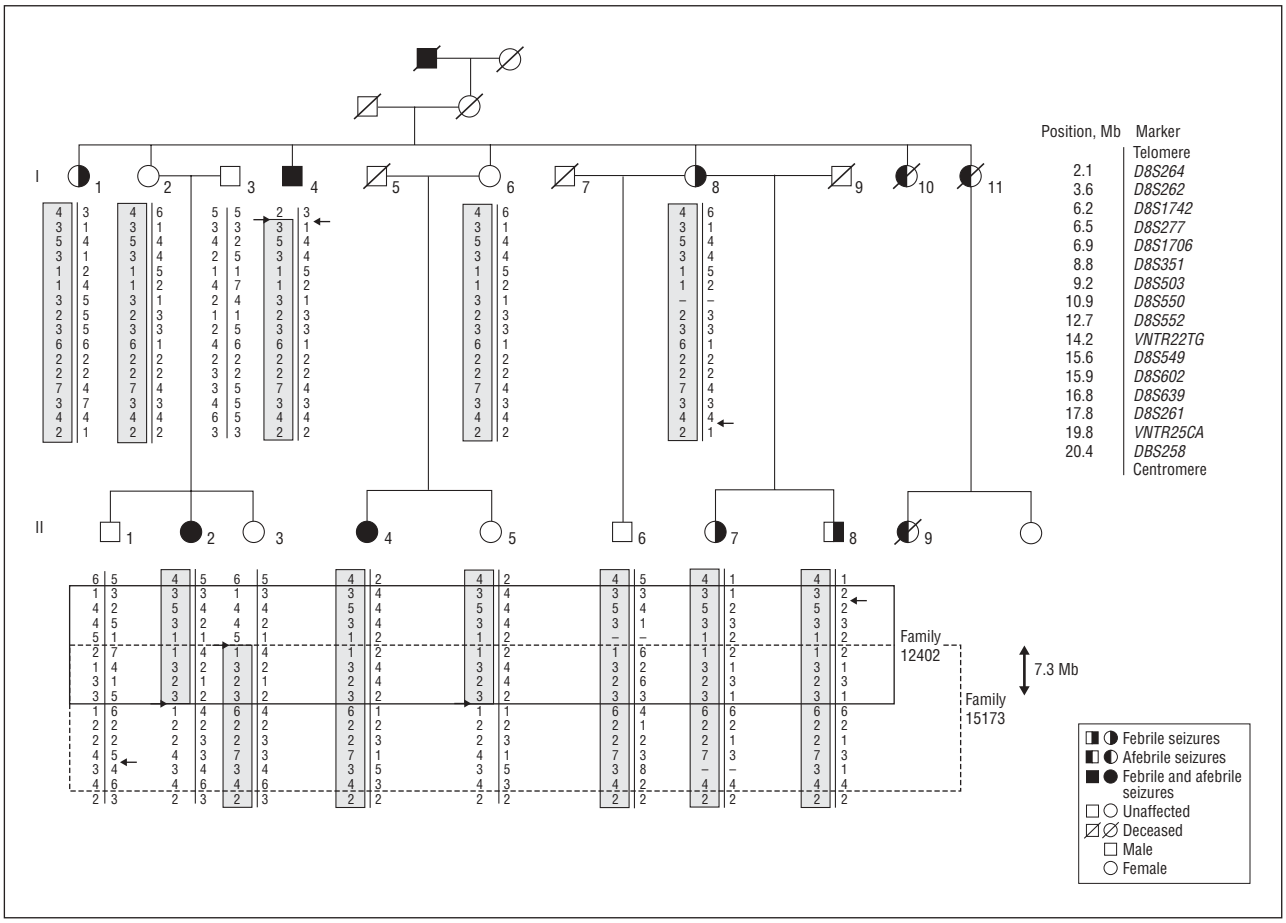

Figure 3. Haplotype reconstruction for chromosome 8p23-p21 markers in family 12402. Microsatellite and VNTR markers are ordered from telomere to centromere according to the University of California Santa Cruz genome map. The haplotype shared by members of family 12402 is surrounded by solid lines. The haplotype shared by members of family 15173 is surrounded by dashed lines. Observed recombinations are indicated by arrows. Mb indicates megabase.

currence unknown) but recurred 3 times in the other 2 patients, at ages 4 and 9 years. Seizures in these 2 patients were fully controlled by antiepileptic drug monotherapy.

In family 15635, 9 patients had simple FSs that stopped before age 6 years. One patient had 1 afebrile GTCS at 12 years of age, and 2 half-brothers developed rare partial seizures in adolescence. Their brain MRIs were normal. They were not pharmacoresistant at the time of this study and were 17 and 20 years of age. Their mother had isolated FSs. All affected members of these 3 families had normal psychomotor development.

LINKAGE ANALYSIS

Exclusion of Known FS and GEFS$^+$ Loci

We first examined whether any of the 5 families presented linkage to previously reported loci for GEFS$^+$ and FS. Negative pairwise LOD scores were obtained in all 5 families, excluding the following loci as the cause of the disease: 19q13 (*SCN1B*), 2q24 (*SCN1A*), 5q34 (*GABRG2*), 2p24 (GEFS$^+$4), 21q32 (GEFS$^+$5), 8q13-21 (*FEB1*), 19p13 (*FEB2*), and 6q22-24 (*FEB5*) (data not shown).

We then calculated the maximal theoretical pairwise LOD scores to determine which families were sufficiently informative to map a new gene. Using the affected only method, at $\Theta = 0.0$, family 15173 (DNA available for 10 affected members) had a Z_{max} of 3.06, family 12402 (DNA available for 7 affected members) had a Z_{max} of 1.7, family 16923 (DNA available for 8 affected members) had a Z_{max} of 2.7, family 15635 (DNA available for 7 affected members) had a Z_{max} of 1.8, and family 17516 (DNA available for 7 affected members) had a Z_{max} of 1.8.

Genomewide Scan in Family 15173

A genome scan of all autosomes was conducted with 380 microsatellite markers in family 15173, the only family in which the theoretical maximal pairwise LOD score reached the threshold value of 3.00 in linkage analyses. Calculation of pairwise LOD scores revealed 20 of 380 noninformative markers, which were excluded by means of haplotype reconstruction (data not shown). In addition, positive pairwise LOD scores were obtained for 6 markers (*D10S208*, *D15S130*, *D16S423*, and *D18S61* and the 2 adjacent markers *D8S351* and *D8S550*). Fine mapping with additional markers (*D10S183*, *D10S199*, *D15S531*, *D15S207*, *D16S3030*, *D16S3134*, *D18S1125*, and *D18S386*) excluded the regions on chromosomes 10, 15, 16, and 18. In contrast, genotyping of 14 additional markers (*D8S264*, *D8S262*, *D8S1742*, *D8S277*, *D8S1706*,

Downloaded from www.archneurol.com at Harvard University, on July 16, 2008
©2008 American Medical Association. All rights reserved.

Table 2. Pairwise LOD Scores for 15 Markers on Chromosome 8p23-p21 From Telomere (Top) to Centromere (Bottom) for Family 15173 and Family 12402

	LOD Scores													
	Θ=0		Θ=0.01		Θ=0.05		Θ=0.10		Θ=0.20		Θ=0.30		Θ=0.40	
Marker	AO	AR	AO	AR	AO	AR	AO	AR	AO	AR	AO	AR	AO	AR
Family 15173														
D8S262	−9.61	−3.56	−3.45	−2.85	−1.50	−1.70	−0.77	−1.09	−0.23	−0.53	−0.08	0.28	0.05	0.14
D8S1742	−3.83	0.30	−0.27	0.36	0.31	0.51	0.47	0.57	0.48	0.54	0.38	0.42	0.22	0.23
D8S277	1.16	1.16	1.14	1.14	1.03	1.03	0.90	0.90	0.63	0.62	0.35	0.34	0.10	0.10
D8S1706	−3.03	0.95	0.88	1.14	1.39	1.38	1.44	1.41	1.22	1.18	0.83	0.80	0.37	0.36
D8S351	3.00[a]	2.57	2.95	2.52	2.73	2.33	2.46	2.08	1.87	1.56	1.22	1.00	0.56	0.45
D8S503	2.06	1.68	2.02	1.64	1.82	1.48	1.58	1.27	1.07	0.84	0.56	0.40	0.15	0.09
D8S550	3.00[a]	2.57	2.95	2.52	2.73	2.33	2.46	2.08	1.87	1.56	1.22	1.00	0.56	0.45
D8S552	1.78	1.28	1.74	1.25	1.59	1.14	1.38	1.00	0.95	0.68	0.51	0.35	0.13	0.08
VNTR22TG	2.63	2.28	2.58	2.24	2.39	2.07	2.14	1.86	1.62	1.38	1.05	0.87	0.47	0.36
D8S549	2.37	2.16	2.32	2.12	2.15	1.97	1.92	1.78	1.44	1.34	0.93	0.87	0.42	0.39
D8S602	2.93	2.30	2.88	2.27	2.67	2.12	2.40	1.92	1.82	1.48	1.19	0.98	0.54	0.45
D8S639	2.67	2.44	2.62	2.40	2.43	2.23	2.18	2.00	1.65	1.51	1.08	0.97	0.50	0.44
D8S261	1.77	1.40	1.74	1.38	1.62	1.29	1.46	1.18	1.14	0.92	0.79	0.65	0.41	0.34
VNTR25CA	2.97	2.72	2.91	2.68	2.70	2.48	2.43	2.23	1.85	1.68	1.22	1.08	0.56	0.48
D8S258	−2.95	0.90	0.85	1.06	1.36	1.27	1.42	1.29	1.22	1.07	0.86	0.73	0.43	0.36
Family 12402														
D8S262	2.03	1.71	1.99	1.68	1.83	1.55	1.62	1.38	1.17	0.99	0.68	0.56	0.20	0.16
D8S1742	1.44	1.39	1.41	1.36	1.27	1.24	1.10	1.08	0.74	0.74	0.39	0.39	0.11	0.11
D8S277	1.39	1.15	1.36	1.13	1.23	1.03	1.06	0.91	0.71	0.62	0.37	0.33	0.10	0.09
D8S1706	1.69	1.61	1.66	1.58	1.51	1.44	1.31	1.26	0.91	0.87	0.50	0.47	0.15	0.14
D8S351	1.05	0.43	1.02	0.42	0.90	0.38	0.75	0.33	0.47	0.22	0.23	0.12	0.06	0.03
D8S503	1.40	0.76	1.37	0.74	1.22	0.66	1.04	0.56	0.67	0.35	0.33	0.17	0.09	0.04
D8S550	1.41	0.72	1.37	0.70	1.22	0.62	1.04	0.52	0.67	0.32	0.33	0.16	0.09	0.04
D8S552	0.80	0.68	0.78	0.67	0.72	0.61	0.63	0.53	0.45	0.37	0.25	0.20	0.08	0.06
VNTR22TG	−4.10	−0.17	−0.68	−0.07	−0.09	0.12	0.08	0.20	0.14	0.19	0.09	0.10	0.03	0.03
D8S549	0.81	0.69	0.79	0.68	0.71	0.60	0.61	0.51	0.40	0.34	0.21	0.17	0.06	0.05
D8S602	0.81	0.69	0.79	0.68	0.71	0.60	0.61	0.51	0.40	0.34	0.21	0.17	0.06	0.05
D8S639	−4.00	−0.17	−0.33	−0.05	0.24	0.18	0.37	0.27	0.34	0.26	0.20	0.15	0.06	0.04
D8S261	0.51	0.41	0.50	0.40	0.46	0.37	0.41	0.32	0.29	0.22	0.16	0.12	0.05	0.03
VNTR25CA	0.81	0.69	0.79	0.68	0.71	0.60	0.61	0.51	0.40	0.34	0.21	0.17	0.06	0.05
D8S258	0.81	0.47	0.78	0.45	0.69	0.39	0.57	0.31	0.33	0.16	0.14	0.05	0.03	0.01

Abbreviations: AO, "affected only" method; AR, all at-risk individuals; LOD, logarithm of odds.
[a]Maximum LOD scores.

D8S351, *D8S503*, *D8S552*, *VNTR22TG*, *D8S602*, *D8S639*, *D8S261*, *VNTR25CA*, and *D8S258*) confirmed linkage on chromosome 8p23-p21. Maximal pairwise LOD scores were 3.00 at Θ=0.0 for *D8S351* and *D8S550* calculated using the affected only method (**Table 2**). The scores recalculated with inclusion of all at-risk individuals yielded pairwise LOD scores slightly below 3.00 (Table 2) because of incomplete penetrance. Under these conditions, multipoint analysis with 15 markers generated a maximal LOD score of 3.23 in the interval flanked by *D8S351* and *VNTR25CA*; the remaining genome was excluded (data not shown).

Haplotype reconstruction showed that all patients shared a common haplotype encompassing markers *D8S351* (chromosome 8: 8 714 310-8 914 565) to *VNTR25CA* (chromosome 8: 19 887 367-19 887 416) (Figure 2). The boundaries of this interval were defined by a recombination between markers *D8S1706* and *D8S351* in patient III:9 and a recombination between markers *VNTR25CA* and *D8S258* in patient II:1. This genetic interval (*D8S1706-D8S258*) corresponds to a 13-Mb (megabase) large region located on chromosome 8p23.1-p21.3, according to the University of California Santa Cruz Genome Browser (http://genome.ucsc.edu/).

Genotyping of the Other Families

After establishing linkage at chromosome 8p23-p21 in family 15173, the 4 smaller families with GEFS$^+$ were analyzed. We obtained pairwise LOD scores less than −2 for 8p23-p21 markers in families 16923, 17516, and 15635 (data not shown) but positive pairwise LOD scores in family 12402. The maximum pairwise LOD score was 2.03 for *D8S262* calculated using the affected only method (Table 2). Multipoint analysis gave maximal LOD scores of 2.14 in the interval *D8S262* to *D8S1706* when all at-risk individuals were included (data not shown). Haplotype reconstruction showed that the 7 affected patients and the obligate carrier I:6 had a common haplotype of 12 Mb (*D8S262-D8S552*), defined by a recombination between markers *D8S264* and *D8S262* in patient I:4 and a recom-

Downloaded from www.archneurol.com at Harvard University, on July 16, 2008
©2008 American Medical Association. All rights reserved.

Table 3. Candidate Genes Explored in the 8p23-p21 Interval[a]

Gene Symbol	Position in Bases at Chromosome 8	Protein	Potential Role in Epilepsy
SG223	8 212 676-8 276 667	Tyrosine-protein kinase	Homology with rat pragma of Rnd2, which is involved in the migration of pyramidal neurons[15]
MTMR9	11 179 410-11 223 064	Myotubularin-related protein 9	Brain binding partner of *MTMR7*[16]
CTSB	11 739 236-11 744 571	Cathepsin B	Upregulated after seizures provoked by hippocampal kindling[17]
SGCZ	13 991 744-15 140 163	Sarcoglycan zeta	Abundant in the brain[18]
MTMR7	17 203 534-17 250 961	Myotubularin-related protein 7	Brain binding partner of *MTMR9*[16]
ATP6V1B2	20 098 984-20 123 487	ATP synthase subunit B	High levels of expression in the brain[19]

[a] The *MTMR7* and *ATP6V1B2* genes are located outside of the common interval of both families but were initially screened because they were included in the interval segregating in family 15173.

bination between markers *D8S552* and *VNTR22TG* in patient II:2. This haplotype encompassed a region of 7.3 Mb that overlapped with the haplotype segregating in family 15173, suggesting that both families are linked to the same locus on chromosome 8p23-p21 (Figure 3). However, the allele combinations differed in the 2 families, excluding a common ancestor.

Genomewide Scan in Family 12402

To confirm that FSs in family 12402 were caused by a mutation in a gene located in this 8p23-p21 locus and that it did not segregate with the disease by chance, we performed a whole genome scan using 380 microsatellite markers. Calculation of pairwise LOD scores showed that 55 of 380 markers were not informative; they were excluded by means of haplotype reconstruction. Two adjacent noninformative markers, *D16S3103* and *D16S3046*, were excluded after saturation of the interval with markers *D16S3062*, *D16S405*, *D16S3041*, *D16S3017*, and *D16S412*. In addition, positive pairwise LOD scores were obtained for 11 of 380 markers (*D1S2726*, *D4S1534*, *D5S422*, *D6S462*, *D8S277*, *D13S171*, *D17S787*, *D19S902*, *D19S418*, *D19S226*, and *D22S420*). Areas on chromosomes 1, 4, 6, and 17 were excluded by means of haplotype reconstruction. Additional microsatellite markers (*D5S412*, *D13S260*, *D13S1493*, *D13S1293*, *D13S1246*, *D19S879*, *D19S556*, *D19S545*, *D19S892*, *D19S879*, and *D22S427*) were further genotyped to exclude the regions on chromosomes 5, 13, 19, and 22. Because the remaining genome was excluded, we concluded that family 12402 was likely linked to this new locus on 8p23-p21.

SEQUENCING OF CANDIDATE GENES

According to Ensembl (http://www.ensembl.org), the genetic interval of interest spans 7.3 Mb and contains approximately 80 known genes. The region contains no ion channel or neurotransmitter genes. We prioritized the genes according to their patterns of expression in the brain and putative functions and sequenced 6 candidate genes—*MTMR9, MTMR7, CTSB, SGCZ, SG223,* and *ATP6V1B2*—in patient II:4 of family 15173 and in patient I:8 of family 12402 (**Table 3**). Some sequence variants were identified in each gene, but they were already mentioned in databases as polymorphisms or were found in 100 matched French controls.

COMMENT

We recruited 5 French families with a phenotype compatible with GEFS$^+$. The disorder segregated as an autosomal dominant trait with incomplete penetrance in all families. Most patients in the 5 families experienced simple FSs (93%) and some afebrile seizures (34%), mostly GTCSs or absence seizures. None of the families were linked to the previously reported GEFS$^+$ and FS loci.

A 10-cM-density genomewide scan in the most informative family (15173) revealed a unique region with significant maximum pairwise LOD scores of 3.00 and multipoint LOD scores of 3.23 on chromosome 8p23-p21, which strongly suggests that we have identified a new locus for GEFS$^+$. Because all other regions of the genome were excluded, we believe that the responsible gene is probably localized in this interval. Furthermore, when the 4 other families were then tested for linkage to this novel locus, we obtained evidence of probable linkage in 1 family (12402) to a region of 7.3 Mb that overlapped the locus on chromosome 8p23-p21 in family 15173. Although a linkage in family 12402 might have been obtained by chance, the absence of any other positive region is in favor of a conclusive linkage. Furthermore, all affected family members shared the same haplotype, and no phenocopies were identified. Although 4 unaffected individuals (including 2 obligate carriers) in family 15173 and 5 (including 2 obligate carriers) in family 12402 also carried the haplotype associated with the disease, this illustrates an incomplete penetrance of GEFS$^+$ associated with 8p23-p21. This would not be unusual because reduced penetrance of 60% has previously been reported in families with GEFS$^+$,[12] and it was estimated to be 64% in a collection of families with FSs.[20] The present data suggest that this locus is involved in 2 of the 5 families tested, suggesting that it might not be a rare locus.

We described in detail the clinical features of the 2 families, 15173 and 12402, linked to the new locus on chromosome 8p23-p21. In family 15173, all affected individuals experienced FSs, and 3 of 11 also experienced

Downloaded from www.archneurol.com at Harvard University, on July 16, 2008
©2008 American Medical Association. All rights reserved.

afebrile seizures. Four patients reported the occurrence of FSs after age 6 years and experienced many episodes of FS, or a combination of FSs and afebrile seizures, which were defined as "FS plus."[1] Family 12402 had 11 affected members. Febrile seizures were present in 6 patients, complex in 2, and lasted until 8 years of age in 1 patient (I:8). The FSs recurred more than 5 times in half of these patients, with more than 10 episodes in patient I:8. In addition, 3 patients also developed afebrile seizures: GTCSs in 1 and absence epilepsy in 2. Three patients had epilepsy with no history of FSs (partial epilepsy in 2 and absences in the third). Frequent absences have already been reported in other families with GEFS$^+$.[21,22] Both families corresponded to the description of the familial GEFS$^+$ context.

In the literature, phenotype-genotype correlations have been reported in families with GEFS$^+$. For example, the proportion of patients with FS$^+$ was higher in families with *SCN1A* mutations than in families with *GABRG2* mutations.[23] In the present study, families with linkage to the 8p23-p21 locus had a higher proportion of patients with FS$^+$ than did families without linkage (28% vs 7%). Furthermore, there was a high rate of recurrence of FSs in 53% of patients from families linked to chromosome 8p23-p21, whereas frequent recurrence was reported in only 1 of 27 patients (4%) from families excluded for this locus. Complex FSs were observed in only the 2 families linked to chromosome 8p23-p21 (4 of 17 patients). Afebrile seizures co-occurred with FSs in at least 1 patient per family except for family 15635. Because none of the patients had FS$^+$ in this family, it was considered to be a family with epilepsy and FSs rather than typical GEFS$^+$.

The new locus contains approximately 80 known genes, none of which are known or predicted to encode ion channels, neurotransmitter receptors, or proteins homologous to others involved in epilepsy. Twenty of the genes encode defensins and were not considered as candidates for epilepsy. Thirty genes encode unknown proteins. To identify the causative gene, we sequenced the coding regions and flanking splicing sites of genes encoding proteins expressed in brain or with a putative role in epilepsy (Table 3). So far, no causal mutations have been identified in the coding regions of the following genes: *CTSB*, *SGCZ*, *SG223*, *MTMR9*, *MTMR7,* and *ATP6V1B2*. We hope that elucidation of the function of the unknown proteins encoded by genes located in the interval will provide new candidates to screen for FSs and epilepsy. In parallel, we will search for rearrangements that are reported to be frequent in the 8p23 region.[24,25]

Identification of additional families with GEFS$^+$ linked to the 8p23-p21 region will reinforce linkage to this new locus, the sixth to be identified for this disorder. This might also narrow the candidate interval and consequently decrease the number of candidate genes to explore. So far, 3 genes have been implicated in GEFS$^+$: *SCN1A*, *SCN1B,* and *GABRG2*. Except for leucine-rich glioma inactivated 1 (*LGI1)* and EF-hand domain (C-terminal) containing 1 (*EFHC1)*, all other genes involved in idiopathic monogenic epilepsies encode ion channel or neurotransmitter receptor genes.[26] It is, thus, interesting that the novel locus reported herein does not contain genes with functions similar to those already implicated in epilepsy. Identification of the responsible gene in 8p23-p21 might bring to light a new mechanism involved in epileptogenesis.

Accepted for Publication: February 27, 2008.
Correspondence: Stéphanie Baulac, PhD, INSERM, UMR679, Groupe Hospitalier Pitié-Salpêtrière, 47 boulevard de l'hôpital, 75013 Paris, France (baulac@ccr.jussieu.fr).
Author Contributions: All authors had full access to all of the data in the study and take responsibility for the integrity of the data and the accuracy of the data analysis. *Study concept and design:* S. Baulac, Gourfinkel-An, Dulac, M. Baulac, LeGuern, and Nabbout. *Acquisition of data:* S. Baulac, Gourfinkel-An, Couarch, Kaminska, and Nabbout. *Analysis and interpretation of data:* S. Baulac, Gourfinkel-An, Depienne, and LeGuern. *Drafting of the manuscript:* S. Baulac, Gourfinkel-An, Couarch, LeGuern, and Nabbout. *Critical revision of the manuscript for important intellectual content:* S. Baulac, Gourfinkel-An, Depienne, Kaminska, Dulac, M. Baulac, LeGuern, and Nabbout. *Obtained funding:* S. Baulac, M. Baulac, and Nabbout. *Administrative, technical, and material support:* Couarch, Kaminska, and Dulac. *Study supervision:* S. Baulac, Gourfinkel-An, and LeGuern.
Financial Disclosure: None reported.
Funding/Support: This study was funded by the Association de Recherche sur la Génétique des Epilepsies, Sanofi-Aventis, and grant P020910/AOR02085 from the Projet Hospitalier de Recherche Clinique.
Additional Contributions: We are grateful to the patients and their families. Guillaume Achaz, PhD, and Etienne Loire, GS, provided in silico help; Giovanni Stevanin, PhD, provided helpful advice on linkage analysis; Merle Ruberg, PhD, provided critical reading; the Association de Recherche sur la Génétique des l'Epilepsie (directed by O. Dulac, MD, PhD) organized the national campaign to locate affected individuals; the Centre National de Génotypage performed genotyping; and the IFR70 and French Généthon Center performed DNA extraction (project supervised by J. F. Prud'homme, PhD).

REFERENCES

1. Scheffer IE, Berkovic SF. Generalized epilepsy with febrile seizures plus: a genetic disorder with heterogeneous clinical phenotypes. *Brain.* 1997;120(pt 3):479-490.
2. Hauser WA. The prevalence and incidence of convulsive disorders in children. *Epilepsia.* 1994;35(suppl 2):S1-S6.
3. Abou-Khalil B, Ge Q, Desai R, et al. Partial and generalized epilepsy with febrile seizures plus and a novel *SCN1A* mutation. *Neurology.* 2001;57(12):2265-2272.
4. Baulac S, Gourfinkel-An I, Picard F, et al. A second locus for familial generalized epilepsy with febrile seizures plus maps to chromosome 2q21-q33. *Am J Hum Genet.* 1999;65(4):1078-1085.
5. Singh R, Scheffer IE, Crossland K, Berkovic SF. Generalized epilepsy with febrile seizures plus: a common childhood-onset genetic epilepsy syndrome. *Ann Neurol.* 1999;45(1):75-81.
6. Wallace RH, Wang DW, Singh R, et al. Febrile seizures and generalized epilepsy associated with a mutation in the Na+-channel β1 subunit gene *SCN1B. Nat Genet.* 1998;19(4):366-370.
7. Escayg A, MacDonald BT, Meisler MH, et al. Mutations of *SCN1A*, encoding a neuronal sodium channel, in two families with GEFS+2. *Nat Genet.* 2000;24(4):343-345.

Downloaded from www.archneurol.com at Harvard University, on July 16, 2008
©2008 American Medical Association. All rights reserved.

8. Baulac S, Huberfeld G, Gourfinkel-An I, et al. First genetic evidence of GABA(A) receptor dysfunction in epilepsy: a mutation in the γ2-subunit gene. *Nat Genet*. 2001;28(1):46-48.
9. Wallace RH, Marini C, Petrou S, et al. Mutant GABA(A) receptor γ2-subunit in childhood absence epilepsy and febrile seizures. *Nat Genet*. 2001;28(1):49-52.
10. Audenaert D, Claes L, Claeys KG, et al. A novel susceptibility locus at 2p24 for generalised epilepsy with febrile seizures plus. *J Med Genet*. 2005;42(12):947-952.
11. Hedera P, Ma S, Blair MA, et al. Identification of a novel locus for febrile seizures and epilepsy on chromosome 21q22. *Epilepsia*. 2006;47(10):1622-1628.
12. Wallace RH, Berkovic SF, Howell RA, Sutherland GR, Mulley JC. Suggestion of a major gene for familial febrile convulsions mapping to 8q13-21. *J Med Genet*. 1996;33(4):308-312.
13. Johnson EW, Dubovsky J, Rich SS, et al. Evidence for a novel gene for familial febrile convulsions, *FEB2*, linked to chromosome 19p in an extended family from the Midwest. *Hum Mol Genet*. 1998;7(1):63-67.
14. Nabbout R, Prud'homme JF, Herman A, et al. A locus for simple pure febrile seizures maps to chromosome 6q22-q24. *Brain*. 2002;125(pt 12):2668-2680.
15. Nakamura K, Yamashita Y, Tamamaki N, et al. In vivo function of Rnd2 in the development of neocortical pyramidal neurons. *Neurosci Res*. 2006;54(2):149-153.
16. Mochizuki Y, Majerus PW. Characterization of myotubularin-related protein 7 and its binding partner, myotubularin-related protein 9. *Proc Natl Acad Sci U S A*. 2003;100(17):9768-9773.
17. D'Amato E, Kokaia Z, Nanobashvili A, et al. Seizures induce widespread upregulation of cystatin B, the gene mutated in progressive myoclonus epilepsy, in rat forebrain neurons. *Eur J Neurosci*. 2000;12(5):1687-1695.
18. Shiga K, Yoshioka H, Matsumiya T, et al. Zeta-sarcoglycan is a functional homologue of γ-sarcoglycan in the formation of the sarcoglycan complex. *Exp Cell Res*. 2006;312(11):2083-2092.
19. van Hille B, Richener H, Schmid P, et al. Heterogeneity of vacuolar H(+)-ATPase: differential expression of two human subunit B isoforms. *Biochem J*. 1994;303(pt 1):191-198.
20. Johnson WG, Kugler SL, Stenroos ES, et al. Pedigree analysis in families with febrile seizures. *Am J Med Genet*. 1996;61(4):345-352.
21. Marini C, Harkin LA, Wallace RH, et al. Childhood absence epilepsy and febrile seizures: a family with a GABA(A) receptor mutation. *Brain*. 2003;126(pt 1):230-240.
22. Nabbout R, Baulac S, Desguerre I, et al. New locus for febrile seizures with absence epilepsy on 3p and a possible modifier gene on 18p. *Neurology*. 2007;68(17):1374-1381.
23. Baulac S, Gourfinkel-An I, Nabbout R, et al. Fever, genes, and epilepsy. *Lancet Neurol*. 2004;3(7):421-430.
24. Giglio S, Broman KW, Matsumoto N, et al. Olfactory receptor-gene clusters, genomic-inversion polymorphisms, and common chromosome rearrangements. *Am J Hum Genet*. 2001;68(4):874-883.
25. Shimokawa O, Kurosawa K, Ida T, et al. Molecular characterization of inv dup del(8p): analysis of five cases. *Am J Med Genet A*. 2004;128(2):133-137.
26. Gourfinkel-An I, Baulac S, Nabbout R, et al. Monogenic idiopathic epilepsies. *Lancet Neurol*. 2004;3(4):209-218.

Announcement

Trial Registration Required. In concert with the International Committee of Medical Journal Editors (ICMJE), *Archives of Neurology* will require, as a condition of consideration for publication, registration of all trials in a public trials registry (such as http://ClinicalTrials.gov). Trials must be registered at or before the onset of patient enrollment. This policy applies to any clinical trial starting enrollment after July 1, 2005. For trials that began enrollment before this date, registration will be required by September 13, 2005, before considering the trial for publication. The trial registration number should be supplied at the time of submission.

For details about this new policy, and for information on how the ICMJE defines a clinical trial, see the editorial by DeAngelis et al in the January issue of *Archives of Dermatology* (2005;141:76-77). Also see the Instructions to Authors on our Web site: www.archneurol.com.

Downloaded from www.archneurol.com at Harvard University, on July 16, 2008
©2008 American Medical Association. All rights reserved.