The Dissertation Committee for Chen Na

certifies that this is the approved version of the following dissertation:

IEEE 802.11 Wireless LAN Traffic Analysis: A Cross-layer Approach

Committee:

Theodore S. Rappaport, Supervisor

James C. Browne

Gustavo de Veciana

Jeffrey G. Andrews

Sanjay Shakkottai

Harrick M. Vin

IEEE 802.11 Wireless LAN Traffic Analysis: A Cross-layer Approach

by

Chen Na, M.S.E.E., B.S.E.E.

Dissertation

Presented to the Faculty of the Graduate School of

The University of Texas at Austin

in Partial Fulfillment

of the Requirements

for the Degree of

Doctor of Philosophy

The University of Texas at Austin

May 2005

This dissertation is dedicated to my wife, Xuejiao Liu, and my parents,

Yuxiu Lei and Xinbang Na

Acknowledgments

I am deeply indebted to my supervisor, Prof. Theodore S. Rappaport, for his encouragement, advice, mentoring, and research support throughout my doctoral studies. I also truly appreciate his patience and tolerance during my numerous trials and errors and his guidance keeping me on the right track. This dissertation is part of the research carried out through his vision.

I am also sincerely grateful to my committee members, Dr. Gustavo de Veciana, Dr. Jeffrey G. Andrews, Dr. James C. Browne, Dr. Harrick M. Vin, and Dr. Sanjay Shakkottai for their help and input regarding the dissertation. I would also like to thank Prof. William C. Bard for his support during the network measurement campaigns.

I am fortunate to have the opportunity to be part of the Wireless Networking and Communications Group (WNCG) working with a group energetic and talented colleagues. I would like to especially thank Jeremy K. Chen and Huihui Wang for sharing research ideas. Thanks also go to WNCG industrial affiliates for supporting our research.

During the course of this work, I was supported in part by Schlotzsky's

Inc. under research contract UTA 03-390, and grant from the National Science Foundation ACI-0305644. Wireless Valley Communication, Inc., donated the LANFielder and LANPlanner software tools.

Finally, it is impossible for me to finish my Ph.D. study without support and encouragement from my wife and my parents. This dissertation is dedicated to them.

Chen Na

The University of Texas at Austin

May 2005

IEEE 802.11 Wireless LAN Traffic Analysis: A Cross-layer Approach

Publication No. _____

Chen Na, Ph.D.

The University of Texas at Austin, 2005

Supervisor: Theodore S. Rappaport

The deployment of broadband wireless data networks, e.g., wireless local area networks (WLANs) [29], experienced tremendous growth in the last several years, and this trend is continuously gaining momentum. In fact, WLAN is becoming an indispensable component of the modern telecommunication infrastructure. Despite this optimistic outlook, however, little is known about the impact of the wireless channel on the characteristics of WLAN traffic. This dissertation characterizes the correlation structures of WLAN channel with traffic statistics from a cross-layer point of view, and provides new measurement methodologies and statistical models for WLAN networks.

Currently WLAN standards are designed within the paradigm of the layered network architecture. For example, the architecture of IEEE 802.11

is almost identical to the Ethernet. However, wireless networks are fundamentally different from their wired peers due to the shift of transmission media from cables to over-the-air radio waves. This transition exposes wireless systems to the influence of radio propagation, and more importantly, to the temporal and spacial fluctuations of the radio channel that can actually be propagated up to upper layers. However, the current WLAN architecture isolates network layers, and largely ignores this impact. Therefore, we believe that a cross-layer based approach is necessary to understand and reflect this underlying impact of the channel to the upper layers of the network, especially in relation to WLAN traffic behavior.

Measurement is one of the fundamental tools used to quantify radio propagation. As part of this dissertation, a complete framework for a measurement methodology, including hardware, software, and measurement procedures, is established. Characteristics of the propagation channel are estimated from measurement data, and the channel knowledge is applied to the upper layers for more realistic and accurate modeling.

In WLAN environments, knowledge of the traffic characteristics is essential for proper network provisioning, and for improving the performance of the IEEE 802.11 standard and network devices, e.g., to design improved MAC schemes, or to build better buffer scheduling algorithms with channel knowledge, etc. Built upon extensive WLAN traffic traces, this dissertation work presents cross-layer models for WLAN throughput predictions, traffic statistics, and link layer characteristics.

The main goal of this dissertation work is to experiment with and develop new methods for identifying channel characteristics. Thereby utilizing this knowledge, we show how to predict and improve WLAN performance. Within the framework of the developed cross-layer measurement methodology, we conducted extensive measurements in different physical environments and different settings such as office buildings and stores, and (1) show that the impact of the propagation channel can be quantified by using simple large scale channel metric (throughput over longer period of time), and (2) also present the existence of a Doppler effect within today's WLAN packet traffic at sub-second time scales. We also show the real-world WLAN usage pattern from our measurement results. From this data, we conclude that the key issues to study WLAN networks include accurate site-specific propagation channel modeling and real-time autonomous traffic control.

Contents

List of Tables

List of Figures

Chapter 1

Introduction

1.1 Objectives

There has been intense interest in the worldwide deployment of wireless local area networks (WLANs) during the past few years. WLANs that provide high-speed data services to the general public are becoming popular at public sites such as university campuses, hotels, business buildings, and restaurants. Moreover, WLAN technology will start to play an incrementally critical role in the home networking arena. Along with WLAN deployment, the WLAN user base is also expected to expand dramatically. Therefore, it is evident that WLAN will be an important component in next generation communication infrastructure.

Despite this phenomenal growth and optimistic outlook, however, there are surprisingly few research works that address the issues appearing in the

the deployment and design of WLANs, in particular, from the WLAN packet traffic point of view. This dissertation work takes a cross-layer point of view and provides characterizations of WLAN traffic across a broad spectrum, from the data link layer up to the application layer, and from millisecond observation intervals up to weekly timescales.

The complexity of modeling and analyzing WLAN traffic originates from the unique position of WLAN, which combines characteristics of both cellular communications and computer networks. Compared to cellular systems, WLANs support higher data-rate packet traffic in a random-access fashion, therefore packets are more often delayed or corrupted. Compared to the Ethernet, however, WLANs operate over radio environments and have to propagate through radio propagation channels with abundant fading and interference. Therefore, while WLAN technology gains ground by providing broadband connections and tether-less convenience to end users at low cost, it remains a difficult task to thoroughly model WLAN traffic characteristics and therefore reliably predict WLAN performance.

The fundamental difference between wired networks and wireless networks is the radio transmission media. Therefore, it is essential to study the channel for understanding the modeling issues which appear at higher layers in WLAN traffic studies. Historically, measurement has been an extremely valuable tool to quantify and model propagation characteristics of the radio media. This approach has been proved to be effective and productive [50]. Even though WLAN is different from most previous wireless systems, espe-

cially regarding the media access control (MAC) mechanism, the fundamental radio propagation laws still hold and continues to influence WLAN packet transmission. Thus, channel measurements are necessary to model WLAN environments.

In WLAN environments, knowledge of the traffic characteristics is essential for proper network provisioning, and for improving the performance of the IEEE 802.11 standard and network devices, e.g., to design improved MAC schemes, or to build better buffer scheduling algorithms with channel knowledge, etc. Built upon extensive WLAN traffic traces, this dissertation work presents cross-layer models for WLAN throughput predictions and traffic statistics.

On the other hand, it is well-known that channel state information, if available, can be intelligently exploited to improve system performance [7, 38]. By utilizing actual traffic to estimate channel parameters, not only could we reduce the overhead involved in some algorithms, but also yield better site-specific channel estimation. This dissertation work also suggests that WLAN traffic can be used to intelligently estimate radio channel by revealing relationship between the Doppler shifts to the correlation variations at the link layer.

1.2 Organization

This dissertation is organized in 6 chapters. The structure of this dissertation is as follows. Chapter 1 provides an overview of the objectives and organizations of this dissertation work, and outlines the main contributions.

Chapter 2 presents measurement results, i.e., (1) typical traffic statistics, and (2) application-level throughput prediction models, of real-world WLANs. The measured traffic statistics and throughput prediction models can benefit and guide future WLAN deployment.

Chapter 3 details the analysis of captured WLAN packet traffic and presents the sub-second scale characteristics of WLAN traffic. The resulting traffic correlation structure differs from existing wired traffic results, which inspires subsequent study in Chapter 4.

Chapter 4 demonstrates that the correlation structure of IEEE 802.11b channel is influenced by Doppler shifts, especially when the SNR level is at the critical level. The time scales of such influence in typical 802.11b networks are located at the sub-second regime. This chapter shows the promising outlook of better channel predictions and time scale correlations for IEEE 802.11 networks with adequate site-specific knowledge.

Chapter 5 presents the measurement methodologies used throughout this work, including choices of hardware and software tools, and procedures to conduct measurements in different environments.

Finally, Chapter 6 reviews the contributions of the dissertation and

suggests directions for future research.

1.3 Contributions

The contributions of the dissertation work are as follows:

1. We develop a suite of cross-layer measurement methodologies that take into account the requirement of conducting measurements of channel and the upper network layers simultaneously (Chapter 5). The measurement frame work was thoroughly verified through our extensive measurement campaigns (Chapter 2, 3, and 4).

2. Two application layer throughput models are established through measurements and are verified through blind tests (Chapter 2. The models capture the channel characteristics by measuring the average signal-to-noise ratio (SNR), which quantifies the large-scale fading characteristics of radio channels. Blind test results show that both models are very accurate in quantifying achievable throughput with measured or predicted SNR values, and can be used in conjunction with channel prediction tools to predict network performance *prior to* WLAN deployment (Chapter 2).

3. Hotspot traffic statistics are measured at three commercial hotspots. To the best of our knowledge, this is the first published work on hotspot traffic statistics in the literature. This result provides insights into the required provisioning for PWLANs and autonomous control approaches

for future broadband wireless access and real-time wireless voice/video services (Chapter 2).

4. We conducted extensive measurements in different environments under various settings, and show that the impact of the propagation channel can be quantified not only at large scales (throughput over longer periods of time), but also over small sub-second time scales. The impact of the channel on WLAN packet traffic at sub-second time scales is identified and modeled, and is attributed mostly to Doppler shifts caused by relative movements during radio propagation. This result complements out previous results, i.e., that application level throughput correlates to SNR over larger time scales. More importantly, this result may lead to link-layer channel models that consider the physical characteristics of the channel, such as Doppler shifts and multipath propagation (Chapter 3 and 4).

Publications that resulted from this dissertation include [46, 42, 45, 43, 44].

Chapter 2

WLAN Traffic Statistics: Large Scale Behavior

2.1 Introduction

Application-level performance perceived by users dictates the user experience. For WLAN users, even though the highest transmission rate specified in IEEE 802.11b is 11 Mbps, the throughput perceived by users, i.e., the amount of data transmitted from transmitting applications to receiving applications in a certain period, is significantly lower than this specified transmission rate in practice. Besides factors such as the MAC mechanism, hostile radio channels play key roles in inducing the performance loss. Temporal and spatial radio channel variations [50] are caused by the site-specific physical environment which degrades WLAN transmission performance and hence the throughput

perceived by end users.

This chapter presents measurement results on two critical aspects that are important in deploying and provisioning WLANs: (1) typical traffic statistics, and (2) application-level throughput performance as experienced by an end user. As part of this dissertation, traffic statistics and coverage/throughput models were developed using data measured from real-world hotspots in the summer of 2003 [46, 42, 14]. The traffic measurement campaign involved over 14,400 minutes of hotspot traffic and 15,983,748 packets measured at two Schlotzsky's restaurants. The throughput measurement campaign included measurements at 33 locations in and around three Schlotzsky's restaurants, with a total of 792 different throughput and signal-to-noise ratio (SNR) measurements. This measurement campaign gave insight into user behavior and traffic models at actual hotspots, and provided a baseline of performance modeling.

Our traffic study showed that:

- As of the summer of 2003, most WLAN traffic loads are highly asymmetric, with much higher inbound traffic (from the Internet to the WLAN). The ratio of outbound to inbound traffic load measured was found to be about 1:5 on average and 1:6 during busy hours.

- Traffic volume is dominated by the presence of a small number of users, e.g., users downloading large files or using peer-to-peer (P2P) applications.

- The majority of the users use "traditional" Internet services. For example, web browsing and newsgroup reading were the two most frequently used protocols observed from this measurement campaign.

- The most commonly visited Internet sites include web-based email services, on-line auction services, on-line gaming sites, and Usenet news reading.

Our throughput measurement results showed that:

- WLAN performance varies with many factors, such as user locations, building layouts, and surrounding environments outside of the building.

- The application-level throughput in an IEEE 802.11b network is closely correlated with the perceived SNR, as measured by the client. Furthermore, empirical models were established to model application throughput to provide accurate throughput predictions for new environments.

This chapter is organized as follows. In section 2.3, we explain the tools and procedures used in this measurement campaign. Section 2.4 presents obtained hotspot traffic statistics in two restaurants. Section 2.5 shows the measurement results of single-user throughput data in three restaurants. Also, two empirical models are presented that accurately model application-level throughput with SNR in IEEE 802.11b WLANs. In section 2.6, we conclude this chapter. The work documented in this chapter was funded by Schlotzsky's Deli and the National Science Fundation, and also supported the M.S. thesis of Jeremy K. Chen.

2.2 Literature Background

Kotz and Essien [39] reported their measurement results that spanned 3 months on the Dartmouth college campus in 2001. These results are helpful in provisioning WLANs, as they provided typical number of users, typical session time per user, and user behaviors. The measurement data presented in [39] may be used to estimate future system capacity requests, or to calibrate user activity distribution parameters. For example, [39] reported that network backup and file sharing applications produced almost 30 percent of the traffic on the network. Also, measurement data in [39] confirmed the need for better roaming support in WLAN. However, [39] did not address the coverage and throughput performance of various applications on WLANs. Moreover, the traffic statistics were more relevant to WLANs deployed in university campuses, and not typical of a restaurant chain in an urban setting.

Tang and Baker [57] measured the WLAN traffic in the building of the Stanford Computer Science Department during the 1999 fall quarter. Their results represent the traffic statistics of typical university buildings occupied by computer science professionals with commonly seen applications in 1999. In [57], the authors observed a ratio of 1:3 between outbound and inbound traffic, while our 2003 results show a ratio of 1:5. In addition, [57] reported that 70% of packets were smaller than 200 bytes, while we observed 60% of the packets are smaller than 200 bytes. However, [57] presented several similar findings to our results, e.g., HTTP remains to be the most popular protocol.

Balachandran et. al. [4] examined 195 IEEE 802.11b users during an ACM meeting in an auditorium at U.C. San Diego in August 2001. In [4], traffic load could be correlated to the conference schedule, which is similar to the results presented here. However, [4] did not delve into the impact of traffic statistics on WLAN performance, which is an important objective in this dissertation work.

Balazinska and Castro [5] studied user mobility patterns in a large corporate environment. They relied on periodical queries from access points (APs) to collect network statistics, which is different from the packet-by-packet measurement methodology used in this study. However, the work in [5] corroborates our finding that WLAN traffic load is influenced more by the aggressive users than the number of users in the network.

In summary, the above literature shows that the perceived application-level throughput by individual WLAN users is profoundly influenced by radio frequency (RF) propagation, as well as the type of applications used by the user community. However, most of the past research works have focused on individual layers, e.g., the application layer, the MAC layer or the physical layer, and have ignored the interactions among layers. To the best of our knowledge, Henty and Rappaport [27] first systematically studied the correlation between application-level throughput and physical layer propagation properties in the IEEE 802.11b environment.

Work in [27] presents the WLAN measurement results in an engineering building at Virginia Tech. The authors conducted a series of measurements

at various locations in the building with one and two laptop computers. The measurement data were used to derive empirical models that represents the correlation between throughput and signal-to-noise ratio. The work in [27] related signal-to-noise ratio to throughput and yielded throughput models based on intuitive, simple, yet accurate empirical modeling. The work presented in this chapter expands on [27] for realistic WLAN environments with a vast number of measurement points and diversified applications.

2.3 Measurement Setup

In this section, we describe the network structures, configurations of hardware platforms, and software utilities used in this measurement campaign.

2.3.1 Description of Measurement Sites

Schlotzsky's deli provides free Internet service in and around the premises of their restaurants using IEEE 802.11b equipment. Four Schlotzsky's restaurants in Austin, Texas were chosen as measurement sites. These sites are named Guadalupe, Parmer, Northcross, and Lamar. Each of the four restaurants is a stand-alone structure with a parking lot, and each, except Parmer, is located in an urban area in downtown Austin.

The Lamar restaurant is located at a busy intersection and near a recreation area. It has the highest WLAN traffic load among the four measurement sites.

The Guadalupe restaurant is located three blocks away from a large dormitory building near the University of Texas at Austin and hence accommodates more college-aged customers.

The Parmer restaurant has a large number of customers from the high-tech industry, as it is very close to several offices of Dell Computer Corporation and Samsung Austin Semiconductor.

The Northcross restaurant is located in a shopping mall area. It is the smallest among the four restaurant sites and sees the lowest WLAN traffic load.

Several desk-mounted Apple iMac computers are also conveniently provided for customers in each restaurant, and while they are desk-mounted, they are also wirelessly connected to the WLAN network. In addition, users may bring in or use in the parking lot their own IEEE 802.11b enabled equipment at anytime for use with the WLAN.

Among the four restaurants, average traffic volume is highest at the Lamar restaurant and is lowest at the Northcross measurement site. For example, the average hourly bi-directional throughput during busy hours was about 10 MB at the Lamar restaurant, but the Northcross measurement site experienced less than 2.4 MB. Thus, these two sites may represent two disparate, yet representative, hotspots. Therefore, Lamar and Northcross were the selected sites for detailed traffic statistics studies, while the Guadalupe, Parmer, and Northcross restaurants were used as throughput measurement sites.

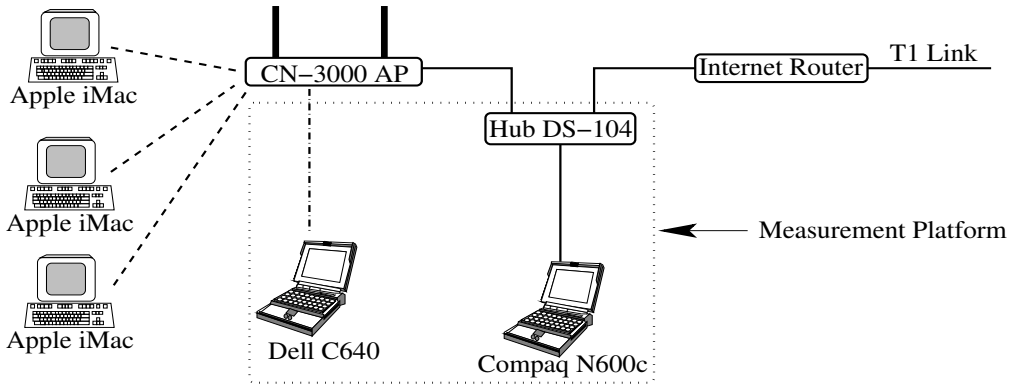

Figure 2.1: The typical network structure in Schlotzsky's restaurants during measurement periods

2.3.2 Measurement Site WLAN Infrastructure

Each of the four restaurants is equipped with a Colubris Networks CN-3000 AP, which connects to the Internet via a T1 link. Fig. 2.1 shows the WLAN structure of a typical measurement site. The CN-3000 AP is IEEE 802.11b compliant with a built-in antenna. However, one or more external antennas may be attached to the AP. All CN-3000 APs are configured such that no RTS (request to send) and CTS (clear to send) [30] handshake packets is exchanged prior to data transmission at the MAC layer to reduce traffic overhead.

2.3.3 Measurement Hardware/Software Tools

This section describes hardware and software tools used in the Schlotzsky's measurement campaign.

Measurement Hardware

In this measurement campaign, one Compaq Evo N600c laptop computer was connected together with the CN-3000 AP to a Netgear DS-104 Ethernet hub, as shown in Fig. 2.1. This laptop computer served as both an application server for the throughput measurements and a packet sniffer in the traffic capturing processes.

During throughput measurements, a Dell Latitude C640 laptop computer was configured as a client machine. Two different IEEE 802.11b PCMCIA wireless network interface cards (NICs), the Cisco Aironet 350 and ORiNOCO Gold, were used equally with the Dell client laptop during measurements. Because of different algorithms and design choices made internally by each vendor, the main objective of using NICs from two representative vendors was to identify and aggregate the performance difference between two different NICs, as would be seen in most WLANs with walk-in traffic.

Traffic Capturing Environment

During the traffic capturing process, the program *tcpdump* 3.7.2 was run on the Compaq laptop, which was installed with the Debian Linux 3.0 operating system (OS) to capture WLAN traffic. Because the CN-3000 AP, the Internet router, and this sniffing computer were all connected to the same hub, as shown in Fig. 2.1, any packet sent to and from the WLAN was captured and saved by *tcpdump* for processing.

Table 2.1: Throughput Measurement Tools

	Client	Server
Computer	Dell C640	Compaq N600c
OS	Windows XP	Windows XP
NIC	Cisco/ORiNOCO	N/A
FTP	Wget	IIS
LANFielder	LANFielder Client	LANFielder Server
Iperf	Iperf Client	Iperf Server
SNR	LANFielder/netstumbler	N/A

Throughput Measurement Environment

During throughput measurement campaigns, three applications, *LANFielder* 7.0.2 from Wireless Valley Communication, Inc., *Iperf* 1.7.0, and FTP, were selected to benchmark WLAN performance. The characteristics of these three applications are described subsequently.The server components of the applications operated on the Compaq laptop, while the corresponding clients ran on the portable Dell laptop. The servers and clients communicated wirelessly. To record signal-to-noise ratios of the client side, *netstumbler* 0.3.30 and *LANFielder* were used. Due to hardware/firmware implementation differences of Aironet and ORiNOCO wireless cards, *netstumbler* was used upon the ORiNOCO card and LANFielder was used with the Cisco 350 card to record correct SNRs. Table 2.1 summarizes the tools used in throughput measurements.

2.3.4 Considerations in Designing Measurement Procedures

Two seperated measurements were conducted in Schlotzsky's measurement campaign. The first measurement was to quantify the actually hotspot traffic statistics while the other was to evaluate the correlation between the channel and application layer throughput. Several experimental design considerations were made to ensure different applications provided realistic hotspot traffic measurements, throughput measurements, and performance metrics representative of WLANs.

Traffic Capturing

A key consideration in measuring traffic statistics was to ensure very little artificial traffic would be generated by measurement systems. Two specific measures were taken to guarantee this criterion. First, *tcpdump* was launched in a non-intrusive manner such that no packet would be generated by *tcpdump*. Second, integrity checking processes[1] were conducted during 1:00 to 1:15 a.m. each day during the seven-day measurement campaign when the network experienced virtually no user traffic. In fact, only a low overhead remote shell was opened during the late-night integrity check operation. Hence, any artificially generated traffic could be eliminated off-line by identifying timestamps and protocols.

[1]Integrity checks are required to ensure measurement software and hardware are functioning properly.

As designed, the AP handled all internal traffic between users and shielded the sniffing computer from logging traffic between users in the restaurant. However, because most users were strangers to one another, and used the public Apple iMac computers or their own laptops, the likelihood of such internal communications was thought to be very rare.

Throughput Measurement Considerations

SNR at each mobile client was chosen as the primary metric to measure radio channel conditions. IEEE 802.11b WLAN is designed to transmit wide-band modulated digital symbols over RF channels [30]. Hence, 802.11b symbols shall experience frequency-selective fading, which implies little fluctuations of received signal strength at the receiver side [50] for each symbol transmission. Therefore, the major difference between two distinct transmissions is the received SNR levels. Thus, SNR is one of the most important parameters, if not the most important one, to characterize RF channel conditions in IEEE 802.11b WLANs.

It is well known that interference as specified by the signal-to-interference (SIR) ratio, is the primary limiting factor for attaining high throughput in cellular wireless communication systems, and [27] considered throughput models based on SIR as well as SNR. However, the work presented in this chapter focuses on studying the achievable throughput of a typical WLAN environment, which, in most cases, is a single "cell" covered by a "base station", i.e., the AP, with limited coverage area. The CSMA/CA mechanism in IEEE 802.11 is

designed to mitigate interference through carrier sensing, and it is especially effective within the WLAN setting. Thus, while SIR is a factor in cellular reuse schemes, the CSMA/CA multiple access technique used in the IEEE 802.11 networks avoids any substantial SIR in a WLAN setting. Moreover, as described subsequently, the throughput measurement procedure was performed in the absence of other interfering wireless systems, e.g., other 802.11b AP or Bluetooth devices. Therefore, SIR is not considered in this dissertation work.

Several environmental factors may affect throughput measurement results. For example, wireless channels vary as objects in the vicinity of transmission, such as customers, vehicles, etc. move throughout the premises, thereby creating multipath and Doppler effects [50]. To keep interference from people and vehicles around measurement sites at a minimum, throughput measurements were conducted late at night or early in the morning, outside normal business hours.

For each of the three restaurants studied, eleven locations were chosen in and around the restaurant to measure SNR and throughput values. The eleven locations represent common points from which wireless users connect to the WLAN service. Moreover, these locations yielded a wide range of received signal levels. At each location, both the Cisco and the ORiNOCO NICs were used with three different applications for throughput measurements. Each measured data set was recorded by sending ten seconds of data using each of the three applications, and each data set consisted of three averaged measurement values: received signal strength intensity (RSSI), noise level, and

application throughput. Furthermore, throughput measurements were made with the client laptop positioned successively toward the four cardinal directions: north, east, south, and west. In total, 264 data sets were measured at each restaurant, with each data set being decided by a combination of 11 locations, 2 NICs, 3 applications, and 4 directions.

Descriptions of Applications Used in Throughput Measurement

Each of the three applications, *LANFielder*, *Iperf*, and *wget*, operates differently. *LANFielder* repeatedly sends a single packet back and forth between the server and the client, and reports throughput as the ratio of successfully received packet size to time length. *Iperf* tunes the optimal TCP sliding-window size, which determines the amount of data that exist in the network, and then reports throughput as the maximum TCP bandwidth. *Wget*, as a standard FTP client, reports throughput as the rate at which a file is retrieved from an FTP server. On the other hand, both *Iperf* and *Wget* report application-level throughput using the TCP protocol. However, *Iperf* reports throughput values by using optimal TCP sliding-window sizes estimated by *Iperf*, and *Wget*, as a a standard FTP client, reports throughput values using the default TCP implementation provided by operating systems.

We expected that the three applications would yield very different throughput values due to their operational distinctions. *LANFielder* works similar to the real-time applications/protocols such as Voice of IP (VoIP), which *wget* represents typical web browsing or file downloading activities. *Iperf*

should report the highest throughput among the three tools because it tries to benchmark the maximum available bandwidth. FTP protocol also utilizes the TCP sliding-window mechanism to send successive packets, and is primarily one-way transmission. Hence, throughput that FTP reports should be higher than that of *LANFielder* as *LANFielder* does not pipeline transmissions.

LANFielder supports three transport protocols: TCP, TCP Flood, and UDP, and has a wide range of acknowledgment options, which is useful for emulating a vast array of possible applications, such as real-time video or audio. Because both *Iperf* and *wget* use TCP, we selected UDP and a two-way transmission of the original packets to diversify the choice of applications and to allow *LANFielder* to emulate a heart-beat or repeater application. Moreover, in this work, the packet size in *LANFielder* was set to be the maximum, 1472 bytes UDP payload data, in order to experience the widest range of measured throughput variations due to channel conditions (e.g., we used the longest transmission time) and lowest protocol overhead.

Iperf and *wget* were used in the default manner. To accelerate the FTP file transfer process, the FTP server shared two files with sizes 300 KB and 3 MB. The smaller file and the larger one were selected in low and high SNR conditions, respectively. The two file sizes were chosen empirically for the downloading process to finish in approximately ten seconds.

2.3.5 Traffic Measurement Procedure

Hotspot traffic was captured as follows:

- The CN-3000 AP and the sniffer laptop were connected to the common hub (see Fig. 2.1).
- *Tcpdump* was initiated on the sniffer laptop to record the first 68 bytes of each packet to and from the WLAN.
- At 1:00 a.m. every day during the week of measurement, the traffic trace file on the sniffer laptop computer was remotely inspected to ensure integrity.
- After finishing one week of continuous measurements, the sniffer laptop and the hub were removed from the restaurant.

2.3.6 Throughput Measurement Procedure

The throughput and SNR measurement procedure is as follows:

- The Compaq server was connected to the CN-3000 AP via a hub.
- Three non-conflicting software packages, *LANFielder*, *Iperf*, and FTP Server, were started on the server laptop one at a time.
- The client computer was booted with Aironet 350 or ORiNOCO cards.
- The corresponding client software, *LANFielder*, *Iperf*, and *wget*, were executed on the client laptop to measure WLAN throughput.
- SNR values were recorded by *LANFielder/netstumbler*.

2.3.7 Definitions

Before we present the measurement results, several definitions are necessary.

Inbound traffic: traffic sent from the Internet to the AP.

Outbound traffic: traffic sent to the Internet by the AP.

Busy hours: the period during which more than 90% of the daily traffic is generated. In this measurement campaign, the hours from 10:00 a.m. to 10:00 p.m. were calibrated as the busy hours.

Signal-to-noise ratio (SNR): The perceived SNR by WLAN *clients*.

2.4 Measured Hotspot Traffic Statistics

During this traffic measurement campaign, the Lamar restaurant offered the largest user base and traffic load. Hence, a one-week traffic trace from 10:00 a.m., June 30, 2003 to 10:00 a.m., July 7, 2003 at the Lamar restaurant is presented in this section to illustrate the traffic statistics of a popular WLAN. The trace captured 6,000,957 outbound and 7,223,654 inbound packets.

2.4.1 Traffic Time-series

Fig. 2.2 is a one-week time-series plot of the captured WLAN traffic at the Lamar restaurant.

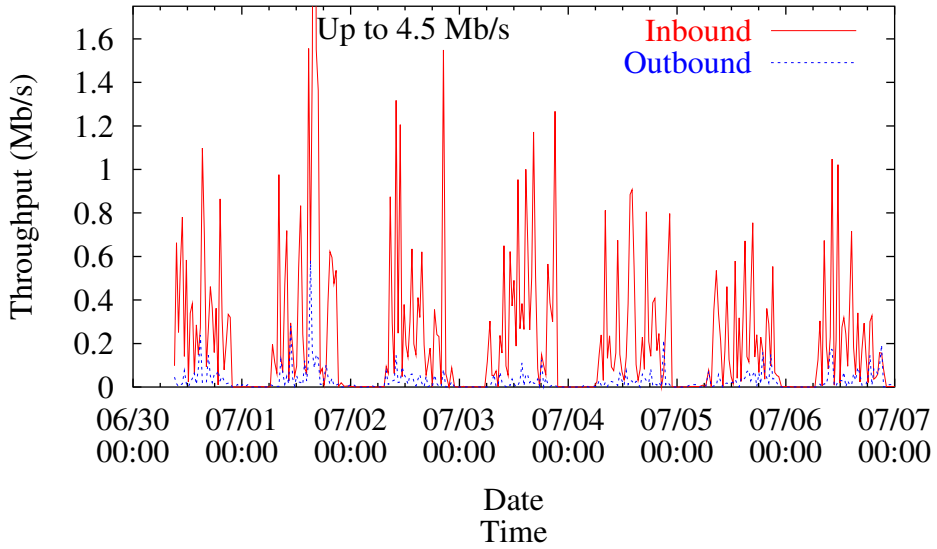

Figure 2.2: Weekly traffic (10:00 a.m., June 30, 2003 to 10:00 a.m., July 7, 2003) from the Lamar restaurant

As observed from this figure, the traffic load followed the store business hours closely, which are 7:00 a.m. - 10:00 p.m. Monday through Thursday, 7:00 a.m. - 11:00 p.m. Friday, 8:00 a.m. - 11:00 p.m. Saturday, and 8:00 a.m. - 10:00 p.m. Sunday. Traffic load increased rapidly when the restaurant opened and dropped dramatically when the store closed. Throughput spikes shown in Fig. 2.2 represent periods of high throughput demand. The continuous traffic load during business hours suggests that this WLAN service did attract customers to visit the restaurant.

An hourly time-series plot is shown in Fig. 2.3. Because there was little overnight traffic, as presented in Fig. 2.2, this plot only presents traffic during the busy hours. Fig. 2.3 shows that the distribution of hourly network

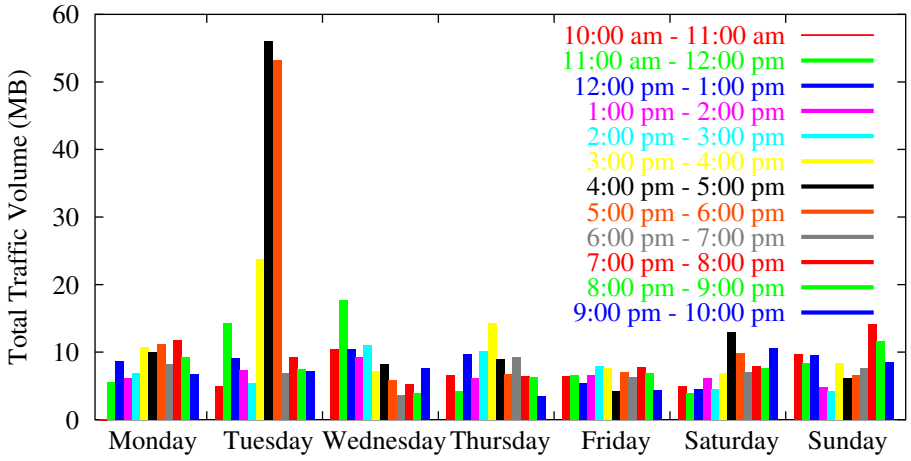

Figure 2.3: Hourly traffic volume at Schlotzsky's Lamar store (10:00 a.m., June 30, 2003 to 10:00 a.m., July 7, 2003)

usage varied from day to day. For example, the hourly traffic peaked between 11:00 a.m. and 12:00 p.m. on Wednesday but between 4:00 p.m. and 5:00 p.m. on Friday. The reason for this phenomenon is that this hotspot serves a limited number of users, as most hotspots do, and therefore one individual's usage behavior could have considerable impact on the total traffic load. This explanation, in turn, implies that the total traffic load might not be necessarily proportional to the number of WLAN users presented.

Probably the most intriguing observation in Fig. 2.3 is the considerably large amount of traffic generated between 3:00 p.m. and 5:00 p.m. on Tuesday afternoon. Closer study shows that this spike was mainly caused by one point-to-point (P2P) application and further strengthened by an aggressive downloading program. This issue will further be addressed in Section 2.4.4. It is worthwhile, however, to point out that the fluctuations of hourly throughput

during busy hours were relatively small, except for this anomalous period on Tuesday afternoon.

2.4.2 Packet Size Distribution

The ratio of outbound traffic volume to inbound traffic volume was roughly 1:5, as shown in Table 2.2.

Table 2.2: Total traffic volume from 10:00 a.m., June 30, 2003 to 10:00 a.m., July 7, 2003 in the Lamar restaurant

	Byte (GB)	(%)	Packets	(%)
Total	6.3	100	13,224,611	100
Outbound	1.0	16	6,000,957	45.4
Inbound	5.3	85	7,223,654	54.6

Actually, the ratio was 1:6 during busy hours. Because the ratio of outbound to inbound packets was almost 1:1, as observed from Table 2.2, outbound packets should be small compared to inbound packets *on average*. This observation is demonstrated in Fig. 2.4 and Fig. 2.5, which show the *cumulative distribution function* (CDF) of packet sizes and traffic volume.

One intuitive explanation is that very likely, most outbound packets were "request" packets, which are generally smaller than inbound "respond" packets. Therefore, most users in this hotspot were "conventional" Internet users, who generate smaller request packets and wait for larger response packets. Such characteristics are typical for web browsing, news groups reading,

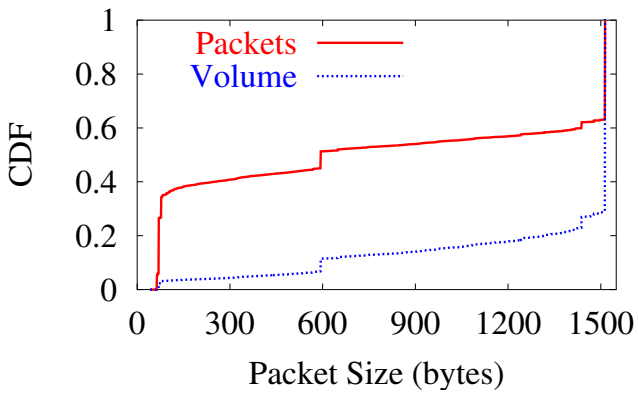

Figure 2.4: Packet size and traffic volume distributions at Schlotzsky's Lamar restaurant: Inbound direction

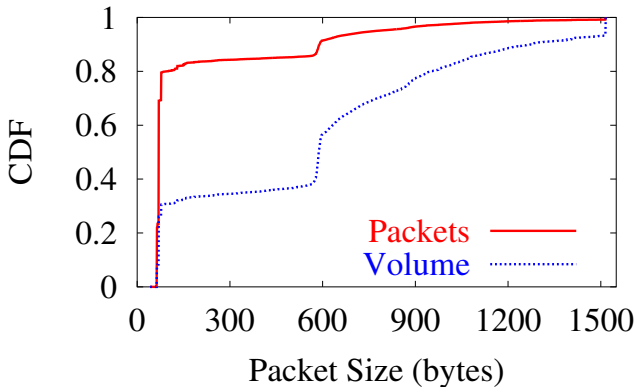

Figure 2.5: Packet size and traffic volume distributions at Schlotzsky's Lamar restaurant: Outbound direction

and email services.

Observe Fig. 2.4 and Fig. 2.5, small packets (smaller than 100 bytes), and large packets (larger than 1470 bytes) dominate traffic over the measured WLAN. Eighty percent of outbound packets were smaller than 100 bytes, and inbound packets were for the most part smaller than 100 bytes or larger than 1470 bytes.

The measured inbound and outbound packet size distributions, as shown in Fig. 2.4 and Fig. 2.5, suggest several possible optimization procedures. For example, APs installed in WLAN areas should be optimized to send small packets and large packets on downlink. This procedure is obvious because these two groups account for approximately 40% each of the total number of downlink packets. On the other hand, APs should be optimized for receiving small packets because 80% of uplink packets are smaller than 100 bytes, according to Fig. 2.5. Similarly, because most packets originating from WLAN clients are small, WLAN client devices should be optimized to send small packets. On the other hand, WLAN access points can benifit from balanced design because small packets and large packets each accounts for 40% of traffic.

2.4.3 Typical Applications Used by Hotspot Users

Table 2.3 presents the distribution of TCP/UDP traffic load by users of the WLAN in the Lamar resaturant.

The small amount of measured UDP traffic almost completely eliminated the likelihood of the presence of real-time video/audio applications.

Table 2.3: IP traffic distributions from 10:00 a.m., June 30, 2003 to 10:00 a.m., July 7, 2003 in the Lamar restaurant

	Data	TCP	UDP	ICMP	Other
Total	6.3 GB	6.1 GB	156.6 MB	1.6 MB	561.2 KB
Outbound	1.0 GB	1.0 GB	17.8 MB	732.5 KB	241.2 KB
Inbound	5.3 GB	5.1 GB	138.8 MB	901.3 KB	320.0 KB

Therefore, communication delay was not critical at the time of this measurement. However, with the fast growth of real-time video/audio applications, especially voice over IP (VoIP), there might be requests from users such that hotspots need to be provisioned to satisfy certain delay requirements.

Fig. 2.6 details the traffic load generated by several well-known applications/protocols. Each application/protocol is identified by TCP/UDP port mapping. Clearly, HTTP dominated this hotspot network usage. Network News Transport Protocol (NNTP) also shared a small portion of observed traffic load. It is important to point out that this usage pattern closely depends on the presence of certain user groups. For example, no NNTP traffic was observed from the Northcross traffic trace. However, the Northcross trace did confirm the predominant position of HTTP protocol.

In Fig. 2.6, one GB of traffic, about one sixth of the total data traffic, is labeled as "unidentified" that could not be recognized as any commonly seen application/protocol. To identify this portion of traffic, longer packet headers must be captured, and more application-level protocols have to be addressed.

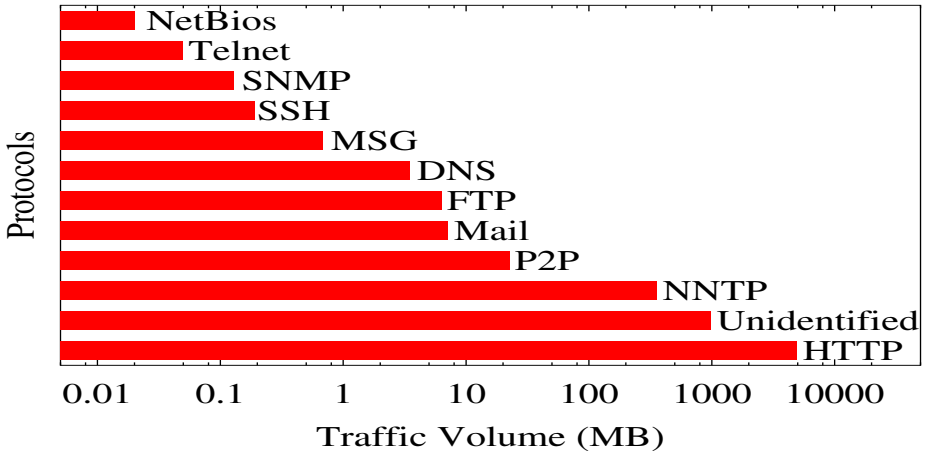

Figure 2.6: Traffic distributions by major applications from 10:00 a.m., June 30, 2003 to 10:00 a.m., July 7, 2003 in the Lamar Restaurant (The unidentified category includes all the protocols that could not be identified by the port mapping procedure with knowledge of commonly seen ports)

However, it is very likely that this portion of traffic was generated by programs that dynamically establish connections via arbitrary ports, as exemplified by P2P applications.

2.4.4 Changes of Network Usage Patterns

After we carefully studied the abnormal period on Tuesday afternoon during when a large amount of traffic load was generated, it shows that one P2P application and one NNTP downloading activity were consuming most of the bandwidth during that period. This result proves that P2P applications and other applications with high upload and download traffic, e.g., FTP, could dominate network resources by excess occupation of bandwidth and affected WLAN performance. Thus, even a small number of such applications, e.g.,

one or two, may overwhelm the hotspot over a period of time. Therefore, it is important to have an autonomous control mechanism that adapts to WLAN dynamics and allocates resources fairly.

Interestingly enough, among the top sites with high inbound or outbound traffic volume, a non-trivial portion of them were not registered for commercial use. Our traffic trace data show that the emerging mechanisms that dynamically support direct communications between any two computers on the Internet, e.g., P2P protocols, played important roles in generating traffic among these computers. Besides this portion of unregistered sites, web-based email, on-line auction, on-line gaming, and NNTP news reading sites were among the mostly visited Internet places by users from this hotspot.

We believe it is important to realize that the Internet is gradually changing. First, more applications are moving away from the traditional client/server architecture, in which a small amount of centralized servers serve a large amount of clients. Nowadays, service models are more distributed. Any computer connected to the Internet could easily provide services, e.g., file sharing, to the others. Second, more real-time applications will appear, which request lower delay and/or higher throughput. WLANs, as convenient extensions of the Internet, inevitably will experience both changes. Therefore, WLAN traffic statistics will definitely change accordingly. Further, distinct from wired networks, in which the communication media are relatively reliable and almost static, WLAN operates on less reliable RF channels that are inherently shared and time varying [50, 34]. Hence, WLAN traffic statistics

would further be affected by the RF transmission characteristics. This influence needs to be addressed as well. So, WLAN traffic statistics will continue being an interesting topic to study.

2.5 Achievable Throughput Measurements

This section focuses on the relationship between application-level throughput and signal-to-noise ratio (SNR) in IEEE 802.11b based WLANs. A WLAN user experiences different levels of SNR and throughput as he or she moves from place to place.

2.5.1 Empirical IEEE 802.11b Throughput Models

The empirical model in [52] can predict SNR at a WLAN receiver based on site-specific information, such as building layouts, obstacles, and antenna characteristics. Similar models have been widely used in the cellular industry for propagation predictions. However, in order to predict throughput, a model to map SNR to throughput is needed.

In [27], Henty used a single software tool LANFielder to obtain SNR and throughput. He was the first to establish an SNR-throughput mapping model. A general trend of the measured data is that throughput increases as SNR increases. The measured data also shows that throughput reaches some saturation level when SNR goes beyond a critical threshold. Henty proposed two reasonable models, exponential and piecewise models, to fit the measured

data. Two such models, exponential and piecewise models, were proposed in [27].

The *piecewise model* is:

$$T = \begin{cases} T_{max} & , SNR > SNR_c \\ A_p \times (SNR - SNR_0) & , SNR \leq SNR_c \end{cases} \tag{2.1}$$

The two lines of (2.1) intersect at SNR_c, which can be obtained using (2.2).

$$SNR_c = \frac{T_{max}}{A_p} + SNR_0 \tag{2.2}$$

The *exponential model* could be expressed as:

$$T = T_{max}\left(1 - e^{-A_e \times (SNR - SNR_0)}\right) \tag{2.3}$$

T is throughput. T_{max}, SNR_0, SNR_c, and A_p/A_e are constants that are vendor and application specific. T_{max} is the throughput saturation level which results from the SNR going beyond the critical threshold SNR_c. SNR_0 is the SNR where throughput is zero. In the piecewise model of (2.1), A_p is the slope of the line when $SNR \leq SNR_c$. In the exponential model of (2.3), A_e describes the rate at which the throughput reaches saturation. In ideal, i.e., high SNR, circumstances, T_{max} is the throughput that the WLAN system will provide. In circumstances in which SNR is low, SNR_c, SNR_0, and A_p/A_e are used to predict throughput. Models (2.1) and (2.3) both have three constants[2], which can be determined by applying minimum mean square error (MMSE) curve-fitting algorithm on measured data, as introduced in the following subsection.

[2]There are four constants in the piecewise model, but one of them is linearly dependent on the other three.

2.5.2 Curve-fitting Algorithm

This subsection describes the algorithm used in this chapter to fit (2.1) and (2.3) to 792 measurements. First, the algorithm is performed over the 264 measurements from each of the three restaurants. Second, all 792 measurements are fed into the curve-fitting algorithm. The algorithm takes inputs from an array of SNR and throughput measurements, and outputs three parameters, T_{max}, SNR_c, and SNR_0 for the piecewise model of (2.1), and T_{max}, A_e, and SNR_0 for the exponential model of (2.3). The steps to calculate the three parameters are different in each case, as explained below.

Piecewise

A wireless link with strong SNR should be highly reliable. The measured data show that the throughput values measured at strong SNR are high with little fluctuation. Thus, we averaged the strongest 15% of all measurements[3] to determine the saturation level T_{max}. Over the lower 85% of the measured data, we ran a MATLAB function *polyfit*. This function uses a line to fit data using MMSE and reports the slope A_p and the x-intercept SNR_0. Finally, SNR_c can be obtained using (2.2).

[3] Fifteen percent was chosen so that a statistically obvious decline of throughput exists between the higher 15% and the lower 85% of data, as quantified by the *variation coefficient*. Variation coefficient, ranging from 0 to 1, is a widely-used statistical figure to gauge the fluctuation degree of a data set, and is defined as $S_x/\overline{x}$, where S_x is the standard deviation of a set of throughput, and $\overline{x}$ its mean. An upper bracket of more than 15% produces a variation coefficient rapidly exceeding 0.1, and thus indicates a throughput drop.

Exponential

The MATLAB function *nlinfit* estimates the coefficients of a nonlinear function using MMSE; therefore it is suitable for fitting the exponential model. We ran *nlinfit* to determine the three parameters T_{max}, A_e, and SNR_0. Occasionally, *nlinfit* makes SNR_0 a large negative number (e.g. $-10 \sim -15$). Such a negative value violates the intuition that throughput is small when SNR is below zero. In the case that *nlinfit* generates $SNR_0 \leq -5$ (The number '-5' was chosen by trial and error), the parameter SNR_0 should be set as the value obtained from the piecewise model. Then, T_{max} and A_e are determined by *nlinfit* based on the fixed SNR_0.

2.5.3 Measurement Results and Fit Curves

The work in this section builds upon early results from [27] and includes studies that are much more extensive in nature. The throughput-measurement software programs, *Iperf*, *wget*, and *LANFielder*, constitute a diverse collection of applications, serving as measurement tools and application types to explore user traffic characteristics, thus providing a better understanding of network performance. Though models proposed in [27] were only based on data from *LANFielder*, we found it to be extendable to *Iperf* and FTP. This extension is a major contribution of this section.

Fig. 2.7 and 2.8 show the measured data from the Guadalupe, Parmer, and Northcross restaurants with piecewise and exponential curve-fitting, where

Cisco and ORiNOCO cards are used respectively in the two figures. In each figure, part (d) puts together the measurement data of all three restaurants.

Table 2.6 and Table 2.7 show the statistics of the two models shown in (2.1) and (2.3), whereas Table 2.4 and Table 2.5 show their parameters. Both models were evaluated by mean error μ, standard deviation σ, and correlation coefficient R. Both models produce curves with correlation coefficients over 80% in two restaurants and over 70% in the other, which indicates the high integrity of the curve-fitting algorithm.

As can be seen from Fig. 2.7 and Fig. 2.8, the spatially-averaged data have stronger correlations than the un-averaged data. That is because spatial averaging is essentially a low-pass filter and eliminates deviated data points. Therefore, This technique may be used to estimate throughput before deployment.

2.5.4 A Summary of Measured Data Trends

The data analysis fits (2.1) and (2.3) to model the measured data, as well as the error between measurements and the model. Below are several measurement-based observations that summarize throughput studies for IEEE 802.11b systems.

Saturation Level T_{max} of (2.1) and (2.3)

In most cases, the Cisco card has a higher saturation level T_{max} than the ORiNOCO card. This hardware-specific characteristic may be caused by the

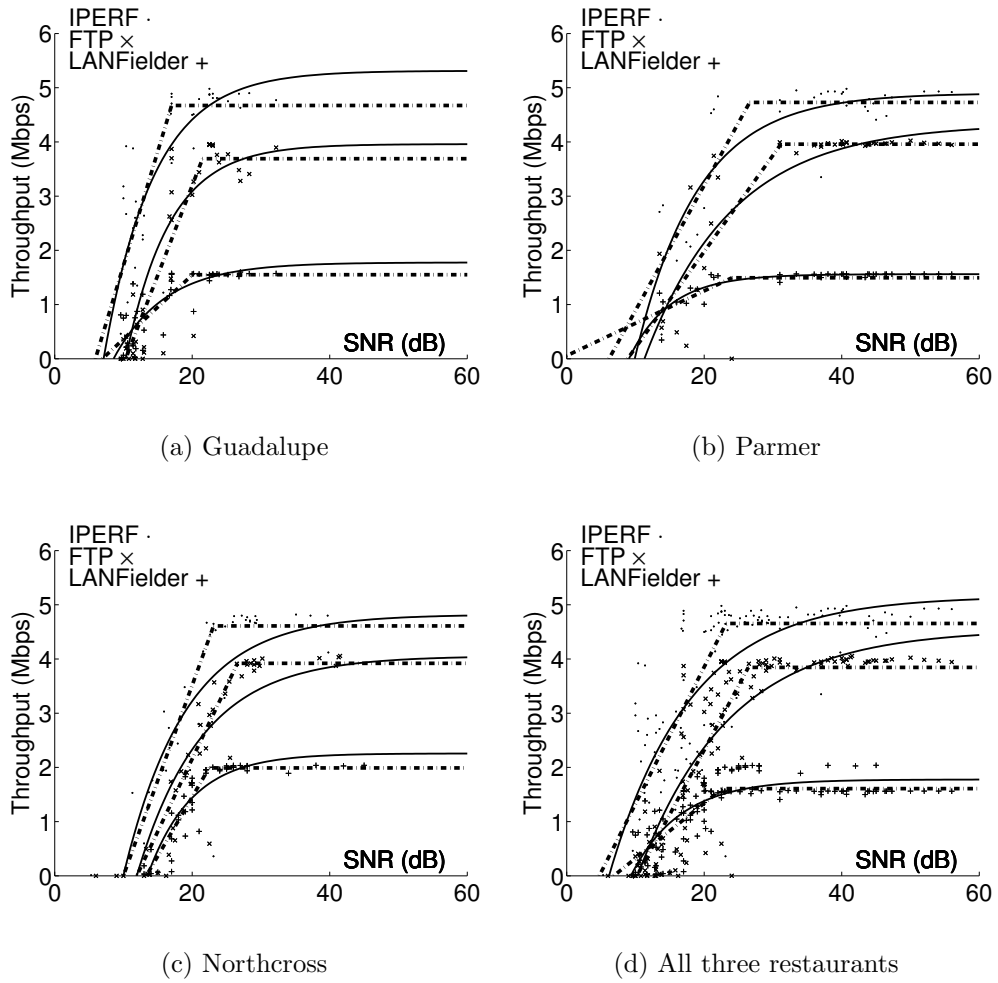

(a) Guadalupe

(b) Parmer

(c) Northcross

(d) All three restaurants

Figure 2.7: Measurement results at Schlotzsky's restaurants using Cisco card (dotted line: piecewise model; solid line: exponential model)

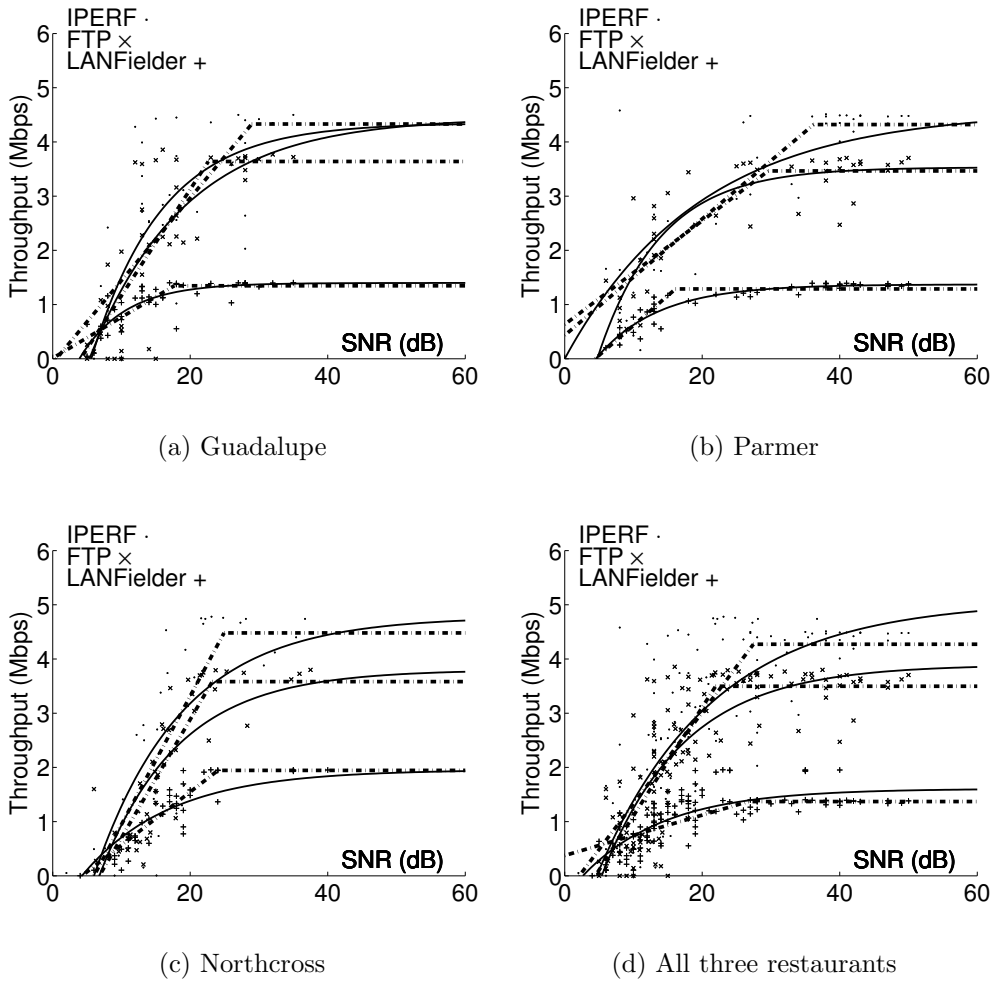

(a) Guadalupe

(b) Parmer

(c) Northcross

(d) All three restaurants

Figure 2.8: Measurement results at Schlotzsky's restaurants using ORiNOCO card (dotted line: piecewise model; solid line: exponential model)

Table 2.4: Parameters of the piecewise models. ('C' and 'O' stand for Cisco and ORiNOCO cards, respectively. 'Gua', 'Par', 'Nor', and 'All' stand for the Guadalupe, Parmer, Northcross, and all three restaurants, respectively.)

		T_{max} (Mbps)		SNR_c (dB)		SNR_0 (dB)	
		C	O	C	O	C	O
Iperf	Gua	4.67	4.33	17.0	29.0	5.92	0.523
	Par	4.73	4.32	26.6	36.2	6.16	-4.02
	Nor	4.61	4.48	23.1	24.9	9.99	6.00
	All	4.66	4.27	23.2	27.4	4.75	2.13
FTP	Gua	3.69	3.64	21.5	22.6	10.3	4.06
	Par	3.96	3.46	31.2	29.6	8.86	-6.61
	Nor	3.92	3.58	26.6	23.2	12.0	6.79
	All	3.84	3.50	26.4	21.9	10.2	4.46
LANFielder	Gua	1.55	1.35	20.0	17.7	6.93	-0.13
	Par	1.49	1.29	24.0	16.1	-0.9	4.43
	Nor	1.99	1.94	22.5	24.0	13.3	4.25
	All	1.61	1.37	22.6	26.7	6.84	-10.1

different designs of the two cards. However, the ORiNOCO card did perform well in environments with low SNR. One can not conclude Cisco cards outperform ORiNOCO cards based on T_{max} value alone.

T_{max} is also application-specific because each application uses different protocols (such as FTP, TCP, and UDP). However, T_{max} may not be site-specific because Table 2.4 shows similar T_{max} values at several distinct measuring sites. This observation partially proves that SNR is an important factor to characterize channel conditions for IEEE 802.11b WLAN systems, regardless of location.

Table 2.5: Parameters of the exponential models. ('C' and 'O' stand for Cisco and ORiNOCO cards, respectively. 'Gua', 'Par', 'Nor', and 'All' stand for the Guadalupe, Parmer, Northcross, and all three restaurants, respectively.)

		T_{max} (Mbps)		SNR_c (dB)		SNR_0 (dB)	
		C	O	C	O	C	O
Iperf	Gua	5.31	4.35	0.138	0.0975	7.11	5.61
	Par	4.90	4.58	0.110	0.0509	9.90	0
	Nor	4.82	4.78	0.110	0.0782	9.99	6.00
	All	5.16	5.07	0.084	0.0596	6.15	4.64
FTP	Gua	3.96	4.45	0.156	0.0722	10.3	5.34
	Par	4.33	3.53	0.078	0.110	11.3	4.73
	Nor	4.06	3.80	0.106	0.0879	11.9	6.79
	All	4.55	3.89	0.076	0.0833	10.3	5.37
LANFielder	Gua	1.78	1.40	0.133	0.151	8.56	3.88
	Par	1.56	1.37	0.169	0.111	9.04	4.53
	Nor	2.26	1.96	0.156	0.0781	13.5	4.25
	All	1.78	1.61	0.140	0.0835	9.33	2.64

Critical Threshold SNR_c of (2.2)

SNR_c is only used in the piecewise model. Throughput reaches the maximum T_{max} when SNR is above SNR_c. Table 2.4 shows that this parameter is on the order of 20 dB. Based on empirical observations, an SNR of 20 dB can be easily achieved within 10 m of the AP. Therefore, users inside a Schlotzsky's restaurant can usually enjoy high transmission rates.

Cutoff Parameter SNR_0 of (2.1) and (2.3), and Slope A_p of (2.1)

SNR_0 ranges between -6 and 13 dB, and A_p ranges from 0.06 to 0.42. These two parameters together describe the behavior when SNR is less than SNR_c.

Table 2.6: Statistics of the piecewise models. ('C' and 'O' stand for Cisco and ORiNOCO cards, respectively. 'Gua', 'Par', 'Nor', and 'All' stand for the Guadalupe, Parmer, Northcross, and all three restaurants, respectively.)

		μ (Mbps)		σ (Mbps)		R (%)	
		C	O	C	O	C	O
Iperf	Gua	-0.074	0.007	0.859	1.14	81.0	71.9
	Par	0	0.006	0.621	0.747	85.4	86.2
	Nor	-0.247	0.003	0.967	0.939	82.7	82.7
	All	-0.085	0.001	0.99	0.981	76.0	79.0
FTP	Gua	-0.030	-0.005	0.730	0.876	90.1	79.4
	Par	-0.015	0.017	0.698	0.565	85.1	84.6
	Nor	-0.099	0	0.609	0.625	92.0	86.7
	All	0.009	-0.026	0.748	0.718	88.6	82.6
LANFielder	Gua	-0.003	-0.006	0.321	0.254	83.5	78.6
	Par	0.050	-0.011	0.138	0.149	84.8	91.5
	Nor	-0.002	-0.017	0.267	0.268	92.3	90.6
	All	0.051	0.046	0.336	0.321	82.8	77.7

2.5.5 To Model Other Applications

We observed that the T_{max} ratio of *Iperf*, FTP, and *LANFielder* is about 2.9 : 2.4 : 1 when all Cisco-card data are applied to the piecewise model of (2.1). The ratio is similar in other scenarios (e.g., ORiNOCO-card data, the exponential model of (2.3), etc.). This indicates that there may exist a rule to relate throughput of different applications. To estimate the throughput of a new application, one can measure its T_{max} in an ideal benchtest and find the T_{max} ratio with respect to *Iperf*, FTP, and *LANFielder*. Then, the piecewise and exponential models for this new application can be derived by performing

Table 2.7: Statistics of the exponetial models. ('C' and 'O' stand for Cisco and ORiNOCO cards, respectively. 'Gua', 'Par', 'Nor', and 'All' stand for the Guadalupe, Parmer, Northcross, and all three restaurants, respectively.)

		μ (Mbps)		σ (Mbps)		R (%)	
		C	O	C	O	C	O
Iperf	Gua	0	0	0.847	1.06	81.5	76.3
	Par	0	-0.045	0.633	0.817	84.8	85.0
	Nor	0.02	-0.015	1.05	1.08	78.8	76.7
	All	0	0	0.998	0.984	75.4	78.9
FTP	Gua	-0.1	0	0.795	0.870	88.2	79.8
	Par	0	0	0.720	0.521	84.0	87.0
	Nor	0.06	0.041	0.891	0.742	82.9	81.3
	All	0	0	0.793	0.747	87.1	81.0
LANFielder	Gua	0	0	0.325	0.247	83.0	79.9
	Par	0	0	0.141	0.124	84.0	94.2
	Nor	0	0.029	0.306	0.352	89.7	83.0
	All	0	0	0.364	0.295	78.9	79.2

extrapolations or interpolations on the known results of the three software tools. The obtained equations can serve as approximate throughput models of the new application, and could be further verified by measurements.

2.6 Conclusion

In this chapter, measured WLAN traffic statistics and IEEE 802.11b throughput prediction models are reported. The measurement campaign was conducted on an operational IEEE 802.11b WLAN supported by Schlotzsky's

Inc., in Austin, Texas in the summer of 2003. Out measurements showed that:

1. The measured WLAN traffic was highly asymmetric with high inbound traffic, with a ratio of about 1 to 5.

2. On the network usage side, although file downloading and P2P applications sometimes generated high network demands, the majority of WLAN users used HTTP protocol. However, real-time autonomous control of networks is necessary with growing usage of P2P applications.

3. Inbound packets and outbound packets sizes distributed very differently, which is a result of the dominating usage of HTTP protocol.

4. Measurement data also showed that throughputs of IEEE 802.11b networks are well modeled by SNR. Two empirical models given by (2.1) and (2.3) were derived from extensive field measurement data, and are presented here as well. Both models are easy to formulate and provide accurate throughput predictions.

We believe that the four measured WLANs presented here are representative of modern hotspots, and that the traffic statistics and throughput prediction models presented here could be applied to similar environments and further extended for future WLANs. The throughput prediction models showed that a key to future WLAN deployment may be to use accurate site-specific propagation algorithms for design

Chapter 3

WLAN Traffic Statistics: Sub-second Time Scale Behavior

3.1 Introduction

The terminology "network traffic" has different meanings in different contexts. For example, at the network layer and higher layers, traffic is often synonymous with throughput; at the link layer, traffic is typically mapped to link layer packet flows. In spite of these various definitions, network traffic can be represented by a random process which depends upon the end users, applications, protocols, and channels and generally presents an extremely complex statistical structure.

Since the landmark paper [40] detailing the statistical characteristics of Ethernet traffic, self-similarity (SS) and long-range dependency (LRD) have

been widely accepted in the literature to describe traffic statistical properties over large time scales (above 1 second). SS/LRD shows that network traffic is correlated over extended time of periods ranging up to several hours.

Despite the seemingly ubiquitous existence of SS/LRD observed in LAN [40], WLAN [49], and WWW [15] traffic, a complete framework that is capable of systematically estimating, verifying and demonstrating the significance of SS/LRD from measured traffic traces has not been established [1], mostly due to the lack of physical modeling [15, 64]. The lack of such a framework [1] results in much debate about estimation and detection of LRD [35], and about queueing performance with SS/LRD traffic [19, 26]. Nonetheless, the concerned time scale of network traffic is well-established from measurements [40], which ranges from several seconds up to several hours.

It has been shown that network traffic exhibits more complex statistical structure at small time scales (generally are observation intervals of less than 1 second, sometimes called sub-second time scales). Feldmann et al. [20, 22] first reported the small scale effects and suggested that network traffic might possess a multifractal correlation structure at this small scale range from WAN traffic traces. The multifractal structure was subsequently confirmed in [51]. The significance of this structure to network performance was investigated in [18]. More recent work, however, argues that as traffic load increases, network traffic is fairly uncorrelated or even Poisson-like at small scales [12, 67, 36]. Nonetheless, it is clear that the small scale correlation structure of network traffic is vastly different from that at large scales.

Empirical studies [21] show that the transition from large scale to small scale scaling in network traffic happens around the round trip time (RTT) of TCP protocol. Because TCP can account for more than 90% of network traffic load, as shown in Fig. 4 of [46], the characteristics of TCP are very likely to dominates the factors affecting traffic structures. It is well known that TCP is a close-loop protocol in which acknowledge packets are exchanged. Figueiredo et al. [23] shows that TCP does not change traffic correlation structure below one RTT period simply because the feedback delay is at least one RTT, and therefore TCP sessions do not react to network changes below this time scale. Recent traffic measurements [54] show that current TCP RTT on the Internet is around the sub-second area. Therefore, it is reasonable to assume that network traffic may be modeled using "small scale" scaling over the sub-second observation interval.

In the process of modeling and analyzing network traffic, various mathematical tools have been developed. During the past several year, however, wavelet based multi-resolution analysis (MRA) has become one of the most popular and reliable tools in detecting and analyzing scaling effects at both large and small time scales because wavelets are capable of "zooming" in on both the time and frequency domain and revealing interesting characteristics in the data. Abry and Veitch [3, 59] first used the *wavelet spectrum* to detect SS/LRD in large scales. Recently, Zhang [67] and Jiang [33] proposed using wavelet spectrum to measure burstiness of network traffic at small scales. Another compelling feature of wavelets is that the wavelet spectrum shares a

natural tie with power spectral density (PSD). In fact, the wavelet spectrum could be used to estimate PSD [2], which also happens to be one of the central elements in areas such as channel modeling. Therefore, because of the rich literature of wavelets in network traffic research, and because of the direct physical meaning associated between wavelet spectrum and PSD, we adopt wavelet spectrum as the analyzing tool in this research.

[20], is decided by the well-known self-similar scaling law. The goal of this chapter is to verify the WLAN traffic large scale properties, and more importantly, to identify sub-second scale characteristics of WLAN traffic. The chapter is organized as follows. Section 3.2 introduces background of mathematical tools, especially wavelet analysis, and the relationship between wavelet-based spectrum analysis and classic power spectrum density. Section 3.3 describes the measurement setup. Section 3.4 presents wavelet-based IEEE 802.11b traffic analysis results in small time scales.

3.2 Spectrum Analysis and Wavelets

This section describes spectrum analysis and wavelet transforms, and their applications in traffic and channel characterizations.

3.2.1 Classic Spectrum Estimation

Autocorrelation in the time domain or power spectral density in the frequency domain, reveal second-order statistics of random processes, and play impor-

tant roles in analyzing and modeling physical phenomena, e.g., communication system analysis and radio signal processing. Therefore, efficient and accurate estimation of second-order statistics is extremely important in practice Classical estimation approaches of second-order statistics include:

1. Time domain estimation
2. Frequency domain estimation
3. Parametric model based estimation

The last approach, the parametric estimation approach, generally assumes system models *in prior* and estimates model coefficients using system identification techniques. For our network traffic and wireless channel applications, however, it is desirable to fully understand traffic and channel properties both in time and frequency domains. Therefore, the first two approaches are chosen in this research. In the following discussion, we also assume that the random processes (time series) involved are wide-sense stationary (WSS) processes.

Time Domain Estimation

Blackman and Tukey [11] proposed time domain spectrum estimation. This classical approach estimates power spectrum and cross-spectrum via the Fourier transformation of autocorrelation and cross-correlation functions, respectively. Although several variations of the method have been proposed, the basic idea, especially in regards to the bias and convergence of estimations, remains the same.

Let $\hat{C}_x(\tau)$ and $\hat{C}_{xy}(\tau)$, $\tau \in \{-T, -T+1, \ldots, 0, \ldots, T-1, T\}$, be the estimated second-order auto and cross moments of a discrete time series $x(t)$ and $y(t)$. By the definition of power spectrum density, the estimated spectra of the time series of interest are:

$$\hat{S}_x(\omega) = \sum_{\tau=-T}^{T} \hat{C}_x(\tau)\ e^{j\omega\tau} \tag{3.1}$$

$$\hat{S}_{xy}(\omega) = \sum_{\tau=-T}^{T} \hat{C}_{xy}(\tau)\ e^{j\omega\tau} \tag{3.2}$$

where $\hat{S}_x$ and $\hat{S}_{xy}$ are the estimated power spectrum and cross power spectrum of the time series.

Now assume that the true autocorrelation and cross-correlation of the time series are $C_x(\tau)$ and $C_{xy}(\tau)$. Given a windowing function $w(\tau)$:

$$w(\tau) = \begin{cases} 1, -T \leq \tau \leq T \\ 0, \text{otherwise} \end{cases} \tag{3.3}$$

The estimated spectra can be rewritten as:

$$\hat{S}_x(\omega) = \sum_{\tau=-\infty}^{\infty} w(\tau) C_x(\tau)\ e^{j\omega\tau} \tag{3.4}$$

$$\hat{S}_{xy}(\omega) = \sum_{\tau=-\infty}^{\infty} w(\tau) C_{xy}(\tau)\ e^{j\omega\tau} \tag{3.5}$$

Clearly in the frequency domain, the estimated power spectrum is given by multiply the actual power spectrum by the transfer function of the windowing

function:

$$\hat{S}_x(\omega) = W(\omega) * S_x(\omega) \tag{3.6}$$

$$\hat{S}_{xy}(\omega) = W(\omega) * S_{xy}(\omega) \tag{3.7}$$

where $S_x(\omega)$ and $S_{xy}(\omega)$ are the true power spectrum and cross power spectrum of the time sequences, and $W(\omega)$ is the Fourier transform of the windowing function $w(\tau)$. This expression reveals the bias due to the convolution operation of the estimated spectrum.

In practice, there are only limit number of samples in the discrete time series. Therefore, only a limited number of samples can be used to estimate the correlation. Let M denote the number of different sequences used to estimate $\hat{C}_x$ and $\hat{C}_{xy}$. Clearly, the length of the correlation period T depends on the value of M as well. Naidu [47] shows that the quality of the time domain spectrum estimators, i.e., the mean and the variance of the estimators, is determined by M and T:

$$\mathbf{E}[\hat{S}_x(\omega)] = \sum_{k=0}^{M-1} W(\frac{2\pi k}{M}) S_x(\omega - \frac{2\pi k}{M}) \tag{3.8}$$

$$\mathbf{E}[\hat{S}_{xy}(\omega)] = \sum_{k=0}^{M-1} W(\frac{2\pi k}{M}) S_{xy}(\omega - \frac{2\pi k}{M}) \tag{3.9}$$

and the variances:

$$\mathbf{V}ar[\hat{S}_x(\omega)] = \sum_{k=0}^{M-1} W^2(\frac{2\pi k}{M}) S_x^2(\omega - \frac{2\pi k}{M}) \tag{3.10}$$

$$\mathbf{V}ar[\hat{S}_{xy}(\omega)] = \sum_{k=0}^{M-1} W^2(\frac{2\pi k}{M}) S_{xy}^2(\omega - \frac{2\pi k}{M}) \tag{3.11}$$

In the ideal case, the estimation is unbiased if the windowing function has infinite length. If both the true spectrum of the time series and the spectrum of the windowing function are smooth, however, the spectrum estimation can still be high quality. For example, let us assume $S_x(\omega)$ and $S_{xy}(\omega)$ are two flat functions, and let us further suppose $W(\frac{2\pi k}{M}) = \frac{1}{M}, k \in \{0, \ldots, M-1\}$. Given limited number of samples, the variances are [47]:

$$\mathbf{V}ar\hat{S}_x(\omega) = \frac{T}{M} S_x^2(\omega) \tag{3.12}$$

$$\mathbf{V}ar\hat{S}_{xy}(\omega) = \frac{T}{M} S_{xy}^2(\omega) \tag{3.13}$$

Clearly, the variances are inversely proportional to the value of M, the number of sequences to calculate the ensemble averages, and proportional to the length of the windowing function. Hence, there is always a trade-off in choosing M and T in practice to use the time domain spectrum estimation efficiently.

Frequency Domain Estimation

Welch [62] contributed a framework of frequency domain estimation, and subsequently, frequency domain estimation methods became very popular because of the discovery of fast Fourier transform (FFT). In the frequency domain, the power spectrum and cross spectrum are estimated by [62]:

$$\hat{S}_x(k) = \lim_{T\to\infty} \frac{1}{T} \mathbf{E}[\hat{X}(k)\hat{X}^*(k)] \tag{3.14}$$

$$\hat{S}_{xy}(k) = \lim_{T\to\infty} \frac{1}{T} \mathbf{E}[\hat{X}(k)\hat{Y}^*(k)] \tag{3.15}$$

where $\hat{X}(k)$ represents the Fourier transform of the time series $x(t)$. Similar to windowing operation in the time domain approach, The mean and variance

of the estimated power spectrum can be represented by [47]

$$\mathbf{E}[\hat{S}_x(\frac{2\pi k}{T})] = \frac{1}{2\pi}\int_{-\pi}^{\pi} S_x(\frac{2\pi k}{N} - \omega)\frac{W^2(\omega)}{N}\ d\omega \tag{3.16}$$

$$\mathbf{E}[\hat{S}_{xy}(\frac{2\pi k}{T})] = \frac{1}{2\pi}\int_{-\pi}^{\pi} S_{xy}(\frac{2\pi k}{N} - \omega)\frac{W^2(\omega)}{N}\ d\omega \tag{3.17}$$

and for the variance:

$$\mathbf{V}ar[\hat{S}_x(\frac{2\pi k}{T})] \approx \frac{1}{2\pi}\int_{-\pi}^{\pi} \frac{S_x^2(\omega)}{M}\frac{W^4(\frac{2\pi k}{N} - \omega)}{N^2}\ d\omega \tag{3.18}$$

$$\mathbf{V}ar[\hat{S}_{xy}(\frac{2\pi k}{T})] \approx \frac{1}{2\pi}\int_{-\pi}^{\pi} \frac{S_{xy}^2(\omega)}{M}\frac{W^4(\frac{2\pi k}{N} - \omega)}{N^2}\ d\omega \tag{3.19}$$

Welch [62] showed that frequency domain estimations are capable of achieving similar results as the time domain approach. However, since the discovery of the Fast Fourier Transform, the frequency domain approach became more popular.

3.2.2 Wavelet Transforms and Wavelet Spectrum

In wavelet domain, the wavelet spectrum is the metric to analyze the correlation structure of time series [41]. Similar to the Fourier transform that decomposes signals into weighted sums of sinusoid basis functions, the wavelet transform dissects signals into combinations of "little waves", i.e., wavelets [16]. By dilating and shifting the wavelet, wavelet transforms can localize the analyzed signal both at time and frequency domains, which is often a much desired feature. Moreover, with properly selected wavelets, wavelet transforms are very effective in eliminating deterministic trend that often occurs

in network traffic traces [2]. Because of the desirable properties of wavelets, the wavelet transform and wavelet spectrum have become the most widely used tool in network traffic literature [1]. Therefore, it is advantageous to use wavelets analyzing WLAN traffic using in order to compare with previous traffic study results.

3.2.3 A Brief Introduction of Wavelets

Let a real-valued function $\psi(t) \in L^2(t)$, i.e., $||\psi||^2 = \int_{-\infty}^{+\infty} |\psi(t)|^2 \, dt < \infty$, be the analyzing wavelet that satisfies the admissibility condition

$$C_\psi = 2\pi \int_{-\infty}^{+\infty} \frac{|\Psi(\omega)|^2}{\omega} < \infty \tag{3.20}$$

where $\Psi(\omega)$ is the Fourier transform of $\psi(t)$. From the admissibility condition, it is obvious that $\int_{-\infty}^{+\infty} \psi(t) = 0$, and therefore, $\psi(t)$ oscillates, i.e., that $\psi(t)$ is a little wave, or wavelet. Consider the function family generated by dilating and shifting of the wavelet $\psi(t)$:

$$\psi_{a,b}(t) = |a|^{-1/2} \psi\left(\frac{t-b}{a}\right) \tag{3.21}$$

$\psi_{a,b}(t)$, $a, b \in \mathcal{R}$ are defined such that their energy is constant for all. Moreover, from properties of the Fourier transform,

$$\Psi(\omega) = \frac{a}{\sqrt{|a|}} e^{-j\omega b} \Psi(\omega) \tag{3.22}$$

The continuous wavelet transform for a finite energy signal $f(t) \in L^2(t)$ is now defined as:

$$W_{a,b} = \int_{-\infty}^{+\infty} f(t) \psi_{a,b} \, dt \tag{3.23}$$

and $f(t)$ may be reconstructed by:

$$f(t) = C_{\psi}^{-1} \int_{-\infty}^{+\infty} \int_{-\infty}^{+\infty} W_{a,b}\, \psi_{a,b}(t)\, da\, db \tag{3.24}$$

One intuitive way to relate the wavelet transform to the Fourier transform is to assume that the wavelet $\phi(t)$ and its Fourier transform $\Psi(\omega)$ have finite central moments $\bar{t}$ and $\bar{\omega}$,

$$\bar{t} = \frac{1}{||\psi||^2} \int_{-\infty}^{+\infty} t|\psi(t)|^2\, dt \tag{3.25}$$

$$\bar{\omega} = \frac{1}{||\Psi||^2} \int_{-\infty}^{+\infty} \omega|\Psi(\omega)|^2\, d\omega \tag{3.26}$$

Therefore, by shifting and dilating, the wavelet coefficients $W_{a,b}$ mostly represent information about signal $f(t)$ at time instant $a\bar{t} + b$ and frequency $\bar{\omega}/a$.

The variance of the wavelet coefficients indexed by the scale parameter b is defined as wavelet spectrum I_a:

$$I_a = E\left[|W_{a,b}|^2\right] \quad \forall b \tag{3.27}$$

It has been shown [41] that the wavelet spectrum uniquely characterizes the second-order statistics, e.g., auto-covariance function (ACF) in the time domain or power spectral density (PSD) in the frequency domain, of stationary or long-memory random processes at different scales in the way that the classic Fourier analysis does at different frequencies. Moreover, as illustrated in (3.25) and (3.26), the corresponding relationship between dilation scales and frequencies are clearly identified and intuitive from an engineering point of

view. In fact, Abry and Veitch [3] shows that the wavelet spectrum defined in (3.27) is a useful PSD estimator, and this estimator has been widely used in network traffic study since 1998.

It is worth noting that the wavelet spectral estimator still suffers from a convolutional bias due to the wavelet windowing effect, similar to the windowed spectrum estimators in time domain or frequency domain. However, because of the localization properties of the wavelet $\psi(t)$ in both time and frequency domains, the intuition brought forth by wavelets analysis is far more helpful in understanding the signals or time series under study.

3.2.4 Scaling Analysis of Network Traffic Using Wavelets

The notations used in this section follow the definitions used in [3].

A random process that fully captures characteristics of network traffic traces needs to be defined in continuous time as a general random process $X_t, t \in \mathcal{R}^+$. A discrete version of the general traffic $W_{\delta,n}, n \in \mathcal{Z}^+$ is also defined and δ_n is the digitizing granularity. Similar processes can be defined on the packet level. For example, if the random process $P_t, t \in \mathcal{R}^+$ is defined as the frame arrival process, the corresponding discrete packet counting process can be defined as $C_{\delta,n}$.

The above defined processes are correlated but by no means equivalent. They present different aspects of the captured traffic. For example, the paper [3] shows that the discretized processes preserve statistic properties of original processes over time scales beyond the aggregation unit δ. Therefore, it is

adequate to conduct analysis on the discrete processes so long as the time granularity δ chosen to be smaller than the time scales.

Large Time Scale Scaling: SS/LRD

Recently pioneered by Leland *et. al.* [40], researchers have started to study the statistical characteristics of network traffic, e.g., Ethernet, Internet backbone, and web server traffic. Leland, Taqqu, Willinger and Wilson showed [40] that aggregated Ethernet traffic is *self-similar* at different time scales. We now give a brief introduction to the so called self-similar property.

Let $x = (x(t) : t = 0, 1, \ldots)$ be a discrete wide-sense stationary stochastic process with constant mean $\mu = E[x]$ and finite variance $\sigma^2 = E[(x - \mu)^2]$. Let $r(k), k = 0, 1, 2, \ldots$ be its autocorrelation function:

$$r(k) = E[(x(t) - \mu)(x(t + k) - \mu)]/E[(x(t) - \mu)^2], (k = 0, 1, 2, \ldots) \quad (3.28)$$

If random process x is *long-range dependent*, the autocorrelation function $r(k)$ decays slowly as $k \to \infty$. Since the second-order statistic $r(k)$ captures the variance or burstiness of a stochastic process, an intuitive explanation is that the *burstiness* is preserved at different time scale of a self-similar stochastic process.

Following this ground-breaking work [40], researchers further investigated traffic statistics at various network layers and showed the existence of self-similarity in network traffic at almost every layer[63]. It is worth noting that most network traffic research, i.e. [3], focused primarily on scaling be-

havior of the traffic process over a range of time scales typically from 1 second and above.

Small Scale Scaling: Burstiness

The wavelet spectrum technique was used primarily for identifying LRD processes at large time scales [3]. However, the complex nature of traffic at small time scales requires more complete revealing of underlining multi-scale properties, and the wavelet spectrum could be easily extended to accommodate the request. As introduced before, the wavelet spectrum reveals second-order properties of random processes at all scales. Therefore, the wavelet spectrum technique can be applied directly to detect details of traffic at small time scales [32].

3.3 Measurement Setup in a Campus Building

In this section, we describe the network structures, hardware configurations, and software utilities used in measurements conducted in a campus building at the University of Texas at Austin (UT-Austin).

3.3.1 Description of Measurement Sites

The ENS building in the UT-Austin campus is the home of the Electrical and Computer Engineering Department. The ENS network provides wired (Ethernet) and wireless (IEEE 802.11b) network services to faculty, staff, and

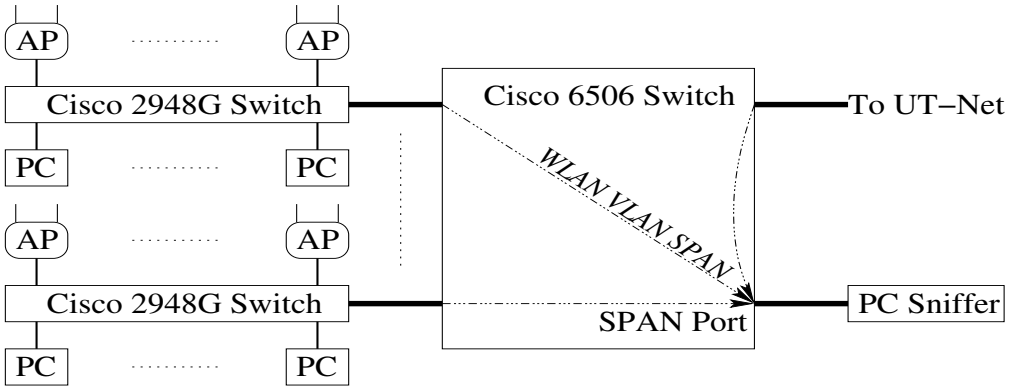

Figure 3.1: The network structure in UT-Austin's ENS building

students.

Fig. 3.1 shows the network structure in the ENS building. As shown in the figure, the core networking device of the ENS network is a Cisco 6505 switch, which carries all the network traffic from this building, including all the wireless traffic.

Measurement Hardware Configurations and Software Utilities

An Intel Pentium III desktop computer was used to capture network packets in the ENS network. This sniffer computer is pre-installed with Debian Linux 3.0r2 operation system and equipped with two Ethernet interfaces:

- Interface 1: 100 Mbps Ethernet interface for maintenance
- Interface 2: 1 Gbps Optical Ethernet Interface for network traffic sniffing

In order to capture the traffic, *tcpdump* 3.7.2 was enabled on the optical interface to capture the packet traffic in the ENS network.

On the Cisco switch side, Virtual Local Area Network (VLAN) [31] technology is adopted for the ENS network. By design, the ENS network is divided into several VLANs. In particular, all the WLAN traffic is grouped to a single VLAN, while the Ethernet traffic is tagged into other VLANs.

The Switched Port Analyzer (SPAN) feature supported by the Cisco switch enables a flexible and easy way to capture network traffic going through the switch. During the traffic measurement campaign, the SPAN feature was engaged on VLANs. Therefore every packet from one particular VLAN is mirrored to the gigabit optical Ethernet port to which the sniffer computer was attached. This measurement procedure is depicted in Fig. 3.1.

Combining the SPAN and VLAN techniques together, all the WLAN traffic carried on the ENS network was mirrored packet-by-packet to the optical interface of the sniffer computer. Therefore, *tcpdump* could capture all the WLAN packets. Throughout this measurement, no WLAN packet was lost as reported by *tcpdump*.

Considerations in Designing Measurement Procedures

The primary concern in capturing high-volume packet traffic on high-speed links, i.e., gigabit Ethernet, is the limited processing speed of the sniffer computer compared to the transmission rate of the traffic. It is very likely that the sniffer device may not be able to handle the traffic, especially during peak periods, and therefore dropping packets. In order to avoid the described situations from happening, we limited the capturing size of each Ethernet packet

to just include IP header information. The reduced capturing size increased the capacity of the sniffer computer, and resulted zero packet loss during the measurements as reported by *tcpdump*.

3.4 Scaling Analysis of ENS 802.11b Traffic

In this section, we apply the theory of wavelets in the analysis of IEEE 802.11b traffic traces. Our approach is to identify the burstiness from the traffic traces, and further compare it with the spectrum of the propagation channel. The objective is to conduct physical modeling of WLAN traffic.

3.4.1 802.11b Traffic Traces Pre-processing

As seen from Fig. 3.1, all traffic traces were collected at the Ethernet links between the APs and the Internet. Therefore, neither IEEE 802.11 control messages, e.g., RTS/CTS, nor corrupted packets, e.g., dropped packets due to collision, appear in the traces. To compare the spectra of the channel and the WLAN traffic, only outbound traffic (from WLAN to the Internet) is studied in order to identify impact that the radio channel has on traffic statistics.

Our traffic was captured in 2004 on the Internet. At the same period, Shakkottai *et. al.* [54] showed that RTT distributions on the Internet are almost exclusively concentrated above 10 ms time scales and peak around 100 ms and change very little. Based on the RTT range given in [54], the discretized traffic traces used a 5 ms time window and should preserve almost

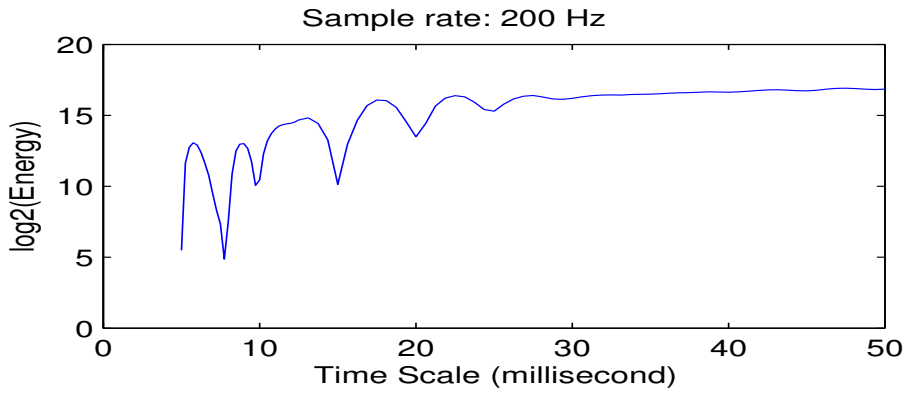

Figure 3.2: Wavelet Spectrum of UT-ECE WLAN Traces

all sub-RTT traffic correlation structure.

3.4.2 Burstiness of WLAN Traffic at Sub-second Scales

Fig. 3.2 shows the wavelet spectrum of a 20-minute traffic trace collected from 12:00 p.m. to 12:20 p.m. in ENS building. The resulting scaling properties of this trace is similar to traces collected during other time periods in the ENS building.

In Fig. 3.2, the wavelet spectrum figure shows a flat pattern when time scale is larger than 30 ms, which is similar to the pattern shown in [20, 33]. This flat pattern demonstrates that similar small scale scaling appearing in weird traffic traces also shows in the ENS WLAN traffic. Therefore, despite the difference in the physical transmission media, the ENS WLAN traffic and wired network traffic share similar statistical properties at time scales larger than 30 ms.

However, at time scales around 15 ms, Fig. 3.2 presents clear patterns

of fluctuations. For example, the wavelet spectrum of the ENS WLAN traffic peaks around 13 ms and 18 ms while dips at 15 ms time scale. Similar phenomena appear in all WLAN traffic traces collected from ENS building which have not been reported in wired traffic study literature before. Hence, it is very likely that the fluctuations in this range are peculiar to the ENS WLAN networks.

It is interesting to realize that Doppler shifts cause radio channels fluctuating around the sub-second time scales. Moreover, typical PSD of Doppler shifts has very similar shape as the fluctuations observed from Fig. 3.2. Considering the intuitive mapping relation between wavelet spectrum and PSD, it is very clear that Doppler shifts might be the mostly likely source of impact that generates the fluctuations in Fig. 3.2.

Fig. 3.2 also shows that identifying time scales is the key to the conjecture. Communication networks, WLAN networks in particular, are very complex systems, in which many factors, i.e., radio propagations, MAC, and network protocols, combine together and influence the traffic traces. However, each of these machineries has its own influential time scales and very likely makes its impact apparent at certain time scales. From Fig. 3.2, we suspect that the time scales around 15 ms might be the range in which the Doppler shifts during radio transmission can be identified from traffic traces. Because Doppler shifts are highly site-specific and motion sensitive, We design a new measurement campaign in a controlled environment to verify this conjecture. This portion of work is documented in next chapter.

3.5 Conclusions

In this chapter, we introduced the progress achieved in traffic studies with focuses on corresponding analyzing tools. In particular, wavelet spectrum is introduced and its relationship to PSD is established "intuitively". By following the common practice in the traffic study literature, the captured ENS WLAN traffic is analyzed by wavelet spectrum. The results reveal unusual fluctuations in a specific time scales around 15 ms. By relating wavelet spectrum to PSD, we conjecture that the observed fluctuations around this time scale might mainly be the result of Doppler shifts caused by motion during radio transmissions. This observation has not been reported in previous traffic or channel studies. Motivated by the observation, we further investigated the impact of Doppler shifts during radio transmission to the upper networking layers in the following chapter.

Chapter 4

Channel Characteristics: Sub-second Time Scales

4.1 Introduction

In radio communications, modeling propagation channel has long been a central part of research for developing PHY and MAC. Generally speaking, radio propagations are hostile due to the combined effects of multipath propagations, Doppler shifts, and intricate interactions between signals and environments [50]. Because of the difficulties in modeling propagation phenomena, analysis at the higher layers, e.g., the network layer and layers above, usually assumes the wireless channel to be in "ideal", less realistic states. In most cases, such assumptions also allow simple mathematical modeling or computational feasible simulations of wireless communication systems. In Chapter 3 we identified

the unusual fluctuations in WLAN traffic traces at sub-second time scales. It is interesting to further investigate the causes, which may be helpful in better understanding the radio channel.

In the 1960s, Gilbert [25] pioneered the use of a Markov process to model the generic communication channel and initiated the search for link layer channel models. Essentially, Markov channel models provide a probability value indicating the success rate of each data packet. Elliott [17] further refined Gilbert's Markov models and established the so called Gilbert-Elliott channel models. Fritchman [24] extended the Gilbert-Elliott model to a more general partitioned Markov framework.

Considerable effort has been made in the literature to verify, estimate or improve the link layer channel model within the framework of Gilbert-Elliott Markov models. A large portion of Markov channel models [60, 61, 58, 66] are directly derived from analytical channel models, especially the Rayleigh channel model [34]. However, Tan and Beaulieu [56] argued that first-order Markov models have difficulty in matching radio propagation correlations even from the analytical models. Also, analytical models such as Rayleigh models should not be applied blindly to all wireless environments, as they do not consider temporal correlations, and they do not properly describe the less severe fadings in wideband channels. Therefore, a better approach is to build the link layer models from site-specific channel measurements or models.

Swarts and Ferreira [55] verified the effectiveness of Markov characterizations of digital fading mobile VHF channels via measurements. They used

an FM transmitter to transmit four digitally modulated signals, FSK @ 300 baud, DPSK @ 1200 baud, QPSK @ 1200 baud and 8-PSK @ 1600 baud, with RF carrier frequency of 145.2 MHz. The estimated Fritchman Markov channel models worked well with 8-PSK but had large discrepancies with FSK modulation. Clearly, this result indicates that it is very important to be cautious when using link-layer channel models.

It is not a coincidence that constructing link layer channel models is difficult and confusing. The complex channel propagation phenomena require us to carefully study and understand the channel before starting to model it. For example, flat-fading channel models, e.g. Rayleigh and Rayleigh-based Markov models, should not be blindly used in frequency-selective fading environments. Therefore, a thorough study of the temporal correlation structure at the link layer from a generic radio propagation model is necessary for building link layer channel models.

Multipath is a key factor that contributes to channel variations. The time scales of multipath time dispersion is highly site-specific. For example, typical indoor environments exhibit time dispersions (or echoes) on the order of 10 ns to 1000 ns, while typical outdoor environments might have values up to tens of microsecond [50]. Depending on environmental factors and transmission characteristics, multipath can induce perceivable temporal correlation structure for packet traffic.

Induced by relative movement of transmitters, receivers, or reflectors in the physical channel, Doppler shift also generates channel fluctuations, but

typically at a much larger scale than typical multipath time dispersions. Channel coherence time is inversely proportional to Doppler shifts. Depending on carrier frequencies and relative velocities, Doppler shifts are typical in the range of tens to hundreds Hertz in current broadband networks. Therefore, coherence time is on the order of ten to several hundreds of millisecond [50].

It is interesting to observe the fact that channel coherence time is located in the range of time scales that exhibit complex scaling in traffic analysis, as documented in Chapter 3. Because of this apparent overlap between channel variations and traffic fluctuations, a cross-layer [53] approach that considers traffic and channel simultaneously follows naturally. By analyzing statistical properties at time scales critical to channel fluctuation and packet traffic, we expect to reveal characteristics of both propagation channel and packet traffic.

Leveraging upon tools and results in small scale traffic research works, we show in this chapter that WLAN traffic is influenced by the channel correlation structure at time scales that are coincident with Doppler shift. This result sheds light on physical modeling of wireless traffic at sub-second scales. On the other hand, our work also shows that it is possible to provide or improve site-specific channel estimation from observed traffic variations. It is well-known that channel state information, if available, can be intelligently exploited to improve system performance [7, 38]. By utilizing actual traffic to estimate channel parameters, not only could we reduce the overhead involved in some algorithms, but also yield better site-specific channel estimation.

We would like to point out that our objective is not to provide new

channel models or traffic models. The initial approach in this research may be somewhat similar to that in [37] which used a traffic trace analysis algorithm to construct link layer Markov models for GSM systems. However, our study is primarily focusing on channel and traffic interactions instead of a new link layer channel model. Specifically, we are interested in understanding and modeling both channel and network traffic over a range of coinciding time scales over which they interact with each other. Although modeling the traffic correlation structure or predicting channel conditions is difficult in itself, we claim that traffic-assisted channel prediction or channel-assisted traffic estimation are viable approaches to control and manage wireless networking systems. This has never been done to date, but clearly if end uses can reveal channel condition by relating received traffic flows to clearly identified environmental changes, e.g., Doppler by movements, it becomes possible to adapt and control MAC and PHY on the fly.

This chapter is organized as follows. Section 4.2 explains the wide-band channel experienced by 802.11b systems and its correlation structure due to Doppler shifts. Section 4.3 establishes the connection between the measured packet traffic and channel fluctuations due to Doppler effects. A systematic cross-layer approach is presented in section 4.4 examining the interactions of traffic and channel. Section 4.4 also proposes future research directions. We conclude this chapter in section 4.5.

4.2 Correlation Structure of Wideband Channel

Bello [6] established the theoritical foundations for modeling general wideband channels as experienced by IEEE 802.11 digital symbols. In [6], random time-variant linear systems are proposed to model radio transmission channels because of their influence on the communication signals. Several canonical channel models as represented by the Wide-Sense Stationary Uncorrelated Scattering Channel (WSSUC) are also proposed and widely used thereafter.

According to linear system theory, each linear system can be described by its impulse response function $h(t)$. In practice, the observed channel impulse function $h(t)$ often is the result of superposition of waveforms. Most likely, $h(t)$ is the result of the combination of very slow fluctuations and more rapid fluctuations.

When digital signals are transmitted over radio channels, the channel may show time or frequency selectivity [50] when the duration and bandwidths of the superposition waveforms are greater than these of the signals. In this case, the combined results of the rapid changing waveforms can be modeled as WSSUC.

The slow waveforms, however, typical can not be modeled by wide-sense stationary processes. However, as Bello asserts in [6], most slow waveforms do show quasi-stationary behavior, which makes mathematical modeling of radio channels from measurements feasible. Therefore, a complete general

description of many wide-band radio channels can be achieved by identifying the correlation structure of the channel at its stationary and quasi-stationary time scales, respectively. The final impact of the channel to transmitted signal is the combination both.

There are two major factors that affect channel properties [50]: multipath propagation and Doppler shift. In typical transmission environments, the rapid changing waveforms are the result of the constructive and destructive combination of multipath components. On the other hand, Doppler shifts generally cause slow fluctuations, which attribute to the slow waveforms. Hence, it is feasible to measure the correlation structures of multipath propagation and Doppler shifts separately while still providing a complete description of radio channels.

It is worth noting that most channel modeling efforts model the rapid fluctuating stationary channel. The slow fluctuations caused by Doppler shifts are almost forgotten. While it is understandable that most channel models are used by modem designers to whom the time scales of rapid channel fluctuations are of interests, Doppler shifts can actually impact packet transmission directly because of the coincide time scales in high-speed packet networks, e.g. WLANs. Therefore, it is time to model the slow fluctuations structure of radio channels.

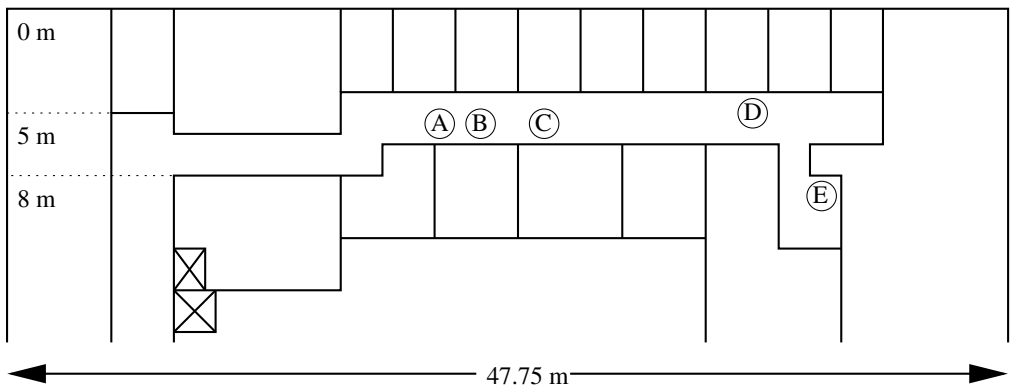

Figure 4.1: Measurement locations on the fourth floor of ENS building with IEEE 802.11b at channel 1

4.3 Effects of Doppler Shifts on Packet Traffic

To demonstrate the effect of Doppler shifts on channel variations at the interested sub-second time scales, comparison measurements were conducted in ENS building under controlled conditions. The objective of this measurement campaign is twofold. First, it is highly desirable to identify the conditions under which the sub-second channel correlation structures may affect upper layers. One the other hand, the characteristics of the channel correlation structure, if been identified, are key elements for intelligently system optimizations. As shown in [42], one key metric to quantify IEEE 802.11b channel quality is the average signal-to-noise ratio (SNR). Therefore, SNR and Doppler effects were the two selected metrics to be controlled in the measurements.

4.3.1 Description of the Measurement Environment

The partial floor plan of ENS building's 4th floor is shown in Fig. 4.1. The

transceivers, as indicated by the letters "A" through "E", were positioned approximately 1 meter high. Both the transmitters and the receivers (T-R) were stationary during measurements. However, Doppler shifts were created during one measurement by moving a metal board (1.5 m x 2 m x 1 cm) between point "D" and "E" with fixed speed of approximately 1.5 m/s.

All WLAN measurements were made with ORiNOCO 802.11b cards working on channel 1 with modulation rate at 11 Mbps. Besides the transmitter and the receiver, a third computer was setup to passively monitor the radio environment (from channel 1 to channel 5) throughout the experimenting periods. Because the surveillance computer reported no interfering radio activities in the interested bands, it is reasonable to assume that the only difference among the measurements was the injected Doppler variations and T-R separations.

A constant UDP packet flow was generated for 20 minutes during each measurement. Each UDP packet contains 12 bytes payload data. Besides WLAN measurements, an identical measurement was conduct over a 10 Mbps Ethernet link as well. The analysis would based on successfully received UDP packet series. Table 4.1 summarizes the measurement setups. It is worth noting that the SNR value at the *Static* and *Motion* case is chosen such that it falls into the range of "critical" SNR values [42].

The traffic traces were discretized to estimated wavelet spectrum. Because all the packets are of the same size, only the number of packets were counted without loss of generality. The UDP packet counts were aggregated

Table 4.1: Summary of measurement environment in ENS 4th floor

Label	**Tx**	**Rx**	**Dist. (m)**	**Avg. SNR (dB)**	**Doppler**
Back-to-Back	A	B	0	70	No
5-Meter	A	C	5	45	No
15-Meter	A	D	15	30	No
Static	A	E	25	20	No
Motion	A	E	25	20	Yes
Ethernet	N/A	N/A	N/A	N/A	N/A

over 10 ms period before estimating wavelet spectrum. As discussed in 4.3, sampling at 10 ms is adequate because it is at least twice as fast as the expected channel variation caused by Doppler.

4.3.2 The Impact of SNR to WLAN Traffic Structure

Following the notation used in network traffic modeling community, Fig. 4.2 shows the estimated energy of the discretized traffic traces over larger time scales. From the figure, the relationship between the wavelet energy [3] and time scales is clearly linear at this log-log plot over large time scales (over 1 second). Moreover, the slopes of log-log plot are approximately equal at large time scales. This observation demonstrates that these traffic traces present similar scaling behavior over larger scales irrespective of channel variations at smaller time scales, which is a direct result of the same traffic source used across all measurements.

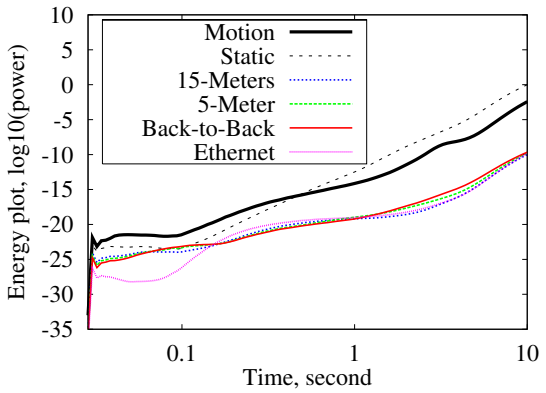

Figure 4.2: Energy plot of traffic time-series captured in controlled environments over large time scales

Although the slopes in log-log plots are equal at large time scales, the absolute values of the "energy" are different under different settings. For example, it is evident that the energy plot of the Ethernet traffic trace is smaller than that of the other traffic traces at almost every time scales. Jiang and Dovrolis [33] propose the idea of using energy values in energy plots to quantify relative burstiness of the studied traffic to Poisson traffic. Using the same argument, it is clear that channel changes the "relative burstiness" of the same traffic source although the scaling behavior, i.e., the slope in Fig. 4.2, remains the same.

Fig. 4.2 also reveals that the key first-order statistics of propagation channels, i.e., SNR, does not change the scaling effect of the network traffic at large scale, i.e., the slopes of the curves in Fig. 4.2 at large scales are similar . However, SNR does change the "relative burstiness" of the WLAN traffic. This observation is evident from the "Motion" and "Static" curves in Fig. 4.2.

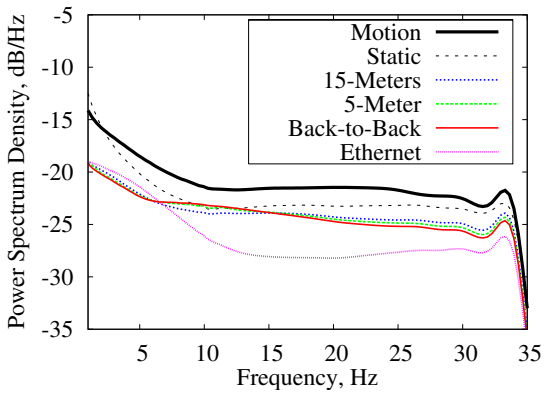

Figure 4.3: Power spectrum density (energy plot) of traffic time-series captured in controlled environments at sub-second time scales

Further discussions continue at next section.

4.3.3 WLAN Traffic Characteristics at Small Scales

At small time scales, e.g., around and below the knee-point at 0.1 seconds, however, in addition to the differences of energy levels, the slopes are no longer constant and therefore present more complex characteristics. Fig. 4.3 shows the power spectrum density (PSD) of the traffic traces at the sub-second time scales. Because the energy plot commonly used in network traffic research community, e.g. Fig. 4.2, is directly related to PSD as illustrated by (3.25) and (3.26), no information is lost during this conversion process.

Because the PSD of a random process represents the second-order correlation structure of the process, the difference between energy levels among these traffic traces actually quantifies the correlation structure of the channel at the corresponding time scales. For example, in the frequency range of 10 Hz

to 15 Hz, Fig 4.3 demonstrates that the *Motion* trace has higher correlation degree than the *Static* trace. In other words, the channel correlation structure in this time scales has changed. Because the only difference between these two traffic measurements is the injected Doppler shifts, it is evident that the channel variations caused by the movement is concentrated within this frequency range.

4.4 A Systematic View of Traffic, the MAC, and the Channel

4.4.1 Interactions Between Traffic Study and Wireless Channel

In traffic study, physical modeling of traffic, i.e., relating traffic properties to physics that generates actual traffic, is the key to comprehend and understand the characteristics of traffic[48]. Physical modeling enables theoritical explanations of observed traffic in concrete physical causes, and provides insights into the dynamic nature of traffic.

It has been shown empirically [36] that the complex scaling characteristics of network traffic are usually associated with the round-trip time. On the other hand, traffic variations and channel fluctuations are closed correlated in WLAN environments as well. Hence, proper selection of relevant time scales is important in analyzing traffic characteristics.

Our results show that the selection of time scales is a direct result of the channel fluctuations and the traffic variations. Both of them present strong physical modeling implications. Therefore, it is clearly physically that the traffic and channel time scales can be divided into three regimes: rapid fluctuations, slow fluctuations, and scales above TCP round-trip times. For MAC layer simulation and design, the sub-second time scales discussed in this dissertation work is the key.

4.4.2 Interactions Between the Channel and the IEEE 802.11 MAC

To make the channel more accessible to upper layers, researchers has been working on packet level channel models for several decades [25, 24]. As explained in Section 4.2, most existing channel models are not suitable for modeling the channel characteristics due to Doppler shifts. Therefore, they should not be applied directly to packet data traffic.

Regardless, there are still attempts to convert the existing channel models to link-layer models. However, even converting from existing propagation models to link layer models is not a straightforward process. Most conversions are ad hoc and error-prone [56]. On the other hand, although complex higher-order Markovian models, which are typical for the converted models, might be able to model channel measurements closely, the extensive usage of the two-state Clarke-Elliot Markov channel model shows the importance of a

simpler model. It will be interest to leverage on the results obtained from this dissertation work and construct a packet level channel model from physical modeling.

4.4.3 Examples

We present two examples of the possible applications of our results and the future link-layer channel models in this section.

Performance Anomaly of 802.11

Martin Heusse etc. al. [28] analyzes the performance losses in IEEE 802.11b environment caused by a phenomenon they named as *Performance Anomaly*. Performance anomaly is caused by the adaptive switch of modulation scheme from one modulation mode to another according to the changing signal strength.

For a single host in a 802.11b cell, suppose the propagation time is negligible. the overall transmission time is:

$$T = t_{tr} + t_{ov} \tag{4.1}$$

where t_{tr} is the packet transmission time and is dictated by the frame length, and t_{ov} is the overhead associated with the packet:

$$t_{ov} = DIFS + t_{pr} + SIFS + t_{pr} + t_{ACK} \tag{4.2}$$

t_{pr} is the transmission time of Physical Layer Convergence Protocol (PLCP) preamble. Clearly the overall transmission time T depends on the bit rate

used by the node for the transmission because both t_{tr} and t_{ov} change by the modulation rate.

Suppose there are N competing nodes. Obviously collision and exponential back-off mechanism will decrease the rate from one host to the access point. Let use $t_{cont}(N)$ to model the overhead. Now the overall transmission time for one packet is:

$$T = t_{tr} + t_{ov} + t_{cont}(N) \tag{4.3}$$

$t_{cont}(N)$ is related to the collision probability $P_c(N)$. The performance degradation due to competition it is obvious.

It is well known that the IEEE 802.11 MAC is designed to ensure long-term fairness for nodes to access the channel. Therefore, each node has approximately similar chance to access the channel. Hence overall all hosts must achieve the same throughput.

On the other hand, wireless nodes typically experience different signal levels due to T-R distance, fading, or Doppler shifts. Hence some nodes may operate at speeds lower then the others. Considering the fairness design of MAC, slower node essentially wastes spectrum resources since faster nodes need to wait for channel access. Therefore, no wireless node can achieve long-term throughput higher then the worse node. Therefore, The MAC protocol and channel fluctuations entangle together causing this unfortunate result. Predicting channel fluctuations at the time scales of packet transmission and channel accessing may help improve MAC protocol to avoid this performance

anomaly.

Measurement of MAC Metrics

It is relatively simple to design a plan to measure, simulate and analyze WLAN traffic and channel on a peer-to-peer link with unidirectional traffic. However, in a networked environment with bi-directional traffic, the situation becomes more involved. For example, it is no longer obvious regarding the throughput at the network level due to impacts from the MAC and higher layers with mostly highly interactive applications.

One possible approach to attack this system level issue is conduct system level optimization by combining the measured packet-lee channel results at the physical layer together with measured MAC layer metrics. For example, it is very likely that the packet collision probability $P_c(N)$ can be measured in real-time, which could yield very interesting scheduling results.

Each wireless host is an autonomous system. Traditional wisdom is to measure achievable performance one wireless node can attain and conduct optimization based on those measurement. However, wireless environments changes because of channel changes and mobility. It is necessary that wireless nodes to measure surrounding environment and adjust operation autonomously.

Throughput performance of IEEE 802.11 is sensitive to the number of competing terminals. An accurate estimation of the number of competing terminals n could be used by the host to estimate a reasonable throughput

it would expect. This throughput estimation could be further used by higher level applications for QoS purposes. On the other hand, this number could be used to optimize the MAC protocol performance. For example, it has been shown that 802.11 system performance could be greatly improved if associating the back-off mechanism adaptively to the number of competing terminals, as proposed by IEEE 802.11e working group. The estimated value of n could also be used in existing 802.11 networks for optimizing RTS threshold, load balance, etc.

Bianchi [9] uses a different approach: estimating the number of competing terminals at each host based on the collision information it observes. Suppose a wireless network has n contending terminals. Each terminal operates under saturated conditions. By convention, we will use W and m representing the exponential back-off mechanism, where $W = CW_{min}$ and $CW_{max} = 2^m CW_{min}$.

Let p be the conditional collision probability that a packet collides. Let τ be the probability that a terminal decides to transmit in a randomly selected time slot. Then [8]:

$$\tau = \frac{2(1-2p)}{(1-2-)(W+1) + pW(1-(2p)^m)} \tag{4.4}$$

$$p = 1 - (1-\tau)^{n-1} \tag{4.5}$$

Simplifying the above two equation yields:

$$n = f(p) = 1 + \frac{\log(1-p)}{\log\left(1 - \frac{2(1-2p)}{(1-2p)(W+1)+pW(1-(2p)^m)}\right)} \tag{4.6}$$

From this formula, the value of contending terminals n can be calculated by estimating conditional collision probability p. This environmental information could be passed to other layers for reference or performance optimization.

4.5 Conclusion

In this chapter, we show that the correlation structure of IEEE 802.11b channel is influenced by Doppler shifts, especially when the SNR level is at the critical level. This result is demonstrated by exercising a 802.11b peer-to-peer link with constant packet rate traffic. The time scales of such influence in typical 802.11b networks are located at the sub-second regime that is above packet transmission time while below the effective region of LRD phenomenon. This result also demonstrates that with adequate site-specific knowledge, i.e., building layout, T-R separation, and typical moving speed in the environment, it is possible to better model channel behavior and time scale correlations for IEEE 802.11 networks.

Chapter 5

Measurement Tools and Procedures

5.1 Introduction

Measurements are the key to achieve the proposed research goals in this dissertation work. At small time scales, the objective of our measurement campaigns include:

- Characterizing aggregated WLAN traffic properties
- Modeling WLAN channel from packet data input
- Capturing and analyzing/optimizing WLAN MAC mechanism

And at large time scales, the measurements should enable:

- Network usage analysis

- Backbone network usage provisioning
- Access point optimization

In order to fulfill the above requirements for WLAN traffic study, a suite of measurement methodology is established, including choices of hardware and software tools, and procedures to conduct measurements in different environments. This chapter presents the measurement framework in details. The common practices and tools used in network traffic research is introduced section 5.2. Section 5.3 presents a literature survey of WLAN traffic measurement study with focuses on measurement platforms. Section 5.4 documents some of the measurement procedures used this dissertation work.

5.2 Common Practices and Tools Used in LAN/WAN Environments

Measurement has been one of the most important approaches for monitoring, analyzing and eventually improving performance of data networks. There have been tremendous research activities in this area. However, WLAN traffic is still largely unknown. Fortunately, because TCP/IP protocol suites dominates modern networks, and because most of the deployed WLANs support TCP/IP from the very beginning of design, a large amount of tools and procedures from the similar measurements can be applied directly in the proposed WLAN traffic research.

This section introduces the procedures and tools for packet (or IP) based, networks. Because data collecting involves privacy issues, techniques such as hashing [1] for protecting this information has been available. In this research, these techniques will be enforced. No sensitive information that could be used to trace to individual user network usage, including visited IP addresses, used applications, etc., will be disclose from this research. However, certain information as defined in the contract will be confidentially provided to the sponsor.

It is worth-noting that there emerge some excellent tools from the open-source software community. Actually, most of them relate to research projects from universities. Open source software, which shows the most fundamental concepts and valuable implementation details from the publicly available source codes, plays a wonderful role for research projects like this one.

5.2.1 Common Practices

Data networks, as diverse as it could possibly be, are almost impossible to be fully monitored and measured by a single technique or a single software tool. Instead, measurements are taken at every layer for serving specific monitoring or performance benchmarking purposes. In this report, considering the status of the currently deployed WLANs, these measurement approaches are divided into two classes: microscope and macroscopic measurements. Both approaches could find their positions in this research work.

[1] Mapping one identify, e.g., each IP address, into a "random" number

Microscopic Measurement and Analysis

By microscopic, we emphasis that the small scale properties of traffic, irrespective of the layers at where the measurement is been taken, is of primary interests. For example, in WLAN networks, each MAC packet is scheduled to transmit based on long term fairness criteria. The enforcing mechanism is carrier sense multiple access and collision avoidance (CSMA/CD). However, a WLAN with fair resource allocation is not necessarily optimum if network level throughput is concerned. To improve the current scheme requires understanding the traffic properties, for example, how one packet experiences the radio channel, how two packets from different origins compete or interfere with each other. Understandings similar to this example have to be learned from microscopic measurements and further be verified by microscopic measurements. Device manufacturers and scheduling algorithm designers tend to take this measurement approach.

Macroscopic Measurement and Analysis

Very detailed traffic traces have to be captured in microscopic measurements. One the other hand, there is another class of users, who are providing the network service and would like to monitor the networks and evaluate performance over a longer period of time. Macroscopic measurements are conducted for these purposes. Unlike microscopic measurements which often take places at one single point, macroscopic measurements general span over a fairly large

amount of points, most of which are networking devices.

The most commonly used protocol for macroscopic measurements is simple network management protocol (SNMP). By simple it means the protocol itself is simple, which could roughly summarized by "reading statistics from one device" or "setting parameters for one device". To the contrary, the definitions of the values that could be get set are voluminous, and often different from devices to devices, vendors to vendors.

5.2.2 Traffic Capturing in LAN Environments

Different data link medium provides different data packaging. Theoretically, traffic data capturing and analyzing techniques should be applicable as long as the information been transmitted is packet data. For example, An ATM link should share the same traffic capturing and analyzing framework/tool set from that of a Ethernet LAN. However, implementation details often impose various practical difficulties.

In this research, fortunately, traffic is going to be captured in Ethernet or Ethernet-like LAN environments with no exceptions. Partially it is the result of the widely usage of Ethernet as a common inter-connecting technique. Also, it attributes to the designers of WLAN, who intentionally mimic the design of Ethernet.

Hardware requirements are relatively simple. A commonly seen (portable) personal computer with Ethernet and/or WLAN interfaces would be adequate. However, during the capturing process, even only the Ethernet packet header

(the first 68 bytes of each packet in our measurements) is been captured, the amount of data to be stored is still an issue. Especially during peak time, hard drive access time will be critical to keep track of network transmission. Thus, faster hard drive and larger memory are more important than faster CPU clock frequency for packet capturing purpose.

All the microscopic measurement tools used in this research project are non-intrusive in order to avoid artifacts. Sometimes, a unidirectional Ethernet cable is used to physically guarantee passive measurements.

Tcpdump

Tcpdump is used throughout our measurement campaign as the primary packet capturing utility. It is a classical traffic capturing and analyzing tool designed and actively maintained by UC-Berkeley. It primarily works on Unix platform as a light-weighted command-line utility and is perfect for traffic capturing in this research.

In most of our measurements, the first 68 bytes of each Ethernet packet is captured. This choice is made by taking privacy protection, information needed for this research and laptop PC hardware capacity into account. The first 68 bytes contain information up to layers based on TCP/UDP, which is adequate for this project.

Tcpdump also stores a time-stamp for each captured packet. The resolution of the time-stamp depends on operation systems. In our measurement setup, it is 10^{-6} second.

5.2.3 Tools for Traffic Data Interpretation and Analysis

Because microscopic network packet capturing is a network / hard drive intensive task, real-time processing is not applicable for most commonly seen personal computers. Thus, our approach is to capture raw packets and save them for off-line processing.

5.3 WLAN Packet Traffic Measurement in the Literature

This section reviews several papers in the area of wireless data traffic measurements, in particular, WLAN traffic. The primary objective of this literature survey is to study the pros and cons of other WLAN measurement setups

5.3.1 TCP and UDP Performance over a Wireless LAN

The paper[65] focuses on single hop interference-free performance measurement for WLAN environment. Their experiments compare the performance difference between bidirectional data traffic (TCP) and unidirectional traffic (UDP).

One computer installed with Linux operation system with kernel 2.0.32 consists of the basic measurement platform. To eliminate interfering factors during traffic measurements, all the irrelevant tasks are all terminated. Several slightly modified standard tools and wireless LAN card driver are adopted in

the measurement. The tools includes:

- Modified wireless LAN driver (with packet statistics and percentage of signal and noise levels recording capability).
- Modified *ttcp* for sending and receiving TCP and UDP packets.
- *netstat* for monitoring measurement computers activities.
- *tcpdump* for logging of packet sending/receiving activities.

The major weakness of the measurement environment includes:

- Unable to detect accurate value of physical layer signal strength. This is a common problem in WLAN measurement mainly due to the lack of openness and support from WLAN model manufacturers.
- MAC layer monitoring functionality is very weak. For example, there is no ability to directly detect MAC layer collisions.

Their basic measurement procedures are as follows:

1. Record initial states of wireless link interface with *netstat*.
2. Start *tcpdump* to monitor wireless link transmissions.
3. Use *ttcp* to send 10,000 packets with size 500, 1000 and 1500 bytes respectively.

In this measure campaign, physical signal strength is collected only at the beginning of measurements. However, because measurement is conducted under high signal strength environment. it is not a serious issue for the purpose of this paper.

There are several interesting observations from this paper:

- Packet loss increases with increased packet sizes
- UDP throughput increases with increased packet size while TCP throughput decreases, which is mainly due to fact that the relative high-rate packet loss is introduced into the feedback loop of TCP protocol.
- UDP testing software can easily overflow network implementation software, and introduce measurement errors. Therefore, some form of empirical flow control is necessary to ensure the correctness of WLAN traffic measurement results. Also, matching the sender and receiver by their processing power helps reducing over-flows.

The measurement results [65] show that unidirectional traffic is different from bidirectional traffic. Also, it is evident that physical layer, MAC layer and higher layers change WLAN characteristics together. Thus, this paper [65] quests for further studies to understand the impact of each mechanism on the measured traffic.

5.3.2 Measure Performance of the IEEE 802.11 LAN

Bing [10] conducts measurements of IEEE 802.11 WLAN traffic at the MAC layer, and examines the effect of delay caused by different packet sizes.

The measurement setup in [10] consists of one mobile and one AP. Both nodes are intentionally positioned close to each other to ensure strong signal levels. This setup helps to identify the impact of WLAN equipment in measurements, i.e., buffering at the access point and delay. An Ethernet connection is used in parallel between the AP and the mobile to benchmark the performance. One separate network analyzers are used for MAC packet profiling to quantify those two factors.

Bing's measurement results show that buffering effect appears when traffic is saturated. Consequently, packet delay is almost a constant mainly due to the larger queueing delay than that of the channel's. This paper reminds the importance of eliminating queueing effect in order to measure channel characteristics from packet traffic.

5.3.3 Measured Performance of 802.11a at 5 GHz

Chen [13] conducted IEEE 802.11a traffic measurements at Atheros's Sunnyvale office in California. The measurement environment is a typical office of area 265 foot by 115 foot. They use two Atheros 802.11a PC reference design cards for the measurement.

At each position, the measurement is conducted by collecting 1000 uni-

directional packets. Broadcast packets are sent because they require no acknowledge packets from the peers. The packet error rate is calculated for each rate and the optimal rate is selected as the data link rate and throughput is calculated accordingly.

Chen [13] shows that data link transmission rate changes due to modulation scheme switching is directly correlated to the T-R separation between the transmitter and the receiver. What is more, both 802.11a and 802.11b share the same rule: the longer the distance, the lower the data link would be. For 802.11a, the switching points are roughly at 24 foot, 36 foot, 80 foot, 85 foot, 130 foot and 170 foot. The data link rates decrease from 54 Mbps to 6 Mbps. For 802.11b, the distances are roughly located at 110 foot and 180 foot.

The measurement results in [13] suggest that there exist a possibility of modeling 802.11a and 802.11b throughput within the same framework despite different modulation techniques in the two standards.

5.4 Measurement Methodology

This dissertation work involves several measurement campaigns as presented in Chapter 2, 3, and 4. Each campaign requires different measurement plans to fulfill the requirements. However, there are several general guidelines that are applicable across these campaigns. The establishment of the guidelines is a process of learning from measurement experiments and from the literature.

This section describe these guidelines.

- Radio environment survey: several measurement campaigns require active measurements, i.e., network traffic has to be generated in a controlled fashion to excise the network. Because of the popularity of WLANs, it is very likely that there are interferences around the area. Moreover, sometime it is difficult to identify and gain access to the interfering sources. Therefore, site survey becomes extremely important to ensure the measurement results to be valid.

  During our measurement campaigns, the goal of the site survey of to identify the frequency range of the interfering sources in order to avoid these bands. To ensure measurement quality across the measurement period, the site survey should be conduct throughout the measurement period.

  In WLAN measurements, typically a separate computer is used for the site survey purpose. However, some monitoring applications, including the popular NetStumbler, send probing packets in a frequency-hopping fashion to actively search for nearby wireless devices. Obviously, the probing packets generate interferences and disturb the control traffic. Therefore, it is important to choose tools that do not cause the site survey computer to generate interference. Kismet is one of such passive WLAN monitors and was used successfully in our measurement.

- Configurations of sniffer computer: network traffic capturing is a del-

icate process both for the hardware and the software. High quality traffic traces demands a properly configured hardware and software system. It has been documented extensively in the literature about the design and implementation of sniffers. In the earlier days [40], special hardware devices were developed in order to ensure adequate speed to capture Ethernet traffic. However, since the progress of both the hardware and software on personal computer, traffic capturing on Ethernet or Ethernet-like networks has become simpler. However, there are still areas requiring attentions.

On the hardware site, the storage device needs to be fast with enough storage space. In our measurement, high-speed hard disks are used whenever possible. Also, it is advised to use computers with similar configurations, as pointed out in [65, 10].

Tcpdump is used exclusively in this research to *capture* network traffic. However, our experience proves that *tcpdump* can be very useful in pre-processing the captured traffic. In fact, it is more reliable and robust to use *tcpdump* than other customized tools for the pre-processing.

We also used tools donated by Wireless Valley Communications Inc. measuring WLAN throughput with unidirectional and bidirectional traffic during our measurement campaigns.

- Networking equipment: because of the fast-paced development of WLAN technology, WLAN modems experience fast changes as well. Although

the progressive changes consistently improve the transmission capacity of WLAN in general, it is not trivial to conduct WLAN traffic measurement mostly due to undisclosed hardware and firmware information, as well as lingering development of device drivers. At the time we conducted our measurements, IEEE 802.11b was chosen as the primary measurement platform because of its relative mature status and wide support. Also, the choice of vendors, i.e., Cisco and ORiNOCO, also was decided mostly by the openness of their 802.11b products.

IEEE 802.11 cards and access points are also factors need to take into account. To avoid discrepancies, standard PCMCIA WLAN modem cards are used in all measurements. It is also helpful in selecting WLAN cards and access points, and also potentially possibilities of changing physical setups such a antenna.

The above guidelines are adopted across the measurement campaigns to devise measurement plans that are suitable for different tasks. Certainly there are differences in each plan. However, the above methodology has proved to be very effective and constructive in guiding through the plans that presented in the previous chapters.

Chapter 6

Conclusions

6.1 Summary

Comprehensive measurement results of IEEE 802.11b WLAN traffic statistics and channel correlation structures are presented in this dissertation. This dissertation work, as mainly an experimental work, strives to present new traffic statistics and develop new methods for identifying channel characteristics. We believe that the results obtained in this dissertation work are going to be fundamental building blocks for comprehensive WLAN simulation and performance evaluation environments.

Chapter 2 presents two empirical models to predict IEEE 802.11B application layer throughput from measured SNR values that quantifies the large-scale fading characteristics of radio channels. Moreover, we show the traffic statistics measured at three commercial hotspots. With the knowhow of the

traffic statistics and the throughput prediction models, it is possible to better design and deploy public WLAN service infrastructure from the physical layer up to the application layer.

Inspired by the traffic statistics from Chapter 2 and some recent results from the network traffic study literature [1], we further discuss the WLAN traffic scaling properties in Chapter 3 with emphasis on small-scale burstiness analysis. Our result indicates that WLAN traffic exhibits rapid fluctuations in over the frequency range of Doppler shifts typically seen for a 2.4 GHz carrier communication system.

The results in Chapter 2 and 3 prompt the study of characteristics of WLAN channels in the time scales that are observable by packet data while statistically intact from influences by the higher layers. In Chapter 4, we extend the traffic analysis further to the WLAN channel, in which the channel is exercised by controlled packet traffic. Motivated by channel sounder techniques [50], we argue that it is a plausible approach to estimate channel conditions given intelligent selection of time scales. From comparison obtained from controlled measurements, we observe clear "burstiness" in the same frequency range as seen in Chapter 3, which according to the measurement design clearly is due to the Doppler shifts injected during the measurement.

In Chapter 5, the measurement methodology adopted throughout the dissertation work is summarized. In the foreseeable future, empirical measurement will continue be an important part of performance evaluation and design validation tool in wireless environments. Therefore, we hope this chapter to

serve as a general guideline in designing WLAN and other packet network measurement.

6.2 Future work

In this dissertation work, we conducted a series of measurements and analysis to model WLAN performance from a cross-layer point of view. Because of the complexity of radio propagations and the intricate interactions among layered network protocols, however, this dissertation work is a beginning of the cross-layer approach to study WLAN. Future work should further validate the measure-based cross-layer framework and investigate WLAN performance as deployment and standard work evolve. In particular, improved models with interference considerations, better comprehending of the interaction between link layer traffic and channel variations in networked environment, and intelligent channel estimations adapting to site-specific information are perhaps among the most interesting topics to be studied within the methodology established in this dissertation work.

Radio interference has become one of the most limiting factors. Without a paradigm shift, e.g., changes of frequency allocation policies, it is apparent that issues associated with interference are inevitable and only become worse as denser deployments of a diverse range of wireless networks appear.

During the measurement campaign, careful site surveys were conducted to ensure interference-free environments. Therefore, the proposed throughput

prediction models in Chapter 2 do not consider the effect of interference. We have not seen in the literature discussions of the influence of interference on achievable throughput. Therefore, it would be interesting to take interference into account for more general throughput models.

During the measurement campaign of validating the effect of Doppler shifts, interference also was monitored and avoided. Therefore, although the measurement results validated the existence of Doppler "fluctuations" at the link layer, it could not show how interference would influence the link layer traffic flows, let alone the combined effect of Doppler and interference.

There are other factors that influence the link layer besides interference. Among them, the MAC protocol is probably the most important mechanism. Unfortunately, the IEEE 802.11 MAC is very difficult to model. On the other hand, our emphasis in this dissertation work is on the physical layer. Therefore, peer-to-peer links were adopted to validate and quantify the effect of Doppler at the link layer. It is going to be a very meaningful while challenging task to improve upon the existing results to develop more comprehensive link layer models that consider radio propagation, the PHY, and the MAC in *networked* environments.

On key contribution of this dissertation work is the observation and validation of the effect of Doppler shifts at the link layer. It would be an interesting follow-up work to use site-specific knowledge to estimate Doppler shifts. During radio propagations, the Doppler shifts depend heavily on the angles-of-arrival (AOA) [50], which is entirely site-specific knowledge. One ap-

proach to streamline WLAN deployment is to integrate site-specific knowledge into the estimation of the link layer and to the throughput. Further study of the accuracy of this approach should be performed.

Finally, it is worth nothing that the methodology and basic cross-layer principles are not limited to WLAN systems. For example, one very interesting topic is how Doppler affects other data networks with larger coverage area. Examples of such wireless data networks include the commercialized 3G cellular networks and the emerging IEEE 802.16 networks. Mobility is much more prevalent in such networks and environment settings tend to be more complex. Therefore, in principle, the range of Doppler shifts should enlarge and the strength of Doppler may become stronger. The methods presented in this dissertation can provide a good starting point in verifying and therefore utilizing such phenomenon.

Bibliography

[1] Patrice Abry, Richard G. Baraniuk, Patrick Flandrin, Rudolf H. Riedi, and Darryl Veitch. Multiscale nature of network traffic. *IEEE Signal Processing Magazine*, May 2002.

[2] Patrice Abry, Paulo A. Gonçalvès, and P. Flandrin. Wavelet-based spectral analysis of $1/f$ processes. In *Proceedings of the IEEE International Conference on Acoustics, Speech, and Signal Processing*, volume 3, pages 237–240, 1993. Minneapolis, MN, USA.

[3] Patrice Abry and Darryl Veitch. Wavelet analysis of long-range-dependent traffic. *IEEE Transactions on Information Theory*, 44(1):2–15, 1998.

[4] Anand Balachandran, Geoffrey M. Voelker, Paramvir Bahl, and P. Venkat Rangan. Characterizing user behavior and network performance in a public wireless LAN. In *Proceedings of the 2002 ACM SIGMETRICS international conference on Measurement and modeling of computer systems*, pages 195–205. ACM Press, 2002.

[5] Magdalena Balazinska and Paul Castro. Characterizing mobility and network usage in a corporate wireless local-area network. In *Proceedings of the First International Conference on Mobile Systems, Applications, and Services (MobiSys 2003), San Francisco, CA, USA*. USENIX, 2003.

[6] Philip A. Bello. Characterization of randomly time-variant channels. *IEEE Transactions on Communications Systems*, CS-11:360–393, 1963.

[7] Pravin Bhagwat, Partha P. Bhattacharya, Arvind Krishna, and Satish K. Tripathi. Enhancing throughput over wireless LANs using channel state dependent packet scheduling. In *IEEE INFOCOM Computer and Communications Societies Conference on Computer Communications*, pages 1133–1140, 1996.

[8] Giuseppe Bianchi. Performance analysis of the ieee 802.11 distributed coordination function. *IEEE Journal of Selected Areas in Telecommunications, Wireless series*, 18:535–547, March 2000.

[9] Giuseppe Bianchi and Ilenia Tinnirello. Kalman filter estimation of the number of competing terminals in an IEEE 802.11 network. In *IEEE Infocom*, San Francisco, March 2003.

[10] Benny Bing. Measured performance of the IEEE 802.11 wireless LAN. In *24th Conference on Local Computer Networks*, 1999.

[11] R. B. Blackman and J. W. Tukey. *The Measurement of Power Spectra from the Point of View of communications Engineering.* Dover Publication, 1958.

[12] Jin Cao, William S. Cleveland, Dong Lin, and Don X. Sun. Internet traffic tends *toward* Poisson and independent as the load increases. In C. Holmes, D. Denison, M. Hansen, B. Yu, and B. Mallick, editors, *Nonlinear Estimation and Classification*, pages 83–109. Springer, New York, 2002.

[13] James C. Chen and Jeffrey M. Gilbert. Measured performance of 5-GHz 802.11a wireless LAN systems. Technical Report, Atheros Communications, 2001.

[14] Jeremy K. Chen and Theodore S. Rappaport. Throughput Measurements and Models of Public IEEE 802.11b Wireless Local Area Networks. Master's thesis, Dept. of Electrical and Computer Engineering, The University of Texas at Austin, 2004.

[15] Mark E. Crovella and Azer Bestavros. Self-similarity in world wide web traffic: evidence and possible causes. *IEEE/ACM Transactions on Networking*, 5(6):835–846, 1997.

[16] Ingrid Daubechies. *Ten Lectures on Wavelets.* Society for Industrial and Applied Mathematics, Philadelphia, PA, USA, 1992.

[17] E. O. Elliott. Estimates of error rates for codes on burst-noise channels. *Bell System Technical Journal*, 42(9):1977–1997, September 1963.

[18] Ashok Erramilli, Onuttom Narayan, Arnie Neidhardt, and Iraj Saniee. Performance impacts of multi-scaling in wide-area TCP/IP traffic. In *IEEE INFOCOM Computer and Communications Societies Conference on Computer Communications*, pages 352–359, Tel Aviv, Israel, Mar 2000. IEEE.

[19] Ashok Erramilli, Onuttom Narayan, and Walter Willinger. Experimental queueing analysis with long-range dependent packet traffic. *IEEE/ACM Transactions on Networking*, 4(2):209–223, 1996.

[20] A. Feldmann, A. C. Gilbert, and W. Willinger. Data networks as cascades: investigating the multifractal nature of Internet WAN traffic. In *ACM SIGCOMM conference on Applications, technologies, architectures, and protocols for computer communication*, pages 42–55. ACM Press, 1998.

[21] Anja Feldmann, Anna C. Gilbert, Polly Huang, and Walter Willinger. Dynamics of IP traffic: a study of the role of variability and the impact of control. *ACM SIGCOMM Computer Communication Review*, 29(4):301–313, 1999.

[22] Anja Feldmann, Anna C. Gilbert, Walter Willinger, and T. G. Kurtz. The changing nature of network traffic: scaling phenomena. *ACM SIGCOMM Computer Communication Review*, 28(2):5–29, 1998.

[23] Daniel R. Figueiredo, Benyuan Liu, Vishal Misra, and Don Towsley. On the autocorrelation structure of TCP traffic. *Computer Networks*, 40(3):339–361, October 2002.

[24] Bruce D. Fritchman. A binary channel characterization using partitioned Markov chains. *IEEE Transactions on Information Theory*, 13:221–227, 1967.

[25] Elliot N. Gilbert. Capacity of a burst-noise channel. *Bell System Technical Journal*, 39(9):1253 – 1265, September 1960.

[26] Matthias Grossglauser and Jean-Chrysostome Bolot. On the relevance of long-range dependence in network traffic. *IEEE/ACM Transactions on Networking*, 7(5):629–640, 1999.

[27] Benjamin E. Henty and Theodore S. Rappaport. Throughput Measurements and Empirical Prediction Models for IEEE 802.11b Wireless LAN (WLAN) Installations. Technical Report MPRG 01-08, Dept. of Electrical and Computer Engineering, Virginia Polytechnic Institute and State University, 2001.

[28] Martin Heusse, Franck Rousseau, Gilles Berger-Sabbatel, and Andrzej Duda. Performance anomaly of 802.11b. In *INFOCOM*, 2003.

[29] IEEE. *IEEE Standard 802.11: Wireless LAN Medium Access Control (MAC) and Physical Layer (PHY) specifications*. IEEE, 1999.

[30] IEEE. *IEEE Standard 802.11b: Higher Speed Physical Layer (PHY) extension in the 2.4 GHz band*. IEEE, 1999.

[31] IEEE. *IEEE Standards for Local and metropolitan area networksVirtual Bridged Local Area Networks*. IEEE, 2003.

[32] Hao Jiang and Constantinos Dovrolis. Source-level ip packet bursts: causes and effects. In *ACM SIGCOMM conference on Applications, technologies, architectures, and protocols for computer communication*, pages 301–306. ACM Press, 2003.

[33] Hao Jiang and Constantinos Dovrolis. The origin of TCP traffic burstiness in short time scales. Technical report, Georgia Institute of Technology, 2004.

[34] William C. Jakes Jr. *Microwave Mobile Communications*. Wiley-IEEE Press, 1994.

[35] Thomas Karagiannis, Michalis Faloutsos, and Rudolf H. Riedi. Long-Range Dependence: Now you see it now you don't! In *Global Internet*, November 2002.

[36] Thomas Karagiannis, Mart Molle, Michalis Faloutsos, and Andre Broido. A nonstationary poisson view of internet traffic. In *IEEE INFOCOM Computer and Communications Societies Conference on Computer Communications*, Hong Kong, March 2004.

[37] Almudena Konrad, Ben Y. Zhao, Anthony D. Joseph, and Reiner Ludwig. A markov-based channel model algorithm for wireless networks. *Wireless Networks*, 9(3):189–199, 2003.

[38] Ger Koole, Zhen Liu, and Rhonda Righter. Optimal transmission policies for noisy channels. *Operations Research*, 49:892–899, 2001.

[39] David Kotz and Kobby Essien. Analysis of a campus-wide wireless network. In *Proceedings of the eighth annual international conference on Mobile computing and networking*, pages 107–118. ACM Press, 2002.

[40] Will E. Leland, Walter Willinger, Murad S. Taqqu, and Daniel V. Wilson. On the self-similar nature of Ethernet traffic. *ACM SIGCOMM Computer Communication Review*, 25(1):202–213, 1995.

[41] Ta-Hsin Li and Hee-Seok Oh. Wavelet spectrum and its characterization property for random. *IEEE Transactions on Information Theory*, 48(11):2922–2937, 2002.

[42] Chen Na, Jeremy K. Chen, and Theodore S. Rappaport. Hotspot traffic statistics and throughput models for several applications. In *IEEE GLOBECOM Global Telecommunications Conference*, 2004.

[43] Chen Na, Jeremy K. Chen, and Theodore S. Rappaport. Measured traffic statistics and throughput of ieee 802.11b public wlan hotspots with three different applications, Feb 2004. Submitted journal publication, under review.

[44] Chen Na and Thedore S. Rappaport. Ieee 802.11b traffic variations and doppler correlations at sub-second time scales. To be submitted for journal publication, 2005.

[45] Chen Na and Thedore S. Rappaport. Measured ieee 802.11b channel correlation structures, Feb 2005. Submitted to Globecomm 2005.

[46] Chen Na and Theodore S. Rappaport. Measured wireless LAN public hotspot traffic statistics. *IEE Electronics Letters*, 40(19):1202–1203, September 2004.

[47] Prabhakar S. Naidu. *Modern Spectrum Analysis of Time Series*. Dover Publication, 1996.

[48] Kihong Park and Walter Willinger. *Self-Similar Network Traffic and Performance Evaluation*. John Wiley & Sons, Inc., 2000.

[49] Vern Paxson and Sally Floyd. Wide area traffic: the failure of poisson modeling. *IEEE/ACM Transactions on Networking*, 3(3):226–244, 1995.

[50] Theodore S. Rappaport. *Wireless Communications: Principles and Practice, 2nd Edition*. Prentice Hall, 2001.

[51] Rudolf H. Riedi, Matthew Crouse, Vinay Joseph Ribeiro, and Richard G. Baraniuk. A multifractal wavelet model with application to network traffic. *IEEE Transactions on Information Theory*, 45(3):992–1018, 1999.

[52] S. Y. Seidel and T. S. Rappaport. Site-specific propagation prediction for wireless in-building personal communication system design. *IEEE Transactions on Vehicular Technology*, 43(4):879–891, 1994.

[53] Sanjay Shakkottai, Theodore S. Rappaport, and Peter C. Karlsson. Cross-layer design for wireless networks. *IEEE Communications magazine*, October 2003.

[54] Srinivas Shakkottai, R. Srikant, Nevil Brownlee, Andre Broido, and kc claffy. The RTT distribution of TCP flows on the Internet and its impact on TCP based flow control. Technical Report tr-2004-02, University of Illinois and CAIDA, 2004.

[55] Francis Swarts and H. Ferreira. Markov characterization of digital fading mobile VHF channels. *IEEE Trans. Vehic. Tech*, pages 977–985, November 1994.

[56] Christopher C. Tan and Norman C. Beaulieu. On first-order markov modeling for the Rayleigh fading channel. *IEEE Trans. on Commun.*, 48(12):2032–2040, December 2000.

[57] Diane Tang and Mary Baker. Analysis of a local-area wireless network. In *Proceedings of the 6th annual international conference on Mobile computing and networking*, pages 1–10. ACM Press, 2000.

[58] William Turin and Robert van Nobelen. Hidden Markov modeling of flat fading channels. *IEEE Journal on Selected Areas in Communications*, 16(9):1809–1817, December 1998.

[59] Darryl Veitch and Patrice Abry. A wavelet based joint estimator of the parameters of long-range dependence. *IEEE Transactions on Information Theory*, 45(3):878–897, April 1999.

[60] Hong Shen Wang and Nader Moayeri. Finite-state markov channel - a useful model for radio communication channels. *IEEE Transactions on Vehicular Technology*, 44(1), February 1995.

[61] Hong Shen Wang and Nader Moayeri. On verifying the first-order Markovian assumpition for a Rayleigh fading channel model. *IEEE Transactions on Vehicular Technology*, 45(2), May 1996.

[62] P. D. Welch. The use of fast fourier transform for estimation of power spectra: A method based on time averaging over short, modified periodograms. *IEEE Transactions, AU*, 15:70–73, 1967.

[63] Walter Willinger, Murad S. Taqqu, and Ashok Erramilli. *A bibliographical guide to self-similar traffic and performance modeling for modern high-speed networks*. F. P. Kelly, S. Zachary and I. Ziedins (eds.), Oxford University Press, Oxford, 1996.

[64] Walter Willinger, Murad S. Taqqu, Robert Sherman, and Daniel V. Wilson. Self-similarity through high-variability: statistical analysis of Ether-

net LAN traffic at the source level. *IEEE/ACM Trans. Netw.*, 5(1):71–86, 1997.

[65] George Xylomenos and George C. Polyzos. TCP and UDP performance over a wireless LAN. In *INFOCOM (2)*, pages 439–446, 1999.

[66] Qinqing Zhang and Saleem A. Kassam. Finite-state Markov model for Rayleigh fading channels. *IEEE Transactions on Communications*, 47(11):1688–1692, Nov 1999.

[67] Zhi-Li Zhang, Vinay J. Ribeiroz, Sue Moonx, and Christophe Diot. Small-time scaling behavior of Internet backbone traffic. In *IEEE INFOCOM Computer and Communications Societies Conference on Computer Communications*. IEEE, 2003.

Vita

Chen Na was born May 11, 1974, to Xinbang Na and Yuxiu Lei in Xi'ning, China. In 1996 and 1999, he graduated from Tsinghua University, Beijing, China, receiving his B.S. and M.S. in Electrical Engineering, respectively. Subsequently he joined Bell Labs China as a Memeber of Technical Staff (MTS) working on Telecommunication Management Network (TMN) related projects. He has been with The University of Texas at Austin since 2000. He is married to Xuejiao Liu.

Permanent Address: 2501 Lake Austin Blvd. C203, Austin, TX 78703

This dissertation was typeset with LaTeX 2_ε[1] by the author.

[1] LaTeX 2_ε is an extension of LaTeX. LaTeX is a collection of macros for TeX. TeX is a trademark of the American Mathematical Society. The macros used in formatting this dissertation were written by Dinesh Das, Department of Computer Sciences, The University of Texas at Austin, and extended by Bert Kay and James A. Bednar.