2015

Lower Body Exoskeleton Powered by Epidermal Electronics Systems

Francis Azari
Virginia Commonwealth University

Forrest Baber
Virginia Commonwealth University

Saswat Mishra
Virginia Commonwealth University

Karan Patel
Virginia Commonwealth University

Juan Soto
Virginia Commonwealth University

VCU School of Engineering

Make it real.

VIRGINIA COMMONWEALTH UNIVERSITY

Lower Body Exoskeleton Powered by Epidermal Electronics Systems

Advisor: Dr. Woon-Hong Yeo, **Team Members:** Francis Azari, Forrest Baber, Saswat Mishra, Karan Patel, and Juan Soto
Mechanical and Nuclear Engineering, School of Engineering, Virginia Commonwealth University

Motivation

- Exoskeletons can potentially be used for therapeutic purposes, as well as load carrying with a reduction of energy consumption while walking.
- Stretchable electronics provide an easy-to-use platform for powering the exoskeleton.

Method

- By flexing the brachioradial and flexor carpi radialis muscles in the forearm, signals are transmitted by the epidermal electronic system
- The solenoids respond to this input by opening or closing, based on forearm flexion
- This results in the hydraulic cylinder, powered by a pump, to extend or contract

Our Vision

Original Concept

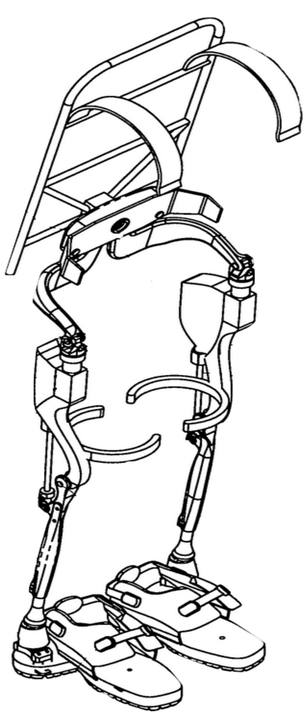

Final Design

Exoskeleton Components

Flexibility of EES Serpentine Design

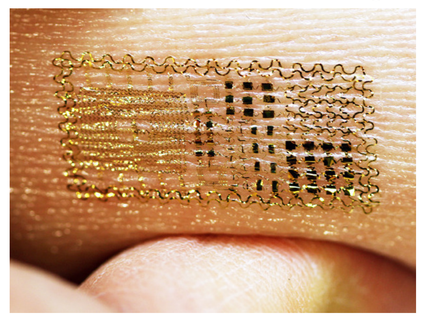

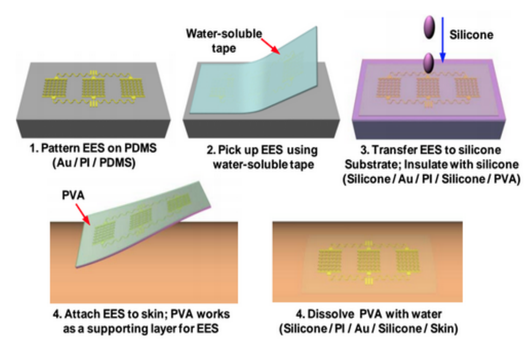

Auto-CAD Mapped Design

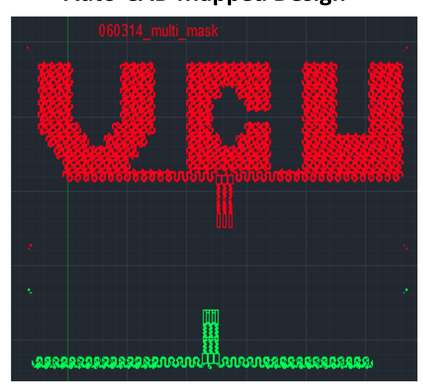

Magnified View of Serpentine Structure

Pre-Processing Image of Frame

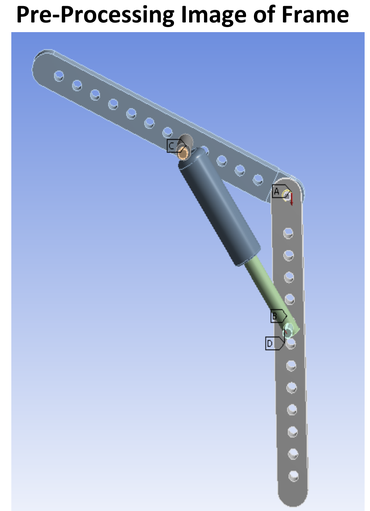

Post Processing, Maximum Load Until Failure

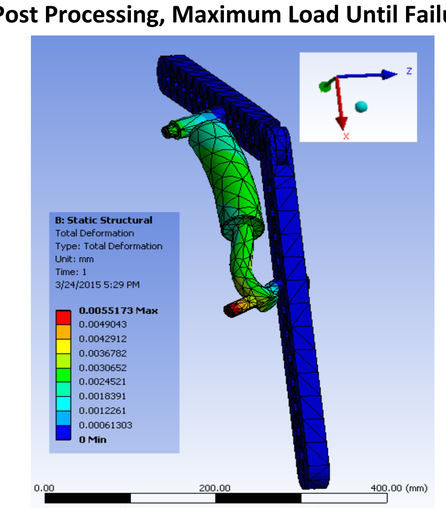

Synergistically Utilizing Two Systems

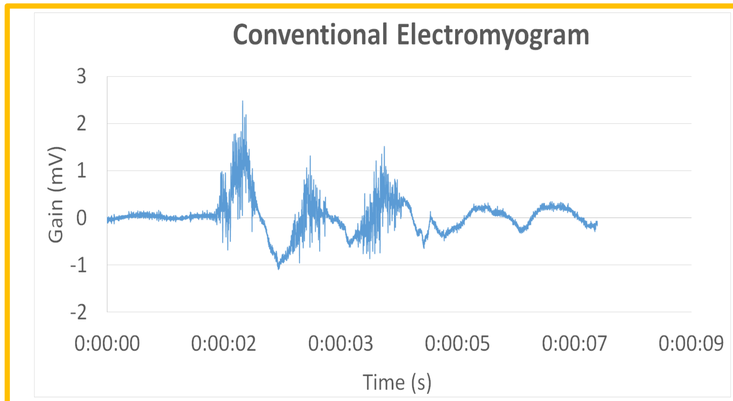

Logic Flow Chart

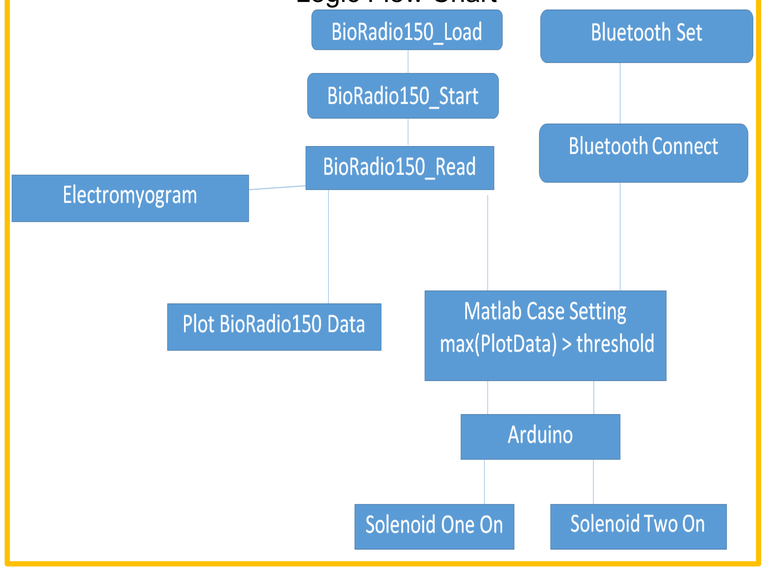

Conclusions

- Hydraulic powered leg exoskeletons provides support and improvements to the human bodies' shortcomings.
- EES provides a minimalistic support platform to trigger the exoskeletons motions.
- Multipurpose sensors have the potential to be coded for a multitude of specific functions.

Contact: Dr. Woon-Hong Yeo, Assistant Professor, VCU.
Email: whyeo@vcu.edu, website: www.people.vcu.edu/~whyeo