Nova Southeastern University
NSUWorks

The OTEC Liaison

NSU Digital Collections

9-1-1978

# Volume 2, Number 9 (September 1978)

The OTEC Liaison

Follow this and additional works at: http://nsuworks.nova.edu/nsudigital_otec-liaison

Part of the Energy Policy Commons, Environmental Studies Commons, Natural Resources Management and Policy Commons, Oceanography Commons, Oil, Gas, and Energy Commons, Science and Technology Studies Commons, and the Water Resource Management Commons

NSUWorks Citation

The OTEC Liaison, "Volume 2, Number 9 (September 1978)" (1978). *The OTEC Liaison*. Paper 13.
http://nsuworks.nova.edu/nsudigital_otec-liaison/13

This Newsletter is brought to you for free and open access by the NSU Digital Collections at NSUWorks. It has been accepted for inclusion in The OTEC Liaison by an authorized administrator of NSUWorks. For more information, please contact nsuworks@nova.edu.

AN INTERNATIONAL NEWSLETTER ENGAGED AS LIAISON FOR THE COMMUNITY OF OCEAN THERMAL ENERGY CONVERSION

# GLOBAL MARINE PICKED TO BUILD AND OPERATE TEST PLATFORMS OFF HAWAII

Global Marine Development Incorporated (GMDI) of Newport Beach, California, a wholly-owned subsidiary of Global Marine Incorporated of Los Angeles, has been awarded a contract for the performance of the OTEC-1 Early Ocean Test Program Platform.

GMDI has selected TRW as the principal subcontractor for this project to design the OTEC-1 plant systems, controls, and control center, and to construct the control-center module.

The following paragraphs describe the vessel chosen for conversion to the OTEC-1 platform, the innovative cold-water-pipe concept, the interface between the platform and the cold-water pipe, the site chosen for test performance, and mooring of the test platform.

### The Vessel

GMDI selected the US Navy T2-SE-A1 turbo-electric-driven tanker *Chepachet* (TAO-78) for conversion to the OTEC-1 test platform. Chepachet is currently in the National Defense Reserve Fleet at Suisun Bay, California under the custody of the Maritime Administration. *Chepachet* will be made available to DOE for use as the OTEC-1 test platform. Discussions between GMDI and cognizant regulatory bodies indicate that reclassification of *Chepachet* as an oceanographic-research vessel after rehabilitation and conversion will pose no difficulties.

(continued on Page 2)

The OTEC Liaison

VOLUME 2, NUMBER 9
September 1978

SOLAR OCEAN ENERGY

## JAPAN'S OTEC DEVELOPMENT MOVES AHEAD

### A REPORT ON JAPAN'S OTEC PROGRESS

As noted briefly in last month's TOL, an up-to-date report on Japan's current R&D status and plans for OTEC development was presented at the Fifth International Ocean Development Conference held in Tokyo September 25th through 29th. Dr. Abrahim Lavi of Carnegie-Mellon University, consultant to the US Department of Energy, attended that meeting. A copy of the Japanese report, authored by Takenobu Kajikawa and Takuya Homma of the Energy Division, Electrotechnical Laboratory (ETL) and the Ministry of International Trade and Industry (MITI), was for-

(continued on Page 5)

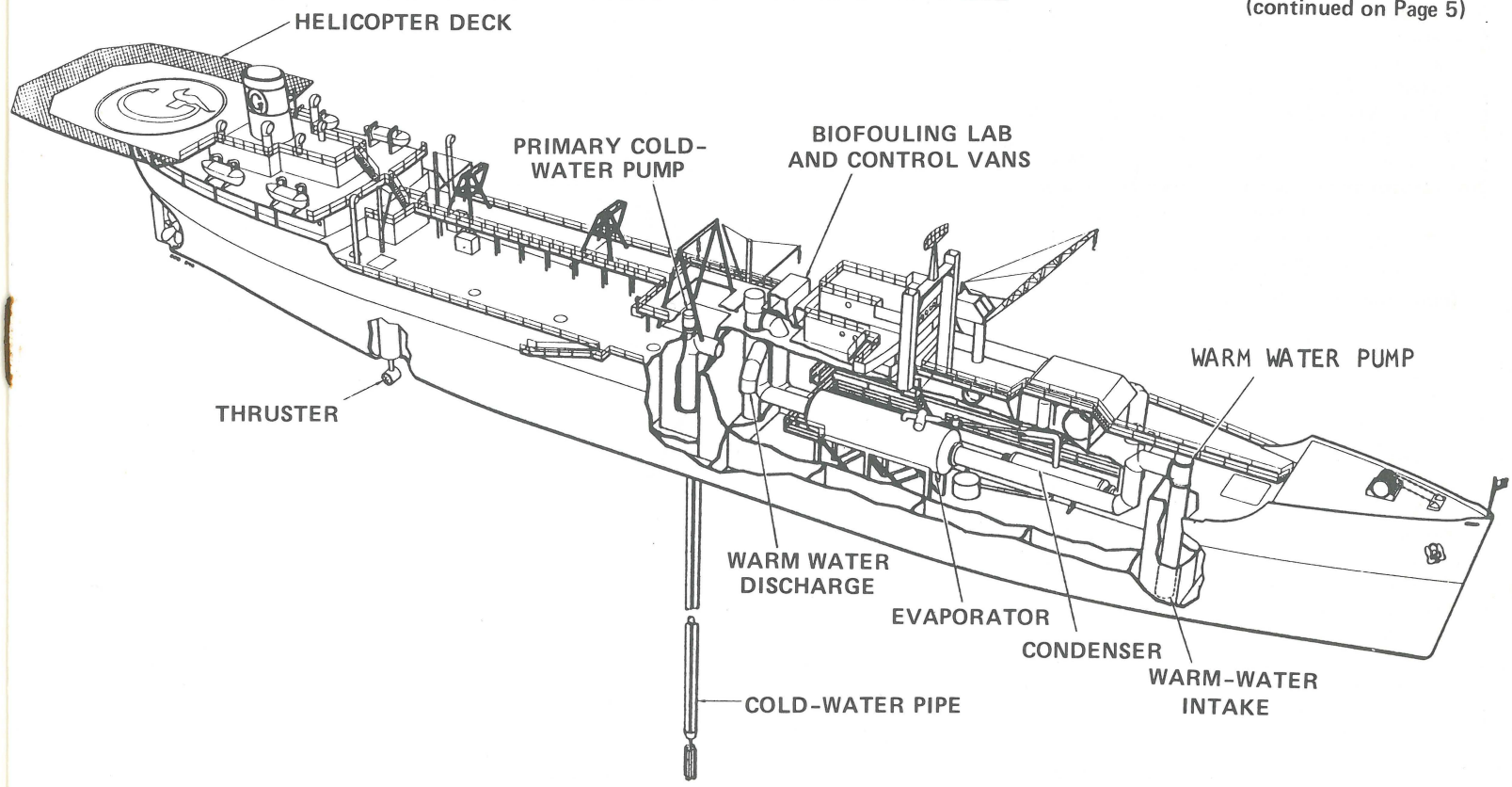


Figure 1. Isometric Cutaway of Chepachet Outfitted as OTEC-1 Test Platform

# The OTEC Liaison

AN INTERNATIONAL NEWSLETTER ENGAGED AS LIAISON FOR THE COMMUNITY OF OCEAN THERMAL ENERGY CONVERSION

VOLUME 2, NUMBER 9
September 1978

EDITOR/PUBLISHER
Richard Arlen Meyer

TYPESETTER AND COPY EDITOR
Shelly Treshansky

ART DIRECTOR
Pamela Greenfield

BUSINESS MANAGER
Robert Bernstein

CIRCULATION MANAGER
Denise Apter

SUBSCRIPTION MANAGER
Kathleen Guido

The OTEC Liaison is published monthly by Popular Products Inc., 1910 North Elston, Chicago, Illinois 60022, USA, (312) 489-5900.

Copyright 1978 by Popular Products, Inc., Chicago, Illinois. All rights reserved. Contents of this newletter may not be reproduced either in whole or in part without permission.
Printed in USA. Unsolicited manuscripts must be accompanied by a stamped self-addressed envelope for return. The OTEC Liaison will not assume responsibility for any unsolicited manuscripts or photographs. The OTEC Liaison will not assume responsibility for manuscripts or photographs left or submitted on speculation. Subscription prices: United States and possessions: one year $80, universities $70. Foreign: Add $9. Single copies: US $6 each, Foreign $6.50.

## GLOBAL MARINE PICKED TO BUILD AND OPERATE OTEC-1 TEST PLATFORM OFF HAWAII

(continued from Page 1)

### Functional Layout

The GMDI test-platform concept, shown in Figure 1, is based on a single enclosed OTEC-1 equipment compartment which provides sufficient space for operating, monitoring, and servicing all equipment. *Chepachet* lends itself readily to this application and provides ample space for a totally-enclosed OTEC-1 plant housed within the existing hull in a modified below-deck hold. The cold-water pipe will be installed in a through-the-hull well in close proximity to the plant. The self-contained data-processing and control center and the biofouling laboratory will also be installed in the immediate vicinity

(continued on Page 3)

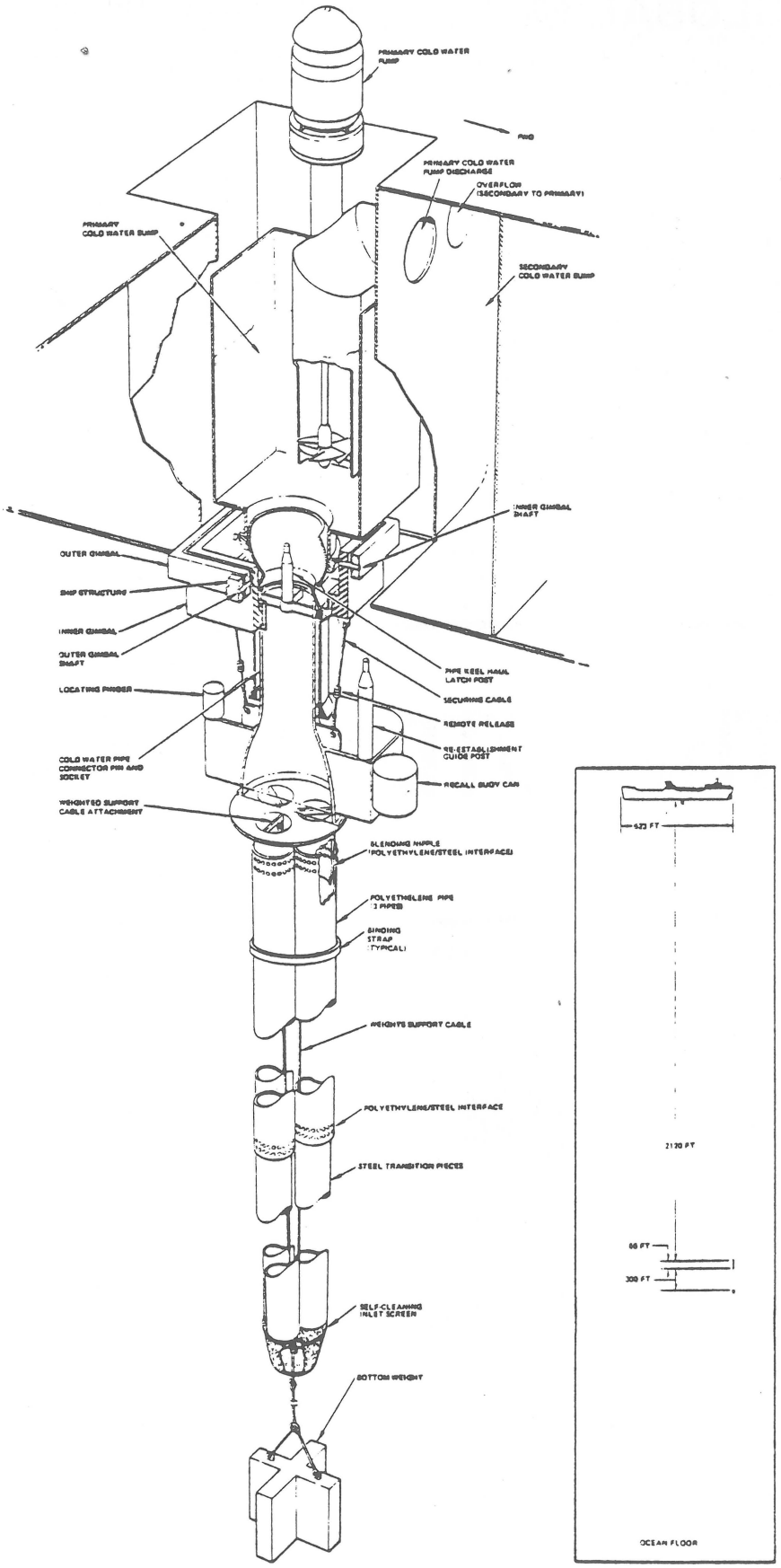


Figure 2. Isometric Cutaway of Cold-Water-Pipe Concept

(continued from Page 2)
of the OTEC plant to centralize all test-related activities. All operations and system test functions can thus be conveniently attended. There is adequate hold and deck space available for additional installations if desired.

### Seakindliness

A factor in the selection of *Chepachet* for OTEC-1 was the quality of seakindliness—that is, the dynamic behavior of the platform in a seaway and the effects of this behavior on the interface between the platform and the cold-water pipe, and on the operating crew. This favorable behavior largely determined stationkeeping requirements and the method of cold-water-pipe attachment, and provided evidence that the crew can perform its required functions safely and effectively on a stable platform in a controlled environment.

### Conversion

Refurbishment and conversion of *Chepachet* can be accomplished at a relatively-low cost in approximately eight months. All ship systems are available, and, with the exception of the OTEC compartment, can be used with little or no modification. The activation and rehabilitation will be accomplished by a West Coast USA shipyard.

The selection of *Chepachet* was based on a number of favorable qualities, including the following:

### Chepachet Features

- The vessel can operate at any of the five DOE-specified test sites.
- The vessel's turbo-electric-driven power plant can provide all the electric-power needs of the OTEC-1 test loop, or all the power needed for transit to or from the test site or alternate sites as required by DOE, thereby eliminating the need for auxiliary power systems and minimizing the need for supporting vessels and towing services.
- Existing personnel, messing, and recreational facilities for crew, test-director staff, and visitors are adequate and safe per regulatory-body requirements. Habitability improvements will be made, however, to meet current commercial practice.
- The vessel can move on or off station under her own power with minimum difficulty and minimum time loss if dictated by bad weather or other emergency.
- Sufficient area is available onboard the vessel for expansion and for adding next-generation heat exchangers for comparison testing.
- The vessel can be classified for operation in all oceans with no loading restrictions.
- Normal outfit of lifeboats and life rafts is provided for major emergencies, and is appropriately located near operating areas and personnel living quarters.

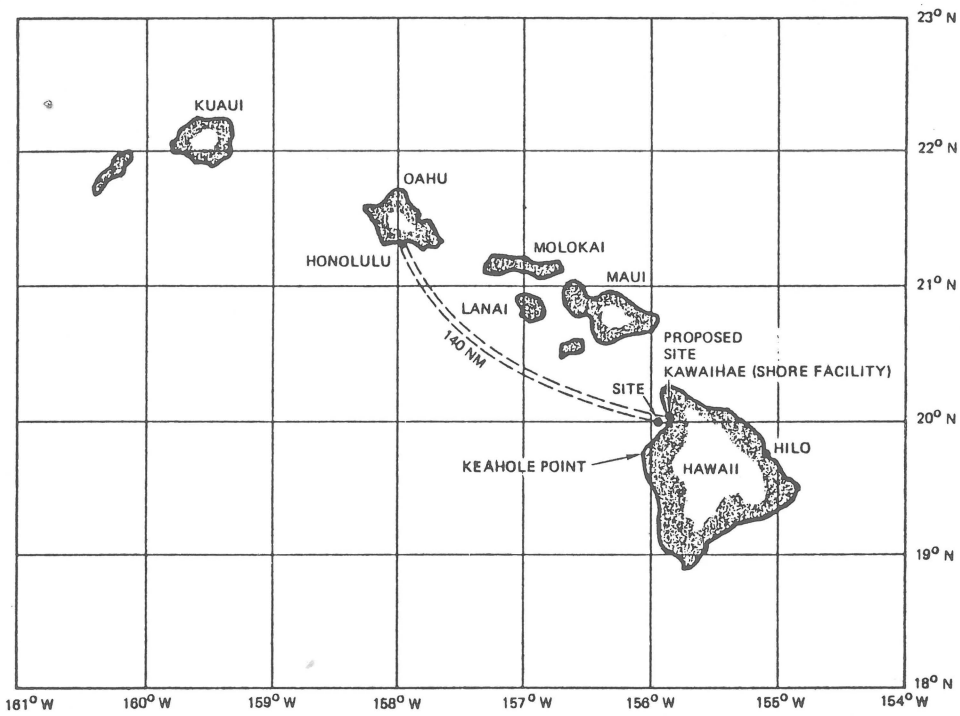


Figure 3. Selected Test Site

### Cold-Water Pipe (CWP)

The unique, proprietary cold-water-pipe concept proposed by GMDI is based on bundling three 48-inch-diameter-by-2100-foot-long polyethylene pipes that terminate in steel transition sections at both the upper and lower ends (Figure 2). The pipe interfaces with the ship through a gimbal platform that minimizes bending moments in the CWP (Figure 2). Polyethylene-jacketed steel cables run inside and down the full length of each pipe, are joined together at the bottom, and are connected to a single weighted cable that stabilizes the lower end of the CWP. Thus the cables and not the body of the polyethylene pipe carry the load of the bottom weight. This concept has several advantages over previously-considered pipe materials and configurations:

- The need for a sophisticated and costly onboard pipe-handling and storage system is eliminated.
- Disconnection and retrieval in a programmed abandonment mode or emergency situation is easy and safe.
- Because of the mounting gimbal and inherent flexibility of the polyethylene, the CWP can remain attached during all anticipated weather conditions up to and including the operating-limit sea state for the site.
- The CWP is virtually an off-the-shelf item. The polyethylene material has well-known and proven properties and is readily available in large diameters using standard production techniques. Field welding of joints is also a proven operation.
- The CWP is buoyant in seawater, non-corrosive, and resistant to biofouling.
- The smooth surface of the CWP lessens drag forces and hydraulic losses.
- The versatile, inexpensive polyethylene design may be modified as test results require.
- The polyethylene CWP will be manufactured in 66-foot-long extruded sections, transported to a local on-shore field site, butt-welded by the manufacturer to the desired length with 100%-effective fusion welds, and floated to the test site with the aid of a towboat for mating with the platform.

### Gimbal and Test-Platform Interface

The interface mechanism consists of a male (pin) and female (box) assembly and a two-ring gimbal to minimize bending moments at the top end of the pipe assembly. The gimbal assembly consists of two steel-fabricated ring structures mounted at the bottom of the ship's cold-water sump. These structures are designed to allow +15 and +30 degree transverse and longitudinal angular deflections, respectively. The pin end of the CWP assembly is held firmly in the box socket by the securing cables.

### Site Selection

GMDI/TRW have selected a test site approximately 18 nautical miles northwest of Keahole Point, Hawaii, as shown in Figure 3. Of the five candidate sites considered as potential test areas, this site offered the highest probability of accomplishing continuous, uninterrupted operation over the life of the test program. The site is readily accessible from the deep-water port of Kawaihae, and ample industrial, scientific, and logistic support is available from either Kawaihae or Honolulu.

(continued on Page 4)

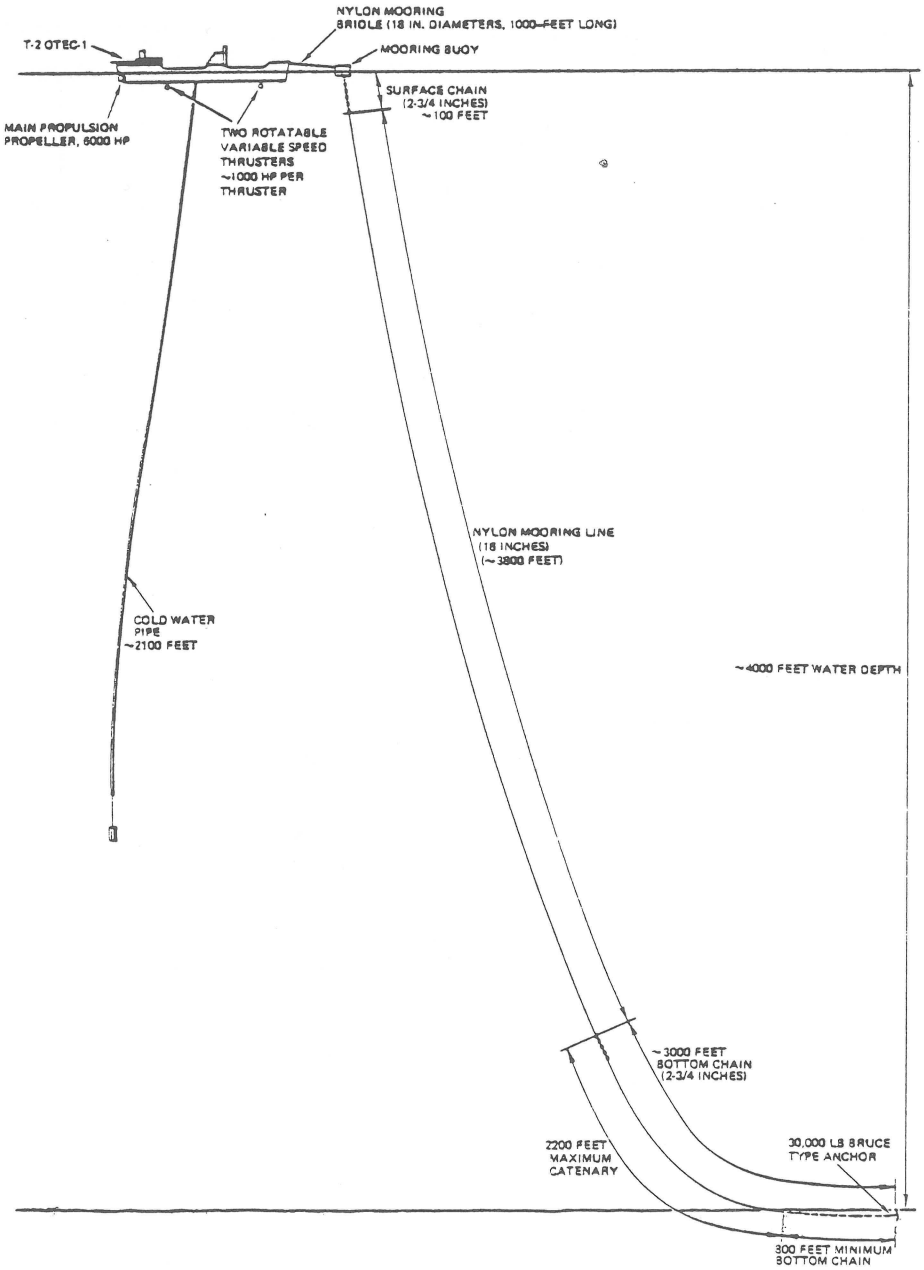


**Figure 4. Mooring and Stationkeeping Schematic**

**(continued from Page 3)**

Studies of the proposed area show the temperature gradient and prevailing climatic conditions, such as current speed, wave height, and wind, to be well within the specifications of the RFP. The site will easily offer the required number of operational days to ensure a successful test program.

### Mooring and Stationkeeping

The benign behavior of *Chepachet* in a seaway has enabled GMDI/TRW to propose a relatively simple, cost-effective approach to mooring and stationkeeping. Mooring the OTEC-1 test platform on site will be achieved with a passive, thruster-assisted system which consists of a bow-mounted, single-point, single-leg moor, as shown in Figure 4. The mooring is anchored with a conventional anchor suitable for the ocean bottom at the test site. All necessary handling equipment is located onboard *Chepachet,* and the mooring system can be deployed and recovered without the use of workboats or other auxiliary equipment.

Should unusual weather cause vessel motion to slacken the mooring line and create the danger of fouling of the cold-water pipe, two 1000-hp manually-steerable thrusters are provided to keep the platform on station. However weather information from the test site indicates that the thrusters would be unnecessary 95% of the time. In addition to allowing the mooring to be set prior to mating the cold-water pipe with the test platform, this cost-effective configuration eliminates the need for expensive stationkeeping equipment.

## GLOBAL MARINE PICKED TO BUILD AND OPERATE OTEC-1 TEST PLATFORM OFF HAWAII

*(The following story on OTEC-1 was provided by DOE prior to the receipt of the more-detailed story appearing elsewhere in this issue.)*

Global Marine Development Company of Newport Beach, California has been selected to design, build, and operate the nation's first floating test platform for extracting energy from warm ocean waters.

The Company plans to begin the first test using the platform off Hawaii in 1980.

The selection was announced by the Department of Energy, which will initially fund $25.4 million for the design and construction effort. An additional $17.3 million is expected to be required for the three-year testing phase. Global Marine, with subcontractor TRW Incorporated of Redondo Beach, California, was selected from four proposers.

Tests onboard the OTEC-1 initially will concentrate on the thermal performance of the heat exchangers and methods to inhibit and remove corrosion and the formation of biological slime, called "biofouling", on the water side of the sensitive heat-exchanger system.

Actual testing and evaluation of the heat exchangers and other components installed on the floating test platform will be done by the Energy Technology Engineering Center, a division of Rockwell International.

Global Marine has chosen to convert a Government-owned T-2 tanker, the *Chepachet,* currently in the Navy's moth-bath fleet. The system proposed by Global Marine using the converted tanker was determined to be safer, more stable, and a lower technical risk than the concepts proposed using the Hughes Mining Barge, which DOE had originally considered for the test platform. Final disposition of the Hughes vessel, which DOE took custody of in 1976, has not yet been determined.

Design and conversion of the tanker will take about 18 months. The Company would then begin test operations at a site it has selected 18 miles northwest of Keahole Point on the big island of Hawaii. There, water 2300 feet deep is roughly 35 to 40 degrees colder than surface water: the temperature difference needed to drive the OTEC system.

The Company plans to pump the colder water to the surface using three 48-inch-diameter polyethylene pipes bound together and attached by a gimbal to the tanker. The gimbal arrangement minimizes vessel motion caused by undersea forces acting on the almost-half-mile-long cold-water-piping assembly. This approach, DOE said, offered state-of-the-art development and posed little technical risk, making the overall proposal the most attractive combination of cost and technical considerations.

## JAPAN'S OTEC DEVELOPMENT MOVES AHEAD

(continued from Page 1)

warded to TOL prior to its presentation, but was received too late for the August issue. Pertinent excerpts are provided herewith:

Japan began studying OTEC in 1974 with conceptual designs for a 100-MWe power plant, with resulting electrical-power-generation cost estimates found to be comparable with costs of conventional power generation. (See Figures 1 and 2 in this issue.) Subsequent research has been carried out on heat exchangers, ocean platforms (with 1/200 scale models), mariculture, and possible environmental effects. The characteristics for five representative sites in Japanese waters were clarified. Work on the OTEC power cycle and enhancement of heat exchangers was conducted by ETL, MITI, and Saga University. Research on corrosion and biofouling has begun at the Government Industrial Research Institute in Chugoku.

| ITEMS | |
|---|---|
| gross power output (kW) | 100,000 |
| net power output (kW) | 77,210 |
| capacity factor | 0.9 |
| annual power output (kWh/year) | $6.087 \times 10^8$ |
| interest (%) | 8 |
| life (years) | 16 |
| residual cost (%) | 10 |
| (percent of total construction cost) | |
| turbines, generators, pumps (%) | 29.12 |
| heat exchangers (%) | 40.13 |
| cold water pipe (%) | 7.13 |
| platform and positioning (%) | 16.67 |
| working fluid (%) | 1.74 |
| pipes and auxiliary equipments (%) | 5.21 |
| total construction cost (million yen) | 49,767.7 |
| total annual cost (million yen/year) | 5,824.7 |
| capital cost (million yen/year) | 5,458.5 |
| operation and maintenance (million yen/year) | 366.2 |
| specific capital cost (thousands yen/kW) | 644.6 |
| electricity cost at busbar (yen/kWh) | 9.56 |

**ETL/MITI REPORT Figure 1. Summary of capital and operating costs for a 100-MWe OTEC power plant.**

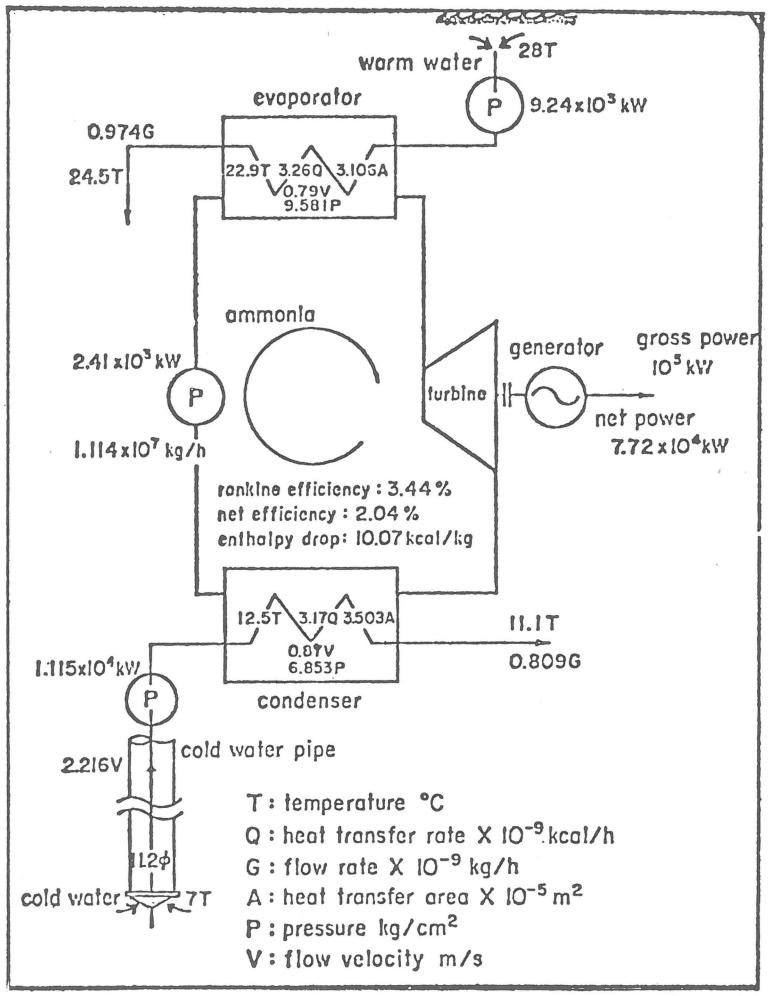


**ETL/MITI REPORT Figure 2. Specifications of an optimized 100-MWe OTEC power plant.**

### A Joint Effort of Government and Industry

Members of the OTEC Committee of the Japan Heat Management Association, established in 1974, are ETL, MITI, the Government Industrial Research Institute, Tokyo University, Saga University, Kagoshima University, the Central Research Institute of Electric Power Industry, Tokyo Shibaura Electric Company, Ebara Company, Tokyo Kyuei Company, Shimizu Construction Company, Mitsubishi Heavy Industry Ltd., Ishikawajima-Harima Heavy Industries Company Ltd., the Marine Ecology Research Institute, Daikin Industry Company, the Japan Marine Science and Technology Center, the Ship Research Institute, MOT, Kawasaki Heavy Industries Ltd., Sumitomo Electric Industry Ltd., Tokai University, Hitachi Ships Ltd., and the Electric Power Development Company.

(Obviously, the firms and institutions working on OTEC in Japan closely parallel US development. The relationships between the Japanese Government and private industry both organizationally and financially are unclear, as anyone who has studied the function of MITI knows. US interpretations of these relationships have been extensively discussed in articles in *Fortune* and *The New York Times* among others. Readers interested in these please write TOL.)

Favored at this time are ammonia as the best working fluid, a semi-submersible cylindrical platform design, and reinforced concrete for construction. Optimal material for cold-water-pipe construction will be selected from fiberglass, metal, post-tensioned concrete, and resin concrete. Connection of underwater cable and the platform is said to pose *the most important and difficult issue in terms of reliability,* and will be determined *in close relation to the anchoring system.*

### Mariculture Development Stressed

The Japanese report stresses *the enhancement of marine biological productivity as particularly important, because marine products are considered the major source in our country.* Preliminary studies indicate that the discharge from the cold-water pipe *might increase . . . productivity.*

The environmental aspects of proposed OTEC plants have been studied in the areas of adjacent-field effects, far-field effects, and influences on biological life. However few if any conclusions have been reached. Heat-exchanger construction and performance were detailed in the January issue of TOL, and these details have been amplified in the current report. Expansion of this information on heat exchangers is beyond the parameters of this newsletter; however the complete 17-page report is available through TOL (see below).

### Corrosion and Biofouling Studies Underway

Corrosion tests have been made at the Government Industrial Research Institute of Chugoku on heat-exchanger materials including titanium, aluminum, aluminum-brass, Hastelloy, copper-nickel alloys, and stainless steels. *Because the effect of geographic factors on the average rate of cor-*

(continued on Page 6)

## A REPORT ON JAPAN'S OTEC PROGRESS

(continued from Page 5)

*rosion of metals in seawater, water composition, PH, salinity, and temperature is generally not very significant, the test was begun by measuring the polarization behavior and rate of corrosion of the materials in artificial seawater.* Biofouling is assumed to be preventable and removable by *chemical and mechanical treatments,* but nevertheless it is expected that *new corrosion problems will arise.*

### Master Schedule of OTEC Development

Various technical R&D projects are being analyzed by the Japanese and are listed below. These would be undertaken *because economic evaluation... assures that OTEC power plants would become more viable compared with conventional oil-fired power plants by the introduction of advanced technology.* (Editor's note: This is the strongest statement yet by the Japanese Government regarding the future potential of OTEC.) The Japanese master schedule is shown in this issue (Figure 3).

● HEAT EXCHANGER

Material (Durability, Biofouling Prevention)

Enhancement

*Seawater Side*

Turbulence Promotion
Inner Fluted

*Working Fluid Side*

Evaporator

plate type (shell-less)
plate-and-shell type
fin-tube type
falling film evaporation
porous metal surface

Condenser

plate type (shell-less)
plate-and-shell type
fluted-tube type
low-fin-tube type

● TURBINE

Sealing Equipment

Low-Loss Control

● PUMP

Effect of Contained Gas
In Cold Seawater and Plankton
On the Pumping Operation

Durability

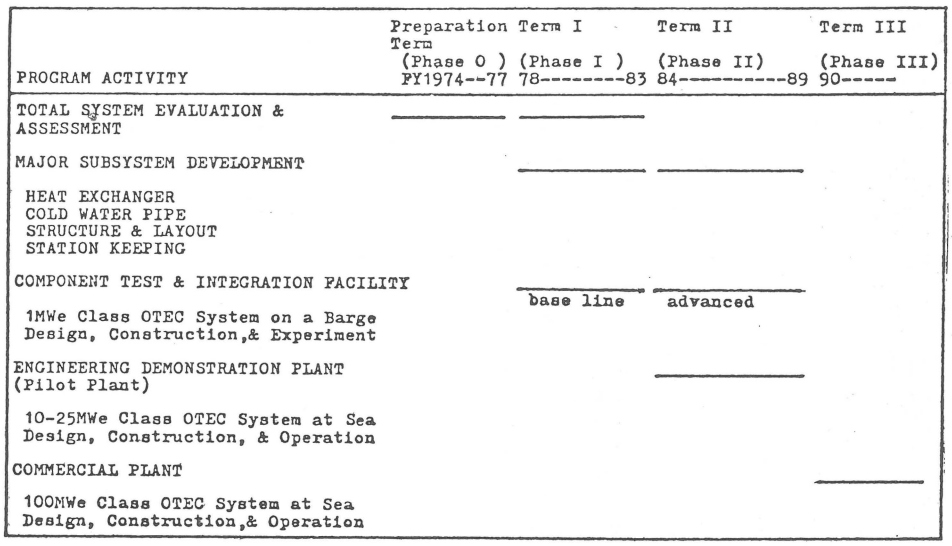


**ETL/MITI REPORT Figure 3. Master Schedule of OTEC Program Development.**

Plant Starting Method to
Minimum Auxiliary Power

Sealing Equipment of
Working Fluid Pump

Inline Pump R&D

Effect of Sea-Level Variation
On the Pumping Operation

● WORKING FLUID

New Working Fluid

Accurate Identification of
Thermophysical Properties of
Working Fluid and Seawater

Chemical Stability of
Working Fluid

Safety of Crew and Operators

Environmental Assessment Due to
Leakage of Working Fluid

● UNDERWATER POWER TRANSMISSION CABLE

Connection of the Cable
To the Station

● OCEAN MONITORING

Three--Dimension
Instantaneous Monitoring System

● OCEAN STRUCTURE

Accurate Estimation of
External Forces Due to Wave,
Current, and Wind

Accurate Structure Design

Deployment Method

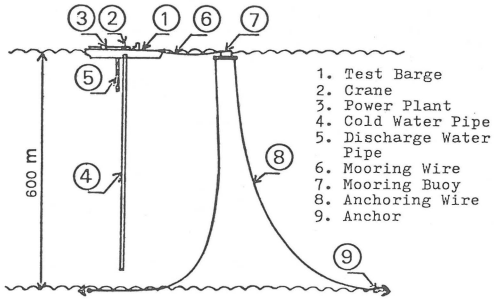


**ETL/MITI REPORT Figure 4. Placement of major OTEC components on a 1-MWe test barge.**

● STATION KEEPING

Accurate Estimation of
Drifting Force

Station Keeping
Method and Material

*Mooring Method Evaluation*
*(Anchor, Sinker, Buoy, Chain,*
*Wire and Rope, Behavior of Station)*

*Advanced Chain R&D*

*Advanced Wire R&D*

*Corrosion Prevention*

*Deployment Technique*

● INTAKE AND DISCHARGE EQUIPMENT

Moment Distribution of
Cold-Water Pipe

CWP Material and
Connecting Method
(Hull to Pipe, Pipe to Pipe)

(continued on Page 7)

## A REPORT ON JAPAN'S OTEC PROGRESS

Deployment Technique

Marine Biota
Attachment Prevention

● PLANT CONTROL

Safety

Low-Loss Control

Unmanned Plant

**1-MWe Engineering Test Facility Proposed**

The report from Japan contains plans for a 1-MWe OTEC test facility (see Figures 4 and 5 in this issue) to be built on a 30,000-freight-tonnage oil tanker. Various types of heat exchangers will be tested, as will methods of biofouling and corrosion prevention and control. Also researched will be cold-water pipe, station-keeping systems, and general environmental assessments. The test barge will be located, in sequence, at several representative sites.

**Potential Site Selections Evaluated**

Japanese researchers have carefully evaluated five proposed OTEC sites: Iriomote Island, Okinawa Island, Toyama Bay, the Osumi Islands, and the Izu Peninsula. For each of the five sites, three principal areas were considered: (1) oceanographic conditions, including monthly temperatures, wind velocities, storm frequencies, and wave conditions; (2) socio-economic conditions, including nautical activity and effects on fishing grounds; and (3) geographical conditions, including distance to shore, the nearest major port, and the nearest airport. Based on these conditions, detailed in the report, it would seem that Iriomote Island, Okinawa, and the Izu Peninsula are the leading contenders for the first Japanese test facilities.

---

## OTEC'S MARICULTURE POTENTIAL

TOL has received a subscription from a firm whose prime business is mariculture. As SOE/OTEC comes closer to implementation—the plans for Hawaii's MINI-OTEC include mariculture ponds—this aspect of OTEC's economic potential is becoming more visible.

## PERCY VISITS ARGONNE

Senator Charles Percy (D-Ill.) visited Argonne recently to view the research underway on OTEC heat exchangers. Senator Percy is well-informed on OTEC and is an advocate of its implementation.

**" There is no doubt that an OTEC power system will have technical and economic feasibility in the near future."**

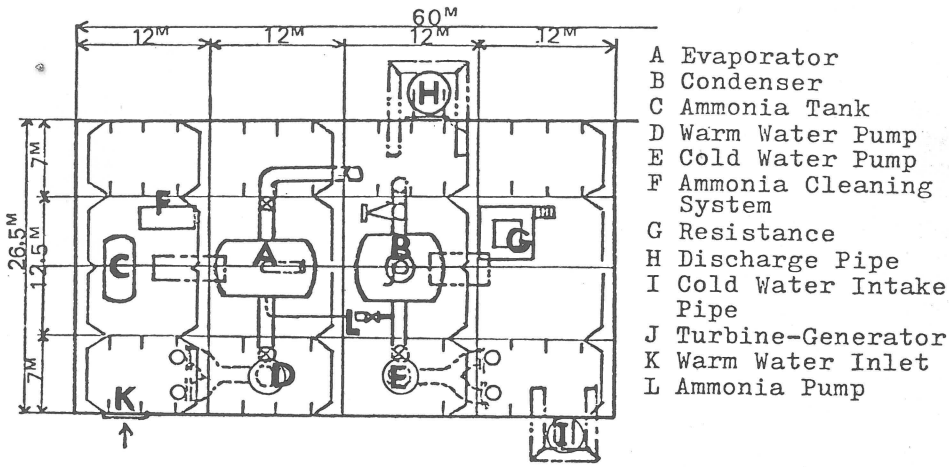


**ETL/MITI REPORT Figure 5. Concept of 1-MWe OTEC test facility at sea.**

## ABE LAVI RETURNS FROM JAPAN; HERE'S HIS ASSESSMENT OF JAPAN'S OTEC PROGRAM

Dr. Abrahim Lavi of Carnegie-Mellon University, a consultant to the US Department of Energy's OTEC program and a long-time OTEC researcher, has just returned from the Fifth International Ocean Development Conference held in Tokyo September 25th through 29th, where he presented a paper on US OTEC progress and consulted with Japanese researchers.

In a telephone interview October 3rd, Lavi gave TOL his assessment of Japan's progress in OTEC development. He does not feel that there is a major commitment at this time to a crash program on OTEC, and he believes that the level of knowledge of the Japanese researchers is not yet on a par with that of the US program. However he acknowledges that the Japanese could "catch up with us and surpass us very quickly; they have the machinery." He said "The work is impressive, and they seem to be very well organized, and there is very close co-operation between industry and government."

Dr. Lavi told TOL that the Japanese "experimental work is very detailed" and that the research program has more than one loop working with a turbine. Interest was expressed in a desire to undertake co-operative research with the US, and Lavi said this would be explored further with DOE. Some questions arose in Lavi's meetings with Japanese researchers regarding the relative seriousness of pressure drops experienced in their initial work, but this matter has not yet been resolved. Also pointed out was that researchers in Japan were working with heat-exchanger plates similar in design to those of Alfa-Laval.

TOL will continue to bring readers current information on OTEC progress by foreign nations as it becomes available.

## NEW SOLAR-ENERGY ESTIMATE: 20% BY THE YEAR 2000

The latest federal estimate of solar-energy contributions to the energy needs of the United States is 20% by the year 2000. The estimate is made in a report to President Carter by a policy-review committee which included policy analysts from 30 federal agencies. The committee concludes that vigorous federal action can push the solar contribution to between 15% and 20%. Without increased federal action, solar's contribution would be 5.5% if oil costs $18 per barrel in 2000, or 13.4% if oil costs $32 per barrel.

Policy options presented in the report include refitting of half the federal buildings with solar equipment, expansion of solar-energy tax credits, establishment of a solar-development loan bank, and testing of alcohol fuels in federal automobiles.

The policy review was ordered after the President's Council on Environmental Quality estimated last spring that solar could meet 25% of US energy needs by 2000. The Department of Energy estimates 10% solar in 2000.

## CARTER ADMINISTRATION REPORT ON OCEAN POLICY DUE IN DECEMBER

The long-awaited 400-page report on the Carter Administration's intentions regarding ocean policies, programs, and organization will be distributed before the end of 1978. The report, titled "US Ocean Policy in the 1970s: Status and Issues", will be available through the National Technical Information Service.

This extensive report, almost a year in the making, will hopefully cast some light on the numerous unanswered questions regarding the utilization of the oceans' resources. As OTEC technology develops it is essential that the social and political aspects of the use of Solar Ocean Energy/OTEC keep pace.

## REPORT ON HEAT EXCHANGER VIBRATION RELEASED BY ARGONNE RESEARCHERS

Flow-induced vibration in heat exchangers is a potential cause of acoustic noise and mechanical failure of tubes in future OTEC power plants. Failure due to vibration can result from fatigue, wear, collision of tubes, cutting at baffles, or leaks at tube joints. Researchers at Argonne National Laboratories (ANL), under the Department of Energy's Division of Solar Technology, have released a 40-page report titled *Flow-Induced Vibration in Shell-and-Tube Heat Exchangers for Ocean Thermal Energy Conversion (OTEC)*, authored by J. J. Lorenz and D. Yung of the ANL Components Technology Division. This study will undoubtedly influence the design and manufacture of heat exchangers in both pilot plants and eventual operational OTEC power plants.

The work considers crossflow-induced vibrations in shell-and-tube OTEC heat exchangers, with the shell-side fluid as a vapor, such as ammonia, and the tube-side fluid as seawater. The study's purpose is to assess the problem of flow-induced vibration in light of existing predictive methods. Models of the dominant excitation mechanisms are discussed: vortex shedding, turbulent buffeting, fluid-elastic instability, and acoustic excitation. Criteria are presented for assessing vibration, and equations are derived for predicting the maximum allowable span length as a function of crossflow velocity and other system variables. Also, regions of acoustic resonance and noise are defined. Among the system variables studied are tube diameter, tube material, tube-field layout, and pitch-to-diameter ratio. All models are presented in a simple form that can readily be applied to the mechanical design of OTEC heat exchangers.

Under "Summary and Conclusions" the report states:

*For 2.54 cm diameter titanium tubes in a 30°-triangular layout with PD = 1.25, the maximum allowable span length for a vapor crossflow velocity of, say, 1 m/s is 1.8 m. For reliable heat-exchanger design the span length should be less than 1.8 m to avoid tube vibration. With a crossflow velocity of 1 m/s, it was also predicted that acoustic resonance and noise will occur if the heat-exchanger shell diameter is between 15 m and 32 m. For tubes having the wall thicknesses specified in Table II, the predicted maximum allowable span length was found to increase with tube diameter. This behavior is essentially due to an increase in tube stiffness. When the tube diameter was increased from 2.54 cm to 5.08 cm, the predicted maximum allowable span length increased from 1.8 m to 3.5 m, assuming a crossflow velocity of 1 m/s. Changing the tube pitch-to-diameter ratio (from P/D = 1.25 to P/D = 1.5) and the tube material (from titanium to aluminum) had little overall effect on the results. A crude comparison was made of the severity of vibration for different tube-field layouts (30°-triangular, 60°-triangular, 45°-square, and 90°-square). It was found that all of the arrangements were affected about the same. Although differences were not very significant and should not be overemphasized, it was interesting to note that the 45° arrangement was the best (that is, least vulnerable to vibration), followed closely by the 30°, 60°, and 90° configurations in that order.*

For further information concerning this report, contact Jay Lorenz at (312) 972-5900.

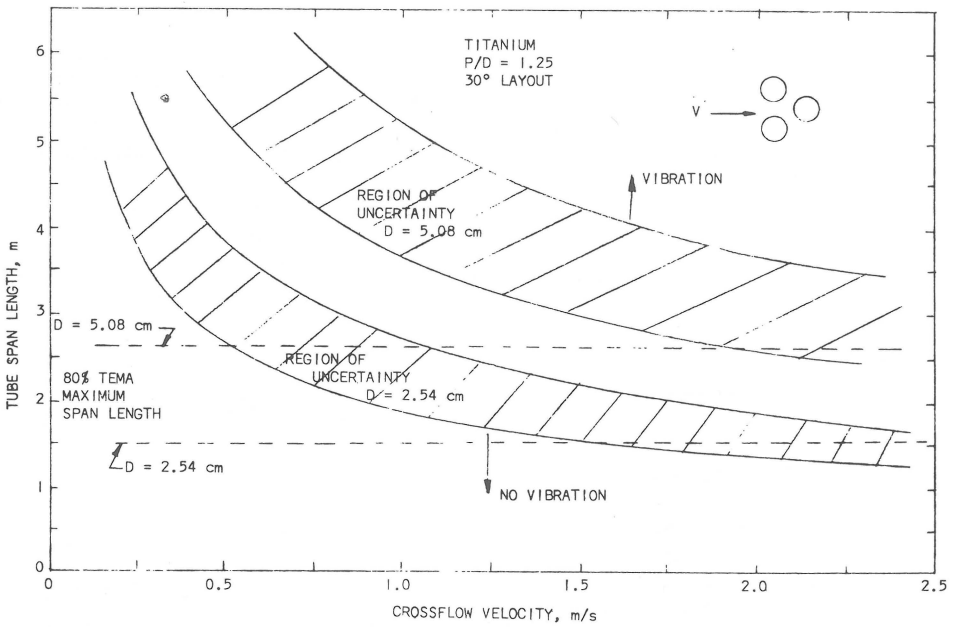


**Influence of Tube Diameter on Maximum Allowable Tube-Span Length**

**WALL THICKNESSES FOR ALUMINUM AND TITANIUM TUBES**

| | Outer Diameter cm (in.) | Wall Thickness cm (in.) |
|---|---|---|
| Aluminum | 2.54 (1.00) | 0.165 (0.065) |
| | 3.81 (1.50) | 0.218 (0.086) |
| | 5.08 (2.00) | 0.262 (0.103) |
| Titanium | 2.54 (1.00) | 0.071 (0.028) |
| | 3.81 (1.50) | 0.091 (0.036) |
| | 5.08 (2.00) | 0.122 (0.048) |

## OTEC SEACOAST TEST FACILITY AWARDED TO U OF HAWAII

A seacoast test facility supporting the nation's ocean thermal-energy conversion (OTEC) program will be designed by The Research Corporation of the University of Hawaii under the terms of a recently-awarded DOE contract.

The contract provides the University with about $480,000 to design the facility. If DOE approves the design, and a decision is made in January 1979 to construct the facility, it would cost about $6 million, with the University contributing approximately 40%.

The test facility would be located on state-owned land on Keahole Point, nine miles from the town of Kailua-Kona on the island of Hawaii.

Experiments that could be conducted at the proposed facility include studies of the effects of seawater and microscopic marine life on materials and components planned for use in OTEC power plants.

Components that could be tested at the facility include reduced versions of OTEC heat exchangers, which are critical to the success of the floating power plants. Although new heat-exchanger designs have been tested previously using fresh water, they have yet to be subjected to the corrosive environment of the oceans.

The seacoast facility would give researchers an opportunity to simulate the conditions future OTEC systems are expected to encounter.

Such plants would use the temperature difference between sun-warmed surface water and colder water from 2500 to 3000 deep to generate electricity.

## NO DOE PROGRAM ON TIDAL ENERGY

A letter from William L. R. Rice of the Hydroelectric Resource Development Office of Emerging Energy Sources of DOE advises TOL that there is "no existing program on tidal energy". However the Army Corps of Engineers has begun an update of the Passamaquoddy Tidal Project. We are investigating that project and will report any significant movement in that area.

## 1978 ANNUAL MEETING OF THE AMERICAN SECTION OF ISES HELD IN DENVER

The editor of TOL was vacationing in Colorado when he learned of the 1978 Annual Meeting of the American Section of the International Solar Energy Society (ISES), being held in Denver. Technical papers were presented in addition to papers on the commercial, political, economic, legislative, and educational aspects of solar energy, and exhibition booths of around 75 industrial firms. While an attendance of about 2,000 was anticipated according to the descriptive brochure, only about 450 individuals actually attended (as compared to 460 at the last OTEC meeting).

The primary focus was on solar heating and cooling, with the exhibitors showing homeowners, architects, and engineers their various components—and complete systems—for utilizing solar energy toward that end. While no OTEC-related exhibitors were present, the rapidly growing Solar Energy Research Institute (SERI),* based in nearby Boulder, had an extensive exhibit with OTEC prominently displayed. Moreover, SERI's Information Data Bank/Readling List on OTEC listed a number of publications that this editor had not been aware of. All of SERI's literature, in fact, devotes ample attention to OTEC.

** The Solar Energy Research Institute was created by Congress in 1977 to provide the country with a national center of excellence dedicated to serving the needs of the public and industry in the development of solar energy. SERI's primary mission is to function as the US Department of Energy's lead institution for solar-energy research, development, and demonstration (RD&D).*

**A gull's-eye view of the Denver Solar Energy Conference with SERI's extensive display top-center.**

## PROPOSED OTEC POWER PLANTS "TOO BIG"? NOT ANY MORE!

One of the objections to the rapid expansion of OTEC development pointed out by the much-critized Office of Technology Assessment (OTA) Report on OTEC (see the May issue of TOL) was that proposed OTEC power plants would be too large and beyond the capabilities of current state-of-the-art technology. A still further argument against this view is the near-complete construction of the world's largest offshore oil platform in the Gulf of Mexico. The 1200-foot structure, located in 10,000 feet of water 100 miles southeast of New Orleans, will be completed in November, with development drilling scheduled to begin in January of 1979. The huge platform, built for Shell Oil, was installed in three sections, with the base installed during the summer of 1977. This recent experience in construction of large structures offshore should provide a basis for estimation of similar work on planned OTEC test plants as well as ultimate operating power plants.

## INTERNATIONAL CALENDAR

**Listed below are conferences and symposiums pertinent to the OTEC community, ocean energy, and oceanographic technology. Major meetings recently completed are still listed for the benefit of any readers who wish to contact conference organizers for reports of proceedings.**

**Oct 10-11:** Annual Sea Grant Association Conference, Wentworth-by-the-Sea, Portsmouth NH. Info: Christi Duerr, News and Information Services, 22 Davis Hall, University of Rhode Island, Kingston RI 02881; (401) 792-6271).

**Oct 10-14:** Symposium on Marine Geodesy and Ocean Dynamics, Miami FL. Info: Dr. George Maul, NOAA-AOML, 15 Rickenbacker Causeway, Miami FL 33149; (305) 361-5761.

**Nov 7-9:** Position Location and Navigation Symposium, San Diego CA. Info: Dr. Joseph Ravenis, Cubic Corporation, 9233 Balboa Avenue, San Diego CA 92123; (714) 277-6780, Extension 360.

● **Dec 11-13:** Commercialization of Solar and Conservation Technologies Symposium and Workshop, Miami Beach FL. Sponsored by the School of Continuing Studies, University of Miami, Coral Gables FL. Info:. Clean Energy Research Institute, School of Engineering and Environmental Design, University of Miami, PO Box 248294, Coral Gables FL 33124.

**Feb 6-9:** Asia Marine, Hyatt Singapore Hotel, Singapore. Info: Peter Johnson, Asia Marine, 6006 Bellaire Blvd., Suite 101, Houston TX 77081; (713) 666-5188.

● **Feb 26-28:** Sixth Energy Technology Conference and Expo '79, Sheraton Park Hotel, Washington DC. Papers should focus on "The Application of Technology to Satisfy the World's Energy Needs". Submit abstract and biography prior to 13 Sep 78 to Martin Heavner, Energy and Technology Conference, 4733 Bethesda Ave. NW, Washington DC 20014, (301) 656-1090.

**Mar 12-16:** Corrosion/79, Atlanta Hilton Hotel, Atlanta GA. Topics include Cathodic Protection (Marine), Marine Corrosion, and Protective Coatings. Info: National Association of Corrosion Engineers, Conference Co-ordinator, PO Box 986, Katy TX 77450, (713) 492-0535.

● **Apr 30-May 3:** Eleventh Offshore Technology Conference, Houston TX. Submit abstracts no later than 1 Sep 78 to Program Manager, Offshore Technology Conference, 6200 N. Central Expressway, Dallas TX 75206. Info: OTC Headquarters, above address, Telex 730989 SPE DAL.

## SEA TECHNOLOGY MAGAZINE LAUDS OTEC PROGRESS

The cover and lead story in the August issue of *Sea Technology* magazine—the 19-year-old recognized publication—deals with ocean energy in general and with Solar Ocean Energy/OTEC in particular. Authored by Larry Booda, Editor of *Sea Technology,* some of the major portions are excerpted herewith, by permission of the publication and the author:

*Despite heavy competition from other long-term potential (10 to 30 years) energy systems, those related to the oceans as direct legacies of the sun's largesse are attracting ever wider attention, and, more importantly, funding support.... They are downstream in the 1990s and 2000s. Nevertheless, they represent steps forward in technology* **that will spell business for prime contractors and hundreds of subcontractor suppliers in ever-increasing volume during the 1980s.**

*Of all of the ocean-energy possibilities mentioned... OTEC has the greatest overall potential. That is the DOE opinion as stated by Dr. Bennett Miller, Acting Program Director, Solar, Geothermal, Electric, and Storage Systems of the DOE Energy Technology Division.*

Booda points out that *DOE's strategy is to use mainly state-of-the-art technology with some adaptions, plus some inno-innovations.... It must be noted that OTEC hulls would be no bigger than some offshore oil structures in the North Sea.* The article details the schedule of development in the years immediately ahead, as well as certain aspects of the components that require further refinement, such as the cold-water pipe, electrical-transmission lines, and, of course, heat exchangers. However... *some engineers have told Sea Technology that many of the technical problems have been solved.*

### Demonstration Necessary For Commercial Interest

Quoting Byron Washom from the Office of Technology Assessment (OTA) report on OTEC, the article states: *The fact that programs sponsored by the Department of Energy and other agencies are still in the research and development state, with their 10-megawatt modular experiment scheduled for 1982 or 1983, discourages immediate commercial interest. Simply stated, the future owner/operator of an OTEC will, under present conditions, remain passively involved until the technology is either partially or fully demonstrated or until alternative energy supplies become too scarce.* [Editor's note: Demonstration will take place in the spring of 1979 with Hawaii's "MINI-OTEC".]

### Institutional and Political Aspects Stressed

Editor Booda states: *At present sea law holds that ocean thermal energy, because of its inexhaustible nature, defies property or quasi-property rights.... Thus the status of OTEC is omitted, even though it exploits an energy source that is available to "all of mankind", a term that is the cornerstone of the Law of the Sea Conference.*

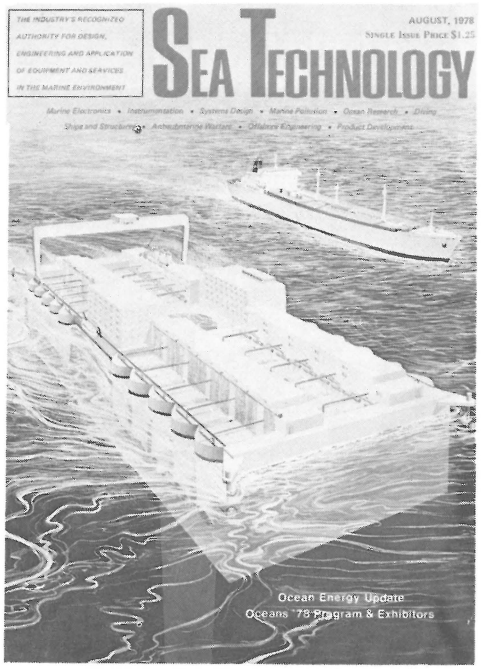


**Sea Technology's August issue focused on OTEC and was distributed at Oceans '78.**

*Washom warned that unless adequate public policy exists to mitigate or resolve institutional barriers, the development of an ocean-energy system may be suspended indefinitely during any of its phases—R&D, prototype, demonstration, construction, or operation. He recommended that Congress consider and review the recommendations of an interdisciplinary research team of the University of Southern California in 1977. Among the recommendations were:*

*- Establishment of a coherent federal energy policy that integrates the potential of alternative energy sources.*

*- Clarification of the Environmental Impact Statement (EIS) process for OTEC as required by the Environmental Protection Agency.*

*- Creation of a flexible patent policy that insures the economic appeal of OTEC to the engineering and scientific community.*

*- Encouragement of public utilities and other potential owners/operators to participate in research and development.*

*- Clarification of the ambiguities surrounding OTEC's status as a vessel.*

*- Clarification of jurisdiction and the international order.*

*- Co-ordination of the permitting procedures.*

### OTEC Leads the Way

*For about three years now DOE and its predecessor agencies having cognizance over OTEC have been examining legal and institutional questions that would appear in connection with developing and operating such a system both in US waters and in international waters. Finding the answers to them will be valuable beyond OTEC, and will apply to some of the other ocean-energy systems, and will be the basis for future policy decisions.*

*Thus OTEC will act as a pathfinder in the exploration of a new technology, and more, as a bellwether on how such systems will fare in the domestic and international political, scientific, and engineering scenes.*

## JOE LAGRONE NAMED MANAGER OF DOE'S SAN FRANCISCO OPERATIONS OFFICE

Under-Secretary Dale D. Myers of the Department of Energy has announced the appointment of Joe LaGrone as manager of DOE's San Francisco operations office, through which many OTEC activities are supervised. LaGrone had been serving as acting manager since October 1977, when Robert D. Thorne was nominated by President Carter to be DOE's Assistant Secretary for Energy Technology.

## BUSINESS WEEK PLANS OTEC ARTICLE

TOL learned recently that *Business Week* is doing an article on OTEC. Whether it will be a separate article or a portion of an energy article is not known. However Bob Cohen of DOE was interviewed recently by the *Business Week* reporter. A brief conversation with the reporter, Seth Paine, produced no information regarding when it will appear. As far as TOL knows, Bob was the only individual interviewed thus far.

## STANFORD OCEANS MEETING CANCELED

The three-day Stanford Conference on Oceans, scheduled for August 24-26 in California, was canceled due to low registration. Like the ISES meeting (see article elsewhere in this issue), it had poor attendance due to its unfortunately being scheduled at the peak of America's vacation time.

## DEEP OCEAN CAPABILITIES EXPANDED

The largest pipe-laying barge in the world is undergoing sea trials off Italy. The *Saipem Castoro Sei* will lay pipe in depths down to 2,000 feet—*almost four times deeper than previous technology allowed.* Lessons learned from this and other deep-ocean work will aid OTEC planners in the laying of transmission cables for future OTEC power plants.

## US GOVERNMENT PROCUREMENT INVITATIONS AND CONTRACT AWARDS

**Listed below are procurement invitations and contract awards related to OTEC in particular and ocean resources in general culled from the *Commerce Business Daily*. This is not to be construed, however, as a complete list.**

**Sep 15: Solar Technology Planning and Analysis:** Negotiations are being conducted with the PRC Energy Analysis Company, McLean VA 22101, for Contract EG-77-C-01-4024/A004. The contract specialist is J. Scarpignato.

**Sep 15: Solar Energy Planning and Analysis:** Negotiations are being conducted with The Conservation Foundation, 1717 Massachusetts Ave. NW, Washington DC 20036, for Contract EM-78-X-01-5385. The contract specialist is D. Bowen.

**Sep 15: DOE's Office of Competition** requires technical and analytical support to assist in the assessment and evaluation of the competitive impacts of DOE programs and policies and to analyze the competitive structure of various energy industries. More specifically, to analyze the competitive impacts of DOE decisions in the RD&D patent and technology commercialization area. This procurement is a 100% small-business set-aside. RFP EJ-78-C-01-8591(105) will be available on or about 15 Sep 78. Requests must be in writing. No telephone requests will be honored. (Telecopier No. 202/376-4983) Department of Energy, Office of Procurement Operations, Washington DC 20545.

**Sep 15: Further Research on Mooring Mechanics:** Contract N00014-78-C-0273, 23 Aug 78 (no RFP), for $86,977, awarded to EG&G Washington Analytical Services Center, Inc., 2150 Fields Rd., Rockville MD 20850.

**Sep 15: Detection and Location of Incipient Faults on Power Cables:** Contract ET-78-C-01-3214 (PRDA ET 78-0-01-2867), for $148,000, awarded to Purdue University, Lafayette IN 47907.

● **Sep 15: Ocean Engineering Support and Analysis for the Ocean Thermal Energy Conversion (OTEC) Program:** Contract ET-78-C-02-4931.A000, $580,000, awarded to Value Engineering Co., Alexandria VA 22303.

**Sep 15: Participate in the Planning for Upcoming At-Sea Data-Collection Tests Scheduled for FY 79:** Develop the data-reduction techniques to be used. Contract N00039-78-C-0368, 9 Aug 78, $51,000, awarded to Applied Research Laboratory, University of Texas, PO Box 8029, Austin TX. Naval Electronic Systems Command, Washington DC 20360.

● **Sep 19: Design and Evaluation Services: Energy Systems:** Sector A: Energy Assessment, planning, and policy; resources; utilization; and sociological and institutional development. Sector B: Energy engineering/technology development, implementation, operation, management, and evaluation. Contractors will be permitted to submit proposals in either one or both sectors. RFP AID/RFP/SOD/PDC 50166. Issue date 6 Oct 78. Closing date 6 Nov 78. Six indefinite-quantity contracts (IQCs) will be awarded in open competition, four IQCs are being reserved for small business, and four IQCs are being reserved for minority offerors. Services under work order for short-term assignments on quick-response basis to serve in US and developing countries overseas. RFP may be obtained by written request. M. Snyder, Office of Contract Management, Department of State, Agency for International Development, Washington DC 20523.

**Sep 19: Technical Services in the Areas of Program Alternatives, Development, and Impact Assessment:** Contract ET-78-C-01-2854 (modification of contract), for $253,510, awarded to Mitre Corporation, Metrek Division, McLean VA 22101.

● **Sep 19: Assist in Evaluation of DOE-SAN Pilot Program in Appropriate Energy Technology:** Contract EM-78-C-03-1885, for $40,000, awarded to Booz-Allen Applied Research, 4330 East West Highway, Bethesda MD 20014. Department of Energy, San Francisco Operations Office, 1333 Broadway, Oakland CA 94612.

**Sep 21: General Support of the Systems Development Support Division in Areas of Systems Analysis and Programming:** Negotiations are being conducted with the Systems and Applied Sciences Corporation, Riverdale MD 20840, for Contract EI-78-C-01-6402. P. Braun.

**Sep 25: Study of Data Analysis and Reduction for Upper-Ocean Analysis:** Negotiations are to be conducted with Jaycor Research, Triangle Park NC 27709.

**Sep 25: Development of Ocean Forecasting Models With Emphasis on Air-Sea Interactions:** Negotiations are to be conducted with Science Applications Inc., 6400 Westpark Dr., McLean VA 22101.

**Sep 25: Analysis to Determine the Requirements for the Ocean Survey Program:** Negotiations are to be conducted with Planning Systems Inc., 7900 Westpark Dr., McLean VA 22101.

**Sep 25: Feasibility Study of Establishing a Federal Public Corporation:** Contract ET-78-C-01-3254 (unsolicited proposal), for $28,980, awarded to TPI Associates, Washington DC 20036.

**Sep 25: Effects of Environmental Stress on the Species Composition of Phytoplankton Populations:** Contract EY-76-S-02-2532.A003, for $100,000, awarded to Woods Hole Oceanographic Institution, Woods Hole MA 02543.

**Sep 25: Modification for Follow-On Work for Advancing OTEC Heat-Exchanger Technologies:** Contract EC-76-C-01-2448 (contract modification), for $30,400, awarded to Union Carbide Corp., Tonawanda NY 14160.

**Sep 25: Resource Management and System Support Services for Energy Technology:** Contract ET-78-C-01-3190 (no RFP), for $511,300, awarded to Sterling Systems Inc., Washington DC 20008.

● **Sep 25: Naval Architectural Analyses Related to OTEC-1 Platform:** Modification A002 Contract EY-78-C-03-1830, for $25,000, awarded to Morris Guralnick Associates Inc., 550 Kearney, San Francisco CA 94108. US Department of Energy, 1333 Broadway, Oakland CA 94612.

**Sep 29: Technical Analysis for Environmental Development Planning:** Negotiations are being conducted with Energy and Environmental Analysis Inc., Arlington VA 22209, for Contract EC-77-C-01-2167, Mod A001. The contract specialist is W. Garrity.

**Sep 29: Technical Support for the Preparation of "The National Plan for Accelerated Commercialization of Solar Energy":** Negotiations are being conducted with Mitre Corp., McLean VA 22102, for Contract EM-78-C-01-5147. S. Kaufman. Department of Energy, Office of Procurement Operations, Washington DC 20545.

● **Sep 29: Study of Fouling and Corrosion Problems in a Solar Sea Plant:** Contract EY-76-S-02-4041.A005, for $150,000, awarded to Carnegie-Mellon University, 5000 Forbes Avenue, Pittsburgh PA 15213.

**Sep 29: Evaluation of Hydro-Elastic and Dynamic Behavior of Key Components of the Ocean Turbine System:** Contract ET-78-C-03-2152, $229,977, awarded to AeroVironment Inc., 145 N. Vista Ave., Pasadena CA 91107.

● **Sep 29: Research, Experimentation, and System Studies in Areas of Solar Energy:** Contract EG-77-C-01-3974 (option exercise), for $921,500, awarded to Energy Foundation of Texas, Houston TX 77004.

**Sep 29: Regional Solar Energy Center Planning Support:** Contract EM-78-C-01-5156 (RFP EM-78-R-01-5156), for an estimated $78,000, awarded to Public Technology Inc., Washington DC 20036.

● **Sep 29: Solar Energy Planning, Analysis, and Support:** Contract EG-77-C-01-4024, Mod A002 (option exercise), for $1,938,270, to PRC-Energy Analysis Co., McLean VA 22101.

**Oct 2: Study of a Method to Attenuate Surface Waves Over a Limited Region of the Open Ocean:** Contract N00014-78-C-0740, 12 Sep 78 (no RFP), $79,500, awarded to the Stevens Institute of Technology, Castle Point Station, Hoboken NJ 07030.

**Oct 2: Further Research on Oceanography, Boundary Layer, and Current:** Contract N00014-76-C-0004, 12 Sep 78 (no RFP), $89,400, awarded to the Trustees of Columbia University, Box 20, Low Memorial Library, New York NY 10027.

● **Oct 2: OTEC-1 Early Ocean Test Platform:** Contract ET-78-C-03-1785, for $25,416,626, awarded to Global Marine Development Inc., 4100 Macarthur Blvd., Newport Beach CA 92660.

● **Oct 4: Integration Issues to Realize OTEC Market Potential:** Contract ET-78-C-02-5093.A000, $121,763, awarded to Consultores Tecnicos Asociados, PO Box 1875, Hato Rey, Puerto Rico, 00919.

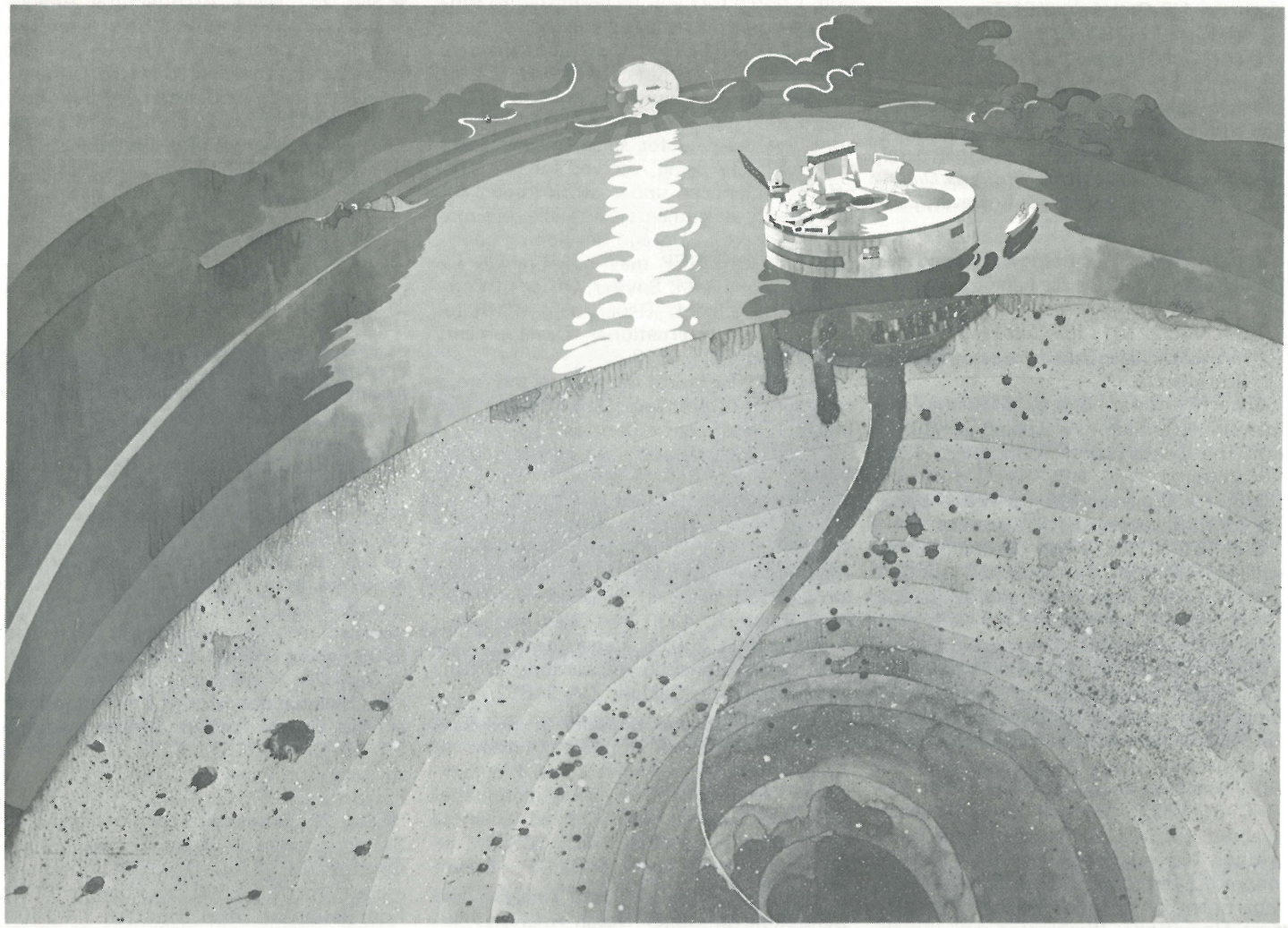


**Above is a reproduction of the full-color 16" x 20" illustration distributed by TRW at Oceans '78 and used in various institutional ads. Provided to TOL gratis by TRW, it is printed on heavy paper and would make a handsome addition to your or your staffs' offices. TOL will forward copies on request when accompanied by check as follows to cover postage, mailing tube, and handling costs: One print $2.50, five prints $6.00, ten prints $10.00, twenty prints $18.00. Please specify one address for mailing of copies.**

## SIXTH ANNUAL OTEC MEETING TO BE HELD IN WASHINGTON JUNE 18TH THROUGH 22ND

A spokesman for the Department of Energy informed TOL on October 5th—just as this issue was going to press—that the Sixth Annual OTEC Conference would be held in Washington DC Monday, June 18th through Thursday, June 22nd. Actually the formal meeting will begin Tuesday morning, but some social and organizational meetings may be held Monday. George Washington University is organizing the meeting, which will be sponsored by DOE, and exhibits will be present for the first time. Further details, including information regarding the presentation of technical papers, will be announced in an early issue of TOL.

Many individuals have been disgruntled, to say the least, at the repeated delays in setting up this meeting, originally planned for November, then for January, and now finalized for June. There is talk of OTECers themselves taking charge of the 1980 conference, with the co-operation of DOE but not under its control. Just how this might be implemented, however, remains to be seen.

**COMING IN OUR NEXT ISSUE: A FULL ILLUSTRATED REPORT ON HAWAII'S "MINI-OTEC": THE FIRST DEMONSTRATION OF SOLAR OCEAN ENERGY/OTEC IN THE SEA NEXT SPRING!**