View metadata, citation and similar papers at core.ac.uk

brought to you by CORE

provided by Purdue E-Pubs

Purdue University
Purdue e-Pubs

International Compressor Engineering Conference | School of Mechanical Engineering

1996

Heat Exchange in the Working Chamber of a Multivane Compressor

Z. Gnutek
Wroclaw Technical University

E. Kalinowski
Wroclaw Technical University

Follow this and additional works at: https://docs.lib.purdue.edu/icec

Gnutek, Z. and Kalinowski, E., "Heat Exchange in the Working Chamber of a Multivane Compressor" (1996). *International Compressor Engineering Conference.* Paper 1161.
https://docs.lib.purdue.edu/icec/1161

This document has been made available through Purdue e-Pubs, a service of the Purdue University Libraries. Please contact epubs@purdue.edu for additional information.
Complete proceedings may be acquired in print and on CD-ROM directly from the Ray W. Herrick Laboratories at https://engineering.purdue.edu/Herrick/Events/orderlit.html

HEAT EXCHANGE IN THE WORKING CHAMBER OF A MULTIVANE COMPRESSOR

GNUTEK Zbigniew, KALINOWSKI Eugeniusz
INSTITUTE OF HEAT ENGINEERING AND FLUID MECHANICS
WROCŁAW TECHNICAL UNIVERSITY, WROCŁAW, POLAND

ABSTRACT

An analysis of heat transfer from the vane compressor's working chamber walls to the gas contained in the working chamber requires that temperature fields within the compressor body (i.e. cylinder), vane and rotor should be known; also the knowledge of the gas/wall surface conductance coefficient is necessary in this case. The temperature fields arise as a result of the vanes rubbing against the rotor and cylinders, the compressor's interactions with the environment and the compression cycle being performed. In the paper, an analysis of the temperature fields is presented. A formula will be derived for the temperature of the cylinder and rotor surface, as well as that of the body. The heat flux absorbed by the gas will also be determined. Finally, a method for the evaluation of an approximate value of the chamber wall/gas heat transfer coefficient will be discussed.

NOMENCLATURE

a_i — thermal diffusivity of i-th material,
$A_{ciw}, A_{ot}, A_w, \ldots$ — contact area of rubbing elements,
b_{ief} — depth of i-th element's heat-absorbing/emitting layer,
c, c_p — specific heat,
e — eccentricity,
F_o — Fourier number,
K_{fe} — fraction of non-thermal component in friction-dissipated energy,
$L_{fo}, L_{fw}, L_{fi}, N_f$ — work and power applied to overcome friction, respectively,
L, L_m, — length of the working chamber and thermal bridge, respectively
m — mass,
$Q, \dot{Q}_f$ — friction heat and heat flux, respectively,
q_f, q_v — surface and volume heat source yield, respectively,
r, R, R_1 — radius of rotor or cylinder,
R_{iz} — thermal resistance of heat transfer through insulation,
R_c — cylinder's reaction to vane,
T, T_v — temperature and „volume" temperature, respectively,
V_w — volume of rotor,
x — a coordinate to measure the distance from a point to the friction surface,
z_1 — number of vanes,
$Z(\varphi)$ — relative cross-section area of the working chamber,
$\alpha_{cot}, \alpha_f, \alpha_w, \alpha_{fi}, \ldots$ — coefficients of heat surface conduction,
α_{rsfi} — coefficient of heat flux separation for i-th body,
λ — angle between two consecutive vanes,
$\lambda_i, \lambda_{iz}, \lambda_m$ — thermal conductivity,
ϑ — temperature increase over an accepted level,
μ_o, ν — vane/cylinder friction coefficient and its respective friction angle,
ξ_i — reduced distance of i-th body's point to friction surface,
ρ_i — density of i-th's body,
$\tau_f, \tau_{ch}, \bar{\tau}$ — duration of friction and cooling processes, and reduced duration, respectively,
τ_N, τ_W — dimensionless indicator of friction power and friction work progress,
φ — angle determining the position of chamber,
ψ_{Vi} — temperature reduction coefficient (overlap coefficient) [4],
ψ — angle of vane axis inclination to rotor radius,
ω — angular velocity.

1. INTRODUCTION

Heat exchange occurring between a medium and the working chamber's walls of a multivane rotary compressor (see Fig. 1) has not yet been sufficiently discussed in literature. Formulae are generally missed that would enable to determine the coefficients of surface heat conduction [7] and temperature of the chamber surface. This is due to the specificity of thermal processes which accompany the compression in vane-type machines. The specificity consists in

- heat sources associated with the friction of vanes against the rotor, cylinder and other component parts, and
- the working chamber surface being relatively well developed.

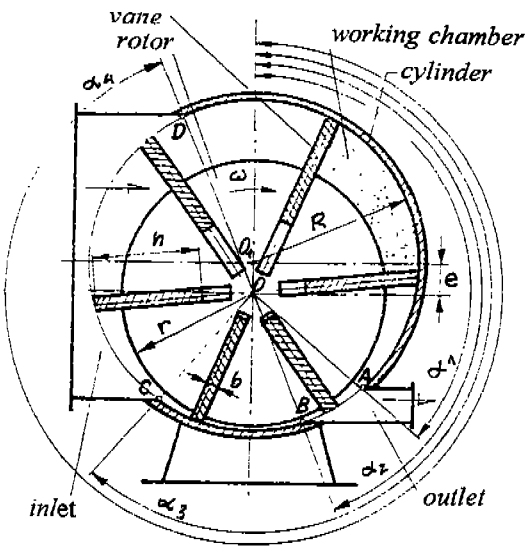

Fig. 1. Layout of a multivane compresssor

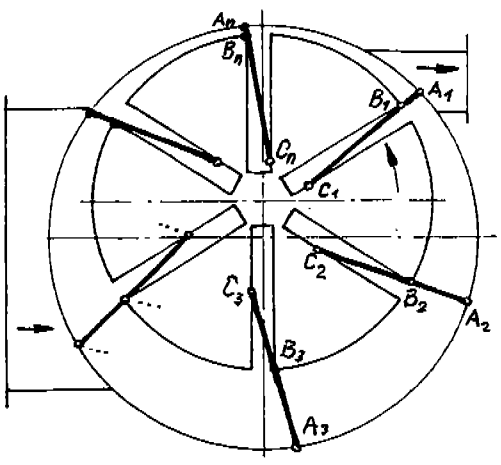

Fig. 2. Distribution of friction heat sources in a multivane compressor

In the paper, an attempt is made to specify those quantities that are necessary to calculate the amount of heat absorbed by the medium from the chamber walls.

2. EFFECT OF FRICTION ON THE TEMPERATURE OF A CYLINDER AND ROTOR

Fig. 2 depicts the distribution of friction heat sources in a multivane compressor.

The yield $\dot{q}_f$ of a surface source of friction heat is given as

$$\dot{q}_f = (1 - K_{fe}) \cdot N_f \cdot \frac{1}{A} \quad [\mathrm{W/m^3}], \tag{1}$$

where N_f - power dissipated to overcome the friction [2, 3].

The essential problems to be solved when analyzing the friction in a multivane compressor include the determination of:

- the distribution of friction-generated heat flux among bodies that participate in the friction,
- temperature fields in friction pairs,
- the temperature of rubbing surfaces.

Fig. 3 shows schematically the main paths of friction heat flow. The heat finds its way to the rubbing solid bodies 1 and 2 and to surrounding gases. According to Čičinadze [4, 5], short duration of contact between the rubbing bodies makes the heat flux absorbed by gas ($\dot{Q}_{f3}$) negligible in a technical analysis of the process, in comparison with conducted fluxes ($\dot{Q}_{f1}$ and $\dot{Q}_{f2}$). Therefore, it will be assumed in the following that the entire amount of friction heat is conducted through solids.

The division of flux $\dot{Q}_f$ into $\dot{Q}_{f1}$ and $\dot{Q}_{f2}$ is given by Hasselgruber and Sharron formulae

$$\frac{\dot{Q}_{f2}}{\dot{Q}_f} = \alpha_{rsf2} = \frac{\sqrt{\lambda_2 \rho_2 c_{p2}}}{\sqrt{\lambda_2 \rho_2 c_{p2}} + \sqrt{\lambda_1 \rho_1 c_{p1}}}. \tag{2}$$

By regarding an individual act of two-body friction as that of two half-infinite media being in contact over the nominal friction area, the temperature distribution along x-axis can be determined from the one-dimensional Fourier equation [4, 6, 7] for the case of transient heat conduction

$$\frac{\partial^2 \vartheta_i}{\partial x^2} = \frac{1}{a_i} \cdot \frac{\partial \vartheta_i}{\partial \tau}, \tag{3}$$

which can be solved for the following boundary conditions

when $x = 0$, then

$$-\lambda_i \frac{\partial \vartheta_i}{\partial x} = \frac{\alpha_{rsfi} \cdot L_{fi} \cdot \tau_{Ni}}{A_{ni} \cdot \tau_f}, \tag{4}$$

when $x = b_{ief}$, then

$$\frac{\partial \vartheta_i}{\partial x} = 0. \tag{5}$$

On allowing that [4]

$$\frac{\partial \vartheta_i}{\partial \tau} = \frac{\alpha_{rsfi} \cdot L_{fi} \cdot \tau_{Ni}}{A_{ni} \cdot \tau \cdot b_{ief} \cdot \rho \cdot c_{pi}}, \tag{6}$$

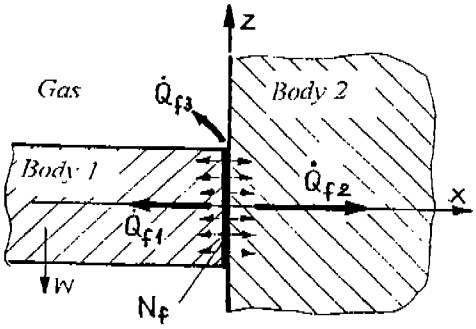

Fig. 3. Division of friction heat flux

Eq. (3) can be expanded as follows

$$\vartheta_i\left(\xi_i, \bar{\tau}\right) = \frac{\alpha_{rsfi} \cdot L_{fi} \cdot b_{ief} \cdot \psi_{Vi}}{\lambda_i \cdot A_{ni} \cdot \tau_f} \cdot \left\{ \left[\frac{1}{3} - \xi_i \left(1 - \frac{\xi_i}{2} \right) \right] \cdot \tau_N + F_o \tau_W - \frac{2\tau_N}{\pi^2} \cdot \Sigma \right\}, \tag{7}$$

where

$$\Sigma = \sum_{n=1}^{\infty} \frac{1}{n^2} \exp\left(-\pi^2 \cdot n^2 \cdot F_{oi} \cdot \bar{\tau}\right) \cos \pi \cdot n \cdot \xi_i. \tag{8}$$

Average temperature T_S at the interface of the rubbing surfaces at the moment τ can be derived from Eq. (7) for $\xi_i = 0$

$$T_S = T_{Vi} + \frac{\alpha_{rsfi} \cdot L_{fi} \cdot b_{ief} \cdot \psi_{Vi}}{\lambda_i \cdot A_{ni} \cdot \tau_f} \cdot \left\{ \frac{1}{3} \cdot \tau_N + F_o \tau_W - \frac{2\tau_N}{\pi^2} \cdot \Sigma \right\}. \tag{9}$$

By following, from the machine start-up, a sequence of consecutive friction acts one can notice that changes in temperature occur not only in the heat-absorbing/emitting layer (from a dozen up to a few hundred micrometers thick), but also in the remaining part of rubbing components of a mass m_{ki}. The latter temperature changing significantly slower, temperature gradients are extremely small, almost approaching zero, and thus the use of an average temperature value for the body's whole volume is justified. In [4], the author calls it a „volume" temperature. Fig. 4 presents variations of temperature at the surface of rubbing parts and their respective „volume" temperature fluctuations generated by multiple, uniformly spaced cycles of friction and cooling.

For the number of cycles n approaching infinity, ϑ' assumes the following value [5]

$$\vartheta''_{oi} = \frac{L_{fi}}{\alpha_f \cdot A_{ki} \cdot \tau_{ch}} \left[\frac{k_{oi} \cdot \tau_{ch}}{\exp(k_{oi} \cdot \tau_{ch}) - 1} \right], \tag{10}$$

where

$$k_{oi} = \frac{\alpha_f \cdot A_{ki}}{m_{ki} \cdot c}. \tag{11}$$

On attaining the machine's steady state, temperature T_{Vi} assumes the value

$$T_{Vi} = T_0 + \vartheta''_{oi}. \tag{12}$$

3. TEMPERATURES ON THE WORKING CHAMBER WALLS IN A ROTARY VANE MACHINE

Due to the heat exchange through its external surface, the cylinder cannot be simply regarded as an half-infinite medium. By allowing for the heat flux exchanged on the cylinder's external surface, the thermal balance equation for the cylinder wall segment between two consecutive vanes can be expressed as follows

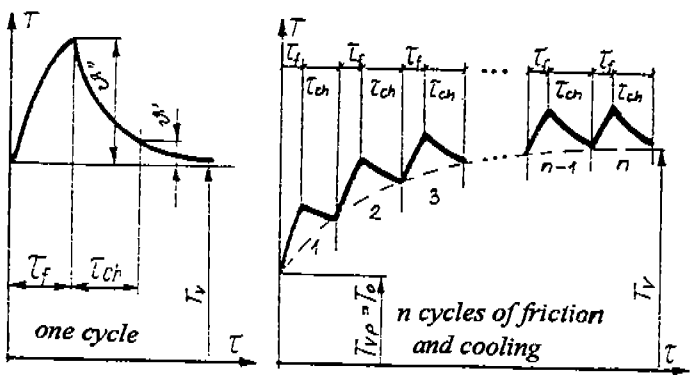

Fig. 4. Variations in the surface and „volume" temperatures during repeated friction-and-cooling cycles

$$\dot{L}_{fc} = \dot{Q}_{cw} + \dot{Q}_{cot} = (T_{srsc} - T)\alpha_{cw} \cdot A_w + (T_{Vc} - T_0)\alpha_{cot} \cdot A_{ot} \cdot \qquad (13)$$

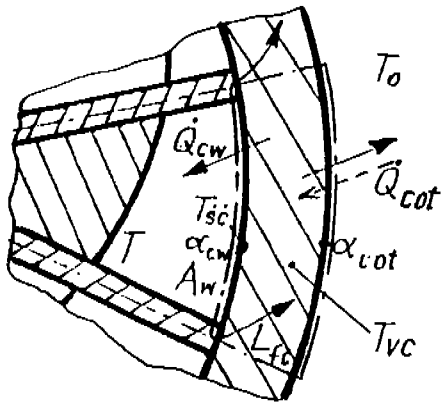

Fig. 5. Thermal balance of the working chamber wall

For the machine's steady state, the temperature of the cylinder's internal wall will fluctuate around the „volume" temperature value. One can therefore assume that $T_{śrść} \approx T_{Vc}$. Such an assumption will make it possible to determine value T_{Vc}, for which Eq. (13) is fulfilled

$$T_{Vc} = \frac{\dot{L}_{fc} + T\alpha_{cw}A_{cw} + T_o\alpha_{cot}A_{cot}}{\alpha_{cw}A_{cw} + a_{cot}A_{cot}}. \qquad (14)$$

As the side covers are connected with the cylinder, their volume temperature T_{Vpb} will approach T_{Vc}. Due to lack of friction against the covers, the temperature of their internal surface will be equal to T_{Vpb}. As a result of heat being introduced from the outside, there is an increase in the volume temperature of the cylinder and side covers. This can be obtained from the equation

$$T_{Vcz} = \frac{T \cdot \alpha_{cw} \cdot A_{cw} + \frac{1}{R_{iz}} \cdot A_{iz} \cdot T_o \cdot L^*_{cf}}{\alpha_{cw} \cdot A_w + \frac{1}{R_{iz}} \cdot A_{iz}}. \qquad (15)$$

For the machine operating in its steady state, practically all the heat produced by the vanes rubbing against the rotor is transferred to a medium in the working chamber. By assuming the rotor to be a cylinder with internal heat sources of yield $q_v = N_{fw} / V_w$, its surface temperature T_{ws} can be calculated from the formula [6]

$$T_{ws} = T + \frac{N_{fw} \cdot r}{2V_w \cdot \alpha_w}. \qquad (16)$$

The temperature value depends on temperature T of the gas in the working chamber; therefore, a number of the wall temperature ranges can be found on the rotor's circumference.

4. EVALUATION OF THE WALL-TO-MEDIUM SURFACE CONDUCTANCE COEFFICIENT

When attempting to evaluate the value of α, the behavior of the gas in the working chamber in the course of the chamber's rotation should be first analyzed (see Fig.6). The entering gas velocity w_{wl} is low; therefore one can assume approximately that the gas contained in the chamber will be accelerated from the standstill up to angular velocity ω. During the acceleration it will perform a relative rotational movement with respect to the chamber walls and thus cause their washing. The medium velocity along the walls $w_{śc}$ can be approximately expressed as

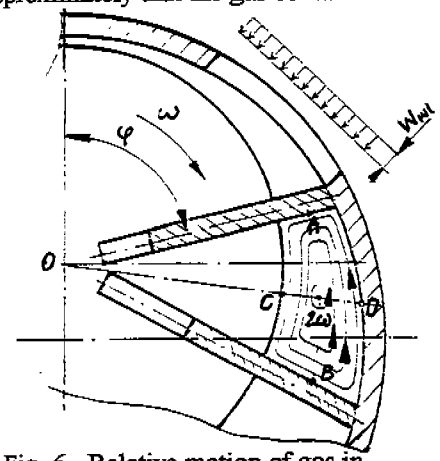

Fig. 6. Relative motion of gas in working chamber

$$w_{sr} \approx 2 \cdot \omega \cdot r_{sr} \approx (AB + CD) \cdot \frac{1}{2} \cdot \omega, \qquad (17)$$

where: AB — length of the arc as determined from the formula

$$AB = \frac{2\pi}{z}\left\{r + \frac{1}{2}\left[x\left(\phi + \frac{1}{2}\lambda\right)\right]\right\}, \qquad (18)$$

$CD = x\left(\varphi + \frac{1}{2}\lambda\right)$ — length of segment x for the vane's positional angle equal to $\varphi + \frac{\pi}{z_l}$.

Evaluation of coefficient α can be done based on known relationships for Nusselt number Nu for the convective heat exchange in the forced flow over flat surfaces [6]. For the laminary boundary layer (i.e. when $Re_l < 10^5$)

$$Nu_{lp} = 0{,}66 \cdot Re_{lp}^{\ 0{,}5} \cdot Pr_p^{\ 0{,}33} \cdot \varepsilon_T \,. \tag{19}$$

For the turbulent boundary layer

$$Nu_{lp} = 0{,}037 \cdot Re_{lp}^{\ 0{,}8} \cdot Pr_p^{\ 0{,}43} \cdot \left(\frac{Pr_p}{Pr_s}\right)^{0{,}25} \,. \tag{20}$$

In the above formulae

$Re_{lp} = \frac{w_{sc} \cdot l}{\nu}$ —Reynolds number, as determined for a plate of length l and for physical properties of the liquid in its actual temperature; length l represents the working chamber circumference,

$Pr_p = \frac{\eta \cdot c_p}{\lambda}$ —Prandtl number, as determined for the liquid's actual temperature as well,

Pr_s —Prandtl number, as determined for the gas temperature equal to that of the wall,

ε_T —multiplier that allows for the change in physical and chemical properties of the liquid, separate for the cooling of the plate and for the heating, and

$w_{śc}$ —average gas velocity in the vicinity of the wall, evaluated above.

5. HEAT EXCHANGE BETWEEN A MEDIUM AND THE WORKING CHAMBER WALLS

The amount of heat absorbed from the chamber walls, which controls the medium process type, can be obtained from the formulae given above. The heat exchange that occurs between the gas and this part of the cylinder surface which forms the chamber wall, can be described by the relation

$$dQ_c = \frac{\alpha_{cw}}{\omega}(T_{Vc} - T)R_1 L\left\{\lambda - 2\frac{e}{R_1}\cos\left(\frac{2\varphi+\lambda}{2}\right)\sin\frac{\lambda}{2} + 2\frac{e}{R_1}tg\psi\sin\frac{2\varphi+\lambda}{2}\sin\frac{\lambda}{2} + \right.$$
$$\left. -\mathrm{tg}\psi\left[\sqrt{1-\left(\frac{e}{R_1}\right)^2\sin^2\varphi} - \sqrt{1-\left(\frac{e}{R_1}\right)^2\sin^2(\varphi+\lambda)}\right]\right\}d\varphi \tag{21}$$

An infinitesimal amount of heat absorbed from the vanes is expressed as

$$dQ_l = \alpha_{rsfl} \cdot R_c \cdot \mu_c \cdot \cos\nu \cdot \rho(\varphi_s)d\varphi \,, \tag{22}$$

where $\rho(\varphi_s)$ — radius vector of the vane/cylinder contact point.

The following amount of heat is delivered to the chamber by the side covers

$$dQ_p = \frac{2\alpha_p}{\omega}(T_{Vc} - T)R^2 \cdot Z(\varphi)d\varphi \,. \tag{23}$$

An infinitesimal amount of heat absorbed from the rotor can be obtained from the equation

$$dQ_w = \frac{\pi \cdot q_v \cdot r^2 \cdot L}{\omega \cdot z_l}d\varphi \,. \tag{24}$$

As a result of rotation from φ_1 to φ_2, the working medium receives heat $Q_{\pi 1\text{-}2}$ from the chamber walls

$$Q_{\pi 1\text{-}2} = \int_{\varphi_1}^{\varphi_2}\left(\frac{\pi \cdot q_v \cdot r^2 \cdot L}{\omega \cdot z_l} + \frac{\alpha_{cw}}{\omega}(T_{Vc} - T)R_1 \cdot L \cdot \left\{\lambda - 2\frac{e}{R_1}\cos\left(\frac{2\phi+\lambda}{2}\right)\sin\frac{\lambda}{2} + 2\frac{e}{R_1}tg\psi\sin\left(\frac{2\alpha+\lambda}{2}\right)\sin\frac{\lambda}{2} + \right.\right.$$
$$\left.\left. -\mathrm{tg}\left[\sqrt{1-\left(\frac{e}{R_1}\right)^2\sin^2\varphi} - \sqrt{1-\left(\frac{e}{R_1}\right)^2\sin^2(\varphi+\lambda)}\right]\right\} + \alpha_{rsfl} \cdot R_c \cdot \mu_c \cdot \cos\nu \cdot \rho(\varphi_s) + \frac{2\alpha_p}{\omega}(T_{Vc} - T)R^2 \cdot Z(\varphi)\right)d\varphi \tag{25}$$

6. CONCLUSIONS

The presented method of calculating the heat fluxes in a rotary vane machine constitutes an attempt at the description of phenomena which occur in the machine's working chamber. This forms a basis for a more precise presentation of the behavior of a medium being pumped.

The mathematical model discussed above, although simplified by its very nature, is adequate enough to reflect thermodynamic processes that occur in the working medium. Possibilities are thus provided for the more accurate designing of rotary vane machines.

7. REFERENCES

1. Z. Lawrowski, *Tribologia*, PWN, Warsaw 1993 (in Polish).
2. Z. Gnutek, *Analysis of the mechanical friction process in rotary machines*, in the Proceedings of the 1st Symposium „Energetical problems in mechanics", Bielsko-Biała 1987, pp. 53-60 (in Polish).
3. Z. Gnutek, *Analysis of thermodynamic processes in rotary vane machines*. Part 3: *Mechanical friction and internal leaks in vane machines*, Report of Wrocław TU no I-20 SPR 31/91 Wrocław 1991, (not published, in Polish).
4. A.V. Čičinadze, E.D. Braun, A.G. Ginsburg, Z.V. Ignatieva, *Calculation, testing and matching of friction pairs*, Nauka, Moscow 1979, (in Russian).
5. A.V. Čičinadze, *Calculation and investigation of internal friction in breaking*, Nauka, Moscow 1967 (in Russian).
6. E. Kalinowski, *Heat transfer and exchangers*, Editors of Wrocław TU, Wrocław 1995 (in Polish).
7. S. Wiśniewski, T.S. Wiśniewski, *Heat exchange*, WNT Warsaw 1994 (in Polish).
8. S.K. Pathy, *Heat transfer model of a rotary compressor*, Proc. 1992 International Compressor Engineering Conference at Purdue. Vol IV p. 1405, West Lafayette, Indiana, USA 1992.