MIRJournal
Microbiology Independent Research Journal

RESEARCH PAPER
DOI: 10.18527/2500-2236-2021-8-1-27-37

# Evidence for the extracellular delivery of influenza NS1 protein

**Anastasia A. Pulkina**[1, 2, #], **Maria V. Sergeeva**[1, 2], **Artem Krokhin**[1], **Marina A. Stukova**[1], **Andrej Egorov**[1]

[1] Smorodintsev Research Institute of Influenza, 15/17, Prof. Popov str., Saint Petersburg, 197376, Russia
[2] Peter the Great St. Petersburg Polytechnic University, 29, Polytechnicheskaya str., Saint Petersburg, 195251, Russia

## ABSTRACT

We constructed a reporter influenza A/Puerto Rico/8/1934 virus expressing truncated 124aa N-terminal NS1 protein fused to a luciferase reporter sequence (NanoLuc) without signal peptide. The reproduction activity of the vector correlated well with the luminescent activity in the lysates of infected cell cultures or mouse respiratory organ suspensions. Surprisingly, we found that luciferase enzymatic activity was present not only in the intracellular compartments but also in cell culture supernatants as well as in the sera or bronchiolar lavages of infected mice. This fact allowed us to formulate a working hypothesis about the extracellular delivery mechanism of the NS1 protein. To test this idea, we conducted co-transfection experiments in Vero cells with different combinations of plasmids encoding influenza genomic segments and chimeric NS1-NanoLuc encoding plasmid. We found that the emergence of the luciferase reporter in the extracellular compartment was promoted by the formation of the ribonucleoprotein complex (RNP) from the co-transfection of plasmids expressing PB1, PB2, PA, and NP proteins. Therefore, influenza NS1 protein may be delivered to the extracellular compartment together with the nascent RNP complexes during the maturation of virus particles.

**Keywords:** influenza virus, nonstructural protein, luciferase, ribonucleoprotein complex

[#]**For correspondence**: Anastasia Pulkina, Smorodintsev Research Institute of Influenza, 15/17, Prof. Popov str., Saint Petersburg, 197376, Russia, e-mail: pulkina.a@yandex.ru

**Citation**: Pulkina AA, Sergeeva MV, Krokhin A, Stukova MA, Egorov A. Evidence for extracellular delivery of influenza NS1 protein. MIR J 2021; 8(1), 27-37. doi: 10.18527/2500-2236-2021-8-1-27-37.

**Received:** April 22, 2021

**Accepted:** June 1, 2021

**Published:** July 2, 2021

**Copyright:** © 2021 Pulkina. This is an open access article distributed under the terms of the Creative Commons Attribution-NonCommercial-ShareAlike 4.0 International Public License (CC BYNC-SA), which permits the unrestricted use, distribution, and reproduction in any medium, as long as the material is not used for commercial purposes, provided that the original author and source are cited.

**Acknowledgements**: This work was supported by a Grant provided by the Government of St. Petersburg for undergraduate and graduate students (No. 124 of 9/25/2018).

**Conflict of interest:** The authors have no commercial or financial interests.

## INTRODUCTION

Influenza viruses belong to the family of the *Orthomyxoviridae*. Viruses of this family have a segmented, single-stranded, negative-sense RNA genome. The influenza virus genome comprises eight segments encoding up to 17 proteins and polypeptides [1].

The envelope of the influenza A virion is formed by a lipid membrane derived from the host cell. Two glycoproteins hemagglutinin (HA) and neuraminidase (NA) are embedded into a lipid bilayer. HA mediates virus attachment and entry; NA helps virions to release from the infected cell [2]. HA defines the virus subtype and is a target for neutralizing antibodies [3]. In addition, the viral membrane incorporates the M2 transmembrane protein that forms ion channels. The inner surface of the virion envelope is formed by the M1 matrix protein [4]. The core of the virions is made up of the ribonucleoprotein complex (RNP), consisting of viral RNA segments (vRNA) coated with nucleoprotein (NP) and associated with RNA polymerase complex, which includes the polymerase basic protein 1 (PB1), polymerase basic protein 2 (PB2), and polymerase acidic protein (PA) [5, 6]. Non-structural protein-1 (NS1), nuclear export protein (NS2/NEP) and the third protein (NS3) are synthesized from the eighth genome segment. [7]. Among non-structural proteins, the NS1 protein plays the most significant role due to its

ability to bind to RNA species and to antagonize the innate immune system [8, 9].

The infection is initiated by HA attachment to sialic acid receptors of the host cell followed by the endocytosis, fusion, and release of the viral RNP into the cytosol [4]. The RNP is imported into the nucleus by interacting with the host cell factors importin α/β1. In the nucleoplasm, the complex of RNP and importin dissociates [5, 10]. In the nucleus, negative-sense vRNAs are transcribed into mRNAs (incomplete complementary copies of vRNAs that are capped and polyadenylated) and cRNAs (full-length, positive-sense copies of the vRNAs). Both processes are carried out by heterotrimeric viral RNA-dependent RNA polymerase. The primary transcription of viral mRNAs are carried out by a polymerase complex entering the nucleus as a part of the RNP [10]. The mRNAs are transported into the cytoplasm where the synthesis of viral proteins is initiated on cytosolic ribosomes (PB1, PB2, PA, NP, NS1, NEP, and M1) or ribosomes associated with the endoplasmic reticulum (membrane proteins HA, NA, and M2) [5]. Then, viral proteins are transported to the nucleus (PB2, PB1, PA, NP, M1, and NEP) or to the plasma membrane (HA, NA, and M2). For cRNAs and vRNAs transcription, newly synthesized polymerase proteins PB2, PB1, PA are used. Nascent vRNAs are packed by NP protein and combined with the polymerase complex to form new RNPs [11].

The vRNP nuclear export is carried out by NEP/NS2 and M1 proteins and is mediated by the CRM1 receptor that recognizes the nuclear export signal (NES). There are several hypotheses about the role of M1: 1) M1 mediates interaction between vRNP and factor CRM1 association; 2) M1 is required for the release of vRNP from chromatin; 3) M1 prevents the reimportation of vRNP into the nucleus [10]. One model of vRNP nuclear export suggests that M1 acts as an adapter protein between vRNP and NS2 that interacts with CRM1 directly. According to another model, NS2 simultaneously interacts with M1, the PB1 subunit of the vRNP complex, and CRM1 [10]. NP protein can also mediate the nuclear export of vRNP through direct interaction with CRM1 [12].

After leaving the nucleus, vRNPs accumulate near the microtubule-organizing center and are transported to the plasma membrane by interaction with Rab11 protein [10, 13]. The budding of a viral particle occurs in lipid rafts on the apical surface of the plasma membrane. HA and NA proteins are localized in the raft while M2 accumulates at the borders of budding domains [2]. The vRNPs are moving to the budding site due to interaction with M1, which binds to the cytoplasmic tails of HA and NA [14]. The release of the virus from the plasma membrane is mediated by M2, promoting viral scission, and NA, thereby preventing the virus aggregating on the plasma membrane [5].

The role of NS1 protein in the formation of RNPs or virus particles is poorly understood. It was shown that NS1 can be found in virions affecting the efficiency of genome packaging into the virion [15]. The facilitation of genome packaging may occur due to NS1 interaction with vRNA [16] thereby indicating the involvement of NS1 protein into the formation of RNP complex. The RNA binding domain is located at the N-terminus of the NS1 protein [17]. Since NS1 protein can interact with the RNP complex [18], it is possible to assume that both of them may be delivered to the cell surface in association. Indirect confirmation of this hypothesis is the detection of anti-NS1 antibodies in sera from humans with laboratory-confirmed influenza [19]. In addition, it was demonstrated that nonstructural antigens are detected on the surfaces of the cells infected with influenza A virus [20].

To confirm the hypothesis of NS1 transport to the cell surface, we constructed the A/Puerto Rico/8/1934 (A/PR/8/1934) influenza virus vector A/PR8-NS124-Luc expressing chimeric NS1 protein fused with luciferase reporter sequence (NanoLuc) without a signal peptide, which replaces the C-terminal part of NS1 [21]. Using this vector, we detected the presence of the chimeric NS1 protein in the extracellular compartments of infected cells and in the bronchoalveolar lavage (BAL) and serum of mice. Moreover, we showed that this process is mediated most likely by the interaction of NS1 with the RNP complex.

## MATERIALS AND METHODS

### Cells

African green monkey kidney Vero cells (ATCC #CCL-81) were adapted for growth in OptiPro serum-free medium (Gibco, USA) supplemented with 2% GlutaMax (Gibco, USA) and used for virus cultivation, titration, and plasmid transfection. For a transfection experiment, 10% fetal bovine serum (FBS) (Gibco, USA) was added to the culture medium. Human lung carcinoma cells A549 (ATCC #CCL-185) were cultured in DMEM/F12 medium (Gibco, USA) containing 10% FBS. Madin-Darby Canine Kidney (MDCK) cells (IRR, #FR-58) were cultured in α-MEM medium (Biolot, Russia) containing 10% FBS.

### Plasmids

The plasmids encoding eight gene segments of the influenza A/PR/8/1934 (H1N1) virus: PB2, PB1, PA, HA, NP, NA, M, and a modified NS gene were constructed based on the analog of the pHW2000 vector for reverse genetics

[22]. The N-terminal half of NS1 (amino acids 1-124) was fused with the heterologous sequence encoding the NanoLuc protein through glycine linker. The sequence encoding the NEP protein with a splice site remained unchanged. Nucleotide sequence of NanoLuc protein was optimized by modifying the codon frequency and GC content.

### Laboratory animals

BALB/c mice were obtained from the Biomedical Science Center (Stolbovaya, Russia). All of the experiments were conducted according to the guidelines for care and work with laboratory animals [23] and were approved by the local bioethics committee of the Smorodintsev Research Institute of Influenza.

### Recombinant virus rescue and determination of the virus infectious activity in vitro

To obtain the recombinant influenza A/PR8-NS124-Luc (H1N1) virus strain, Vero cells were transfected with eight bidirectional plasmids based on the pHW2000 vector encoding the gene segments PB2, PB1, PA, NP, M, HA, NA, and the modified NS of A/PR/8/1934 (H1N1) influenza virus. The method was described in detail previously [24]. The development of infection was determined by the virus cytopathic effect and by the hemagglutination reaction of the culture medium with a 0.5% suspension of chicken erythrocytes. Viruses were propagated in developing chicken embryos (CEs).

The infectious activity of the recombinant influenza A/PR8-NS124-Luc (H1N1) virus was determined in Vero and MDCK cell cultures, and in the CEs. Tenfold dilutions of viral material were prepared in culture medium or DPBS and inoculated into cell culture wells or allantoic cavity of the CEs, respectively. Cells were incubated at 37°C, 5% $CO_2$ for 72 h, and the CEs were incubated at 34°C for 48 h. Infectious activity was calculated according to the method of Reed and Muench [25] and expressed in decimal logarithms of the 50% embryonic infectious dose ($EID_{50}$) or tissue culture infectious dose ($TCID_{50}$).

To control the genetic stability of the heterologous insert in the virus NS gene segment, the real-time PCR (RT-PCR) was performed. Viral RNA was isolated using the RNEasy Mini Kit (Qiagen, USA). For reverse transcription, the universal Uni12 primer [26] (Beagle, Russia) was used. The amplification of the fragment of the chimeric NS gene was performed using special primers and AgPath-ID OneStep RT-PCR Reagents (Ambion, Thermo Scientific, USA). Electrophoresis in agarose gel and the ChemiDoc documentation system (Bio-Rad, USA) were used to analyze the results of RT-PCR.

### Immunofluorescence assay for studying the NS1 protein expression

For immunofluorescence staining, Vero cells were infected with the A/PR/8/1934, A/PR8-NS124, and A/PR8-NS124-Luc viruses at a multiplicity of infection (MOI) of 1.0 $TCID_{50}$/cell. Twenty hours after infection, the cells were examined for NS antigen by indirect immunofluorescence. The staining procedure was carried out in three different ways. In the first set of experiments, cells were washed twice with PBS, fixed with 4% paraformaldehyde (Sigma, Germany) in PBS for 15 min at room temperature (RT), and permeabilized with 0.2% Triton X-100 (Amresco, USA) in PBS for 15 min at RT. Then, the cells were incubated with 5% milk (DITOL, Russia) in PBS with the addition of 0.1% Tween-20 (Serva, EU) overnight at 4°C to block the nonspecific binding of the antibodies. The solution of primary mouse monoclonal antibody 1A11 against NS1 protein [27] was diluted 1:500 in blocking buffer and incubated with cells overnight at 4°C. The solution of fluorescent labeled Goat Anti-Mouse IgG Alexa Fluor® 488 antibodies (ab150113, Abcam, UK) diluted 1:300 in blocking buffer were used as secondary antibodies. Staining was performed for one hour at RT. The second immunofluorescence assay method differs from the first method in that it does not contain a permeabilization stage. In the third method used for the staining of cells, no detergents were used. Twenty hours after infection, the cells were washed twice with culture medium, incubated for an hour with monoclonal antibodies 1A11 (dilution 1:500) at 37°C, washed twice with culture medium again, and incubated for 1 h with the same fluorescent labeled conjugate (dilution 1:300) at 37°C. Before microscopy, the cells were washed four times. Fluorescence microscopy pictures were obtained using the AXIO Vert A.1 microscope system with AxioCam ICc5 (Zeiss, Germany).

### Determination of the reporter influenza virus luciferase activity in vitro

Vero and A549 cells were used to study the luminescent activity of the reporter virus during the first hours of infection. Monolayer cells were washed twice with DPBS before adding the viral inoculum. The virus was added to cells at MOI of 0.005 and incubated for 1 h at 37°C and 5% $CO_2$. Then, the cells were washed, fresh medium was added, and the incubation continued. Measurements of luciferase activity were performed at 1, 3, 6, 9, 12, and 24 h after the medium change. The supernatant was separated from cells, cells were washed with DPBS and frozen. Luciferase activity was measured in dark-wall plates using Nano-Glo Luciferase Assay System (Promega, USA) and CLARIOstar multi-photometer (BMG LABTECH, Germany).

### Measurement of luciferase activity and virus replication during infection in mice

BALB/c mice were intranasally (i.n.) infected with 6 $logTCID_{50}$/mouse of the A/PR8-NS124-Luc and A/PR8-NS124 recombinant viruses. The control group was infected with A/PR8-NS124 virus obtained from the Virus Collection of the Vector Vaccines Laboratory of the Smorodintsev Research Institute of Influenza. At 12, 24, and 48 h after infection, four mice from each group were sacrificed. Bronchoalveolar lavage (BAL), lung and serum samples were collected. Lungs were homogenized and tested for the viral load. BAL was tested for viral titer and luciferase activity. Sera were tested for luciferase activity and for the presence of viral RNA.

The viral load in mouse organ suspensions was determined by $TCID_{50}$ assay using MDCK cells. To measure the luciferase activity, lung homogenates were mixed 1:1 with the reaction mix from the Nano-Glo Luciferase Assay System in a black 96-well plate. Influenza virus RNA in the serum of infected mice was determined by RT-PCR. RNA was isolated using the RNEasy Mini Kit. RT-PCR was performed using the Ag-Path One Step RT-PCR reagent kit and Human Influenza Virus RT-PCR Detection and Characterization Panel (CDC, Atlanta) primers and probes.

### Cell transfection with plasmids encoding the proteins of influenza A

Vero cells were grown in OptiPro serum-free medium supplemented with 2% GlutaMax and 10% FBS. Cells were electroporated with different combinations of bidirectional pHW2000-based plasmids encoding A/PR/8/1934 influenza virus gene segments and modified NS gene segment with NanoLuc reporter insert. After transfection, the same medium and supplement were used. In the first set of experiments, the cells were incubated for 6 h after transfection, washed with DPBS, and then incubated for another 18 h. In the second set of experiments, the cells were incubated during 24 h after transfection, washed with DPBS, and then incubated for another 5 h. Supernatants and cell lysates were harvested for the luciferase activity measurement as described hereinabove. The results from the experiments reflect the luciferase activity of the protein accumulated in the cell supernatant over 18 h and 5 h, respectively.

### Statistical analysis

Data analyses were performed using GraphPad Prism 9.0.0 (GraphPad Software, USA). The experimental and control groups were compared using the one-way or two-way ANOVA tests with Bonferroni or Dunnett's post hoc test; the level of significance was assumed to be at $p<0.05$.

## RESULTS

### Construction and growth characteristic of the luciferase reporter vector

We generated the A/PR8-NS124-Luc reporter influenza A vector expressing a NanoLuc luciferase protein sequence fused to the N-terminal part of NS1 protein in the backbone of A/PR/8/1934 (H1N1) virus. The NanoLuc was chosen as a reporter gene due to its small size and the ability to generate brighter luminescence than

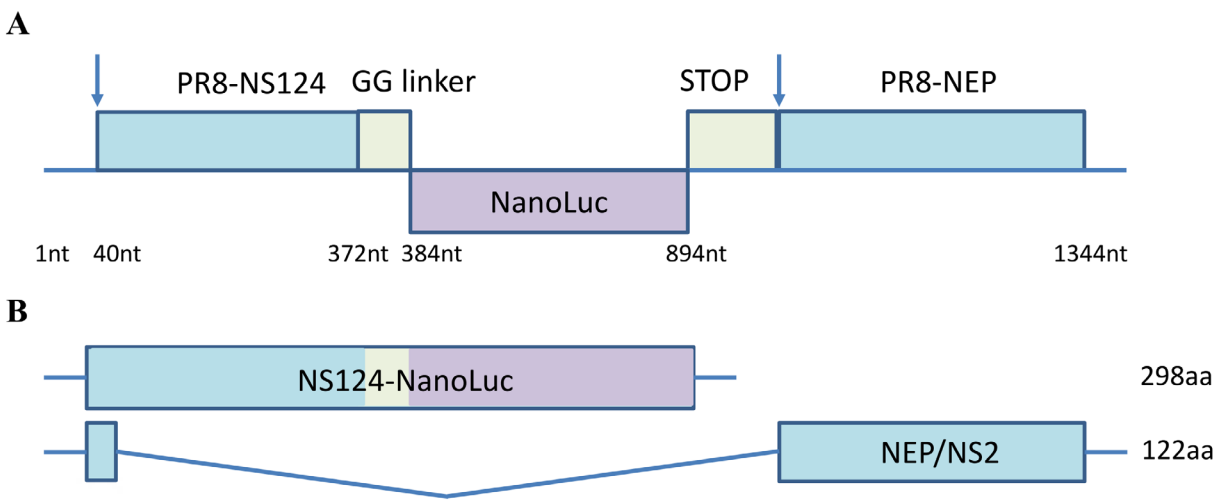


**Fig. 1.** Schematic representation of the modified NS genomic segment of A/PR8-NS124-Luc virus. (A) The structure of the NS genomic segment; (B) the structure of mRNA products encoding truncated NS1 protein fused to the luciferase sequence and NEP protein resulted from the natural splicing.

Firefly or Renilla luciferase [21]. The nucleotide sequence coding for NanoLuc was modified by optimizing the GC content down to 40% corresponding to influenza A virus sequences. It is important to mention that the NanoLuc sequence did not include any secretory signals for the extracellular delivery of the transgene. The gene and protein maps are shown in Fig. 1.

Luciferase influenza vector A/PR8-NS124-Luc (H1N1) was obtained by reverse genetics as described previously [22]. The reporter vector was further amplified in Vero cells and CEs. The obtained recombinant virus was characterized by high reproductive activity in CEs (8.3±0.3 $\log_{10}$ $EID_{50}$/ml), Vero cells (7.6±0.6 $\log_{10}$ $TCID_{50}$/ml), and MDCK cells (7.7±0.4 $\log_{10}$ $TCID_{50}$/ml). The genetic stability of the A/PR8-NS124-Luc vector was confirmed after 4 passages in Vero cells or CEs (data not shown).

### Emergence of luciferase signal in the cell culture supernatants

The expression of NanoLuc protein was assessed in Vero and A549 cells infected with A/PR8-NS124-Luc (H1N1) virus at a MOI of 0.005. The luciferase activity was measured in the culture supernatants and in cell lysates during 24 h after infection. The results are shown in Fig. 2.

Surprisingly, the bioluminescent signal was detected not only in cell lysates but also in the supernatants of the infected Vero cells already at 6 h post infection, gradually increasing for over 24 h (Fig. 2A). In A549 cells, the luciferase expression kinetics was slower than in Vero cells. Nevertheless, the extracellular presence of the luciferase reporter was also observed in the supernatants of A549 at 9 h post infection (Fig. 2B). The extracellular delivery of the luciferase reporter was most likely not associated with the virus mediated cell destruction. Zhirnov et al. previously showed that apoptosis in Vero cells infected with influenza virus is delayed [28]. In addition, the dose of the virus was too low to destroy cells within several hours. Moreover, the cells were also protected by the 10% FBS present in the cell culture medium. Therefore, we were able to demonstrate that the N-terminal part of the NS1 protein was transported outside of the infected cells in association with the linked luciferase reporter.

### Detection of NS1 protein inside the cell and on its surface

Next, we evaluated the expression of NS1 protein in infected cells by immunofluorescence staining. To confirm that the localization of the NS1-reporter complex is not associated with the impaired function of truncated NS1 protein, we performed an immunofluorescence study with both the reporter virus and wild type (*wt)* virus. Vero cells were infected with A/PR/8/1934, A/PR8-NS124, and A/PR8-NS124-Luc viruses at MOI of 1. The immunofluorescence staining was performed 20 h after infection using anti-NS1 mouse monoclonal antibody 1A11 [27]. In order to distinguish between the intracellular and surface expression of NS1 protein, the immunofluorescence staining was done with and without cell permeabilization. We detected NS1 protein not only in permeabilized cells, but also on the surface of the non-permeabilized cells. The results are shown in Fig. 3.

To exclude the possibility of membrane damage by Tween 20, immunofluorescence staining was performed in living cells without any detergents. Therefore, we detected NS1 antigen not only in permeabilized cells but

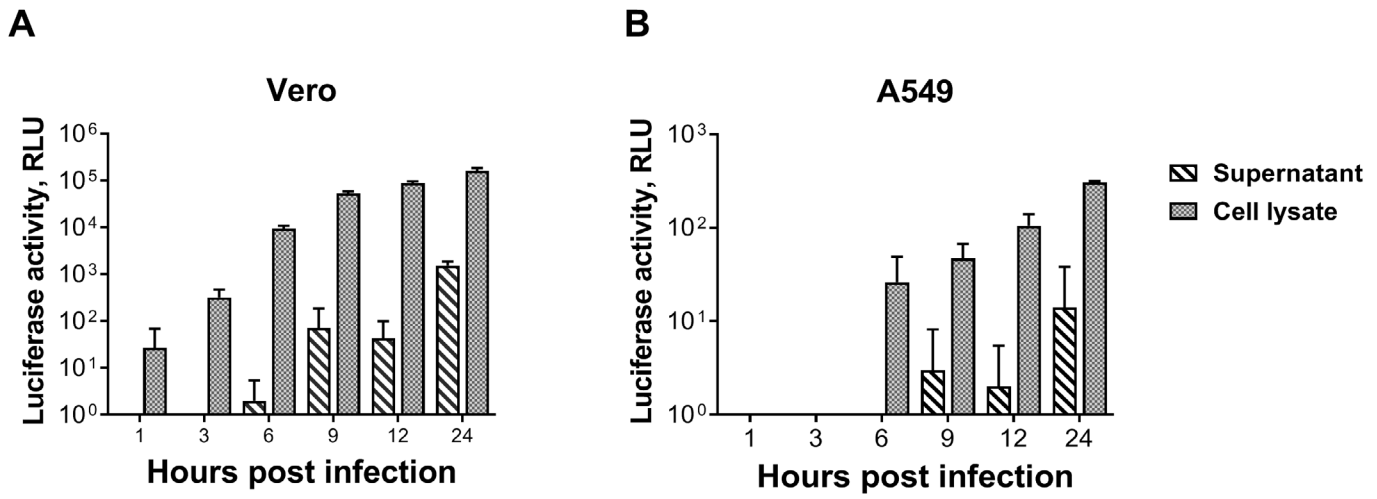


**Fig. 2.** NanoLuc expression in the culture supernatants and cell lysates of infected Vero (A) and A549 (B) cells. Cells were infected with A/PR8-NS124-Luc (H1N1) virus at a MOI of 0.005 and incubated at 37°C for 24 h. The supernatants and the cell lysates were frozen at the indicated time points and later examined for luciferase activity. The data of the most representative experiments for Vero and A549 cells (from set of two) are presented. Each experiment contained three biological replicates.

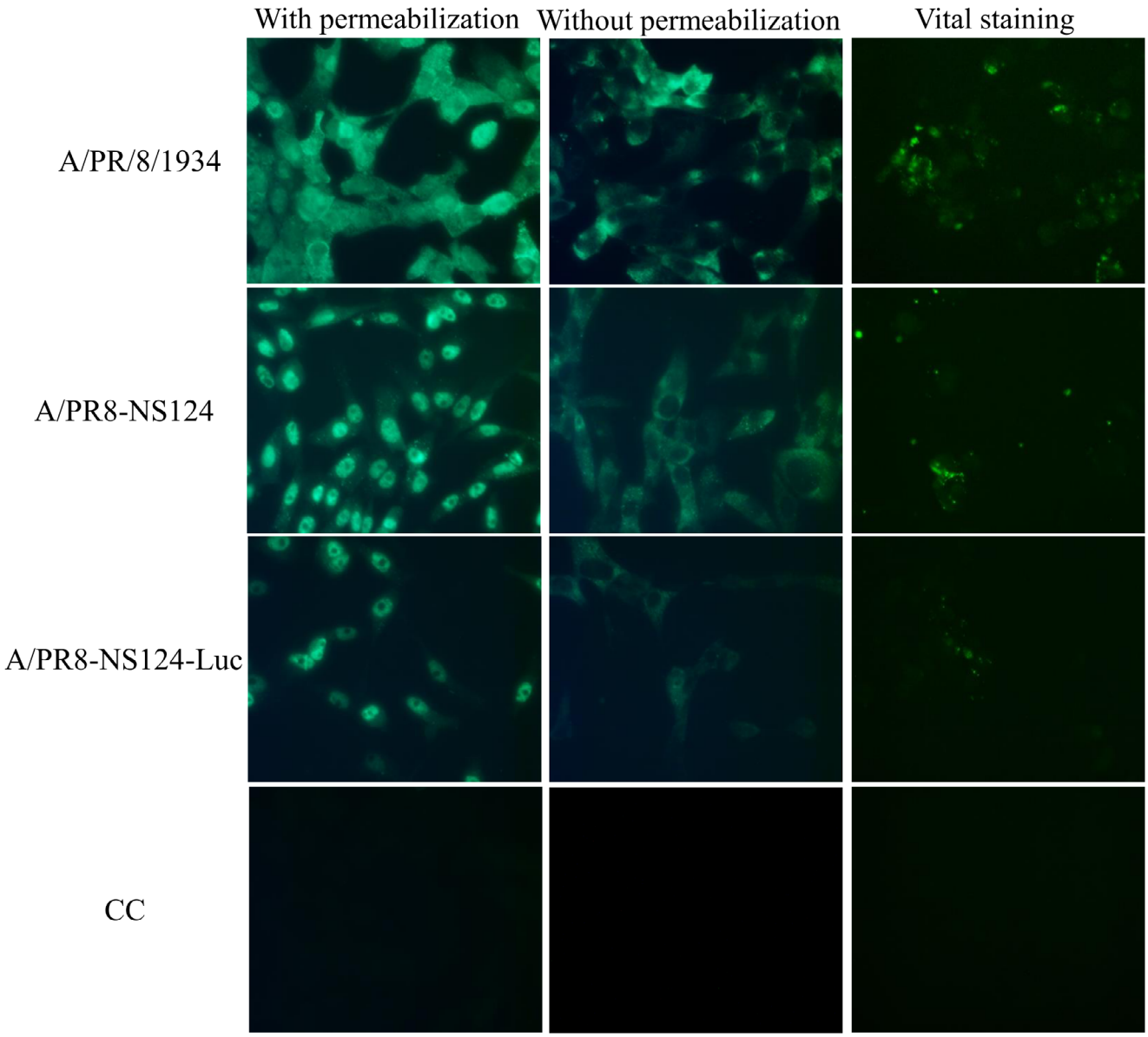


**Fig. 3.** NS1 protein expression in Vero cells infected with the A/PR/8/1934, A/PR/8-NS124, and A/PR/8-NS124-Luc viruses. CC stands for cell control. Cells were infected at MOI of 1, incubated for 20 h, and then washed, fixed, and permeabilized (left column) or not permeabilized (middle column); or exposed to *in vivo* staining (right column). NS1 protein was visualized with 1A11 anti-NS1 monoclonal antibody and subsequent staining with secondary antibody labeled with the green fluorescent dye Alexa Fluor 488. Images were taken with a Zeiss AXIO Vert A.1 fluorescent microscope.

also on the surface of the non-permeabilized cells and living cells. This was observed for all of the tested viruses, including the A/PR/8/1934 virus encoding a fully functional NS1 protein.

### Presence of the luciferase activity in serum and BAL of infected mice

To assess the viral replication and reporter gene expression *in vivo,* we infected mice intranasally with 6.0 $\log_{10}TCID_{50}$/mouse of the recombinant A/PR8/NS124-Luc virus. The PR8-NS124 virus (empty vector) was used as a control. At 12, 24, and 48 h post infection serum, BAL and lungs were collected for analysis. The viral load in the lung homogenates and BAL was estimated by titration in MDCK cells. Luciferase activity was assessed in BAL and serum. We also checked the presence of viral RNA in serum using RT-PCR. The results are shown in Fig. 4.

We found that the A/PR8-NS124-Luc reporter vector and the A/PR8-NS124 empty vector replicate almost equally in mouse lungs. We were able to detect a high luminescent signal in the BAL already at 12 h after infection with a slight increase at 48 h after infection. In addition, we detected the luciferase activity in serum at 12, 24, and 48 h after infection. No luciferase activity was detected in serum and in BAL of mice infected with A/PR8-NS124. To exclude the possibility of viremia with virions contaminated with NanoLuc, the RT-PCR test was performed for serum samples. For the mice infected with

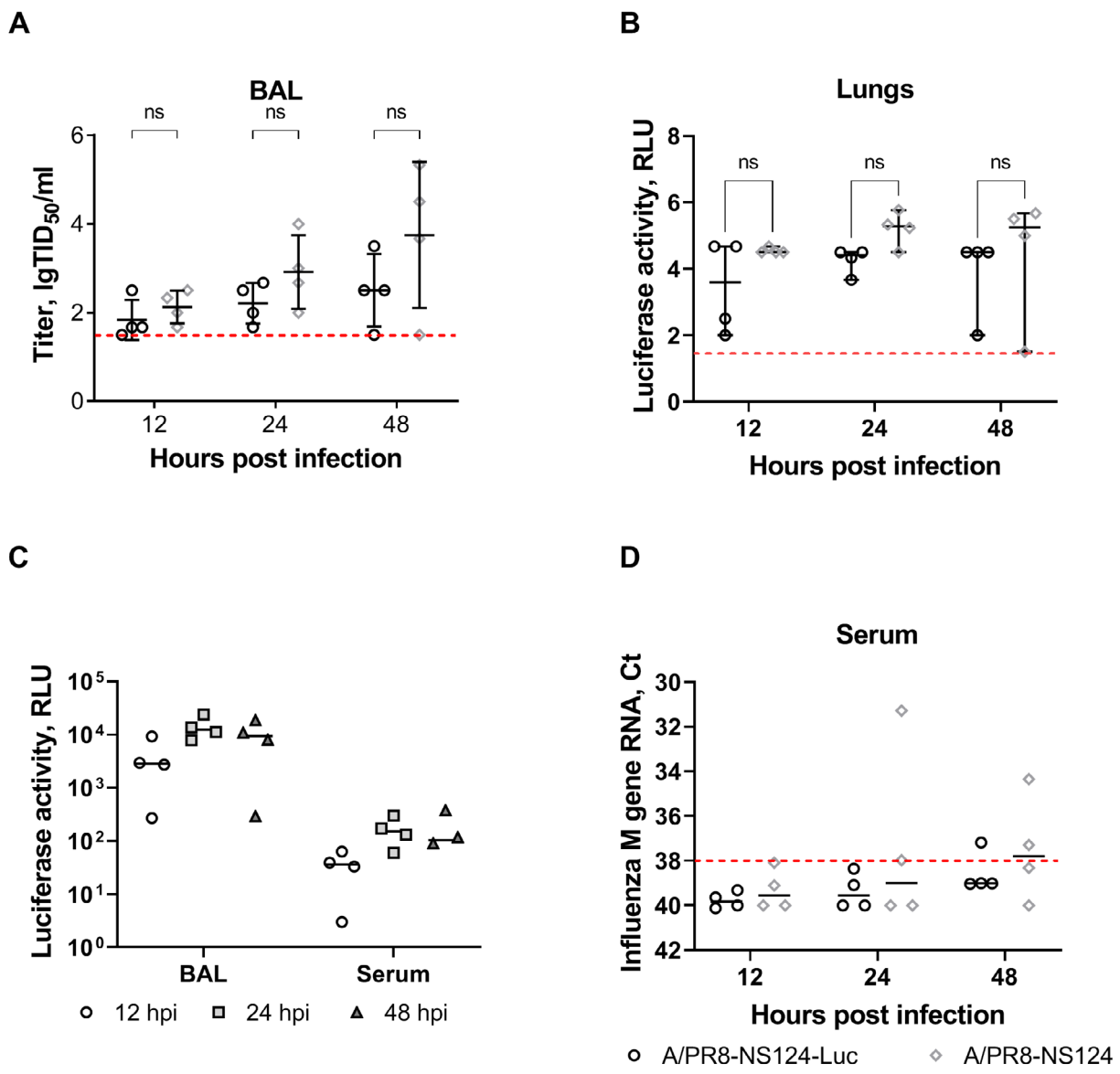


**Fig. 4.** Presence of the virus and luciferase reporter in the tissues of infected mice. BALB/c mice were infected i.n. with the A/PR8-NS124-Luc and A/PR8-NS124 recombinant viruses. Mouse BAL, serum, and lung samples collected at indicated time points. Viral load was measured in BAL (A) and lungs homogenates (B). Black circles and gray diamonds represent individual values for each mouse infected with the A/PR8-NS124-Luc and A/PR8-NS124, respectively. The red line indicates the limit of detection. Difference between groups was analyzed by two-way ANOVA with Bonferroni post hoc test; (ns) stands for not statistically significant. Luciferase activity was measured in BAL and serum (C). The data are presented only for mice infected with A/PR8/NS124-Luc virus. The luciferase signal in serum and BAL of mice challenged with the PR8-NS124 vector was lower than the detection limit (data not shown). Serum was tested for the presence of influenza virus RNA (D). All of the samples with Ct values above the dotted red line ($Ct_{max}$=38) are considered positive for influenza A virus. Group designations are similar to those described hereinabove.

the A/PR8/NS124-Luc vector, the viral RNA was only detected in one animal at 48 h post infection, while a luciferase signal was detected in all of the infected mice. Therefore, the emergence of the NS-Luc chimeric protein in the serum was not associated with the budding of virus particles into the bloodstream of infected mice.

### Formation of the RNP complex is essential for extracellular transport of NS1-NanoLuc chimeric protein

We hypothesized that NanoLuc reporter protein fused to truncated NS1 protein may be delivered to the extracellular compartment due to the interaction of NS1 with the nascent RNPs and their transportation to the cell surface. To confirm this hypothesis, we performed transfection experiments in Vero cells using different combinations of plasmids expressing influenza A virus proteins together with the plasmid encoding chimeric NS1-NanoLuc reporter. It should be mentioned here that these plasmids contained both PolI and PolII promoters and, therefore, the genomic RNA products were also synthesized in the transfected cells along with the proteins [22].

We found that the extracellular accumulation of NanoLuc reporter in the supernatant of cells during 18 h

was detectable for all of the combinations of plasmids used for transfection (Fig. 5A). However, the cells transfected with the NS-Luc encoding plasmid accompanied with PB2, PB1, PA, and NP expressing plasmids (full RNP) demonstrated 100 times higher extracellular enzymatic activity in comparison to cells transfected with just only NS-Luc plasmid or its combination with the separate components of RNP (NS-Luc+NP; NS-Luc+POL (PB2, PB1, PA)). The addition of an M genomic segment encoding plasmid did not improve the extracellular transport of the reporter in comparison to NS-Luc+NP+POL transfection.

Next, we performed a transfection experiment in order to measure the effect of extracellular delivery of NanoLuc reporter at the late time point after transfection. Transfected cells were incubated for 24 h, washed with fresh medium and incubated for another 5 h before the assessment of the luciferase activity in the culture supernatants (Fig. 5B). After transfection with only NS-Luc plasmid, no signal was detected. However, the

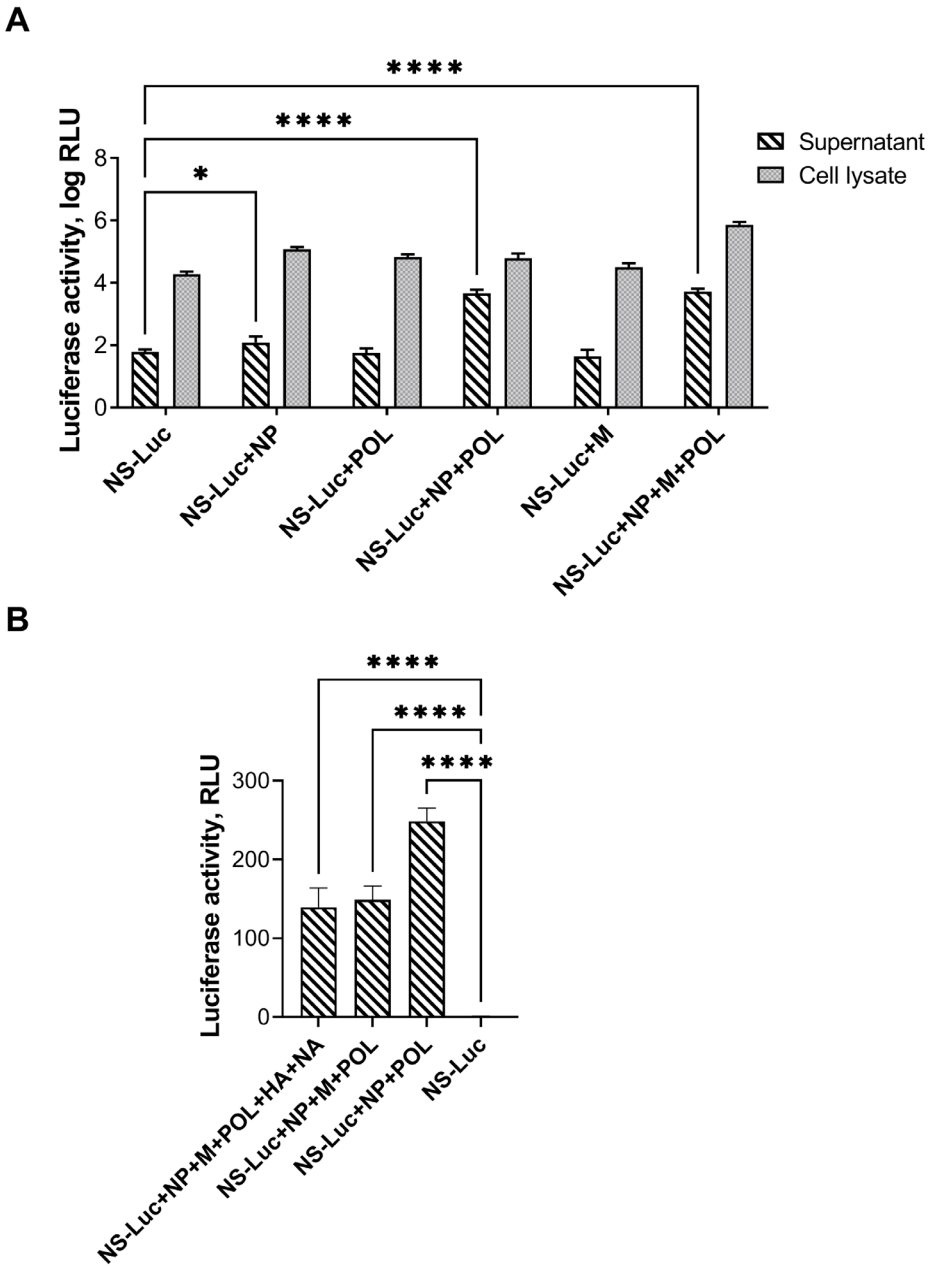


**Fig. 5.** Extracellular delivery of the truncated NS1 protein linked to luciferase reporter transgene. The luciferase activity was measured in the supernatant and the cell lysate at 24 h post transfection (A). Striped and gray bars represent the values of luciferase activity in the supernatant and cell lysate, respectively. The difference between groups was analyzed using two-way ANOVA with Dunnett's post hoc test; (*) indicates $p<0.05$, (****) indicates $p<0.0001$. The extracellular accumulation of NS-Luc protein in the supernatant of transfected cells during 5 h of the late period after transfection (B). The difference between groups was analyzed using one-way ANOVA with Dunnett's post hoc test; (****) indicates $p<0.0001$. The results of the most representative experiment (from set of 5) are presented; for each measurement, three biological replicates were used.

co-expression of proteins representing the RNP had a dramatic effect on the extracellular transport of the NS1 linked luciferase reporter. Interestingly, in this case, the co-expression of a complete set of plasmids representing the entire genome of the influenza virus or a genome without the HA and NA gene segments reduced the luciferase signal in the supernatant. This may be explained by the competition of the gene segments for polymerase binding during replication. It was shown that the insertion of foreign protein negatively affects the competitiveness of the NS segment [29].

Overall, our results demonstrate that influenza NS1 protein truncated at its N-terminal half and linked to luciferase reporter can be delivered outside of infected cells presumably in association with the RNP of influenza virus. This leads to the emergence of an NS1 linked reporter in the supernatant of infected cells as well as in the serum and in the BAL of infected mice. The mechanism of the NS1 interaction with the RNP complex via NS1-RNA association or NS1 binding to RNP proteins remains to be elucidated.

## DISCUSSION

We have constructed an influenza luciferase reporter vector A/PR8/NS124-Luc based on the A/PR/8/1934 influenza virus. The NanoLuc protein sequence was fused to the N-terminal 124 aa of the NS1 protein. The obtained vector was characterized by genetic stability and high reproduction activity *in vitro* (Vero and A549 cells) and *in vivo* (mouse lungs). Although, the infection of mice with A/PR8/NS124-Luc vector was not lethal in contrast to the infection with *wt* A/PR/8/1934 virus (data not shown), the level of its replication in the lungs was similar to that of A/PR8-NS124 virus carrying an identical NS1 gene without transgene. The RNA binding domain located in the N-terminal part of NS1 protein is responsible for the viral resistance to interferons (IFNs) of type I that deplete the viral RNA species as pathogen-associated molecular patterns [9]. Since A/PR8-NS124-Luc vector was able to replicate in IFN competent A549 cells and in mice, it can be concluded that the RNA binding domain function was not impaired by the attachment of the luciferase reporter sequence. The luciferase enzymatic activity was also not impaired by fusing to the truncated NS1 protein.

The high sensitivity of the luminescence detection method allowed us to find the NS1-Luc chimeric protein in the supernatant of infected Vero cells as early as 6 h after infection with very low MOI (0.005). Under these conditions, it is very unlikely that the extracellular appearance of the NS1-Luc protein was due to the apoptotic cell death or the cellular membrane damage. Previously, Zhirnov et al. demonstrated that the onset of apoptosis in influenza virus infected Vero cells is delayed compared to IFN competent cell lines starting at 35 h after infection with much higher MOI (from 2 to 4) [28]. Therefore, we assume that luciferase activity in the medium was the result of NS1 protein transportation to the cell surface. Our results do not contradict the data obtained by other researchers. The expression of the full length NS1 protein of A/WSN/1933 (H1N1) influenza virus on the cell surface was previously described [20]. It is also known that the natural influenza infection in animals [30, 31] or people [19] may result in the formation of NS1 specific antibodies indicating the presentation of this antigen to B-lymphocytes in the extracellular compartment. The formation of antibodies to NS1 protein may serve as indirect evidence of its release from the infected cells.

Similar to *in vitro* experiments, we were able to detect a luciferase signal in the biological fluids of infected mice as early as 12 h after infection. The luciferase activity was detected in the BAL and serum of infected mice at least for 48 h reflecting the reproduction curve of the virus in the lungs. Viral RNA was detected in the blood of only one animal at 48 h after infection. This means that NS1-Luc recombinant protein did not enter biological fluids as a part of the progeny virions, but was delivered separately or was the result of the cell lysis due to the activity of natural killer (NK) cells or other cytotoxic cell subsets. It also cannot be completely excluded that the measurement of the luciferase activity provides higher sensitivity compared to a RT-PCR test. In any case, we were able to demonstrate that the NS1 protein linked luciferase transgene appears in the extracellular compartments of infected animals. How long this effect lasts and whether the luciferase activity may be detected outside of the virus replication period remains to be investigated.

The mechanism of the NS1 protein release from infected cells is not clearly described yet. It has been demonstrated that NS1 protein may interact with RNP. Robb et al. [18] suggested that this interaction is possible through protein-protein interaction with nucleoprotein. However, they do not deny the possibility of the direct interaction of NS1 with RNA. We put forward a hypothesis about the export of the NS1 protein through interaction with the RNP complex. Previously, it was shown that the NP/RNP complex interacts with cytoskeletal filaments [10] for transport to the budding site.

The performed transfection experiments in Vero cells with plasmids encoding influenza virus proteins and RNAs demonstrated that the release of NS1 protein from cells is at least 100 times more intensive when transfection is performed with plasmids encoding full RNP complex. At the same time, we did not detect such dramatic

differences in NS1 protein content in cell lysates. This suggests that the formation of an RNP complex is necessary for the export of NS1 protein fused to reporter transgene from a cell. Our results are consistent with those obtained previously [18] and suggest the interaction of the NS1 protein with the RNP complex. However, the interaction of the NS1 protein with the components of the polymerase complex requires further study and the mechanism of NS1 release is also unclear.

The extracellular release of the influenza NS1 protein can be of practical importance. Influenza NS vectors have been created in order to generate the immune response toward proteins coded by sequences inserted into the NS1 open reading frame [32, 33, 34]. Since abundantly produced NS1 protein predominantly has cytosolic localization, these vectors are especially good for triggering a T-cell immune response. Our current data demonstrate that priming the B-cell response may also happen when a transgene is linked to the N-terminal part of NS1, which allows the delivery of the transgene to the cell surface *in vitro* and to the serum and BAL *in vivo*. Therefore, influenza NS vectors are capable of inducing an antibody response to the transgene, especially in case of prime-boost immunizations in mice with vaccine viruses belonging to different influenza A subtypes [35]. However, the data obtained in a mouse model must be proven in large animals or in clinical trials performed with influenza NS vectors.

## REFERENCES


1. Yamayoshi S, Watanabe M, Goto H, Kawaoka Y. Identification of a Novel Viral Protein Expressed from the PB2 Segment of Influenza A Virus. J Virol 2015; 90(1), 444-56. doi: 10.1128/JVI.02175-15.
2. Nayak DP, Balogun RA, Yamada H, Zhou ZH, Barman S. Influenza virus morphogenesis and budding. Virus Res 2009; 143(2), 147-61. doi: 10.1016/j.virusres.2009.05.010.
3. Krammer F, Smith GJD, Fouchier RAM, Peiris M, Kedzierska K, Doherty PC, et al. Influenza. Nat Rev Dis Primers 2018; 4(1), 3. doi: 10.1038/s41572-018-0002-y.
4. Samji T. Influenza A: understanding the viral life cycle. Yale J Biol Med. 2009; 82(4), 153-9. PMID: 20027280; PMCID: PMC2794490.
5. Dou D, Revol R, Östbye H, Wang H, Daniels R. Influenza A Virus Cell Entry, Replication, Virion Assembly and Movement. Front Immunol 2018; 9, 1581. doi: 10.3389/fimmu.2018.01581.
6. Te Velthuis AJ, Fodor E. Influenza virus RNA polymerase: insights into the mechanisms of viral RNA synthesis. Nat Rev Microbiol 2016; 14(8), 479-93. doi: 10.1038/nrmicro.2016.87.
7. Selman M, Dankar SK, Forbes NE, Jia JJ, Brown EG. Adaptive mutation in influenza A virus non-structural gene is linked to host switching and induces a novel protein by alternative splicing. Emerg Microbes Infect 2012; 1(11), e42. doi: 10.1038/emi.2012.38.
8. Egorov A, Brandt S, Sereinig S, Romanova J, Ferko B, Katinger D, et al. Transfectant influenza A viruses with long deletions in the NS1 protein grow efficiently in Vero cells. J Virol 1998; 72(8), 6437-41. doi: 10.1128/JVI.72.8.6437-6441.1998.
9. García-Sastre A, Egorov A, Matassov D, Brandt S, Levy DE, Durbin JE, et al. Influenza A virus lacking the NS1 gene replicates in interferon-deficient systems. Virology 1998; 252(2), 324-30. doi: 10.1006/viro.1998.9508.
10. Eisfeld AJ, Neumann G, Kawaoka Y. At the centre: influenza A virus ribonucleoproteins. Nat Rev Microbiol 2015; 13(1), 28-41. doi: 10.1038/nrmicro3367.
11. Zheng W, Tao YJ. Structure and assembly of the influenza A virus ribonucleoprotein complex. FEBS Lett 2013; 587(8), 1206-14. doi: 10.1016/j.febslet.2013.02.048.
12. Chutiwitoonchai N, Mano T, Kakisaka M, Sato H, Kondoh Y, Osada H, et al. Inhibition of CRM1-mediated nuclear export of influenza A nucleoprotein and nuclear export protein as a novel target for antiviral drug development. Virology 2017; 507, 32-9. doi: 10.1016/j.virol.2017.04.001.
13. de Castro Martin IF, Fournier G, Sachse M, Pizarro-Cerda J, Risco C, Naffakh N. Influenza virus genome reaches the plasma membrane via a modified endoplasmic reticulum and Rab11-dependent vesicles. Nat Commun 2017; 8(1), 1396. doi: 10.1038/s41467-017-01557-6.
14. Ali A, Avalos RT, Ponimaskin E, Nayak DP. Influenza virus assembly: effect of influenza virus glycoproteins on the membrane association of M1 protein. J Virol 2000; 74(18), 8709-19. doi: 10.1128/jvi.74.18.8709-8719.2000.
15. Hutchinson EC, Charles PD, Hester SS, Thomas B, Trudgian D, Martínez-Alonso M, Fodor E. Conserved and host-specific features of influenza virion architecture. Nat Commun 2014; 5, 4816. doi: 10.1038/ncomms5816. Erratum in: Nat Commun 2015; 6, 6446. doi: 10.1038/ncomms7446.
16. Sha TW, Weber M, Kasumba DM, Noda T, Nakano M, Kato H, Fujita T. Influenza A virus NS1 optimises virus infectivity by enhancing genome packaging in

a dsRNA-binding dependent manner. Virol J 2020; 17(1), 107. doi: 10.1186/s12985-020-01357-3.
17. Krug RM. Functions of the influenza A virus NS1 protein in antiviral defense. Curr Opin Virol 2015; 12, 1-6. doi: 10.1016/j.coviro.2015.01.007.
18. Robb NC, Chase G, Bier K, Vreede FT, Shaw PC, Naffakh N, et al. The influenza A virus NS1 protein interacts with the nucleoprotein of viral ribonucleoprotein complexes. J Virol 2011; 85(10), 5228-31. doi: 10.1128/JVI.02562-10.
19. Robertson AH, Mahic M, Savic M, Tunheim G, Hungnes O, Trogstad L, et al. Detection of anti-NS1 antibodies after pandemic influenza exposure: Evaluation of a serological method for distinguishing H1N1pdm09 infected from vaccinated cases. Influenza Other Respir Viruses 2020; 14(3), 294-301. doi: 10.1111/irv.12712.
20. Shaw MW, Lamon EW, Compans RW. Surface expression of a nonstructural antigen on influenza A virus-infected cells. Infect Immun 1981; 34(3), 1065-7. doi: 10.1128/IAI.34.3.1065-1067.1981.
21. Hall MP, Unch J, Binkowski BF, Valley MP, Butler BL, Wood MG, et al. Engineered luciferase reporter from a deep sea shrimp utilizing a novel imidazopyrazinone substrate. ACS Chem Biol 2012; 7(11), 1848-57. doi: 10.1021/cb3002478.
22. Hoffmann E, Webster RG. Unidirectional RNA polymerase I-polymerase II transcription system for the generation of influenza A virus from eight plasmids. J Gen Virol 2000; 81(Pt 12), 2843-47. doi: 10.1099/0022-1317-81-12-2843.
23. Guide for the care and use of laboratory animals. National Research Council, Washington, DC: National Academy Press; 2010.
24. Hoffmann E, Neumann G, Hobom G, Webster RG, Kawaoka Y. "Ambisense" approach for the generation of influenza A virus: vRNA and mRNA synthesis from one template. Virology 2000; 267(2), 310-7. doi: 10.1006/viro.1999.0140.
25. Reed LJ, Muench H. A simple method of estimating fifty per cent endpoints. Am J Epidemiol 1938; 27(3), 493-7. doi: 10.1093/oxfordjournals.aje.a118408.
26. Zhou B, Donnelly ME, Scholes DT, St George K, Hatta M, Kawaoka Y, Wentworth DE. Single-reaction genomic amplification accelerates sequencing and vaccine production for classical and Swine origin human influenza a viruses. J Virol 2009; 83(19), 10309-13. doi: 10.1128/JVI.01109-09.
27. Krivitskaya VZ, Sorokin EV, Tsareva TR, Sergeeva MV, Kadyrova RA, Romanovskaya-Roman'ko EA, et al. Obtaining and Characteristics of Monoclonal Antibody Panel Specific to NS1 Protein of A Flu Virus. Biotechnology 2017, 33(5), 61-72. doi: 10.21519/0234-2758-2017-33-5-61-72 (In Russian).
28. Zhirnov OP, Konakova TE, Wolff T, Klenk HD. NS1 protein of influenza A virus down-regulates apoptosis. J Virol 2002; 76(4), 1617-25. doi: 10.1128/jvi.76.4.1617-1625.2002.
29. Zhao X, Wang L, Cui Q, Li P, Wang Y, Zhang Y, et al. A Mechanism Underlying Attenuation of Recombinant Influenza A Viruses Carrying Reporter Genes. Viruses 2018; 10(12), 679. doi: 10.3390/v10120679.
30. Avellaneda G, Mundt E, Lee CW, Jadhao S, Suarez DL. Differentiation of infected and vaccinated animals (DIVA) using the NS1 protein of avian influenza virus. Avian Dis 2010; 54(1 Suppl), 278-86. doi: 10.1637/8644-020409-Reg.1.
31. Ozaki H, Sugiura T, Sugita S, Imagawa H, Kida H. Detection of antibodies to the nonstructural protein (NS1) of influenza A virus allows distinction between vaccinated and infected horses. Vet Microbiol 2001; 82(2), 111-9. doi: 10.1016/s0378-1135(01)00366-2.
32. Sereinig S, Stukova M, Zabolotnyh N, Ferko B, Kittel C, Romanova J, et al. Influenza virus NS vectors expressing the mycobacterium tuberculosis ESAT-6 protein induce CD4+ Th1 immune response and protect animals against tuberculosis challenge. Clin Vaccine Immunol 2006; 13(8), 898-904. doi: 10.1128/CVI.00056-06.
33. Kittel C, Ferko B, Kurz M, Voglauer R, Sereinig S, Romanova J, et al. Generation of an influenza A virus vector expressing biologically active human interleukin-2 from the NS gene segment. J Virol 2005; 79(16), 10672-7. doi: 10.1128/JVI.79.16.10672-10677.2005.
34. Stukova MA, Sereinig S, Zabolotnyh NV, Ferko B, Kittel C, Romanova J, et al. Vaccine potential of influenza vectors expressing Mycobacterium tuberculosis ESAT-6 protein. Tuberculosis (Edinb) 2006; 86(3-4), 236-46. doi: 10.1016/j.tube.2006.01.010.
35. Ferko B, Stasakova J, Sereinig S, Romanova J, Katinger D, Niebler B, et al. Hyperattenuated recombinant influenza A virus nonstructural-protein-encoding vectors induce human immunodeficiency virus type 1 Nef-specific systemic and mucosal immune responses in mice. J Virol 2001; 75(19), 8899-908. doi: 10.1128/JVI.75.19.8899-8908.2001.