UNIVERSITY OF ILLINOIS BULLETIN

ISSUED WEEKLY

Vol. XXXIII September 17, 1935 No. 3

[Entered as second-class matter December 11, 1912, at the post office at Urbana, Illinois, under the Act of August 24, 1912. Acceptance for mailing at the special rate of postage provided for in section 1103, Act of October 3, 1917, authorized July 31, 1918.]

OSCILLATIONS DUE TO CORONA DISCHARGES ON WIRES SUBJECTED TO ALTERNATING POTENTIALS

BY

J. TYKOCINSKI TYKOCINER

RAYMOND E. TARPLEY

AND

ELLERY B. PAINE

BULLETIN No. 278

ENGINEERING EXPERIMENT STATION

PUBLISHED BY THE UNIVERSITY OF ILLINOIS, URBANA

PRICE: SIXTY CENTS

THE Engineering Experiment Station was established by act of the Board of Trustees of the University of Illinois on December 8, 1903. It is the purpose of the Station to conduct investigations and make studies of importance to the engineering, manufacturing, railway, mining, and other industrial interests of the State.

The management of the Engineering Experiment Station is vested in an Executive Staff composed of the Director and his Assistant, the Heads of the several Departments in the College of Engineering, and the Professor of Industrial Chemistry. This Staff is responsible for the establishment of general policies governing the work of the Station, including the approval of material for publication. All members of the teaching staff of the College are encouraged to engage in scientific research, either directly or in coöperation with the Research Corps, composed of full-time research assistants, research graduate assistants, and special investigators.

To render the results of its scientific investigations available to the public, the Engineering Experiment Station publishes and distributes a series of bulletins. Occasionally it publishes circulars of timely interest, presenting information of importance, compiled from various sources which may not readily be accessible to the clientele of the Station, and reprints of articles appearing in the technical press written by members of the staff.

The volume and number at the top of the front cover page are merely arbitrary numbers and refer to the general publications of the University. *Either above the title or below the seal* is given the number of the Engineering Experiment Station bulletin, circular, or reprint which should be used in referring to these publications.

For copies of publications or for other information address

THE ENGINEERING EXPERIMENT STATION,
UNIVERSITY OF ILLINOIS,
URBANA, ILLINOIS

UNIVERSITY OF ILLINOIS
ENGINEERING EXPERIMENT STATION

BULLETIN NO. 278 SEPTEMBER, 1935

OSCILLATIONS DUE TO CORONA DISCHARGES ON WIRES SUBJECTED TO ALTERNATING POTENTIALS

BY

J. TYKOCINSKI TYKOCINER
RESEARCH PROFESSOR OF ELECTRICAL ENGINEERING

RAYMOND E. TARPLEY
RESEARCH GRADUATE ASSISTANT IN ELECTRICAL ENGINEERING

AND

ELLERY B. PAINE
PROFESSOR OF ELECTRICAL ENGINEERING

ENGINEERING EXPERIMENT STATION
PUBLISHED BY THE UNIVERSITY OF ILLINOIS, URBANA

4000—6-35—7922

UNIVERSITY
OF ILLINOIS
:: PRESS ::

TABLE OF CONTENTS

CONTENTS—(CONCLUDED)

LIST OF FIGURES

LIST OF TABLES

This page is intentionally blank.

OSCILLATIONS DUE TO CORONA DISCHARGES ON WIRES* SUBJECTED TO ALTERNATING POTENTIALS

I. Introduction

1. *Oscillations in Cables Subjected to Alternating Potentials.*—Oscillations due to corona discharges have been applied extensively for the detection of ionization in cables. The results of an investigation on this subject have been published in two bulletins, Nos. 259 and 260 of the Engineering Experiment Station of the University of Illinois. Integral values of oscillatory currents were measured in connection with such cable tests.

It was found generally that these oscillatory currents set in with ionization. They started in cables at certain values of applied alternating potentials characteristic for each kind of cable and increased in intensity with applied voltage. The wave form of the oscillations was studied both by electro-mechanical and cathode-ray oscillographs. The oscillograms showed very complex trains of waves, superimposed on the charging current and distributed within definite regions of the applied 60-cycle voltage waves. Each 60-cycle half wave differed in wave form, but generally all positive half waves showed a similar, although not identical, character, which also differed considerably from that of the wave forms on the negative half waves which, however, taken as a group, resembled each other. Similar wave forms were obtained by applying high potentials to paper or mica condensers. Air condensers, transformers, and wires when overstrained also gave rise to such oscillations.

2. *Difficulties Encountered in Interpreting Measurements of Oscillations Due to Ionization.*—It was not possible to interpret the rugged character of the wave forms, the variations in amplitude, and the indefiniteness of the frequency of the oscillations. Nor was it possible to determine what was the actual functional relation between the effective values of the oscillatory currents and the ionization in the dielectric which produced the oscillations. The knowledge of this relation is important for the correct interpretation of the measurements obtained in connection with the oscillation detection methods of testing cables. Without such knowledge the measurements of ionization in

---

*Announcement of partial results was published in a short abstract 49 in the Physical Review 37 (1931) pp. 1689-1690.

dielectrics by means of oscillations cannot be utilized in a quantitatively rational way, and the usefulness of this method must be limited to detecting the presence of ionized gas bubbles and to estimating roughly their relative abundance in dielectrics subjected to alternating potentials.

3. *Objects of Investigation.*—As a first step towards the solution of this problem and for the purpose of further improvements in the methods of testing cables and condensers, it was necessary to find out experimentally what are the particular ionic and electrodynamic processes connected with the oscillations due to ionization. A study of cables from this point of view could not be expected to yield reliable results. First of all, a cable with its composite dielectric and comparatively large dimensions did not present sufficiently simple conditions which could be independently controlled. Secondly, the opaqueness of its dielectric and its lead sheath excluded any possibility of direct observation of the various types of discharges produced by ionization. Therefore, recourse had to be had to models in which at least qualitatively, if not quantitatively, all the essential functional elements would be embodied. Corona tubes with a cylindrical electrode and a coaxial wire fixed on insulators or within a glass envelope were chosen for this purpose. Gaseous dielectrics, prevalently air, at various pressures, could easily be subjected in such tubes to alternating or continuous potentials. Corona discharges thus obtained were accessible for investigation with regard to their appearance. Also the frequency, wave form, and amplitude of oscillations of the various forms of discharges could be studied by means of oscillograms. The main object of this investigation consisted, first, in obtaining oscillographic records of corona wave forms under varying conditions of applied voltage, circuit constants, frequency, and gas pressure; secondly, in analyzing the records with the purpose of discovering typical oscillatory processes connected with corona discharges.

4. *Acknowledgments.*—This investigation has been carried on as part of the work of the Engineering Experiment Station under the general administrative direction of DEAN M. L. ENGER, Director of the Engineering Experiment Station. Acknowledgment is made of the services rendered successively by W. A. LANING, Jr., M. W. WOODRUFF, and W. W. BROOKS, Research Graduate Assistants, also of the valuable assistance of G. O. HUBBARD, Graduate Student in Electrical Engineering.

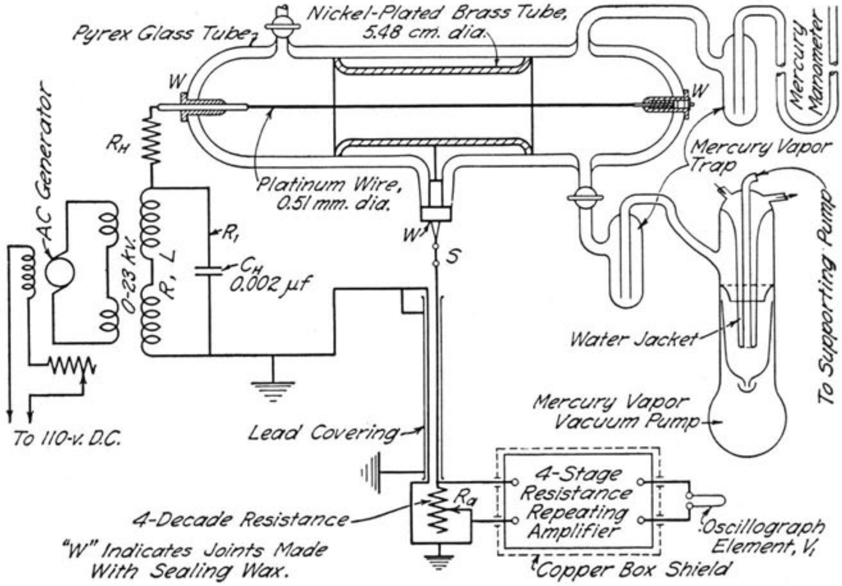

Fig. 1. Corona Tube Circuit Diagram and Vacuum System

II. Oscillographic Method of Studying Alternating Current Corona Oscillations

5. *General Arrangement of Apparatus.*—The diagram of connections for the apparatus used in obtaining the wave form of the composite charging and conduction current passing through the corona tube, when the latter was subjected to alternating potentials, is shown in Fig. 1. In most of the investigations the corona tube consisted of a nickel-plated brass cylinder with well rounded ends enclosed in a close-fitting glass tube with a platinum wire stretched through the glass tube concentric with the nickel-plated cylinder. The glass tube was sealed vacuum tight, and equipped with the neccessary accessories for evacuation and refilling, as shown in Fig. 1.

The high potential from the transformers was applied between wire and cylinder. The potential gradient established at the surface of the wire by applied voltage ionized the gas in the neighborhood of the wire and thus produced corona.

In order to adapt the General Electric oscillograph to the small currents from the corona tube a distortionless four-stage amplifier was developed, and its input placed across the resistance R_a in series with the shell of the corona tube and ground. The voltage across the non-inductive resistance R_a at any instant was directly proportional to and in phase with the current through it, hence the wave forms of the voltage across R_a and the current through it were identical. The wave form of the voltage across R_a was impressed across the input to the amplifier and amplified sufficiently (by adjusting R_a) until a satisfactory oscillograph deflection was obtained.

The high alternating potential impressed upon the corona tube was obtained from two different sets of potential transformers; the first set, consisting of two 11 000-volt 50-watt General Electric potential transformers connected in series, was used at the higher tube pressures; and the second set of two 2200-volt 15-watt Weston transformers connected in series was used at the lower tube pressures. The 25- and 60-cycle supply was obtained from a smooth-core General Electric alternator built especially to give a good sine wave of E.M.F. All impressed voltages are given as r. m. s. values.

The high-voltage condenser C_H consisted of a bank of four 8000-volt Dubillier condensers. Their total capacitance was 0.002 microfarads. The function of this capacitance was to smooth out the voltage wave impressed upon the corona tube. The harmonics in the E. M. F. wave from the generator used are of too small an amplitude to be detected in the oscillograms of the voltage wave. However, in the charging current of the corona tube these harmonics are amplified to such an extent that they entirely mask the effect of the first stages of corona formation. The oscillograms are far more intelligible if the harmonics are all sifted out, so that the effect of the corona is superimposed on a pure sine wave.

6. *Corona Tubes and Vacuum System.*—Two different corona tubes, each consisting of a wire and concentric cylinder, were used in the investigation. The shell of the larger was a brass cylinder 9.8 cm. inside diameter by 1.58 m. long, and open at the ends. The wire was stretched between two long bakelite rods whose axis coincided with the axis of the cylinder. One of the bakelite rods was equipped with a compression spring which kept the wire stretched tight at all times. The smaller corona tube consisted of a nickel-plated brass shell 5.48 cm. inside diameter by 17 cm. long, which fitted closely inside a closed glass tube 50 cm. long. Quarter-inch holes were carefully drilled in each end of the glass tube, and brass bushings were fitted into each. These bushings, through which the wire passed, helped to line it up with the axis of the cylinder. One of the bush-

ings was hollow and contained a compression spring which kept the wire under some desired tension at all times. The walls of the tube around the bushings *W* (Fig. 1) were sealed vacuum tight by means of sealing wax. This permitted the wire to be easily removed and cleaned when necessary. In connection with the small corona tube the following auxiliary equipment was used for adjusting and measuring the pressure within the tube:

(a) A 100-cm. mercury manometer to indicate the pressure within the tube; all pressures given are in either centimeters or millimeters of mercury.

(b) Two discharge electrodes sealed inside short glass tubes and connected to the large glass tube, to indicate roughly the low pressures.

(c) A vacuum-supporting rotating oil pump.

(d) A Knipp internal cooling mercury vapor pump supplied with an electric heater.

(e) Two stop-cocks; one opened the tube to the atmosphere and permitted filling the tube with different gases.

(f) Two mercury vapor traps immersed in liquid air, one between the tube and the mercury vapor pump, and the other between the tube and the manometer. These traps were immersed in ice water during the experiments with carbon dioxide in the tube.

7. *Oscillographs.*—Three types of oscillographs were available for recording wave forms of oscillations:

(a) Wood's cathode-ray oscillograph, which allowed six Schuman plates to be fixed on a rotating drum inserted inside the vacuum chamber for direct exposure to the recording cathode beam. This method was cumbersome, and did not yield photographic records of sufficient clearness for the purpose of analysis. It was used, therefore, only occasionally when frequencies higher than 10 000 cycles per second were looked for.

(b) Whenever a great number of clear photographic records was to be made in rapid succession, the type EM General Electric oscillograph was better suited. Like all electromechanical oscillographs this one had some limitations which could be only partly overcome. It would not respond to frequencies much higher than 10 000 cycles per second without overloading the vibrator. The current required to give a satisfactory deflection was about 50 ma for a frequency of 60 cycles per second; it exceeded twice this value for a frequency of 6000. But this last limitation of sensitiveness for higher frequencies was surmounted by developing a power amplifier.

(c) For purposes of observing the wave forms a Western Electric cathode-ray oscillograph was used, whose time-axis deflecting plates were shunted across a condenser charged and discharged periodically by means of a neon glow discharge tube.

8. *Amplifier.*—The current from wire to cylinder through the smaller corona tube was only a few microamperes, hence in order to adapt the oscillograph to these small currents it was necessary to develop a distortionless current amplifier.

The resistance-coupled amplifier has proved to be best suited to adapt the oscillograph to the small current flowing from the corona tube used. In determining the tubes and circuit constants to be used, an article by J. C. Warner and A. V. Loughren,* which gives the following conditions for maximum output with low distortion, was of considerable assistance: First, the grid must not be allowed to become sufficiently positive to draw appreciable current; second, the plate current must at no portion of the cycle be allowed to fall to so low a value that distortion is caused by the curvature of the dynamic characteristic; and third, the load resistance should be equal to twice the internal resistance of the tube.

The circuit constants for resistance-coupled amplifiers, using R. C. A. amplifier tubes, were estimated and the amplifiers using the different combinations of tubes were tested to show the amount of distortion caused by the amplification. The success of this investigation depended to a large extent on the reliability of the amplifier in reproducing correctly the input wave form. Many tests have therefore been devised for the purpose of removing any distortion which might be detected.

The circuits used to obtain various wave forms for testing purposes are shown in Fig. 2 (a, b, c, and d). In the arrangement shown in Fig 2a two thermionic tubes were used for converting the applied 60-cycle sinusoidal potential variations into non-sinusoidal ones. Negative potential at the grids was established by a battery adjusted so that the bias was sufficiently large to reduce the magnitude of the input current to zero during approximately one-third of the period. The arrangement shown in Fig. 2b was similar, only a condenser was added which made it possible for the higher harmonics of the applied alternating current to by-pass the tubes and to excite the amplifier. In the arrangement illustrated by Fig. 2c a buzzer circuit was used for producing peaked pulses. Finally, in Fig. 2d is shown the arrange-

---

*Proc. I. R. E. p. 735, 1926.

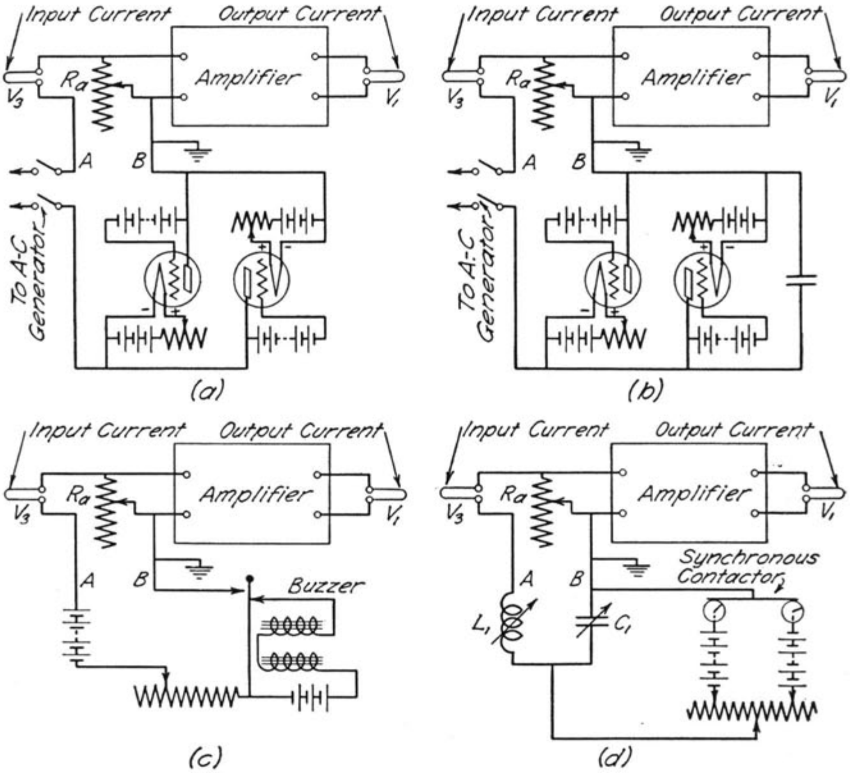

FIG. 2. CIRCUIT DIAGRAMS FOR PRODUCTION OF PULSES FOR AMPLIFIER TESTING

ment in which two interrupters of the rotating-contactor type were driven by a synchronous motor. The main input circuit included a variable inductance L_1 and a capacitance C_1. Parallel to the latter two current branches were connected, each supplied with a rotating contactor, a battery, and a rheostat. The polarity of the battery was reversed in one of the branches, and the corresponding contactor brush shifted in such a way that at a definite moment one contactor by closing the circuit produced a pulse in one direction, and at another moment the other contactor acted to produce a pulse in the opposite direction. By adjusting L_1 and C_1 the wave-form of the pulses could be varied. The faithfulness with which the amplifier would reproduce these different wave forms is shown in the oscillograms (Fig. 3). The top curve in each is the input, while the lower one is the output.

The method used in testing the amplifiers was to connect the points A and B of the input circuit into some of the circuits shown

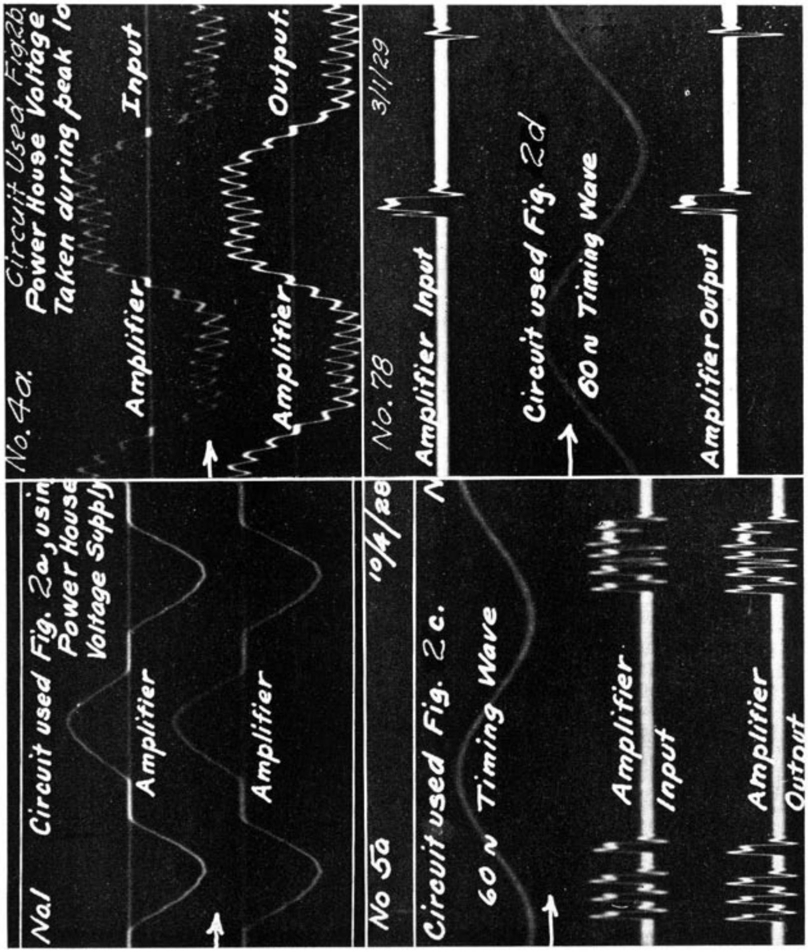

Fig. 3. Oscillograms Showing Fidelity of Amplifier Response

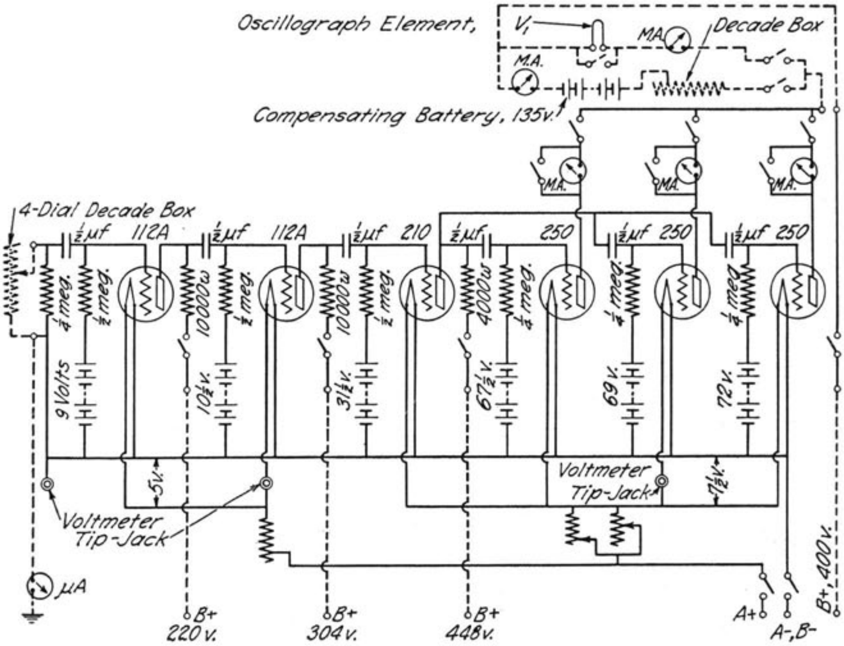

Fig. 4. Diagram of Resistance Coupled Amplifier

in Fig. 2, so that vibrator V_3 would record the wave form of the current of the external circuit, or the input to the amplifier, while vibrator V_1 would record the wave form of the output current of the amplifier. The input current amplitude of V_3 was controlled by means of resistances in the circuit external to points AB, while the amplitude of V_1, i. e., the output current, was controlled by means of the drop across the four-decade resistance box R_a. By viewing the output and input curves upon the tracing table of the oscillograph, and by adjusting until their zero lines coincided, the amount of distortion could easily be observed. Whenever changes were made in the amplifier, all four different wave forms of currents produced by the circuits shown in Fig. 2 were used in testing the amplifiers. That shown in Fig. 2a seemed to be the most difficult to amplify without distortion. After considerable experimental work the amplifier circuit shown in Fig. 4 seemed to give the best results. This amplifier was therefore used throughout the investigation. It was operated inside a copper box, which completely shielded it from any interference.

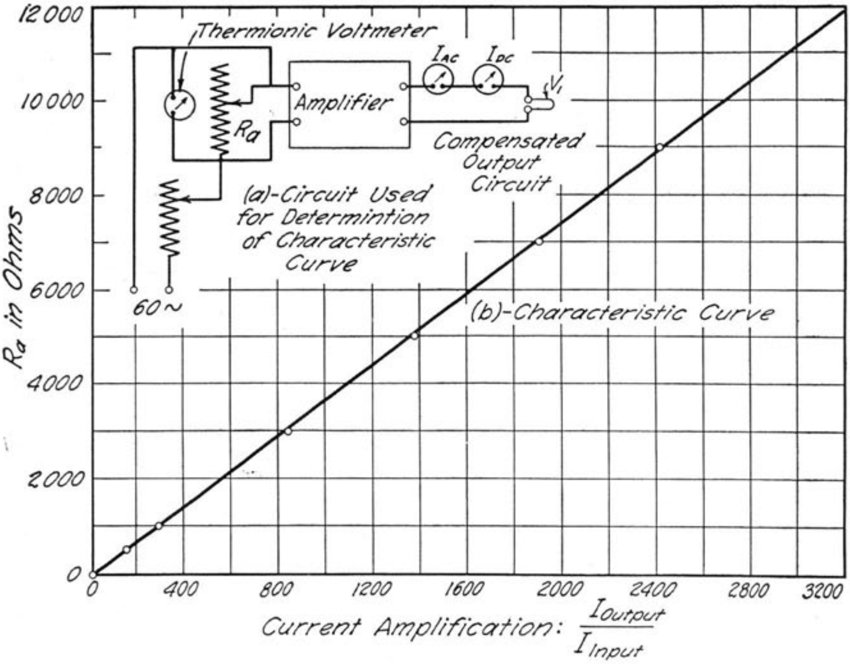

Fig. 5. Characteristic Curve of Current Amplification

The circuit shown in Fig. 5a was used to obtain data for the determination of current amplification of the amplifier as a function of the input resistance with the following amplifier outputs: **10**, **15**, **20**, and **25** milliamperes. The 60-cycle input current was determined from the thermionic voltmeter indications divided by the respective values of the resistance R_a while the output current was measured by the a-c. ammeters I_{AC}. The direct current component in V_1 indicated by the ammeter I_{DC} was reduced to zero by means of a compensating battery circuit shown in Fig. 4. The curves obtained for the four different outputs were so close together that it was impossible to distinguish between them, hence only one curve was drawn, as shown in Fig. 5b. The latter shows that the current amplification is constant with constant input resistance R_a for outputs between **10** and **25** milliamperes, also that there is a linear relation between input resistance and amplifier outputs.

9. *Oscillogram Notations.*—The amplifier and oscillograph were connected up permanently, and provided with a S. P. D. T. switch whereby the amplifier's input resistance R_a could be placed in series with either corona tube by merely throwing a switch. The connections were carefully tested, and the following relations between the oscillograph deflection and the polarity of the wire were found: A positive deflection (a deflection above the zero line) of the current vibrator V_1 indicates a current from the cylindrical anode to the wire of the tube, i. e., the wire was the cathode or negative to the shell of the corona tube. A negative deflection (a deflection below the zero line) of the current vibrator V_1, therefore, indicates a current from wire to shell, i. e., the wire was the anode.

These conventions have been indicated on each film by two concentric circles representing the wire and shell and marked plus or minus. Thus if the circles are placed above the zero line they indicate the polarities for positive deflections, and the inner circle is marked ⊖ and the outer ⊕. If the circles are below the zero line they indicate the polarities for negative deflections, and the inner circle is marked ⊕ and the outer ⊖. All of the oscillograms taken of corona discharge have three waves traced upon the films; vibrator V_1 traced the current wave form of the composite condenser and corona conduction current passing between wire and cylinder, and is designated by I; V_2 recorded the timing wave obtained from a General Radio 1000-cycle oscillator, Type **213**; and V_3 gave the wave form of the voltage across the primary of the high-potential transformers used. Its effective value of voltage is inscribed on the corresponding wave record.

III. General Properties of Alternating Current Corona Oscillations

10. *Characteristic Oscillations Due to Corona Discharges.*—The great number of observations and oscillographic records which had to be made in a systematic way required a guiding principle for selecting conditions for each particular experiment so as to obtain as directly as possible an answer to the questions pertinent to the mechanism of oscillations. The following theoretical assumptions were made as to the type of oscillations which may enter as components into the complex wave forms of corona discharges:

(a) Damped Circuit Oscillations. In this case variations of circuit constants, namely, the capacitance C and inductance L, should cause the frequency to change inversely to $\sqrt{CL}$. The insertion of a resistance R in the circuit should increase the damping and decrease the amplitude, but have only an inappreciable effect on the frequency.

The chemical nature and pressure of the gas should have no influence on the frequency.

(b) Relaxation Oscillations. The frequency in this type of oscillation would increase linearly with the product CR. The applied potential E should affect the frequency to a large extent. The frequency should also be a function of the breakdown potential e_b and of the extinction potential e_o. The pressure and nature of the gas should also enter as factors which affect the frequency because they determine e_b and e_o.

(c) Ionic Plasma Oscillations. Should this unique type of oscillations participate in the formation of the complex wave shapes observed in corona discharges, the frequency should be independent of L, C, R of the circuit. Only the current density should produce changes in frequency, which then would be proportional to $\sqrt{n}$, the square root of ion concentration.

(d) Successive transitions from one type of oscillation into another were considered as possible when the applied potential varied during the course of a cycle.

11. *Damped Circuit Oscillations.*—In laying out the circuit to be used in obtaining the wave form of corona discharge, the inductance of the high tension leads was made as small as possible in order to make the natural period of any circuit of which the resistance R_a might be a part as high as possible, and that R_a might be of the order of the critical resistance for that circuit. The circuit used is shown in Fig. 1. The natural period of any possible oscillatory circuits of which the resistance R_a was a part was measured by means of a wavemeter, a coil of 26 turns inserted between R_a and the corona tube and a spark gap. The lowest frequency observed was 1900 kc. using the coil of 26 turns, hence the natural period of any such oscillatory circuit without the coil must have been considerably more than 1900 kc. This shows that circuit oscillations, such as Bennett obtained,* would never be recorded by the oscillograph in this case, since the oscillograph used would not respond to frequencies much above 12 000 cycles per second. The high potential supply circuit had the lowest natural frequency. It consisted of the secondaries of two potential transformers L and condensers C_H. Its calculated natural frequency was 40 cycles per second.

In order to investigate the character of damped circuit oscillations produced by alternating current corona discharges, a series of experi-

---

*Bennet, Edward; Trans. A. I. E. E.; Vol. 32; p. 1787.

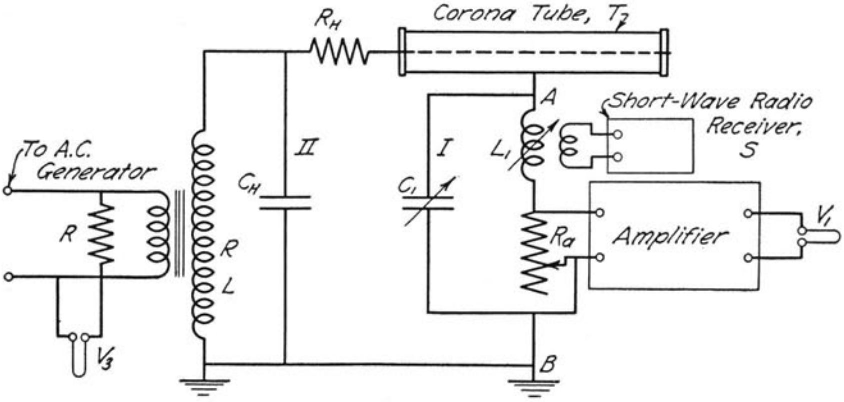

FIG. 6. DIAGRAM OF CONNECTIONS FOR EXCITATION OF CIRCUIT OSCILLATIONS

ments was performed with the arrangement shown diagrammatically in Fig. 6.

Into the branch AB was inserted, besides the input controlling resistance R_a, a variable inductance L_1. A variable condenser C_1 completed the oscillatory series circuit I. By varying C_1 and L_1 the natural frequency of this circuit could be adjusted over a wide range. Whenever corona discharges appeared in the tube T the vibrator V_1 recorded a damped oscillation whose frequency was in close agreement with Thompson's formula

$$f = \frac{1}{2\pi\sqrt{L_1C_1 - \dfrac{4L_1^2}{R_1^2}}} \tag{1}$$

Oscillograms Nos. 156 and 157 reproduced in Fig. 7 were chosen to illustrate the effect of circuit oscillations.

Oscillogram No. 156 was recorded with values of $C_1 = 0.03648\ \mu f$, $L_1 = 173.3\ mh$, and $R_a = 500\omega$. The measured natural frequency of the circuit was $f_o = 1997$, while the value calculated from the formula was 2000. The record shows that pure damped oscillations were produced only at the potential phases which made the wire electrode positive. This regular circuit oscillation occurred periodically at each cycle starting with a maximum amplitude and decaying exponentially to zero. The other potential phase which made the wire a cathode produced an irregular wave train which did not repeat exactly at each cycle, and started always with two small swings before

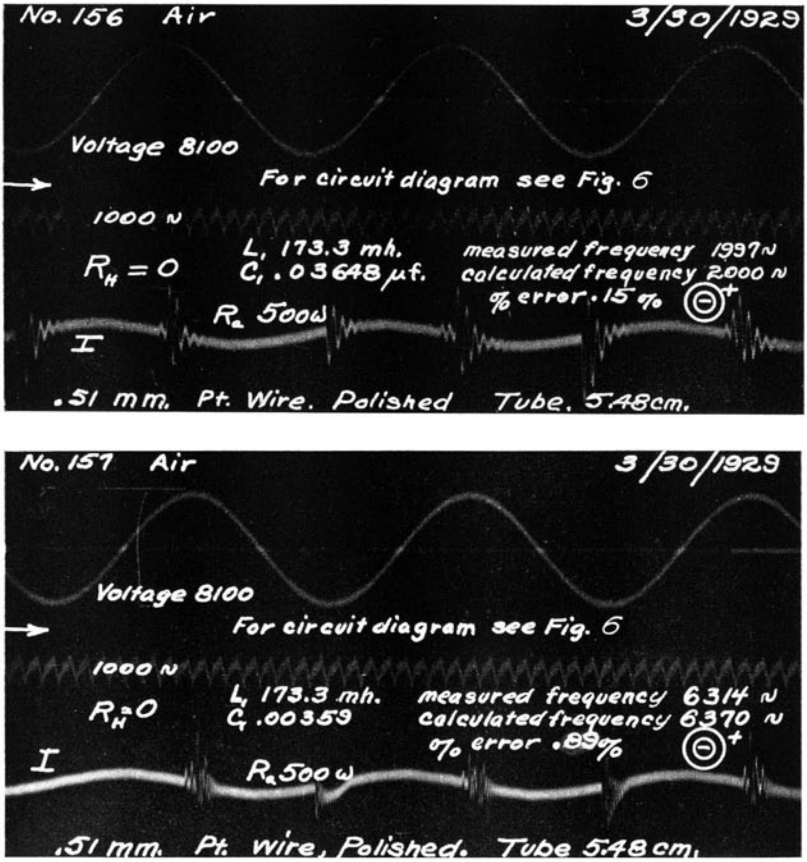

FIG. 7. OSCILLOGRAMS OF CORONA DISCHARGES SHOWING INTERFERENCE OF CIRCUIT OSCILLATIONS

the maximum amplitude was reached. Only then did the decrease of amplitude start, but at a slower rate than that of the adjacent phase.

By increasing the natural frequency of the circuit I, (Fig. 6) the differences which arose between the wave form produced by the positive phase of the corona as compared with that produced by the negative phase became more pronounced. Finally the wave trains lost any resemblance to regular damped oscillations and developed into most complex forms. Oscillogram No. 157 (Fig. 7) was taken at the same applied potential $E = 8100$ volts and the same inductance $L_1 = 173.3$ *mh*, but the capacitance was reduced to about $1/10$ of its former value so that with $C_1 = 0.00359$, the natural frequency increased 3.1 times, namely, to 6314 cycles per second. The deviation

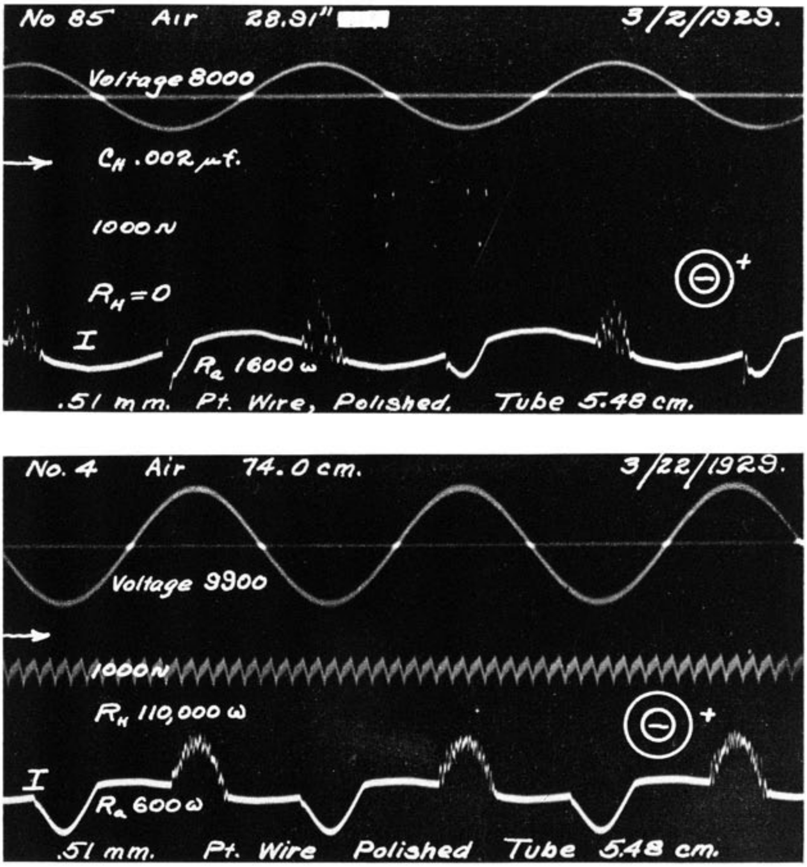

FIG. 8. TYPICAL OSCILLOGRAMS OF A-C. CORONA OSCILLATIONS WHEN CIRCUIT OSCILLATIONS WERE SUPPRESSED

of the wave form from the regular damped oscillation was especially apparent at times when the wire became cathode.

When the natural frequency of the circuit is increased beyond the limit which the electromechanical oscillograph is capable of recording, there remains nevertheless recorded the evidence of a complex wave train as represented by the oscillograms Nos. 85 and 4 in Fig. 8. They were obtained by removing the condenser C_1 and coil L_1 (Fig. 6). All that was left of the circuit I was the resistance R_a and the inductance of the leads AB. But the latter, together with the capacitance C_H of the tube T, and the resistance R_H, constituted another circuit II whose excitation by the corona produced damped oscillations. These unrecorded, highly-damped oscillations were detected by a radio receiver.

For this purpose a coil L_1 of 0.14 *mh* inductance was inserted which coupled the corona discharge circuit II with the short wave receiver S while the capacity branch C_1 remained open. With resistances R_H and R_a reduced to zero the frequency of the oscillations was 8100 kc. When the coupling coil L_1 was replaced by a short loop the frequency produced by the corona increased to 23 200 kc. The pressure exerted no effect whatsoever on the frequency, and the applied potential was also ineffective. So, for instance, at a pressure of 2.2 mm. of mercury the oscillations persistently remained of constant frequency when the applied 60-cycle alternating potential was varied from 750 to 1350 volts. Even with inserted resistance exceeding the critical value $R = 2\sqrt{L/C}$ distinct circuit oscillations were obtained. The frequency in such cases was very high, reaching 30 megacycles. The answer to the question as to the origin of these ultra high frequencies was obtained by considering the distributed capacity and inductance of the corona tube electrodes, and of the leads inserted between the resistances R_H and R_a. The circuit thus constituted resembled a Hertzian oscillator with standing waves produced by corona discharge pulses and by reflection from the ends of the leads terminated by high resistances.

Oscillographic records and repeated radio frequency measurements have thus verified the assumptions that the breakdown of a gaseous dielectric accompanied by a corona discharge always produces damped oscillations whose frequency and damping are determined by the constants of the adjacent circuit.

12. *Relaxation Oscillations.**—The properties of the residual oscillations recorded on the oscillograms shown in Fig. 8 were found to be entirely different from those of circuit oscillations. Comparison of the negative and positive phases of corona discharges as shown by typical records like those in oscillograms No. 85 and 4 (Fig. 8) disclosed a characteristic distinction between the residual oscillations superimposed on each of the phases. While the negative phase was marked by irregular waves which extended over the complete duration of the discharge, the positive phase did not always show an indication of oscillation; but whenever oscillations appeared they continued only

---

*The term "Relaxation Oscillations" has been introduced by Barth van der Pol for any type of non-sinusoidal oscillations whose period is mainly determined by the time of relaxation of energy stored in a condenser or inductance.

References: Phil. Mag. Vol. 2 pp. 978-992, 1926, and Proc. Inst. Radio Eng. Vol. 22, pp. 1075-1086, 1934.

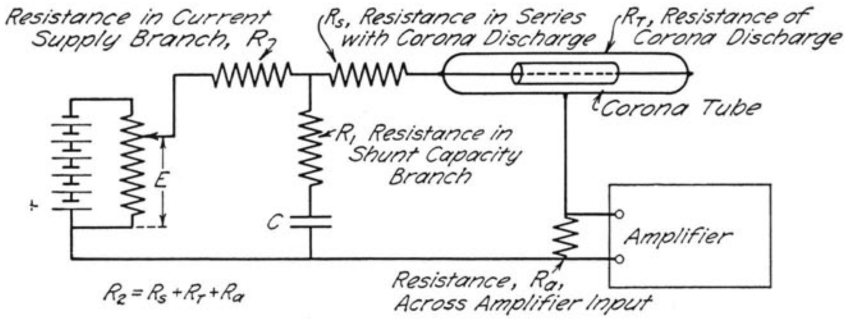

FIG. 9. DIAGRAM FOR EXCITATION OF RELAXATION OSCILLATIONS BY MEANS OF CORONA DISCHARGES

during a part of the corona hump. At the breakdown of the gas, a sudden pulse would start the oscillations which, however, would die out after a few swings. These additional two types, one characterized by a complex wave train, the other by a damped pulse, could not be accounted for by circuit oscillations.

An attempt was made to find an answer to the pertinent question as to the origin of these types of oscillations by investigating whether their frequency and amplitude were affected by applied potential and pressure. Such effects were actually discovered. The influence of applied potential was very marked, but extensive oscillographic studies were required to prove the assumption that beside the circuit oscillations, a relaxation type of oscillations participated in the process of corona wave formation.

The applied potential enters always as a factor in determining the wave form of relaxation oscillations whose period consists of two parts; first, the time T_1 required to charge the condenser composed of the capacitance of the corona tube and that of the associated circuit until the breakdown potential of the gas in the tube is reached; second, the duration T_2 of the corona discharge from the moment ionization sets in until the time of extinction when the decreasing potential across the tube can no more sustain the formation of ions by collision. This process of charging and discharging usually repeats itself many times during every half period of the applied a-c. potential and produces at each phase current variations superimposed over the corona humps.

For the sake of orientation preliminary experiments were made with constant potentials applied to the small corona tube. The latter was inserted in a circuit shown in Fig. 9. The outcome of this study was to establish beyond doubt the existence of continuous oscillations

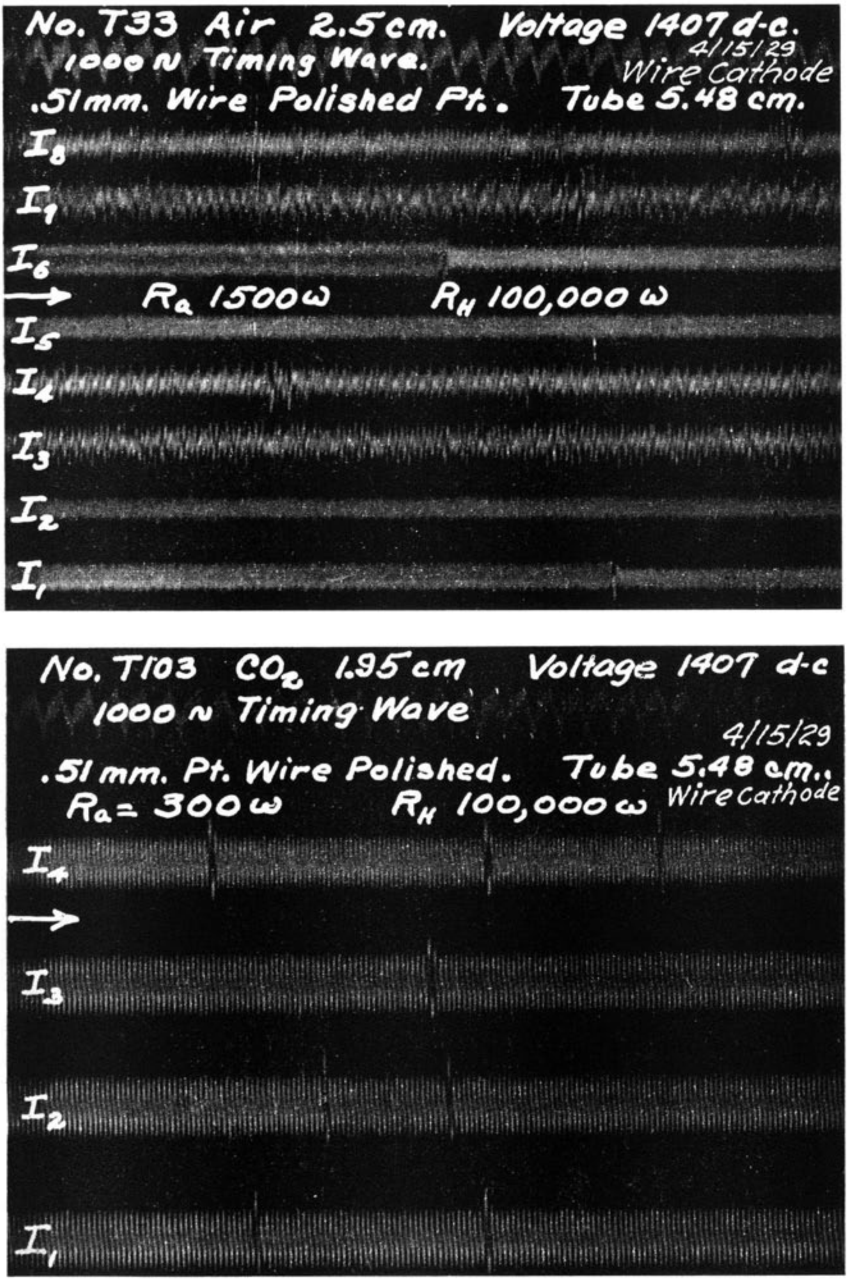

FIG. 10. OSCILLOGRAMS OF D-C. CORONA OSCILLATIONS

produced by d-c. corona discharges which could not be ascribed to circuit oscillations. An example of such oscillographic records is given in Fig. 10. The oscillogram No. T33 shows eight records I_1 to I_8 made consecutively one after another with the applied battery potential 1407 volts and 2.5 cm. air pressure. Besides irregular oscillations regular ones are seen whose frequency was, as determined by comparing with the recorded 1000-cycle timing wave, 11 500 cycles per second.

The simplest form of such relaxation oscillations occurs in rarified Geissler tubes subjected to constant potentials. In connection with a circuit similar to that shown in Fig. 9, but supplied with a Geissler tube instead of a corona tube, Righi* developed the following relations for T_1 and T_2, the duration of the charging and discharging periods, respectively:

$$T_1 = C\,(R + R_1)\log_\epsilon \frac{E - e_o}{E - e_b} \tag{2}$$

$$T_2 = C\,\frac{\rho}{R + R_2}\log_\epsilon \frac{ER_2 - e_b\,(R + R_2)}{ER_2 - e_o\,(R + R_2)} \tag{3}$$

where E denotes the voltage of the battery, e_b the breakdown potential, e_o the extinction potential and

$$\rho = RR_1 + R_1R_2 + R_2R \tag{4}$$

Although these relations are not directly applicable to corona discharges subjected to alternating potentials, they have served the purpose of indicating qualitatively what would be the effects of varying circuit parameters, in case the oscillations were of the relaxation type. Analysis of a great number of oscillographic records has supplied the evidence described in Chapter IV that mainly this type of oscillations contributes to the complex character of the wave forms revealed by the oscillograph.

13. *Ionic Plasma Oscillations.*—Plasma oscillations† usually occur in a region of copiously ionized gas in which electron and positive ion concentrations are approximately equal so that the space charge is inappreciable. It appeared hardly probable that such a region of uniform ionization could be sustained under conditions which prevail in a corona tube. The distribution of potential between a cylinder and a coaxial wire is non-uniform. The electric field is highly concentrated at the surface of the wire producing a gradient of electric force sufficient to ionize a thin layer of gas in the proximity of the wire. When,

---

*Righi A. Rend. Acc. Bologna; vol. 6; p. 188; 1902.
†Compton, Karl T. and Langmuir, Irving, Rev. of Modern Phys. Vol. 2, p. 239, 1930.

by increasing the applied voltage the gradient is augmented so that a glow fills the space adjacent to the cylinder, the current density nevertheless decreases with distance from the wire. The presence of a dark space indicates that the ion concentration varies also from point to point along the radius of the corona tube. With still larger applied potentials the effect of increasing space charges produces still greater inequalities of electron and positive ion concentrations. All these conditions tend to suppress the rise of plasma oscillations.

However, in some groups of experiments the variation of circuit constants had seemingly no effect on the wave form of the corona oscillations. The oscillograph recorded apparently equally irregular and rugged wave forms when resistances, capacitance, and inductances were introduced in the corona tube circuit. These observations suggested ionic oscillations whose frequencies were known to be entirely independent of circuit constants, and to vary as the square root of the ion concentration.

Close inspection and analysis of the respective oscillograms revealed in most of such cases that the average frequency did change with variation of resistance and capacitance. It was furthermore found on the basis of the theory of relaxation oscillations that in a few exceptional cases like those discussed in Section 20, the conditions of the experiments were such that the variation of frequency should have been inappreciable.

Attempts were nevertheless made to detect ionic oscillations. Actually oscillations were obtained which could not be classified under the relaxation or damped circuit type, but no direct proof could be produced that they were plasma oscillations.

14. *Effect of Space Charges.*—It was important to ascertain experimentally whether corona oscillations could be produced when space charges were present in the field, or whether absence of space charges was a necessary condition for the observed oscillatory phenomena. The question arose as to what might serve as a criterion in deciding when space charges were absent and when they were present. The use of proper electrodes placed at different points across the corona tube between the wire and cylinder was considered, but given up as complicated, and tending to distort the electric field distribution. The method which was finally adopted was evolved from the following considerations:

In their study of corona discharges, Bennet* and F. W. Peek†

---

*Trans. A. I. E. E.; vol. 32; p. 1799; 1913.

†Trans. A. I. E. E.; vol. 46; p. 1099; 1927.

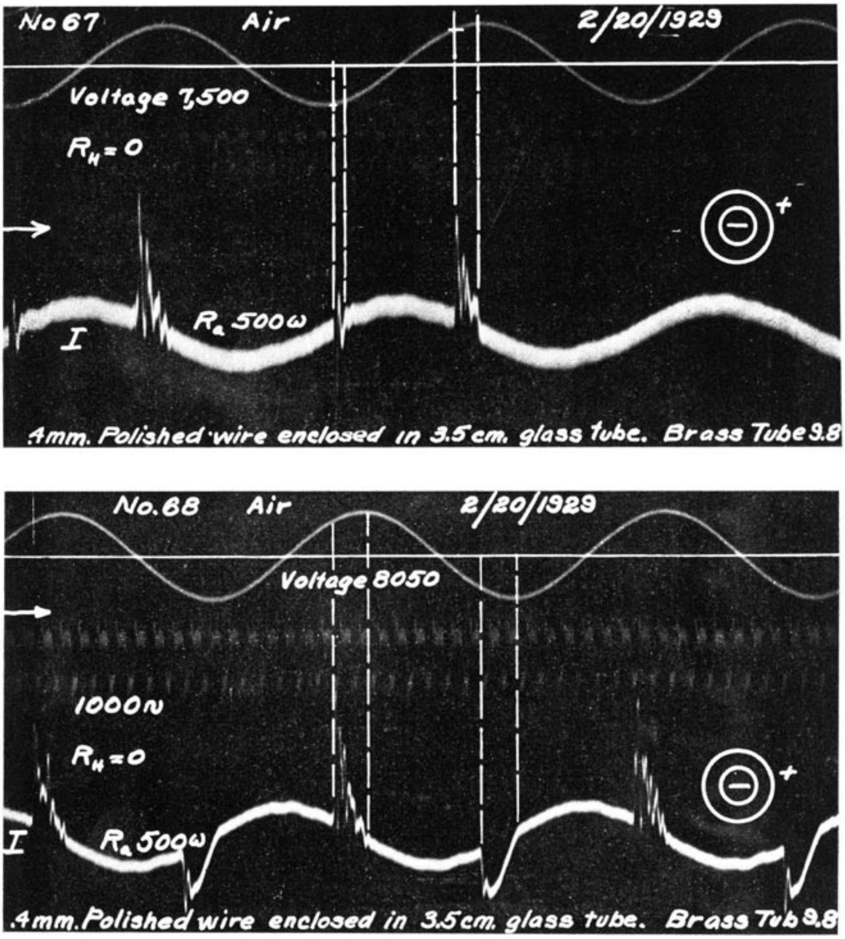

FIG. 11. OSCILLOGRAMS SHOWING DECREASE OF CORONA STARTING POTENTIAL DUE TO SPACE CHARGE

working with comparatively high potentials observed that the corona starting voltage decreased with the voltage applied to the corona discharge. Both ascribed this apparent lowering of the corona starting voltage to the space charge which accumulated between the wire and cylinder as a residue left over from one half cycle to the next. This suggested the possibility of checking the presence or absence of space charges by determining whether the corona starting potential varies or remains constant with applied voltage.

Inspection of all corona oscillograms obtained with different ap-

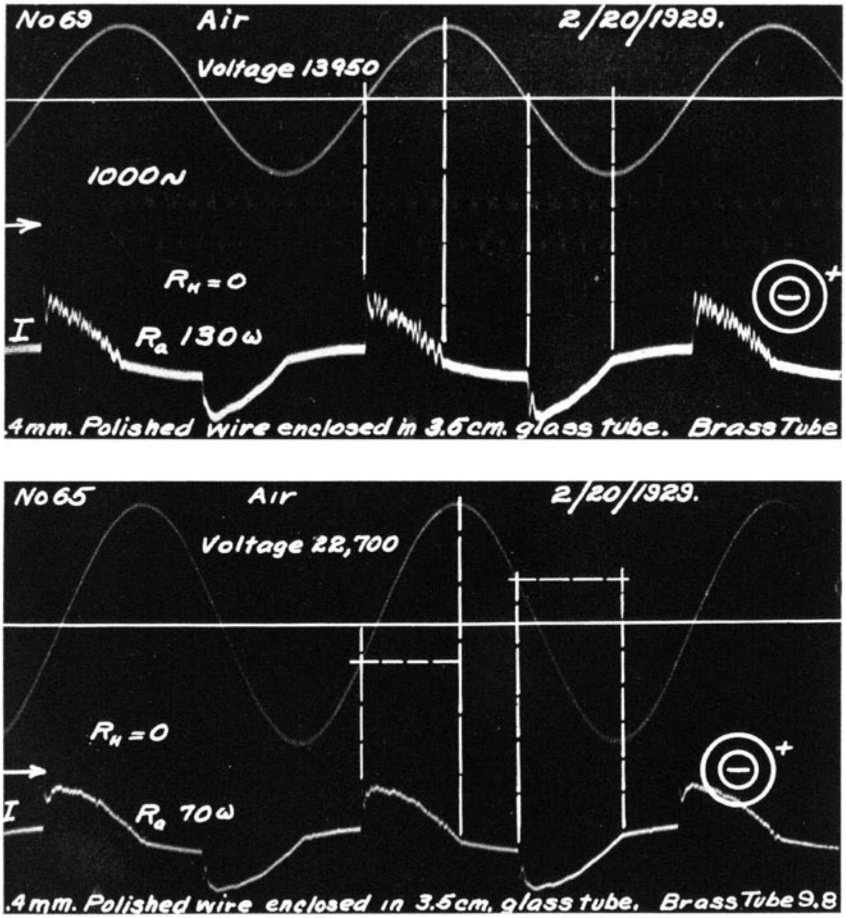

FIG. 12. OSCILLOGRAMS SHOWING DECREASE OF CORONA STARTING POTENTIAL DUE TO SPACE CHARGE

plied potentials clearly showed oscillations, but the corona starting voltage was found to be independent of the applied potentials. It was therefore concluded that these oscillations were not connected with pronounced space charges. The next step was to produce considerable space charges in the corona in order to test whether such new conditions would affect the production of oscillations.

For this purpose the larger corona tube with a brass cylinder 9.8 cm. in diameter was used. The polished steel wire 0.04 cm. in diameter was enclosed in a 3.5 cm. glass tube. The electrons and ions generated in the region around the wire were thus prevented from traveling to the walls of the cylindrical electrode. Due to the slow motion of positive ions as compared with electrons, space charges which accumulated in the enclosure between the wire and the glass tube barrier remained there from one half cycle to the next cycle. The series of four oscillograms reproduced in Figs. 11 and 12 were taken with this arrangement. Broken lines serve to connect the current wave in the corona tube circuit with the voltage wave acting across the primary of the transformer, and mark the points corresponding to the time when the corona discharge set in and when it was extinguished. Inspection of these points on all four oscillograms brought out the fact that in this case, when a barrier was used around the wire to enhance formation of space charges, the corona starting voltage decreased with increasing applied potential, and further, that when the applied voltage was approximately equal to twice the critical voltage of visual corona, the instantaneous value of the corona starting voltage was reached at a time when the primary voltage became zero (Fig. 12, oscillogram No. 69) and even crossed the zero line for the higher applied potentials. So oscillogram No. 65, taken at approximately triple the critical voltage, may serve as evidence that, by increasing the space charge, it is possible to push the corona starting point nearly over a quarter of a cycle ahead of the point where it ordinarily occurs in the absence of space charges.

The pertinent fact, however, which the oscillograms in Fig. 11 and Fig. 12 substantiated was that in presence of space charges corona oscillations set in the moment the corona started and continued for the entire duration of the negative corona discharge. Close inspection of the oscillograms leads to the conclusion that the general properties of these oscillations are similar to those produced when appreciable space charges were absent.

IV. EXPERIMENTAL EVIDENCES OF RELAXATION OSCILLATIONS

15. *Effect of Applied Potential on Frequency.*—The process of relaxation oscillations consists of a sequence of charging and discharging the capacitance of the corona tube circuit. According to Equations (2) and (3) the total period $T = T_1 + T_2$ is a function of applied potential E. Consequently, when the latter is subjected to a sinusoidal variation at a rate of 60 cycles per second, complex wave forms of the corona discharge are produced which will consist of pulses varying in frequency.

TABLE 1
EFFECT OF PRESSURE AND APPLIED POTENTIAL ON AVERAGE FREQUENCY OF CORONA OSCILLATIONS

1	2	3	4	5	6	7	8	9
Group	Oscillogram No.	Frequency of Applied Potential	Pressure mm. Hg.	Applied Potential volts	Width of Complete Single Period mm.	Half Number of Superimposed Peaks	Width of Negative Corona Hump mm.	Oscillation Frequency
		f_a	p	E	L	n	L_c	$f_o = f_a n L / L_c$
a	T9	60	43	1630	62	12	5	8950
	T10	60	43	1650	59	14	6	8250
	T11	60	43	1740	58	18	8	7780
b	H34a	60	100	2350	98	17	12	8360
	H35	60	100	2600	102	22	16	8450
	H36	60	100	3000	102	29	21	8526
	H37	60	100	4000	100	ampl. too small for counting	29	....
	H38a	60	100	4500	100		32	....
c	H17	60	200	3600	96	11	10	6330
	H18	60	200	4000	95	22	17	7400
	H19	60	200	4500	98	26	20	7645
	H20	60	200	5000	100	34	25	8200
	H16	60	200	6000	100	42	30	8300
d	T5	60	239	3600	63	5	3.5	5400
	6	60	233	3700	61	6	4	5510
	T7	60	233	4100	56	10	5	6720
	T8	60	233	4360	63	19	9.7	7400
e	H28	60	400	5500	98	9	8	6588
	H29	60	400	6000	97	23	19	7038
	H30	60	400	6500	100	28	22	7728
	H31	60	400	7000	100	33	25	7920
	H32	60	400	7500	101	35	25	8400
	H33	60	400	8000	100	38	28	8210
f	T1	60	740	7600	63	4	3.5	4320
	T2	60	740	8100	56	9	6	5020
	93	60	740	8450	58	13	8	5620
	T3	60	740	9000	56	17	9	6330
	4	60	740	9900	57	23	11	7180
g	H61	60	750	8500	103	16	16	6150
	H62	60	750	9500	100	24	22	6550
	H63	60	750	9000	100	21	19	6650
h	H22	60	760	9000	98	17	15	6630
	H23	60	760	9500	97	20	18	6480
	H24	60	760	10000	100	24	21	6840
	H25	60	760	10500	102	29	23	7656
	H26	60	760	11000	99	33	26	7524
	H27	60	760	11500	98	34	25	8160
i	T24	27	746	7900	130	8	6	4700
	T25	27	746	8100	134	16	12	4960
	T26	27	746	9050	128	39	21	6400
j	55	60	...	7700	63	4	5	3000
	56	60	...	8000	68	7	8	3560
	57	60	...	9000	62	14	10	5220

Actually all oscillograms indicate that the frequency varied continuously along the time axis, so that it was impossible to determine directly the frequency as a function of applied potential. It was found necessary to apply a rather imperfect method of counting the peaks over a complete wave train superimposed over a corona hump, measuring its duration on the time axis and calculating from these data the average frequency of oscillations. Only very clear oscillograms could be used for this purpose.

Data for air thus compiled from 43 oscillograms were arranged in 10 groups according to pressures, as shown in Table 1.

Column 1 enumerates these groups. Groups a to i refer to the small corona tube while group j refers to the large tube (see Section 6).

Column 2 denotes the number of the oscillogram.

Column 3 refers to the frequency f_a of the alternating potential applied to the corona tube.

Column 4 indicates the air pressure p in the tube in mm. of mercury.

Column 5 gives the applied potential E in volts.

Column 6 gives the length L of a complete period of the applied potential in mm. scaled along the time axis.

Column 7 indicates the counted half number n of oscillation peaks superimposed on corona humps when the wire is negative.

Column 8 gives the width L_c of the negative corona hump measured along the time axis.

Column 9 gives the average value for f_o, the frequency of the corona oscillation calculated from the relation $f_o = f_a nL/L_c$.

In Fig. 13 the average oscillation frequencies were plotted against applied alternating 60-cycle potential. Each of the first eight groups in Table 1 is represented by a corresponding curve. All curves show distinctly that the frequency f_o is a function of applied potential. However, no definite conclusion could be drawn as to the character of this function. With the exception of curve *a*, all show the frequency rising with the applied potential and indicate a tendency towards a constant value. Considering that curve *a* shows a decrease of frequency with potential and that curve *e* after reaching a maximum value indicates the beginning of a descending branch, it may be inferred that for large values of applied voltage the frequency decreases. Due to the limitations imposed by the method of determining frequencies, the results as represented by the curves in Fig. 13 must be looked upon merely as proving qualitatively that the oscillation frequency, unlike circuit oscillations, does depend on the applied potential. The origin of the oscillations superimposed on the negative corona humps, as shown in Fig. 8, may be ascribed to a process simi-

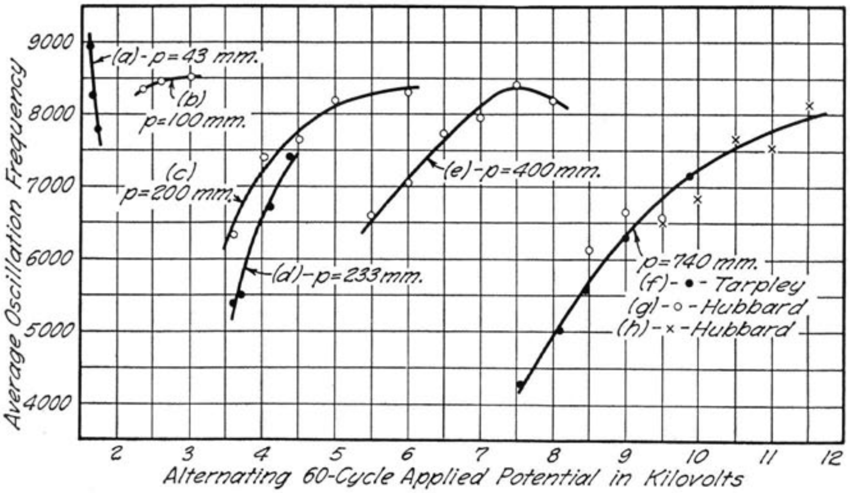

FIG. 13. EFFECT OF APPLIED ALTERNATING POTENTIAL AND OF PRESSURE ON AVERAGE FREQUENCY OF OSCILLATIONS

lar to that which gives rise to relaxation oscillations in a glow tube shunted by a condenser C and inserted in a circuit in series with a high resistance R and a source of electromotive force E, as represented by the diagram in Fig. 9.

As to the oscillations superimposed on the positive corona hump, no a-c. oscillographic record could be made which would prove as directly as was done for the negative corona that they are of the same origin. The following may throw some light on this aspect of the problem.

Inspection of many series of oscillograms taken at increasing applied potentials reveals at higher voltages a gradual disappearance of oscillations both on negative and positive corona humps. Oscillogram No. 4 in Fig. 8 may serve as an example of an intermediate stage. It was taken under conditions similar to those of No. 85 with the exception that the latter was taken with an effective voltage $E = 8000$ volts and $R_H = 0$, and the former with $E = 9900$ volts and $R_H =$ 100 000 ohms.

Observations with the cathode-ray oscillograph have also demonstrated that a total disappearance of the oscillations actually takes place when the voltage exceeds certain values. This is in agreement with the theory of relaxation oscillations if the plausible assumption is made that with increasing applied potentials the magnitudes of the breakdown voltage e_b and extinction voltage e_o become equal. It follows from Equations (1) and (2) that for

$$e_b = e_o \qquad\qquad T = T_1 + T_2 = 0$$

The fact that both positive and negative corona discharge oscillations are similarly influenced by the applied potential suggests that they are produced by the same processes.

16. *Effect of Pressure.*—According to a general discharge theorem, the breakdown potential in similar systems is a function of the product of density and dimension. Therefore with increasing gas pressure the breakdown potential also increases.

Because the oscillations cannot start before a discharge takes place, larger applied potentials were required to start the oscillations at higher pressures. It has been shown in the preceding section that no oscillations were produced when the applied potential exceeded certain values. At higher pressures larger potentials were required to reach this non-oscillatory state. The limitations of the electromechanical oscillograph did not allow of the direct determination of the upper values of potentials for which oscillations stopped at particular pressures. So much, however, was brought out by the data for the negative corona compiled in Table 1 and represented by the family of curves in Fig. 13 that for each particular pressure there is a singular curve which gives the relation between average frequency and applied potential. These curves shift with increasing pressures in the direction of higher applied potentials.

The study of the effect of pressure was of especial interest in connection with the striking difference in the character of oscillations superimposed on the entire corona discharge hump when the wire was negative, as compared with only partial covering of humps by oscillations in case the wire was positive. The question presented itself, whether this trait would persist for all pressures, or whether variation of pressure would affect or perhaps reverse what appeared as the characteristic property.

It was found that by gradually reducing the pressure below 3 mm. oscillations on the negative corona became restricted to moments immediately following the starting of the corona and that their occurrence was limited to a narrow range of applied potentials decreasing with pressure. At the same time oscillations on the positive corona expanded over a larger range of potentials. Finally no oscillations could be detected on the negative corona hump, while the positive corona humps were entirely covered with oscillations.

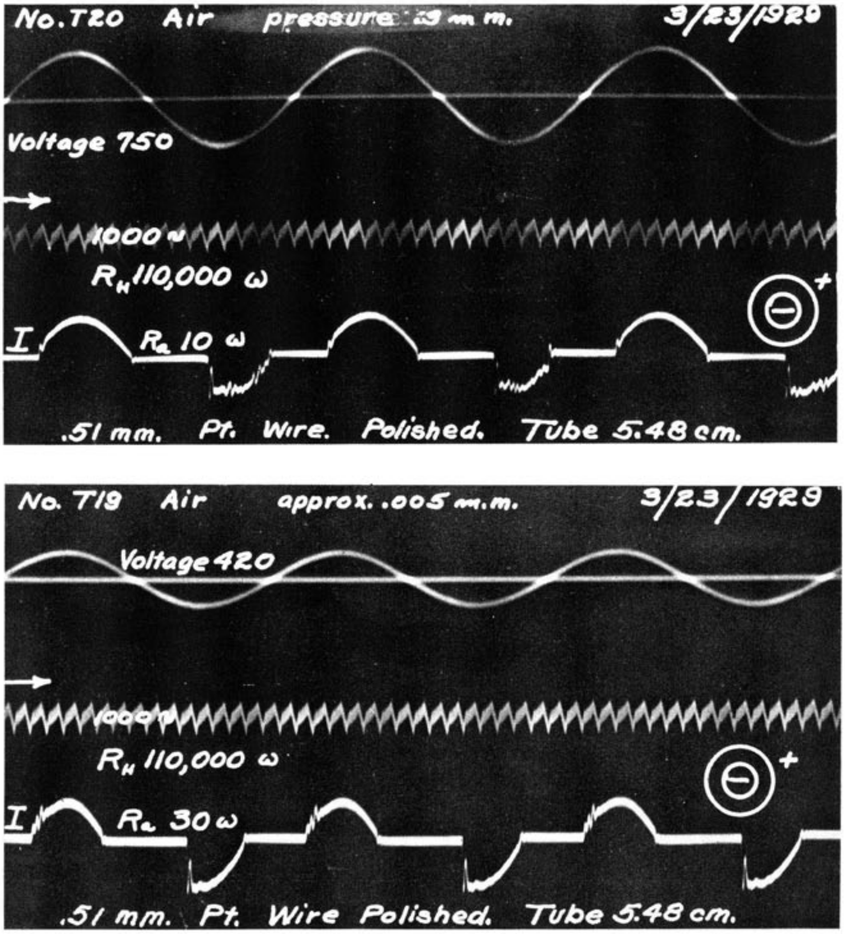

FIG. 14. OSCILLOGRAMS SHOWING REVERSAL OF CHARACTERISTIC WAVE FORMS

Such a reversal of the characteristic properties of positive and negative corona is shown in Fig. 14 on oscillogram No. T20, which was taken at a pressure of 0.3 mm. and with 750 volts applied potential. Under these conditions the oscillations were superimposed over the entire positive corona, while the negative corona hump had only an indication of a superimposed pulse. This was exactly opposite to what was shown by oscillogram No. 4 in Fig. 8, when the pressure was 740 mm. and the applied potential was 9900 volts.

With pressures still more reduced, the distinction between oscillations on negative and positive corona humps disappeared. Evidence

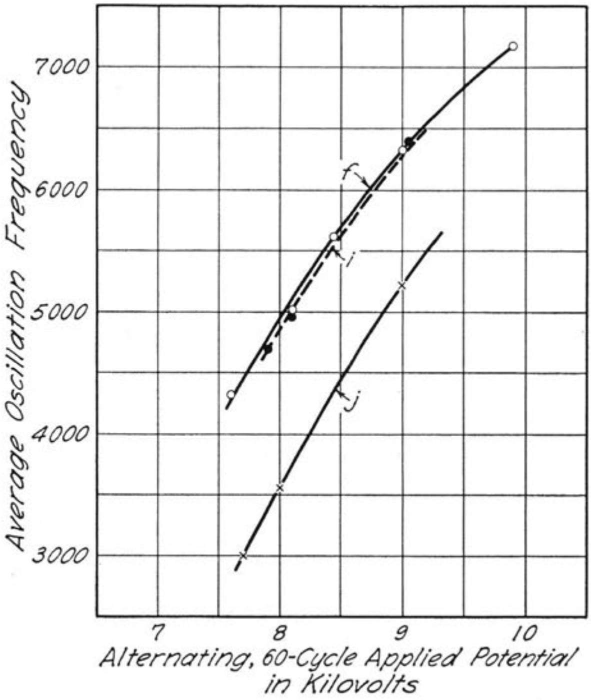

Fig. 15. Effect of Frequency of Applied Potential and of Tube Dimensions

of this is given in Fig. 14 by oscillogram No. T19, which shows that in this case oscillations of both negative and positive corona extend only over one third of the duration of a complete discharge.

17. *Effect of Corona Tube Dimensions.*—Another question which demanded an answer before further extensive investigations could be undertaken was the influence the dimensions of the corona tube may exert upon the character of the oscillations. Oscillograms with the large corona tube (see Section 6) were taken and compared with those obtained with the small tube at atmospheric pressure. The two groups thus compared are marked in Table 1 by j and f, respectively. Corresponding curves are shown in Fig. 15. The j curve indicates that at equal applied potentials the larger tube gave lower frequencies than the small one represented by the f curve. The latter shows a shift parallel to the X axis in the direction of lower applied potentials.

The ratio of the potential gradients at the negative wire electrode of each tube was calculated from the relation

$$\frac{R_1}{R_2} = \frac{r_2 \log_\epsilon \dfrac{R_2}{r_2}}{r_1 \log_\epsilon \dfrac{R_1}{r_1}} = \frac{0.02}{0.025}\,\frac{\log_\epsilon 245}{\log_\epsilon 109.3} = 0.94 \qquad (5)$$

where for the larger tube R_2, r_2 denote the radius of the outer cylinder (4.9 cm.) and the radius of the concentric wire (0.02 cm.), respectively, and R_1, r_1 the corresponding dimensions 5.48 and 0.025 cm. of the smaller tube. This ratio was 0.94.

The breakdown potential of the small tube in air at atmospheric pressure as determined from a number of oscillograms was 8000 volts. The breakdown potential of the larger tube according to the foregoing relation should have been 8000/0.94 = 8500 volts, but was determined experimentally to be 8780 volts. Both values are close enough to suggest that the shift toward smaller potentials of the frequency curve f for the smaller tube may have been caused by the difference in breakdown voltages 8780−8000 = 780 volts, the result of the different potential gradient established by equal voltages applied to the two tubes of different dimensions.

When the oscillograms taken with the small tube were compared with those taken with the larger tube but subjected to correspondingly higher applied potentials, the appearance of the wave forms recorded for the two tubes was generally the same. It was therefore concluded that the dimensions of the tube do not introduce essential complications in the main properties of corona oscillations. All further investigations were therefore limited to the smaller tube.

18. *Effect of Frequency of Applied Potential.*—In the course of the investigation it was found necessary to ascertain that slight variations in the frequency of the applied alternating potential do not influence appreciably the character of the corona oscillations. For this purpose a group of oscillograms was taken at atmospheric pressure and at alternating potentials of 27 cycles per second. In Table 1 the results of scaling these oscillograms were included under group i. Curve i in Fig. 15 shows the average oscillation frequency as a function of applied potential at 27 cycles, while curve f gives a similar relation for a frequency of 60 cycles. There was hardly any appreciable difference detectable which could not be ascribed to error of observation or to slight deviation of pressure. So, for instance,

the slight shift of the i curve towards higher potentials may be explained by a somewhat larger pressure of $p = 746$ mm. as compared with $p' = 740$ mm. at which the f group of oscillograms was taken.

19. *Amplitude of Circuit Oscillations.*—The problem of amplitudes had to be subdivided into four parts in accordance with the two types of oscillations (circuit and relaxation) and the two phases of the corona discharge (wire negative and wire positive).

The amplitude of circuit oscillations was studied by observing the maximum deflections of the oscillographic element on a screen. The experimental arrangement was similar to that used for the oscillograms in Fig. **8** and described in Section **11**, but the inductance of the circuit was increased. The natural frequency was thus lowered to **1700** cycles per second, and consequently typical damped oscillations were obtained. The amplitude for the phase when the wire was negative increased with applied voltage and with pressure. No further increase of amplitude could be observed when by increasing the potential there appeared an intense glow adjacent to the inner surface of the cylindrical electrode and opposite each bead on the wire. Moreover, from this moment on there was observed a tendency for the amplitude to decrease. Further increase of corona current had to be stopped because of the danger of destroying the tube by arc formation.

Similar observations of circuit oscillations were made for the other discharge phase when the wire was positive. The amplitude was somewhat larger as compared with those at the negative phase. This may be explained by the higher potential required to break down the gas when the wire is positive and by the consequent suddenness with which the discharge sets in.

20. *Amplitude of Relaxation Oscillations.*—For the study of current amplitudes of the relaxation type of corona oscillations mere observations on the screen were not sufficient. Photographic records were made which showed clearly the corona wave forms produced by varying applied potentials and pressures. These oscillograms were carefully scaled. Only the phase when the wire was negative has been considered. The area of the negative corona hump superimposed on the charging current was measured with a planimeter, and the amplitude of the oscillations determined under a magnifying lens. Since the wave forms of the oscillations were irregular and did not repeat, it was necessary to adopt some method of averaging the amplitude. Small amplitudes distributed over the steep ascending or descending parts of the corona hump could not be discerned with sufficient accuracy. Therefore, only oscillations at the peaks of the humps were considered. For any peak three maximum amplitudes (from upper maximum to lower minimum) were averaged. There were generally three negative humps recorded on each oscillogram corresponding to three cycles of applied potential. The average of three such cycles was taken, so that the value given as average amplitude was determined by measuring nine amplitudes. Considering that the sensitivity of the electromechanical oscillographic vibrator depended on the frequency, it was necessary to apply correction factors K_1 determined from curves obtained by measurements of sensitivity for a series of frequencies. The amplifier input resistance R_a had to be readjusted for each record. In order to obtain comparable values of amplitudes a factor K_2 was introduced which reduced all amplitude measurements to $R_a = 10\ 000$ ohms.

Table 2 was compiled from data derived by scaling oscillograms.

Column 1 indicates the number of the oscillogram.
Column 2 indicates the air pressure p, in mm. of mercury.
Column 3 indicates the applied 60-cycle potential E, in volts.
Column 4 indicates the amplifier input resistance R_a, in ohms.
Column 5 indicates the average area under discharge hump a, in sq. inches.
Column 6 indicates the duration of discharge l, measured in inches along the time axis.
Column 7 indicates the maximum deflection h due to discharge, measured in inches.
Column 8 indicates the average discharge current I_{av}, in micro-amperes.
Column 9 indicates the average amplitude A_{av} of oscillations, in inches.
Column 10 indicates the average frequency of oscillation, in cycles per second.
Column 11 indicates the oscillographic frequency sensitivity correction factor K_1, in microamperes per inch.
Column 12 indicates the input resistance reduction factor K_2 for 10 000 ohms.
Column 13 indicates the corrected amplitude $A_c = A_{av}K_1K_2$, in microamperes.
Column 14 indicates the ratio A_c/I_{av}, showing amplitude of oscillation per microampere of average discharge current.

The three families of curves a, b, and c in Fig. 16 represent the results graphically. Figure 16a shows the average discharge current I_{av} as a function of applied 60-cycle potential for four values of pressure, $p = 100$, 200, 400, and 760 mm. of mercury. Figure 16b shows the average current values of amplitude A_{av} under identical conditions, and Fig. 16c gives the ratio between amplitude and discharge current. It appears from these curves that while the average discharge current increases with applied potentials, (Fig. 16a) the amplitude of

TABLE 2

AMPLITUDE DATA OBTAINED BY SCALING OSCILLOGRAMS

1	2	3	4	5	6	7	8	9	10	11	12	13	14
Number of Oscillogram	Air Pressure mm. Hg.	Applied 60-cycle Potential volts	Amplifier Input Resistance ohms	Average Area Under Discharge Wave sq. in.	Duration of Discharge in.	Maximum Deflection Due to Discharge in.	Average Discharge Current μ-amp.	Average Amplitude of Oscillation in.	Average Frequency of Oscillation cycles per sec.	Oscillographic Frequency Sensitivity Correction Factor	Input Resistance Reduction Factor	Corrected Amplitude μ-amp.	Ratio
	p	E	R_a	a	l	h	I_{av}	A_{av}	f	K_1	K_2	A_c	A_c/I_{av}
H34a	100	2350	6000	0.49	0.56	0.94	64.4	0.525	8360	37.6	1.67	32.9	0.51
H35a	100	2600	4000	0.58	0.63	0.85	82.5	0.225	8450	38.4	2.5	21.6	0.26
H36a	100	3000	2500	0.71	0.65	0.90	147.0	0.100	8526	39.1	4.0	15.6	0.11
H17	200	3600	7000	0.177	0.54	0.33	19.3	0.60	6400	23.0	1.4	19.71	1.00
H18	200	4000	3000	0.353	0.72	0.49	67.0	0.20	7300	29.0	3.33	19.32	0.29
H19	200	4500	3000	0.560	0.80	0.71	96.0	0.11	7800	32.8	3.33	12.02	0.13
H20	200	5000	2000	0.673	1.04	0.65	133.0	0.05	8100	35.3	5.0	8.83	0.07
H16	200	6000	1000	0.713	1.23	0.57	237.0	0.015	8400	38.0	10.0	5.70	0.02
H28	400	5500	4000	0.18	0.38	0.50	51.3	0.675	6588	24.1	2.5	40.7	0.79
H29	400	6000	4000	0.58	0.65	0.82	83.8	0.50	7038	27.1	2.5	33.8	0.41
H30	400	6500	3000	0.84	0.90	0.93	127.5	0.30	7600	31.2	3.33	31.2	0.25
H31	400	7000	2000	0.83	1.03	0.83	171.0	0.175	8120	35.4	5.0	31.0	0.18
H32	400	7500	1500	0.73	1.05	0.69	190.0	0.125	8400	38.0	6.67	31.7	0.17
H33	400	8000	1300	0.85	1.11	0.77	244.0	0.105	8210	36.3	7.7	29.3	0.12
H21	760	8600	4000	0.14	0.54	0.26	26.6	0.66	5800	19.5	2.5	32.2	1.21
H22	760	9000	4000	0.29	0.61	0.48	49.5	0.415	6300	22.4	2.5	23.2	0.47
H23	760	9500	4000	0.48	0.73	0.66	67.8	0.392	6800	25.6	2.5	25.1	0.37
H24	760	10000	4000	0.78	0.82	0.95	97.0	0.35	7200	28.3	2.5	24.8	0.26
H25	760	10500	3000	0.90	0.90	1.00	136.0	0.25	7500	30.5	3.33	25.4	0.18

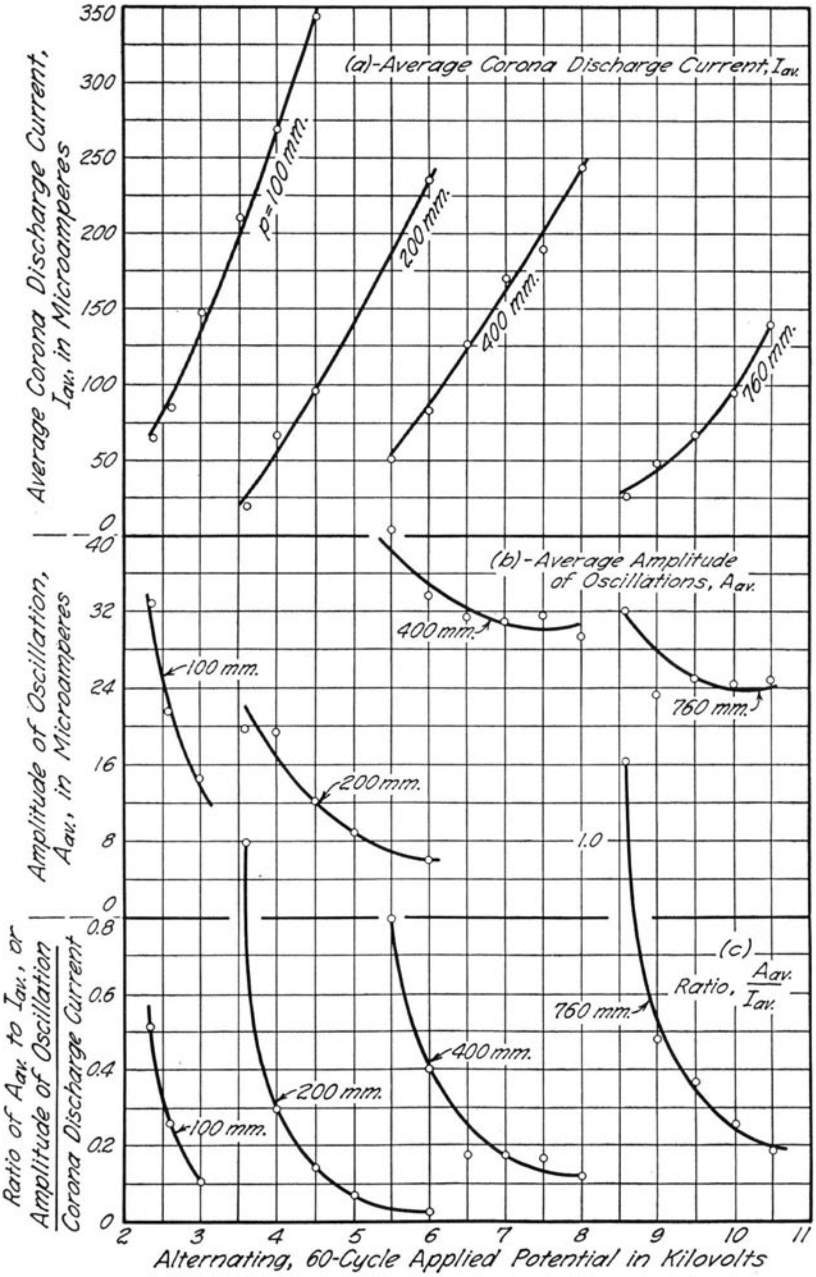

FIG. 16. EFFECT OF APPLIED POTENTIAL AND PRESSURE ON AVERAGE DISCHARGE CURRENT AND ON AMPLITUDE OF OSCILLATIONS

oscillation decreases in magnitude when the applied potential is increased (Fig. 16b). It follows also from Fig. 16c that with increasing corona discharge current I_{av} the average amplitude A_{av} of oscillations decreases.

The oscillations superimposed on the corona hump when the wire was positive, when compared with those produced by the negative corona at the same pressure, appear different in character. It has been shown in Section 16 that for certain values of low pressure the distinction disappears and becomes even reversed in character. There was, however, observed one distinguishing property of the positive corona oscillations, namely, that the first amplitude following breakdown of the air is always larger than that of the negative corona. The amplitudes of the positive corona oscillations decrease likewise when the voltage exceeds certain values.

21. *Effect of Resistance on Frequency.*—If the corona oscillations are of the relaxation type, the insertion of resistance in any branch of the circuit should reduce the frequency. In many cases the expected effect has been obtained. It was directly observable at lower pressures by measuring the distance between the peaks of the pulsating corona discharges which occurred during a single negative half-cycle of the applied potential. So, for instance, with the arrangement shown in Fig. 1, when only one transformer was used, and the pressure in the corona tube was 1.7 mm. of mercury, 580 volts of the 60-cycle applied potential was sufficient to produce a corona discharge whenever the wire became cathode. Each such discharge appeared on the fluorescent screen of the cathode-ray oscillograph as composed of five distinct pulses whose peaks were separated from each other by a distance depending on the value of the resistance R inserted in series with the transformer's secondary windings. When this resistance was changed from 0.9 to 1.23 megohms (ratio 1:1.36) the distance between the last two peaks changed from 3.5 to 4.7 mm. (ratio 1:1.34). Similar observations lead to the conclusion that the period of pulsations increased approximately linearly with the increase of the resistance R. However in some experiments the insertion of resistances did not affect the frequency. These latter cases were carefully investigated in order that there might be no uncertainty left in regard to the type of the corona oscillations.

Table 3 was compiled from data scaled from those oscillograms which show no appreciable change of frequency in spite of the insertion of ohmic resistances of considerable magnitudes. The resistances

TABLE 3

EFFECT OF RESISTANCE INSERTED IN CORONA DISCHARGE BRANCH ON AVERAGE FREQUENCY OF OSCILLATIONS

1	2	3	4	5	6	7	8	9	10	11	12
Number of Oscillo-gram	Air Pressure mm. Hg.	Applied 60-cycle Potential volts	Resistance in Supply Branch ohms	Resistance in Capaci-tance Branch ohms	Resistance in Tube Branch ohms	R_2/R	$\frac{R_2}{1+\frac{R_2}{R}}$	Half Number of Super-imposed Peaks	Duration of Negative Corona Discharge mm.	Duration of Complete Period of Applied Potential mm.	Oscillation Frequency $f_o = f_a n L/L_e$
	p	E	R	R_1	R_2			n	L_e	L	f_o
85	735	8000	19200	0	$R_T + 0$	52	0.0189	11	8.0	62	5150
86	735	8050	19200	0	$R_T + 6 \times 10^6$	364	0.0191	8	6.5	62	4600
90	735	8100	19200	0	$R_T + 11 \times 10^6$	624	0.0192	9	7.0	62	4800

R, R_1, and R_2 refer to Fig. 9. The value of R was obtained by measuring the ohmic resistance of the two high voltage transformers which supplied the 60-cycle alternating potentials to the corona tube, as shown in Fig. 1. The resistance R_H in this figure represents a part of the total resistance R_2 inserted in the tube branch.

Discussion of Righi's equation leads to the conclusion that, under the conditions enumerated in Table 3, the frequency could not be expected to change considerably. It must be taken into consideration that the three oscillograms listed in Table 3 were taken for $R_2 > R$ and $R_1 = 0$, where R_2 includes the average resistance of the discharge R_T.

Modifying accordingly Equations (2) and (3) and (4) we obtain

$$T_1 = CR \log_\epsilon \frac{E - e_o}{E - e_b} \tag{6}$$

$$\rho = RR_2 \tag{7}$$

$$T_2 = C \frac{R_2}{1 + \frac{R_2}{R}} \log_\epsilon \frac{E - e_b\left(1 + \frac{R}{R_2}\right)}{E - e_o\left(1 + \frac{R}{R_2}\right)} \tag{8}$$

It follows from Equation (6) that T_1, the period of charging, is entirely independent of R_2. As to T_2, the period of discharging, Equation (8) shows that it depends on the ratio R_2/R. Estimating $R_T = 10^6$ ohms, the ratios R_2/R were calculated as indicated in column 7. The factor $\frac{R_2}{1 + \frac{R_2}{R}}$, as shown in column 8, remains in all three cases approximately constant. Also the logarithmic term in Equation (8) did not change considerably with R_2, because $\frac{R}{R_2}$ is much smaller than unity. All these considerations lead to the rule that whenever R_2 is very large compared with R its variation has little effect on the frequency.

In the actual determination of the average frequency the method of counting the peaks was again reverted to. The results are found in column 12. The variation due to changing of R_2 is in these cases comparatively small. It could hardly be expected that the foregoing equations, developed for constant potentials, could be strictly applied for 60 cycles, but they show under what conditions insertion of resistances does not appreciably affect the frequency of relaxation oscillations.

22. *Effect of Shunted Capacitance.*—The frequency of the relaxation type of oscillation varies linearly with the capacitance of the condenser shunted across the discharge. Oscillograms have been taken of the corona oscillations for different values of the capacitance C_H (Fig. 1) and the data compiled in Table 4. Column 4 indicates the values of the capacitance of the condenser C_H. In order to obtain the total value C it was necessary to add the capacitance of both high tension transformers, of the corona tube, and of the leads, which was 240 $\mu\mu f$. Column 5 shows this total value for C. The average frequency determined by the method of counting the peaks is indicated in column 10, and the corresponding value of the period is given in column 11. The table shows clearly that the average oscillation period increased with shunted capacitance. That this increase was not linear may be ascribed to the indefiniteness connected with the method of averaging the frequency over that part of a cycle of applied potential during which each train of corona oscillation was produced.

V. SECONDARY EFFECTS OF ALTERNATING CURRENT CORONA DISCHARGES

23. *Effect of Surface of Wire Electrode.*—The effect of the condition of the surface of the wire upon the wave form of the conduction current through the corona tube has been studied by comparing polished and corroded steel wires when used as electrodes. Oscillograms obtained at atmospheric pressure with steel wire 0.04 cm. in diameter which had been exposed for 33 winter days to outdoor elements showed the corona starting voltage to be approximately 15 per cent smaller than for a freshly-polished wire of the same diameter. At the same time the average frequency of the oscillations produced with the corroded wire increased while the amplitude showed considerable decrease. It is doubtful whether the pronounced changes in frequency and in amplitude may be ascribed directly to the influence of surface conditions. On the basis of the experimental data it appears more probable that a dirty or corroded surface, due to its unevenness and the presence of sharp points, starts the discharge, and therefore also the oscillations, at a lower voltage. The effect on frequency and amplitude is similar to that of reduced breakdown potential when

TABLE 4

EFFECT OF CAPACITANCE SHUNTED ACROSS CORONA DISCHARGE ON AVERAGE FREQUENCY OF OSCILLATIONS

1	2	3	4	5	6	7	8	9	10	11
Number of Oscillogram	Air Pressure mm. Hg.	Applied 60-cycle Potential volts	Shunted Capacitance $\mu\mu f$	Capacitance of Supply Transformers and Leads $\mu\mu f$	Total Shunted Capacitance $\mu\mu f$	Half Number of Superimposed Peaks	Duration of Negative Corona Discharge mm.	Duration of Complete Period of Applied Potential mm.	Average Oscillation Frequency $f_o = f_a n L/L_c$	Period of Oscillation μ-sec.
	p	E	C_H	C_t	C	n	L_c	L	f_o	T
89	735	8000	500	240	740	11	7.0	67	6310	158
88	...	....	1000	240	1240	10	7.0	63	5400	185
88a	...	....	1000	240	1240	11	7.5	61	5340	187
87	...	....	2000	240	2240	8	6.5	63	3265	306

caused by lowering the air pressure (see Fig. 13) or by increasing the gradient due to changes of the dimensions of the corona tube (see Fig. 15).

24. *Time Effects.*—The effect of time upon the wave form of oscillations was studied at atmospheric pressures. The corona tube was pumped out thoroughly and refilled with fresh air. At a time t_1 a switch was closed in the low-voltage side of the transformer, thus impressing **8400** volts at **60** cycles across the corona tube. An oscillographic record was taken at the same time. The effective voltage was kept constant for five minutes. At the termination of this time t_2 another record of the corona wave form was made. Comparison of the two records showed no change of average frequency, but the amplitudes were reduced slightly. Similar changes were observed with d-c. corona at low pressures, as illustrated, for instance, in Fig. 10 by oscillogram T 33. Many observations have been made of changes in frequency and amplitude occurring with time without apparent variation of conditions. That in such cases conditions did actually change was disclosed by a number of experiments. One source of variation in frequency was found in slight changes of pressure, due to the escape of gas occluded in the electrodes, to leaky stopcocks in the vacuum system, or to the formation of ozone and nitrous oxides by the discharge. With the applied potential adjusted just above the corona starting voltage, it was sufficient to squeeze the rubber tubing which connects the corona tube with the backing vacuum oil pump in order to produce a marked change in oscillation frequency, audible by means of a telephone receiver. Another source of variation in both frequency and amplitude was found in the instability of the corona discharge, especially when the wire was the cathode. It was established by visual observation of the luminous effects that variations of the position, shape, and number of the corona bead discharges were correlated with changes in amplitude or frequency or both. Finally, variations were found to be produced by a slow process of electrode corrosion. Continuous bombardment of the wire by electrons and ions introduces a gradual disintegration of the surface of the wire with effects similar to those discussed in the preceeding chapter.

25. *Effect of Polarity.*—Records of wave forms of oscillations superimposed on positive corona were usually so different from those of negative corona that they appeared to belong to some other unknown type. Experimental evidence was collected which suggested

why the character of corona oscillations must depend on the polarity. One of such outstanding phenomena was the rectifying property of corona discharges based on the different potential required to initiate a discharge, and on the different time rates of building up the conductivity of the gas in the two cases when the wire is cathode or anode.

For high gas pressures higher potentials are required to start the negative corona than the positive. For low pressures the opposite is true. Curves plotted for both cases of the corona starting potential against pressure intersect at a certain point* which indicates that for a definite pressure the positive and negative discharge start at equal potentials. Should, therefore, the starting potential be the main factor which determines the difference in character between oscillations in positive and negative corona it could be predicted that for such a particular pressure oscillograms would show a minimum of inequality in the oscillation wave forms of the two phases of corona.

Evidence of such a relation was supplied by the oscillogram T 19 (Fig. 14). It was taken for a pressure of approximately 0.005 mm. of mercury with a 60-cycle applied potential of 420 volts. This pressure was close enough to the point of equal starting potential to show, as distinguished from all other records, certain resemblances of the oscillations in the positive and negative phases of the corona discharge. Especially striking was the gradual decay of oscillations in both phases when the applied potential exceeded definite values. Observations of the decay of d-c. corona oscillations have shown that when the applied potential is gradually increased, extinction does not occur abruptly, but only after a short period of transition from the disruptive relaxation type of large amplitude into the superimposed type of decreasing amplitude.

The inference which can be drawn on the basis of these observations is that the oscillations due to the positive corona discharge do not represent a distinct type which differs fundamentally from those of the negative phase.

26. *Effect of Chemical Nature of Gas.*—The main factor in a process of ionization by collision which takes place in a corona discharge is the energy required to ionize a gas molecule. Ionization potentials depend on the nature of the gas, and determine the gradients at which the breakdown of the gas occurs. It was manifest throughout the studies described in Chapters IV and V that among

---

*Lee, F. W. and Kurrelmayer, B; Trans. A. I. E. E. Vol. 44, p. 184, 1925.

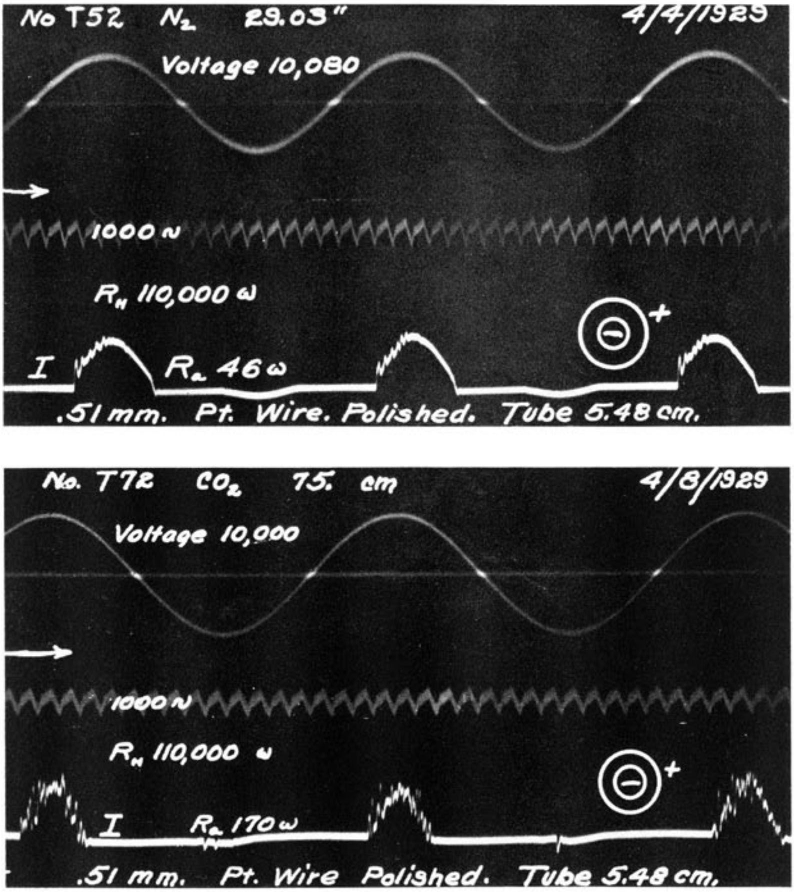

FIG. 17. OSCILLOGRAMS SHOWING EFFECT OF NITROGEN AND CARBON DIOXIDE ON WAVE FORM OF OSCILLATIONS

the different factors which exerted an influence on the corona oscillations the breakdown and the extinction potentials predominated. It was therefore expected that the gas would impress its constitution on the wave trains superimposed on the corona discharges.

Two examples of the many records taken for nitrogen and carbon dioxide are reproduced in Fig. 17. Oscillogram No. T52 was taken for nitrogen at a pressure of 740 mm. of mercury when the small corona tube was subjected to a 60-cycle potential of 10 080 volts. Under these conditions the recorded negative corona humps, which were large as compared with those of the positive corona, were partly covered with superimposed oscillations. No oscillations whatever appeared on the positive corona hump. The frequency was comparatively low, and the wave form was simple.

Oscillogram No. T72 was taken for carbon dioxide at a pressure of 750 mm. with a 60-cycle potential of 10 000 volts. Although the conditions were only slightly different, the corona oscillations differed considerably from those obtained for nitrogen. The negative hump was completely covered with superimposed oscillations, and even the positive corona which just started at this voltage showed distinct oscillations.

Entirely different from both of these oscillograms were the wave forms recorded in oscillogram No. 4 (Fig. 8) for air at a pressure of 740 mm. and with an applied 60-cycle potential of 9900 volts. In this case also the conditions did not differ considerably, but the wave trains of the corona discharge showed no resemblance to the former two records. During the entire discharge the negative hump for air showed oscillations of a higher average frequency than that of the corresponding humps for N_2 and CO_2. The positive humps for air were equal in size to the negative humps, but there was no indication of oscillations except at the very starting moment of the discharge.

All these characteristics, so distinct for each of the three gases, did not remain the same when the operating conditions of the discharge tube were changed. Each set of conditions called forth a variety of distinct wave forms which could not be unified under a general rule.

Two particular properties were found, however, to be common to all three gases. First, it was established that the average frequency of the oscillation is a function of the applied potential, and secondly, that the oscillations disappeared when the applied potential exceeded certain values. Both properties substantiated the assumption that the origin of the corona oscillations in air, N_2 and CO_2 was identical, namely, it consisted in periodic charging and discharging of the capacitance of the corona tube system through a conductance varying in magnitude during the process of discharge.

27. *Multiple Bead Discharges.*—Negative corona discharges for pressures above 1 mm. of mercury appear in the form of visible bead discharges distributed along the wire when the latter is cathode. Stroboscopic investigations revealed that by gradually increasing the

applied 60-cycle alternating potential the number of beads increased, while the distance between them decreased accordingly. The wave form of oscillations connected with such discharges depended on the number of beads. The simplest wave forms were obtained when the discharge consisted of a single bead. Very complex wave forms were observed on the oscillograph screen during the time of transition from one number of beads to the next higher or lower number. The frequency of the damped circuit oscillations due to negative corona discharge was found to be independent of the number of beads. The relaxation oscillations, however, showed marked decrease in frequency with increasing number of beads. The reason why negative corona at higher applied potentials produced more complex wave forms of oscillations than the positive corona was found to lie in the variation of the number of beads with potential during the negative phase, and in the uniformity of glow along the wire during the positive phase of the discharge.

28. *Effect of Cosmic Rays.*—It is known that the starting of some forms of discharges of electricity through gases, like spark and glow discharges, are caused by the motion of a few initial ions present in the gas in its normal state. The source of most of these ions is ascribed to ionization due to rays of extremely high penetrating power which come from outside of the earth's atmosphere.

Remarkable in this respect were records of oscillations obtained for CO_2 in a corona tube subjected to d-c. potential in a circuit shown in Fig. 9. As an example the oscillogram No. T103 is reproduced in Fig. 10. It was obtained with a potential of 1407 volts and 19.5 mm. pressure. Four records, I_1 to I_4 were taken, which show an oscillation frequency of 5416 per second. This frequency, as well as the amplitude, were constant except that occasionally at irregular intervals a sudden increase of a single amplitude by about 20 per cent would take place. Such increased action would be followed by small variations of the next two amplitudes and then the steady state would be re-established. Similar effects were observed for air as recorded in oscillogram No. T33.

Cosmic rays are probably the cause of those sporadic variations of amplitude. The interval of time between the single impacts is determined by the number of intermediate peaks of constant amplitude. Such methods of recording may be used for the study of cosmic rays or other ionizing agencies, and the effect of their impact on the breakdown of gases may be thus investigated.

VI. SUMMARY AND CONCLUSIONS

29. *Summary of Results.*—The results of this investigation may be summarized as follows:

(1) An arrangement was developed and tested for producing oscillations by means of corona tubes in which the circuit oscillations and other types of oscillations could be separated from each other for the purpose of oscillographic studies.

(2) Oscillographic records were obtained which prove that corona discharges give rise to two types of oscillations. One is damped, and its period depends on circuit constants, the other resembles in all respects relaxation oscillations.

(3) The effect of space charges was investigated. It was established that corona oscillations were produced in their absence as well as in their presence. The space charge was found to decrease the starting potential of the corona relaxation oscillations.

(4) The relaxation oscillations have been investigated when corona tubes were subjected to alternating potentials of 60 cycles per second. It was found that the effect of varying the applied potential was to change the average frequency of the oscillations. These oscillations start with breakdown potential, and cease when the applied potential surpasses a certain limiting value.

(5) The frequency of the alternating applied potential (27 and 60 cycles per second) was found to have no measurable effect on the frequency and character of the wave form of corona oscillations.

(6) The dimensions of the corona tube as well as the pressure of the gas within the tube were found to affect the average frequency of the relaxation oscillations, inasmuch as these factors control the breakdown potential of the discharge, and influence the extinction voltage of the oscillations.

(7) The capacitance shunted across the corona tube and the resistance inserted in the circuit affect the average period of the corona relaxation oscillations in the sense required by the theory. The proportionality of the oscillation period with R was established but it could not be established for C, due to the complexity of wave forms imposed by the alternations of applied potentials.

(8) The amplitudes of circuit oscillations were found to increase with applied potential and approach a constant value for very high potentials. The amplitudes of relaxation oscillations showed the opposite tendency. They decreased with increased applied potentials and reached zero for very high potentials.

(9) No time effect could be detected beyond slight changes due to variation of pressure and corrosion of the surface of the wire electrode.

(10) The wave forms of negative corona usually differ from those of the positive phase. It was found that these distinct forms are not due to different types of oscillations, but are connected with the difference in breakdown potentials in the two cases when the wire is cathode or anode. Absence of oscillations, often observed for the positive corona at higher pressures, and for negative corona at lower pressures, occurs whenever the potential exceeds the values required for sustaining relaxation oscillations.

(11) Comparative studies were made of corona oscillations in air, N_2, and CO_2, which show that the chemical constitution of the gas exerts an appreciable effect on the wave form of the oscillations.

(12) Preliminary experiments were made in air and CO_2 in producing oscillations by means of subjecting the corona tube to constant potentials from a battery. Regular and irregular types of oscillations were obtained. The regular type in CO_2 showed at random intervals sudden increases of amplitude which suggested the effect of cosmic rays.

30. *Conclusions.*—The following conclusions may be drawn from these results:

(1) Corona tubes produce wave forms of oscillations similar to those due to ionization in cables and condensers subjected to alternating potentials. Such tubes can therefore be used as models for the study of the fundamental properties of the respective types of oscillations.

(2) The fundamental properties of corona oscillations have been established. Due, however, to the alternating character of the applied voltage, only the average frequencies and average amplitudes of the prevalent types of oscillations could be obtained. Quantitative results may be obtained by extending the investigation to a study of corona tubes subjected to constant potentials. For this purpose photographic records of corona oscillations must be made with a cathode-ray oscillograph. This plan is being carried out so that further results will soon be ready for publication.

(3) The complexity of the wave forms of oscillations obtained with 60-cycle alternating potentials is augmented for higher potentials by the change in the character of the negative corona discharge from

a single bead at low potential to a form of multiple beads for higher applied potentials. It is therefore necessary to extend the studies in the direction of determining the properties of oscillatory phenomena of multiple bead discharges. Such a study is being carried out as a part of the plan mentioned.

This page is intentionally blank.

RECENT PUBLICATIONS OF THE ENGINEERING EXPERIMENT STATION†

Bulletin No. 232. Run-Off Investigations in Central Illinois, by George W. Pickels. 1931. *Seventy cents.*

Bulletin No. 233. An Investigation of the Properties of Feldspars, by Cullen W. Parmelee and Thomas N. McVay. 1931. *Thirty cents.*

Bulletin No. 234. Movement of Piers during the Construction of Multiple-Span Reinforced Concrete Arch Bridges, by Wilbur M. Wilson. 1931. *Twenty cents.*

Reprint No. 1. Steam Condensation an Inverse Index of Heating Effect, by Alonzo P. Kratz and Maurice K. Fahnestock. 1931. *Ten cents.*

Bulletin No. 235. An Investigation of the Suitability of Soy Bean Oil for Core Oil, by Carl H. Casberg and Carl E. Schubert. 1931. *Fifteen cents.*

Bulletin No. 236. The Electrolytic Reduction of Ketones, by Sherlock Swann, Jr. 1931. *Ten cents.*

Bulletin No. 237. Tests of Plain and Reinforced Concrete Made with Haydite Aggregates, by Frank E. Richart and Vernon P. Jensen. 1931. *Forty-five cents.*

Bulletin No. 238. The Catalytic Partial Oxidation of Ethyl Alcohol, by Donald B. Keyes and Robert D. Snow. 1931. *Twenty cents.*

Bulletin No. 239. Tests of Joints in Wide Plates, by Wilbur M. Wilson, James Mather, and Charles O. Harris. 1931. *Forty cents.*

Bulletin No. 240. The Flow of Air through Circular Orifices in Thin Plates, by Joseph A. Polson and Joseph G. Lowther. 1932. *Twenty-five cents.*

Bulletin No. 241. Strength of Light I Beams, by Milo S. Ketchum and Jasper O. Draffin. 1932. *Twenty-five cents.*

Bulletin No. 242. Bearing Value of Pivots for Scales, by Wilbur M. Wilson, Roy L. Moore, and Frank P. Thomas. 1932. *Thirty cents.*

Bulletin No. 243. The Creep of Lead and Lead Alloys Used for Cable Sheathing, by Herbert F. Moore and Norville J. Alleman. 1932. *Fifteen cents.*

Bulletin No. 244. A Study of Stresses in Car Axles under Service Conditions, by Herbert F. Moore, Nereus H. Roy, and Bernard B. Betty. 1932. *Forty cents.*

Bulletin No. 245. Determination of Stress Concentration in Screw Threads by the Photo-Elastic Method, by Stanley G. Hall. 1932. *Ten cents.*

Bulletin No. 246. Investigation of Warm-Air Furnaces and Heating Systems, Part V, by Arthur C. Willard, Alonzo P. Kratz, and Seichi Konzo. 1932. *Eighty cents.*

Bulletin No. 247. An Experimental Investigation of the Friction of Screw Threads, by Clarence W. Ham and David G. Ryan. 1932. *Thirty-five cents.*

Bulletin No. 248. A Study of a Group of Typical Spinels, by Cullen W. Parmelee, Alfred E. Badger, and George A. Ballam. 1932. *Thirty cents.*

Bulletin No. 249. The Effects on Mine Ventilation of Shaft-Bottom Vanes and Improvements in Air Courses, by Cloyde M. Smith. 1932. *Twenty-five cents.*

Bulletin No. 250. A Test of the Durability of Signal-Relay Contacts, by Everett E. King. 1932. *Ten cents.*

Bulletin No. 251. Strength and Stability of Concrete Masonry Walls, by Frank E. Richart, Robert B. B. Moorman, and Paul M. Woodworth. 1932. *Twenty cents.*

Bulletin No. 252. The Catalytic Partial Oxidation of Ethyl Alcohol in the Vapor Phase. The Use of a Liquid Salt Bath for Temperature Control, by Donald B. Keyes and William Lawrence Faith. 1932 *Ten cents.*

Bulletin No. 253. Treatment of Water for Ice Manufacture, Part II, by Dana Burks, Jr. 1933. *Forty-five cents.*

Bulletin No. 254. The Production of Manufactured Ice at Low Brine Temperatures, by Dana Burks, Jr. 1933. *Seventy cents.*

Bulletin No. 255. The Strength of Thin Cylindrical Shells as Columns, by Wilbur M. Wilson and Nathan M. Newmark. 1933. *Fifty cents.*

Bulletin No. 256. A Study of the Locomotive Front End, Including Tests of a Front-End Model, by Everett G. Young. 1933. *One dollar.*

---

*A limited number of copies of bulletins starred are available for free distribution.

†Copies of the complete list of publications can be obtained without charge by addressing the Engineering Experiment Station, Urbana, Ill.

Bulletin No. 257. The Friction of Railway Brake Shoes, Its Variation with Speed, Shoe Pressure and Wheel Material, by Edward C. Schmidt and Herman J. Schrader. 1933. *One dollar.*

Bulletin No. 258. The Possible Production of Low Ash and Sulphur Coal in Illinois as Shown by Float-and-Sink Tests, by D. R. Mitchell. 1933. *Fifty cents.*

Bulletin No. 259. Oscillations Due to Ionization in Dielectrics and Methods of Their Detection and Measurement, by J. Tykocinski Tykociner, Hugh A. Brown, and Ellery Burton Paine. 1933. *Sixty-five cents.*

Bulletin No. 260. Investigation of Cable Ionization Characteristics with Discharge Detection Bridge, by Hugh A. Brown, J. Tykocinski Tykociner, and Ellery B. Paine. 1933. *Fifty cents.*

Bulletin No. 261. The Cause and Prevention of Calcium Sulphate Scale in Steam Boilers, by Frederick G. Straub. 1933. *Eighty-five cents.*

Bulletin No. 262. Flame Temperatures in an Internal Combustion Engine Measured by Spectral Line Reversal, by Albert E. Hershey and Robert F. Paton. 1933. *Fifty-five cents.*

Reprint No. 2. Progress in the Removal of Sulphur Compounds from Waste Gases, by Henry Fraser Johnstone. 1933. *Twenty cents.*

Bulletin No. 263. The Bearing Value of Rollers, by Wilbur M. Wilson. 1934. *Forty cents.*

Circular No. 22. Condensation of Moisture in Flues, by William R. Morgan. 1934. *Thirty cents.*

Bulletin No. 264. The Strength of Screw Threads under Repeated Tension, by Herbert F. Moore and Proctor E. Henwood. 1934. *Twenty-five cents.*

Bulletin No. 265. Application of Model Tests to the Determination of Losses Resulting from the Transmission of Air Around a Mine Shaft-Bottom Bend, by Cloyde M. Smith. 1934. *Thirty cents.*

Circular No. 23. Repeated-Stress (Fatigue) Testing Machines Used in the Materials Testing Laboratory of the University of Illinois, by Herbert F. Moore and Glen N. Krouse. 1934. *Forty cents.*

Bulletin No. 266. Investigation of Warm-Air Furnaces and Heating Systems, Part VI, by Alonzo P. Kratz and Seichi Konzo. 1934. *One dollar.*

Bulletin No. 267. An Investigation of Reinforced Concrete Columns, by Frank E. Richart and Rex L. Brown. 1934. *One dollar.*

Bulletin No. 268. The Mechanical Aeration of Sewage by Sheffield Paddles and by an Aspirator, by Harold E. Babbitt. 1934. *Sixty cents.*

**Bulletin No. 269.* Laboratory Tests of Three-Span Reinforced Concrete Arch Ribs on Slender Piers, by Wilbur M. Wilson and Ralph W. Kluge. 1934. *One dollar.*

**Bulletin No. 270.* Laboratory Tests of Three-Span Reinforced Concrete Arch Bridges with Decks on Slender Piers, by Wilbur M. Wilson and Ralph W. Kluge. 1934. *One dollar.*

**Bulletin No. 271.* Determination of Mean Specific Heats at High Temperatures of Some Commercial Glasses, by Cullen W. Parmelee and Alfred E. Badger. 1934. *Thirty cents.*

**Bulletin No. 272.* The Creep and Fracture of Lead and Lead Alloys, by Herbert F. Moore, Bernard B. Betty, and Curtis W. Dollins. 1934. *Fifty cents.*

**Bulletin No. 273.* Mechanical-Electrical Stress Studies of Porcelain Insulator Bodies, by Cullen W. Parmelee and John O. Kraehenbuehl. 1935. *Seventy-five cents.*

**Bulletin No. 274.* A Supplementary Study of the Locomotive Front End by Means of Tests on a Front-End Model, by Everett G. Young. 1935. *Fifty cents.*

**Bulletin No. 275.* Effect of Time Yield in Concrete upon Deformation Stresses in a Reinforced Concrete Arch Bridge, by Wilbur M. Wilson and Ralph W. Kluge. 1935. *Forty cents.*

**Bulletin No. 276.* Stress Concentration at Fillets, Holes, and Keyways as Found by the Plaster-Model Method, by Fred B. Seely and Thomas J. Dolan. 1935. *Forty cents.*

**Bulletin No. 277.* The Strength of Monolithic Concrete Walls, by Frank E. Richart and Nathan M. Newmark. 1935. *Forty cents.*

**Bulletin No. 278.* Oscillations Due to Corona Discharges on Wires Subjected to Alternating Potentials, by J. Tykocinski Tykociner, Raymond E. Tarpley, and Ellery B. Paine. 1935. *Sixty cents.*

---

*A limited number of copies of bulletins starred are available for free distribution.

UNIVERSITY OF ILLINOIS

Colleges and Schools at Urbana

College of Liberal Arts and Sciences.—General curriculum with majors in the humanities and sciences; specialized curricula in chemistry and chemical engineering; general courses preparatory to the study of law and journalism; pre-professional training in medicine, dentistry, and pharmacy.

College of Commerce and Business Administration.—Curricula in general business, trade and civic secretarial service, banking and finance, insurance, accountancy, transportation, commercial teaching, foreign commerce, industrial administration, public utilities, and commerce and law.

College of Engineering.—Curricula in agricultural engineering, ceramics, ceramic engineering, chemical engineering, civil engineering, electrical engineering, engineering physics, general engineering, mechanical engineering, metallurgical engineering, mining engineering, and railway engineering.

College of Agriculture.—Curricula in agriculture, floriculture, general home economics, and nutrition and dietetics.

College of Education.—Curricula in education, agricultural education, home economics education, and industrial education. The University High School is the practice school of the College of Education.

College of Fine and Applied Arts.—Curricula in architecture, landscape architecture, music, and painting.

College of Law.—Professional curriculum in law.

School of Journalism.—General and special curricula in journalism.

School of Physical Education.—Curricula in physical education for men and for women.

Library School.—Curriculum in library science.

Graduate School.—Advanced study and research.

University Extension Division.—For a list of correspondence courses conducted by members of the faculties of the colleges and schools at Urbana and equivalent to courses offered to resident students, address the Director of the Division of University Extension, 112 University Hall, Urbana, Illinois.

Colleges in Chicago

College of Medicine.—Professional curriculum in medicine.

College of Dentistry.—Professional curriculum in dentistry.

College of Pharmacy.—Professional curriculum in pharmacy.

University Experiment Stations, and Research and Service Bureaus at Urbana

Agricultural Experiment Station
Agricultural Extension Service
Engineering Experiment Station
Bureau of Business Research
Bureau of Community Planning
Bureau of Educational Research
Bureau of Institutional Research

State Scientific Surveys and Other Divisions at Urbana

State Geological Survey
State Natural History Survey
State Water Survey
State Historical Survey
State Division of Plant Industry
State Diagnostic Laboratory (Animal Pathology)
U. S. Geological Survey, Water Resources Branch
U. S. Weather Bureau Station

For general catalog of the University, special circulars, and other information, address

The Registrar, University of Illinois
Urbana, Illinois