8-31-2015

Modeling the controlled delivery power grid

Vinit Madhukar Sahasrabudhe
New Jersey Institute of Technology

ABSTRACT

MODELING THE CONTROLLED DELIVERY POWER GRID

by
Vinit Madhukar Sahasrabudhe

Competitive energy markets, stricter regulation, and the integration of distributed renewable energy sources are forcing companies to reengineer energy production and distribution. The Controlled Delivery Power Grid is proposed as a novel approach to transport energy from generators to consumers. In this approach, energy distribution is performed in an asynchronous and distributed fashion. Much like the Internet, energy is delivered as addressable packets, which allow a controlled delivery of energy.

As a proof-of-concept of the controllable delivery grid, two experimental test beds, one with integrated energy storage and another with no energy storage, were designed and built to evaluate the efficiency of a power distribution and scheduling scheme. Both test beds use a request-grant protocol where energy is supplied in discrete quantities. The performance of the system is measured in terms of the ability to satisfy requests from consumers. The results show high satisfaction ratios for distribution capacities that are smaller than the maximum demand.

The distribution of energy is modelled with graph theory and as an Integer Linear Programming problem to minimize transmission losses and determine routes for energy flows in a network with distributed sources and consumers. The obtained results are compared with a heuristic approach based on the Dijkstra's shortest path algorithm, which is proposed as a feasible approach to routing the transmission of packetized energy.

MODELING THE CONTROLLED DELIVERY POWER GRID

by
Vinit Madhukar Sahasrabudhe

A Thesis
Submitted to the Faculty of
New Jersey Institute of Technology
in Partial Fulfilment of The Requirements for the Degree of
Master of Science in Electrical Engineering

Department of Electrical and Computer Engineering

August 2015

APPROVAL PAGE

MODELING THE CONTROLLED DELIVERY POWER GRID

Vinit Madhukar Sahasrabudhe

Dr. Roberto Rojas-Cessa, Thesis Advisor Date
Associate Professor, Electrical and Computer Engineering, NJIT

Dr. Haim Grebel, Committee Member Date
Professor, Electrical and Computer Engineering, NJIT

Dr. Nirwan Ansari, Committee Member Date
Distinguished Professor, Electrical and Computer Engineering, NJIT

Dr. Hieu Pham Trung Nguyen, Committee Member Date
Assistant Professor, Electrical and Computer Engineering, NJIT

BIOGRAPHICAL SKETCH

Author: Vinit Madhukar Sahasrabudhe

Degree: Master of Science

Date: August, 2015

Undergraduate and Graduate Education:

- Master of Science in Electrical Engineering,
  New Jersey Institute of Technology, Newark, NJ, August, 2015

- Master of Science in Electronics,
  University of Pune, Pune, Maharashtra, India, July 2006

- Bachelor of Science in Electronics,
  University of Pune, Pune, Maharashtra, India, July, 2004

Publications:

- R. Rojas-Cessa, V. Sahasrabudhe, E. Miglio, D. Balineni, J. Kurylo, and H. Grebel, "Testbed evaluations of a controlled-delivery power grid," in *Smart Grid Communications (SmartGridComm), 2014 IEEE International Conference on.* IEEE, 2014, pp. 206–211.

अलसस्य कुतो विद्या अविद्यस्य कुतो धनम् ।

अधनस्य कुतो मित्रं अमित्रस्य कुतः सुखम् ॥

ACKNOWLEDGEMENT

I would like to express my deepest appreciation to Dr. Roberto Rojas-Cessa, who not only served as my thesis advisor and provided all necessary resources for this work, but also his invaluable advice, intuition and time. His unconditional support, encouragement, and patience will always be appreciated. Special thanks are due, to all committee members Dr. Haim Grebel, Dr. Nirwan Ansari, Dr. Hieu Pham Trung Nguyen, who participated as part of the defence committee and also provided their comments and suggestions for improvement from time to time.

Several of my colleagues in the Networking Research Laboratory actively contributed to this work. I would like to thank Yagiz and Sina for all their efforts, time, and support in making this a success. Also, many thanks to Eugene, Divya, Justin for their help and support while performing the experiments.

Finally, a big thank you to the entire staff of the Electrical and Computer Engineering Department and the Graduate Studies Office at NJIT for accommodating my needs and helping me meet all requirements to complete this thesis.

TABLE OF CONTENTS

TABLE OF CONTENTS
(continued)

LIST OF TABLES

Table **Page**

LIST OF FIGURES

LIST OF FIGURES
(continued)

Figure **Page**

CHAPTER 1

INTRODUCTION

In todays world, we live in a paradox when it comes to energy use. On one hand, increasing the consumption of electricity is central to the way we live our lives as electricity powers our homes, offices, and factories; it is used to run communications and entertainment infrastructure, it powers our computers, medical devices, the Internet, and essentially every imaginable technology. Electricity is a versatile form of energy, and is literally available at the flick of a switch. Almost without exception, it has become so reliable that we rarely ever think about it unless the few times where it is not present. Its absence causes millions of dollars of lost revenue every minute, and it could render our homes unlivable if it remains absent for extended periods of time.

On the other hand, the production of electricity, primarily by burning fossil fuels, has resulted in a global phenomenon called global warming. When fossil fuels are burned to generate electricity, a variety of airborne gases and particles are formed. These gasses are released into the atmosphere and are a big cause of air pollution. Among the gases emitted during the burning of fossil fuels are sulfur dioxide (SO_2), Nitrogen Oxides (NO_x), and Carbon Dioxide (CO_2). In 2007, conventional power plants emitted approximately 2,517 million metric tons of CO_2. These 2007 CO_2 figures are 16.4 percent higher than those from 1996 [26]. Growth of these numbers will continue to accelerate as energy suppliers add additional generation capacity to meet an increase in demand.

Figure 1.1 high lights this trend with an average annual increase of one thousand Billion KWh from the years 2002-2012, reaching a high of 19,710 Billion KWh in 2012.

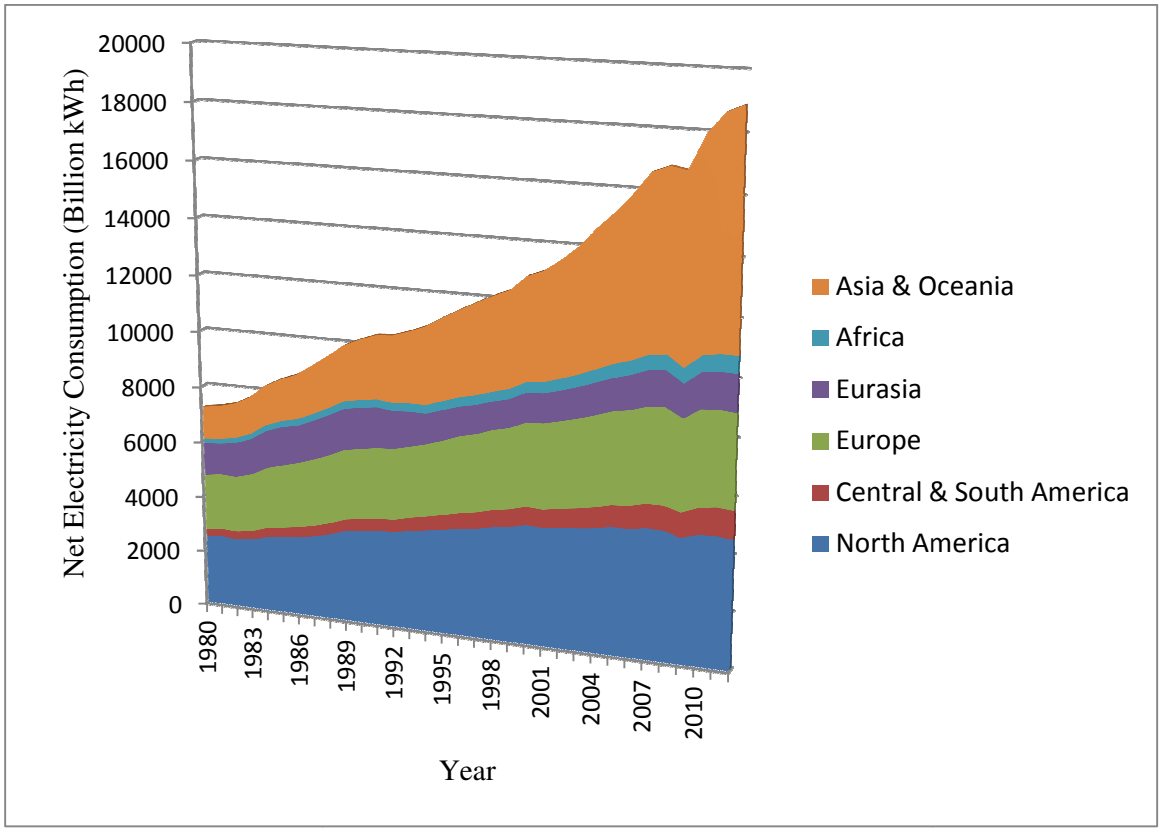

Figure 1.1 World Energy Consumption Trends.

Source: URL: http://www.eia.gov

1.1 Abundance of Renewable Energy

The U.S. Department of Energy reports that the solar energy output of a 100-mile-square area in Nevada could supply the United States with all its electricity needs using modestly efficient (10%) commercial Photo-Voltaic (PV) modules [28]. With sufficient energy storage, solar energy could produce 100% of the energy needs of the world. With enough energy storage, a solar-powered grid would generate enough energy for all existing customers and even new ones [28].

1.2 Energy and the Environment

Many initiatives attempt to resolve energy issues by conserving energy or improving the energy efficiency of existing systems. For example, the smart grid uses a demand-response mechanism to improve the utilization of existing generation capacities of energy [28]. However, as Figure 1.1 shows, the growth in energy demand mirrors the aspiration of an increasingly energy-hungry and demanding customer. While efficiency improvements are essential, the increase in efficiency would be too small to meet the increase in demand. While energy still needs to be supplied to customers, it has to be performed in an environmentally responsible way. A possible solution to meet the increase in demand is to supplement existing energy generation with the use of renewable energy sources. The underlying premise is that renewable energy is abundant and therefore, has the potential to completely replace the use of fossil fuels in the future. However, the generated output of renewable energy is constrained by unpredictable generation output. This issue can be addressed with the use of storage where, in times of over production energy is stored for future use. What is crucial is that we need to transition from a heavy reliance on fossil-fuel-based generation to renewable energy sources (coupled with storage) to meet consumer demand.

1.3 Problems with the Grid

While dealing with energy from existing energy sources, the existing grid has some open issues that need to be addressed. Among them:

- *The grid is susceptible to cascading failures:* The energy grid has been developed with extensive interconnections and grids often spanning over continents. The

purpose of this interconnection is to improve reliability through redundancy, while in fact the complexity of the interconnection increases the risk of wide area failures because any imbalance can be propagated quickly over an ever widening area.

- *Grid stability cannot be maintained with a high penetration of renewable sources:* Although many regions are mandating 20-30% of renewable energy, experts believe that voltage/frequency stability cannot be maintained at such levels if the predominately variable wind and solar generation are used to supply energy [28].

- *Grid capacity is saturated in many locations and requires additional transmission lines:* The cost and environmental impact of new transmission lines is considerable. For grid reliability, transmission assets are sometimes deployed in duplicates, and then used at lower capacity in case of failure. Therefore, the planned under-utilization of expensive assets is wasteful and alternative pathways to assure reliability should use redundancy, as is done in the Internet [28].

While these issues are quite complex, we need to look for solutions to at least some of them. However, two properties of the present grid, *perpetually energized* and *discretionary access* present serious challenges to the integration of renewable energy source in the grid. Keeping the grid perpetually energized allows customers to access and consume energy at any point in time and allows customer to demand discretionary amounts of energy. This property, while beneficial for the consumer, exposes the current grid to potential overloading in surges of consumer demand. As a consequence energy companies maintain wide margins between demand and supply to ensure grid stability and reliability. Tighter

grid stability may increase the efficiency of the grid, and may help increase the penetration of renewable energy sources. Everyday experience shows us that the power grid is fairly stable. To maintain this high degree of stability, energy could be supplied in discrete controlled quantities. This idea forms the basis of the Controlled Delivery Power (CDP) Grid.

1.4 Controlled Delivery Power Grid

The controlled-delivery power grid [10], carries energy in discrete units with each unit of power being a function of time, current, or a combination of both. To control the delivery of energy the electrical signal may carry the source and destination address for the delivery of energy with access being granted only to specific addressed consumers. The CDP Grid uses a shared infrastructure to dispatch units of energy in a local distribution section of the grid. These units of energy may be routed and forwarded as packets of energy. The CDP expects a larger integration of renewable energy sources. This change affects the allocation energy and the management of the grid having to deal with multiple energy sources and the satisfaction of consumer demand by routing energy. We also explore options to partially satisfy the demands from consumers equipped with energy storage and sources with limited generation. In addition, we also look into balancing demand and supply under these scenarios and obtain experimental results to explore the feasibility of the proposed approach.

Finally, we use graph theoretical analysis to model the distribution grid, as a set of nodes and edges, to optimize the distribution of energy among users. The nodes and edges represent generators, distribution points, and consumers.

The remainder of this thesis is organized as follows. In Chapter Two, we present a literature survey of some existing works. Chapter Three presents a more detailed description of the CDP grid. In the same chapter, we also present the experimental results of a test bed evaluation of satisfying energy demand for the CDP grid. In Chapter Four, we present a graph theoretical model for the CDP grid with optimization approaches to route energy in the CDP grid. Chapter Five discusses the conclusions for this work and a direction for future work.

CHAPTER 2

LITERATURE SURVEY

In this chapter, we survey some of the existing works that attempt to solve some of the issues in the generation and consumption of electricity, discussed in Chapter One.

2.1 Open Electric Energy Network

The Open Electric Energy Network (OEEN) is one of the earliest proposals for modeling the transmission of electrical energy, in the form of energy packets. This approach is analogous to mailing packages or letters that are marked with addresses of the sender and the recipient. In the OEEN, the flow of electrical energy is combined with the transmission of data. Integrating data with the energy flows helps identify the source of power, its destination, and pricing information among other things. This data can then be used to control the flow of energy to different section of the power grid. The OEEN introduces the use of the Electrical Energy Router's (EERs). EERs are devices that have the ability to control energy flows based on the routing decisions made by processing the coupled data. Due to the predicted increase in use of distributed renewable sources of energy as sources of energy supply [11, 22] the EER is designed with inbuilt energy storage that can be used in times of a shortfall in energy production. In fact, OEEN as a power supply network proposes flexible utilization of power of varying supply quality that is sourced from both conventional and distributed Renewable Energy Sources (RES).

Restrictions on space utilization in urban areas and the fact that environmental regulators look to impose stringent emission targets for energy generation pose significant

challenges for energy producers. It is a known fact that burning fossil fuels leads to the greenhouse effect (a leading cause of global warming) and this knowledge has forced power producers to find alternate technologies for energy generation. Of particular significance are renewable source of energy such as solar or wind based generation. The use of such small-scale and dispersed power plants is predicted to supply larger portions of energy to meet future demand [11]. However, the variable generation output from RES that could flow into the grid could negatively impact power quality for other users of the grid. As such, RESs have different operating modes, which are based on the equipment they use and the generation characteristics of the underlying technology that is used to generate energy [11]. Additionally, policy liberalization and deregulation has started a global trend for the energy industry. This has resulted in the creation of Independent Power Providers (IPP), Investor Owned Utilities (IOU), and Non-Utility Generators (NUG) (e.g., home owners) [11, 22]. In the future, these entities will create an energy market where consumers buy energy of the desired quality and price. With the adoption of OEEN for distribution of electrical energy, management and coordination between energy generation and distribution has to be carefully sorted to ensure efficient grid operations. Proper planning of operational logistics ensuring the optimum pricing of power without any compromise on its quality (i.e. phase, frequency) for the consumer.

Figure 2.1 shows a representative electrical diagram of the OEEN with its major building blocks. This diagram includes EERs that participate in energy distribution, Load Controllers (LCs) that are placed at points of consumption, and an interconnect used for the AC power distribution and communications for all these devices. The proceeding section discusses the function that these subsystems support as part of their operation in the OEEN.

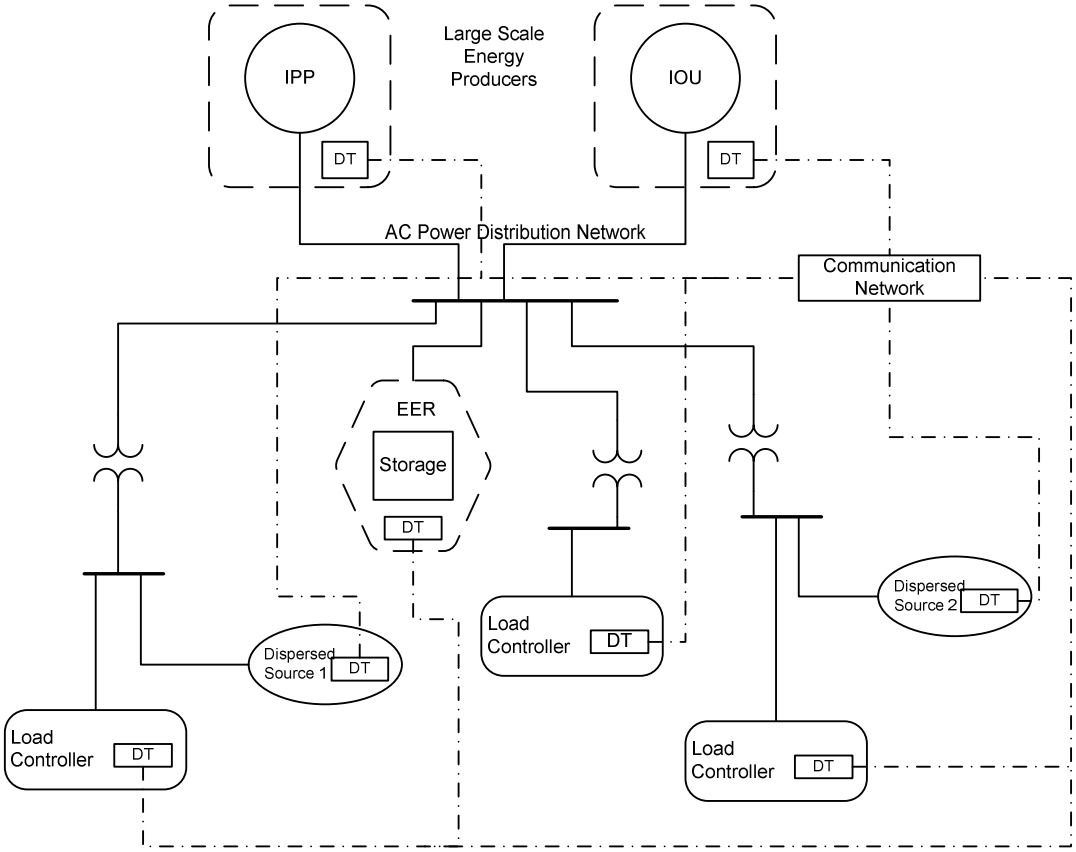

Figure 2.1 System Configuration of Open Electric Energy Network.

Source: J. Toyoda and H. Saitoh. Proposal of an open-electric-energy-network (oeen) to realize cooperative operations of iou and ipp. In *Energy Management and Power Delivery, 1998. Proceedings of EMPD'98. 1998 International Conference on*, volume 1, pages 218–222. IEEE, 1998.

2.1.1 OEEN Subsystems

Electric Energy Router: The EER is responsible for managing the power flows in the OEEN. It modulates the allocation of the generated output using autonomous control to achieve optimum energy flows in the grid. An EER is provisioned with energy storage and is expected to balance the demand and supply for energy by using stored energy in times of need. For example, to counteract the unpredictability in generation output of a wind turbine, strategically placed routers could store excess energy in times of overproduction

and could satisfy local demand during a shortfall in energy output. This prevent cascading grid failures that occur in the present grid due to overloading of the grid.

Load Controller (LC): A load controller (LC) is placed at points of energy consumption which enables individual consumers to buy power of varying quality and price. The flow of data and energy may be collectively visualized as a packet of energy, that is tagged with data and may therefore, is defined as an Electric-Power-Packet (EPP). The data synchronized with every energy flow may provide information such as the location of generators and consumers, demand/supply schedules, reliability data and the price of power. To utilize this data, every LC is equipped with a data terminal (DT). A communication infrastructure is used in addition to the power distribution lines to connect every DT with the grid. Figure 2.1 shows all requisite components such as the DT and communication links that are part of the OEEN.

Wide Area Communication: In the OEEN, consumers buy energy in an open market environment, and suppliers and consumers rely on communication links to execute point-to-point contracts for the supply of energy. Thus, the communication infrastructure crucially links energy producers, suppliers with potential consumers. Additionally, the information contained in EPP may be used to perform optimum routing of energy in a fashion that enhances reliability and minimizes losses in the system. Wide area communication as part of OEEN is a key enabling technology that allows autonomous operation of the power supply network.

2.1.2 Power Flow control in OEEN

The OEEN introduces the energy flow, which is defined in terms of mailing packets of energy. It is important to note that power flow is a continuous function in time and cannot be discrete [11]. Embedding data with energy flows is not deemed feasible, and therefore, the OEEN expects a synchronous transmission of energy and data. Since this flow of data and energy originates at each independent source of energy, it helps identify separate flows of energy. This indentification of flows allows an easy integration of new consumers and energy sources into the grid. In such a system, the EER is tasked with matching generation schedules of power plants with the consumption schedule of consumers. An EER that is equipped with energy storage and has the ability to create its own flows during times a shortfall in generation output. It follows that EER's are tasked with maintain demand/supply equilibrium in the OEEN. But the energy storage as part of the EER, is expected to have a finite capacity and may not cope with large demand variations. Therefore, this work investigated the utility of optimal control theory to compute an feasible energy delivery schedule for energy distribution at the EER.

The optimal control theory problem is described as follows; constrained on storage capacity, the EER is expected to manage the charge/discharge schedules $P_s(t)$ of local storage and match the dispatch of energy packets that follows the generation schedule $P_i(t)$ of a power plant, relative to the consumption schedule $D_n(t)$ of a consumer. A solution to this problem means that the router is able to perform charge/discharge control of local storage while maintaining demand/supply balance assuming the feasibility of routing of EPP $U_m(t)$.

Figure 2.2 shows the flow control as a system of equations where the EER matches the consumption schedule of the j-th customer $D_j(t)$.

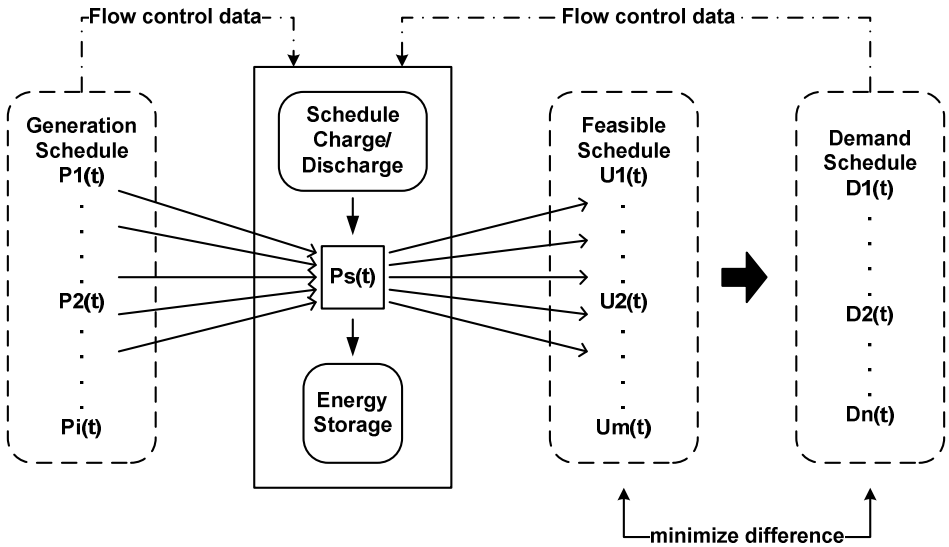

Figure 2.2 Objective Function of Electric Energy Router.

Source: J. Toyoda and H. Saitoh. Proposal of an open-electric-energy-network (oeen) to realize cooperative operations of iou and ipp. In *Energy Management and Power Delivery, 1998. Proceedings of EMPD'98. 1998 International Conference on*, volume 1, pages 218–222. IEEE, 1998.

[Objective] Minimize, for a time interval $[t_0,\ t_f]$, the difference between consumption schedule for $D_i(t)$ of the $j-$ customer, and the actual energy packet $U_j(t)$ sent by the EER.

$$\int_{t_0}^{t_f} L\, dt \tag{2.1}$$

where,

U = $\{U_1(t),\ U_2(t),\ U_3(t), \ldots, U_m(t)\}$

m = consumption points

$P_i(t)$ = generation schedule

$E(t)$ = stored energy

E_{max} = maximum storage capacity

i = total number of generators

2.1.3 Mobile Agent for Power Flow Control

As part of the OEEN, the EER may resort to using mobile agents to automate energy transactions executed between consumers and a supplier. These transactions involve exchanging charge-discharge schedules and energy pricing information, which would be performed in a distributed fashion. Under these constraints, the EER is responsible for matching every demand for energy with a potential source of supply. With a diverse set of participants in the OEEN, and the complexity of the bilateral transactions involved the authors propose the use of mobile agents. This approach is used to automate the transaction setup between the energy producer, supplier, the EER and the LC for a potential consumer.

Power Router Support Agent (PRSA): The PRSA is responsible to compute the charge-discharge schedules for the storage at the EER as it balances power flows between producers and consumers in the grid.

The PRSA performs the following functions;

1. The PRSA as a mobile agent originates at a host EER and travels to neighboring EER in search of potential suppliers and consumers as it acquires their supply

and demand schedules, respectively. Assuming this search is successful at a visited EER, the PRSA determines its next destination based information presented at the current EER.

2. Once the search process is complete, the agent returns to the host EER and computes charge-discharge schedule for local EER storage, based on the information it received during the search process of the demand and supply schedules.

3. The PRSA then moves to the system operator (SO) that performs a load flow analysis and may further tweak the charge-discharge schedule for the EER to balance power flow and prevent grid overloading. It should be noted that this whole process needs to be completed before a power transaction is initiated so that the EER may perform a scheduled delivery of energy to consumers.

Storage Device Management Agent (SDMA): The charge-discharge schedule created by the PRSA creates a single schedule for every EER. It is assumed, for operationally reasons, that the energy storage at the EER actually consists of distributed set of small-scale storage devices [3]. Therefore, a single schedule created by the PRSA may need to be further scaled to the size of the individual storage. This is the done with the use of a SDMA, which creates individual charge-discharge schedules for all connected storage. To compute individual schedules for all connected storage devices, the SDMA performs the following functions discussed below:

1. The SDMA originates at every EER and it acquires the charge-discharge schedule (for storage) created by the PRSA. The SDMA visits all connected small scale storage to participate in energy transactions. These transactions involve the computation of individual charge-discharge schedules for all connected storage.

2. Every individual schedule of a storage unit is based on the current storage capacity and the required charge-discharge capacity, while complying with the larger demands created by the PRSA.

Thus, derived from global information of charge-discharge schedules, the PRSA and SDMA compute local schedules to meet energy supply and storage demand for the grid and storage respectively.

2.2 The Digital Grid

A so called digital grid introduces the concept of segmentation of the power grid into "cells". The cell-based subdivision enables asynchronous exchange of power in the grid. In this approach the flow of energy is tightly coupled with the flow of information that identifies its origin, route, and destination. This information enables the control of the energy flow and presents analogies to the transmission of data packets in computer networks. A key differentiation from previous works is that the digital grid (DG) allows asynchronous operation of cells. As opposed to the uncontrolled flow of energy from generators to its consumers that exists in the present power grid, the DG has Digital Grid Controllers (DGC) and Digital Grid Routers (DGR) and together, these devices coordinate the generation, dispatch and consumption of electrical energy. The use of DGR and DGC introduces the possibility of discrete control over dispatched energy flows in the form of power packets.

Increasing the portion of power sourced from variable renewable sources in the present grid, alleviates the risk of imbalances in power flows, which has the potential to cause cascading failures in the present grid. To overcome this challenge it is important to

measure power levels at several points across the grid and Smart Grid (SG) technologies focuses on measuring power levels at several points in the grid. In the conventional grid the flow of energy is governed by the impedance of the power transmission lines that connect generation plants with consumers. However, to manage the stresses imposed by the increasing integration of RES on the primary sources of power generation (i.e the thermal and nuclear plants), it becomes necessary to control power flows through out the grid. In DG the authors proposes the design of a wide area interconnect that can be subdivided into smaller or medium sized power systems (hence referred to as cells) that are controlled and connected with the use of DGR and DGC, but are asynchronous in their own operation.

2.2.1 Digital Grid Power

In the digital grid, asynchronous coordination is introduced as a method of exchanging power by connecting separate desynchronized AC sub-grids using multi-leg AC/DC/AC conversion using power electronic circuits. Transmitted power is coupled with information, making it possible to distinguish one power flow from another. All devices, from generators to small home appliances, can be addressed. Using Internet Protocol (IP) addresses to identify every device allows direct control from an authoritative DGC's. The AC energy distribution subsystem, as part of the DG, is segmented into cells, and every cell can be connected only via a DGR. Using point-to-point transmission links to join each cell allows greater redundancy for power routes, and at the same time, allow power exchanges across multiple cells. Any failure that occurs in a section of the grid can be contained within the cell where the failure occurred, thus improving grid resilience to cascading failures. Figure 2.3 shows an example of cell-based subdivision of the grid with

interconnect links that join multiple cells through DGRs. A DGR may be connected using two types of links one with power conversion and another without power conversion. These links allow the exchange of power across cells with un-synchronized phases and frequencies.

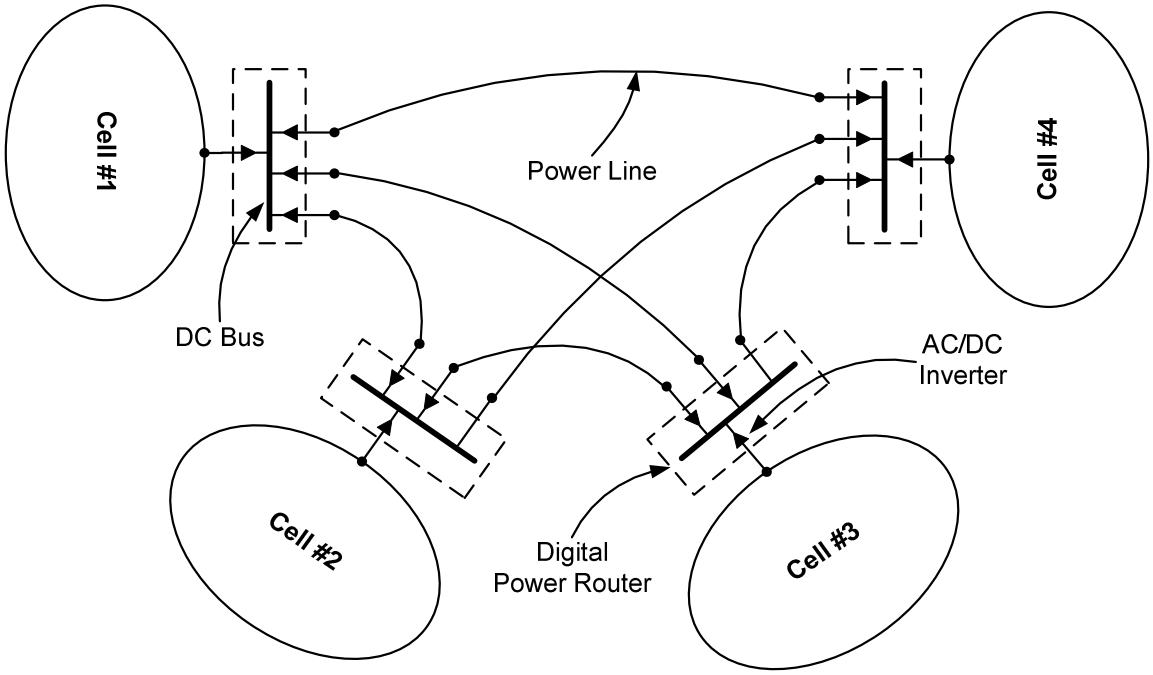

Figure 2.3 Interconnecting asynchronous cells with DGRs.

Source: R. Abe, H. Taoka, and D. McQuilkin. Digital grid: Communicative electrical grids of the future. *Smart Grid, IEEE Transactions on*, 2(2):399–410, 2011.

In the transmission of digital power each packet contains information that includes leading header information, main body of energy, which constitutes the payload and footer information. Both information and power may pass through the same power line, but the information can be separated into two sets such that, one set constitutes simple key signals that pass through the power line and are used for routing energy and the other data set that

contains charge-discharge schedules and pricing information that passes that uses an external data network. DGRs enable coordinated operation and transport of power to remote cells. Figure 2.4 shows an example of the flow of energy in the digital grid, which uses multi-path routing. The figure also shows the frame format used in energy transactions between cells.

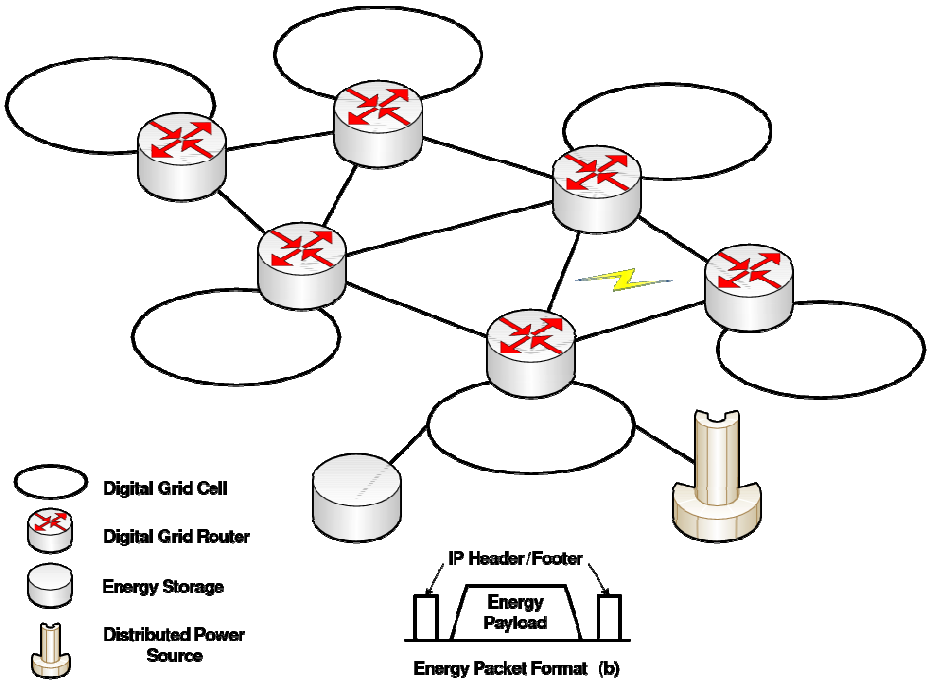

Figure 2.4 Packetized energy flow in the Digital Grid.

Source: R. Abe, H. Taoka, and D. McQuilkin. Digital grid: Communicative electrical grids of the future. *Smart Grid, IEEE Transactions on*, 2(2):399–410, 2011.

2.2.2 Function of the Digital Grid

Support for High Penetration of Renewable Energy: Integrating large portions of renewable energy in the existing power grid is limited as power fluctuations grow too large to maintain synchronization for the whole grid. By segmenting the grid into cells, the

fluctuations of renewable power may be contained in a cell, which is supported by the isolation of each cell performed by the DGR through AC/DC/AC power conversions.

Grid Stability, Redundancy, and Flexibility: In the case of transmission line faults that connect individual cells, power transmission is not restricted to its primary and backup links and can be transmitted using alternate paths. Furthermore, with the focus on increasing the resilience to wide area failures, the celled architecture allows for the synchronous conventional grid and the asynchronous digital grid to coexist. This feature amortizes the high cost of replacing existing infrastructure. Therefore, a large interconnect, coupled with the use of redundant paths to route energy in asynchronous coordination aided by the ability to coexistence with the current grid, eases the concerns of adopting the digital grid.

Packetized Energy with Storage: Every DGR is addressable and integrates energy information with the transmission of power. While not being averse to the use of external data networks, the use of the same infrastructure (i.e used for power transmission) helps avoid inconsistencies in power transactions which would occur when separate data network is used. The concept of routing power with the energy information has been previously proposed in the context of the synchronous grid [11], but does not identify the possibility of routing energy between asynchronous sources which is a key distinguishing feature of the digital Grid. The use of IP addressable links for the DGR also enable "packetized" energy transactions to be executed at will. The increasing penetration of renewable sources would entail the use of large-scale storage so that energy can be

reserved for future use. Packetizing energy enables flexible commercial trading of electricity and the ability to fix the the time of delivery by the user.

Digital Power Trading Energy Exchange: The use of DGR enables the delivery of electricity to the destination by using address and routing capabilities. Energy transactions starts with a broadcast request to find potential candidates. The broadcast outlines trading conditions, quality of active reactive power, time of exchange, trading price, etc. Every DGR reserve energy exchange with one candidate, which is confirmed with the trading conditions. For several exchange requests, it is important to resolve transactions that are optimized for least cost and transmission losses. Routing decisions are made on economic efficiency and physical limitations of connecting links. Energy flows will be monitored by built-in metering devices and recorded together with the reservation information. Thus, the digital grid enables electric energy to be handled as a trade-able commodity, resulting in a energy market, which governs pricing.

2.2.3 Digital Grid Router

Every DGR, used to connect a cell of the digital grid, is configured as single logical unit integrated with multiple parallel terminals that can be used to connect different cells. Together, the power electronics and the communication hardware constitutes every terminal of the DGR. Each DGR terminal rectifies the received power to DC and transmits power by inverting to back to AC. A DC bus is used as a common bus to link all the terminals of a DGR. High frequency Pulse Width Modulation (PWM) controlled by a CPU and/or digital signal processor may be used to establish voltage as well as phase

synchronization, independently from that of the connected cell.

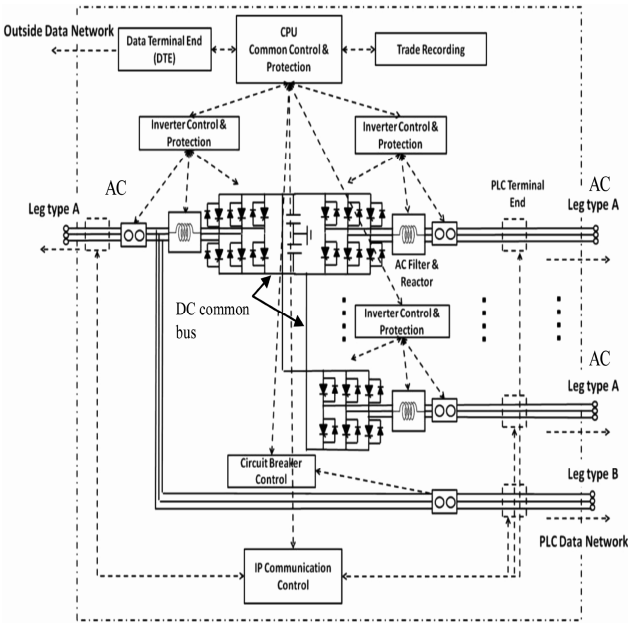

Figure 2.5 Internal Construction of a DGR showing major blocks.

Source: Rikiya Abe, Hisao Taoka, and David McQuilkin. Digital grid: Communicative electrical grids of the future. *Smart Grid, IEEE Transactions on*, 2(2):399–410, 2011.

A DGR shown in Figure 2.5, comprises multiple IP-addressed AC/DC/AC converters linked with a common DC bus. One CPU controls the transmission of both power and information while another controls the connectivity of every DGR's terminal. Energy and information are integrated into a unit and delivered to the coordinated power line. An actual system may have multiple Central Processing Units (CPUs) or Digital Signal Processors (DSPs). When sending AC power, voltage, phase, and frequency are synchronized with that of the remote cell to which this DGR terminal is connected. For AC/DC conversion power electronics such as Insulated Gate Bipolar Transistor (IGBT) or Metal Oxide Silicon Field Effect Transistor (MOSFET) (for lower voltage applications) are used to achieve power conversions. The differences in voltage and phase over the phase

reactor will enable a bidirectional and on-demand active power flow. Both active and reactive power can be controlled independently, and unlike the synchronous grid where load variations cause complex power flows that are difficult to control, in the digital grid it is possible to achieve the requisite control over active and reactive power flows. It is also possible to control power flow among cells with different frequency and phase along with the magnitude of delivered power.

2.3 Power Packets Networks

On the lines of data packets in computer networks, previous approaches discussed energy delivery as packets. The energy flows tagged with information identifies the quantitative (amount, source of generation, and others) and qualitative aspects (price, for example) of the transmitted energy. Such tagged energy flows makes it possible to route of energy from generators to consumers with the use of power routers that are placed intermediate points in the energy network. In computer networks, data packets could experience re-transmissions or may be completely discarded. But in energy networks lost packet leads to energy dissipation may be unacceptable to the energy producer/suppliers. A key feature that is anticipated from the improved power grid is its reliability and resistance to external attacks. These are critical requirements that have not been fully addressed in the existing literature [11, 18] and the authors propose synchronized Quality of Service (QoS) routing for power packet networks as a means to address them in the context of energy distribution or routing.

In the current grid, the flow of energy is governed by physical characteristics of the transmission links (e.g., line impedance). However, in the DG the ability to dispatch power

flows with the use of power routers is expected to prevent arbitrary flows of energy. This control is expected to minimize losses and prevent grid overloading. The DGRs rely on the data that accompanies the energy flows to make decisions for optimal routing of energy flows. With a heavy reliance on this networked data, decentralized control is proposed as a means to improve the reliability and immunity to external attacks. Previous work in the area of allocation of transmission bandwidth for ad hoc wireless data networks using synchronized QoS [7, 12] by the authors is proposed as a mechanism to prevent packet loss. Synchronized QoS routing proposes a end-to-end path reservation scheme from source to destination. This ensures that no energy packets are discarded thus preventing losses due to power dissipation. Every packet is designed to have the same amount of payload and every node comprehends the number of packets to be transmitted or received in each synchronized frame. The complete network is decentralized and each node performs autonomous power exchanges based on information exchanged between neighbors. We shall discuss some of the key features for synchronized QoS for power packet network in the proceeding section.

In synchronized QoS routing, time axis into divided into frames of equal length and each frame is equally subdivided into N energy slots. This frame is synchronized among all end users and routers in the network and energy is transmitted in fixed slots in every synchronized frame. Electric energy packets carry the same amount of energy in every slot and therefore the total power exchanged in each frame is specified by the number of slots occupied by a router. Since the number of packets buffered in every router does not exceed N (i.e., the number of slots in a frame) and the electric energy packet is never discard and packet collision or a buffer overflow never occur in the operation of synchronized power

network [14, 15, 16]. Figure 2.6 shows this frame structure for a single synchronous frame, which in this case consists of five slots.

Electric Energy Router: In the synchronous power packet network, each path for the transmission of power is established through direct connections of cascaded routers. A power transmission path from the power source to the consumer is established by relay circuits constructed using power electronic circuits. The relay circuits perform switching to connect two terminals of a router to enable power transmission during each slot in a synchronized frame. The proposed network includes two router types; the first type with simplified construction can either transmit or receive energy every time slot whereas; the second type can may do both simultaneously. The second type, although complicated in its construction, improves slot utilization which could possibly increase transmission capacity of the network [13]. Another important property to improve slot utilization is the ability of two adjacent routers to perform mutual packet cancellation for bi-directional packet transmissions in the same frame. This property changes energy to unidirectional flows and reduces the number of slots utilized for energy transmission between two neighboring routers [13]. Figure 2.6 introduces the synchronized frame structure that is used for the energy flows in the network.

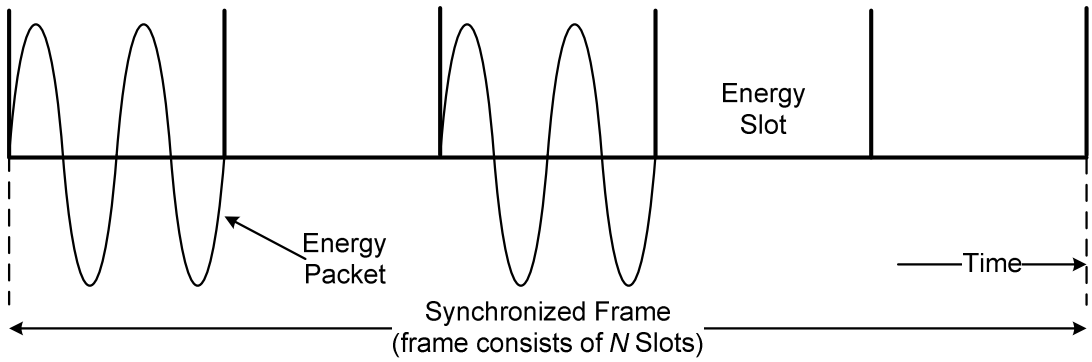

Figure 2.6 Structure of a synchronized frame showing five slots per frame.

Source: H Sugiyama. Direct relayed power packet network with decentralized control for reliable and low loss electrical power distribution. In *Consumer Electronics (GCCE), 2013 IEEE 2nd Global Conference on*, pages 32–36. IEEE, 2013.

The slotted frames follow a decentralized reservation protocol to enable energy flows from consumer to the energy supplier. To ascertain the allocation of energy slots to consumers, each device in the network maintain a power transmission capacity table. This table indicates the allocated capacity in the transmission path to each consumer that can be reserved at any point in time. The contents of this table are updated frequently by exchanging information among neighboring nodes in the network [16]. Figure 2.7 shows a power capacity table that is maintained by every router and updated periodically when any change occurs as a result of a slot reservation for the request of transmission of power. In the table we list the final destination in the *dst* column, *hop* columns list the next hop node and the hop count for the slot respectively. The *slt* lists the total reserved slots for one synchronized frame. The cross and circles under the *Available Slots* correspond to the free ans occupied slots in a frame respectively.

dst	nxt	hop	slt	Avaliable Slots							
				1	2	3	4	5	6	7	8
X	C	6	4	X	X	X	O	O	X	O	O
Y	B	7	2	O	X	X	O	X	X	X	X
Z	B	5	3	X	O	X	X	O	O	X	X

Figure 2.7 Power capacity table.

Source: H Sugiyama. Direct relayed power packet network with decentralized control for reliable and low loss electrical power distribution. In *Consumer Electronics (GCCE), 2013 IEEE 2nd Global Conference on*, pages 32–36. IEEE, 2013.

2.4 Energy Packet Networks

In this section, the authors present a mathematical model for what they call Energy Packet Networks (EPNs). EPNs represent a framework to store and forward electrical energy as Energy Packets (EP). These are discrete units of energy that are analogous to data packets in computer networks. EPNs have the ability to integrate renewable sources of energy in addition to relying on conventional power generation sources. EPNs would cater to a diverse set of industrial, business and residential users and they are coupled with energy storage located at strategic locations in the network. The use of fast ramp-up energy sources is proposed to meet random surges in energy demand. A probability model is used to analyze the satisfaction of requests with the ability to store unlimited amount of energy using storage at strategic locations in the network. The analysis also consider random flows that will be introduced as a result of integrating renewable energy sources (RES) in the EPNs. The effect on satisfying energy flows as a result of failed communication and message losses or delays that degrade system performance are investigated. The theoretical basis for this work uses G-Networks [4]. G-networks are queuing networks used to model the flow of energy packets and their storage. They are also used to model energy flow distribution based on routing probabilities in the network. Finally, the ability of EPNs to

meet the dynamic energy needs of users in the presence of time varying energy production has been discussed. Integration of RES in the power grid is increasing due to a push from from public regulators and also as a result of better incentives on offer to energy suppliers [5]. With the help of energy storage and available demand forecast data it is possible bridge the demand supply gap between the variable output of RES and the demand from energy consumers. EPNs incorporate the use of adaptive energy storage, a distribution and consumption framework to manage user requests with the ability to dispatch EPs from dynamic generators or storage to the points of consumption. Such a system will include conventional power plants, with geographically distributed RES and users with distributed points of energy storage [5].

EPN Model: EPN are modeled as a graph with directed links to create an Energy Distribution Network (EDN). The EDN consists of N sources, M storage centers and K consumption centers. Every link (u, v) of the directed graph has a transport capacity of $C(u, v)$. Thus the link is seen as a unbounded capacity input buffer with a rate of exit capped at $C(u, v)$ EP/sec. Each link has an associated efficiency $0 < (1 - l(u, v)) \leq 1$ which is the fraction of energy added onto the link that reaches its destination. In addition to these nodes, the use of transduction nodes is proposed and their role is limited to participate in routing with no provision for generation or storage, every transduction node has an efficiency such that a small fraction of received energy *l(u)* is lost. Each of the N energy sources (ES) $s(i)$, has a random generation rate $G(i)$ measured in EP/sec, for $i \in 1, \ldots, N$, where $G(i) \leq G_M(i)$ and $G_N(i)$ being the maximum energy production rate of the ES i. Similarly, M energy storage centers (ST) $S(j)$ each with finite storage

capacity $B(j)$ measured in EP's $j \in 1, \ldots, M$ is considered. Each storage center has an conversion efficiency (L_j), $0 \leq Lj < 1$ at its input. The EPN model assumes K energy consumption centers (CC) having a local energy storage facility with an instantaneous storage value of $b(k)$. Considering a steady source of energy C_T that follows a predefined forecast, and the demand for energy follows a stochastic arrival process with the average energy demand represented by D. The model considers a renewable source of energy that provides a random supply of energy at a rate λ_r, this energy is dispatched to a storage unit with a total capacity measured in S units and the storage unit loses energy at a rate μ. Conversion losses during storage result in a loss l which is a fraction of the converted energy L. It is assumed that the re-conversion of energy stored for future use does not exceed α and when this storage is depleted a fast ramp up source supplies energy at a rate β.

A queue QR represents a flow of renewable energy which is modeled with a Poisson arrival rate $(1 - L)\lambda_r$ and it is stored at the storage unit with maximum capacity S. Additionally, queues QD and QS both have a Poisson arrival rate D which represents the unsatisfied instantaneous demand and storage, respectively. When QD is non empty, it generates requests for negative customers [5] from QS which serves the the unsatisfied demand in QD.

The steady state probabilities Q and q given by the equations:

$$Q = min[1, D/\beta + \rho_r[1 - (1 - l)\alpha/\beta]] \tag{2.2}$$

$$q = min[1, \frac{\rho_r}{D/\beta + \rho_r[1 - (1 - l)\alpha/\beta)]}] \tag{2.3}$$

where

$\rho_r = \lambda_r(1 - L)/\alpha$ represents the load factor and,

$0 \leq Q \leq 1, 0 \leq q \leq 1.$

The objectives of the system should satisfy the following properties; Q should be close to zero, so that all excess demand is satisfied and q should approach one, which means that under demand for excess energy there is enough storage to satisfy this need. It should be noted that storage capacity is assumed to be unlimited and losses due to leakage are zero.

To model the effect of an imperfect communication in the system while being able to meed demand, it is proposed that a message sent to the energy storage center is lost with probability $(1 - p)$. The total delay between the instant when the message is sent to the power converter at the storage center is an exponentially distributed random variable with rate δ. It is proposed that when the storage center is empty, consumers turn to the fast ramp-up generator by sending a message. This message is assumed to be lost with same probability as it uses the communication network resulting in a delay for the generator to start producing the required energy. Under such conditions it is obvious that as the probability of reliable message delivery p reduces the probability that energy requests are not met increases. Also, an imperfect communication system results in a sluggish response to meet an increase in demand since renewable sources tend to respond slowly as compared to the fast ramp up sources.

2.5 LoCal Grid

Another concept for the next generation power grid is presented as the LoCal grid. The LoCal grid is designed to contend with challenges in power generation and distribution as discussed and with the expectation of providing improved reliability and stability in energy supply even during peak hours of operation. The authors propose a system architecture that operates as an autonomous unit and behaves as a controllable source or load to external systems. Thus presenting different operating modes with time. The LoCal grid is a collection of loads, energy sources and points of storage that manages its power needs by following a modular approach to its design. The LoCal grid is designed to coexists with the conventional power grid where in times of need it can act as constant source to supply energy to other parts of the grid or as a sink to absorb excess generation. In essence, a LoCal grid is designed to work as a autonomous power system that manages internal and external power flows where the scale of operation is governed by its application. For example, it can start with a single home and may scale up to include a whole neighborhood. The key architectural features that define a LoCal grid are discussed below:

LoCal Networks: The ability to interconnect LoCal grids is used to build scaleable power networks. Designed to accommodate network sizes that can start with individual homes and can scale to municipal scale grids. This allows a community of LoCal nodes to operate as a single independent supply entity. By supplementing this idea with networking concepts that delegates control to the edge of the network rather than presenting a centralized control structure the LoCal grid proposes a peer to peer interconnect. Using any feasible networking topology such as star or mesh to connect LoCal nodes allows the

formation a network of hierarchical LoCal grids. Building a structured interconnect offers other benefits local outages or power failures do not scale to the whole grid and can be isolated and dealt with locally. An essential part of the LoCal network is a communications infrastructure parallel to the power systems. Communication between nodes is necessary to coordinate energy transfers and to meet aggregate needs of a user. Wired, wireless or power line communication may be used to suit particular needs from the communication infrastructure [6].

2.5.1 Intelligent Power Switch

In the LoCal grid an Intelligent Power Switch (IPS) forms the cornerstone for all the functions that the grid provides, integrating the communication infrastructure and power electronics to interface other LoCal or conventional grid. IPS controls power flows with the ability to perform power conversions, while abstracting the local interconnect from the external links. Providing a uniform interface to external entities allows flexible connectivity with consistent view to perform all energy transactions in the LoCal grid. Figure 2.8 shows the architectural interconnect between a network of connected IPS's that isolate underlying interconnects between various sub systems such as power generation and user loads. The use of energy storage in the LoCal architecture enables larger penetration of renewable sources of with the ability to balance peak energy demand. LoCal energy storage demands long working lifetimes, high round-trip efficiency, and low cost of storage.

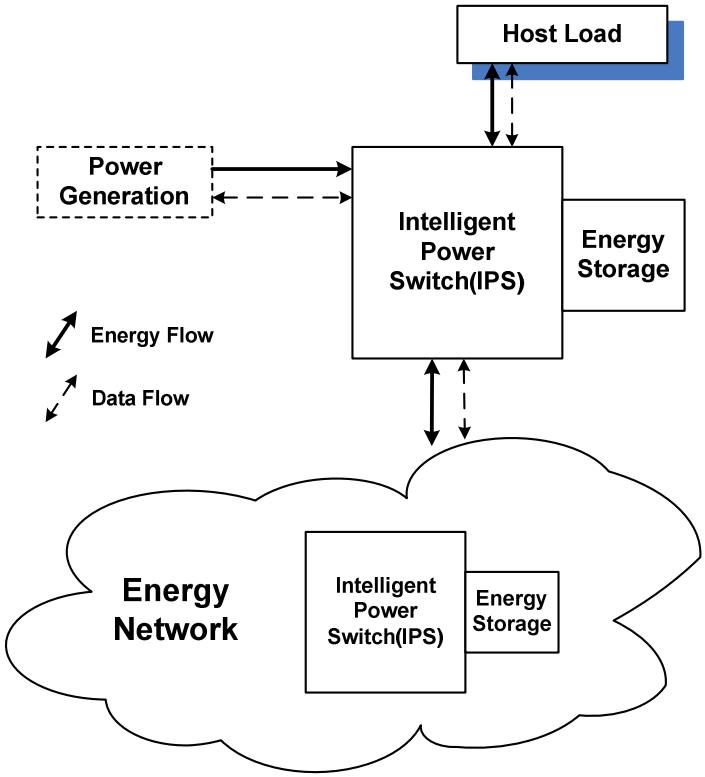

Figure 2.8 Architecture for LoCal Grid.

Source: M. M He, E. M Reutzel, X. Jiang, R. H Katz, S.R Sanders, D. E Culler, and K.Lutz. An architecture for local energy generation, distribution, and sharing. In *Energy 2030 Conference, 2008. ENERGY 2008. IEEE*, pages 1–6. IEEE, 2008.

2.6 Power Packet Dispatch and Routing

Utility companies would increasingly depend upon RES to fulfill demand. The focus of previous work has been to address challenges in generation and distribution in the grid. However, to be able to meet higher satisfaction levels for all users, it is essential to be able regulate energy consumption to maintain grid stability. The regulation of energy usage helps create stable consumption patterns that does not add stress on the grid. With the intent of regulating in-home or in-premise distribution of energy the authors investigate two methods; a circuit switched AC distribution system and a DC power dispatch system based on power packets. Both systems follow the underlying principle of integrating

information with energy delivery. However, building such systems requires high power, low loss and high frequency switching that has only been practical due to recent advances in wide band gap semiconductors built using Silicon Carbide (SiC) or Gallium Nitride (GaN) [20].

2.6.1 Circuit Switching AC Distribution

An experimental demonstration of the circuit switched approach for the AC power distribution has been investigated. This setup validates the concept of power routing for an single wiring indoor system. Two sources of power are used to mimic a conventional and renewable source of power respectively. Two resistive loads are connected via a AC power routing device and each of these loads has the ability to send requests that are received by the routing hardware. The routing hardware also collects information about the power sources based on which it will perform optimal matching between the source and the load. Figure 2.9 shows the major blocks for both components. The information terminal gathers information from all power sources and loads. The AC power router uses this information to control power switches to match a source to a load. The test load for this setup included incandescent and Light Emitting Diodes (LED) light bulbs rated at 30 Watts [19] and this can be scaled to work with multiple inputs. The measured input/output voltages and currents, for sinusoidal voltages shown that SiC switches demonstrate higher efficiency at 99.67% as compared to 80% for MOSFET based switches with switching frequencies approaching 1 MHz [19, 17].

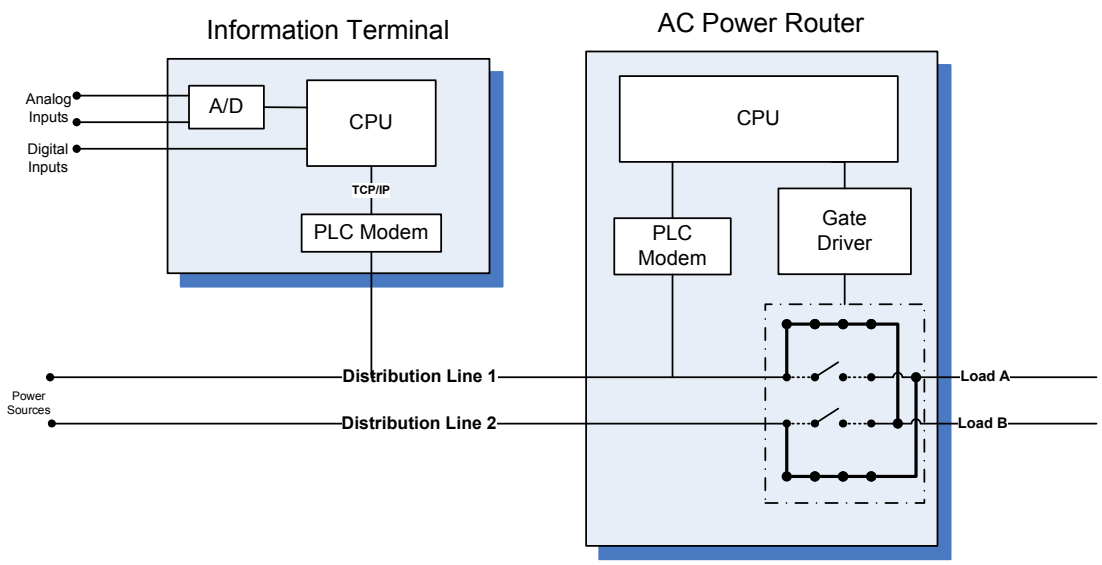

Figure 2.9 AC Power Distribution System.

Source: T. Takuno, M. Koyama, and T. Hikihara. In-home power distribution systems by circuit switching and power packet dispatching. In *2010 First IEEE International Conference on Smart Grid Communications (SmartGridComm)*, pages 427–430, 2010.

2.6.2 Packet Switched DC Distribution

One of the motivations for this work to adopt DC is the improved efficiency that is achieved by avoiding multiple conversions between AC to DC since most of today's appliances use DC power and routing DC power may provide a direct supply of energy while reducing system losses. Figure 2.10 depicts a schematic for a power packet dispatch network. The system consists of multiple sources, multiple loads, a mixer, a router, and single distribution line connecting the mixer and the router. Each device is assigned unique address individually and the system uses for Time Division Multiplexing (TDM) to transmit power from source to load. Therefore, at any instant only one source supplies power to a single load. The supplied power is divided into several units of payload with a header and a footer that are attached to form a power packet.

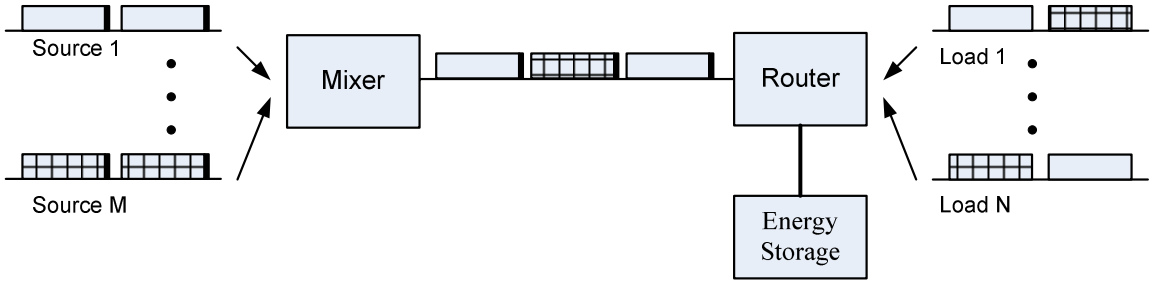

Figure 2.10 Power packet dispatch in a TDM scheme.

Source: T. Takuno, M.Koyama, and T. Hikihara. In-home power distribution systems by circuit switching and power packet dispatching. In *2010 First IEEE International Conference on Smart Grid Communications (SmartGridComm)*, pages 427–430, 2010.

Figure 2.11 shows the concept of a power packet composed of a header, payload, and a footer. The header marks the start signal for the start of the packet and the destination address of the payload it may also include the address of sender. The payload carries actual power delivered to the load. And the amount of supplied power can be regulated by changing the length of payload or modulating its waveform using pulse width modulation (PWM) and a pulse density modulation (PDM) techniques. The payload is followed by the footer which is the end signal. The frequency of header and footer is set at several MHz as compared to the modulation frequency of the payload which is about 10 times lower than that of the header, which works out to several tens to hundreds KHz, and this is done in order to reduce switching losses in the circuits. The amplitude of the payload may differ from the header and the footer as the header and the footer are only used for communication.

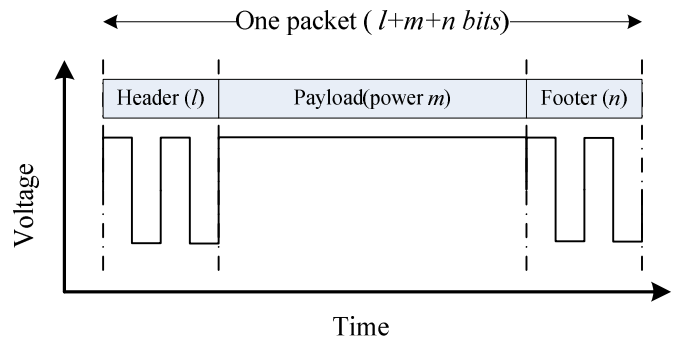

Figure 2.11 Structure of Power Packet.

Source: T. Takuno, M.Koyama, and T. Hikihara. In-home power distribution systems by circuit switching and power packet dispatching. In *2010 First IEEE International Conference on Smart Grid Communications (SmartGridComm)*, pages 427–430, 2010.

The mixer uses TDM to sequence power packets from multiple sources and sends them over a single distribution line adding the header and footer information in the process. Each input terminal of the mixer has a switch to control transmitted power. When the router receives incoming packets, they are sorted according to address in header and sent to the addressed loads. An energy storage is connected may be integrated in a router for buffering packets and/or to smooth power delivered to a load. In the power packet dispatching system the circuit from the mixer to the load is seen as a bistable circuit with ON and OFF states. At the router after reading the packet header the switch is turned on presenting a load to the system and it turns off when a footer is read which effectively isolates the load.

The circuit equations for these two states are given below:

$$\frac{dVout}{dt} = -\frac{R + R_L}{CRR_L} Vout + V \quad when \quad ON \tag{2.4}$$

$$\frac{dVout}{dt} = \frac{1}{CR_L} Vout \quad when \quad OFF \tag{2.5}$$

where, V and $Vout$ indicate source and load voltages and R_L, R, C indicate the load resistance, the interconnection resistance, and the capacitance at the router as a buffer for the power packet, respectively.

Experimental Results: An experimental evaluation of DC power dispatch system resulted in a steady output at the load a well designed buffer at the router with fast switching frequencies ensured that the output voltage ripple is within 5% of the peak output voltage. In the packet dispatch structure a the header and footer have 6 bit data which corresponds to 15 micro seconds each in a packet that is 250 micro seconds long [21]. The output voltages at the mixer were designed to be 12 and 8 Volts, respectively.

Multi-Path Routing: In the preceding discussion, power packet transmission from source to load was executed via a power router that was able to dispatch energy to each load. However, in a networked power interconnect it the interest of improving system tolerance to link failure multi-path routing should be feasible. In the face of link failures multi-path routing provide alternate paths to route energy from source to load [2]. To achieve multi-path routing in a networked power routing infrastructure it is essential to reattach information to a power packet as energy is stored at the router. These enhancements to the network are investigated in [18] allow a power router to transmit power in a multi-hop power network. Additionally, it is suggested that a clock signal be transmitted through a signal cable to synchronize all mixers and routers [2]. Physical behavior of systems was

tested and the feasibility of power transmission with multi-path routing has been conformed where the broadcast power packet from a mixer is successfully delivered to a load via a two stage power router [2, 18]. However, it was observed that loss of synchronization among devices due to effects of signal noise [23] could result in unexpected power transfers [8]. As a solution to mitigate unexpected packet transfers clock synchronization is proposed [2]. The addition of a preamble before the packet header is also investigated [23] with the use of Charge-Pump Phase Locked Loop CPPLL and second order Digital Phase Locked Loop (DPLL) as an accurate clock source is explored [24].

CHAPTER 3

TEST BED EVALUATIONS OF CDP GRID

The CDP grid introduces the concept of controlling energy distribution by supplying power in discrete amounts. The delivered energy is a function of time, current or possibly both these quantities. The amount of energy delivered to a user can be scaled by changing the number of slots a consumer is allowed to draw energy or by controlling the amount of current delivered to the consumer. To control power delivery the use of current limiters, also called smart loads (Figure 3.1), are used, and they may regulate the amount of current in discrete levels. The energy supplier has the ability to control these devices (i.e. smart loads) by embedding information with the delivery of energy. The transmitted energy carries the destination address(es) of a customer (one or many) who are ones that actually access the transmitted energy. Energy delivery in the CDP grid follows a request/grant protocol, where a consumer issues a request to the supplier for discrete amounts of energy that may be fully or partially satisfied (in the same discrete steps) by the supplier. The adoption of controlled energy delivery and grid monitoring capabilities allows a better estimation of consumer demand and prevents discretionary access to energy alleviating the risk of grid overloads under supply constraints.

3.1 Energy Distribution and Grid Management

In the controlled-delivery power grid energy in discrete units, or energy quanta, with each quantum unit of power may be controlled by time, current, or a combination of both. The electrical signal carries the destination address that may be embedded into the electrical

signal. Because energy may be simultaneously distributed to a single or a large number of customers, addressing could be employed.

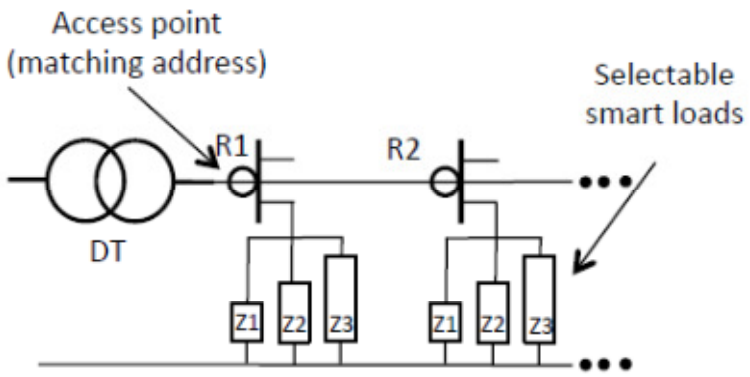

Figure 3.1 Smart load selected by customer.

Source: R. Rojas-Cessa, Y. Xu, and H. Grebel. Management of a smart grid with controlled-delivery of discrete levels of energy. In *Electrical Power & Energy Conference (EPEC), 2013 IEEE*, pages 1–6. IEEE, 2013.

The CDP grid, adopts a shared distribution loop where energy is targeted to specific customers by appending the customers' grid address to the energy, which is called as an energy packet. Distribution points or nodes of the grid, forward energy packets to the end-customer after determining the destined address, which is provided by the local distribution substation. The array of nodes along the distribution segment receives the energy packets, decodes the addresses and forwards the packets to the proper destinations. This equipment is tentatively and coarsely divided into three categories: grid router, power switch, and power access point, in alignment with the different devices used in a data network. Figure 3.2 shows the different components in their placement at various part of the grid [10].

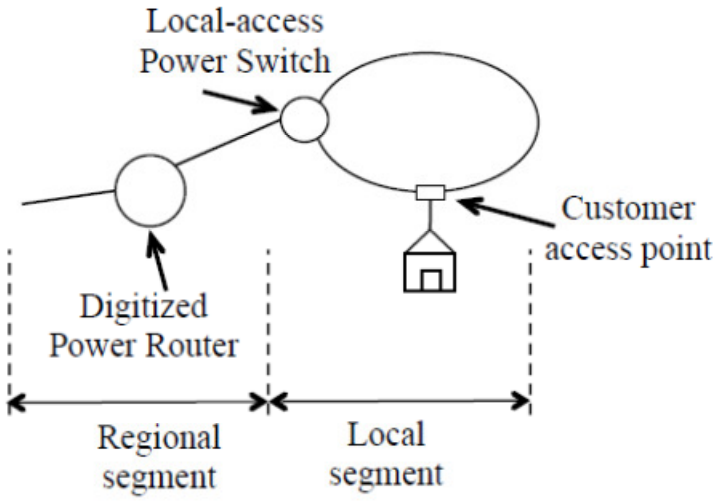

Figure 3.2 Grid interconnect with the associated equipment.

Source: R. Rojas-Cessa, Y. Xu, and H. Grebel. Management of a smart grid with controlled-delivery of discrete levels of energy. In *Electrical Power & Energy Conference (EPEC), 2013 IEEE*, pages 1–6. IEEE, 2013.

The distribution network (Figure 3.3) has a large number of customers. Each of them is able to receive addressed energy and paired with controlled smart loads. Nodes of the controlled delivery grid (labeled as DT in Figures 3.1 and 3.3) adjust the voltage levels, perform signal conversion, and forward the embedded addresses to the signal sent to the end customers (labeled as R1 to R50 in the figure 3.3). The path of data, coupled to the power grid: a) finds the requested energy levels as issued by customers (or local distribution points) and assigns the incoming power to supply those requests, b) finds routing information about where to forward the energy, and c) attaches the destination address and the amount of current for the supplied power for secure and guaranteed delivery. Because energy quanta can be used for each destination (in terms of a single unit), the supply of energy does not need to differentiate the incoming energy (from the generator) but the outgoing one, in a destination (or customer) basis [10].

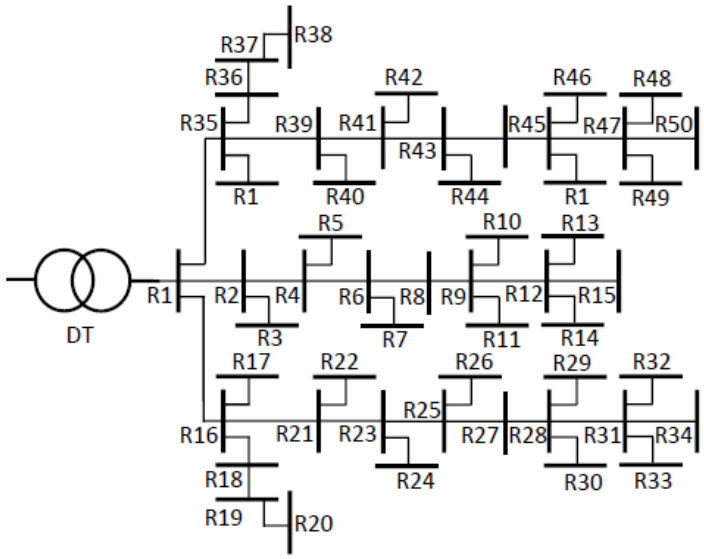

Figure 3.3 Distribution Network in the CDP grid.

Source: R. Rojas-Cessa, Y. Xu, and H. Grebel. Management of a smart grid with controlled-delivery of discrete levels of energy. In *Electrical Power & Energy Conference (EPEC), 2013 IEEE*, pages 1–6. IEEE, 2013.

Every distribution loop has a fixed capacity and the aggregate of customers requests in times of a shortfall in production could exceed this limited capacity. Under such circumstances the distribution point follows a round-robin schedule to satisfy consumer requests. A round-robin schedule ensures fairness among all customers as it follows a predetermined list of participants; such that the last serviced customer has the lowest priority for receiving a new service. The selection is a two-step process where each customer issues an energy request, and the distribution point grants a request if the amount of energy remaining is larger than the requested level (full supply), or if the remaining energy is equal to a lower level or energy (partial supply) [10].

The grid components for the CDP grid use power electronics and computer networks, where power electronics are used to transmit energy packets to destined customers (through the local distribution grid). The power path of the switches must enable routing of energy from inputs to the outputs but at different discrete current levels.

3.2 Grid Components

The CDP grid integrates the use of power electronics with information that allows routing of power packets in a way that is similar to computer networks. A packet of power is created by appending energy with control data and destination addresses etc. The amount of delivered power is controlled with addressed delivery of energy and limited to specific levels of power. To transmit energy via power packets using the distribution grid, the CDP relies on the grid power router, power switches, and Power Access Points (PAP).

Grid Router and Switch: Grid routers form the core of the CDP grid and they participate is transporting energy from the generation plants to the regional and local interconnect segments of the power grid. The grid router need to be able to provide end to end routing with the possibility to find alternate paths for energy delivery. The grid routers may rely on integrated or distinct communication infrastructure in addition to the one used for energy delivery. A switch in the power grid may be used to interface local and regional segments. It works similar to a grid router, with data and power paths, but has limited capabilities to perform routing functions. It is expected to be used as a access node for local loops and the switch aggregates energy request from local segments and forwards them to grid routers. As energy packets flow into the power switch, the energy is forwarded to these segments

Power Access Point (PAP): The Power Access Point is located at the customer premises and is used to access energy from the CDP grid. The PAP communicates with the power switch to send request for energy and also directs received energy to the user. It ensures energy delivery to the consumer by drawing discrete amounts of energy with the use of controllable smart loads. For the energy supplier the PAP resides at the edge of its network where it exercises control and essentially manages to connect every consumer to the network.

Distribution Point: Distribution points in a network transfer energy either from source to consumer or participate in re-routing energy towards other grids distribution points in the network are implemented using routers or switches depending on the function that need to be supported by the distribution point. They perform energy conversions, including voltage step-up and step-down, while interconnecting different distribution segments. The forwarding functions of a distribution point include aggregation of energy packets that are sent to the local distribution loop and distribution of energy where incoming energy packet is split into multiple packets to be dispatched to consumers. While supplying energy in discrete levels, a distribution point may have different sets of transformers that support different levels of current these are when coupled with the smart loads at the customer side transmit energy in discrete levels. These levels of current cumulatively correspond to the energy requested by customers.

3.3 Test Bed for Distribution of Energy in Real Time

Most of today's electrical appliances require real-time and continous distribution of electrical energy to its users (or applications). In such cases, energy packets must be provided continuously. In the proposed controlled delivery power grid, energy is supplied for as long as the demand exsits, as otherwise, interruptions would diminish the utility of such applications or may render them unusable. To emulate this scenario in a testbed, the used light bulbs, which require continuous energy supply to function, are used. Specifically, every user load in the testbed is implemented by two light bulbs, which are rated at 40 and 60 W each. In such a system, the user could request energy in one of four possible discrete levels of 0, 40, 60, and 100 W, respectively. The selection of these loads follows a stochastic process with a uniform distribution. This random function (mimicking a user) and the functions of a PAP are implemented in a low-cost computer, a Raspberry Pi. A user generates continuous requests for the period of time the light bulb is kept ON. These requests are modeled as a two-state Markov modulated process with average ON state β and average OFF time α.

For an experimental evaluation of the efficiency of the power distribution and scheduling scheme, we implemented two different testbeds:

1. One test bed had distributed energy storage, where laptops mimic energy users and their battries represents energy storage.
2. In the second testbed, users have no energy storage so that the energy consumption is discrete and occurs for random periods of time. This testbed was implemented with AC incandescent light bulbs, where the bulbs must be turned ON for a period of time (or continuous time slots) to mimic their actual use.

Figure 3.4 shows the electrical diagram of this testbed and Figure 3.5 shows a picture of the implementation of this testbed.

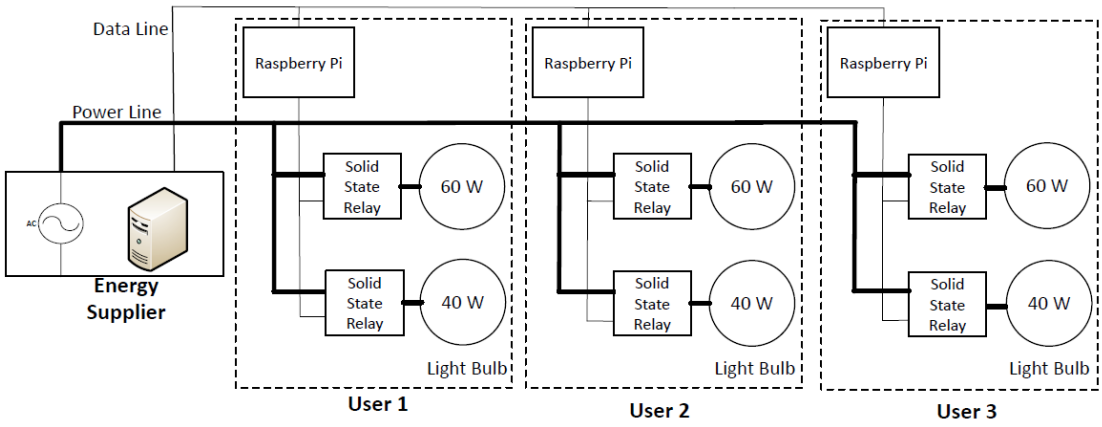

Figure 3.4 Electrical diagram for test bed with no storage.

Source: R. Rojas-Cessa, V. Sahasrabudhe, E. Miglio, D. Balineni, J. Kurylo, and H. Grebel. Testbed evaluations of a controlled-delivery power grid. In *Smart Grid Communications (SmartGridComm), 2014 IEEE International Conference on*, pages 206–211. IEEE, 2014.

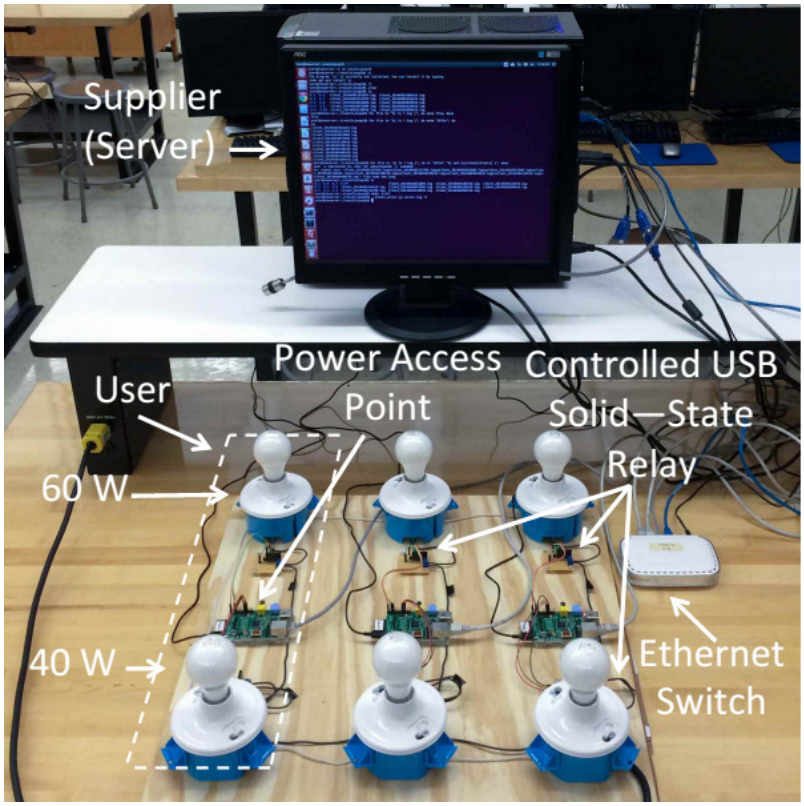

Figure 3.5 Image for test bed with no storage.

Source: R. Rojas-Cessa, V. Sahasrabudhe, E. Miglio, D. Balineni, J. Kurylo, and H. Grebel. Testbed evaluations of a controlled-delivery power grid. In *Smart Grid Communications (SmartGridComm), 2014 IEEE International Conference on*, pages 206–211. IEEE, 2014.

3.4 Request Selection Scheme

Users and the energy provider follow a protocol to request and grant energy. As this testbed works with discrete levels of energy, requests and grants are issued also for discrete amounts. In our testbed, time is slotted. Energy is granted for each time slot (t_s). The time slot duration is $t_s \geq \frac{L}{R}$, where L is the size of a grant packet and R is the transmission rate of the network link carrying the grant packet toward the users' PAP. In our case, we select a time slot duration of 0.5 s while $L = 500$B and $R = 100$ Mb/s. Each time slot, a user sends a grant for a discrete amount of energy to the energy provider with a given probability (as described in Section 3). To keep the appliance (a light bulb in our testbed) in

ON state, the user continuously issues requests until the appliance is to be turned OFF. Appliances that are OFF issue no requests. The service provider broadcasts a grant every time slot. A grant includes the IP address of each user and the amount of energy granted per user. Therefore, to keep an appliance ON, requests must also be issued and granted each time slot.

The selection of users requesting energy follows a round-robin schedule. There is a pointer that indicates the user with the highest priority, and the grants continue to be issued to those users who follow in the fixed order, as long as the user in turn has issued a request. However, if a user is being granted energy at a given time slot and the user continues to issue requests in following time slots, the provider continues to grant those requests to keep the user (and the corresponding electrical appliance) ON. This service model provides continuous grants for the period of time that a user requests. However, the service may remain OFF even if a user issue several requests (depending on the round-robin schedule and on the energy demand by other users) but once the user requests is granted, it remains ON until the user stops requesting more energy. In this way, the round-robin order is applied to users that are currently OFF and issue requests.

Experimental Results: A major advantage of the proposed power grid is that it can control the amount of delivered energy. To demonstrate this, we tested a loop with different power capacities C={100, 140, 200, 240, 280}W. For example, when C=140W, the loop would allow turning on up to three light bulbs (e.g., one 60-W bulb and two 40-W bulbs, or three 40-W bulbs) out of the six available bulbs in our testbed.

Figures 3.6 and 3.7 show the ratio of satisfied requests and the ratio of supplied energy in reference to the requested energy for each of the tested loop capacities. The results show that as the level of requests (i.e., request load) remains constant, satisfaction ratios increase as the loop capacity increases. We categorize request satisfaction ratio and energy satisfaction ratio as the number of request granted, although no necessarily granting the amount of energy requested. For example, if a user requests 100 W and the provider grants 40 W, the request is considered granted. In contrast, the energy satisfaction ratio is defined as the amount of energy requested over the amount of energy supplied. As the loop capacity increases, the satisfaction ratios, for both requests and amounts of energy, increases.

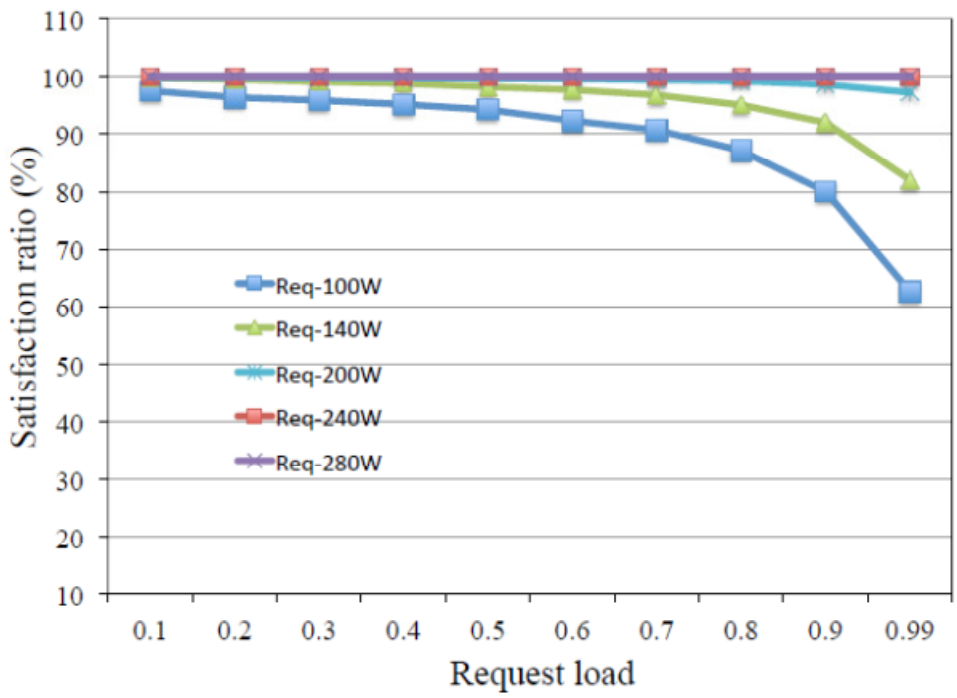

Figure 3.6 Satisfaction ratio of issued requests.

Source: R. Rojas-Cessa, V. Sahasrabudhe, E. Miglio, D. Balineni, J. Kurylo, and H. Grebel. Testbed evaluations of a controlled-delivery power grid. In *Smart Grid Communications (SmartGridComm), 2014 IEEE International Conference on*, pages 206–211. IEEE, 2014.

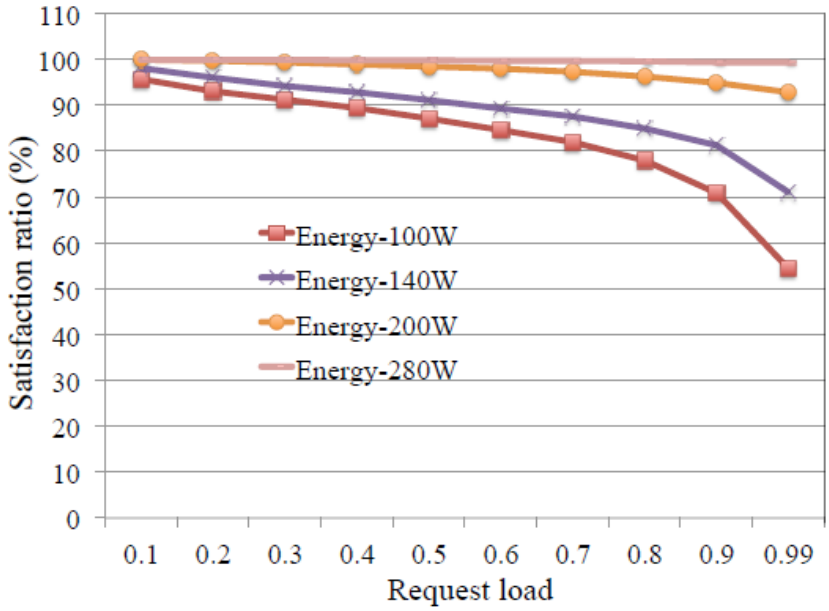

Figure 3.7 Satisfaction ratio for requested energy.

Source: R. Rojas-Cessa, V. Sahasrabudhe, E. Miglio, D. Balineni, J. Kurylo, and H. Grebel. Testbed evaluations of a controlled-delivery power grid. In *Smart Grid Communications (SmartGridComm), 2014 IEEE International Conference on*, pages 206–211. IEEE, 2014.

3.5 Test Bed with Distributed Energy Storage

A way maximize the utilization of limited loop capacity, is to grant small portions of energy to users with energy storage. In this way, energy delivery can be scaled up in time and with the same number of users for a distribution loop the integrated energy storage at the user would store the allocated grants of small portions of energy, which can be used continuously by different user appliances once the amount of the energy stored is sufficient to satisfy local needs of a user. We implement energy storage by utilizing batteries (which mimic storage) and the laptops represent the users. A laptop would issue energy requests at the rate of one per time slot, and the energy provider may issue grants for each time slot. However, rather than requesting energy at random, in the testbed with no energy storage, laptops request energy after their battery crosses a set threshold of energy.

Figure 3.8 shows the diagram of the experimental setup and Figure 3.9 shows the diagram of the setup used in the experiment. This setup includes three laptops connected through a controllable delivery grid and a server which grants these requests for energy.

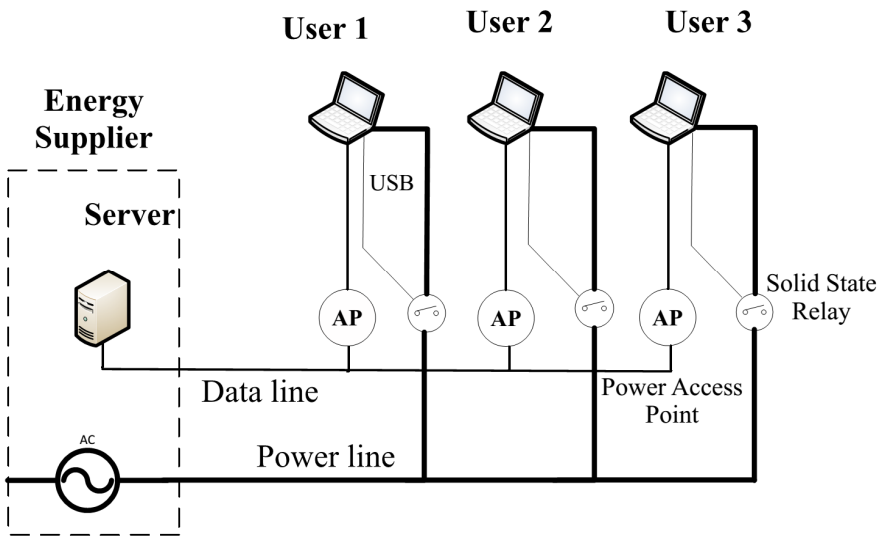

Figure 3.8 Diagram for test bed with storage.

Source: R. Rojas-Cessa, V. Sahasrabudhe, E. Miglio, D. Balineni, J. Kurylo, and H. Grebel. Testbed evaluations of a controlled-delivery power grid. In *Smart Grid Communications (SmartGridComm), 2014 IEEE International Conference on*, pages 206–211. IEEE, 2014.

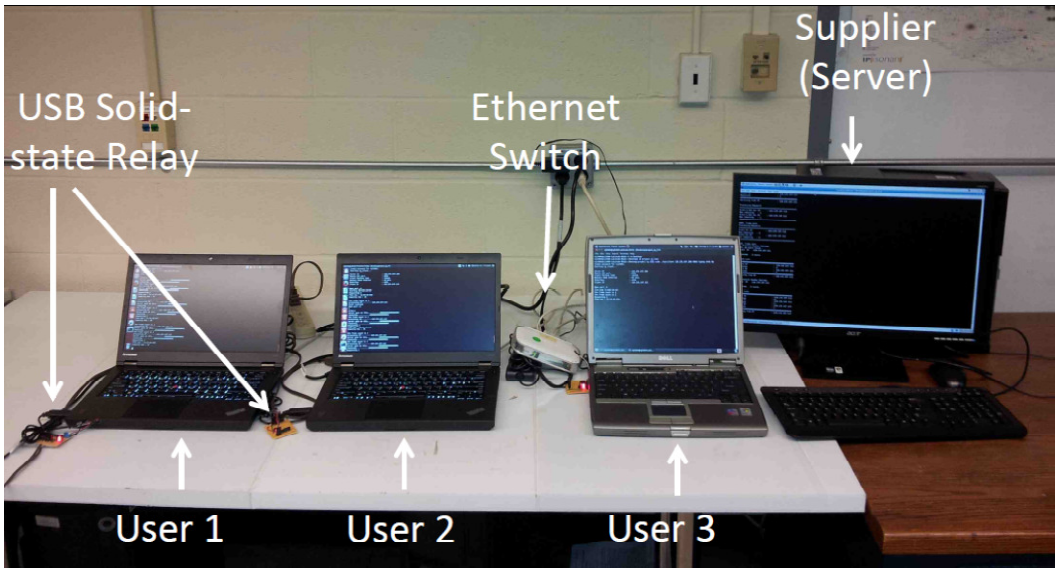

Figure 3.9 Image for test bed with storage.

Source: R. Rojas-Cessa, V. Sahasrabudhe, E. Miglio, D. Balineni, J. Kurylo, and H. Grebel. Testbed evaluations of a controlled-delivery power grid. In *Smart Grid Communications (SmartGridComm), 2014 IEEE International Conference on*, pages 206–211. IEEE, 2014.

In this testbed, each laptop communicates with the energy provider through a Gibabit-Ethernet network. The time slot in this testbed must be set long enough to allow the battery to store the supplied charge. Therefore, we set a time slot to sixty seconds. The provider issues one grant to each user for every time slot. This relaxed timing causes very small traffic load in the data network as the energy provider broadcasts a single grant every time slot. Each laptop includes a software implementation of the PAP, which issues energy requests to the provider and checks for destination address and amount of energy granted. To provide access to the power line, a laptop is paired with a solid-state switch, which is controlled by the PAP by using a signal sent through laptop's USB port.

The energy requests and grants in this testbed are different from those used without energy storage. We used two thresholds: a high threshold Th_h, and a low threshold Th_l. If the level of energy of the battery, B_L is above Th_h ($B_L > Th_h$), a laptop issues no request

for energy. If $Th_l < B_L \leq Th_h$ then, a laptop issues a request for energy during half the duration of a time slot. If $B_L \leq Th_l$ then the laptop issues a request for energy for a complete time slot. Table 3.1 summarizes the different energy amounts and thesholds, in terms of the amount of time neeed to access to the power line, used by the laptops. The laptops attempt to keep the energy level to 70% and request moderate amounts when the battery's level approaches it.

The amount of energy requested to the supplier depends on the frequency in which requests are issued, the amount of power (which is converted into a period of time in which the laptop's battery is connected to the power line) requested in each request, and the number of users. As the battery energy level approaches the target energy level in the battery (e.g., 70%), a laptop may request less energy until it stops. When the battery's energy is depleted below a minimum threshold, the laptop starts requesting energy again. In this request scheme, we target a battery energy level of 70% charge, which is reached after stabilizing. It should be noted that the target energy level of the request scheme is to keep the battery charged at that level, rather than making energy consumption highly efficient.

Table 3.1 Request Selection.

Battery level	Request	Requested
P_b	Frequency	Energy
$P_b \geq 70\%$	0 Req/t_s	0 W
$70 > P_b \geq 50\%$	0.5 Req/t_s	0.5 W
$P_b < 50$	1 Req/t_s	1 W

The grants issued by the scheduler of the energy provided in this testbed follow a round-robin schedule, irrespective of whether requests are issued for 0.5 or 1 W of energy, every time slot. Since, there is an energy storage device, there is no priority on the requests or the users that have been granted energy. For each time slot, a set of user grants are selected anew. Therefore, it is possible to provide energy to the battery of the laptops intermittently. It must be noted that use of energy storage simplifies the grant scheduling scheme.

Experimental Results: The experimental results are shown in Table 3.2. These results show a high Request Satisfaction Ratio (RSR) and the Energy Satisfaction Ratio (ESR). Users 1 and 2 have fast-charging batteries so they need fewer time slots to achieve the 70% level goal. They issue a smaller number of requests than User 3 and their RSR is 100% in most cases. As for User 3, the battery is less efficient and it needs a larger number of time slots to achieve this goal, and yet the achieved RSR is 98.84%. As for the ESR, all users spend energy during the normal course of the laptops operation and the time in which they detect

battery levels. The achieved ESR is over 99% for User 1 and about 99% for the other two Users. The charge of the batteries of all three users eventually reach and stays around 70%, using only 2 W per minute. It should be noted that without the controlled-delivery grid, the power line would have to supply 3 W all the time. It is expected that as the number of users increases, the efficiency of the controlled-delivery grid would also increase.

Table 3.2 Results for Request Satisfaction.

Loop	Target	User					
Capacity (W)	Charge	Identification					
		1		2		3	
		RSR	ESR	RSR	ESR	RSR	ESR
	70%	100	99.72	100	98.17	98.84	98.45

3.6 Conclusions

We presented the application of the controlled-delivery power grid where energy is supplied after a request-grant protocol, which allows the energy provider allocate and schedule the delivery of energy to requesting users, in the form of packets. In this new grid approach, scheduling of energy packets enables a delivery on continuous or intermittent modes of operation, which is decided based on the ability to store energy at the consumer. We show the functioning of the grid under these two scenarios in the presented test beds: one with energy storage, emulated with laptops and their batteries, and the other without

energy storage, shown by the supply to incandescent lamps. The experimental performance of the two test beds, in terms of the capability of satisfying user requests, or satisfaction ratio, is high for capacities that are smaller than the maximum energy.

CHAPTER FOUR

ROUTING ENERGY IN THE CDP GRID

In the test bed experiments, for the Controlled Delivery Power (CDP) Grid, we explored the possibility controlled delivery of energy to users in discrete quantities by modifying the duration for which a load draws power from the grid. In those experiments, the delivery of energy takes place over a single link that directly connects the source to each load. However, in the CDP grid, energy generation is distributed over a large number of participants, in the form of rooftop solar panels, wind turbines, community micro-grids, and the conventional fossil-fuels-based generators. These diverse generators may participate in supplying energy to a local neighborhood that consists of a number of households and commercial establishments. The set of interconnections formed by generators, grid nodes (which are power routers in the CDP grid), and consumers can be modeled as a directed graph with edges representing distribution links and nodes representing sources or energy suppliers and sinks or consumers. The objective of this model is then to optimize the distribution of energy from multiple sources to multiple sinks or destinations.

For sake of description, we start the modeling of energy allocation and route calculation for the distribution of energy in the CDP with a simple graph with a couple of energy suppliers and a few consumers. With the use of Integer Linear Programming (ILP) and a heuristic modification of the popular Dijkstra's algorithm we perform routing calculation and energy allocation at the sources. We solve the minimum cost flow problem to minimize losses in the distribution of energy in the CDP grid. While the ILP method

provides a global solution about the optimized costs, the modified Dijkstra's algorithm provides a heuristic to install flows in a distributed fashion that has the ability to split the demand into separate flows with smaller complexity.

4.1 Integer Linear Programming Formulation

To model the graph, we use an Integer Linear Programming (ILP) approach. We start by defining the graph and then building the set of equations to solve the minimum cost flow problem as an ILP problem. Let us look at some basic definitions for the graph theoretical model.

Consider $G = (V, E)$ be a directed graph with two special vertices: a source s and a sink t. Here, $u \in V$ is a node in the set of nodes V and edge $(p, q) \in E$ in the set of edges E. Every edge has a capacity $cap(p, q) \geq 0$ and a weight or cost associated with that edge. The cost and the capacity characterize each edge in the graph. These weights indicate the cost of adding a flow between two neighboring nodes and the maximum capacity that one or multiple flows can occupy on that edge. A flow is a real-valued function on edges that occupies a portion of the capacity of a link and it is indicated as $f(p, q)$. The capacity of an edge is $cap(p, q) = 0$ if (p, q) is not an edge that connects two neighbor nodes. The three properties that characterize a flow are as follows:

- Capacity constraints: $f(p, q) \leq cap(p, q)$, if $f(p, q) = cap(p, q)$ we say that edge (p, q) is saturated.
- Flow conservation (at transport nodes): $\sum f(p, q) = 0, \forall p \in V - \{s, t\}$. This property states that all flows that enter a transport node, exit the node.

We solve this problem by using the GNU Linear Programming Kit (GLPK) package [53] is intended for solving linear programming (LP) problems.

The set of equations to model the graph consists of an objective function, the list of variables, and a set of constraints. The objective function is defined as follows:

Objective function:

$$\min \sum_{(i,j) \in E} dijxij \tag{4.1}$$

Subject to:

$$\sum_{j:(i,j)\in E} xij - \sum_{j:(j,i)\in E} xji = 0 \tag{4.2}$$

$$0 \leq xij \leq \max \text{cap}(i, j), \forall (i, j) \in E \tag{4.3}$$

$$\sum_{j:(i,j)\in E} xij - \sum_{j:(j,i)\in E} xji = P, i = p \tag{4.4}$$

Where *dij* is the path from generator and the supplied consumer and *xij* is the loss in the transmission of energy.

Equation 4.1 defines the cost minimization function and Eqs. 4.2 and 4.3 represent the conservation of flow for the transport nodes and the capacity constraint for each link, respectively. Finally, Eq. 4.4 defines the insertion of flows at the source nodes in the graph, where *P* represents the generation capacity of the source or power plant.

As discussed above, we model the transmission of energy in the CDP as a minimum-cost flow problem. As an example, in our description, we use the graph shown in Figure 4.1. This graph has three energy sources; nodes 1, 2, and 3, where each source has a generation capacity of 35, 45, and 20 power units (these units can be considered as units of power), respectively, resulting in a total of 100 power units available to the two consumers. There are two consumers, nodes 10 and 11, as indicated in Figure 4.1, where each

consumer has a demand for 50 power units. Each edge in the graph is represented by a cost and capacity to indicate the cost of routing energy through that flow and the maximum capacity that each link can occupy. With three energy suppliers and two consumers all other nodes are transport nodes, with an originating net flow of zero. To simplify the integration of flows in the ILP problem for simultaneous resolution, we resort to using a virtual node. The virtual node zero is modeled as a source to convert the graph to a single source problem. By installing strict flow constraints on the outgoing edges from the virtual source to the real sources represented by nodes 1, 2, 3 via edges *x01, x02,* and *x03.* In this way, we ensure the energy flows from the virtual node to the real sources.

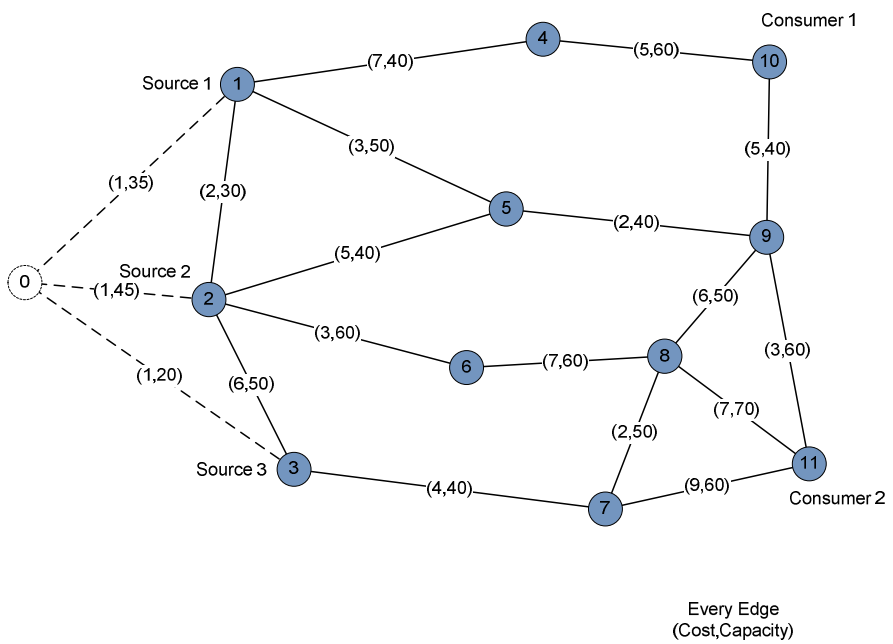

Figure 4.1 Sample graph to model the grid.

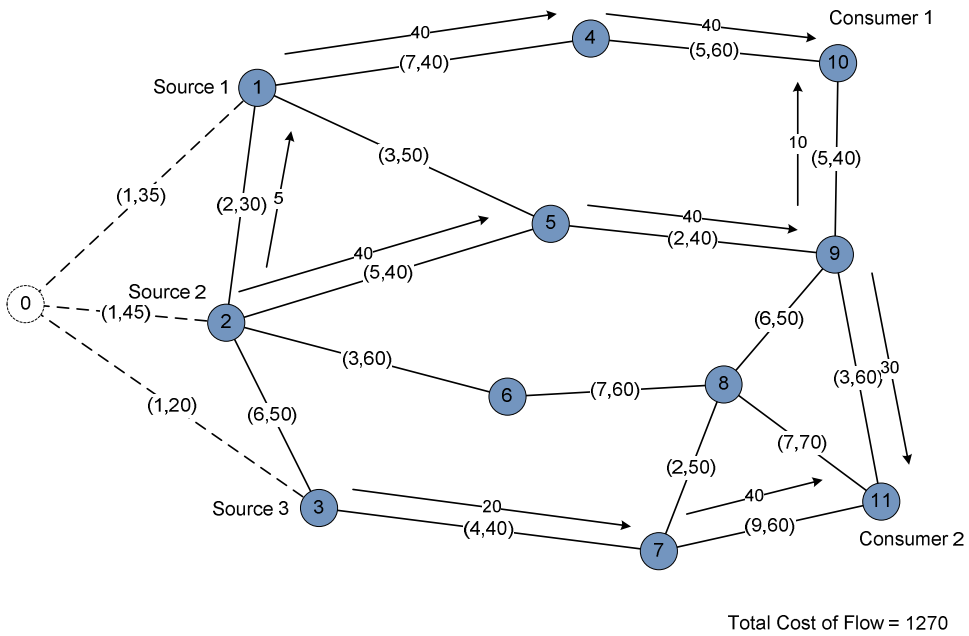

Figure 4.2 Linear Programming Solution for the sample graph.

The final cost of routing energy in the graph from all sources to the destination is calculated to be 1270 loss units. The calculated cost is a product of the installed flow in each link with the cost of routing on that link. Figure 4.2 shows the actual flows, marked with arrows, on the used links that result after running the code in the GLPK toolkit.

Although the LP model of the grid converges onto an optimal solution for energy allocation in the presence of multiple energy sources and consumer, we expect that complexity will largely increase for a very large number of nodes. Therefore, we focus on developing a heuristic approach; a Dijkstra-based method. Finally, we compare the results obtained with the Linear Programming approach with those of the modified Dijkstra's Algorithm, and compare the final costs.

4.2 Modified Dijkstra's Algorithm

The shortest path from a source node to a destination node in computer networks is obtained by the Dijkstra's algorithm. This algorithm is an effective approach for finding a solution in networks that have non-negative link cost values, as compared with the LP optimization approach. In the Dijkstra's algorithm, nodes in the network are divided into three types of nodes, which are: a visiting node, a visited node, and an unvisited node. At the initial stage, the source node is set as a visiting node, and other nodes are set as unvisited nodes. Set the distance to zero for the source node and to infinity (∞) for all other nodes. The distance between the nodes adjacent to the visiting node is computed by adding the cost of the link between the visiting node and each adjacent node to the distance of the current node. Next, select the next node to visit. Repeat the process until every node in the network becomes a visited node. This process yields the shortest paths from the source node to all nodes in the network.

In the graph, we have additional constraints on the link capacities. Furthermore, the flow to a destination may be partially met by a supply from different sources. The sources may be selected to minimize the transmission loss while accommodating the link capacity constraints. This property of the CDP is the major differences between routing in the CDP and that in computer networks. The heuristic algorithm performs as follows:

Starting from a destination vertex for a set demand and moving towards a potential source via the shortest or the least-cost path to satisfy all energy demand of a customer, and the selection of a path progresses in the search of a potential supplier as it moves through the network. The objective is to minimize the cost of satisfying demand. The process of selecting a path must allow splitting the demand into separate flows, by selecting separate

sources, over paths that are reserved on every subsequent links/edges from source to destination with the lowest cost. In a multi-source graph, every destination node maintains a shortest path to every potential source.

Every destination reserves a portion of the link capacity between two adjacent nodes to install a flow over the selected path from a source to a destination. The reservation process proceeds link by link and it aborts if encounters that the capacity of a link is fully reserved by a separate flow.

After each reservation, link capacities of selected links are updated to reflect the residual capacities after a flow is installed. For example, if a portion of a link capacity is allocated to a flow the capacity of the link, the cost of the link becomes infinity (∞), and the edge representing this link can no longer participate in the routing energy for subsequent reservations. In this case, we shall consider the link to be open till the time the installed flow releases the edge.

During the search from destination to source for the least-cost path, the smallest of all capacities available from all the intermediate edges along the path is reserved to route the flow. Furthermore, a demand can be split into separate flows to be satisfied. If the demand is not fully satisfied by the selected path, due to a link capacity constraint, the next least cost path from a source destination is used. Similarly, if a demand is not completely satisfied by a single source, a new flow is installed from another source to satisfy the residual demand.

The algorithm stops when no further installments can be made, the demand is fully satisfied, or the graph degenerates to a disjoint set of edges or links with no feasible route to transport the energy. To remove a flow after the satisfaction of demand, the destination

removes the flow and all node capacities are updated to reflect new values. The pseudo code of this algorithm is described as follows.

Listing 4.1: Pseudo code for flow insertion in a graph.

```
1      function Dijkstra(Graph, source, target):
2      //Initialize
3      dist[source] → 0// Distance from source to (same vertex
in graph) source
4      prev[source] → NULL         //   Previous   node   in
optimal path initialization
5      capacity[source] → infinity //  Maximum  of  minimum
capacity that than be allocated
                         // for all visited vertices.
6      for each vertex v in Graph:           //
Initialization
7          if v → source:           // Where v has not yet been
removed from Q (unvisited nodes)
8              dist[v] → infinity            //      Unknown
distance function from source to v
9              prev[v] → NULL           // Previous node in
optimal path from source
10         end if
11         add v to Q                        //  All  nodes
initially in Q (unvisited nodes)
12      end for
13
14      while Q is not empty:
15         u → vertex in Q with min dist[u] //  Source  node
in first case
16         if u = target break;
17       remove u from Q
18         for each neighbor v of u:             // where v
is still in Q.
19             alt → dist[u] + length(u, v)
20              if alt < dist[v] && flow(u, v) > 0:    // A
shorter path to v has been found
21                 dist[v] → alt
22                 prev[v] → u
23            if flow(u, v) <= capacity[v]//allocate as much
as possible and update
24             capacity[v] = flow(u, v)     // new minimum
allocated capacity
25             if flow(u, v) = 0
```

```
                remove u from Q
              end if
            end if
            //no constraint on capacity, allocate as much as possible
            flow(u, v) = flow(u, v) - capacity[v]
              end if
          end for
      end while

      return dist[], prev[]

  end function
```

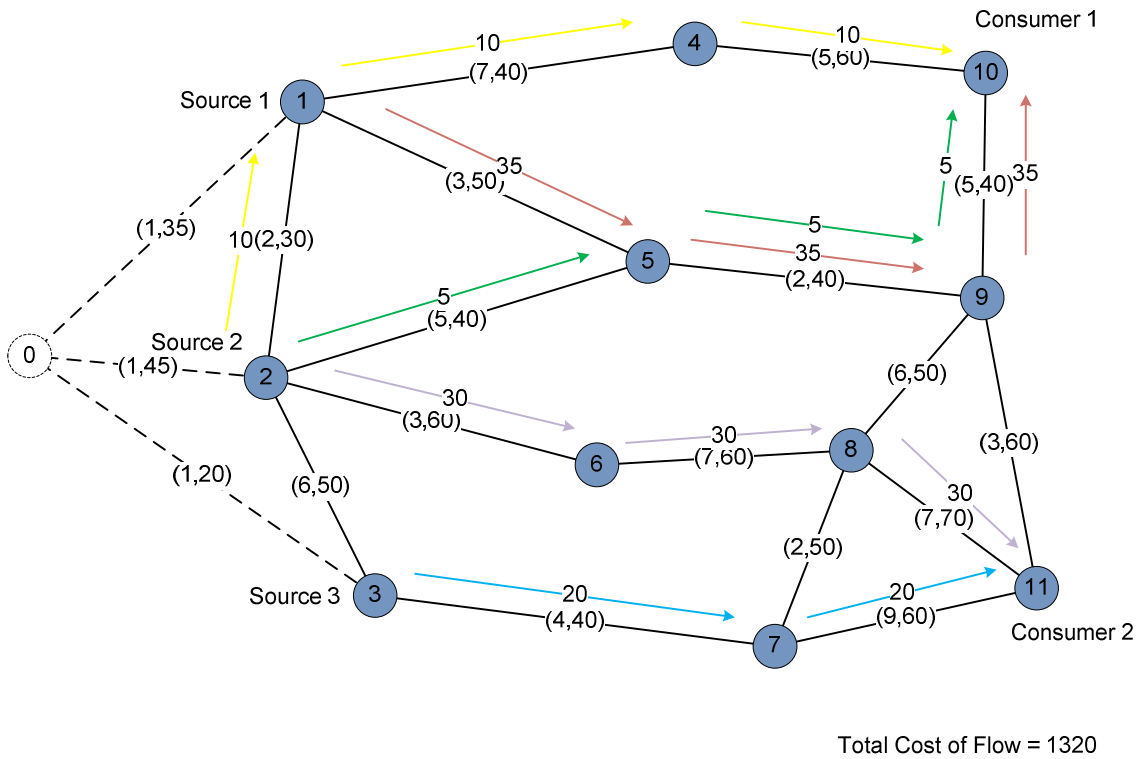

Figure 4.3 Solution for the sample graph using the Modified Dijkstra's Method.

After calculating the final costs for the graph using the modified Dijkstra's method, we achieve a final cost of 1320 loss units. Figure 4.3 shows the actual flows that are

installed using the algorithm for this graph. The colored links indicate individual flows reserved during the allocation process and it the complete demand is satisfied for consumers.

We also tested both approaches for the IEEE 14 which is a test case bus system for power grids a reperesentative diagram is shown in Figure 4.4. This bus has 3 generators and 11 loads.

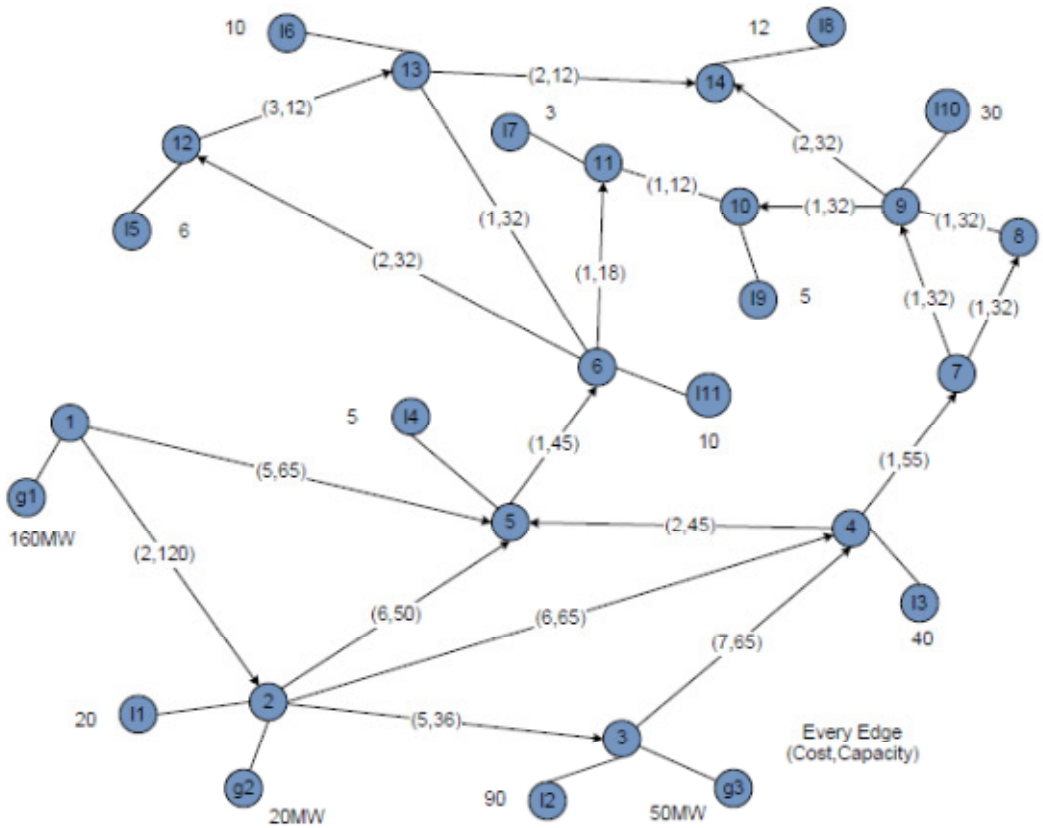

Figure 4.4 IEEE 14 test bus graph.

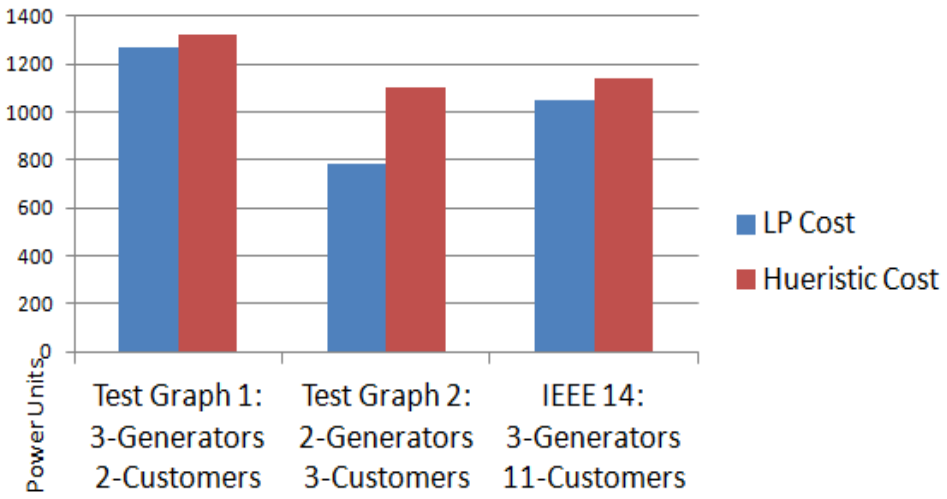

Figure 4.5 Results comparing the LP and huesristic costs.

Comparing the results of both approaches, the linear programming approach provides a solution with the most optimized cost as it has a global view of the all constraints in the system. The modified Dijkstra's algorithm provides a result that may not be optimum but is partially decentralized, as each destination reserves a routing path for flows in a distributed fashion. Figure 4.5 shows a cost comparison between three sample test cases. However, allocation of energy may still remain a centralized decision.

CHAPTER FIVE

CONCLUSIONS

Increasing energy usage and envoirnmental concerns are forcing energy companies to rethink the manner is which electrical energy is produced and distributed.

In this work, we survey the exsisting research in this area that presents similar ideas to ours for the distribution of energy. We describe our approach to the Digital Gridas the Controlled Delivery Power Grid (CDP). Also, we evaluate an experimental test bed to explore the feasibility of supplying energy in discrete quantities in time. The results of this experiments show an approach to implementing the CDP and demonstrated its feasibility by presenting high satisfaction ratios to the demand of energy from users. This achieved satisfaction also establishes the feasibility of distributibuting energy in a controlled fashion among consumers. We also presented a graph theortical model of the power grid and evaluated the losses of routing energy using a Linear Programming approach and comapared the results with a heuristic algorithm that is based on the Dijkstra's algorithm, which is a conventional approach for the calculation of routes in computer networks. This proposed algorithm accommodates, the differences in the transport of energy to those in the transport of data in computer networks.

APPENDIX A

Linear Programming Code for Sample Graph

```
/*DECision VARiables*/
var x01 = 35;           var x02 = 45;           var x03 = 20;
var x12 >= 0, <=30;     var x21 >= 0, <=30;     var x15 >= 0, <=50;
var x51 >= 0, <=50;     var x25 >= 0, <=40;     var x52 >= 0, <=40;
var x26 >= 0, <=60;     var x62 >= 0, <=60;     var x87 >= 0, <=50;
var x98 >= 0, <=50;     var x89 >= 0, <=50;     var x711 >= 0, <=60;
var x117 >= 0, <=60;    var x811 >= 0, <=70;    var x118 >= 0, <=70;
var x910 >= 0, <=40;    var x109 >= 0, <=40;    var x911 >= 0, <=60;
var x119 >= 0, <=60;



/*OBJective FUNction*/
minimize COSTFLOW: 1*x01 + 1*x02 + 1*x03 + 2*x12 + 2*x21 + 3*x15 + 3*x51
+ 5*x25 + 5*x52 + 3*x26 + 3*x62 + 6*x23 + 6*x32 + 7*x14 + 7*x41 + 5*x410
+ 5*x104 + 2*x59 + 2*x95 + 7*x68 + 7*x86 + 4*x37 + 4*x73 + 2*x78 + 2*x87
+ 6*x98 + 6*x89 + 9*x711 + 9*x117 + 7*x811 + 7*x118 + 5*x910 + 5*x109 + 3*x911
+ 3*x119;

/* CONstraints*/
s.t. NODE0: x01 + x02 + x03 = 100;
s.t. NODE1: x01 + x41 + x51 + x21 - x14 - x15 - x12 = 0;
s.t. NODE2: x02 + x12 + x52 + x62 + x32 - x21 - x25 - x26 - x23 = 0;
s.t. NODE3: x03 + x23 + x73 - x32 - x37 = 0;
s.t. NODE4: x14 + x104 - x41 - x410 = 0;
s.t. NODE5: x15 + x25 + x95 - x51 - x52 - x59 = 0;
s.t. NODE6: x26 + x86 - x62 - x68 = 0;
s.t. NODE7: x37 + x87 + x117 - x73 - x78 - x711 = 0;
s.t. NODE8: x68 + x98 + x118 + x78 - x86 - x89 - x811 - x87 = 0;
s.t. NODE9: x59 + x109 + x89 + x119 -  x95 - x910 - x98 - x911 = 0;
s.t. NODE10: x410 + x910 - x104 - x109 - 50 = 0;
s.t. NODE11: x911 + x811 + x711 - x119 - x118 - x117 - 50 = 0;
end;
```

REFERENCES

[1] R. Abe, H. Taoka, and D. McQuilkin. Digital grid: Communicative electrical grids of the future. *Smart Grid, IEEE Transactions on*, 2(2):399–410, 2011.

[2] N. Fujii, R. Takahashi, and T. Hikihara. Networked power packet dispatching system for multi-path routing. In *System Integration (SII), 2014 IEEE/SICE International Symposium on*, pages 357–362. IEEE, 2014.

[3] K. Furukawa and H. Saitoh. An application of mobile agent for power flow control of open electric energy network. In *Electric Utility Deregulation, Restructuring and Power Technologies, 2004.(DRPT 2004). Proceedings of the 2004 IEEE International Conference on*, volume 2, pages 774–779. IEEE, 2004.

[4] E. Gelenbe and J. Fourneau. G-networks with resets. *Performance Evaluation*, 49(1):179–191, 2002.

[5] E. Gelenbe. Energy packet networks: smart electricity storage to meet surges in demand. In *Proceedings of the 5th International ICST Conference on Simulation Tools and Techniques*, pages 1–7. ICST (Institute for Computer Sciences, Social-Informatics and Telecommunications Engineering), 2012.

[6] M. M He, E. M Reutzel, X. Jiang, R. H Katz, S. R Sanders, D. E Culler, and K. Lutz. An architecture for local energy generation, distribution, and sharing. In *Energy 2030 Conference, 2008. ENERGY 2008. IEEE*, pages 1–6. IEEE, 2008.

[7] C. Richard Lin and J. Liu. Qos routing in ad hoc wireless networks. *Selected Areas in Communications, IEEE Journal on*, 17(8):1426–1438, 1999.

[8] S. Nawata, N. Fujii, Y. Zhou, R. Takahashi, and T. Hikihara. A theretical examination of an unexpected transfer of power packets by synchronization failure. In *IEICE International Symposium on Nonlinear Theory and its Applications (NOLTA 2014)*, pages 60–63, 2014.

[9] R. Rojas-Cessa, V. Sahasrabudhe, E. Miglio, D. Balineni, J. Kurylo, and H. Grebel. Testbed evaluations of a controlled-delivery power grid. In *Smart Grid Communications (SmartGridComm), 2014 IEEE International Conference on*, pages 206–211. IEEE, 2014.

[10] R. Rojas-Cessa, Y. Xu, and H. Grebel. Management of a smart grid with controlled-delivery of discrete levels of energy. In *Electrical Power & Energy Conference (EPEC), 2013 IEEE*, pages 1–6. IEEE, 2013.

[11] H. Saitoh and J. Toyoda. A new electric power network for effective transportation of small power of dispersed generation plants. *Electrical engineering in Japan*, 117(1):19–29, 1996.

[12] H. Sugiyama. Bandwidth table construction regarding cdma interferences in synchronized qos ad hoc networking. In *Proceedings of the 4th International Symposium on Applied Sciences in Biomedical and Communication Technologies*, page 77. ACM, 2011.

[13] Hisayoshi Sugiyama. Packet switched power network with decentralized control based on synchronized qos routing. 2012.

[14] H. Sugiyama. Power distribution protocol among power plants and consumers in power packet networks. In *Consumer Electronics (GCCE), 2014 IEEE 3rd Global Conference on*, pages 662–663. IEEE, 2014.

[15] H. Sugiyama. Pulsed power network based on decentralized intelligence for reliable and low loss electrical power distribution. In *Computational Intelligence Applications in Smart Grid (CIASG), 2014 IEEE Symposium on*, pages 1–6. IEEE, 2014.

[16] H. Sugiyama. Direct relayed power packet network with decentralized control for reliable and low loss electrical power distribution. In *Consumer Electronics (GCCE), 2013 IEEE 2nd Global Conference on*, pages 32–36. IEEE, 2013.

[17] R. Takahashi, T. Takuno, and T. Hikihara. Estimation of power packet transfer properties on indoor power line channel. *Energies*, 5(7):2141–2149, 2012.

[18] R. Takahashi, K. Tashiro, and T. Hikihara. Router for power packet distribution network: Design and experimental verification. 2015.

[19] T. Takuno, Y. Kitamori, R. Takahashi, and T. Hikihara. Ac power routing system in home based on demand and supply utilizing distributed power sources. *Energies*, 4(5):717–726, 2011.

[20] T. Takuno, M. Koyama, and T. Hikihara. In-home power distribution systems by circuit switching and power packet dispatching. In *2010 First IEEE International Conference on Smart Grid Communications (SmartGridComm)*, pages 427–430, 2010.

[21] K. Tashiro, R. Takahashi, and T. Hikihara. Feasibility of power packet dispatching at in-home dc distribution network. In *Smart Grid Communications (SmartGridComm), 2012 IEEE Third International Conference on*, pages 401–405. IEEE, 2012.

[22] J. Toyoda and H. Saitoh. Proposal of an open-electric-energy-network (oeen) to realize cooperative operations of iou and ipp. In *Energy Management and Power Delivery, 1998. Proceedings of EMPD'98. 1998 International Conference on*, volume 1, pages 218–222. IEEE, 1998.

[23] Z. Yanzi, R. Takahashi, and T. Hikihara. Realization of autonomous clock synchronization for power packet dispatching. *IEICE TRANSACTIONS on Fundamentals of Electronics, Communications and Computer Sciences*, 98(2):749–753, 2015.

[24] Y. Zhou, R. Takahashi, N. Fujii, and T. Hikihara. Power packet dispatching with second-order clock synchronization. *International Journal of Circuit Theory and Applications*, 2015.

[25] Solar electricity cannot serve any significant fraction of u.s. or world electricity needs [online].

[26] http://www.eia.gov/electricity/archive/primer/.

[27] http://www.cewd.org/toolkits/teacher/eeipub_keyfacts_electric_industry.pdf.

[28] http://www.digitalgrid.org/en/technology/.

[29] O. Eiji. Linear Programming and Algorithms for Communication Networks : A Practical Guide to Network Design, Control, and Management. 2012

[30] G. Loehr "A daring proposal for electric transmission", *Public Utilities Fortnightly*, 2001

[31] Clark, H.K.; El-Gasseir, M.M.; Epp, H.D.K.; Edris, A. "The application of segmentation and grid shock absorber concept for reliable power grids", *Power System Conference, 2008. MEPCON 2008. 12th International Middle-East,* On page(s): 34 – 38

[32] J. Wu; J. Wen; Haishun Sun; S. Cheng "Feasibility Study of Segmenting Large Power System Interconnections With AC Link Using Energy Storage Technology", *Power Systems, IEEE Transactions on,* On page(s): 1245 - 1252 Volume: 27, Issue: 3, Aug. 2012

[33] M. Yazdanian,; Mehrizi-Sani, A. "Distributed Control Techniques in Microgrids", *Smart Grid, IEEE Transactions on,* On page(s): 2901 - 2909 Volume: 5, Issue: 6, Nov. 2014

[34] Y. Matsumoto and S. Manabu, "A vision of the electric power system architecture aiming for our new generation," *IEE J. Trans. PE*, vol. 123, no. 12, pp. 1436–1441, 2003.

[35] D. Das and D. Divan, "Power flow control in networks using controllable network transformers," in *Proc. IEEE Energy Conv. Congr. Expo.*, 2009, pp. 2224–2231.

[36] *Standard for Interconnecting Distributed Resources With Electric Power Systems*, IEEE Standard 1547-2003.

[37] S. Han, S. Han, and K. Sezaki, "Development of an optimal vehicle-togrid aggregator for frequency regulation," *IEEE Trans. Smart Grid*, vol. 1, no. 1, pp. 65–72, 2010.

[38] Y. Xu, R. Rojas-Cessa, and H. Grebel, "Allocation of discrete energy on a cloud-computing datacenter using a digital power grid," in Green Computing and Communications (GreenCom), 2012 IEEE International Conference on. IEEE, 2012, pp. 615–618.

[39] R. Gono, S. Rusek, and M. Kratky, "Reliability analysis of distribution networks," in Electrical Power Quality and Utilisation, 2007. EPQU 2007. 9th International Conference on, oct. 2007, pp. 1 –5.

[40] S. Galli, A. Scaglione, and Z. Wang, "For the grid and through the grid: The role of power line communications in the smart grid," Proceedings of the IEEE, vol. 99, no. 6, pp. 998 –1027, june 2011.

[41] W.-H. Liu, K. Liu, and D. Pearson, "Consumer-centric smart grid," in Innovative Smart Grid Technologies (ISGT), 2011 IEEE PES, jan. 2011, pp. 1 –6.

[42] Z. Fan, P. Kulkarni, S. Gormus, C. Efthymiou, G. Kalogridis, M. Sooriyabandara, Z. Zhu, S. Lambotharan, and W. Chin, "Smart grid communications: Overview of research challenges, solutions, and standardization activities," Communications Surveys Tutorials, IEEE, vol. PP, no. 99, pp. 1 –18, 2012.

[43] Boroyevich, D.; Cvetkovic, I.; Burgos, R.; Dong Dong "Intergrid: A Future Electronic Energy Network?", *Emerging and Selected Topics in Power Electronics, IEEE Journal of,* On page(s): 127 - 138 Volume: 1, Issue: 3, Sept. 2013

[44] Shibata, T.; Sakai, K.; Okabe, Y. "The Design and Implementation of an On-demand DC Grid in Home", *Applications and the Internet (SAINT), 2011 IEEE/IPSJ 11th International Symposium on,* On page(s): 152 – 159

[45] Gelenbe, E. "Quality of information and energy provisioning (invited paper)", *Pervasive Computing and Communications Workshops (PERCOM Workshops), 2013 IEEE International Conference on,* On page(s): 453 – 457

[46] D. Awduche, L. Berger, D. Gan, T. Li, V. Srinivasan, G. Swallow, "RSVP-TE: Extensions to RSVP for LSP Tunnels," RFC 3209, Dec. 2001.

[47] J. Hughes, "IntelliGrid Architecture Concepts and IEC61850", *Transmission and Distribution Conference and Exhibition, 2005/2006 IEEE PES*, pp.401 – 404, May, 2006.

[48] G. Liu and K. G. Ramakrishnan, "A*Prune: An Algorithm for Finding K Shortest Paths Subject to Multiple Constraints," *INFOCOM 2001*.

[49] T. Korkmaz and M. Krunz, "Multi-Constrained Optimal Path Selection," *INFOCOM 2001*.

[50] K. Kar, M. Kodialam and T.V. Lakshman, **"**Minimum Interference Routing of Bandwidth Guaranteed Tunnels with MPLS Traffic Engineering Applications," *IEEE Journal on Selected Areas in Communications,* vol. 18, No. 12, December 2000.

[51] R. Hassin, "Approximation Schemes for the Restricted Shortest Path Problem," *Mathematics of Operations Research*, 17(1):36-42, Feburary 1992.

[52] Y. Bejerano, Y. Breitbart, A. Orda, R. Rastogi and A. Sprintson, "Algorithms for Computing QoS Paths with Restoration," *INFOCOM 2003*.

[53] http://www.gnu.org/software/glpk/