University of Tennessee, Knoxville
TRACE: Tennessee Research and Creative Exchange

Doctoral Dissertations | Graduate School

12-2002

Formulation of a cislunar human transportation architecture through the use of analytic, heuristic, and parametric algorithms

Robert Lee Howard
University of Tennessee

Follow this and additional works at: https://trace.tennessee.edu/utk_graddiss

Recommended Citation

Howard, Robert Lee, "Formulation of a cislunar human transportation architecture through the use of analytic, heuristic, and parametric algorithms. " PhD diss., University of Tennessee, 2002.
https://trace.tennessee.edu/utk_graddiss/6247

This Dissertation is brought to you for free and open access by the Graduate School at TRACE: Tennessee Research and Creative Exchange. It has been accepted for inclusion in Doctoral Dissertations by an authorized administrator of TRACE: Tennessee Research and Creative Exchange. For more information, please contact trace@utk.edu.

To the Graduate Council:

I am submitting herewith a dissertation written by Robert Lee Howard entitled "Formulation of a cislunar human transportation architecture through the use of analytic, heuristic, and parametric algorithms." I have examined the final electronic copy of this dissertation for form and content and recommend that it be accepted in partial fulfillment of the requirements for the degree of Doctor of Philosophy, with a major in Aerospace Engineering.

Frank Collins, Major Professor

We have read this dissertation and recommend its acceptance:

Accepted for the Council:

Carolyn R. Hodges

Vice Provost and Dean of the Graduate School

(Original signatures are on file with official student records.)

To the Graduate Council:

I am submitting herewith a dissertation written by Robert Lee Howard, Jr. entitled "Formulation of a Cislunar Human Transportation Architecture through the use of Analytic, Heuristic, and Parametric Algorithms." I have examined the final paper copy of this dissertation for form and content and recommend that it be accepted in partial fulfillment of the requirements for the degree of Doctor of Philosophy, with a major in Aerospace Engineering.

Frank G. Collins

Frank Collins, Major Professor

We have read this dissertation
and recommend its acceptance:

Roy J. Schulz

Alfonso Pujol

Acceptance for the Council:

Vice Provost and Dean of Graduate Studies

FORMULATION OF A CISLUNAR HUMAN TRANSPORTATION ARCHITECTURE THROUGH THE USE OF ANALYTIC, HEURISTIC, AND PARAMETRIC ALGORITHMS

A Dissertation
Presented for the
Doctor of Philosophy Degree
The University of Tennessee

Robert Lee Howard, Jr.
December 2002

Copyright © 2002 by Robert Lee Howard, Jr
All rights reserved.

Thesis
2002b
.H687

Dedication

This dissertation is dedicated to my parents, Robert Lee Howard, Sr., Ph.D. and Sandra Anita Howard, Ph.D.; to my sisters and brother, Robin Howard, Tamara Howard, M.D., Ph.D., and Troy Howard; to my sister-in-law, Margaret Howard; to NASA Deputy Administrator Frederick Gregory and the late Ronald McNair, Ph.D. – two astronauts who played critical roles in my development; to all NASA employees, contractors, and others committed to the development of the space frontier; to friends, mentors, co-workers, teachers, and all who have walked with me in life; to those who dream of human expansion beyond this planet; and most importantly, to the Creator of the Universe and my Lord and Savior, Jesus Christ.

Acknowledgments

I wish to thank all those who helped me in completing this Doctor of Philosophy in Aerospace Engineering. I thank Dr. Collins for his guidance as my major advisor and all other UTSI professors and staff who have been involved in my matriculation. I also thank the engineers across this nation who have provided technical assistance with this dissertation, especially those at Johnson Space Center, Ames Research Center, the Jet Propulsion Laboratory, and Marshall Space Flight Center. I thank the Space Frontier Foundation for the opportunity to present many of my papers at the Return to the Moon Conferences. I thank the Tennessee Space Grant Consortium and Dr. Pujol for the fellowship funding and travel opportunities to present my work. I thank Dr. Milford Greene and Dr. Joseph Atkinson, whose work in establishing the McNair Scholars Program at Morehouse College laid the groundwork for the beginning of my academic career and ultimately planted the seed that resulted in this dissertation.

I thank my family and friends for their encouragement and support throughout the years.

Abstract

The purpose of this study was to conduct a conceptual design study for a lunar transfer vehicle, thus considering the question of whether or not it is possible to conduct a human lunar return given a restriction to exclusively use currently existing technology. A variety of analytic, parametric, and heuristic techniques were used to develop a comprehensive vehicle design. A modular design resulted, consisting of six component spacecraft and an associated mission control environment. A cost analysis was performed to determine an approximate funding level required to support such a vehicle. Recommendations for integration of this lunar transfer vehicle design with a lunar surface base are provided as well as recommendations for further research.

Preface

Since 1990, the author of this study has worked as a summer intern and co-op at NASA – Johnson Space Center. During these work tours, he had the opportunity to work on a variety of projects involving the space shuttle, space station and crew return vehicle. He was exposed to Shuttle, Station, and Apollo-era astronauts, flight controllers, and engineers. He also saw NASA engineers face the frustrations of hiring freezes, never-ending space station budget cuts and redesigns, and a political "glass ceiling" that seemed to sentence NASA to unambitious low Earth orbit efforts as far as human spaceflight is concerned. In this context, he began to consider the question of why NASA's space goals are so often unrealized and whether or not some of these goals are even feasible, given the current technological and political constraints. This led to the decision to undertake the design of a lunar transfer vehicle. While this design is in the context of a larger question of an overall lunar exploration program, the scope of this dissertation is focused specifically on the human transportation element, namely the lunar transfer vehicle. The investigation described in the pages that follow has allowed the author to explore questions about these matters in a systematic fashion.

Chapter One provides an introduction to this study and a rationale for a return to the moon. The National Aeronautics and Space Act of 1958 (the legislation that established NASA) is reviewed in the context of a lunar return, along with a brief discussion of the merits of lunar return as opposed to immediate Mars expeditions. Finally, specific objectives for a lunar mission that would utilize this lunar transfer vehicle are developed.

Chapter Two provides an extended review of previous scholarly studies which have focused on spacecraft design in general as well as specific lunar exploration design concepts. The majority of these concepts make generous assumptions about the willingness of Congress to fund new super-heavy lift launch vehicles – assumptions that seem dubious at best and demonstrate the need for an approach to lunar mission design that focuses more on the nation's current space launch capabilities.

Chapter Three provides an overview to the lunar transfer vehicle and illustrates the flight sequence involved in human lunar transfer. Vehicle orbits and trajectories are also calculated.

Chapters Four through Nine discuss the conceptual design of each spacecraft that composes the modular lunar transfer vehicle. Parametric, analytic, and heuristic algorithms are applied to size vehicle mass and power requirements.

Chapter Ten explains the Mission Control Center support infrastructure required by the lunar transfer vehicle. Spacecraft functions and mission timelines are assessed to determine flight controller responsibilities and staffing levels.

Chapter Eleven provides a cost estimation for the vehicle. Parametric cost estimates are used to determine vehicle development and production costs. Published launch vehicle rates are used to determine launch costs. Correlations with space shuttle and space station mission control are used to determine mission operations costs.

Chapter Twelve summarizes the study, identifies its major theses, and offers an agenda for further research.

Table of Contents

DEDICATION ..... **III**

ACKNOWLEDGMENTS ..... **IV**

ABSTRACT ..... **V**

PREFACE ..... **VI**

TABLE OF CONTENTS ..... **VIII**

LIST OF TABLES ..... **XV**

LIST OF FIGURES ..... **XVII**

CHAPTER ONE – INTRODUCTION **1**

1.1 BACKGROUND 1
1.2 WHY WE ARE IN SPACE 3
1.3 REASONS FOR SPACEFLIGHT TO THE MOON 6
1.4 IMPLICATIONS OF ACTION OR INACTION 9
Historical Lesson of the Chinese Treasure Fleet *9*
Military Implications *10*
1.5 REASONS TO NOT JUST DO MARS 13
1.6 REASONS SPACE EFFORTS HAVE DISAPPOINTED 15
1.7 CONGRESSIONAL IMPLICATIONS 17
1.8 ISSUES RELATING TO NASA BUDGET CYCLE 22
1.9 HOW WE SHOULD GO TO THE MOON 25
1.10 MISSION OBJECTIVES 26
1.11 REQUIREMENTS AND CONSTRAINTS 34
1.12 DISSERTATION OBJECTIVES 39

CHAPTER TWO – REVIEW OF THE LITERATURE **41**

2.1 OVERVIEW 41
2.2 SPACECRAFT DESIGN LITERATURE 41
2.3 SPACECRAFT DESIGN STANDARDS AND TOOLS 50
2.4 LUNAR MISSION LITERATURE 52
2.5 IMPLICATIONS FOR DISSERTATION 58

CHAPTER THREE – CISLUNAR TRAJECTORIES AND VEHICLE OVERVIEW **61**

3.1 TRAJECTORY LIMITING FACTORS 61
Heavy Lift Capability *61*
Cryogenic Boiloff *62*
Low Performance of Storable Propellants *62*
Non-Viability of Nuclear Propulsion *63*
Human Vulnerability in Cislunar Space *63*
3.2 CISLUNAR TRAJECTORIES INVESTIGATED 64

3.3 ALGORITHMS USED 65
3.4 TRAJECTORY DETERMINATIONS 66
Outbound *66*
Inbound *68*
Abort Options – Deorbit and Direct Entry *69*
3.5 POTENTIAL TRAJECTORY SOLUTIONS 69
3.6 TRAJECTORY SUMMARY 71
3.7 IMPLICATIONS OF USING L1 71
Overview *71*
Analysis of Collinear Equilibrium Points *74*
Application of JSC Study to Trailblazer LTV Problem *75*
Collinear Equilibrium Point Orbits *76*
JSC Controller and Application to LTV Design *77*
3.8 LTV OVERVIEW 79
3.9 LTV SPACECRAFT DESCRIPTIONS 81
Crew Module (CM). *81*
Propulsion Module 1 (PM1). *81*
Aeroshell Module (AM) *81*
Ascent-Descent Vehicle (ADV). *82*
Propulsion Module 2 (PM2). *82*
Fuel Tanker (FT) *83*
3.10 LTV COMMUNICATIONS ARCHITECTURE 84
3.11 LTV FLIGHT OPERATIONS 86
3.12 TRAILBLAZER MISSIONS 87
Trailblazer 1: Infrastructure Development Mission 1 ..... *87*
Trailblazer 2: Infrastructure Development Mission 2 ..... *87*
Trailblazer 3: Infrastructure Development Mission 3 ..... *88*
Trailblazer 4: Fuel Prospecting Mission 1 ..... *89*
Trailblazer 5: Fuel Prospecting Mission 2 ..... *89*
Trailblazer 6: Fuel Prospecting Mission 3 ..... *89*
Trailblazer 7: Commercial Opportunities Mission 1 ..... *90*
Trailblazer 8: Commercial Opportunities Mission 2 ..... *90*

CHAPTER FOUR – LTV CREW MODULE 91

4.1 OVERVIEW 91
CM-ADV Rendezvous Location *91*
CM Vehicle Selection *92*
4.2 LIFE SUPPORT 95
Atmosphere Management *95*
Cabin Pressure *98*
Water Supply *100*
Radiation Protection *101*
4.3 CREW ACCOMMODATIONS 102
4.4 AVIONICS 107
GPS *107*

Star Sensors *107*
Sun Sensors *108*
Horizon Sensors *108*
Laser Rangefinders *109*
Air Data System *109*
Vehicle Autonomy *109*
Flight Computer *112*
4.5 DOCKING SYSTEMS 115
4.6 THERMAL CONTROL 117
4.7 COMMUNICATIONS 120
4.8 PROPULSION 124
Engine Selection *125*
APS Performance *125*
ACS Configuration *126*
ACS Performance *127*
Tank Sizing *128*
4.9 POWER 129
Batteries *129*
Solar Arrays *131*
4.10 MASS PROPERTIES 132
4.11 ELV DEPLOYMENT 133

CHAPTER FIVE – PROPULSION MODULE 1 134

5.1 OVERVIEW 134
5.2 RADIATION PROTECTION 134
Polyethylene Shielding *136*
PM1 Radiation Shield *137*
5.3 AVIONICS 138
5.4 DOCKING SYSTEMS 139
5.5 THERMAL CONTROL 140
5.6 COMMUNICATIONS 141
5.7 PROPULSION 142
MPS Configuration *142*
MPS Performance *142*
ACS Configuration *143*
ACS Performance *143*
PM1 Refueling *144*
Tank Sizing *145*
5.8 POWER 145
5.9 MASS PROPERTIES 147
5.10 ELV DEPLOYMENT 147
5.11 PM1 REDUNDANCY 147

CHAPTER SIX – ASCENT DESCENT VEHICLE 149

6.1 OVERVIEW 149

Implications of Surface Base on ADV Design and Operations *149*
Differences from other Lunar Lander Concepts *150*
6.2 ADV CONFIGURATION 151
ADV Cabin Wall Thickness *152*
6.3 LIFE SUPPORT 153
6.4 AVIONICS 154
6.5 DOCKING SYSTEMS 155
6.6 THERMAL CONTROL 155
6.7 COMMUNICATIONS 156
6.8 PROPULSION 156
SLS Configuration *156*
SLS Performance *157*
ACS Configuration *157*
ACS Performance *158*
ADV Refueling *158*
Tank Sizing *159*
6.9 POWER 160
6.10 MASS PROPERTIES 161
6.11 ELV DEPLOYMENT 161

CHAPTER SEVEN – AEROSHELL MODULE 163

7.1 BACKGROUND 163
7.2 AEROCAPTURE MODULE DIMENSIONAL RESTRICTIONS 165
7.3 AEROCAPTURE MODULE FLIGHT PROFILE 167
7.4 ENTRY ENVIRONMENT 168
Flight Trajectory *168*
Entry Heating *169*
7.5 THERMAL PROTECTION SYSTEMS OVERVIEW 174
7.6 TPS MATERIAL SELECTION 177
7.7 TPS SIZING 182
7.8 TPS STRUCTURE 184
7.9 SYSTEMS SIZING AND MASS PROPERTIES 185
Avionics *185*
Communications *186*
Propulsion *186*
Docking *188*
Power *190*
Thermal *191*
Ballast *192*
Mass Properties *192*
7.10 AEROSHELL DEPLOYMENT 194
Earth Launch *194*
Trans L1 Injection *194*
L1 Stationkeeping *195*
Aeroshell Module Redundancy *195*

Aeroshell Module Disposal *196*

CHAPTER EIGHT – FUEL TANKER **197**

8.1 OVERVIEW 197
8.2 FUEL TANKER MISSIONS 197
Low Lunar Orbit Refuel Mission 1 (FT-M1) *197*
LEO Refuel Mission (FT-M2) *198*
Outbound L1 Refuel Mission (FT-M3) *198*
Low Lunar Orbit Refuel Mission 2 (FT-M4) *198*
Inbound L1 Refuel Mission (FT-M5) *198*
8.3 AVIONICS 199
8.4 DOCKING 199
8.5 THERMAL 200
8.6 COMMUNICATIONS 200
8.7 PROPULSION 201
MPS Configuration *201*
MPS Performance *201*
ACS Configuration *201*
ACS Performance *203*
Refueling Operations *203*
Tank Sizing *204*
8.8 POWER 205
8.9 MASS PROPERTIES 206
8.10 ELV DEPLOYMENT 206

CHAPTER NINE – PROPULSION MODULE 2 ..... **207**

9.1 OVERVIEW 207
9.2 CENTAUR SUMMARY 207
9.3 DELTA 4-2 SUMMARY 208
9.4 PM2 DOCKING SYSTEMS 209
9.5 COMMUNICATIONS 210
9.6 POWER 210
9.7 PM2 MISSIONS 210
CM *210*
PM1/AM *211*
PM1-Spare/AM-Spare *211*
ADV *211*
FT Missions *211*
9.8 PROPULSION 212
9.9 MASS PROPERTIES 212
9.10 ELV DEPLOYMENT 213

CHAPTER TEN - LTV MISSION CONTROL ANALYSIS **215**

10.1 APOLLO, SHUTTLE, AND ISS MOCR/FCR POSITIONS 218
Apollo MOCR Positions *218*

Shuttle FCR Positions with descriptions *218*
ISS FCR Positions with descriptions *219*
10.2 LTV MCC DEVELOPMENT 220
LTV FCR Position Descriptions *223*
LTV MCC Communications *226*
LTV MCC Staffing *227*
LTV MCC Console Configuration *230*
LTV MCC Facility Location *231*

CHAPTER ELEVEN – COST ESTIMATION 232

11.1 OVERVIEW 232
11.2 COMMUNICATIONS NETWORK COSTS 233
11.3 VEHICLE DEVELOPMENT AND PRODUCTION COSTS 234
11.4 LAUNCH COSTS 237
Space Shuttle *237*
Expendable Launch Vehicles *239*
ELV Payload Assignments *240*
Trailblazer Launch Expenses *241*
11.5 SPACECRAFT PROPELLANT COSTS 241
11.6 MISSION OPERATIONS COSTS 242
Mission Control Center Facility and Software Development *242*
Flight Controller and other Personnel Expenses *245*
Mission Operations Cost Summary *246*
11.7 COST SUMMARY 246

CHAPTER TWELVE – DISCUSSION AND IMPLICATIONS 250

12.1 OVERVIEW 250
12.2 DISCUSSION OF DESIGN DETAILS 250
LTV Summary *250*
Program Cost *251*
12.3 SATISFACTION OF TRAILBLAZER LTV REQUIREMENTS AND CONSTRAINTS 251
Assume no heavy launch vehicle development *251*
Assume available launch vehicles will be limited to existing vehicles *251*
Minimize the development of new space vehicles *251*
Develop intelligent navigation systems with maximum possible versatility *252*
Have the ability to receive ISS and STS support but be capable of operating with neither *252*
No more than $3-6 billion increase in NASA annual budget for Trailblazer LTV activities *252*
Five to ten year development timeline from concept to first crew landing *253*
Ten year design lifetime *253*
United States mission with limited or no foreign participation *253*
Minimize ground operations support team (flight controllers, program offices, etc.). *253*
12.4 CONCLUSIONS 253

12.5 FUTURE WORK 255
LIST OF REFERENCES 260
APPENDIX 270
VITA 336

List of Tables

TABLE 3-1. TRANSFERS FROM LEO TO LLO 271
TABLE 3-2. TRANSFERS FROM LEO TO L1 271
TABLE 3-3. TRANSFER FROM L1 TO LLO 271
TABLE 3-4. TRANSFERS FROM LLO TO LEO 271
TABLE 3-5. TRANSFERS FROM LLO TO L1 272
TABLE 3-6. TRANSFERS FROM L1 TO LEO 272
TABLE 3-7. SIMULATED LISSAJOUS ORBITS (HOFFMAN, 1993) 272
TABLE 4-1. WATER MASS REQUIREMENTS 272
TABLE 4-2. LTV CREW ACCOMMODATIONS COMPONENTS 273
TABLE 4-3. SPACE RADIATOR HEAT REJECTION (LARSON AND PRANKE, 1999) 273
TABLE 4-4. CM COMMUNICATIONS ARCHITECTURE 274
TABLE 4-5. RS-72 ENGINE (RS-72, 2002) 275
TABLE 4-6. R-4D ENGINE (R-4D – GENERAL DYNAMICS, 2002) 275
TABLE 4-7. SINGLE AXIS MANEUVERING THRUSTER SELECTION 276
TABLE 4-8. CREW MODULE POWER REQUIREMENTS 277
TABLE 4-9. POWER REQUIREMENTS BY FLIGHT REGIME 277
TABLE 4-10. ECLIPSE DURATION AND KWH BY FLIGHT PHASE 278
TABLE 4-11. CREW MODULE MASS SUMMARY 279
TABLE 5-1. PM1 MPS BURN SUMMARY 280
TABLE 5-2. PM1 ACS THRUSTER ENGINE NUMBERING 280
TABLE 5-3. PM1 SINGLE AXIS MANEUVERING THRUSTER SELECTION 281
TABLE 5-4. PM1 POWER BUDGET 281
TABLE 5-5. PM1 ECLIPSE KWH 281
TABLE 5-6. PM1 DRY MASS SUMMARY 282
TABLE 6-1. ADV SLS BURN SUMMARY 282
TABLE 6-2. ADV ACS THRUSTER ENGINE NUMBERING 283
TABLE 6-3. ADV SINGLE AXIS MANEUVERING THRUSTER SELECTION 284
TABLE 6-4. ADV POWER REQUIREMENTS BY FLIGHT PHASE 284
TABLE 6-5. ADV DRY MASS SUMMARY 285
TABLE 7-1. AEROCAPTURE DATA FOR LUNAR RETURN (WILLIAMS, GIETZEL, ET AL AND WILLIAMS, CURRY, ET AL) 286
TABLE 7-2. PREDICTED MAXIMUM CONVECTIVE HEATING 286
TABLE 7-3. AM RCS THRUSTER ENGINE NUMBERING 287
TABLE 7-4. AM SINGLE AXIS MANEUVERING THRUSTER SELECTION 287
TABLE 7-5. AEROSHELL MODULE SYSTEMS MASS SUMMARY 288
TABLE 8-1. FT MPS BURN SUMMARY 288
TABLE 8-2. FT ACS THRUSTER ENGINE NUMBERING 289
TABLE 8-3. FT SINGLE AXIS MANEUVERING THRUSTER SELECTION 289
TABLE 8-4. FT ACS PROPELLANT REQUIREMENTS 289
TABLE 8-5. FT REFUELING OPERATIONS 290
TABLE 8-6. FT POWER REQUIREMENTS BY FLIGHT PHASE 290
TABLE 8-7. FUEL TANKER DRY MASS SUMMARY 291

TABLE 9-1. MB-60 (MB-XX, 2002) 292
TABLE 9-2. CENTAUR PM-2 CAPACITY 293
TABLE 9-3. DELTA 4-2 RL-10B-2 PM-2 CAPACITY 293
TABLE 9-4. DELTA 4-2 MB-60 PM-2 CAPACITY 293
TABLE 9-5. ELV LIFT CAPACITY FOR CENTAUR PM2 294
TABLE 9-6. ELV LIFT CAPACITY FOR DELTA 4-2 RL-10B-2 PM2 294
TABLE 9-7. ELV LIFT CAPACITY FOR DELTA 4-2 MB-60 PM2 294
TABLE 11-1. LTV SPACECRAFT COST ESTIMATES 295
TABLE 11-2. ATLAS FAMILY PAYLOAD AND COST DATA 295
TABLE 11-3. DELTA FAMILY PAYLOAD AND COST DATA 295
TABLE 11-4. ELV PERCENT CAPACITY OF TRAILBLAZER SPACECRAFT 296
TABLE 11-5. ELV PERCENT CAPACITY OF SELECTED COMBINED SPACECRAFT 296
TABLE 11-6. LTV INITIAL EXPEDITION LAUNCH COSTS 297
TABLE 11-7. LTV SUBSEQUENT EVEN NUMBERED EXPEDITION LAUNCH COSTS 297
TABLE 11-8. LTV SUBSEQUENT ODD NUMBERED EXPEDITION LAUNCH COSTS 298
TABLE 11-9. LTV FUEL MASS: INITIAL EXPEDITION 298
TABLE 11-10. LTV FUEL MASS: SUBSEQUENT ODD NUMBERED EXPEDITIONS 299
TABLE 11-11. LTV FUEL MASS: SUBSEQUENT ODD NUMBERED EXPEDITIONS 299
TABLE 11-12. TOTAL LTV FUEL COSTS 300
TABLE 11-13. X-38 V201 GROUND CONTROL CENTER COST DATA (RADER, 2002) 300
TABLE 11-14. TRAILBLAZER LTV MCC DEVELOPMENT COSTS 301
TABLE 11-15. LTV MCC FLIGHT CONTROLLER SALARY COSTS 302
TABLE 11-16. TRAILBLAZER LTV PROGRAM TOTAL COSTS 302
TABLE 11-17. TRAILBLAZER LTV COSTS BY FISCAL YEAR (FIRST EXPEDITIONS IN FY 2010) 303

List of Figures

FIGURE 2-1. HLR OPEN COCKPIT LANDER 304
FIGURE 3-1. LEO OUTBOUND DELTA-V OPTIONS 305
FIGURE 3-2. DELTA-V AND FLIGHT TIME FROM L1 TO LLO 306
FIGURE 3-3. LLO INBOUND DELTA-V OPTIONS 307
FIGURE 3-4. L1 INBOUND DELTA-V OPTIONS 308
FIGURE 3-5. EARTH-MOON SYSTEM EQUILIBRIUM POINTS 309
FIGURE 3-6. THE HALO ORBIT (HOFFMAN, 1993). 309
FIGURE 3-7. THE LARGE LISSAJOUS ORBIT (HOFFMAN, 1993). 310
FIGURE 4-1. CREW MODULE 311
FIGURE 4-2. EVA SUIT PRESSURE, CABIN PRESSURE, AND R-FACTOR (NASA STD 3000, 1994). 312
FIGURE 4-3. CREW ACCOMMODATIONS LAYOUT 313
FIGURE 4-4. CT-63X STAR SENSOR (CT-63X, 2002). 313
FIGURE 4-5. MIDES HORIZON SENSOR (MIDES, 2002). 314
FIGURE 4-6. MIDES OPERATION ILLUSTRATION (MIDES, 2002). 315
FIGURE 4-7. AUTONAV OPTICAL NAVIGATION (AUTONOMOUS NAVIGATION, 2002). 316
FIGURE 4-8. APAS DOCKING MOUNT (SCHNEIDER, ET AL, 1996). 317
FIGURE 4-9. APAS DOCKING MECHANISM (SCHNEIDER, ET AL, 1996). 317
FIGURE 4-10. APAS WITH MDAS EXTENDIBLE BOOM (SCHNEIDER, ET AL, 1996). 318
FIGURE 4-11. MDAS STEEL PLATE 318
FIGURE 4-12. MDAS IN DOCKING POSITION (SCHNEIDER, ET AL, 1996). 319
FIGURE 4-13. MGS STEEL PLATE ORIENTATION 320
FIGURE 4-14. CM ACS THRUSTER LOCATIONS 321
FIGURE 5-1. PROPULSION MODULE 1 322
FIGURE 5-2. PM1 ACS THRUSTER LOCATIONS 323
FIGURE 6-1. ASCENT DESCENT VEHICLE 324
FIGURE 6-2. ADV ACS THRUSTER LOCATIONS, SIDE AND TOP VIEWS 325
FIGURE 7-1. AEROSHELL MODULE: DOMED CYLINDER CONFIGURATION 326
FIGURE 7-2. AM RCS THRUSTER ENGINE NUMBERING 327
FIGURE 7-3. LTV PREPARING TO ENTER AEROCAPTURE MODULE 328
FIGURE 7-4. LTV RETRACTION INTO AEROCAPTURE MODULE 328
FIGURE 7-5. LTV POSITIONING AT DOCKING MOUNTS 328
FIGURE 7-6. LTV DOCKED WITH AM 329
FIGURE 8-1. FUEL TANKER 329
FIGURE 8-2. FUEL TANKER ACS THRUSTER LOCATIONS 330
FIGURE 9-1. CENTAUR UPPER STAGE (ATLAS LAUNCH SYSTEM MISSION PLANNER'S GUIDE, 2001) 331
FIGURE 9-2. DELTA 4-2 UPPER STAGE (DELTA IV PAYLOAD PLANNERS GUIDE, 2000).. 331
FIGURE 9-3. RL-10B-2 (RL-10B-2, 2002) 332
FIGURE 11-1. ATLAS V FAMILY (ATLAS V ADDENDUM, 1999) 333
FIGURE 11-2. DELTA IV FAMILY (DELTA IV PAYLOAD PLANNER'S GUIDE, 2000) 334
FIGURE 11-3. TRAILBLAZER LTV PROGRAM COST DISTRIBUTION 335

Chapter One – Introduction

1.1 Background

The call for a return to the moon has been repeatedly given ever since the final lunar landing. During the period from 1969 to 1972, NASA landed six Apollo missions on the moon, thus fulfilling President Kennedy's pledge to land a man on the moon and return him safely to Earth. These six missions are the only times human beings have left the immediate vicinity of the Earth to travel to another heavenly body. In subsequent years, however, calls to return to the moon have fallen largely on deaf ears. Many times the response has been the question of why. This question is asked with more intensity under the current climate. NASA is facing immense challenges. Costs for the International Space Station are climbing into orbit; Mars is far too unknown for human flight; robotic missions seem to fail nearly as often as they succeed; and the shuttle is becoming increasingly obsolete. What is the focus NASA should pursue in the 21st century? Clearly NASA must maintain the shuttle and work towards a new launch system. They must complete the International Space Station, especially now that components are in orbit. Robotic exploration of the solar system must continue. But for all practical purposes, this might as well be a path to nowhere. While there are definite long-term payoffs – in the 20+ year timeframe – there is far too much room in the near future for a loss of identity and purpose.

Much of the space program has been criticized for failing to communicate clear rationales for space activity. Neither the scientific community nor the American public will find much reward in a space program that spends the next five years building a space

station, the next ten years visiting it, and in the background launches occasional robotic probes into space, not to be heard from until years later. While these necessary tasks should by all means continue, NASA must place them in the context of a bold vision for the future of spaceflight. This is not a vision consisting of timetables, hypothetical programs and budget projections. Those have been so over-used that they carry no meaning. Instead, this vision must go back to the 1958 Space Act and reiterate why NASA exists; it must create an inspiring image of a future in space where people beyond the agency and its contractors are participants.

NASA has the congressionally mandated responsibility of opening up the space frontier. Simply investigating LEO does not constitute an opening of the space frontier; this vision must include the moon as a near term destination. There are valid opportunities for commercial enterprise on the moon. NASA must find them and bring them into reality. There are operational procedures and engineering technologies necessary to support lunar operations. We have no idea what they are. NASA must develop and validate them. There are resources in the lunar environment that will enhance our capabilities for missions in other areas of space, both within the Earth-Moon system and further into the solar system. NASA must identify these resources, learn how to tap into them, create the conditions to make their use a reality, and pass this knowledge on to American private industry.

In a sense, there are a series of three questions that must be resolved to address the issue of rationale. Why should we be in space? Even if we should be in space, why should we go to the moon? If we go to the moon, what should that mission accomplish?

With such a rationale established, it is then appropriate to proceed to the point of developing actual mission architectures.

1.2 Why we are in Space

Why do we have a space program? Whenever technical difficulties or budgetary problems come to light, this is often the first question out of the mouths of critics. What is there about space that could possibly warrant the expenditures and risks incurred in our endeavors? What are some reasons to enter space? Why should we enter space at all? There are several reasons that come to mind. It is human desire (or alternately, it is human destiny/drive). There are commercial opportunities in space. Finally, there is a national mandate to explore space and develop its potential.

Throughout human history, mankind has exhibited a drive to reach beyond the boundaries of the time. Simple curiosity, desires to make new discoveries to improve the quality of life, and a belief that it is simply our purpose have all fueled this drive. Ancient explorers set sail – at tremendous expense and risk – seeking to traverse vast, unknown oceans and explore newly discovered continents. Even today, we still explore these oceans and continents, driven to discover and understand parts of this planet that remain a mystery to us. In the days of American expansion, people believed it was literally God's will – or a Manifest Destiny – for the country to span the continent. This is similar to the beliefs of emperors and kings throughout history who created vast nations. In a sense, space is the perfect "Manifest Destiny." Unlike the more brutal expansions in the world's past, there are no native inhabitants to be oppressed by expansion. Space is vast. No matter how far outward we expand there is still new, unexplored territory.

The National Aeronautics and Space Act of 1958 states in Title I, Sec. 102 (c), "The Congress declares that the general welfare of the United States requires that the National Aeronautics and Space Administration (as established by title II of this Act) seek and encourage, to the maximum extent possible, the fullest commercial use of space" (National Aeronautics and Space Act of 1958).

We have only barely begun to fathom commercial possibilities in space. Just fifty years ago, only the shrewdest of visionaries could have even imagined that space could be a potential source of profits. Yet today, the commercial communications industry is dependent on orbiting satellites to provide a communications infrastructure. While commercial profiteering is primarily limited at present to communications in Earth orbit, an unwritten future contains an incalculable domain of business ventures.

A point of inspiration is the city of Las Vegas, and really most of the major cities in the American southwest. Las Vegas is an island of financial profiteering in the middle of the desert. When explorers first reached the area where Vegas now stands, there was nothing but sand. Anyone would have laughed at the idea of creating a major tourist attraction in that location. Yet someone found a way to develop a wildly successful business plan. Hotel and casino operators now have no problem spending incredible amounts of money to develop their facilities, for they know with confidence that they can turn a profit. Space is where Las Vegas was a hundred or so years ago. It is a wilderness, seemingly with very little to offer. But to the proper visionary, it is the source of the next financial empire. Whether through tourism, manufacturing, scientific discovery, or some other source of income, multitudes of new industries await development.

Finally, in Title I, Sec. 102 (d), the National Aeronautics and Space Act of 1958 (as amended) imposes the following rationale for American space activity:

(d) The aeronautical and space activities of the United States shall be conducted so as to contribute materially to one or more of the following objectives:

(1) The expansion of human knowledge of the Earth and of phenomena in the atmosphere and space;
(2) The improvement of the usefulness, performance, speed, safety, and efficiency of aeronautical and space vehicles;
(3) The development and operation of vehicles capable of carrying instruments, equipment, supplies, and living organisms through space;
(4) The establishment of long-range studies of the potential benefits to be gained from, the opportunities for, and the problems involved in the utilization of aeronautical and space activities for peaceful and scientific purposes;
(5) The preservation of the role of the United States as a leader in aeronautical and space science and technology and in the application thereof to the conduct of peaceful activities within and outside the atmosphere;
(6) The making available to agencies directly concerned with national defense of discoveries that have military value or significance, and the furnishing by such agencies, to the civilian agency established to direct and control nonmilitary aeronautical and space activities, of information as to discoveries which have value or significance to that agency;
(7) Cooperation by the United States with other nations and groups of nations in work done pursuant to this Act and in the peaceful application of the results thereof;
(8) The most effective utilization of the scientific and engineering resources of the United States, with close cooperation among all interested agencies of the United States in order to avoid unnecessary duplication of effort, facilities, and equipment; and
(9) The preservation of the United States preeminent position in aeronautics and space through research and technology development related to associated manufacturing processes.

Implicit in this statute are previously mentioned reasons to enter space as well as the directives to develop and maintain the technological capability to accomplish such goals. Scientific knowledge, commercial utilization, and American leadership are all directly cited as rationales in the Act. The human drive to explore is not directly mentioned, but is perhaps an indirect motivation for several of the listed objectives.

So now that we have a reason for space activity, what is it that makes the moon an important destination? Is orbiting the Earth truly insufficient? With all the recent interest in Mars, why not forget about the moon and simply concentrate on Earth-orbiting space stations and Mars exploration?

1.3 Reasons for Spaceflight to the Moon

Some critics of lunar exploration would ask why go to the moon? They would say that we've been there with Apollo, so there is nothing new to gain. Their logic, however, is flawed. From Salyut to Skylab, to Mir, and now to ISS, we are establishing a human presence in Earth orbit. With each program we are learning new things and accomplishing more than its predecessors. Yes, we have been to the moon before, but only in the most minimal fashion. Simply put, we have not accomplished much of significance on the moon. It is true that the Apollo program provided incredible breakthroughs and discoveries, but only a tiny fraction of what can ultimately be gained from the moon was accomplished through the Apollo program. To say, "why go to the moon since we've been there with Apollo," is comparable to saying, "why build the International Space Station (ISS) since we've been in orbit with Mercury capsules." Just as Mercury was incapable of performing the missions ISS will accomplish, Apollo was also incapable of conducting the missions a return to the moon would perform. The moon has also been recommended as the next focus for space exploration by numerous committees established to guide space agencies (Schrunk, 2000).

The following elements of the National Aeronautics and Space Act of 1958 are perhaps the most directly applicable to the call for a return to the moon:

> (3) The development and operation of vehicles capable of carrying instruments, equipment, supplies, and living organisms through space;
> (4) The establishment of long-range studies of the potential benefits to be gained from, the opportunities for, and the problems involved in the utilization of aeronautical and space activities for peaceful and scientific purposes;
> (5) The preservation of the role of the United States as a leader in aeronautical and space science and technology and in the application thereof to the conduct of peaceful activities within and outside the atmosphere;
> (9) The preservation of the United States preeminent position in aeronautics and space through research and technology development related to associated manufacturing processes.

We currently have no vehicles capable of carrying people to the moon, or any equipment and supplies beyond that of small robotic rovers and science landers. However, only relatively modest developments are required to develop this capability from a synthesis of currently existing space systems. The moon is logically the next developmental step in terms of space transportation capability and compliance with Title I, Sec. 102 (d) 3 of the National Aeronautics and Space Act.

Numerous researchers have proposed benefits from lunar utilization, and establishing studies of those benefits is specifically part of the NASA mission. Another directly relevant section of the National Aeronautics and Space Act that also speaks towards this issue is, "The Congress declares that the general welfare of the United States requires that the National Aeronautics and Space Administration (as established by title II of this Act) seek and encourage, to the maximum extent possible, the fullest commercial use of space." This provision does include the moon and is one of the reasons that NASA must return to the moon as quickly as possible.

Just as an arbitrary example on a somewhat morbid level, the space burial company Celestis has recently begun selling lunar burials (in addition to their already existing Earth orbital services). For a price of $12,500, an interested person can have a symbolic portion of their departed loved one's ashes impacted on the lunar surface (Celestis, Inc. 2002). The first participant in this service was Dr. Eugene Shoemaker – co-discoverer of the famous Shoemaker-Levy comet – whose ashes were carried in a Celestis flight capsule as a secondary payload aboard NASA's Lunar Prospector. His ashes impacted the lunar surface on July 31, 1999 (Celestis, Inc. 2002).

This is one of the first of many lunar business opportunities that could be realized in the next few decades. Numerous other business schemes for lunar revenue are being formulated left and right. Ideas run the gamut from simple banking and commerce using remote servers on the moon to wild, grandiose schemes for mining and construction colonies, lunar fueling stations, and even massive lunar hotels – the ultimate Las Vegas of the future. There is, however, one thing all these concepts have in common. They require the development of a capability to travel to the moon and return safely. "The key to unlocking space for business and individuals who will use it to make money, pay taxes, create jobs, and improve the economy is to facilitate the access to space" (Hammond, 1999). Celestis dealt with the Earth to moon transit problem by flying as a secondary payload on a NASA mission, but was only able to do so because its payloads are small – on the order of seven grams of cremated ash per customer. Many companies sit sidelined, unable to participate in off-world economies until NASA develops commercially viable cislunar transportation architectures capable of transporting large payloads.

There is a threshold that leads to entirely new worlds of business opportunities on the moon. We have not yet crossed that threshold. One reason to return to the moon is to take us a step closer. It is NASA's congressionally mandated responsibility to do all within its power to take us that step closer.

Finally, the United States cannot hope to maintain its leadership role if another nation is the one to implement these studies and develop the associated spacecraft. Or, as Oberg puts it, "Control of space is the linchpin upon which a nation's space power

depends" (Oberg, 2002). Simply put, if the Untied States wishes to remain a superpower, this is one of the missions it must conduct.

1.4 Implications of Action or Inaction

"Technological competence is required to become a space power, and conversely, technological benefits are derived from being a space power...A properly organized and efficiently aimed space industry enhances national wealth" (Oberg, 2002). In other words, pursuing a lunar program would invariably produce technological benefits and enhanced global status. Conversely, abandoning a space effort could produce opposite results.

Historical Lesson of the Chinese Treasure Fleet

As a sobering historical observation, Oberg brings out the lesson of the Chinese "Treasure Fleet." In the early 14th Century, China fielded immense ocean-going vessels that visited the East Indies, northern Australia, and the east coast of Africa (Oberg, 2002). In the 1400s, the Chinese sent out seven expeditions of these great ships, in fleets numbering up to 300 (with a mix of the giant ships and smaller support vessels) with crews totaling up to 27,000 people. The mere arrival of such fleets caused nations to declare allegiance and pay tribute (Bosworth, 1999).

Chinese naval technology was far superior to that of European technology of the same era (with the exception of navigation instruments). In 1403, Emperor Zhu Di commissioned a naval fleet with the largest ships measuring more than 500 feet long. These ships were multi-masted, with up to thirteen watertight compartments. The Europeans did not develop compartmentation until learning of this Chinese technology in the 19th century, some 400 years later (Bosworth, 1999).

However, the Chinese society never found anything "worth buying" from the "barbarians" the Chinese visited in their expeditions and were more concerned with internal issues, such as agriculture, the army, and national infrastructure projects (Bosworth, 1999). Consequently, the Chinese government diverted funding from the fleet to other national interests (Oberg, 2002). In 1500, it was made a capital offense to go to sea in a ship with more than two masts without special permission. In 1525, officials were authorized to destroy the larger classes of ships (Bosworth, 1999).

A mere century after the Chinese's fateful decision, Portuguese sailors, clearly inferior to the no longer existent Chinese navy, retraced the Chinese routes in the opposite direction to "discover" China. Thus began a centuries-long confrontation between East and West that had unfortunate consequences for the East as the West emerged as the technologically superior and dominant force. Imagine how history would have played out differently had China retained its fleets, allowing it to be the dominant sea power during the 15th-19th centuries, as opposed to the competing European powers of Portugal, Spain, France, and Britain.

In a sense, rockets and spacecraft are the "Treasure Fleet" for the United States and the lesson of the Chinese should be obvious. It is a rare and priceless commodity for a nation to acquire technological capabilities that place it head and shoulder above its neighbors.

Military Implications

Despite President Bush's push for missile defense with possible space-based elements, Oberg (2002) believes that, "In the near term, US policy will strive to keep space a weapons-free sanctuary." However, he adds that, "when warfare [inevitably]

moves to space, many orbital locations will prove to be advantageous, including some that use the Moon's gravitational field" (Oberg, 2002).

The Moon has an unlimited supply of energy (solar power, fusion and fission nuclear reactants [Geochemistry, 2001], cryogenic and non-cryogenic rocket propellant sources), unlimited ammunition (lunar rocks and boulders, that may be accelerated through any number of technologies, as well as the previously mentioned nuclear reactants), and is potentially a near-impenetrable fortress (depending on how assets are buried and shielded). If and when such a time comes that warfare expands into the space environment, the nation(s) with the greatest advantage will be those already capable of reaching and operating from strategic orbital locations, including the moon.

The United States enjoys military superiority on land, sea, and air, but the only nation that has ever had military superiority in space is the Soviet Union. The only true manned combat spaceship flown (though others were designed) was the Soviet Union's Salyut 3 space station, which was launched on June 25, 1974. The station visually hunted Skylab, demonstrating use of its sensor array in space-to-space warfare and reconnaissance (Almaz Part 1, 2002).

The station was armed with a 23 mm Nudelmann NR-23 aircraft cannon, intended for defending the station against interception by American spacecraft. The NR-23 had a total mass of 39 kg. It fired a 23 mm, 200 g projectile at a muzzle velocity of 690 m/s and a rate of 950 rounds per minute. When being fired, this would have produced a recoil equivalent to 2185 N of thrust. The station was easily stabilized during firing by the two main engines of 3900 N each and the attitude control engines of 390 N each (Almaz Part 2, 2002).

The entire station was moved by manual or remote control in order to track the target (Almaz Part 2, 2002). On January 24, 1975, trials of a "special" system aboard Salyut-3 were carried out with positive results at ranges from 3000 m to 500 m. Cosmonauts have confirmed that a target satellite was destroyed in the test, which was presumably a test of the station's gun (Almaz Part 1, 2002). Fortunately, the gun was never used against American spacecraft.

The closest the United States ever came to a manned combat spaceship was a design concept for an Apollo Covert Space Denial (CSD) Lunar Module, which would operate in Earth orbit, armed with black spray paint. The idea behind the "weapon" was that the paint would ruin optics, disable solar cells, and change the target spacecraft's thermal characteristics, causing it to overheat and fail (Apollo LM CSD, 2002). The Apollo CSD was never built.

While the Russians are no longer potential adversaries, it is important to consider that as the cost of spaceflight goes down, the potential increases for adversarial nations and other hostile entities to gain access to space. It should be noted that according to the 2002 Forbes list of the world's billionaires, the average billionaire's net worth is $3.1 billion and twelve of the world's billionaires come from the Middle East (The World's Billionaires, 2002), a region that currently is not a space power but clearly has ongoing tensions with the United States. Given that even a can of spray paint has weapons potential in space, it is important that the United States maintain sufficiently superior access to space (and to strategic locations in space). It is a known principle of military strategy that achieving superiority requires control of the high ground. LEO is no longer the highest ground – the moon now claims that title. It is not useful for the United States

to actually deploy weapons in space – such activity could trigger a space arms race – but a robust space infrastructure, including lunar access, would allow for a more capable logistics link and would allow weapons to quickly be positioned if another entity were to deploy weapons in a threatening manner.

1.5 Reasons to Not Just do Mars

To a large extent, the preceding information has provided rationale for a return to the moon. But in the context of possible Mars exploration, the issue of Mars must be addressed. Some argue that the rationales for returning to the moon are valid, but they are outweighed by the rationales for Mars exploration. These people see Lunar and Mars programs as competitors, such that we will either do the moon now, or we will do Mars now. The mistake in this thinking is that Mars is seen as a valid option. Unfortunately, we truly are not ready for Mars yet. Neither the political will nor the technological expertise exists to send humans to Mars.

It is becoming recognized that the variable specific impulse magnetohydrodynamic rocket (VASIMR) is a prime contender for a human Mars mission. However, VASIMR technology is far from operational and the impression some hold that Mars is "just around the corner" is inaccurate. Additionally, VASIMR and all Mars surface plans require nuclear reactors, a requirement which may be unable to overcome political barriers anytime in the near future, despite a rapidly growing interest within the space community. Even if VASIMR is not used, all Mars plans do require the development of a new (Saturn V/Energia class or superior) super-heavy lift booster. There currently is virtually no Congressional support for development of this booster within the next five to ten years.

There are also unresolved concerns in the areas of radiation protection, food shelf life, plant growth, equipment repair, physiological reconditioning, surface base assembly, extraterrestrial planetary human factors, and many others. Many of solutions to these problems should be verified and utilized in a low gravity, remote environment prior to entrusting them to a Mars mission. Such verification tests assume an already existing lunar presence capable of facilitating such tests. A return to the moon could lay the groundwork for an infrastructure capable of supporting such research.

Another key arena that must be proved before proceeding to Mars involves the unexpected. It has been said that our ability to send missions to Mars and beyond depends heavily on robust systems capable of dealing with the unexpected and multi-functional tools for dealing with the unexpected (Larson, 1999). The unexpected is the key issue. Unexpected events occur almost routinely in human space missions. In Earth orbit, a full mission support team is available to help the astronauts resolve the situation. Proposed solutions are choreographed and tested on Earth before astronauts are allowed to proceed. There is real time direct communications as the astronauts attempt a resolution. In most situations if no solution can be found, the mission can be aborted and the crew can return safely to Earth. The key things lost at Mars are communications and the ability to abort the mission. The distance is so great that real time communications will not be possible. Also due to the distance, there are no aborts – a Mars crew cannot abandon the base and return early. Before we send crews to Mars we need to understand what can go wrong on a surface base and prove our ability to resolve unexpected crises. The moon is a location where such operations can be tested.

1.6 Reasons Space Efforts Have Disappointed

If there are so many reasons and opportunities to be in space, and even a federal mandate to be in space, why have space efforts often disappointed? Many see the space program as an endeavor that costs too much and accomplishes too little. Frequently, there is a divergence in goals that can create problems. Fundamentally, there are often two types of people involved in the space program. On one side (typically the NASA or contractor engineer) is the "Space Advocate." On the other side (typically the members of Congress and the President) is the "Governmental Administrator." These two often have different goals for American space activity, which leads to clashes in program development and budget appropriations.

The Space Advocate is the type who wants to climb the mountain because it is there. This person has an innate desire to explore space and expand human presence into space. He or she appreciates the benefits we gain from the utilization of space, but would favor space exploration even if there were no gains. The thrill is in the journey, so to speak.

The Governmental Administrator has no such love for the journey. He or she is only concerned with protecting and advancing the interests of the United States of America. And that is fitting, for that is the role of the government. This person appreciates the benefits gained from the utilization of space (which is why they authored the National Aeronautics and Space Act in the first place), but prioritizes those benefits among other endeavors. The metric used is how do these benefits advance the interests of the nation?

Since the beginning of the space program, these two factions have engaged in an intricate dance to try to find common ground. Unfortunately, that dance has often included false or unrealistic promises to garner support. Advocates often promise spacecraft designs that can do anything, when in reality they can do only a few things. Administrators promise and sometimes even legislate directives for space utilization that ultimately cost far more than the Administrators are willing to spend.

During the Apollo era, the two were largely united as the Advocate desire to explore space was coincidentally matched with the Administrator desire to demonstrate American technological superiority over the Soviet Union. The successful landings on the moon ironically destroyed this alliance, however. The Administrators had achieved their goal and had nothing further to gain from lunar landings. The Advocates, on the other hand, had merely seen their first step accomplished. Its success spurned them on to grandiose dreams of space colonies, Mars exploration, and lunar cities. To this day, Advocates are struggling to understand why the Administrators "turned their backs on them," not fully grasping why support existed for the Apollo program and thus not understanding why that level of support does not exist today.

Another source of disappointment is the reality that political management of a technological endeavor is a dubious prospect at best. American politics is grounded in the arts of compromise, lobby, and coalition building. Technological enterprises are based in the laws of physics, thorough analysis, and relatively inflexible design. The two do not mix well, especially when these differences are not taken into consideration.

Even once the Advocates and Administrators have agreed on a space initiative to support and funding has been authorized, and even when all technological challenges

have been resolved, program expenses can still grow out of control, causing disappointment and resentment among the Administrators. Many times, space programs become bloated for the purpose of job security. The temptation is great (for both civil service and contractors) to involve an entire office in a study, even if one person can do the job, thus justifying (to the Administrator) the existence of the office. Many excuses are given: that it is necessary to maintain the skill level of all employees; that we should never be dependent on the technical competence of any one person; that multiple sets of eyes are needed to verify data; etc. These are all true, but the result is a semi-uncontrolled growth of project size (and indirectly complexity, sometimes even increasing the potential for error). The project then costs more than it would otherwise have cost.

The result of all of this is massive, underachieving projects whose destiny is cancellation. Almost ALL human space programs are eventually cancelled. The only exception to date is the Space Shuttle (It should be pointed out that while the Shuttle is not yet cancelled, replacements are already on drawing boards and it is only a matter of finding Congressional spending approval.). Even ISS assumes cancellation and is designed with termination in mind. A true ongoing station would assume orbital replacement of all components, rather than an eventual deorbiting of the complex.

1.7 Congressional Implications

The rocket equation is more than physics. In other words, the design of a spacecraft does not begin and end with its mass properties, propulsion systems, orbital mechanics, and so forth. The purpose for the spacecraft must be effectively communicated to its sponsors, in the case of a NASA project, the American public and

Congress. The greatest challenge for the a lunar program lies not in systems engineering or orbital mechanics, but in negotiating its way through the Congressional appropriations process. This is not to diminish any of the technical issues involved in lunar travel, but to emphasize the reality that other factors are equally important – and in these other areas NASA has historically not displayed the same level of effectiveness as it has in systems engineering functions. The result has been a consistent decrease in Congressional support for NASA since Apollo.

In a recent AIAA magazine interview, Senator Bill Nelson (D-FL) described NASA as an agency that carries with it the hopes and dreams and imaginations of Americans (Sietzen, 2002). Representative Mel Watt (D-NC) agrees that NASA has historically carried those hopes and dreams, but he adds that while NASA continues to carry that same kind of interest with a number of his colleagues, many don't have that image of it (Watt, 2002).

Congressman Watt also recommends that as a first step in recapturing that image, NASA needs to make sure they are hiring a diverse employment group so that everybody [Congress as well as all sectors of the American public] feels like they have some connection to the missions and responsibilities of NASA (Watt, 2002).

With respect to rationale for missions to return to the moon and appropriate levels of funding, Congressman Watt places the burden squarely on the shoulders of NASA and does not feel that it Congress' place to provide that rationale. "That has to originate and the case needs to be made by NASA; that's kind of like me telling NIH what they should research next, or how they should research it, or what methodologies they should use. We want these agencies to be on the cutting edge and they [NASA] need to be telling us

what the case is for exploration of the Moon or stars or other planets. Politicians shouldn't be telling them that; they need to be telling us that and making the case for it and telling us what the potential is for discoveries that will be beneficial for us in our day-to-day lives. I don't know that I have any views or expertise I can share with them about whether it should be the moon or some other parts of space, but I would be receptive to them telling me what they see as the next frontier and what the benefits are for us in trying to pursue the next frontier. I want them to be constantly suggesting what the next frontier should be and making the case that that frontier is important to humankind. Without them making that case I think the level of support will diminish over time" (Watt, 2002).

In other words, there will be no directives coming from Congress for NASA to return to the moon, and if there is no sufficient rationale from NASA to Congress, then there will be no significant funding coming from Congress for NASA either. This is central to the mistake NASA has made with LUNOX, FLO, and other lunar return efforts. NASA studies have primarily presented large engineering studies, with correspondingly large budgets, but have not presented equally impressive rationales.

"I've been supportive of NASA's appropriations request," he adds, "but I think they've got to continue to make the case that what they're doing is beneficial, just like everyone must do. We can't assume that what we were doing the year before is going to be beneficial the next year and the year to come. In some ways this is more of a challenge for agencies like NASA than agencies where we can see tangible results that directly benefit people. A lot of times the benefits from NASA are longer term and less

understandable in their immediate impact. So NASA needs to continue to make that case" (Watt, 2002).

In terms of NASA's responsibility for ensuring that the United States maintains global leadership in all space-related industries, Congressman Watt treats NASA similarly to NSF and NIH. "In same way as NSF and NIH have been in the forefront of encouraging research into new medicines, new science, and maintaining the US on the cutting edge of those things, NASA has similar responsibilities. I view them similarly to NIH and NSF as one of the agencies that should be encouraging innovation and keeping us on the cutting edge" (Watt, 2002).

Historically, NASA projects have been subjected to budget cuts during their design and development phases, resulting in redesigns that left the finished product less capable – and sometimes more expensive – than the original concept. To avoid this fate, Congressman Watt declares that any future lunar program should, "be constantly demonstrating [to Congress] that in the earlier R&D stages sufficient commitments must to be made to that stage to ensure the results that are projected at later stages" (Watt, 2002).

In other words, NASA must engage in a little "communications science" if it wants funding to do rocket science. Like rocket science, there is more involved than initially meets the eye. Dr. Sandra Howard (2002), retired professor of Business Communication at North Carolina A&T State University states, "The act of communication, a complex process in itself, is compounded significantly when you are trying to communicate with different audiences who have different degrees of understanding about your topic. This job can be especially problematic when you are

presenting a funding request that must be acted upon by individuals who hold a broad spectrum of positions, with varying degrees of support for, as well as opposition to, the idea of granting your request."

Congress is faced with the awesome responsibility of ensuring that the fiscal allocations under its control are handled both wisely and responsibly. The myriad of funding requests and pet projects that make their way to the Capitol building each day makes NASA's task of securing sufficient funding from appropriations committees a particularly daunting challenge (Sandra Howard, 2002).

It is clear that despite past deeply rooted support from the American public in general, as well as from Congress, NASA no longer commands widespread interest or strong fiscal backing (Sandra Howard, 2002). In order to "make the case" as Congressman Watt suggested, it is important for NASA to first answer several key questions.

What is the best process to use in communicating the reasons the program should be funded? Who are the various groups and audiences who will influence the outcome regarding your request? What is the current position of each group that must be considered? Which persons or groups have a vested interest in supporting your project or withholding their support? Which spokespersons are most likely to address the concerns of the various groups most credibly and most effectively? What kinds of strategies will be most effective in making the case? Which strategies should be avoided because they are more likely to fail than to succeed? How much explanation do the different groups need in order to understand the project? What kind of timetable should be used in promoting the endeavor (Sandra Howard, 2002)?

How will the project meet the needs of the individuals within the various groups? What are the important advantages and disadvantages that should be considered? How do the advantages outweigh the disadvantages? What are the issues – the hopes, the dreams, the fears, and the needs – that would motivate the various groups to support the lunar effort, despite possible inherent conflicts of interest? What are the benefits that will make the venture worth the cost – from both a financial and a non-financial perspective (Sandra Howard, 2002)?

In developing and communicating the *raison d'etre* for appropriating the fiscal support needed for the project, NASA must determine carefully which factors should be considered and which points should be emphasized in making its funding appeal. NASA must communicate effectively the rationale for, as well as the benefits from, the proposed lunar venture if the agency is to be successful in securing the psychological and financial support necessary to carry it out (Sandra Howard, 2002).

1.8 Issues relating to NASA budget cycle

If Congress is not convinced of the need for NASA's agenda, then Congressional fiscal support will not materialize and disappointments with NASA space activities will continue to be exacerbated by the budget cycle used to get funding from Congress. The NASA budget cycle is a three-year process of budget formulation, budget enactment, and budget execution. Budget formulation begins in January of each year with economic forecasts and general guidelines from the Office of Management and Budget (OMB). A final NASA budget is submitted to OMB in October to be incorporated into the President's proposed budget, which is generally submitted to Congress in the following

January. Congressional review generally lasts until the end of the summer or October (Hammond, 1999).

Some problems are induced by this structure that can affect the space mission design process. With annual funding, there is a funding control gate for all programs at the beginning of every fiscal year. This, of course, places constraints and risks on the design process. A change in political alliances or public opinion could easily cause Congress to change the level of funding allocated to a spacecraft project under development. An engineering design is inherently inflexible to this sort of activity, as evidenced by costly, sometimes annual redesigns to the International Space Station throughout the previous decade. Another problem is that the NASA budget must compete with other federal agencies under the OMB for funding, including highly dissimilar agencies such as the Social Security Administration, the Veteran's Administration, and the Department of Housing and Urban Development (Hammond, 1999).

This has caused serious problems for the International Space Station from the beginning. The space station has been subjected to budget-induced major redesigns at least seven times (Hammond, 1999). For nearly a decade, Congressional opponents attempted to kill it during each budget cycle. It has gone from an eight-person station down to a four-person station, up to a six or seven-person station, and lately back down to a three-person station. Even today, ISS designers at the Johnson Space Center cannot say with true confidence what the final configuration of the station will be, primarily due to the budgetary uncertainty. This inevitably results in a vehicle that is more expensive, less capable, and less safe than the original design.

President Bush's 2002 budget considers the station "US Core Station Complete" when Node 2 is delivered on flight 10A. The impression is that American station components scheduled for delivery after Node 2 are no longer guaranteed. "U.S. contributions to such capabilities will be dependent on the availability of funds within the President's five-year budget plan for Human Space Flight, technical risks, and the Administration's confidence in Agency cost estimates" (National Aeronautics and Space Administration Budget for Fiscal Year 2002). Threatened components include the US Habitation Module, Crew Return Vehicle (thus limiting the station to a three-person crew), and Russian Program Assurance contingency modules – Interim Control Module and US Propulsion Module (National Aeronautics and Space Administration Budget for Fiscal Year 2002). This "Core Station" ISS will never be able to accomplish all of the things the full station would have attempted. It will inevitably become a source of disappointment for those who planned to utilize the full capability of the station.

This budget cycle must be considered in the development of future space projects. A space vehicle is an integrated system. When a budget change forces the elimination of a component, adjustments must be made, which can sometimes mean a redesign of the entire vehicle. Generally, such redesigns increase the cost, delay the mission, and increase both the technical risk for mission success and the risk for further budget reductions and perhaps even program cancellation. Rapidly paced projects are much more likely to survive the budget process. The more times a project faces Presidential and Congressional review, the more opportunities exist for vital funding to be removed. Thus, there is a rationale for programs that can be implemented reasonably quickly.

1.9 How We Should Go to the Moon

Having established that there are valid reasons to go to the moon, a specific plan should next be discussed. Simply launching forward unconstrained with only a general consensus to send humans to the moon would inevitably bloat into the most massive undertaking in human history. A specific concept must be established with rigid mission parameters. Once the design is begun, these parameters should not be changed. "Changes of mission parameters of almost any type have potentially large effects upon the specifications for the subsystems which compromise and support a spacecraft" (Fortescue, 1995). Even details as small as orbital inclinations are significant. "The specific orbit adopted for a mission will have a strong impact on the design of the vehicle" (Fortescue, 1995).

So how should we go? Big? Small? National? International? Many of the issues discussed previously in this paper suggest that a lunar mission should begin with a small initial presence. From three perspectives – technological, political, and commercial, it is counterproductive to begin with a large program. A small, "trailblazing" program can prototype and field test issues to build confidence before massive infrastructure resources are committed. From a political perspective, it is better for this small mission to be American. Later expansion of this "Lunar Trailblazer" program can and should be international, but by going first and laying the foundation, America establishes itself as the leader and sets the ground rules for lunar use. It also ensures that America develops and possesses the full range of technology required for cislunar travel and lunar surface operations.

1.10 Mission Objectives

The first step in the development of any space mission is to develop a mission statement and mission objectives. These drive the entire design process, as they describe what the mission is supposed to accomplish. The scope of this dissertation is limited to the cislunar human transportation element, but it cannot be developed until a broad picture for the entire mission is developed. For the Lunar Trailblazer concept advocated in this paper, the mission statement is to establish a human operational presence on the moon and provide a starting point for permanent occupation and utilization of the moon. Lunar Trailblazer Preliminary Mission Objectives are as follows:

1. Land people on a lunar polar region, sustain each crew for a period of at least one month, return them safely to Earth, and rotate new crews through the lunar facility on a periodic basis
2. Develop an expandable lunar surface infrastructure to support future lunar launch, landing and construction endeavors, including survey and appraisal of existing terrain features, road surfacing, trench excavation, and landing site preparation
3. Develop and evaluate surface base equipment and operational techniques
4. Study the effect of low gravity on human health and performance
5. Locate and survey potential lunar fuel resources
6. Mine and process lunar fuels to prototype possibilities for use in support of future space activities
7. Return raw and processed fuel samples to earth for detailed analysis
8. Provide an environment capable of supporting Mars related testbed activities
9. Demonstrate that human space missions can be conducted in a cost effective manner
10. Develop and demonstrate American competence in human spaceflight beyond the gravitational influence of Earth

Objectives 1, 9 and 10 are directly relevant to the lunar transfer vehicle design (Objectives 2, 3, and 4 are also indirectly relevant. Objective 7 is considered beyond the scope of the lunar transfer vehicle and would fall under the responsibility of a separate cargo vehicle.). Specific rationales for each mission objective will now be discussed.

1. *Land people on the lunar polar region, sustain each crew for a period of at least one month, and return them safely to Earth, and rotate new crews through the lunar facility on a periodic basis*

There is a saying, "if we can put men on the moon, why can't we put men on the moon?" This somewhat humorous statement brings out the fact that we have lost technological expertise we once had. This nation no longer has the ability to conduct cislunar travel. That capability must be restored.

The surface duration is also an important factor. During the Apollo missions, crews stayed on the lunar surface for only a few days. Of course, very little could be done in that time. A one-month stay is important in that it allows more useful time for mission activity to be conducted. This is an increase over the Apollo mission durations, but it does not begin to approach the long timeframes anticipated for most Mars mission concepts. Such a stay begins human operational experience on another surface in a small step. Future lunar programs could gradually increase the mission duration and set endurance records as confidence grows.

The polar regions are of interest for several reasons. The thermal environment at the poles is much less severe than at other locations across the moon. This will greatly simplify surface base thermal systems. Additionally, there is possible water ice (or at least hydrogen) at the poles, which is one of the most important extraterrestrial resources in any space development long-range plan. Further, there is the possibility of permanent sunlight. This is particularly true at the rim of the South Pole's Shackleton crater. In such an area, a simple solar power system could be used, avoiding the energy storage problems present elsewhere. Finally, other than the combination of an equatorial launch

site to an equatorial orbit, orbital rendezvous is simpler from a polar launch site to a polar orbit than from any other location on the moon.

It should also be noted that the time period of one month happens to match the moon's rotational period. At a polar site this is not of particular importance, though it will be relevant for landings on other locations of the moon, which are subject to tremendous temperature variations between day and night and significant energy storage/production considerations. Maintaining a human presence throughout the lunar day/night cycle forces the development of a capability to inhabit the moon throughout its temperature extremes and provide continuous power, which are necessary capabilities for any permanent lunar development.

2. *Develop an expandable lunar surface infrastructure to support future lunar launch, landing and construction endeavors, including road surfacing, trench excavation, and landing site preparation*

While the Apollo program produced a wide variety of scientific discoveries, it was never a design goal of the Apollo missions to leave the lunar surface more accessible to future human expeditions. As a result, Apollo did little to increase our capability for future human lunar activity. The same logistical issues present in each Apollo landing remain present for any future lunar landings.

Many extensive lunar concepts (FLO, LUNOX, etc.) face the obstacle that they require too elaborate a support infrastructure to be practical. Landing hazards due to uncertain terrain and possible rock obstacles are a driving concern and risk factor of every lunar landing. Long duration missions must be buried underneath regolith for radiation protection. Components for most modular bases must be transported from their landing vehicle to the base location and assembled. The lack of smoothed roads or

pathways for transport vehicles to move base components from a landing site to a base location complicates any discussion of base assembly. Structures may need to be outfitted after arrival with equipment transported on a separate landing vehicle. Additionally, items to be tested in support of a Mars mission may require pre-existing infrastructure support.

Of course, the Apollo program could not have addressed these issues because each Apollo mission utilized a different landing site and there was no reason to assume any future lunar programs would revisit an Apollo site. However, it is reasonable to conclude that expanded human facilities will eventually be constructed at a Trailblazer site. By utilizing the Trailblazer presence to prepare the lunar surface for future bases, the design of those bases and their associated delivery systems can be simplified, reducing both the cost and the technical risk of those follow-on missions.

3. Develop and evaluate surface base equipment and operational techniques

The only facility that has ever been used as a base of operations on the lunar surface is the Apollo LM, which hardly qualifies as a base. Before large-scale commercial activities or extensive lunar utilization can commence, it is important to develop operational expertise in surface habitation. Inevitably, lessons will be learned that perhaps would have been disastrous to discover in the course of a larger lunar commitment. If nothing else, it is a virtual certainty that many lessons will be learned in dealing with the problem of lunar dust. The short duration Apollo stays had considerable dust difficulties and a Trailblazer outpost will likely be faced with new issues that the Apollo visits were too brief to encounter.

4. Study the effect of low gravity on human health and performance

Microgravity experience has demonstrated that the human body is affected by a lack of gravity. It is important to determine if these same effects are experienced in low gravity (as opposed to microgravity) and develop appropriate countermeasures before committing personnel to a multi-year Mars expedition. Additionally, human factors studies have identified work environmental issues present in microgravity that are not present, or result in different actions, in normal gravity. It is important to determine how low gravity will affect human performance prior to committing to work station hardware for a Mars mission.

5. Locate and survey potential lunar fuel resources

It can be shown that significant savings can be accomplished by fueling interplanetary spacecraft with fuel mined on the moon as opposed to fuel mined on Earth (Robert Howard, Jr., 1999). The lower the Isp of the rocket being fueled, the greater the advantage. The chemical propellant (LH_2,LO_2) version of the Mars reference mission in particular can cut roughly sixty-six percent of its required fuel if it utilizes hydrogen and oxygen from lunar ice resources (Robert Howard, Jr., 1999). Achieving these savings in the Mars reference mission or in any future interplanetary mission requires the presence of a lunar mining operation. However, prior to the establishment of such an operation it is important to physically confirm the presence of fuels at suspected sites, survey these sites to determine appropriate mining and processing locations, and validate proposed fuel processing techniques.

6. *Mine and process lunar fuels to prototype possibilities for use in support of future space activities*

By building the technology to turn lunar resources into usable fuel, Trailblazer can bring Mars and other deep space human missions closer to an achievable reality. Experimenting with fuel prototypes will allow astronauts to explore a wide variety of processing technologies and select those with the greatest promise for future commercial use.

7. *Return raw and processed fuel samples to earth for detailed analysis*

Study of raw samples may reveal alternative methods of fuel extraction, which may be simpler, more cost efficient, or require fewer resources than previously anticipated methods (It should be noted that at this point, the presence of hydrogen on the moon is still speculative. While most agree that hydrogen is present at the poles in some form, there is considerable discussion as to whether it is in the form of water ice or some other compound.). This insight should be gleaned before committing to specific techniques in support of an operational fuel processing facility on the moon. Studies may also yield insights about the moon that might not be obvious with the equipment available on the surface. ISS and Earth can both provide more sophisticated laboratories for this research, allowing samples to be studied in greater detail. Returning procssed samples to Earth will also allow for the testing of various storage devices, which will be necessary for any large-scale utilization of lunar fuel.

8. *Provide an environment capable of supporting Mars related testbed activities*

As has been previously stated, the moon provides an ideal location for the evaluation of some Mars components. There is, of course, no place other than Mars

where the Martian surface, gravity, atmosphere, weather, and radiation environment can be represented. It cannot be overstated that the moon cannot test all aspects of a Mars outpost. However, in many aspects, the moon is a much closer approximation than any location on Earth or in Earth orbit. Further, tests at Trailblazer can be aborted if necessary, with no risk to crew and no possibility of stranding astronauts away from Earth. The Trailblazer outpost should be expandable; such that Mars test articles can be landed at the facility and tested by Trailblazer personnel.

9. Demonstrate that human space missions can be conducted in a cost effective manner

Human space flight has come to be perceived as impossibly expensive and it is almost expected (with resentment) that any mission will inevitably go over budget and fail to meet its design timelines. President Bush's decision to suspend development of the ISS Crew Return Vehicle and Habitation Module is seen by some within NASA as a punishment for ISS cost overruns. There is also an inhibiting myth that human space travel beyond LEO (and in some cases even there) is too expensive for a single nation. A lunar program such as the one proposed here is not too expensive for one nation, and in fact is less expensive than the American contribution to the International Space Station.

Of course, in order to prevent the traditional cost explosion, it is necessary to control all aspects of the program, including staffing, from the project's inception. Success will provide lessons for larger space projects, such as the Mars expedition. It will also inspire public and congressional confidence in NASA's ability to implement such projects. Success will further help empower private industry to expand into the lunar arena for industrial, service, recreational and other enterprises.

10. Develop and demonstrate American competence in human spaceflight beyond the gravitational influence of the Earth

It is important to ensure American technical competency in all aspects of human spaceflight. Only by actually designing, constructing and operating hardware does a nation truly gain technical competency. For instance, while the theory of orbital refueling of hypergolic propellants is well known, only the Russian space program is currently capable of refueling spacecraft in orbit. If the Russians (whether by choice or for reasons beyond their control) were to cease production of their Progress spacecraft, the International Space Station would fall out of orbit. It is important to the overall vitality of the American space program that we possess this capability as well, not for the sake of competition in an Apollo-era contest of "who is best," but for the simple need to be truly functional and not dependent on other nations for critical components of future space operations. Implementing the technology to sustain humans on an extended lunar presence will ensure American technological growth vital to future space efforts.

Further, we cannot anticipate the status of foreign relations or the economic vitality of foreign nations over the next ten to twenty years. Political or economic instabilities could render current allies and partners into enemies, competitors, or otherwise non-participants. Serious launch disasters could also destroy the spaceflight capabilities of partnered nations. The loss of relations or partnerships with such nations must not compromise American space interests. The risk of dependence on foreign nations for critical vehicle elements has already been seen in the space station program. While this risk will be necessary for many future space activities, it is an unnecessary risk for a program of Trailblazer's scale.

Keep in mind, however, that a national Trailblazer effort does not preclude an international lunar presence. It is absolutely reasonable to expect that an expansion of a human lunar presence will become international in scope. An American Trailblazer program could easily be the cornerstone of an international lunar presence by either becoming core components of a future international surface base, or by serving as an outpost to prepare a nearby surface location for such a future international endeavor. Alternately, an international base could be developed independently of Trailblazer physical resources, simply using lessons learned from Trailblazer. Regardless of the manner in which international activity spreads to the moon, Trailblazer can play a role in building the international space infrastructure while simultaneously ensuring the development of American technological competence.

1.11 Requirements and Constraints

In addition to overall mission objectives, it is also necessary to specify requirements and constraints that the Trailblazer LTV program must satisfy. These requirements and constraints provide structures that keep the program from attempting to "do everything" and provide guidance to design teams to ensure that Trailblazer is capable of meeting its mission objectives. The following are Trailblazer LTV mission requirements and constraints:

1. Assume no heavy launch vehicle development
2. Assume available launch vehicles will be limited to existing vehicles
3. Minimize the development of new space vehicles
4. Develop intelligent navigation systems with maximum possible versatility
5. Have the ability to receive ISS and STS support but be capable of operating with neither
6. No more than $3-6 billion increase in NASA annual budget for Trailblazer LTV activities
7. Five to ten year development timeline from concept to first crew landing
8. Ten year design lifetime
9. United States mission with limited or no foreign participation
10. Minimize ground operations support team (flight controllers, program offices, etc.).

Specific rationales for each requirement or constraint will now be discussed.

1. Assume no heavy launch vehicle development

Implicit in many human space flight studies is the assumption that a new heavy lift vehicle will be developed in support of the human exploration program. Human spacecraft, stations, and planetary outposts are often sized beyond the capabilities of current vehicles with the assumption that the development of boosters to launch them is a logical given. In reality, however, new launch vehicles are unlikely without serious governmental mandates to develop new launch capabilities or some economic driver for new payload capacities. Such vehicles could become exceedingly large programs, potentially larger than Trailblazer itself, and there is neither governmental interest nor economic need for such vehicles. Trailblazer will therefore be sized such that no new launch vehicles will be necessary to place a Trailblazer sized program on the moon.

2. Assume available launch vehicles will be limited to existing vehicles

Numerous commercial launch vehicles are in various stages of design, but Trailblazer will not be designed to rely upon any of these vehicles, which may or may not exist in reality when it is time to launch Trailblazer components. While these vehicles are not so much dependent upon Congressional support, their limitation is that foreign markets, technological issues, and other unpredictable factors could affect their readiness. If such boosters are not ready on time, their delays must cause no schedule slips to Trailblazer. Lockheed Martin's Atlas V recently performed a successful inaugural flight, becoming operational on August 21, 2002 (ILS Press Release, 2002) and is one of the primary launch vehicles Trailblazer will utilize. Boeing's Delta IV is preparing for its inaugural flight and for all practical purposes can be considered operational.

Consequently, Trailblazer will assume full availability of the Atlas V and Delta IV and will be designed to take advantage of their projected payload capacities.

3. Minimize the development of new space vehicles

Each new vehicle that must be developed increases the cost (both political and economic) and risk of Trailblazer. Using existing vehicles allows Trailblazer to sidestep political discussions and development challenges that could prove damaging to the mission. Existing engines, spacecraft, and other subsystems will be used wherever advantageous.

4. Develop intelligent navigation systems with maximum possible versatility

Such systems reduce the ground operations support required by Trailblazer, which will significantly reduce ongoing operations costs. Additionally, such intelligent systems are necessary for future missions beyond the Earth-moon system and successful validation of those technologies will help to reduce the risk of future space exploration. In the early days of the space program, massive computer complexes were required to calculate the spacecraft trajectories. These monstrous computer facilities had significantly less computing power than a modern laptop, thus there is no reason why these computations cannot be performed onboard the spacecraft.

5. Have the ability to receive ISS and STS support but be capable of operating with neither

Trailblazer should utilize existing space systems wherever possible for maximum flexibility, but should not be tied to the availability of any particular space infrastructure. ISS may prove too limited to provide reliable support to the Trailblazer program. Despite the fact that the station was originally pitched as an orbital construction complex (among

other things), it was designed and built as an orbital research (primarily biological and materials science) lab, which is an entirely different facility. Additionally, the shuttle fleet could be grounded during a Trailblazer mission. Neither scenario should stop Trailblazer from proceeding or disrupt a Trailblazer mission in progress.

6. *No more than $3-6 billion increase in NASA annual budget for Trailblazer LTV activities*

A return to the moon is a major endeavor and no amount of cost cutting measures will trivialize the budgetary resources necessary to conduct such a mission. Yet, given the need for ongoing shuttle, station, aeronautics, and robotic missions, it would not be prudent to expect Congress to devote more than a few billion of NASA's annual budget to initial lunar transportation (This requirement does not speak to the surface base as the base lies beyond the scope of this dissertation.).

7. *Five to ten year development timeline from concept to first crew landing*

This cannot be a program where civil servants and contractors devote their entire career to seeing it launch – as has been done in both shuttle and station programs. A primary cause of costs spiraling out of control is the extension of program development well past the intended launch dates. This program is relatively small in size and scope and if it cannot be launched in a reasonable period of time, then perhaps that is evidence that technology has not reached an adequate point of maturity for the project.

8. *Ten year design lifetime*

This is a sufficient period of time to obtain sufficient science/engineering results to determine future priorities. A life span, including scheduled major research initiatives,

should be planned out early in the design phases to ensure that the program is properly designed for all issues generated by its operating timeline.

9. United States mission with limited or no foreign participation

It is often stated that space missions are so expensive that no one nation can conduct them alone. While that may be true for some nations, it has never been true for America. A simple glance at other major American initiatives (Panama Canal, Hoover Dam, Strategic Defense Initiative, National Missile Defense etc.) reveal that America has always been capable of, and committed to, greater expenditures than human space projects such as Apollo, the Space Shuttle, and Trailblazer. Space missions are expensive, and it is perhaps politically easier to share costs, but using the International Space Station as an example, it is arguable that the original Space Station Freedom concept would have ultimately been less expensive for America than the final US contribution to the International Space Station Alpha. ISS proved that international partnerships do not necessarily reduce cost, and can potentially increase cost significantly. In truth, international missions merely allow the participating countries to participate in space activities that require a greater level of political commitment than what their respective governments are willing to provide by themselves.

International participation increases the number of organizations that will have the ability to add cost, risk and complexity to mission requirements, while decreasing the areas in which the Untied States can provide technological leadership and maintain its current expertise. Where political considerations advise doing so, it may prove necessary for Trailblazer to use some international participation, but in all other situations the program should be strictly American. There is significant room for international

expansion beyond the initial capability and the National Aeronautics and Space Act does provide for international participation. International outposts could be landed at the Trailblazer site, incorporating crews and experiments from multiple nations. Trailblazer should ideally be the vanguard of a potentially international "city" on the moon. However, the basic Trailblazer mission should be American.

10. Minimize ground operations support team (flight controllers, program offices, etc.).

Operations are often the largest ongoing cost of a space program. The space shuttle and space station programs both have large mission control teams, program offices, configuration management teams, etc. Flight control teams should be limited to front rooms (without support rooms) whenever feasible and where not feasible, the size of the support rooms should be carefully controlled. This implies a need for highly sophisticated onboard software for mission management and systems monitoring. Mission-specific software parameters should be calculated by the onboard software, rather than by ground computers, wherever possible. If this can be accomplished, staffing costs can be significantly reduced. Program offices should be kept small and be given sufficient authority to enforce cost controlling measures.

1.12 Dissertation Objectives

In order to demonstrate that a Trailblazer lunar transfer vehicle can satisfy the previously mentioned mission requirements and constraints, this dissertation must satisfy the following basic objectives:

1. Complete a preliminary design of a lunar transfer vehicle utilizing primarily existing technology that can be launched without the use of super-heavy lift boosters.

2. Complete a cost estimation of the entire lunar transfer vehicle program that shows Trailblazer costs to be within reasonable budget levels.

As a result of this research, an assessment can be made as to whether or not human lunar travel is feasible in the immediate future without the development of a new super-heavy lift booster.

(Except where specified otherwise, SI units will be used throughout this dissertation.).

Chapter Two – Review of the Literature

2.1 Overview

This dissertation represents an attempt to develop a conceptual design of a lunar transfer vehicle that is attainable within the constraints of present-day technology and present-day launch infrastructures. While spacecraft design is a relatively modern field, enough spacecraft have been designed that there is a growing collection of literature relating to the process of designing spacecraft. The complexity of space vehicles is such that space agencies and space businesses devote considerable manpower and organizational effort to ensure the groundwork is laid for a proper design before the first piece of hardware is purchased. Additionally, there have been numerous designs of lunar transfer vehicles that are worth considering, from both the perspective of taking note of the technical aspects of their design as well as the perspective of considering why these designs were never incorporated into lunar programs.

2.2 Spacecraft Design Literature

Fortescue and Stark's Spacecraft Systems Engineering focuses, as the title suggests, on spacecraft systems. There is little emphasis on how those systems are integrated to form a complete spacecraft (1995). It does, however, briefly link the systems together through a systems engineering chapter towards the end of the text. An emphasis is placed on the spacecraft bus, rather than the payload.

In Spacecraft Mission Design, Brown attempts to concisely list the "most practical tools" for early spacecraft design studies (1998). However, unlike Fortescue and Stark, he focuses almost exclusively on orbit design, not spacecraft systems. While

his orbital analysis is limited to two-body motion, it does provide a superior summary than that of most of the other authors reviewed here.

Griffin and French go into greater detail with respect to systems engineering in the text Space Vehicle Design (1991). They relate the following definition: "Space systems engineering is the art and science of developing an operable system capable of meeting mission requirements within imposed constraints including (but not limited to) mass, cost, and schedule" (Griffin and French, 1991).

The process of systems engineering naturally produces conflicts as the optimal solution for one aspect of a system will invariably come at a cost that degrades the solution for another aspect of that same system. The goal of systems engineering is to accomplish an effective resolution of these conflicts in an effective and productive manner (Griffin and French, 1991).

Despite the extensive analytical tools available to engineers, there is no clear-cut solution to many of these conflicts. Hence, space systems engineering is partially art, as opposed to pure science. Both detailed analyses and educated human judgment are required to produce a viable space system (Griffin and French, 1991).

They explain that this process is conducted through the use of requirements. Griffin and French divide requirements into two sets: top-level requirements and functional requirements. The top-level requirements are derived from the basic goals and constraints of a given space mission. Generally, these goals are described in terms of the target and activity - i.e. orbit Venus and map the planetary surface. Constraints may also include operational dates, costs, international partnerships, etc. (Griffin and French, 1991).

Functional requirements are in turn derived from the top-level requirements. Functional requirements define what a space vehicle's systems and subsystems must accomplish in order to successfully complete the mission. They convert the top-level requirements into specific engineering requirements such as communications bandwidth, delta-v's, orbital inclinations and altitudes, and other such mission elements (Griffin and French, 1991).

At the stage of forming functional requirements it is important to apply critical thinking skills in evaluating potential requirements. Unrealistic requirements may, for instance, arbitrarily assume the availability of currently non-existent technology or may fail to consider its impact on other systems. Failure to correct such requirements early in the design process can lead to significant cost and schedule overruns. Additionally, unnecessary requirements or excessively tight requirements can further increase the cost and complexity of the design (Griffin and French, 1991).

Many details are difficult to establish early in a design program and as a result, many of the numerical values of the functional requirements will not initially be available. This changes as the design progresses. However, it is important to firmly establish and freeze all elements of the functional requirements while the design is still in the early stages. This is the only way to obtain a reasonable degree of cost control and stability in the program. An absolute freezing of requirements is counterproductive, but a specific coordination and review process should be in place to ensure that any changes made are necessary and in the best interests of the program (Griffin and French, 1991).

Several tools are useful in developing the space systems defined by a set of requirements. Among them are functional block diagrams and trade off analyses. The

functional block diagram is used to demonstrate the relationships of vehicle or mission elements. At the highest level it can demonstrate relationships between spacecraft, ground systems, mission operations, facilities, or users. At a more detailed level it can demonstrate relationships between a spacecraft's propulsion, guidance, electrical, and thermal systems. However, the functional block diagram can complicate the design process if it is carried too far. Any documentation produced in the form of functional block diagrams must be maintained throughout the design process. If diagrams are used all the way down to the subsystem component level, maintenance of the diagrams could become an overwhelming task as spacecraft systems are changed (Griffin and French, 1991).

Trade-off analyses are used to help reach a compromise solution to the various requirements and constraints. A combination of heuristic algorithms, analytical models, and sound engineering judgment are required to trade various design options, such as propulsion options, communication systems, and power systems (Griffin and French, 1991).

One particularly complex trade in spacecraft design involves the use of new or existing technology. Each has its own advantages and disadvantages. Obviously, in situations where existing technology cannot do the job, it is clear that new technology must be developed. Alternately, in situations where well-known technology exists and is already in use to do the exact job under question, there is little motivation to use new technology. Most situations, however, are less clear-cut and trades must be made between adapting existing technology and developing new technology (Griffin and French, 1991).

Existing technology is often less expensive and more readily available. There is also often a lower risk associated with existing technology. However, many components are not designed for space flight and can only be adapted for use in space vehicles with increased cost or risk that may offset the economic value of using existing technology. Further, older technology runs the risk of becoming obsolete, particularly in the area of computers and other electronic systems (Griffin and French, 1991).

Incorporating new technology may produce advantages of higher efficiency, lower mass, or lower volume. Such savings could have significant impacts throughout the vehicle. However, these changes are most beneficial in the early stages of design. Once the design is well advanced, this new technology could actually increase cost and complexity. The new technology may be incompatible with other existing components of the vehicle or its support systems, forcing costly redesigns in other areas. Additionally, there may be higher production costs associated with the delivery of components based on new technology (Griffin and French, 1991).

One of the first texts to be entirely devoted to addressing the process of spacecraft preliminary design was Larson and Wertz's Space Mission Analysis and Design (1992). The goal of their text is to

> "begin with a 'blank sheet of paper' and design a space mission to meet a set of broad, often poorly defined, objectives. You should be able to define the mission in sufficient detail to identify principal drivers and make a preliminary assessment of overall performance, size, cost, and risk."

The text was written by a group of more than 50 senior space engineers and emphasizes low Earth orbit unmanned spacecraft. The FireSat satellite is used as an example of design principles throughout the text.

Larson and Wertz advocate an iterative design process for space missions as follows:

Define Objectives	A.	Define broad objectives and constraints
	B.	Estimate quantitative mission needs and requirements
Characterize the Mission	C.	Define alternative mission concepts
	D.	Define alternative mission architectures
	E.	Identify system drivers for each
	F.	Characterize mission concepts and architectures
Evaluate the Mission	G.	Identify driving requirements
	H.	Evaluate mission utility
	I.	Define mission concept (baseline).
Define Requirements	J.	Define system requirements
	K.	Allocate requirements to system elements

(Larson and Wertz, 1992)

Successive iterations through this process will lead to a more detailed and better-defined space mission concept.

A much earlier effort, Seifert's Space Technology (1959), is not nearly as extensive, but it does devote a chapter to spacecraft design, making efforts to point out the importance of a systems engineering approach. Seifert points out that, "a missile or space vehicle is a complex conglomeration of as many as 300,000 items, each of which must function correctly in the design environment. Failure of one of these items to perform satisfactorily may cause newspaper headlines such as 'Missile Fizzles'" (Seifert, 1959).

He points out that the design of each subsystem should be made on the basis of its place in the overall system and the interactions that exist between the subsystems. The optimal complete system is not necessarily the sum of the optimum of each subsystem. Most spacecraft exist in three to four of the following design environments: pre-launch, ascent flight, space flight, and re-entry. While some do not re-enter, all pass through the other three phases (whether as active vehicles or as cargo on another vehicle) and their

designs must account for the demands of each flight phase. He advocates making a parametric formulation of the major features and their interactions in the complete vehicle system, so as to determine the characteristics of the design and the performance, as well as to develop a list of trade-off costs between the various design considerations (Seifert, 1959).

Wertz and Larson return to the spacecraft design process with Reducing Space Mission Cost (1996). This text applies lessons from the Soviet space program and the LightSat community in America and Europe. It also incorporates traditional cost reduction methods such as Design-to-Cost and Concurrent Engineering, as well as radical cost reduction methods involving fundamental changes to how satellites are built, bought, and operated. The book explains how to consider these approaches and make the proper selection during the spacecraft design process (Wertz, Larson, 1996).

In a similar vein, Boden and Larson offer Cost-Effective Space Mission Operations (1996). This text focuses on the mission operations aspect and considers how to trade the future cost of operations against current development costs. Involvement of the mission operations manager in the early stages of developing the mission is of paramount importance, as is the importance of developing mission operations concepts from the very beginning of the project (Boden and Larson, 1996).

Another systems engineering text related to spacecraft design is Hammond's Space Transportation: A Systems Approach to Analysis and Design (1999). He defines systems engineering as "the discipline of developing and engineering complex systems." Disciplines such as structures, propulsion, aerodynamics, financial accounting, human factors, etc. are integrated into a team effort. A systems engineer must follow a

structured, multidisciplinary process to integrate various points of view while minimizing risks and meeting the needs of the customer. The customer's needs must be translated into functional requirements, from which the system architecture is developed. Requirements are then allocated to elements of the system design and the resulting product must be verified to ensure that it meets the customer's original needs (Hammond, 1999).

The design process involves a number of iterative steps to produce a final product. Often, the process is divided into three phases or levels of design: Conceptual Design (Phase A), Preliminary Design (Phase B), and Detail Design (Phases C and D) (Hammond, 1999).

The Conceptual Design Phase is of particular importance in the design process because life cycle costs are largely determined by the conceptual design and are very difficult to change beyond this stage. It is the most important time in the life cycle of a space transportation system because both good and bad features of the resulting design are locked in during this phase. Conceptual design answers the basic questions of configuration arrangement, payload, vehicle size, mass, and performance. Parametric trade studies are conducted using preliminary estimates of vehicle performance. Different engine pod layouts can be considered and various orbits are analyzed. In this phase, the feasibility of the design to accomplish a given mission is established, but the details of the configuration remain open to change. This phase is essentially a "paper study" only. The purpose of this phase is to evaluate potential advances in technology and investigate different operational modes. These designs must be credible enough to

inspire confidence in the results. The capability must also be present to evaluate promising configurations in greater depth (Hammond, 1999).

The latest text in Larson's series is Larson and Pranke's Human Spaceflight Mission Analysis and Design (1999). It attempts to provided a comprehensive overview to the spacecraft design process, geared towards human missions for Earth, Moon, and Mars. Larson and Pranke compiled extensive lists of sizing equations, illustrations, tables, and cases studies. It is essentially the same concept as Larson and Wertz's Space Mission Analysis and Design, but applied to human space missions as opposed to robotic spacecraft (Larson and Pranke, 1999).

Campbell brings out the importance of integrating Human Engineering into the spacecraft design process (2000). He defines Human Engineering as, "the application of human factors knowledge in a systems engineering context. Human Engineering processes are used to ensure that programs effectively integrate operators, maintainers, and other critical personnel into missions and systems. Human Engineering is an essential part of systems engineering and is performed as part of multi-discipline concurrent engineering teams. Human Engineering processes are used to define concepts and requirements for missions and systems, based on the characteristics of humans who will participate in those missions and systems, and ensuring that the requirements are met through design, fabrication, integration and operations" (Campbell, 2000).

Human Engineering is concerned with the integration of flight crews with spacecraft, as well as the integration of ground personnel with systems such as flight processing, mission control, and Earth-space communications facilities. Human

Engineering is required where any mission-critical human function is performed, from mundane tasks such as eating and sleeping, to more complex operations such as in-flight maintenance and orbital assembly of space structures.

2.3 Spacecraft Design Standards and Tools

Since the early days of the space program, NASA has developed Human Engineering standards to regulate the design of human spacecraft. Developed in the mid-seventies, MSFC-STD-512A replaced its 1966 predecessor, MSFC-STD-267A (MSFC-STD-512A, 1976). The goal of this standard was to "provide specific descriptive design information for use by the aerospace community to ensure proper integration of manned requirements with those of other aerospace disciplines, and to assist in verifying proper operation of zero gravity systems" (MSFC-STD-512A, 1976). It focuses on all aspects of human interaction with a spacecraft and the space environment and is intended to be used as a guide throughout the design process.

In 1995, NASA-STD-3000 replaced MSFC-STD-512A. Its stated goal is "to provide a single, comprehensive document defining all generic requirements for space facilities and related equipment which directly interface with crewmembers" (NASA-STD-3000, 1995). Its requirements apply to launch, entry, on-orbit, and extraterrestrial space environments. Its scope is concerned with space human factors, namely the application of human factors knowledge to the spacecraft environment. Like its predecessor, it specifies design requirements that spacecraft must incorporate if they are to carry humans as passengers or crew.

Supplementing NASA-STD-3000 is NASA-STD-3000/T, the International Space Station Flight Crew Integration Standard. This is the ISS program contractually binding

man systems integration design requirements. The data in NASA-STD-3000/T are a subset of the data found in NASA-STD-3000. It defines the firm requirements that are applicable to the ISS program only and is concerned with flight crew interfaces with the station. It replaces NASA-STD-3000 Volume IV, Space Station Freedom Man-Systems Integration Standards.

NASA also adds an additional level to NASA-sponsored design processes. In order to verify that a design satisfies program requirements, a design review process is implemented at various milestones of the vehicle design (NASA SP-6502). Objectives of design reviews are as follows:

1. To evaluate the capability of the design to meet the total system requirements
2. To determine the effects of procurement, assembly, test, shipping, storage, human factors, and maintenance on the achievement of the design goals
3. To identify problems of process control, production, and parts and material procurement
4. To consider the effects on performance of proposed configuration changes
5. To evaluate the operational functions of the design with respect to the current known state-of-the-art
6. To evaluate the adequacy of the specification to meet the intended operational use
7. To determine whether the design conforms with the specification requirements
8. To provide for optimization of design within the functional performance requirements

(NASA SP-6502)

Reviews are generally grouped into one of five milestone categories:

1. Preliminary design review (at system, subsystem, and component level).
2. Prepackaging review (for electrical and electromechanical components).
3. Prerelease review (for all components prior to manufacture, also at subsystem level by concurrent reviews at component level).
4. Acceptance reviews (for all levels).
5. Special purpose reviews and buy-offs.

(NASA SP-6502)

Properly applied, the design review process effectively reduces the technical risk of a space mission while also controlling cost (NASA SP-6502). In practice, the latter remains a questionable conclusion, while the success rate of human spaceflight does speak well for the former claim. The NASA document continues to describe the purpose

of each design review, review team members and duties, necessary data inputs and outputs, and recommended preparation and meeting time for review team members and other participants (NASA SP-6502).

Focusing more on the cost impacts of spacecraft design, Reynerson developed a tool to model lunar and Martian exploration missions with an emphasis on cost reduction through variation of key mission requirements. The model uses parameters such as power, weight, volume, crew size and endurance to characterize spacecraft payloads.

This model consists of both an engineering model and a cost model. The previously mentioned parameters are inputs to the engineering model, which generates outputs of spacecraft mass, power, and volume. The cost model then takes the spacecraft mass as an input to generate cost data (Reynerson, 2000).

Reynerson described one of the principal contributions of this tool as its ability to directly show the impact of payload requirements on cost. Or, alternately, it can show the amount of supportable payload given a limit on the initial investment amount (Reynerson, 2000). While such a tradeoff ability is paramount for commercial space ventures, it is also significant in government ventures, given tendencies of governments to cap space activities at specific funding levels.

2.4 Lunar Mission Literature

There has been no shortage of designs for lunar missions since Apollo. A brief survey of some of the key design studies will be reviewed in this section. This review will consider only American lunar designs, though the Soviet Union nearly succeeded with its lunar plan in the sixties and currently both Russian and Chinese space advocates have well-defined lunar plans (though neither group has governmental support).

The possibility of post-Apollo lunar missions actually began before the lunar landings. In 1964, Boeing prepared a report for NASA describing Lunar Exploration Systems for Apollo (LESA) as a follow-on to the Apollo missions (Portree, 2001). LESA assumed Saturn V rockets for the initial stages, but assumed heavier lift vehicles would be developed as the program progressed. LESA used a modified Apollo LM for lunar landing and ascent (Wade, 2002).

A flurry of post-Apollo lunar designs were proposed using a combination of Apollo and Gemini technology, but in an all-encompassing storm of budget cuts, Apollo itself was cut back and post-Apollo human spaceflight activities were reduced to Skylab, Apollo-Soyuz Test Program and the Space Shuttle. Official sanction would not be given to lunar exploration ideas until the late eighties.

NASA provided a 90-Day Report to President Bush in November of 1989 to respond to his call to return to the Moon. This report assumed development of a launch vehicle with a 140-ton capacity and called for extensive additions to Space Station Freedom (Portree, 2002).

In May of 1991, the Space Exploration Initiative (SEI) Synthesis Group released a series of possible architectures for human exploration of space. The Synthesis Group's Mars Exploration Architecture included a series of precursor lunar missions to prepare for a Mars expedition. Their proposed Lunar Transportation System (LTS) is composed of two vehicles, a LTV and a Lunar Excursion Vehicle (LEV). It is capable of transporting a crew of six from LEO to the lunar surface. The LTV is composed of two stages: a Trans-Lunar Injection (TLI) stage and a Lunar Orbit Insertion/Trans-Earth Injection (LOI/TEI) stage. The LEV is a single stage rocket. All stages use RL-10

derived engines, using liquid oxygen/liquid hydrogen propellant, with a thermal system sized to provide boiloff management for up to 60 days in LEO. No mention is made of how this boiloff management technology (which does not currently exist) is to be developed. An ELV with a 150-ton payload capacity to a 160 nautical mile Earth orbit is assumed (Cooke, Weary and Kaplan, 1991).

Recognizing that other lunar proposals were dead in the water due to their mammoth budgets, Boeing proposed a Lunar Campsite concept in 1991. Somewhat similar to its old LESA concept, Boeing's approach used a 94.3-ton Crew Vehicle with a crew of four astronauts. The vehicle consisted of a 8-ton crew capsule, 3.7 tons of supplies, two rovers and scientific equipment totaling 3.2 tons, four engines and four landing legs. It was attached to a 92.7-ton booster, which provided TLI propulsion. It employed a direct trajectory from LEO to the lunar surface. The return flight was direct from lunar surface to Earth surface, employing Apollo-style direct entry (Portree, 2002).

The year 1992 saw the development of the next major NASA lunar concept: First Lunar Outpost (FLO). FLO was developed based on SEI and Boeing concepts. FLO required four heavy lift boosters, each placing 120 tons into LEO. The fourth booster contained the LTV. (The previous three were for the surface habitat.). Notably, the LTV's Crew Lander did use storable propellants, rather than cryogenic propellants, thus evading the technology hurdle of storing cryogenic fuel. The Reentry Capsule resembled the Apollo Command Module, using direct entry and splashdown at sea (Portree, 2002).

In 1993, NASA-JSC engineer Kent Joosten proposed the LUNOX mission as a revision to NASA's lunar plans in an attempt to reduce the costs. The key elements of this plan were: use of lunar oxygen as a propellant, shipping most cargo separate from the

crew, and involving Russia as a partner. Earlier studies had focused on mining the moon for fuel, but they did not assume the use of that fuel to return the crew. Separating the cargo from the crew further reduced the burden on the LTV. Finally, use of Russia improved (but did not solve) the Earth launch problem by gaining access to the Russian Energia booster for cargo flights. NASA would still need to develop shuttle-derived heavy lift boosters for the piloted lander. The LTV is propelled from LEO by a TLI stage and is placed on a course for a direct surface landing. On the surface, the LTV is refueled with liquid oxygen manufactured on the moon. The LTV returns to Earth on a direct trajectory, with an Apollo-style capsule used for entry (Portree, 2002).

Somewhat discouraged with the lack of support from Washington for NASA's annual lunar mission redesigns, private organizations began to develop their own conceptual designs. The Artemis Society is a private organization established in the mid 1990s that seeks to conduct a lunar mission through commercially raised funds. Their LTV uses a Spacehab derived crew compartment, mated to two service modules and a propulsion module. During lunar transfer, the LTV is mated to a Lunar Exploration Base and Descent Stage and an open-cockpit Ascent stage (which at least in concept strongly mirrors the NASA HLR open-cockpit lander described later in this chapter). Propulsive braking is used to capture into not only lunar orbit, but also Earth orbit at the end of the mission (Artemis Project Website, 2002). All details of the Artemis LTV design are not publicly available, but from the limited overviews provided, it appears that their design does not properly consider the delta-v required for orbital maneuvers, particularly TLI, LOI, TEI, and most significantly end-of-mission Earth orbital capture.

Meanwhile, NASA continued its push for a lunar program. In September of 1995, NASA Administrator Goldin initiated the Human Lunar Return (HLR) study. For the first time, a serious NASA lunar plan did not assume the development of a Saturn class super-booster, nor did it assume the availability of the doomed Energia. This led to impressive budget estimates of only $2.5 billion per lunar mission. Only shuttle and Proton launches were baselined, though extensive ISS support was required. It did, however, assume development of a Russian liquid hydrogen-liquid oxygen fourth stage for the Proton (that to this date has not successfully flown). The LTV utilized a space station module derived Command Module, a 30-foot diameter aerobrake, and a propulsion system. The LTV is propelled from LEO by two 20-ton TLI stages, each burning hydrazine and nitrogen tetroxide (Portree, 2002). One of its more controversial aspects, which led to considerable resistance from the Astronaut Office, was the use of an open-cockpit Lunar Landing Vehicle, shown in figure 2-1 (All tables and figures are located in the Appendix). The open-cockpit lander was an attempt at an extremely low cost lunar lander. Essentially, it was a platform on which two astronauts in spacesuits could stand (exposed to space, hence the term "open-cockpit"), mounted on top of an engine and fuel tank assembly. That and other cost-cutting measures gave some the impression that safety was being compromised in the name of budget reduction. HLR was also and perhaps more severely threatened by the announcement of possible signs of life in a Martian meteorite. Between those two issues, HLR quickly and quietly faded into the background as Mars research began to dominate NASA's post-ISS planning. For a period of several years, official lunar activities could only be addressed in the context of "necessary preparations to support a Mars mission."

All discussion, however, did not cease. Michael Duke of the Lunar and Planetary Institute in Houston proposed a new lunar concept in 1997, this time focused on ice at the lunar South Pole. The Earth-Moon L2 point is used as a staging area. Duke assumes only the shuttle for Earth to LEO transport. He does assume development of a solar-electric propulsion vehicle for transporting cargo. He uses a Crew Vehicle (CRV) based on the X-38 and a liquid hydrogen-liquid oxygen propelled Lunar-Based Vehicle (LBV) that serves as a transport vehicle, both for cargo modules and for the CRV. Chemical propellants are used to send the CRV to L2, where it is met by the LBV and carried to the lunar surface. Following the lunar stay, the CRV/LBV combined spacecraft launch on a direct entry trajectory to Earth. The CRV performs a direct entry and the LBV is discarded. Like LUNOX, Duke's concept assumes the use of in-situ manufactured propellants. Consequently, Duke assumes the problem of storage of liquid hydrogen will be solved during the course of this program's development. He also does not address the alterations that must be made to the X-38 to serve in this role, particularly the life support and thermal protection system impacts. He does, however, caution that many details of the mass estimation remain to be worked out (Portree, 2002).

Non-NASA "paper studies" also emerge periodically. Schrunk, et al's The Moon: Resources, Future Development and Colonization (1999) focuses on future utilization of the moon, primarily discussing resource utilization, but also devoting some attention to explaining several leading reasons for selecting the South Pole as an ideal location for a lunar base. Shrunk additionally describes surface base and rover concepts.

Peter Eckart's Lunar Base Design text (1999) focuses primarily on the design of a surface base, but he does address several key areas for lunar transfer vehicle design.

Eckart devotes a chapter to a communications and navigation system infrastructure. He also allocates a chapter to discuss Earth-Moon trajectory implications and in a chapter on lunar base location, he addresses orbital mechanics implications of base location.

Paul Spudis, deputy director of the Lunar and Planetary Institute, refines Duke's proposal with a design of his own in 2000. Instead of the L2 point, he uses the Earth-Moon L1 as his staging location. In a key cost-saving move, he also launches all cargo units on Delta IV rockets instead of the shuttle, reserving the shuttle only for astronaut transfers (Portree, 2002). His efforts also coincide with a shift in emphasis at NASA. With the failures of the Deep Space Two microprobes, Mars Polar Lander, and the Mars Climate Observer, political support within NASA for imminent Mars human expeditions began to fade, allowing these lunar studies to return to official study.

In the wake of the realization that human missions to Mars will not be forthcoming, there is a renewed interest in lunar travel. A new lunar study has been underway at Johnson Space Center for the past year or two, but very few details have been publicly released. Similar to Spudis' concept, it does involve L1 staging and places a space station of some kind at the Earth-Moon L1 point. It also assumes servicing and support from ISS (Fletcher, 2002).

2.5 Implications for Dissertation

A variety of spacecraft design texts provide the framework for a successful lunar transfer vehicle conceptual design. Taken as a whole, the texts examined in the literature provide a fairly complete process that can be utilized in the development of any crewed spacecraft and can be effectively applied to the design problem of a lunar transfer vehicle.

Additionally, the standards and tools reviewed in the literature provide information of paramount importance to ensure that the resulting design is compatible with its human crew and has a realistic cost.

Any design must be cognizant of the threat of budget cuts and must be developed in a manner to reduce its risk of termination at the hands of Congress. The NASA-sponsored lunar designs reviewed show either a persistent pattern of assuming Congress will somehow be won over to the idea of a sprawling, colossal extraterrestrial endeavor or perform only partial studies, leaving significant mass estimation details out – details that could potentially eliminate all of their cost savings measures. In some cases, weaknesses of previous lunar designs are repeated. For instance, lunar plans placed repeated reliance on the development of a new launch vehicle. Unfortunately, rocket booster capabilities are driven primarily by economic factors relating to the commercial satellite market, whose propulsion needs are considerably smaller than those of Saturn V or Energia class launch vehicles – the minimum size booster assumed in many lunar exploration strategies. Thus, the reliance on new super-boosters makes most lunar return strategies unrealistic and literally ensures they will never get off the ground. Any lunar travel conducted in this generation will require a system capable of being conducted at least initially without the need for new heavy lift boosters.

In this dissertation, the basic processes outlined by Larson, Wertz, Pranke, and Boden will be followed to develop the LTV conceptual design. As noted by Hammond, this will result in a basic configuration arrangement, payload, vehicle size, mass, and performance. Careful attention will be paid to the use of requirements development, as noted by Griffin and French, most importantly freezing the requirements and not

expanding them as the design progresses. The trade of new versus existing technology will be made carefully, as Griffin and French also recommend.

In the process of conducting the Human Engineering aspects of this conceptual design referred to by Campbell, NASA-STD-3000 and other relevant spacecraft design standards will be used to ensure that the design can properly accommodate a human crew. Realistic cost levels will be maintained, with vehicle/mission requirements traded as necessary to keep costs under control.

In learning from the mistakes made in previous designs, several absolutes will apply to the design work of this dissertation. It will not call for a massive Apollo-like budget increase; will not require a new launch vehicle; will not rely on unproven abilities to use in-situ resources; will fully consider delta-v requirements of orbital maneuvers; will not use an open-cockpit lander; and will not leave out excessive mass estimation details. L1 will be considered as a staging location, but no space station will be located there and no assumptions will be made about the availability of ISS to support the LTV.

Chapter Three – Cislunar Trajectories and Vehicle Overview

3.1 Trajectory Limiting Factors

Human cislunar transfer is a greater challenge than many lunar advocates realize. Despite the relative closeness of the moon as compared to other celestial bodies, the moon is still a significant distance from Earth. Crossing this void was not a trivial undertaking during the Apollo program and it remains a challenge to this day. Several limiting factors drastically impact spacecraft designs, making it difficult to develop viable lunar mission plans.

Heavy Lift Capability

The most critical limiting factor is a lack of heavy lift capability from the surface of the Earth into Low Earth Orbit (LEO). Any vehicle designed to transport people to and from the moon – and all of its fuel – must first be transported from the Earth into space. Arguably, the only boosters in world history that should truly be termed heavy lift boosters are the American Saturn V and the Soviet Energia, both of which are no longer in production. Lesser boosters such as the space shuttle, Titan IV, and even the upcoming Delta IV Heavy and Atlas V Heavy represent modern heavy lift capability, but all are grossly inferior to the Saturn and Energia in terms of payload capability to LEO. With respect to potential lunar spacecraft, these boosters can only carry spacecraft components at best, requiring in-orbit assembly for virtually any lunar transfer vehicle concept. The global political climate is such that it is extremely unlikely that Saturn/Energia class vehicles will be constructed in the near to distant future. Consequently, lunar transfer vehicle designs must be developed to accommodate this limitation.

Cryogenic Boiloff

The highest performance rocket fuels currently available are chemical cryogenic fuels (i.e. liquid oxygen and liquid hydrogen). These fuels must be maintained at super-cold levels to prevent the fuel from turning to gas and escaping. Even with the maximum possible insulation, there is a leakage rate from all cryogenic tanks currently in service. This is a problem for large spacecraft, which due to the lack of heavy lift capability require in-orbit assembly. The International Space Station, for instance, is being assembled in orbit over a period of several years. There are generally one to two months between any particular assembly flights. This would be too long for a cislunar craft. Cryogenic tanks cannot remain in Earth orbit for significant periods of time while large spacecraft are being assembled or they will lose much of their fuel to boiloff. In any assembly process, they would need to be the last components launched; and even then boiloff will still occur. It might not be possible to launch more than one tank to such a spacecraft. This tank, of course, would be limited to the payload capacity of Atlas/Delta/Titan class boosters. Multiple simultaneous launches could alleviate this problem slightly, but there are not many launch sites around the world capable of launching such boosters. Thus, the total fuel capacity for any lunar transfer vehicle is significantly limited, therefore reducing the size and capacity of the vehicle.

Low Performance of Storable Propellants

Storable propellants, on the other hand (typically hypergolic), can be maintained in space indefinitely. However, their performance is significantly lower than that of cryogenic fuels. Consequently, much more fuel is required for a given payload, driving the mass of the vehicle up substantially (therefore increasing the amount of fuel required to move the vehicle – a vicious cycle). This imposes a significant limiting factor on the

size of human spacecraft intended for use beyond low earth orbit. Beyond a very low vehicle mass - which may be too low for a useful LTV - the propellant and tank masses rise to astronomical proportions.

Non-Viability of Nuclear Propulsion

Nuclear propulsion is often touted as a solution to propulsion difficulties because of its high thrust and high performance, making it ideal from a propulsion standpoint for human spaceflight to the moon or to Mars. However, many technical issues remain to be solved for nuclear propulsion and the political climate renders nuclear propulsion a non-option for the foreseeable future. Additionally, because most nuclear propulsion concepts use hydrogen as a fuel, they are also affected by the same boiloff concerns as chemical cryogenic fuels.

Human Vulnerability in Cislunar Space

Beyond the protective influence of the Earth's magnetic field, astronauts are subject to increased levels of radiation. In LEO, astronauts are protected to a degree by the Earth's magnetic field. Without that protection, Solar Particle Events and Galactic Cosmic Radiation can be particularly dangerous. Additionally, whether the astronauts are inside the magnetic field or beyond, they are subject to the physiological deconditioning effects of microgravity. This is critical for the outbound trajectory leg, because it is assumed that when a spacecraft crew reaches a lunar destination there will be no time for reconditioning. The crew will need to immediately begin to conduct operations of some sort. It is not even known with certainty that reconditioning can be accomplished in a low gravity environment. Transfer time must be minimized, eliminating efficient low thrust systems such as ion or plasma rockets or time-consuming trajectories such as Weak Stability Boundary. Consequently, the safety of the flight crew

dictates that travel times should be kept as short as possible (Longer flight times also increase vehicle mass due to the need for additional food and other life support consumables.). It may be possible that low thrust systems can be used for LTV components that do not carry crew. However, this option is not investigated in this dissertation.

These factors combine to produce a problematic situation in Earth orbit. If the crew module is too massive, the propulsion system will not be able to transport it to the moon unless the tank volume is increased. But if the tank volume is increased too far, the mass of the propulsion system will exceed the capabilities of any current boosters. Consequently, any lunar transfer vehicles must be relatively small. Additionally, due to microgravity and radiation exposure concerns, crew travel time in cislunar space must be minimized.

3.2 Cislunar Trajectories Investigated

Overcoming these difficulties is a complex process. In addition to the spacecraft design, the spacecraft's trajectory must also be designed. This trajectory must be attainable by an LTV that can be placed in LEO by present-day booster systems.

Two Earth orbital origin points will be considered – one consistent with the International Space Station's inclination, 51.6 degrees, and one consistent with a due east launch from Kennedy Space Center, 28.5 degrees. Both will use the ISS orbital altitude, 407 km. Many advocate the use of the International Space Station to facilitate lunar missions. Unfortunately, it is generally known that using the ISS inclination increases the propellant cost of lunar travel. Because the moon's orbit lies at a roughly 5.1 degree inclination, the greater the LTV's orbital inclination from this value, the more fuel will be

required to reach lunar orbit. Very rarely do advocates of using the station take the time to quantify this impact.

This study will investigate transfer to and from a lunar polar orbit. The polar orbit does pose some problems in certain translunar trajectories. It is, however, necessary in order to reach a polar landing site. Many lunar missions are designed around polar outposts because surface thermal concerns are greatly reduced at the poles and because there is general belief that the poles contain lunar ice.

A multi-conic trajectory will be used to analyze the flight time between these two Earth origin points and lunar polar orbit. Both direct trajectories and trajectories using the Lagrange (also called libration) point will be considered. Lagrange points are five points in the Earth-Moon system where the gravities of the Earth and the moon create balance points. This paper will use the L1 point, the Lagrange point located directly between the Earth and the moon.

In order to conserve propellant, aerocapture is assumed for all Earth-inbound trajectories. Capture at L1 and lunar orbit will require propulsive insertion.

3.3 Algorithms Used

All orbital parameters are calculated with the aid of numerical analysis programs developed in the early nineties at NASA's Johnson Space Center. NASA employee Sam Wilson, who has since moved to Elgin Software, wrote these programs.

"Procedure E2LP is a program to compute and print a description of an impulsive tangential departure from a circular earth orbit for transfer to the L1 or the L2 libration point in a specified flight time, using the multi-conic method to compute the 3-body trajectory. The moon's geocentric orbit is modeled as a circle" (Wilson, 1991).

Procedure LPLS did not contain a documentation file, but it is a program to compute and print a description of an impulsive tangential departure from the L1 or the L2 libration point for transfer to a circular lunar orbit in a specified flight time.

Similarly, procedure ESLC did not contain documentation. It, however, calculates a range of delta-v's for trans-lunar injection and lunar orbital insertion, and flight times for multi-conic trajectories between Low Earth Orbit and Low Lunar Orbit.

"Procedure LOEO is a program for computing and displaying data relating to optimum transfers between a circular selenocentric orbit and an earth orbit, achieved by aerocapture" (Wilson, 1996).

Finally, procedure MOON2LP also did not contain documentation. It calculates departure and arrival delta-v's for transfers from a circular lunar orbit to the L1 or L2 libration point in a specified flight time.

3.4 Trajectory Determinations

Outbound

The most obvious outbound trajectory is a direct transfer from LEO to LLO. If the LTV departs from the space station, it will be leaving from a 51.6-degree inclination orbit. If it is placed in orbit from a due east Kennedy Space Center launch and does not dock with ISS, it will be leaving from a 28.5-degree inclination. Table 3-1 describes computational results giving the delta-v's and flight times associated with such transfers.

In addition to transfers to LLO, it is also possible to pursue trajectories to L1 and from there continue to LEO. The advantage to doing so is that it allows a lower delta-v from LEO. Because there is a limit to the amount of fuel that can be brought to LEO, traveling to L1 can allow for larger payload masses. At L1 the LTV would drop its

cryogenic propulsion unit and exchange it for a hypergolic one waiting at L1, using this new stage to continue the journey. This is similar to traditional rocket staging, except that the lower stage does not carry the mass of the upper stage. The upper stage is pre-deployed by another rocket. The payload will rendezvous with this upper stage and then dock with it. I am terming this scheme "rendezvous staging." The question to be answered is whether or not rendezvous staging will provide any advantages for human lunar flight. Table 3-2 lists delta-v's and flight times for travel from LEO to L1.

It is perhaps difficult to discern the advantages of rendezvous staging from these tables. Graphing the data as shown in Figure 3-1 gives more insight.

The computer codes employed for these various trajectories did not compute over the same flight time intervals, but viewing the trajectories on a graph allows the researcher to gain insight into their relative delta-v (and thus fuel) costs. It is most demanding on the LTV's propulsion system to attempt a direct flight to LLO from the space station inclination. A departure from 28.5 degrees going only to L1 saves a considerable amount of delta-v. Additionally, it is clear that a 3 to 3.5-day flight time offers the best compromise of mission duration and fuel savings.

Of course, this is only useful if a propulsion module waiting at L1 can transport the LTV from there to LLO. Table 3-3 and Figure 3-2 numerically and graphically illustrate the delta-v requirements to move from L1 to LLO under various flight times.

There is not much difference between a 1 and 2-day flight time, but a significant savings exists between a 12-hour and 24-hour fight time. Thus using rendezvous staging, a LTV could move from LEO to LLO in roughly 4 to 4.5 days.

Inbound

Just as with the outbound trajectories, the most obvious paths are direct transfers from LLO to LEO. Again, this trajectory may terminate either in a 28.5-degree inclination or a 51.6-degree inclination, depending on whether the LTV is to enter an orbit compatible with the space station or with a vehicle arriving from a KSC due east launch. Table 3-4 indicates that it is more difficult to reach an ISS orbit from the moon. In fact, in some cases it is not possible to reach an ISS inclination.

Because a propulsion system might not have the fuel to complete an entire transfer, it is important to consider the option of using the L1 point as a rendezvous staging location. Table 3-5 indicates delta-v and flight time parameters for travel from lunar orbit to L1.

The data from the preceding two tables are combined on Figure 3-3 to show the relative performance requirements for LLO departure options.

The difference in delta-v's from LLO to L1 versus LLO to LEO is not as significant as the differences noted during the outbound trajectories. The pattern does still hold, however, that L1 is the easiest destination to reach, followed by LEO with a 28.5-degree inclination. The highest delta-v requirement is for transfer to the ISS inclination of 51.6 degrees.

If rendezvous staging is used, a third propulsion stage is picked up at L1. Table 3-6 and Figure 3-4 indicate the delta-v requirements for a transfer from L1 to LEO.

Again, 28.5 is shown to be the minimum delta-v trajectory, though in this case it is only a small difference over the trajectory to a 51.6 inclination.

Abort Options – Deorbit and Direct Entry

This research is conducted in the framework of a LTV preliminary design concept that is intended for cyclic travel between LEO and LLO, in both locations rendezvousing with other vehicles that shuttle between the respective surfaces and orbits. The space shuttle (or other crewed ascent vehicle) would dock with the LTV in LEO to transfer a crew to the LTV. Upon reaching LLO, the LTV would rendezvous with a lunar ascent/descent vehicle, which would transport the crew between LLO and the lunar surface. The process would be reduced for a return flight. Under nominal conditions, the LTV would never enter Earth's atmosphere to land on Earth.

However, in an abort or emergency scenario, rather than stop in LEO, the LTV could conceivably perform a direct atmospheric entry from either LLO or L1. This was the approach used by the Apollo program. The delta-v's for these approaches can be approximated from the aerocapture calculations. A direct entry from L1 is roughly the same delta-v as that for a transfer from L1 to LEO utilizing aerocapture. Similarly, direct entry from LLO is roughly equal to a transfer from LLO to LEO, also utilizing aerocapture.

Should the transfer vehicle stop in orbit and then need to select a deorbit option, the deorbit delta-v from a LEO altitude of 407 km is found from a simple Hohman transfer to an altitude of 150 km (Larson and Wertz, 1992). Orbital inclination is irrelevant, affecting only landing site options. This delta-v is found to be 743.3 m/s.

3.5 Potential Trajectory Solutions

A flight plan cannot be developed solely on the basis of delta-v requirements. However, from the data computed above, several general trajectory schemes emerge: a

minimum total mission delta-V trajectory, an outbound rendezvous staging trajectory, and a double rendezvous staging trajectory.

The Minimum Total Mission Delta-V Trajectory is the most obvious trajectory and it produces the minimum total fuel expenditure for the mission. It is formed from the inbound and outbound direct transfers between LEO and LLO. Of these transfers, the delta-v requirement is lowest when using a 28.5-degree inclination. The outbound delta-v requirement for a 3.23-day transfer is 4110 m/s. Inbound, the requirement is 1158 m/s for a 3-day transfer, thus yielding a total mission budget of 6.23 days and a total 5268 m/s delta-v.

The Outbound Rendezvous Staging Trajectory is a compromise between propellant tank sizing and minimized mission duration. Rendezvous staging is used between LEO and LLO, with an intermediate stop at L1 to exchange propulsion modules. The second propulsion module must be sized to complete the rest of the flight. The inbound leg is a direct transfer from LLO to LEO. All Earth orbits are at a 28.5-degree inclination. The first stage must achieve a 3878.3 m/s delta-v for a 3-day flight to L1. The second stage must complete an 890.52 m/s delta-v for a 2-day flight from L1 to LLO. It then must complete an 1158 m/s delta-v for a 3-day return flight from LLO to LEO. Thus, the second stage is responsible for a total delta-v of 2048.52 m/s. Total flight time is 8 days.

The Double Rendezvous Staging Trajectory allows for the minimum possible propellant tanks, but at the expense of mission duration. Rendezvous staging is used on both the inbound and outbound legs. The outbound leg is identical to that described for Outbound Rendezvous Staging. The inbound leg involves a 2-day flight from LLO to L1

with an 890.53 m/s delta-v. From there, a third stage is responsible for a 3-day flight from L1 to a 28.5-degree inclination Earth orbit requiring a 810.4 m/s delta-v. Thus, the first stage must achieve a 3878.3 m/s delta-v; the second stage must accommodate a total delta-v of 1781.05 m/s; and the third stage must accommodate an 810.4 m/s delta-v. This trajectory's flight time is 10 days.

3.6 Trajectory Summary

Each of the potential trajectories imposes specific requirements, not only upon the LTV propulsion system but also on the entire vehicle design. The interactions between LTV crew accommodations requirements, propulsion systems limitations, and these trajectories will drive the selection of a particular scheme. As will be shown in subsequent chapters, a Double Rendezvous Staging Trajectory will be required in order to satisfy all mission constraints.

3.7 Implications of Using L1

Overview

The Earth-Moon L1 point has never been used in actual spaceflight, but it has played pivotal roles in many lunar mission architectures. The Trailblazer LTV design is no exception and it is imperative to properly size any impacts of using the L1 point. Without the use of L1, the Trailblazer concept literally falls apart and cannot be salvaged. Consequently, it is of vital importance to demonstrate that a human space mission can indeed use this point by determining an order of magnitude assessment for the delta-v required to keep a spacecraft at or near the Earth-Moon L1 point.

Most orbital mechanics texts direct the majority of their attention towards what is known as the two-body problem – the motion of a system of two masses that are subject

to their mutual gravitational interactions. An example would be a spacecraft orbiting the Earth, or one orbiting the sun as it traverses interplanetary space between the orbits of Earth and Mars. Kepler's equations, Hohman transfer orbits, and the patched-conic approximation are based in the two-body problem.

Unfortunately, the real solar system is not a two-body problem. Two-body assumptions yield reasonable results unless a third body of significant mass is nearby. This is the case in the Earth-Moon system. Both the Earth and the moon, making the transfer a three-body problem, heavily affect a spacecraft on a trans-lunar trajectory. Technically, even the sun has an impact and precise studies require the application of a four-body system.

The complex array of forces and motions has puzzled mathematicians for centuries and has presented equations that have never been solved in closed form. However, these forces and motions have also produced a fortuitous network of contours of equal potential energy in the space surrounding the Earth-Moon system. Within this network are five points of gravitational equilibrium where the gravity of the Earth and moon precisely balance each other (Griffin, 1991).

These points are interchangeably referred to in literature as Lagrange points, libration points, or equilibrium points and are numbered L1 through L5. L1, L2, and L3 are referred to as collinear equilibrium points, all lying on the axis that passes through the Earth and the moon. L4 and L5 are equilateral equilibrium points, each lying on the vertex of an equilateral triangle formed by the particular point, Earth, and the moon. They are on the radius of the moon's orbit, with L4 60 degrees ahead of the moon and L5 60 degrees behind the moon. The numbering convention varies in different texts and the

numbering scheme in Figure 3-5 will be used in this paper. (Thus, L1 is the equilibrium point lying directly between Earth and the moon.)

Objects placed at these points would not experience any relative acceleration. However, it is known that while L4 and L5 are stable, L1, L2, and L3 are not. At the collinear equilibrium points, any displacement would result in a departure from the neighborhood (Kaplan, 1976). Objects will remain at the collinear points only if they are completely unperturbed. Of course, any object positioned there would be perturbed and propellant would be required to maintain its position and prevent it from drifting away. Examples of naturally occurring perturbations are solar radiation pressure, the sun's gravity, and non-circularity in the moon's orbit. Any outgassing and venting from the spacecraft, or misalignments in the attitude control thrusters will also produce perturbations.

It should be noted that there is a Lagrange system for every large object that orbits another object. For instance, there is a set of Earth-Sun Lagrange points, which are an entirely different set of points from the Earth-Moon Lagrange points. Goddard Space Flight Center's MAP probe is currently orbiting the Earth-Sun L2 point and that orbit should not be confused with an orbit around the Earth-Moon L2 point (MAP, 2002). The SOHO spacecraft is currently orbiting the Earth-Sun L1 point (SOHO, 2002). There is also a Jupiter-Sun Lagrange system. The Trojan asteroids orbit in the Jupiter-Sun L4 and L5 points. In one of the more interesting Lagrange systems, Saturn's moon Helene is actually in the L4 position belonging to the moon Dione for the Saturn-Dione Lagrange system (Dione, 2002).

The Trailblazer LTV assumes the use of the Earth-Moon L1 as a staging area. Thus, it is important to first establish that L1 staging is necessary and then to determine if it is feasible. The question of necessity can be answered fairly quickly by revisiting the Δv data compiled in this chapter.

A delta-v of 3.101 km/s is required to reach lunar orbit from LEO, while a delta-v of 3.0679 km/s is required to reach L1 from LEO. While this is a seemingly insignificant difference, there are other factors that contribute to the need to stage at L1. Capture into lunar orbit from LEO requires a 1.009 km/s Δv, while capture into L1 from LEO requires a 0.8104 km/s Δv. These two factors combined mean the following if a payload is destined for lunar orbit: the payload (1) requires more performance during the TLI burn – assuming the payload's mass does not change; (2) suffers an increased mass because the payload must perform a greater burn to capture into the target orbit; (3) requires even more performance from the TLI booster because its mass did increase. Thus, heavier payloads will require staging at L1 as available upper stages will be unable to reach lunar orbit. This limitation will be immediately evident in the chapter addressing Propulsion Module 2.

Analysis of Collinear Equilibrium Points

As previously indicated, Hohman transfers and other two-body approximations cannot be used to analyze the perturbations experienced in the vicinity of an equilibrium point. The only way to simulate the motion of a spacecraft in the Earth-Moon system is to integrate the equations of motion for the four-body problem. Since the mass of a spacecraft is too small to alter the motions of the sun, moon, or Earth, this system of equations can be simplified slightly by making the approximation $m_v=0$, where m_v is the

mass of the spacecraft. This produces the following system of equations: (Hoffman, 1993).

$$\frac{d^2 r_s}{dt^2} + G(M_e + M_s)\frac{r_s}{r^3_{se}} = GM_m\left(\frac{r_m - r_s}{r^3_{ms}} + \frac{r_m}{r^3_{em}}\right)$$

$$\frac{d^2 r_m}{dt^2} + G(M_e + M_m)\frac{r_m}{r^3_{em}} = GM_s\left(\frac{r_s - r_m}{r^3_{ms}} + \frac{r_s}{r^3_{em}}\right)$$

$$\frac{d^2 r_v}{dt^2} + GM_e\frac{r_v}{r^3_{ev}} = GM_s\left(\frac{r_s - r_v}{r^3_{sv}} + \frac{r_s}{r^3_{se}}\right) + GM_m\left(\frac{r_m - r_v}{r^3_{mv}} + \frac{r_m}{r^3_{em}}\right) + T_a$$

The subscripts s, e, m, and v denote the sun, Earth, moon, and spacecraft, respectively. T_a represents the thrust acceleration. Clearly, there is no analytic solution to these equations, but they can be numerically integrated via MATLAB, C code, or any other mathematical program.

Application of JSC Study to Trailblazer LTV Problem

Fortunately, it will not be necessary to perform such a complex mathematical analysis. Johnson Space Center engineer David Hoffman undertook the task of analyzing the stability at the Earth-Moon L2 and designing a controller to modulate T_a for purposes of stationing a communications satellite near L2 (Hoffman, 1993). An L2 satellite would enable mission planners to establish a continuous communications link between Earth and the far side of the moon, without the expense of deploying an entire network of relay satellites. If the satellite could orbit the L2 point with a large enough radius, it could obtain a line of sight with both Earth and the lunar far side.

While this application is not the intended use of an equilibrium point in the Trailblazer LTV flight path design, it does share several commonalities that make its data

applicable. First, the disturbances at L2 are the same as those at L1. Thus, any stability issues – and solutions – identified in the JSC study would directly apply to the LTV study. Second, the JSC study is actually a worse case than the LTV scenario. The goal in the JSC study is to maintain a satellite at a specified distance away from the equilibrium point. The LTV modules would prefer to be as close to the equilibrium point as possible. As will be shown later, the Δv requirement increases with radial distance, so the JSC L2 communications satellite will have a more imposing Δv requirement than the Trailblazer LTV. Thus, an LTV sized to perform the Δv identified by Hoffman will have a surplus of propellant with which to accomplish the LTV mission.

Hoffman's study developed a series of control algorithms to simulate the performance of a spacecraft in the vicinity of a collinear equilibrium point. The controllers were tested at various levels of fidelity, ranging from three-body to four-body approximations, thus including some or all perturbation sources. The algorithms were used to determine an appropriate controller for use in a spacecraft navigation system and to characterize the Δv requirements in the vicinity of a collinear equilibrium point.

Collinear Equilibrium Point Orbits

Rather than remain exactly stationary at a collinear equilibrium point, it is possible for a spacecraft to assume an orbit about the point. (It may be more technically correct to describe this as a periodic trajectory around the point instead of as an orbit. Orbit might imply a stability that does not exist, but it is much easier to say "orbit" than "periodic trajectory.") Orbits around collinear equilibrium points are frequently referred to as halo orbits. However, the halo orbit is only one of two possible orbit types. The second is a Lissajous orbit (Hoffman, 1993).

A halo orbit results when the period of in-plane motion has been set equal to the period of out-of-plane motion. A satellite in such an orbit traces out a circle/halo in the plane of the sky as seen by an observer on Earth. A Lissajous orbit, on the other hand, is the natural motion of a satellite about a collinear equilibrium point. As seen from Earth, the trace of this orbit fills out a square in the plane of the sky, with the disk of the moon occulting the central part of the square, with the size of the orbit determining the size ratio between the moon's disk and the trace of the orbit (Hoffman, 1993).

This is why Hoffman sought to maximize the size of the Lissajous orbit. The less time the moon occults the satellite's orbit, the more communications coverage the satellite can maintain with Earth. (Of course, for a halo orbit with a sufficiently large orbit, there will be no occultation at all.). However, for the LTV, this issue is irrelevant. Because the LTV is at L1 instead of L2, there is no lunar occultation. Additionally, as no attempt is being made in the LTV design to eliminate loss of signal periods, it would not matter if there were.

JSC Controller and Application to LTV Design

The data obtained by Hoffman's simulations confirms the usability of L1 for the Trailblazer LTV's mission design. Table 3-7 shows the relationship Hoffman observed between Lissajous orbit radius, communications coverage, and total accumulated Δv over an annual basis.

Figures 3-6 and 3-7 graphically show the trace of a spacecraft in the x-y and y-z planes as it pursues a halo or Lissajous orbit respectively.

A simple glance at the diagrams of both halo and Lissajous orbits makes it clear that for logistical reasons, the LTV absolutely cannot tolerate a large orbital radius. A

large radius would create nightmarish rendezvous problems, particularly in the case of the Lissajous orbit. Such problems would destroy much of the advantage of staging at L1. So it will be important for the LTV to station-keep, not simply orbit at arbitrary distances.

The Δv case for station keeping is particularly attractive. Several of the perturbing forces present in the Earth-Moon system vanish as a spacecraft approaches the equilibrium point (Hoffman, 1993). The only perturbing influence a station-keeping controller must counteract is the solar gravitational force. The solar gravitational force will pull a spacecraft away from the equilibrium point and the controller will issue thrust commands to counter this pull. Using a four-body model, Hoffman found a cumulative Δv at the end of a 365-day run to be 0.3081 m/s (Hoffman, 1993). For LTV purposes, this suggests a trivial, almost nonexistent, amount of propellant will be required.

However, it would be unwise to assume that the LTV module in question will be deposited precisely at L1. There may be position and/or velocity errors. Hoffman performed two series of simulations, one with a position error of (1500,500,1500) km in (x,y,z) coordinates and one with a velocity error of (0.01,0.005,0.005) m/s, again in (x,y,z) coordinates. The required Δv in these cases increased to 33.6246 m/s and 17.7583 m/s, respectively (Hoffman, 1993).

These Δv requirements compare approximately with the Lissajous orbit Case 2. It would be a reasonably conservative approach to use the Case 2 Δv as the performance requirement for any spacecraft intended for L1 station keeping.

Currently, no spacecraft are stationed at the Earth-Moon L1 point, but the use of the Earth-Sun L1 and L2 points along with the detailed studies of the Earth-Moon L2 point clearly demonstrate the feasibility of using the unstable collinear equilibrium points for long duration space missions with reasonably small fuel expenditures. The NASA-JSC studies of the Earth-Moon L2 point additionally reveal that the LTV can operate at the Earth-Moon L1 point without requiring a large propellant budget. Thus, the Trailblazer LTV can transport the Crew Module to lunar orbit, using L1 as a staging location.

3.8 LTV Overview

Because of the previously discussed limiting factors and L1 implications, a modular approach was required to develop a viable design concept. The LTV is composed of six different spacecraft, which act alone and in concert at various locations between LEO and the lunar surface. LTV spacecraft (to be described in more detail momentarily) are as follows:

- Crew Module (CM).
- Propulsion Module 1 (PM1).
- Aeroshell Module (AM).
- Ascent-Descent Vehicle (ADV).
- Propulsion Module 2 (PM2).
- Fuel Tanker (FT).

The LTV is not responsible for travel between the Earth's surface and LEO – that job remains with the shuttle. However, the LTV does provide all transportation from an orbiting shuttle to the surface of the moon and back.

In order to reduce docking loads and simplify the process of docking, a magnetic docking system is used for all LTV spacecraft dockings. This system allows spacecraft to capture each other with zero relative velocity and no RCS thrustings. It can also correct for greater misalignments than a non-magnetic docking system. All dockings are nominally autonomous, but the crew can perform a manual docking any time they are in one of the two vehicles being docked.

Commonality is employed across the LTV spacecraft. With the exception of the cryogenic Propulsion Module 2, all main engines are the hypergolic Boeing Rocketdyne RS-72. Also with the exception of Propulsion Module 2, all RCS engines are General Dynamics R-4Ds. (Both the RS-72 and the R-4D are commonly used on commercial satellites today.) All solar arrays are Triple Junction arrays with the same wing-mounted configuration and all vehicles use lithium polymer electrolyte batteries for secondary power. All vehicles use the same thermal loops. All vehicles carry the same navigation sensors (primarily optical sensors and INS/GPS) and software (using a derivative of Deep Space One's AutoNav) with only the CM possibly adding an Air Data system and the ADV possibly adding a laser or radar altimeter system. The same communications equipment and data formats are used across all vehicles and all vehicles have the same flight software loads (though all do not have the same number of computers). All vehicles have identical rendezvous and docking software with nearly identical hardware. It should be noted that while it is not part of their design mission, PM1 and the Fuel Tankers are capable of performing ISS reboost missions. Additionally, given a properly designed US Propulsion module, the FT would be equally capable of refueling ISS.

3.9 LTV Spacecraft Descriptions

Crew Module (CM).

The Crew Module is a heavily modified X-38. It differs substantially from the X-38 CRV variant studied by the NASA-JSC Exploration Office. Unlike the CRV, it only carries a crew of two and is sized for 14.5 days of crewed operation. The CRV propulsion stage is also replaced with a jettisonable RS-72 engine module that also has retractable solar array and radiator wing mountings. Nominally, the CM does not land. However, in the event that the shuttle fleet is grounded while a lunar mission is in progress or some other factor prevents a shuttle rendezvous, it is capable of performing a deorbit burn and Parafoil assisted landing just as a CRV X-38 would do.

Propulsion Module 1 (PM1).

Propulsion Module 1 is a reusable hypergolic stage capable of orbital refueling. It provides propulsion for the Crew Module, beginning at L1 for the outbound (Earth to moon) flight and for the entire inbound flight. It refuels multiple times. It is first partially fueled in LEO, before it is transported to L1 by PM2. It uses this fuel to capture into L1. It is refueled there, prior to its docking with the CM. It uses that fuel to take the CM to lunar orbit and capture into orbit there. It is fueled once again in lunar orbit, using that fuel (after the lunar surface mission) to return to L1 with the CM. It is fueled at L1 one final time and uses that fuel to propel itself, CM, and AM on a trajectory to Earth. After aerocapture, it will use the last of its fuel to circularize itself and CM into a low Earth orbit. One spare PM1 is stationed at L1.

Aeroshell Module (AM).

The Aeroshell Module protects the CM and PM1 from the intense heating loads generated during aerocapture. It meets the CM and PM1 at L1 during the crew's return

flight from the moon. The AM does not have a RS-72 main engine, only R-4D RCS engines. The module is a large domed cylinder with an open aft end (roughly 19 meters in length and 8.5 meters in diameter). A magnetic guide system captures the docked CM/PM1 spacecraft and draws it into the vehicle. The system then properly aligns the CM/PM1, correcting any angular or position errors. A magnetic docking system then takes over, securing the CM/PM1 to two APAS mounts inside the AM, holding the craft securely against the floor of the AM. The AM is propelled by PM1's engine from L1 to an Earth atmospheric entry corridor. Following aerocapture, CM/PM1 separate from the AM to perform a circularization burn and the AM is discarded. The heat shield uses existing TPS materials. Part of its heat shield is ablative (SIRCA) and the AM consequently cannot be reused. One spare is stationed at L1.

Ascent-Descent Vehicle (ADV).

The Ascent-Descent Vehicle is the LTV's version of the Apollo LM. It is a single stage, reusable spacecraft. It awaits the CM in polar lunar orbit and flies the crew to the lunar surface for their mission. After the surface mission, it flies the crew back up to orbit where it docks with the CM to return the crew to the CM. Once the LTV departs, it refuels from a FT and awaits its next mission. It remains in orbit instead of at a lunar base because it is more cost effective to deliver its fuel to lunar orbit instead of the lunar surface.

Propulsion Module 2 (PM2).

Propulsion Module 2 is a slightly modified Centaur upper stage, replacing the payload adapter with an APAS docking mount and two steel plates for use by the magnetic docking system. It uses the Centaur's existing RL-10 main engine and hydrazine attitude control thrusters, with no modifications to either. It is the workhorse

for getting LTV components away from Earth orbit. Everything leaving LEO is propelled by a PM2. PM2s are discarded after their burns and are not reused. It is important to note that the Centaur-PM2 must be human rated, but it should be noted that it is not being human rated to ride in the shuttle. PM2s will be delivered to orbit exclusively by Delta IV and Atlas V. However, PM2s will be used to propel the Crew Module (with the crew onboard) from LEO to L1, hence the need for a human rating. Another difficulty will involve accomplishing a rendezvous and docking to PM2 before its cryogenic propellants can boil off. The Delta IV and Atlas V are pushing their payload limitations to place a fully fueled PM2 in LEO, so any payload – the other LTV spacecraft to be pushed by PM2 – must be launched on a separate vehicle, forcing an in-space docking prior to the departure burn to head for L1. This means that these payload spacecraft must be launched prior to the PM2's launch and the PM2's launch vehicle must launch PM2 on course for a flight day one, preferably orbit one, rendezvous.

Fuel Tanker (FT).

The Fuel Tanker is the LTV's equivalent of the Russian Progress. It is responsible for refueling the CM, PM1, and ADV. Thus, depending on its particular target vehicle, its missions may carry it to LEO, L1, or lunar orbit. FTs sent to LEO can be recovered by the shuttle and reused if deemed cost effective. Those sent to L1 and lunar orbit are discarded following use.

PM2s will be used to deliver FTs to L1 and lunar orbit. An unfortunate consequence of this is that two FTs will be required to refuel the ADV prior to each lunar mission. However, it is possible that solar-electric propulsion might replace PM2 at some point for this purpose, or use of Weak Stability Boundary trajectories might allow

for use of lower performance propulsion from LEO. If so, it could significantly lower overall program launch costs and eliminate one FT and one to two PM2s from each mission. In an emergency situation, any FT is capable of docking to the CM and acting as a surrogate PM1.

3.10 LTV Communications Architecture

It may be desirable to avoid reliance on the Deep Space Network for communications as the network is already heavily taxed with requirements in support of NASA's numerous space probes. Consequently, a network of geostationary communications satellites should be deployed to support lunar communications, much like the existing Tracking and Data Relay Satellite System (TDRSS) supports communications between the ground and the shuttle and ISS.

In fact, the existing two-satellite TDRSS can be oriented to provide visibility to the lunar near side. (More than two satellites are in orbit, but the others serve as spares and are not part of the active system.) Oriented in such a manner, the system can provide near-continuous coverage, with daily outages of four to eight hours. Outages are due to gimbal limits on the single-access antennas and Earth occultation. However, by extending the gimbal limits, the problem could be reduced to only Earth occultation, which occurs roughly ten times per month with an outage of less than or equal to 70 minutes (Eckart, 1999). Of course, the existing TDRSS cannot be used, as it is continuously required to support ISS. A new network must be deployed.

The Boeing 601 and 702 spacecraft families (formerly Hughes) are easily capable of meeting this communications requirement. The Boeing 601 is already used as the NASA's TDRS and would have sufficient power to communicate with any of the LTV

spacecraft at any point in their mission trajectories. Given that the existing TDRSS will need replacement before Trailblazer is expected to begin, the replacement TDRSS could consider the needs of both LEO and lunar space programs. A future TDRSS (FTDRSS) could consist of two active Boeing 702 satellites in geostationary orbit with fully steerable antennas for lunar and translunar coverage, and additional steerable antennas for LEO coverage. The additional power supplied by the Boeing 702 makes it a better choice than the 601 due to the need to maintain a communications link with all deployed LTV spacecraft. Further, without the 601's gimbal limits, two satellites can provide full coverage. (Alternately, three satellites with gimbal limits could provide full coverage, but some negotiation may be required to obtain an additional geostationary orbit slot, phased between TDRS East and TDRS West.) These satellites would enable human spaceflight coverage throughout the near Earth environment. Two additional 702 satellites in halo or Lissajous orbits around the Earth-Moon L2 would enable coverage to the lunar far side, including the surface base. Two satellites are required, phased 180 degrees apart, because a single satellite cannot maintain continuous coverage of the poles (Eckart, 1999). One spare each would be required at GEO and L2. A total of six 702 satellites will be assumed for the FTDRSS constellation: two GEO active satellites with one spare, and two L2 active satellites with one spare.

As an aside, it should also be noted that because the mission architecture will always have one or more LTV spacecraft at L1, a lunar base would only need to have a communications system capable of reaching L1 or L2. LTV modules at L1 could serve as relay stations, transmitting communications from a surface base to Earth. Thus, an

indirect benefit of the LTV program is that the communications requirement for the surface base is greatly reduced.

3.11 LTV Flight Operations

The LTV is designed assuming a four-year lunar program consisting of two lunar missions per year. Each mission involves a 30-day stay in the vicinity of the lunar South Pole. Travel times for the crewmembers are approximately 14.5 days: 6.5 days outbound and 8 days inbound (including an assumed half-day loiter in LEO prior to lunar departure and a 2-day loiter in LEO following aerocapture). However, despite the fact that there are only 29 days per year with humans in the LTV, the LTV Mission Control will be operational 365 days a year.

Because LTV spacecraft are permanently in space (LEO, cislunar space, L1, and lunar orbit), Mission Control must provide continuous flight control to monitor their systems. Additionally, the logistical supply chain of pre-positioning LTV spacecraft is conducted primarily while astronauts are still on Earth, requiring significant planning and monitoring activities. Dynamic flight activities occur throughout the year, taking place while astronauts are onboard, while they are on the lunar surface, and before they leave Earth. More detail will be given to Mission Control operations in a later chapter.

The first lunar mission (including all launches of reusable LTV vehicles) is estimated to take 163 days for Earth launches, assuming a 20-day turnaround for Atlas V and Delta IV pads and exclusive access to Delta IV and Atlas V launch services during the mission. The lunar outbound flight begins on day 163, by which time some console positions are already making preparations for the launches associated with the second

lunar mission. Subsequent even numbered missions take 102 days for ELV launches and odd numbered missions take 83 days, with the same assumptions.

3.12 Trailblazer Missions

The previous section mentioned that the LTV is designed assuming a total of eight missions spread over four years. While the surface base and operations lie beyond the scope of this dissertation, it is worth making brief mention of the primary objectives of each mission to indicate how the eight missions fit in to the Trailblazer mission statement and objectives described in Chapter One.

Trailblazer 1: Infrastructure Development Mission 1

An ongoing objective will be to assess the impact of lunar gravity on human health and performance. Studies will be conducted both inside pressurized structures and on surface EVAs. In addition to determining biological impacts of low gravity, human factors considerations for locomotion, posture, balance, and other anticipated activities will be researched. This mission will also survey and appraise existing surface terrain features in the immediate area for lunar surface base development and expansion. This will include surveys both for future Trailblazer missions as well as for follow-on commercial, government, or private lunar activities. Astronauts will begin to construct landing sites for use by cargo and personnel transfer vehicles. As another ongoing program, they will continuously evaluate the effectiveness of lunar base equipment and operational techniques. Mission success and responses to failures will increase competence in planetary surface operations.

Trailblazer 2: Infrastructure Development Mission 2

The second 30-day mission will continue to assess the impact of lunar gravity on human health and performance. They will also continue to survey and appraise existing

surface terrain features for lunar surface base development and expansion. As a new activity, they will construct surface roads for use in lunar base construction and operations. Astronauts will excavate trenches as necessary for the expansion of lunar base facilities and continue to construct landing sites for use by cargo and personnel transfer vehicles. As an important step to future expansion in space, they will begin to establish a surface infrastructure capable of supporting Mars related testbed activities (landing sites, available power, monitoring facilities, etc.). It should be noted that even if a decision to pursue human expeditions to Mars does not materialize, this infrastructure can still be used for any of a number of commercial, private, or governmental lunar activities. Like the first mission, they will continue to evaluate the effectiveness of lunar base equipment and operational techniques and increase US competence in planetary surface operations

Trailblazer 3: Infrastructure Development Mission 3

As with all Trailblazer missions, the crew of Trailblazer 3 will assess the impact of lunar gravity on human health and performance. They will continue to excavate trenches as necessary for the expansion of lunar base facilities. Trailblazer 3 astronauts will complete the construction of landing sites for use by cargo and personnel transfer vehicles. This mission will complete the formal program to evaluate the effectiveness of lunar base equipment and operational techniques. In preparation for Trailblazer 4, the astronauts will begin to locate and survey potential lunar fuel resources. They will also complete development of surface infrastructure for support of Mars related testbed activities. The process of accomplishing Trailblazer 3 objectives will continue to increase competence in planetary surface operations

Trailblazer 4: Fuel Prospecting Mission 1

Trailblazer 4 marks the first mission to actually utilize lunar resources. A new slate of activities will expand their ability to assess the impact of lunar gravity on human health and performance, this time in a mining environment. They will complete the surveying and appraisal of existing surface terrain features for lunar fuel mining and processing operations. Based on their results, they will then locate and survey potential lunar fuel resources. This will include both polar ice/hydrogen resources and lunar soil resources (In recent years, lunar ice has dominated most discussion of lunar fuel, but a variety of fuels and oxidizers can be extracted from lunar soil.). They will then construct surface roads for use in lunar mining operations. The crew will subsequently begin to mine and process lunar fuels to prototype possibilities for use in support of future space activities. With the first mining of extraterrestrial fuel, Trailblazer 4 will begin to develop a critically important competency in planetary surface operations

Trailblazer 5: Fuel Prospecting Mission 2

Trailblazer 5 will be entirely dominated by fuel mining and processing activities. The assessment of impacts of lunar gravity on human health and performance will be related almost entirely to mining operations. Trailblazer 5 astronauts will continue to mine and process lunar fuels and will return raw and processed fuel samples to earth for detailed analysis. Results of Trailblazer 5 will be critical in establishing competence in planetary surface mining operations and will be vital for future in-situ resource development of the moon, Mars, and all other extraterrestrial bodies.

Trailblazer 6: Fuel Prospecting Mission 3

The final mission with a fuel-specific focus, Trailblazer 6 will wrap up the mining and production of lunar fuels to prototype possibilities for use in support of future space

activities. Like Trailblazer 5, samples of these fuels will be returned to Earth for detailed analysis. In preparation for Trailblazer 7, the crew will survey the lunar surface for future government and commercial applications. This will include the gamut of potential future lunar activities. As with all missions, Trailblazer 6 will continue to assess the impact of lunar gravity on human health and performance and increase competence in planetary surface operations.

Trailblazer 7: Commercial Opportunities Mission 1

The last two lunar missions focus specifically on identifying ways for American industries to profitably exploit opportunities and resources on the moon. Trailblazer 7 will continue to assess the impact of lunar gravity on human health and performance. The mission will also begin to develop safety guidelines for commercial and private human operations on moon. Astronauts will continue to survey the nearby lunar surface for future government and commercial applications. This mission will not only increase competence in engineering and scheduling aspects of planetary surface operations, but will also begin to develop competence and confidence with lunar business models.

Trailblazer 8: Commercial Opportunities Mission 2

Trailblazer 8 completes the task of assessing the impact of lunar gravity on human health and performance. This mission will also complete the development of safety guidelines for commercial and private human operations on moon and will conduct a final survey of the lunar surface for future government and commercial applications. The conclusion of the Trailblazer program will leave the United States with demonstrated competence in planetary surface operations and will present a roadmap to the American government and US business for future opportunities for lunar exploration in line with national interests.

Chapter Four – LTV Crew Module

4.1 Overview

CM-ADV Rendezvous Location

The decision to carry the CM all the way to lunar orbit was the result of a trade. Only two vehicles in the LTV are capable of carrying crew: the CM and the ADV. Regardless of other considerations, the CM must travel at least as far as L1. If the ADV is called upon to travel to L1 to take on crew (instead of in LLO), then it incurs a nominal two-day life support requirement with a contingency five-day requirement (two days from L1 to LLO, plus one day in orbit, plus two days returning from LLO to L1 (In the event of any landing site problem, the ADV would need to be able to abort back to L1 without landing to take on new provisions). However, if the ADV is limited to ascent and descent, it only incurs a nominal three to four-hour life support requirement with a thirty-two-hour contingency requirement. This results in a tremendous difference in crew accommodations and life support equipment required onboard the ADV, translating into significant weight savings for the lunar lander. As will be seen in chapter six, it also allows for significant structural weight savings on the ADV. Alternately, if the CM were to stop at L1, then it would only need to accommodate an eight-day life support requirement, as opposed to a fourteen and a half-day requirement. Orbital mechanics dictate that savings to the vehicle destined for the lunar surface are more important than savings to a vehicle destined only for lunar orbit. It is also significant that this LTV is intended to service a polar landing site. For a site near the equator or poles, orbital rendezvous is not a significant concern. However, for sites at middle latitudes, orbital

rendezvous becomes a serious problem that would drive rendezvous locations away from lunar orbit and to an Earth-Moon Lagrange point.

CM Vehicle Selection

An important step is the design of a crew module to carry the crew during the lunar transfer. A variety of options are possible: a space station derived module, a Spacelab module, a Spacehab module, a TransHab-style inflatable, an X-38, an Apollo capsule, a Gemini capsule, and a uniquely designed module with no design heritage. Clearly, the last choice violates the constraint to use existing vehicles as much as possible and is not considered as a Trailblazer option.

The other choices can be divided into two categories: those capable of Earth entry and those that are not. Those not capable of Earth entry have an inherent risk. The shuttle or ISS must be capable of receiving their astronauts following a lunar mission or the crew will be lost.

Currently, the station is not capable of receiving lunar astronauts who arrive in spaceships incapable of Earth entry. Flight rules require that the station be able to evacuate all personnel onboard in the event of a failure that renders the station uninhabitable. The Soyuz capsule docked to the Russian segment currently provides this function. However, the Soyuz can only carry a crew of three, which is the size of the station crew. Unless the station adds additional lifeboats, which is highly unlikely, it cannot be used. Therefore, only the shuttle can currently receive an inbound lunar crew if the LTV itself cannot reenter and land (if the LTV can land, then a lunar crew could currently visit the station, because the LTV is in essence an escape vehicle).

The risk of shuttle unavailability is obvious. The shuttle fleet has been grounded several times in its history while various problems with the shuttles were resolved. If the fleet were to be grounded while a crew was on the moon, the crew could potentially die if shuttle flights did not resume in time. Even if the shuttles are not grounded, launch delays could cause a shuttle to miss its rendezvous with a LTV. Kennedy Space Center is particularly vulnerable to weather-related delays during the winter and during hurricane season. The hurricane threat is also present for Johnson Space Center and the year 2002 marks the first time in which a hurricane forced a shuttle launch delay because it threatened Mission Control at Johnson Space Center. Additionally, numerous in-flight shuttle emergencies are possible that could cause the shuttle crew to deorbit and land before receiving an incoming lunar crew. The risk of such an emergency is greater during a long duration shuttle mission, which is the type of mission that would be required for LTV end of mission support. The shuttle is far too complex and uncertain a system to place crew survival on the assumption of a shuttle being available "on demand." Regardless of whether the intent is to place a shuttle in orbit before the crew departs at the beginning of a lunar mission (and keep it there until the LTV returns to LEO at the end of a lunar expedition) or to time a shuttle launch to have the shuttle in orbit by the time the crew returns, a variety of factors can cause the shuttle to not be available precisely when the lunar crew's survival depends on it being there.

Consequently, the crew module must be capable of entering the atmosphere and landing its crew safely on Earth. This leaves Gemini, Apollo, and X-38 as options. Gemini is an extremely small cabin and does not leave much room for astronauts to move around. Gemini's docking port is also incompatible with modern docking hardware and

any possible modifications still would not allow astronauts to transfer from the CM to the ADV without conducting an EVA. Because the Gemini cabin is too small for crew to put on or take off a spacesuit, this would mean that the astronauts would have to remain in spacesuits for the entire trip. From a human factors perspective, this is an unacceptable living environment. Gemini is not an option.

While Apollo is larger and could be modified to support modern docking systems, it is not a preferred solution because it is restricted to a water landing. This requires deployment of ground personnel to a landing site and introduces additional risks and failure modes associated with the ocean (e.g. the sinking of the Mercury capsule Liberty Bell 7). The industrial and engineering infrastructure necessary to support Apollo production also no longer exists, making it essentially a new vehicle and arguably violating the constraint to use existing vehicles when possible.

Alternately, the X-38 lands on dry land and is capable of precision landings anywhere in the world. It does not need ground personnel dispatched to some remote location – it can land at existing facilities at Kennedy Space Center, Edwards Air Force Base, or virtually any government controlled airfield. Based on casual claims made by X-38 engineers about its precision-landing abilities, it could possibly land in a large parking lot or open field at Johnson Space Center. A greater advantage to the X-38 (over Apollo and Gemini) is that its atmospheric flight software is modern and compatible with existing avionics systems. It also has an existing engineering support base, unlike Apollo and Gemini. Engineers would not have to spend a significant period of time discovering or relearning vehicle capabilities, systems and attributes. It could further allow for a

more efficient use of budgetary resources, employing commonality between both station CRV efforts and Trailblazer LTV efforts.

Consequently, the X-38, shown in figure 4-1, will serve as the LTV Crew Module, with the necessary modifications to transform the X-38 from an ISS Crew Return Vehicle into a fully reusable lunar transfer spacecraft. While the X-38 was designed with the intent that it be easily applied to other space applications beyond its crew return mission, it will require significant modifications to convert it to a spacecraft capable of transporting two astronauts from LEO to LLO and back. Some systems, such as the thermal protection system (TPS), landing gear, Parafoil, vehicle structure, and pressure shell will remain unchanged. Most other systems will require some alteration and will be presented in the remainder of this chapter. The X-38 has dimensions of 9.14 m in length, 4.42 m in width, and 3.20 m in height.

4.2 Life Support

Atmosphere Management

Several options are available to provide oxygen to the crew: stored oxygen, Oxygen Generation Assembly (OGA), or Sabatier processes. These options can be examined to determine the most appropriate solution.

The simplest and most widely used process for oxygen supply is simple oxygen storage. This provides an open loop system that is best for short missions. Oxygen can be stored in high pressure or cryogenic tanks (Larson and Pranke, 1999).

Larson and Pranke (1999) suggest a mass parametric of 1 kg per person per day multiplied by a packaging factor of 1.9 and a volume parametric of 0.0033 m^3/kg to size a stored oxygen system. There are no power requirements. It operates at ambient

temperature and does not generate waste heat. It is, however, a high-pressure system, operating at 25.3 MPa.

The Russian Mir space station uses an Oxygen Generation Assembly (OGA) to perform electrolysis on excess water produced by fuel cells. The International Space Station (ISS) will later gain this capability (Larson and Pranke, 1999).

Larson and Pranke (1999) suggest 35 kg per person as a mass parametric for OGA, a volume parametric of 0.03 m^3 per person, a power requirement of 0.35 kW per person, and a heat generation of 0.1 kW per person. It operates at ambient temperature and pressure.

The Sabatier process recovers carbon dioxide and uses a two-step process to first react the carbon dioxide with hydrogen, producing methane and water. Water electrolysis is then used to produce oxygen. The methane can either be decomposed to reclaim hydrogen, or it can be used by the propulsion system (Larson and Pranke, 1999).

Larson and Pranke (1999) suggest parametrics of 38 kg per person, 0.07 m^3 per person, 0.02 kW per person for power, and 0.16 kW per person heat generation. It operates at 473-673 K and is not restricted to any particular operating pressure.

For this mission, stored oxygen is more efficient than Sabatier or OGA. The key driver is mission duration. For the short duration mission of the LTV (14.5 days), the mass, volume and power requirements of the Sabatier and OGA equipment outweigh the benefit of recycling oxygen. Roughly 2 kg of oxygen and 5 kg of nitrogen are assumed to be lost due to a habitat atmosphere leakage rate of 0.5 kg per day (Larson and Pranke, 1999). Taking this loss into account, 59 kg are required for the stored oxygen system, occupying a volume of 0.195 m^3. Power requirements are negligible. By comparison,

the OGA system requires 70 kg, 0.06 m^3, 0.7 kW and generates 0.2 kW in heat. The Sabatier system requires 76 kg, 0.14 m^3, 0.04 kW and generates 0.32 kW in heat.

An additional 10 kg and 0.03 m^3 are required for stored nitrogen. Another 64 kg of life support consumables are required to support four EVAs per crewmember, based on Larson and Pranke's (1999) recommendation of 8 kg per crewmember per EVA. This frequency of EVAs assumes one emergency EVA for crew transfer in the event of docking system failure and three contingency in-flight-maintenance (IFM) EVAs.

In addition to providing oxygen, the life support system must also remove carbon dioxide from the air. Virtually all crewed spacecraft have used Lithium hydroxide (LiOH) canisters to absorb carbon dioxide (CO_2). The technology is mature and LiOH canisters are highly reliable, small, and use low power. Because it is a non-regenerative process, the mass can become prohibitive for long duration missions (Larson and Pranke, 1999).

Larson and Pranke (1999) indicate that a standard LiOH cartridge has a mass of 7 kg and can provide CO_2 management for four persons for one day. Simple scaling yields a mass parametric of 7 kg per 4-persons per day. Larson and Pranke (1999) suggest a volume parametric of 0.005 m^3 per cartridge. A miniscule power requirement of 12 W is needed to drive a fan to circulate air across the cartridge. Heat generation is negligible and it operates at ambient temperature and pressure.

As an alternative system to LiOH, Four Bed Molecular Sieves (4BMS) are used on Skylab and ISS. 4BMS uses synthetic zeolites or alumino-silicate metal ions to collect CO_2 (Larson and Pranke, 1999).

Again using Larson and Pranke's (1999) parametrics, 30 kg per person is required for 4BMS, with a volume requirement of 0.15 m^3 per person, a 0.3 kW per person power requirement, and a 0.3 kW per person heat generation. It operates at ambient temperature at a pressure of 680 kPa.

Just as with the oxygen supply, mission duration is the critical driver for CO_2 removal. Mass, volume and power requirements are significantly lower for LiOH than for 4BMS at the LTV's mission duration. The LiOH system has a mass of 51 kg, occupies 0.036 m^3 and draws 0.012 kW power. This compares to 4MBS requirements of 60 kg, 0.3 m^3, 0.6 kW power, and 0.6 kW heat generated. Consequently, LiOH will be used.

Cabin Pressure

Cabin pressure is driven primarily by EVA considerations. Unfortunately, the optimization of cabin pressure is contradictory to the optimization of spacesuit pressure (Eckart, 1996). It is preferred for the cabin pressure to be at least one atmosphere (101.3 kPa) because at lower pressures, the oxygen concentration must be increased, therefore increasing the flammability potential (Eckart, 1996). It was a pure oxygen environment that played a significant role in the fatal Apollo 1 fire. However, the space suit pressure should be as low as possible in order to provide the astronaut with increased mobility and to maximize dexterity and tactility of the glove (Eckart, 1996). Generally, this means the cabin and spacesuit will operate at different pressures.

Due to the pressure differential, astronauts must prebreathe oxygen before an EVA. The oxygen prebreathe, or denitrogenation, reduces the nitrogen content in the body and prevents occurrences of incapacitating decompression sickness and bends

(Eckart, 1996). From an operational perspective, it is desirable to keep the prebreathing time to a minimum as this affects the response time to an emergency situation and it limits crew activities during prebreathe

The spacecraft atmospheric composition and initial and final pressure levels govern the duration of prebreathing. An important safety measure is the R-factor, which is a ratio of tissue nitrogen pressure (i.e. cabin atmosphere N_2 partial pressure) prior to decompression and the final suit pressure. The lower the R-factor, the lower the risk for the crew to experience decompression problems. The United States, Russia, and Europe use or plan different approaches and R-factors, with the United States using an R-factor of 1.4, Russia using 1.7, and Europe planning to use 1.2 (Eckart, 1996). R-factor can be calculated by the equation $R=P_{N2i}/P_{ss}$, where P_{N2i} is the initial cabin atmosphere N_2 partial pressure and P_{ss} is the spacesuit pressure (Eckart, 1996). Dependent on cabin pressure and suit pressure selected, prebreathe times of zero can be achieved with R-factors of 1.22 and 1.4.

Several other constraints play important roles in determining the cabin atmosphere. Current standards suggest that the oxygen partial pressure should not fall below 16 kPa to reduce the risk of hypoxia (Larson and Pranke, 1999). However, the concern of hyperoxia and O_2 toxicity suggests that the oxygen partial pressure should not exceed 21-22 kPa for long periods (Larson and Pranke, 1999). Additionally, to reduce fire dangers, the oxygen partial pressure should not exceed 24% of the total pressure, or up to 30% under controlled conditions (Larson and Pranke, 1999). Figure 4-2 shows the relationship between suit pressure, cabin pressure, and R-factor.

The LTV will maintain a cabin atmosphere of 68-kPa with 28% oxygen, 72% nitrogen content. Assuming an EVA suit pressure of 35 kPa using pure oxygen, this will result in an R-factor of 1.4 and will not require any prebreathe time. (Other than the specification of suit pressure, details of the EVA suit design are beyond the scope of this dissertation. Where mass and volume data is required, shuttle extravehicular mobility unit [EMU] suits will be used as representative data.).

Water Supply

The water supply will use a partially closed system. Multifiltration (Larson and Pranke, 1999; Eckart, 1996) is a relatively simple and mature technology that will be used to recycle hand wash, dishwashing, and urine flush water. Drinking and food preparation water will not be recycled. Additionally, due to purity concerns, the urine flush water will be recycled in a separate loop from hand wash and dishwashing water.

The recycled water will use a source stock that is sized equivalent to 2.1-day supply. This quantity of water is selected to allow a sufficient amount of water to be onboard the vehicle to serve as a radiation shield. Details of the shield will be discussed later in this chapter. A recovery rate of 85% is assumed. A total of 148 kg will be carried onboard the crew module in three tanks: a potable water tank, multifiltration tank 1 (hand wash and dish wash), and multifiltration tank 2 (urine flush). Multifiltration tank 1 will hold 76 kg, multifiltration tank 2 will hold 4 kg, and the potable water tank will hold 68 kg (EVA water will not be stored in this stock, but will be located with EMU storage.). Because multifiltration tank 1 is used for washing, it will be a hot water source. The ideal maximum, safe temperature for hot tap water is 50°C (Medialaunch, 1999) so

the tank will be maintained at this temperature. Table 4-1 indicates the quantities of water required for various crew services.

The entire mass of the system, including all tanks and filters, is 265 kg. This includes mass parametrics of 10 kg per person for each multifiltration unit's mass (Larson and Pranke, 1999). Tank masses are sized by the mass parametric of (Water mass)*(1/0.89-1) (Larson and Pranke, 1999). A total of 0.16 kW are required to operate the two multifiltration units, based on the sizing parametric of 0.04 kW per person per unit (Larson and Pranke, 1999).

Radiation Protection

Despite the short mission duration for LTV crew, the LTV must provide some degree of radiation protection due to the unpredictability of solar particle events. Due to mass considerations, the primary radiation shielding is located on PM1 and consequently, radiation protection will be covered in greater detail in chapter five. However, because CM operates for approximately three to four days prior to docking, an emergency level of protection must be provided onboard the CM.

An emergency water protection shield exists on the CM, using the crew's water supply as a shield. The water tanks have a square cross section, measuring 0.62 meters on each side. These dimensions represent the necessary size to protect two 95th percentile adult males, with the two males back to back and the shield directly "overhead" or "underneath," depending on the orientation of the astronauts with respect to the shield, which is positioned between the astronauts and the incoming radiation (NASA-STD-3000/T, 1995). The amount of water carried onboard is sized to allow the tanks to provide a combined depth of 0.39 meters, given the previously mentioned dimensions.

This results in a shield that is essentially as capable as the PM1 shield, though it covers a much smaller area. It is, of course, only capable of providing protection in one direction. For a short duration mission such as lunar transfer, this is acceptable. In such a mission, the total Galactic Cosmic Radiation exposure (the primary omni directional source) is within acceptable limits and the primary threat is solar particle events, which comes only from the sun.

In order to be protected by this shield, the crew must position themselves, back to back, directly in front of the water tanks. To accomplish this, the sleep restraints will be mounted perpendicular to the water tank and spacecraft floor, such that each astronaut is lying on their side (relative to the spacecraft floor) with their backs to each other, one facing the starboard wall and the other the port wall, their heads pointed towards the spacecraft nose and their feet resting against the water tanks. (Alternately, they could reverse direction such that their heads are against the water tanks.) The CM will be oriented such that its aft is facing the radiation.

The crew will use the same radiation protocols whether the CM is attached to PM1 or not. The only difference is that when CM and PM1 are joined, the crew will have roughly twice the level of radiation protection as when CM is alone.

4.3 Crew Accommodations

Crew accommodations are a necessary, though often inadequately considered, element of all crewed spacecraft. Failure to properly consider all aspects of crew accommodations early in the design process can result in costly redesigns, performance limitations, and reduced safety for the flight crew. Proper human factors principles must

be reflected in the cabin layout and systems, operational procedures, and crew, vehicle, and MCC interfaces.

For purposes of this dissertation, crew accommodations are considered to be the elements of mission hardware and procedures that most directly serve human needs. This includes the food system, sleep provisions and/or crew quarters, personal hygiene and toilet, clothing system, crew health care, emergency provisions, recreation hardware, maintenance, housekeeping and trash, photographic equipment, and restraints and mobility aids (Larson and Pranke, 1999). These accommodations serve to both house the crew and ensure crew health and safety.

The LTV must provide all necessary accommodations and systems to support a human crew of two for 14.5 days while they are in transit between Earth and lunar orbits. This assumes a half day in LEO before trans-L1 burn, three days en route to L1, a half day at L1, two days in transit to LLO, a half day in LLO before crew transfer to the lunar surface, a half day in LLO following crew transfer from the lunar surface, two days en route to L1, a half day at L1, three days in transit to Earth, and two days in LEO following aerocapture.

The Spacecraft Cabin Design Expert System (SCDEX), a software expert system developed as part of the author's master's thesis, was used to perform a function and task analysis and develop resource requirements for the LTV crew accommodations. SCDEX applies heuristic rules to analyze user specified crew functions and determine specific crew workstations to include in the spacecraft (Robert Howard, Jr., 1997). The SCDEX analysis indicates the following seven workstations or provisions will be required in the

Crew Module: Vehicle systems, Housekeeping, Galley, Science, Exercise, Hygiene, and Crew sleep.

With the workstations determined, SCDEX then determines spacecraft cabin components based on a user supplied mission description. It utilizes a database containing spacecraft crew components used in the shuttle, station and X-38 programs to generate a list of appropriate items (Robert Howard, Jr., 1997). SCDEX does not indicate component power requirements or masses, but does list dimensions. It applies heuristic rules to user queries concerning mission duration, crew size, and operating environment. Human factors principles are applied to match potential equipment items to mission parameters. SCDEX selected components are modeled volumetrically as blocks. The exact dimensions and masses may vary to some extent in actual flight hardware, but SCDEX estimates should be adequate for preliminary design work.

As part of the process of generating equipment dimensions, SCDEX applies anthropometrics data, assuming crew will vary in size within extremes of 5th percentile Japanese female to 95th percentile American male. For certain items, such as sleep restraints, it will add the appropriate human dimensions to the item to define the total space required in the vehicle for the item and its human operator (Robert Howard, Jr., 1997). Table 4-2 lists crew accommodations by major category.

Additionally, the LTV will need to transport some items that are not used during the transfer but will be required on the moon, so some cargo space is also required. This will include the astronauts' space suits for use on the lunar surface. In a contingency situation, the crew can conduct EVAs from the Crew Module, but a nominal mission will not involve any EVA activity. The astronauts will don their space suits prior to transfer

to the ADV and consequently will need to bring two EMUs with them. (Technically, this is not an EVA because they do not enter the vacuum of space until they touch down on the lunar surface and egress from the ADV.) A small allocation will also be made for lunar samples, but Trailblazer does not assume that extensive samples will be returned to Earth with the crew. Any large-scale sample return would utilize a dedicated cargo vehicle flying a low thrust or other low energy transfer.

The X-38 is a relatively small spacecraft, which presents challenges in providing sufficient internal volume for two astronauts and their associated systems. This forces some compromises to the solutions identified by SCDEX. The LTV will use wall mounted sleep restraints (essentially a stretcher with a sleeping bag attached) similar to those used on the shuttle instead of larger sleep bunks recommended by SCDEX. The restraints will be mounted between the oven and water dispenser, arranged along the vehicle's yz plane. Alternately, with the rower, seating, and flight controls folded out of the way, the sleep restraints could be located in the area occupied by those items. This area can also be used for donning and doffing EMUs in preparation for transit to the ADV. Additionally, there is no room for the EMUs as described in the table, which assumed the EMUs would be stored in a fully uncompressed fashion. The forward section of the cabin will be allocated to the suits, but they will have to be compressed significantly to fit within the available volume. Figure 4-3 shows an approximate configuration of the CM pressurized volume, indicating a plan view layout of crew accommodations equipment. Components are not modeled to scale.

Medical items must also be included in the CM cabin. Tamara Howard, M.D., Ph.D., physician and professor at Mt. Sinai University Hospital, notes (2002) that "the

environment away from earth may cause a human to experience a variety of physical stresses, resulting in disease or organ dysfunction...crashes, explosions, and other accidents may occur during the course of space flight. The care provided during the first hour after a severe traumatic injury occurs greatly influences whether the victim lives or dies. Numerous non-life threatening injuries may also occur."

It is consequently desirable to anticipate potential medical needs and equip the CM with appropriate medical provisions so those needs may be addressed (Tamara Howard, 2002). Dr. Howard (2002) suggests that specific emergencies that may arise and which the astronauts can be trained to respond to include: hypoglycemia (level of blood glucose drops low enough to put the person at risk for brain damage), seizures, respiratory distress, cardiac arrest, traumatic injury (anything from minor to life threatening), anaphylaxis (life threatening allergic reaction), and dehydration.

In order to provide appropriate medical care, Dr. Howard (2002) recommends there should be a medical kit onboard the CM containing:

- Automatic external defibrillator (device to shock the heart to help it re-start a normal rhythm in persons who develop an arrhythmia called ventricular fibrillation)
- Drugs used in basic cardiac resuscitation (to help stabilize the person if the heart is beating too fast, too slow, or not at all)
- Ambu bag, oxygen, and intubation equipment (used to help protect the airway and deliver oxygen to the lungs of a patient who has stopped breathing)
- Splints and ace wrap (for use in case of sprains or fractures)
- Medications for treatment to anaphylaxis (it is well known that persons can develop an allergy to a given substance at any age during their lifetime, and sometimes the allergic reaction can be life threatening)
- Normal saline bags (fluid given intravenously to persons who are dehydrated, who are bleeding heavily, or [in some cases] who are in shock)
- Ativan (used to treat seizures [which can develop in many situations, including after a serious head injury, and also in persons who develop certain blood chemistry abnormalities]; also used to sedate a person who develops a psychiatric emergency while aboard the CM)
- Glucagon (is injected into a person whose blood sugar has dropped dangerously low, raising the blood sugar level)
- Tubes to collect blood and urine specimens, and machines to analyze the specimens

The medical supplies will be located in storage lockers onboard the CM.

4.4 Avionics

GPS

The CM will use two GPS units (a prime and a backup unit) for position, attitude and velocity information while in LEO. The space integrated GPS/INS (SIGI) has been developed for use on the shuttle, station and CRV programs and will also be used on the CM. The SIGI contains a GPS receiver, ring laser gyros, and force rebalance accelerometers. It is capable of pure inertial, GPS-only, and blended GPS/INS navigation solutions. The SIGI masses 9.53 kg and draws 45 W (SIGI, 2000).

The SIGI is capable of operating at altitudes up to 1111 km. It can process the following maximums: angular rate ± 57 deg./s, linear velocity ± 12 km/s, angular acceleration ± 171 deg/s^2, linear acceleration ± 98 m/s^2, and jerk ± 200 m/s^3. Under GPS or GPS/INS blended performance it can achieve a position accuracy of better than 50 m and a velocity accuracy of better than 0.3 m/s (SIGI, 2000).

This indicates that the SIGI will be useful for navigation purposes while in LEO, and while it is 50 meters or greater from other spacecraft. Beyond LEO, the INS portion of the SIGI will still be useful, though it will require periodic updating from the Star Sensors or other navigation sensors.

Star Sensors

The CM is equipped with two star sensors to provide fully autonomous attitude determination. The flight-proven Ball Aerospace CT-633 has attitude accuracy better than 6 arc-sec and will be used on the CM (CT-63X Star Sensor, 2002). The CT-63X series of star sensors has been used on NEAR, ACE, SOAR, Coriolis, GALEX, TRIANA

and Deep Impact. Each has a mass of 2.4 kg and draws only 9 watts power. Figure 4-4 shows a typical CT-63X sensor.

Sun Sensors

Sun sensors are embedded in the solar array masts and are used to track the position of the sun, enabling the arrays to position themselves to face the sun. Six additional sun sensors will be located on the CM surface. These CM sun sensors will be SSTL 2-axis sun sensors or equivalent units (Surrey, 2002). Each sensor has a ± 50-degree field of view and a 0.5-degree accuracy. The mass is only 0.3 kg and the sensor requires only 100 mW (Surrey, 2002). It is important for the CM to also have sun sensors (not just on the arrays) because the vehicle can use this data to help establish its position when it is not in LEO. By determining the direction of the sun, Earth, and moon, the CM can determine where it is along a cislunar trajectory. Sensors on the solar arrays cannot be used effectively for this purpose because of errors introduced due to flexing in the array mast.

Horizon Sensors

Two Mini-Dual Earth Sensors (MiDES) horizon sensors (primary and backup) are mounted on the CM (Mini-Dual Earth Sensor, 2002). The MiDES has two arrays, configured 90 degrees apart, that locate the horizon of the planet or moon it is orbiting.

When the CM is in lunar or Earth orbit, these horizon sensors can help the CM determine its attitude with respect to the surface and can correct any errors that have developed in the SIGI's INS. When star sensor data is available in orbit, horizon sensors can serve as a backup to the star sensors. Additionally, while in cislunar transit, the horizon sensors may be able to assist the star sensors and sun sensors in locating Earth and the moon.

The MiDES masses 1.4 kg and requires 800 mW (Mini-Dual Earth Sensor, 2002). Figure 4-5 shows a sample MiDES and Figure 4-6 illustrates MiDES in operation.

Laser Rangefinders

To assist in the docking process, each of the two docking ports is equipped with three laser rangefinders. Each laser has a range of 150 meters, weighs 4.5 kg and draws 17.5 W power (Laser Mapping, 2002). Their data is processed by the CM's onboard computers, enabling the spacecraft to develop a three-dimensional image of any surface in proximity to its docking port.

Air Data System

The air data system is used during entry at speeds below Mach 3 to provide information on the movement of the spacecraft through the atmosphere. Their data is computed to provide the navigation system with angle of attack, mach number, equivalent airspeed, true airspeed, dynamic pressure, barometric altitude, and altitude rate (Air Data System, 2002).

A flush air data system (FADS) is currently being developed at NASA's Dryden Flight Research Center in support of the X-33, X-34, X-38 and HYPER-X projects. Over 78 test flights have been conducted with FADS. Advantages of FADS over deployed probes are that it eliminates the need for intrusive probes, improves air data measurement robustness, and eliminates probe vibration and alignment errors (FADS, 2001). The Crew Module will assume the use of FADS for air data.

Vehicle Autonomy

Crew Module avionics will benefit extensively from New Millennium Program missions such as Deep Space One. These missions were intended to demonstrate new

technologies in space so that they assume the risk of first use, allowing future space missions to benefit from their breakthroughs (Remote Agent FAQ, 2002).

A key technology that will be applied to the Crew Module is AutoNav, which was successfully pioneered aboard JPL's Deep Space One mission. Once a week during Deep Space One's primary mission, AutoNav was invoked by the operating sequence to allow it to acquire optical navigation images. It turned the spacecraft and the integrated camera and imaging spectrometer to take pictures of asteroids and stars, analyzing them to determine its location. AutoNav used the position of an asteroid relative to the stars to calculate where it was in the solar system. It then issued appropriate commands to the power and propulsion systems to activate its ion engine for the trajectory it determined should be pursued (Autonomous Navigation, 2002).

Figure 4-7 illustrates the application of Autonomous Navigation to Deep Space One's mission. Of particular interest to this dissertation is the Optical Departure segment, where AutoNav uses images of Earth and the moon to determine its position. The Crew Module and other LTV spacecraft will require an enhanced variation of the AutoNav used during Deep Space One's Optical Departure. The CM AutoNav will use a combination of optical navigation, TDRSS data links, laser rangefinder data, ring laser IMU data, GPS, differential GPS, and relative GPS to determine the vehicle's position, attitude, velocity, acceleration, and attitude rates and accelerations.

Of equal importance is the Remote Agent fielded aboard Deep Space One. It is an artificial intelligence computer software system that introduced significant autonomy to the vehicle, enabling the spacecraft to make a wider variety of decision for itself than previous spacecraft were able to do. Rather than giving detailed instructions to a

spacecraft, ground controllers were able to give only general direction, assigning general tasks (Remote Agent, 2002).

The Remote Agent incorporates modern computer reasoning capabilities, including model-based reasoning algorithms, constraint-based, goal-directed planning and execution algorithms, and a fail-operational fault-protection approach (Remote Agent, 2002).

A "planner/scheduler" generates a set of time-based and event-based activities, known as "tokens." These tokens are delivered to an "executive," which is also part of the software system. The executive makes decisions by taking into account knowledge of the spacecraft's state or health, constraints on spacecraft operations, and the plan provided by the planner/scheduler. The executive expands the tokens into a sequence of commands that are issued directly to the appropriate subsystems on the spacecraft. The executive then monitors responses to these commands, and reissues or modifies them if the response is not what is intended (Remote Agent, 2002).

This response is implemented in part with Mode Identification and Recovery (MIR), another Deep Space One artificial intelligence system. MIR uses a series of vehicle models to detect failures, analyze to determine their cause, and recover from their effects (MIR, 2001).

Not only does this improve the efficiency of spacecraft operations, but it also allows a spacecraft to respond to unexpected situations/problems. Remote Agent and MIR-derived programs will allow the CM to function with significantly less direct oversight from Mission Control.

Flight Computer

Prior to the 1990s, most spacecraft avionics – including flight computers – were driven by the "function-at-any-cost, melt-before-fail" design philosophy (Stakem, 2001). As a result, spacecraft computers tended to be archaic by any terrestrial comparison. In 1990, the space shuttle General Purpose Computer (GPC) was roughly equivalent to a Commodore 64 in computing power. Even with upgrades since that time, it still has not joined the ranks of pre-Windows 80286 class machines (Modern laptops are routinely carried aboard the shuttle, but they do not perform flight control functions.).

In the 1990s, a drive towards the use of commercial (COTS) products became the mantra of the day. While this has not enabled an upgrade of the shuttle (due to the expense of rewriting flight software and the risk of potentially introducing catastrophic errors) it has featured in the design of new spacecraft, including the International Space Station and Crew Return Vehicle. Unmanned spacecraft have utilized a variety of semi-modern processors, such as the RAD6000, RH32, and the MIPS-derived Mongoose V (Stakem, 2001).

Unfortunately, it is not wise to simply take a computer from a local dealer and fly it in space. Like humans, computers are particularly vulnerable to radiation. This vulnerability falls into two categories: damage caused by cumulative dose and damage caused by transient energetic particles (i.e. during solar flare activity). Absorbed radiation can cause temporary or permanent changes in the material. Leakage current can increase, bit states can change, devices can exhibit unforeseen operation, and device latchup or burnout can occur (Stakem, 2001). Consequently, radiation hardening of processors, or at least implementation of error-checking software, is important to ensure

resistance to radiation damage. Because of the small market for space-qualified processors, companies have had a difficult time justifying the expense of developing radiation-hardened processors. Consequently, available spacecraft-qualified computers have lagged far behind modern computing capabilities.

For the past several years, Sandia National Laboratories, NASA-JPL, the National Reconnaissance Office, and the Air Force Research Laboratory have been working to develop a radiation-hardened version of Intel's Pentium chip in an effort to improve the performance of available space processors. These chips are expected to be on the market in the 2003-2004 timeframe and are thus viable options for the Trailblazer flight computers (AFRL Public Affairs, 1998).

While radiation-hardened Pentiums are still a few years off, NASA has experimented with Pentium laptops augmented with error correction and detection software. The Advanced Portable Workstation (APW) features a 90 MHz Pentium with a 512K secondary cache memory. It has 32 MB high-reliability DRAM with Error Correction and Detection. It has a 3.5" floppy drive and a removable rugged 260 MB cartridge drive. The display is 11", 1024x768 SVGA, 256-color AM-LCD. It also features NTSC video conversion, capture and display. The laptop is 11.34 kg in mass (APW II, 1995). When this computer was flown, in 1996, it was roughly equal to standard terrestrial laptops. It was not, however, certified for shuttle flight control – that function remains with the archaic GPCs.

NASA successfully conducted a wireless network experiment (WNE) aboard Atlantis and Mir in 1996. This experiment marked the first use of a wireless client-server network in the space environment. It studied and evaluated electromagnetic

compatibility, computer device performance, wireless network performance, and human factors design issues (Mir Wireless Network Experiment, 1997).

A data transfer rate of over 1.2 MB per minute was demonstrated, with over 7.6 MB of data transferred onboard Atlantis. The data transfer was also successful onboard Mir. The experiment verified the viability of wireless networks in spacecraft. Networks operating in the 2.4 GHz band at 50 mW output power can be used successfully aboard spacecraft. The networks did not cause electromagnetic interference to spacecraft or payload systems (Mir Wireless Network Experiment, 1999).

Trailblazer will assume developments in line with current space computer research, though it will not extrapolate far beyond existing capabilities. It will assume a radiation-hardened Pentium-class processor, with essentially no memory limitations on RAM or storage space. It will also assume all flight computers on the CM are connected through a wireless network. The CM network can communicate with counterpart networks on other LTV spacecraft. Whenever two or more LTV spacecraft are docked or in close proximity, the computers on the docked vehicles will be linked in a single wireless network.

Trailblazer will not assume the mass and power requirements of the APW computer, as that would be unnecessarily conservative. The APW is clearly no longer being produced – regardless of what model laptop it was – and could not be used under any circumstances. As a conservative baseline, the laptop on which this dissertation is being written – an HP Pavilion N5210 – will be used as a mass and power estimate for the CM. Consequently, the CM flight computers will each be assumed to mass 3 kg and require 65 W. (Given the trend in laptops, the computer ultimately used will be lighter

and will require less power. Even though this laptop was produced in 2000, it is already off the market and the 2002 notebook computers are indeed lighter and require less power.)

The CM will be equipped with five flight computers, ensuring both redundancy and adequate computational power. Like the shuttle GPCs, the computers will contain identical flight software. In fact, all flight software for all LTV spacecraft will be stored on each computer. In effect, any flight computer – not just on the CM but also on any LTV spacecraft with the exception of PM2 – will be capable of driving any LTV system.

4.5 Docking Systems

The Crew Module will at various points along its trajectory dock with all five of the other LTV spacecraft during the course of a lunar transfer. To accomplish these dockings, the CM is equipped with two docking ports – one on the dorsal surface, and one behind the aft propulsion unit. The aft docking port is used to dock with PM1, PM2, and the FT. The dorsal docking port is used to dock with the ADV and AM. It is also used for shuttle and station dockings. The dorsal port is the only one through which crew will traverse and the aft port is the only one through which refueling, power, and heat transport lines must pass.

The standard docking port for the LTV is the Magnetic Docking Aid System (MDAS) (Schneider, Nagy, Schliesing, 1996). Magnetic docking was proposed in a NASA-Johnson Space Center study to reduce the loads associated with traditional spacecraft docking and the associated risks. In traditional docking, two vehicles essentially "ram" each other at a low speed in order to trigger the mechanical systems in a docking mount. With magnetic docking, the vehicles actually come to a total stop with

respect to each other. Electromagnets then pull the vehicles together in a significantly milder manner.

MDAS configurations can be active, passive, or active-passive. All three configurations include an Androgynous Peripheral Assembling System (APAS) docking mount. Figures 4-8 and 4-9 show the APAS docking mount. The active configuration also includes two extendible booms, shown in figure 4-10, each of which has a 2025 N electromagnet (Dura Magnetics, 2002) at the end. The passive configuration includes two steel plates mounted 180 degrees apart along the APAS circumference. A representative configuration is shown in figure 4-11. The active-passive configuration has a steel plate surrounding each boom, such that the plate is flush with the electromagnet when the boom is fully retracted. The CM includes two active MDAS. Figure 4-12 shows an illustration of an active MDAS on the shuttle external airlock, positioned beneath a Russian spacecraft's passive MDAS (presumably the Mir) with the two spacecraft in position for docking.

The CM is also equipped with six steel plates for use by the AM's Magnetic Guide System (described in chapter seven). These plates are grouped in two sets of three on the vehicle surface. The plates in each set are mounted at sixty-degree intervals as shown in figure 4-13.

Each APAS requires 116 W during the docking phase (Patrick, 2002), each boom requires 13.5 W (assumed to be the same as the APAS "extend/retract" power requirement [Patrick, 2002]) and each electromagnet requires 26 W (Dura Magnetics, 2002) for a total of 195 W per MDAS. This is, of course, a transient power requirement as power is only required while the system is capturing or releasing a spacecraft.

4.6 Thermal Control

Active thermal control will be utilized to maintain the crew module's temperature. The typical path for a thermal control system (TCS) is for heat to be acquired from various heat sources in the spacecraft, transported via some heat transport system to radiators, and rejected by the radiators into space. The first step in sizing the TCS is to determine the maximum thermal load. This is the sum of the electrical power plus the crew heat output. Crew heat output is estimated at 0.1 kW per crewmember (Larson and Pranke, 1999). The TCS must be sized based on the maximum power level. As will be seen later in this chapter, that power level occurs in lunar orbit and is 5.18 kW, resulting in a thermal load of 5.38 kW.

With this information, heat exchangers can be sized. Two types of heat exchangers are used. Cabin air heat exchangers remove heat from the ambient air. Coldplates are attached to avionics equipment and transfer heat directly from the avionics.

Cabin air heat exchangers will be sized first. The mass (in kilograms) is estimated from the parametric 17 + 0.25 x heat capacity (in kW) (Larson and Pranke, 1999). The capacity is the 5.38 kW previously identified minus the avionics heat source (0.365 kW), resulting in a mass of 18. 25 kg. Coldplate masses are estimated from the parametric 12 x avionics heat capacity (in kW) (Larson and Pranke, 1999). This results in a mass of 4.38 kg.

Heat pumps are sized next, using the mass parametric 4.8 x loop capacity in kW and the power parametric in watts of 23 x loop capacity (in kW) (Larson and Pranke, 1999). This results in a mass of 25 kg and drawing 124 W.

To complete the sizing of the internal TCS loop, it is necessary to size the plumbing and valves, instruments and controls, and fluids. The parametric for these masses requires first sizing the radiator, so the TCS loop will be completed after radiator sizing.

Radiator sizing is dependent on the location of the radiator, as the average radiator temperature and approximate heat rejection varies. Table 4-3 shows typical values for heat rejection by space radiators. It is important to note that the heat rejection is per radiating area – often both sides of a radiator are used for heat rejection so the radiating area is double the radiator length times width in the case of a rectangular radiator.

As seen in Table 4-3, the most demanding flight phase in terms of radiator size is LEO, where the heat rejection is 104 W/m^2 and the radiator temperature is 270 K. The power load in LEO is 5.38 kW, as will be shown in the power section of this chapter. Radiator surface area is determined by dividing vehicle power (W) by heat rejection. For a two-sided radiator, the result is divided by two. For the CM, this results in a radiator size of 26 m^2. The mass is estimated by the parametric 8.5 x surface area (Larson and Pranke, 1999) and is 218 kg. The CM will use two retractable two-sided radiator wings, each measuring 2.29 m in length and 2.8 m in width. They will be mounted on the underside of the solar array wings, perpendicular to the array surface, such that they will be in the shadow whenever the arrays are tracking the sun.

Now that the radiator has been sized, the rest of the TCS loop can be determined. The mass for plumbing and valves is estimated at 15% the mass of the active TCS (radiator, pumps, coldplates, and heat exchangers). Instruments and controls are estimated at 5% the mass of the active TCS and fluids are also estimated at 5% of the

active TCS mass (Larson and Pranke, 1999). This results in a plumbing and valve mass of 40 kg, an instruments and controls mass of 13 kg, and a fluid mass of 13 kg. This yields a TCS loop mass of 115 kg. For a fully redundant TCS system, there should be two loops, which means it will be necessary to double the mass of the heat exchangers, coldplates, pumps, plumbing and valves, instruments and controls, and fluids, resulting in a TCS system mass of 218 kg for the radiator and 230 kg for the redundant loops.

It should be noted that the TCS will not always direct heat flow to the CM radiators. The radiators cannot be used during entry or when the CM is docked to the AM. At these times, other solutions must be implemented.

Heat transport plumbing lines also pass through the aft docking port and heat can be routed in this direction. When docked to a FT or PM1, the TCS can be integrated if needed, allowing vehicles to pass TCS fluid from one vehicle to another. When CM and PM1 are docked to the AM, the AM TCS provides heat rejection for the entire vehicle (because the CM and PM1 radiators are not exposed to space and cannot radiate heat away from the vehicle). During this time TCS fluid is circulated through all three vehicles to radiators on the AM.

The crew module will keep the current thermal protection system (tiles) under development for the X-38. However, if there is a need to conduct an entry, no support vehicles are available to provide thermal control and heat radiation is not an option. Consequently, a heat sink is used. Water will be utilized as a heat sink, using water from multifiltration tank 1. The necessary mass for a heat sink is sized by Larson and Pranke (1999) and is the heat rejection rate (in kW) times the mission duration (in seconds) divided by the latent heat of vaporization (in kJ/kg). The latent heat of vaporization for

water is 2500 kJ/kg. The mission duration for entry is estimated at 6300 seconds, which is the time from deorbit burn through instrument shutdown after landing. The heat rejection rate is the sum of the electrical power during entry plus the crew heat output. As will be shown in the power section, the electrical power load is 1.78 kW, resulting in a heat rejection rate of 1.98 kW (adding the heat output from the two crewmembers). This results in a required water mass of roughly 5 kg. Given that multifiltration tank 1 holds 76.03 kg, it is more than adequate to serve as a heat sink. The temperature rise experienced by the water can be predicted by dividing the energy transferred to the water by the water mass and specific heat. The specific heat of water is 4186 J/kg°C. The energy transferred to the water is obtained by multiplying the heat rejection rate (in W) by the mission duration. This yields a water temperature rise of 39.17°C. The water is nominally at 50°C, so it will heat only to 89.17°C – it will not become hot enough to boil.

4.7 Communications

The CM will include a communications system capable of supporting voice, video and data transmissions between the CM and the lunar surface base, other spacecraft, astronauts on EVAs, rovers, and mission control. A data rate of 10 Mbps will be required for video transmission (Larson and Pranke, 1999). This is significantly larger than what would be required for voice only, which would be roughly 2.4 to 8 kbps (Larson and Pranke, 1999; Larson and Wertz, 1992). Data communications have an extremely wide range of data rates, from on the order of kbps or fewer to the order of Mbps (Larson and Pranke, 1999). Consequently, the video transmission data rate will be the primary driver for the communications system design. The CM will accommodate a data rate of 12 Mbps to allow for 10 Mbps video and 2 Mbps for telemetry and other

data. Table 4-4 indicates a preliminary link budget for the CM communications system. The system is sized to accommodate a communications range from Earth to L1. It should never need to transmit further than the Earth to L1 distance because when it is beyond L1 it can utilize the PM1 or FT transmitter, both of which are sized to reach Earth from the moon. The distance from Earth to L1 is 346,069 km.

The CM – and all LTV spacecraft – will utilize a 46 GHz U-band communications frequency to communicate among themselves and the FTDRSS network (A number of short-range RF antennas will also be mounted on the vehicle exterior to allow for space-to-space communications with nearby spacecraft.). This frequency is currently allocated for future US government mobile, MSS, and radionavigation satellite systems, so provisions will need to be made to reallocate spectrum for the LTV (Neuhaus, 2001). The wavelength is simply the speed of light divided by the frequency, or 0.0065 m.

Sizing the antenna and power necessary for this system requires a link budget analysis. In its most general form, this analysis is summarized by the following equation (Larson and Pranke, 1999):

$SNR_{avail} = EIRP + G/T - L_{fs} - L_{other} - k - R_d$, where

SNR_{avail}	= available signal-to-noise ratio on the link
EIRP	= effective isotropic radiated power of the transmit terminal
G	= receive antenna gain
T	= system noise temperature of the receive terminal
L_{fs}	= free space signal loss
L_{other}	= other link loss (antenna pointing, rain, atmospheric absorption, and implementation).
k	= Boltzmann's constant (-228.6 dBW/K·Hz).
R_d	= data rate

The receive antenna's gain is given by $G = 20.4 + 10 \log (\eta) + 20 \log (f) + 20 \log (D)$, where η is the antenna's efficiency (typically 0.55 for parabolic-dish antennas), f is the frequency in GHz, and D is the receive antenna diameter. G is expressed in dB (Larson and Pranke, 1999).

The system noise temperature consists of three components: antenna noise temperature, line-loss noise temperature and receiver noise temperature. Typical temperatures vary from 450K to 700K. Larson and Pranke (1999) use a sample value of 500K, which will be used in this analysis. T in dB is calculated by multiplying 10 by the log(T) (Larson and Pranke, 1999).

The free space loss in units of dB is given by $L_{fs} = 92.45 + 20 \log (f) + 20 \log (s)$ where s is the distance, in this case the distance from Earth to L1. Other loss sources typically considered in satellite communications are rain loss, atmospheric loss, and pointing loss. Rain and atmospheric loss are zero in this case, because the LTV communications architecture is an entirely space-to-space link. The space-to-ground segment is handled by FTDRSS. An average value of 0.5 dB is used for the pointing loss, as suggested by Larson and Pranke (1999). The data rate was discussed previously and is the 12 Mbps necessary to support voice, video and data.

The signal-to-noise ratio available at the receiver is given by the SNR required plus the margin. For BPSK modulation (recommended by Larson and Pranke [1999] as a simpler design than other modulations) at a BER of 1×10^{-5} (also recommended by Larson and Pranke [1999]), the SNR is 9.6 dB and the margin is 2 dB, resulting in a SNR_{avail} of 11.6 dB (Larson and Pranke, 1999).

The final parameters that must be determined are the transmit gain and transmit antenna diameter. The transmit gain in dB is given by G_T = EIRP - 10 log (P), where P is the transmit power in watts. The transmit antenna diameter is given by

$$D_T = \sqrt{\frac{10^{G_T/10}}{\eta}} \frac{\lambda}{\pi}$$

Following through with these calculations and iterating to ensure that transmit and receive antennas have the same diameter and supplying 100W for transmit power, the CM antenna is sized with a diameter of 0.779 m.

Mass estimation is accomplished assuming a linear scaling from the FireSat communications antenna and transmitter in Larson and Wertz (1992). This yields an antenna mass of 9.34 kg and a transmitter mass of 23.25 kg. The CM carries two antennas, mounted on opposite sides of the propulsion frame, to ensure coverage at all vehicle attitudes and two transmitters for redundancy. Each antenna is used for both transmission and reception. Like the current TDRSS, code-division multiple access (CMDA) is employed to allow multiple simultaneous uplinks and downlinks.

The CM also carries two satellite phones to enable low volume data transfer from entry through post landing. As an example of a representative system, this conceptual design uses the Iridium Airsat 1, which masses 6.59 kg for a complete system and can be used below 55,000 feet (Using Iridium, 2002). Presumably, it should not be difficult for a satellite phone provider to modify a phone to operate at higher altitudes, possibly even in low Earth orbit. Use of Iridium allows for all practical purposes the same coverage as Inmarsat and significantly greater coverage than Globalstar. (Iridium does operate at higher latitudes than Inmarsat, but the CM will not fly in those regions. Globalstar has

virtually no ocean coverage and depending on the landing site selected, the CM might fly over oceans at low altitudes.)

4.8 Propulsion

The Crew Module will contain an Auxiliary Propulsion System (APS) and an Attitude Control System (ACS). Because the CM is intended for extended periods in space between engine firings, it is impractical to use cryogenic propellants. Consequently, storable propellants will be used. Both APS and ACS will use monomethyl hydrazine (MMH) and nitrogen tetroxide (N_2O_4). These propellants are hypergolic, eliminating the need for an igniter and increasing engine reliability. They are also storable, eliminating boiloff concerns present in cryogenic propellants. Nitrogen tetroxide is storable in liquid form between a range of –11°C and 21°C, while monomethylhydrazine is liquid between –52°C and 87°C (N204/MMH, 2002). Despite the high toxicity of these propellants, they remain the fuel of choice for space missions due to their ease of storage and the increased engine reliability from using hypergolic fuels. This propellant combination has been used since the late 1950's and is one of the most commonly used spacecraft propellants.

The APS will be responsible for providing delta-v for L1 capture and deorbit from LEO. The ACS will be responsible for vehicle pointing whenever the CM is flying separate from PM1 or a FT. When docked to one of the two vehicles it serves as a backup or supplemental ACS.

The APS is mounted on a propulsion frame behind the CM. This frame contains structural supports for the aft docking mount, APS fuel tanks and engine, radiator and solar array assemblies, and power, thermal, and fuel lines to a docked vehicle. The entire

propulsion frame assembly is jettisoned and discarded following deorbit burn if the CM executes an atmospheric entry. Unlike the APS, the ACS is fully integrated into the CM spaceframe and is not jettisoned.

Engine Selection

In order to comply with design requirements, the CM must use existing rocket engines or engines in development. To this end, the CM will use the Boeing RS-72 (RS-72, 2002) as its APS engine. Parameters for the RS-72 are given in Table 4-5. This engine has the highest Isp of any hypergolic upper stage currently in service, making it particularly attractive for the LTV. The CM will use a single RS-72.

The X-38 CRV uses a compressed nitrogen system for attitude control (Dempsey, 2000). However, this system is inherently limited in performance and endurance. Consequently, it will not be used for the CM ACS. Instead, the General Dynamics R-4D engine will be used. Ironically, this is the successor to the attitude control thruster used in the Apollo program. The current version of the R-4D is flying on the U.S. Navy's Leasat, Insat 1, Arabasat 1, HS-393, HS-601, Milstar, Intelsat 6, Italsat, Olympus and Eurostar (R-4D – Astronautix, 2002) Table 4-6 gives parameters for the R-4D. The CM will use sixteen R-4D thrusters.

APS Performance

As shown in chapter three, capture into L1 requires a delta-v of 0.8104 km/s. Deorbit requires a delta-v of 0.7433 km/s. The fuel requirements for these transfers can be calculated by the formula $m_{fuel} = m_{vehicle} \cdot (\exp(\Delta v \cdot 1000/9.81/Isp)-1)$, where Δv is in units of km/s and all masses are in units of kg. The vehicle mass will be determined in the mass properties section to be 13,882 kg. This results in a fuel mass of 3843 kg for L1 capture and 3488 kg for deorbit. Given the RS-72's oxidizer to fuel ratio of 2.05, this

results in 1260 kg MMH and 2583 kg N_2O_4 for L1 capture, and 1144 kg MMH and 2344 kg N_2O_4 for deorbit. Burn time (in seconds) is determined by $m_{fuel} \cdot 9.81 \cdot Isp / Thrust$ and is 230 seconds for L1 arrival and 209 seconds for deorbit.

ACS Configuration

ACS thrusters will be mounted primarily in four clusters of engines near the center of mass, on each side, the top, and bottom. Engine configuration is shown in figure 4-14 (Arrows indicate the direction of propellant exhaust.). Engines 1, 2, 3 and 15 are located on the top cluster. Engines 4, 5, and 6 are located on the starboard cluster. Engines 10, 11 and 12 are located on the port cluster. Engines 7, 8, 9 and 14 are located on the bottom cluster. Engines 13 and 16 are located on the vehicle aft.

This configuration will allow the CM to perform any X, Y, or Z-axis translation, or any roll, pitch, or yaw rotation with a two-engine burn (Axis conventions are +X = forward, +Y = port, +Z = up, +roll = port wing up, +pitch = nose up, +yaw = nose right.). Roll and X translation are redundant for any single engine and certain two-engine failures with no loss in performance and no increase in fuel expenditure. Maneuvers can still be completed for other engine failures with a combination of maneuvers in other axes (i.e. in the case of a loss of yaw capability, a roll-pitch-roll sequence can still accomplish a yaw maneuver.). Additionally, while connected with PM1 or a FT, all rotations and translations are redundant for all single engine failures and most are redundant for any two-engine failure with zero performance loss or propellant use increase. Generally, when the CM is docked to PM1 or a FT, the aft firing thrusters (engines 13-16) will be deselected and the aft firing thrusters on the docked vehicle will be used in their place. Attitude Control thruster selection for each single axis maneuver is shown in Table 4-7.

ACS Performance

Preliminary estimations for the CM ACS required approximating the CM moments of inertia. Using a simple rectangular block estimation ($I_{ii} = [a^2+b^2]\ M/12$ for each axis, where a and b are vehicle dimensions on the other two axes) and taking the average CM fully fueled mass, moments of inertia were determined as follows: I_{xx} = 43721, I_{yy} = 137739, I_{zz} = 151337.

The torque is next determined for each thruster. The torque is simply the thrust times the moment arm. Side mounted thrusters all have moment arms of 3.09 m and top/bottom mounted thrusters have moment arms of 1.602 m.

The ACS is sized to maintain a deadband of 10 degrees in roll, pitch, and yaw (A deadband is an "envelope" of allowable degrees through which a spacecraft can rotate when the spacecraft is configured to hold a particular attitude or rotational rate.). The maximum allowed angular velocities (above or below its commanded state) are 0.034 degrees per second in roll, 0.01 deg/sec in pitch, and 0.02 degrees per second in yaw. These limits are designed to most efficiently utilize the R-4D's minimum impulse bit.

With this information, fuel requirements can be determined for each axis. The pulse length (duration the thruster fires) is determined by the formula: $\omega \cdot I_{ii}/T$, where ω is the angular velocity (in radians), I_{ii} is the moment of inertia for the axis in question, and T is the sum of the torques of the thrusters firing.

Assuming the maximum allowed angular velocity to be the actual spacecraft angular velocity, the interval between each thruster firing is determined by dividing the deadband by the angular velocity.

The number of thruster firings per day is then determined by dividing the number of seconds in a day by the sum of the pulse length and the interval between thruster firings. The total thrust time per day is then found by multiplying the number of thrust firings per day by the pulse length. The total impulse per day is found by multiplying the total thrust time per day by the total thrust per firing (sum of the thrust of each engine involved). Finally, the fuel requirement per day is found by dividing the total impulse by Earth gravitational acceleration (9.81 m/s^2) and engine Isp. This process is conducted for each axis to determine the total fuel requirement per day. The CM will assume a requirement to carry 6.5 days worth of ACS propellant. This assumes a scenario where the CM must provide attitude control for the entire flight from LEO to LLO.

Additional propellant is also sized for proximity operations – dockings and separations. The CM will dock with PM2 in LEO and PM1 at L1. Each docking is assumed to require 30 seconds of dual thruster firings. Fuel mass is found by dividing the total impulse by Earth gravitational acceleration and engine Isp, just as in the previous sizing. Separations are assumed to require only a 2 second dual thruster firing and are sized in the same manner. The CM will separate from PM2 en route to L1 and from PM1 in LEO prior to the beginning of the next lunar mission.

Total ACS and proximity operations fuel is found to be 58 kg, of which 22 kg is MMH and 36 kg is N_2O_4.

Tank Sizing

Fuel tank sizing is fairly straightforward, using mass parametrics provided by Larson and Wertz (1992). For an unpressurized tank, the following formula is applied as a mass parametric: $m = m_{fuel} \cdot (1/0.89 - 1)$. This parametric yields a mass estimate for the

propulsion system, excluding the engine and fuel (i.e. tanks and plumbing). The CM contains four fuel tanks: the APS MMH and N_2O_4 tanks and the ACS MMH and N_2O_4 tanks. The APS MMH tank is found to be 156 kg and the N_2O_4 tank is found to be 319 kg. The mass of the ACS MMH tank is 3 kg and the N_2O_4 tank is 4 kg.

4.9 Power

CM power is supplied through a combination of solar arrays and batteries. The CM flight profile dictates this solution over alternative power systems, such as fuel cells or flywheels. Fuel cells are advantageous for short duration missions. Even though a human crew only occupies the CM for short periods of time, it remains in space for years and there would be a disadvantageous impact of having to continually restock its fuel cells. Flywheels are by nature massive, and are more appropriate for space stations than for mobile spacecraft. Nuclear power (whether fission reactors, RTGs, or other nuclear power sources) is politically nonviable and carries a set of technological obstacles making it also an undesirable solution.

Table 4-8 details the CM power requirements. The total power required for all CM systems is 6.435 kW. However, in practice this power level is never required. All of the equipment is not used in all flight phases, and several items are only powered for short periods of time. Table 4-9 gives an approximate power requirement by flight phase. With these requirements established, the power system can be sized.

Batteries

It is simpler to size the batteries first, as the batteries will directly impact solar array size. The CM will use lithium metal dry polymer electrolyte batteries. This battery has an energy density in the range of 250-350 Wh/kg, a cycle life of greater than 1000

cycles, and self-discharges at a rate of much less than 1% per month (Lithium Power, 2002). The batteries can be molded into any shape and can thus be formed to make maximum usage of CM internal volume.

A round trip efficiency of 92% and a depth of discharge of 80% is assumed in this analysis. An energy density of 300 Wh/kg will be assumed. Table 4-10 shows the duration of eclipse periods for each flight phase. Eclipse kWh is the driving factor in battery sizing and it is the Earth entry flight phase that has the greatest requirement, with 3.115 kWh. The battery mass is obtained by converting the eclipse kWh to Wh and then dividing it by energy density and depth of discharge. This yields a battery mass of 13 kg for the CM.

With the battery mass sized, the next step is to determine the charging requirements that will be placed upon the solar arrays. Thus, for each flight phase, a power requirement must be determined.

The first step in this process is to determine the kWh that must be accumulated in preparation for each eclipse period. This is found by dividing the eclipse kWh by the battery round-trip-efficiency. The one exception to this is the kWh in preparation for Earth entry, which is found by dividing the vehicle power (during TEI) by round trip efficiency and multiplying the result by the total time of entry. Once this kWh has been found, the required array power is found by dividing the kWh by the available charging time (the time the spacecraft is between eclipse periods). This result is the array charge power in Table 4-10.

Solar Arrays

Stretched Lens Array (SLA) triple-junction solar arrays developed by Entech, Inc (O'Neil et al, 2001) will be used on the CM, taking advantage of recent improvements in solar power technology. The SLA uses stretched membrane, silicone Fresnel lenses to concentrate sunlight onto triple junction GaInP/GaAs/Ge photovoltaic cells. The array has a standard efficiency of 27.4%. The SLA wing – including lenses, photovoltaic cell flex circuits, composite panels, hinges, yoke, wiring harness, and deployment mechanisms – has a mass density of 1.67 kg/m^2 and a power density of 300 W/m^2 (O'Neil et al, 2001). The SLA is developed from the SCARLET solar array flown on Deep Space One and most SLA components were successfully proven on that spacecraft (O'Neil et al, 2001).

The power-conversion efficiency can be solved for the area to identify the size solar array required: $P = \phi_{Sun}\ \eta\ F_p\ A\ \cos(\theta)$, where P is the power in watts; ϕ_{Sun} is $[1368/d^2]$ W/m^2, where d is the distance to the Sun in astronomical units; η is the conversion efficiency, which is found by $\eta = \eta_o\ (1 + T_c\ [T-T_o])$, where η_o is the standard efficiency, T_c is the normalized temperature coefficient ($x10^{-3}$ per °C) and is –2.3 for a triple junction array, T is the operating temperature (80 °C) and T_o is the standard (lab) temperature (25 °C); F_p is a packing fraction, typically 85 to 90%; and θ is the angle of the array normal to the Sun (Larson and Pranke, 1999).

To solve this equation for the area, the power must first be determined. The power is the combination of the system power listed in Table 4-9 and the battery charging power listed in Table 4-10. The solar arrays must be solved for the flight regime with the greatest combined power requirement. This requirement is 5.180 kW, occurring in lunar

orbit. Using a packing fraction of 85%, assuming $\theta = 0$, and applying a 58% loss factor suggested by Larson and Pranke (1999) yields an array size of 32.08 m^2. This in turn suggests an array wing mass of 54 kg.

This array will be a tracking array and the drive mechanism's mass can be estimated as a parametric function of the array mass: $m_{drive} = (-0.014\ m_{array} + 20.6)\ m_{array}/100$ (Larson and Pranke, 1999). Because the thermal radiators are mounted on the solar arrays, their mass is included in the array mass for this analysis. The CM array drive is accordingly 46 kg. The CM will divide these parameters over two array wings, each of which is 16.04 m^2, 27 kg, and measures 5.6 m by 2.87 m.

One sun sensor will be located on each array wing to track the sun's position. Inputs from these sensors and measurements of generated power will be used to adjust the arrays for optimum energy generation. The array wing provides for 360-degree rotation along its axis and 180 degree rotation perpendicular to its axis, thus enabling it to track the sun regardless of vehicle orientation.

4.10 Mass Properties

Table 4-11 gives the final mass summary for the CM. A 15% growth margin is included to account for any unforeseen growth in vehicle systems. Vehicle masses vary slightly depending on whether the CM has reached L1. This difference is only the variation in fuel used for L1 capture or deorbit. In most other aspects, the CM has the same mass properties throughout the lunar mission. The exception is entry. During entry, the CM will jettison the dorsal docking port and the propulsion frame after deorbit burn but prior to atmospheric interface. This removes the APS engine and tanks, solar

arrays, U-band antennas, both docking ports, and the radiator. The resulting entry mass is 12,127 kg.

4.11 ELV Deployment

An Atlas V Heavy booster launches the CM into orbit. The booster is responsible for lifting it into a 407 km altitude orbit at a 28.5-degree inclination. Five STS grapple fixtures (two nose, three aft) will be used to hold the CM in place in the booster payload shroud. The booster is not responsible for supplying any power or thermal conditioning to the CM after launch (though the launch pad does need to supply both). If necessary, the CM can supply inertial and GPS guidance data to the booster. PM1, described in the next chapter, will ride into space on the same booster, already docked to the CM.

In theory, the CM could be launched by a Space Shuttle, but there is limited value in doing so. In order to allow sufficient time to fully check out the vehicle, it must be in space several weeks to a few months before departing for a lunar mission. Consequently, it should not be launched on the same shuttle flight that is intended to transport a lunar crew into space (as the shuttle cannot remain in orbit long enough to conduct such a checkout). It is most cost effective to launch the CM on an unmanned rocket and send crew up to the CM only after Mission Control is satisfied with the performance of CM.

Chapter Five – Propulsion Module 1

5.1 Overview

PM1, shown in figure 5-1, plays a role in the LTV architecture similar to that played by the Apollo Service Module. Because the CM cannot carry the necessary propellant for orbital transfers, PM1 and PM2 are used to transport the CM between Earth and lunar orbits, with PM1 taking up the responsibility from L1 forward. Unlike the Apollo Service Module, PM1 does not provide cabin air to the crew; PM1 is only responsible for propulsion, with backup capabilities in the areas of power and thermal control. Excluding solar array and radiator dimensions, PM1 measures 5.64 meters in length and 2.4 meters in width and height.

5.2 Radiation Protection

As mentioned in chapter four, the crew's primary radiation protection is provided by PM1. Space radiation is not constant, with radiation coming from multiple sources including: Galactic Cosmic Rays, Solar Particle Events, and the Van Allen Belt. Unlike cosmic and solar radiation, the Van Allen Belt is confined to a localized zone. Unless a spacecraft's orbit spends a significant period of time in the Van Allen Belt, it generally is not considered a significant source of radiation concern. Other sources, however, are more serious. "Life threatening solar flares from Anomalously Large events occurring during a solar maximum are readily detected, but not reliably predicted" (Ward, 1991).

Solar flares can be detected from the burst of electromagnetic radiation that originates in the flare event. This radiation burst reaches Earth in about eight minutes. The more damaging solar energetic particles (SPEs) can arrive as soon as eighteen

minutes after the flare (Radiation Hazards, 2002). Consequently, any astronauts in space at the time of a flare may have as little as ten minutes warning. However, there is a blind spot in this technique as some coronal ejections can produce SPEs without producing a telltale flare (Radiation Hazards, 2002).

It is interesting to note the differences in radiation exposure limits among different career fields. The national limits for radiation exposure for non-radiation workers are 500 millirem per year or 300 millirem per quarter. The radiation exposure limit for radiation workers is 5000 millirem per year. The radiation exposure limit for shuttle astronauts is 50,000 millirem per year (Navy, 1991). This is extremely curious given that a typical astronaut will have at most one shuttle flight in a given year.

Between 1956 and 1989, Anomalously Large events have occurred at rem levels ranging from 30 rem to 498 rem. These occurrences are random and space missions cannot be planned in advance to avoid them. Unprotected astronauts can be injured or killed by the more severe events.

The 498 rem event, which occurred August 4-7, 1972, is particularly serious. A 498 rem dose would cause an exposed human hematologic derangement, nausea, vomiting, diarrhea, prostration, bleeding, infection, and a 50% mortality rate (Ward, 1991). According to Ward, a 50 rem dose would cause the same effect if the 50 rem level was maintained for a ten hour period of exposure.

This radiation can be countered if astronauts have some form of shielding available to them for use during times of maximum dose rate. During other periods, the dose rate is acceptable without significant shielding (Ward, 1991). It is fortuitous to note that the highest levels of radiation are due to solar activity (Ward, 1991). This suggests

that a spacecraft radiation shield may only need to protect from a single source direction, namely the sun.

Polyethylene Shielding

Jarrett (1992) recommends the use of polyethylene shielding to protect human spacecraft from this radiation. The high hydrogen content of polyethylene makes it attractive for use as a shield. Low atomic mass elements are more effective shields than high atomic mass elements. The shield proposed by Jarrett is formed from polyethylene, sandwiched between aluminum foil. Borated polyethylene (containing boron 10) is layered on the inside of the shield.

Jarret (1992) extensively describes the protective capabilities afforded by this shield. A shield of this type with a 0.304-meter thickness will provide an order of magnitude decrease in neutron dose and will reduce the gamma dose by a factor of three. The combination of aluminum, polyethylene, and boron gives the shield its protective abilities. Aluminum is not a good shield for proton or neutron radiation, but it is a good shield for Beta and Gamma radiation, and will thus attenuate the heavy particles of Cosmic sources. Polyethylene, on the other hand, provides a good shield against proton and neutron radiation, comparable in performance to water. Because the outer layer of the shield is aluminum, it can attenuate particles from Cosmic rays before they enter the polyethylene, generating neutron flux outside the shield. The borated polyethylene layer reduces this further. The boron 10 absorbs thermal neutrons and forms boron 11, which decays to Lithium and an alpha particle. The alpha particle is then trapped in the polyethylene. Unborated polyethylene also attenuates neutron radiation by elastic

scattering, photoelectric effect, and Compton scattering. The polyethylene also attenuates Gamma radiation, providing further protection (Jarrett, 1992).

Polyethylene is currently being used as a makeshift radiation shield on the International Space Station. A combination of ceiling water storage units and polyethylene bricks is located in the temporary sleep quarters aboard the US Lab Module (Space Radiation Health Newsletter, 2001).

PM1 Radiation Shield

A primary radiation shield is mounted on PM1, mounted directly in front of the fuel tanks. Other than some structural penetrations and piping, the shield is a solid mass.

The shield is 1.75 meters high by 2.34 meters wide, which is the cross sectional area of the CM pressure volume at its maximum width and height. The shield is 0.304 meters in thickness. The shield density is 1041.2 kg/m^3 (Jarrett, 1992), resulting in a shield mass of 1300 kg.

This shield only provides protection in one direction, requiring the LTV to properly orient itself during any solar particle event. It offers no protection against Galactic Cosmic Rays, but due to the short mission duration of the LTV this is not a serious problem. Omni directional shielding would be required, however, for long duration spacecraft, such as a Mars transfer vehicle.

The shield is being placed on PM1 primarily due to mass considerations. The CM is near the limits of both ELVs and PM2 and the shield mass would place it over its mass limitations. PM1, however, has margin to easily absorb the shield mass.

If a radiation alert is issued, signifying some incoming radiation threat, the vehicle will immediately – and autonomously – sound an alert to the crew and position itself such

that its aft end faces the radiation source, thus providing a barrier between the crew and the radiation source.

5.3 Avionics

Because PM1 spends the majority of its time as a combined vehicle, docked to the CM, the only avionics located on PM1 will be those absolutely necessary for it to function during its few separated flight regimes. In many cases, redundancy will not be achieved solely with PM1 avionics. Separated flight is limited to initial deployment and other brief periods in LEO, the transition from LEO to CM docking at L1, and a spare PM1 that will remain at L1. At L1 and in LLO, sensor redundancy can be obtained by docking with other LTV spacecraft. In all cases, PM1 will use interchangeable sensors with those on the CM, simplifying manufacturing processes. From the manufacturer's perspective, it will not matter which LTV spacecraft will receive a particular sensor being manufactured.

A single SIGI GPS unit will be housed in PM1. Only one GPS will be onboard PM1 because it will never need GPS as a sole navigation source and it will not be responsible for human spaceflight unless it is connected to the CM, which has two GPS units. Four GPS antennas are located on PM1 for signal reception. For additional position and attitude determination, PM1 will use two star sensors, just like the CM. Additionally, PM1 will house one horizon sensor and six sun sensors – one sun sensor on each side of the vehicle.

Four laser rangefinders are on PM1, three surrounding the forward docking port and the fourth at the ventral docking port. The three at the forward port are used for precise position and attitude determination for dockings with the CM, PM2, or other

spacecraft. The single rangefinder at the ventral docking port serves as a backup to the navigation sensors on the Fuel Tanker or Aeroshell Module when either is attempting to dock.

The same autonomous navigation system used on CM will be utilized on PM1, using a sensor fusion from PM1 sensors and the sensors of whatever vehicle(s) PM1 is docked to.

Two flight computers are carried onboard PM1 to house the flight software. As is the case with the CM computers, each computer will contain multiple copies of all flight software and will utilize a wireless network.

5.4 Docking Systems

PM1 will be equipped with two docking ports, a forward port on the front end of the vehicle, and a ventral port on the vehicle underside towards the vehicle aft. The forward port will be used to dock with PM2 and the CM. The FT and AM will use the ventral port. The ventral port is located on the PM1 underside so as to place it as far away as possible from any potential EVA activity, thus reducing the possibility of spilled propellant from contacting the crew hatch on the CM's dorsal port. This positioning is also advantageous for docking with the Aeroshell Module, as will be seen in chapter seven.

Both docking ports will use MDAS-augmented APAS mounts, just like the CM ports. The forward port can serve as either an active or passive MDAS, while the ventral port is always the active MDAS. When the forward port docks with PM2, it is the active system, but when it docks with CM it is passive. Consequently, the forward port has the active-passive configuration described in chapter four – a steel plate surrounding each

boom, such that the plate is flush with the electromagnet when the boom is fully retracted. The ventral port is the active MDAS system for both AM and FT dockings.

The AM has a magnetic guide system that will be explained in chapter seven that works in concert with the MDAS, so the entire PM1-AM docking process could be described as semi-active for both vehicles. PM1 has six steel plates for use by the AM's magnetic guide system, arranged similarly to those on the CM.

Both docking ports contain fuel, power, and thermal fluid transfer conduits. When the CM/PM1 is docked to a FT, the FT can refuel the CM through PM1. Additionally, the CM and PM1 can provide supplemental power and thermal control to each other through the PM1 forward port's mating to the CM aft port.

5.5 Thermal Control

An active thermal control system (TCS) will be used on PM1 to reject waste heat. The maximum thermal load for PM1 is equivalent to the vehicle maximum power level, which will be shown later in this chapter to be 1.549 kW.

Like with the CM, the first step in designing the TCS is to size heat exchangers. Because PM1 does not have a cabin, cabin air heat exchangers used on the CM cannot be used on PM1. Coldplates, however, are still used for avionics and are sized just as they were with the CM. Heat pipes are used to complete the heat exchange system. Heat pipe mass is sized by the parametric 0.000294 x capacity (in W) x length squared. The parametric 0.000000203000294 x capacity (in W) x length squared is used to determine the power requirement in watts (Larson and Pranke, 1999).

Plumbing and valves, instruments and controls, fluids, and a two-sided radiator complete the TCS and are sized with the same parametrics used in chapter four for the

CM. The total TCS mass is 216 kg and the system requires 36 W. The radiator is divided into two radiator wings, each measuring 3 meters by 2.12 meters. The radiators are mounted on the underside of the solar array wings, perpendicular to the array surface, such that the radiators are always in the shade when the solar arrays are tracking the sun.

5.6 Communications

The PM1 communications architecture is virtually identical to that aboard the CM, with the exception that PM1 is sized to transmit the entire 384,400 km distance between the Earth and moon, while the CM is only sized to transmit from L1 to Earth. Nominally, PM1 will perform communications duties while the two are docked. However, when the LTV is in range of the lunar FTDRSS satellites, both CM and PM1 may transmit together. This will allow a doubling of the data rate, up to 24 Mbps that can be transmitted to mission control. Of this, 4 Mbps is reserved for telemetry and other data while 20 Mbps is allocated for video or other transmissions.

To provide for a simpler and lower cost manufacturing process, the PM1 will use identical 0.779-meter diameter antennas as those used by the CM. Conducting the link analysis performed in chapter four with this restriction results in a 123 W transmit power and a 57 kg transmitter mass (The antenna mass is the same as the CM antenna mass.). To ensure coverage, regardless of vehicle orientation or FT docking, three U-band antennas will be mounted on PM1, one on the dorsal center, one on the ventral forward, and one on the ventral aft (behind the ventral docking port). Two transmitters will be provided for redundancy. Unlike the CM, no satellite phones are carried onboard PM1.

5.7 Propulsion

PM1 will use the same propulsion hardware used on the CM. The PM1 main propulsion system (MPS) will consist of two RS-72 engines and the attitude control system (ACS) will consist of sixteen R-4D engines.

MPS Configuration

The MPS engines will be gimbaled, much like the shuttle OMS engines, allowing for thrust vector control and the ability to perform a single engine burn in an engine out scenario. The gimbal mass is estimated using the same parametric used to estimate the solar array drive system: (-0.014 x engine mass + 20.6) x engine mass/100 (Larson and Pranke, 1999).

MPS Performance

The MPS is used for seven burns during the course of a lunar mission. The first burn captures PM1 at L1 following transfer from LEO to L1 (by PM2). Once the CM has arrived and docks with PM1, the MPS is used again to place the CM/PM1 LTV on a transfer to the moon. The third firing places the vehicle into a 100 km altitude polar low lunar orbit (LLO). The fourth MPS burn is used to leave LLO on a trajectory for L1 and the fifth burn captures the LTV at L1. After CM/PM1 dock with the AM, the sixth burn places the CM/PM1/AM LTV on a transfer to Earth. After the aerocapture atmospheric pass, the AM separates from CM/PM1 and the seventh burn is performed to circularize the CM/PM1 orbit in LEO. Delta-v, vehicle mass, fuel mass, MMH mass, N2O4 mass, and burn time are summarized for each burn in table 5-1. Burn times assume a two-engine burn. Times would be doubled for a single-engine burn. It should also be noted that the fuel mass is the fuel consumed in the burn, which is not the total fuel onboard.

ACS Configuration

ACS engines will be mounted in four clusters of four engines on the top, bottom and sides of PM1, at the vehicle center of mass. Each cluster is configured in a "+" shape, much like the Apollo Service Module thruster configuration. On the side clusters, the solar array mast protrudes through the center of the cluster. Engine numbering is shown in figure 5-2 and table 5-2.

Like the CM, PM1 will be capable of performing any X, Y, or Z-axis translation, or any roll, pitch, or yaw rotation with a two-engine burn. Roll and X translation are also redundant for any single engine and certain two-engine failures with no loss in performance and no increase in fuel expenditure. In the case of other engine failures, other rotation and translation maneuvers can be accomplished with a combination of maneuvers in remaining axes (i.e. roll-pitch-roll to accomplish yaw). And while connected to the CM or a FT, all maneuvers are redundant for any single engine failure and most are redundant for any two-engine failure with zero performance loss or propellant use increase. Generally, when PM1 is docked to the CM, all forward firing thrusters (engines 1, 5, 9, and 13) are deselected and the forward firing thrusters on the CM are used in their place. Additionally, when PM1 is docked to a FT, engine 16 is blocked by the FT and is accordingly deselected, affecting +X translation and +pitch. The resolution to this problem will be discussed in chapter eight and will involve a combination of CM and FT thrusters. Attitude control thruster selection for each single axis maneuver is shown in table 5-3.

ACS Performance

Like the CM, simple rectangular block estimations were used to approximate the PM1 moments of inertia. When CM and PM1 are docked, the vehicle moment of inertia

is the sum of the individual CM and PM1 moments of inertia. Using the average PM1 mass, the PM1 moments of inertia are I_{xx} = 81112, I_{yy} = 18658, I_{zz} = 94041. The combined CM/PM1 moments of inertia are I_{xx} = 124833, I_{yy} = 156397, I_{zz} = 245378.

Because of the symmetry of PM1's design, all thrusters have the same moment arm, hence the same torque: 1.2 m moment arm and 588 Nm torque. The ACS is designed to maintain a deadband of 10 degrees in roll, pitch, and yaw, just like the CM. Its maximum allowed angular velocities are slightly different, however, 0.009 degrees per second in roll, 0.007 deg/sec in pitch, and 0.022 degrees per second in yaw, again taking maximum advantage of the R-4D's minimum impulse bit, thus minimizing propellant consumption.

Docking, separation, and daily attitude control fuel requirements are determined in the same manner as for the CM. Because PM1 is refueled, it only needs carry required fuel for its current flight phase. For the outbound LEO to L1 segment, 54 kg are required. From L1 to LLO, 53 kg are required. From LLO back to L1, another 97 kg are used. Finally, from L1 to LEO, 45 kg are required. Hence, for tank sizing purposes, the ACS fuel requirement is 97 kg, of which 37 kg is MMH and 61 kg is N_2O_4.

PM1 Refueling

Refueling is a major activity in the PM1 flight profile. Under the constraints of using existing launch vehicles and technologies, it is impossible to launch a propulsion module that contains all fuel required to support a lunar transfer. Consequently, PM1 must refuel at various points along its trajectory. It is first fueled before beginning a lunar mission, but with only enough fuel to reach L1. It refuels three additional times: at

L1 outbound, in lunar orbit, and at L1 inbound. Each fueling tops off the ACS tanks and provides only enough MPS propellant for it to reach the next refueling point.

Tank Sizing

Unlike the CM, the MPS and ACS share the same fuel tanks. However, multiple fuel and oxidizer tanks are used. This achieves tank redundancy, such that a micrometeoroid impact or other tank failure will not destroy the entire fuel supply. The propellant lines are cross-linked, so that the MPS and ACS engines can receive fuel from any tank onboard PM1, as well as any tank in the CM or a docked FT. The system will also allow tank-to-tank transfers, such that for instance, if MMH tank 1 develops a leak, fuel can be transferred from it to MMH tank 2 and/or CM APS MMH tank, preventing a total loss of that tank's fuel. Consequently, each PM2 tank is sized to carry a maximum fuel load equal to 90% of the capacity of its corresponding CM APS tank. The APS tanks carry roughly half the fuel load used by the MPS, so PM1 carries two MMH tanks and two N_2O_4 tanks. All tanks are domed cylinders with an arbitrarily chosen radius of 0.6 m. The length of a domed cylinder (with a hemispherical dome on both ends) can be expressed by $L = (V-{}^4/_3\pi r^3)/(\pi r^2)+2r$, where V is the volume and r is the radius. The necessary volume for each fuel tank is found by dividing the fuel mass by its density (880 kg/m^3 for MMH and 1450 kg/m^3 for N_2O_4). PM1's MMH tanks are each 1.54 m in length, with a mass of 278 kg and an 1123 kg fuel capacity. PM1's N_2O_4 tanks are each 1.82 m in length with a mass of 569 kg and a 2304 kg capacity.

5.8 Power

PM1 receives electrical power through a solar array and battery configuration similar to that of the CM. The power profile for PM1 is more consistent than that of the

CM, however, as it does not have different power loads based on flight regime. Instead, it experiences a consistent 1.55 kW power load, as shown in table 5-4.

Like the CM, PM1 will use lithium metal dry polymer electrolyte batteries. Eclipse periods are, of course, the same as those experienced by the CM with the exception that PM1 does not have an Earth entry flight phase. Table 5-5 shows eclipse periods and eclipse kWh, which is the driving factor in battery sizing. Lunar orbit imposes the greatest requirement with 1.202 kWh. The sizing process is identical to that used in chapter four for the CM and in this case yields a battery mass of 5 kg.

Continuing with the process used in chapter four, a charge power of 1.68 kW is calculated and a charge kWh of 1.013 is found for LEO and 1.307 is found for LLO. The lunar requirement is the greater, and thus the system driver. It in turn yields an array charge power requirement of 1.097 kW for LLO, which adds to the 1.55 kW power load to produce a total array power requirement of 2.65 kW.

The same type of SLA triple-junction arrays used on the CM supplies this power. A total of 16.4 m^2 of array surface (8.2 m^2 for each of the two array wings on PM1) is obtained by iterating through the algorithm used with the CM. This yields an array mass of 27.38 kg. The drive system, like its CM counterpart, is responsible for actuating both the solar arrays and radiator. The drive system is sized at 25.35 kg. Each array wing has dimensions of 1.82 m by 4.5 m. Like the CM, sun sensors on each array enable it to track the sun for optimum energy generation. The array wing provides for 360-degree rotation along its axis and 180 degree rotation perpendicular to its axis, thus enabling it to track the sun regardless of vehicle orientation.

5.9 Mass Properties

Table 5-6 gives the final mass summary for the CM. A 15% growth margin is included to account for any unforeseen growth in vehicle systems. Vehicle dry mass is constant throughout the lunar transfer mission, but total mass varies with refueling as each leg of the trip requires a different fuel load. Vehicle structure is estimated as 21.06% of the dry mass, which is the average value reported by Larson and Wertz (1992) for selected spacecraft.

5.10 ELV Deployment

PM1 is launched into space on the same Atlas V Heavy that carries the CM into orbit. The booster is responsible for lifting the vehicles into a 407 km altitude orbit at a 28.5-degree inclination. A payload attach fitting will hold PM1 in place in the booster payload shroud. The fitting will interface with the PM1 aft structure and the forward APAS mount will be docked to the CM. The booster is not responsible for supplying any power or thermal conditioning to PM1 after launch (though the launch pad does need to supply both). If necessary, PM1 can supply inertial and GPS guidance data to the booster. The booster will separate as soon as orbit has been achieved. PM1-Spare (described below) will be launched with the AM on an Atlas 532.

5.11 PM1 Redundancy

In order to ensure that the crew is not stranded in space due to a PM1 total failure, a backup PM1 (PM1-Spare) will be located at L1. Clearly, should the primary PM1 fail before the CM is delivered to L1, the mission will simply be delayed until a new PM1 can be launched. If, however, PM1 fails after the CM leaves Earth orbit, PM1-Spare will be used.

If the failure is at L1, PM1-Spare is already present and can dock to the CM. Based on decisions from Mission Control, the LTV will either complete or abort the mission, using PM1-Spare as the propulsion module. If the failure is in LLO, PM1-Spare can leave L1 and propel itself to LLO. After receiving fuel from a FT in lunar orbit, PM1-Spare can dock to CM. Again, based on decisions from Mission Control, the LTV will either complete or abort the mission, using PM1-Spare as the propulsion module.

If the failure is in transit between L1 and LLO, the CM will separate from the failed PM1 and use its APS engine to return to L1 and dock to PM1-Spare. If the failure is in transit from L1 to Earth at the end of mission (after the PM1 L1 departure burn), then no action will be taken as PM1is not absolutely required (though its absence will complicate Earth arrival procedures). Options are greatly reduced if there is a failure during PM1 burn that prevents PM1 from completing the burn. However, given the high reliability of a hypergolic engine, the fact that PM1 carries two RS-72 engines, the fact that PM and CM can share propellant, and the compartmentalization of PM1 fuel tanks it is highly unlikely that any failure could result in PM1 being unable to complete its burn.

Chapter Six – Ascent Descent Vehicle

6.1 Overview

Unlike the Crew Module, no existing spacecraft can fulfill the role of a lunar lander. Competing possibilities for adaptations of existing spacecraft are station-derived cylinders, SpaceHab modules, Spacelab modules, open cockpit landers, and TransHab-derived inflatables. An open cockpit lander was not given serious consideration for the ADV, due to the chilly response it received in NASA's HLR studies. Of the remaining possibilities, the TransHab inflatable is clearly the lightest. Mass reduction is a driving consideration for the ADV because as the last link in the LEO to lunar surface chain, mass increases to the ADV carry the greatest impact to the overall program cost (financial and mass). Consequently, the ADV will utilize an inflatable crew compartment. Most vehicle systems will be housed in this compartment, making in-flight maintenance simpler. The ADV is shown in figure 6-1.

Implications of Surface Base on ADV Design and Operations

The location of the lunar surface base has significant impacts on the ADV design and operations. Depending on the location of the base and the latitude of the orbit, access to and from the base may be limited. Because Trailblazer assumes a South Pole location, the ADV will utilize a polar orbit. For orbital inclinations greater than 85° combined with base latitudes greater than 85°, continuous access to the surface is possible. Lunar mass concentrations (mascons) cause gravity anomalies that can result in small altitude drifts (~20 km) for objects in orbit (Eckart, 1999).

Base locations at equatorial sites along with equatorial orbits would also allow for continuous access to the surface (continuous ascent opportunities, descent windows every

two hours), but would have resulted in ADV altitude drifts of up to 80 km while in orbit due to lunar mascons. Base locations between 5° and 85° with correspondingly inclined orbits would have limited ascent/descent windows (~one every 14-27 days) and orbits would experience altitude drifts up to 140 km due to lunar mascons (Eckart, 1999).

It should be noted that orbital inclination also affects windows for objects to depart on direct trajectories to rendezvous with an object in Earth orbit. This, however, is not a factor for the Trailblazer design because all vehicles departing lunar orbit will refuel at L1. L1 has continuous access to and from all lunar orbital inclinations.

Differences from other Lunar Lander Concepts

A key difference between the Trailblazer ADV and its corresponding vehicle in Duke and Spudis' lunar studies (Portree, 2002) or the current lunar return strategy under development at NASA-JSC (Fletcher, 2002) is the range of the ADV. Duke's LBV travels from the lunar surface to L2 and back, while Spudis and JSC's vehicles travel from the lunar surface to L1 and back. Unlike those vehicles, the ADV travels only from the surface to a 100 km lunar orbit and back.

The advantage of L1/L2 is that it leaves the mission completely unrestrained by orbital mechanics phasing considerations. A spacecraft can launch from any point of the moon at any time and head directly for L1 or L2. For a lunar orbit rendezvous, the launch must be properly timed in order to rendezvous with an orbiting spacecraft. However, the disadvantage of L1/L2 is that it requires a much larger spacecraft. In addition to the greater delta-v required to reach L1 or L2, the spacecraft must also support the crew for a much longer period of time – a one-way trip is roughly two days, as opposed to a few hours at most. This means that the life support system is larger, more

crew accommodations are required, and the fuel resupply requirement is considerably greater.

It will be evident from this dissertation that a lunar orbital rendezvous scheme taxes the capabilities of existing launch vehicles to the limit. An L1 or L2 rendezvous is even more demanding. It does not appear that the basic architecture of Duke, Spudis, and JSC can be accomplished without a new launch vehicle (and potentially a new launch pad, new payload processing facilities, etc.).

A significant difference between the ADV and all other human spacecraft is that it is unpressurized for the majority of its operational life. When it docks to the CM (prior to descending to the lunar surface), the cabin will pressurize. Once pressurized, the astronauts will transfer over from the CM. They will transfer over fully suited, however, or will at least suit up prior to sealing the hatches and separating the two vehicles. As soon as the ADV separates from the CM, it will begin to depressurize, in preparation for its arrival on the lunar surface. By the time it has landed, it will have equalized to the lunar vacuum. It will remain unpressurized while the astronauts are at the lunar base. When the astronauts return to the ADV at the end of their lunar mission, the ADV will begin to pressurize once the vehicle lifts off and will equalize pressure with the CM once it has docked. Once the CM has departed to return to Earth, the ADV will gradually vent its cabin atmosphere to space.

6.2 ADV Configuration

The ADV is divided into two basic sections: the crew compartment and the propulsion unit. The propulsion unit contains the vehicle propulsion systems, batteries, thermal systems, communications systems, navigation sensors, landing gear, and a

docking mount used to dock with Fuel Tankers. A ladder for egress to the lunar surface is also mounted on the propulsion unit.

The crew cabin is a TransHab-derived inflatable structure that provides space for two EMU-suited astronauts, flight controls, cargo, maintenance tools, and life support systems. It also has a docking mount used to dock with the Crew Module. A hatch on the cabin sidewall is used for egress to the lunar environment.

Radiation shielding is not provided on the ADV due to the limited mission duration. As Jarrett (1992) relates, potential radiation exposure can be reduced by variation in any combination of time, distance, and shielding. As compared with the CM/PM1, distance (to the sun) is essentially the same. Shielding is eliminated, thus increasing the potential exposure, but the time is drastically lower (several hours as opposed to several days), thus decreasing the potential exposure. In fact, the mission time is less than that of a typical lunar surface EVA, where there is also no radiation shielding provided. Hence, another advantage of a lunar orbit rendezvous is that it reduces the flight time sufficiently that overall radiation exposure risk for an unshielded ADV is no greater than that for the shielded CM/PM1. Were the ADV to rendezvous at L1 instead of lunar orbit, radiation shielding would be required because the mission would then be several days in duration.

ADV Cabin Wall Thickness

Gary Spexarth of the NASA-JSC Engineering Directorate provides some background information on the JSC TransHab material thickness and density. The JSC TransHab assumed a LEO micrometeorite and orbital debris (MMOD) environment. The level of protection required (which influences thickness) was based on the "probability of

no penetration." Because the JSC TransHab model was so large in size (27.7-foot diameter, 40-foot length) the probability of a hit was high. Consequently, they needed a large amount of MMOD protection, resulting in a 16-inch thick shell. The average aerial density for their shell is 5.07 lb/ft^2 (Spexarth, 2002).

Lunar orbit is not nearly as severe a MMOD environment as LEO. Additionally, because the ADV is much smaller than the TransHab, the "viewing area" (potential points of impact) is greatly reduced, correspondingly lowering the risk of penetration. The risk is further reduced by the short fight time of the ADV. The criticality of an impact is also minimized due to the fact that the astronauts are fully suited during landing and liftoff and the vehicle is unpressurized during those periods. Consequently, the wall thickness for the ADV is reduced proportionately to the surface area ratio between the TransHab (435.36 m^2) and the ADV (28.26 m^2), resulting in a thickness of 1.04 inches. Were the ADV to be used for any function beyond that of surface to orbit taxi, a thicker cabin wall would be required.

6.3 Life Support

Life support provisions on the ADV will be minimal. The cabin is only pressurized after CM docking and it gradually depressurizes during descent. Matching the CM for dockings, the ADV will pressurize to a cabin atmosphere of 68-kPa with 27.94% oxygen, 72.06% nitrogen content. Assuming an EVA suit pressure of 35 kPa using pure oxygen, this will result in an R-factor of 1.4 and will not require any prebreathe time. Air for pressurization will be supplied by the CM, which will carry enough oxygen and nitrogen for 3.5 pressurizations – 2 nominal and 1.5 in reserve. The life support system will allow crew members to perform in-flight maintenance in a

shirtsleeve environment while the ADV is docked to the CM. However, once separated, the crew will remain in EMUs as the cabin slowly depressurizes. It is equipped with consumables for a single EVA, allowing the crew to recharge their EMUs upon landing. This equipment will be recharged on the surface, allowing the crew again to recharge their EMUs just prior to launch for their return to the CM at the end of the lunar mission.

6.4 Avionics

Unlike the CM and PM1, the ADV will not carry GPS. In general, GPS is not useful beyond the NAVSTAR constellation (though on occasion, GPS signals can be acquired during cislunar transit). It will however, carry a new sensor not included on the CM and PM1. A Miniature Inertial Measurement Unit (MIMU) will provide 3 axis angular rate and velocity measurement (MIMU, 2001). For redundancy, three MIMUs will be carried onboard. MIMU is a lightweight sensor, drawing only 34 watts and massing only 4 kg (MIMU, 2001). The ADV will also use two star sensors, two horizon sensors, and six sun sensors to enhance its situational awareness. Like other LTV vehicles, the ADV will be equipped with three laser rangefinders at each docking port (six rangefinders total) for close range situational awareness during docking operations. Finally, the ADV will be equipped with two laser altimeters for altitude measurements. The ADV will use as its laser altimeter the same LIDAR unit used on the Clementine mission. The total mass for each LIDAR is 2.37 kg and the power required is 16.3 watts (Clementine LIDAR Performance, 2002 and Clementine HIRES Camera Performance, 2002) The LIDAR has a range of 640 km (Clementine Laser Rangefinder, 2002).

The autonomous navigation system used across LTV spacecraft will also be utilized on the ADV, integrating sensor data from the ADV's various sensors.

Three flight computers are carried onboard the ADV to house the flight software. As is the case with other LTV flight computers, each computer will contain multiple copies of all flight software and will utilize a wireless network.

6.5 Docking Systems

The ADV's two docking ports are located on the dorsal cabin surface and on the propulsion unit's side directly opposite the crew egress hatch (This side of the propulsion unit will be designated the forward side of the vehicle.). The dorsal docking port is used to dock with the Crew Module for crew transfer, while the forward docking port is used to dock with Fuel Tankers for vehicle refueling.

The dorsal port has a passive MDAS configuration while the forward port is an active-passive MDAS. The dorsal port contains a hatch used to facilitate crew transfer. The forward port contains fuel, power, and thermal fluid transfer conduits. When the ADV is docked to a FT, the FT can provide fuel, as well as limited power and thermal control.

6.6 Thermal Control

An active TCS will be used on the ADV to reject waste heat. The maximum thermal load for the ADV is equivalent to the vehicle maximum power level, which will be shown later in this chapter to be 2.350 kW. The ADV TCS is virtually identical to the PM1 configuration. While the ADV does have a cabin, it is depressurized for the majority of the time, making cabin air heat exchangers impractical. Consequently, a combination of cold plates and heat pipes are used. Plumbing and valves, instruments and controls, fluids, and a two-sided radiator complete the TCS and are sized in the same way as their counterparts on the CM and PM1. The total TCS mass, including radiators,

is 100 kg and the system requires 54 W. The radiator is divided into two square radiator wings, each measuring 1.85 m in width and height and 0.06 m in thickness. The radiators are mounted on the sides of the propulsion unit, each halfway between the crew egress ladder and the forward docking port.

6.7 Communications

The ADV communications system is exactly the same as the system used on PM1. Both are sized to communicate from lunar orbit to FTDRSS. The ADV will use the same size and mass U-band antennas used on PM1. It will also use an identical transmitter, operating at the same power levels. In all aspects, component for component, the ADV and PM1 communications systems are identical, with the one exception that the ADV only carries two antennas, where PM1 carries three.

6.8 Propulsion

The ADV's Spacecraft Landing System (SLS) and Attitude Control System (ACS) provide all propulsion for the vehicle. The SLS will consist of a single RS-72 engine and the ACS will consist of sixteen R-4D engines (Axis conventions are +X = forward [through the docking port], +Y = port, +Z = up, +roll = port radiator up, +pitch = forward docking port up, +yaw = forward docking port right.).

SLS Configuration

The SLS engine will be gimbaled, just like the PM1 engines, allowing for thrust vector control during landing. The gimbal mass is estimated using the same parametric used for PM1's RS-72. The single engine is mounted directly under the ADV center of mass.

SLS Performance

The first task of the SLS in a typical lunar mission is the successful deorbit and landing of the ADV (As will be explained later in this chapter, it must also capture into lunar orbit during its initial deployment. But this is a once in a vehicle lifetime engine burn and is not repeated during lunar missions.). An initial deorbit burn is followed by an extended powered descent. The ADV remains on the surface of the moon, powered down during the crew's lunar mission. Ascent involves powered ascent, followed by circularization. A 0.2 km/s Δv is also budgeted for LTV rendezvous phases, one prior to descent and one after ascent. Delta-v, vehicle mass, fuel mass, MMH mass, N2O4 mass, and burn time are summarized for each burn in table 6-1. It should also be noted that the fuel mass is the fuel consumed in the burn, which is not the total fuel onboard.

ACS Configuration

ACS thrusters will be mounted in four-thruster clusters reminiscent of the Apollo Lunar Module. While similar to the PM1 configuration, the thruster orientation is slightly different due to docking port and crew egress hatch considerations. The clusters will be mounted on the vehicle sides, encircling the vehicle center of mass along the propulsion unit's perimeter. One is at the forward starboard, forward port, aft starboard, and aft port. Each cluster has ±Z axis thrusters and outward firing thrusters in the X and Y axes. Engine numbering is shown in figure 6-2 and table 6-2.

Like the CM and PM1, the ADV will be capable of performing any X-axis translation or any yaw rotation with a two-engine burn. Yaw is also redundant for any single engine and certain two-engine failures with no loss in performance and no increase in fuel expenditure. Pure Y and Z-axis translation and roll and pitch rotation require a four-engine burn (Two-engine translation burns in these directions will produce a

rotational component.). Single or greater engine failures in Y or Z-axis translation or in roll or pitch rotation will require combinations of maneuvers in other axes to maintain flight capability in the failed axis. Attitude control thruster selection for each single axis maneuver is shown in table 6-3.

ACS Performance

Moments of inertia were estimated in the same manner as for the CM and PM1. Using the initial lunar orbit ADV mass of 21407 kg, the ADV moments of inertia are $I_{xx} = I_{yy} = 86219$, $I_{zz} = 37602$.

Because of the symmetry of the ADV's design, all thrusters have the same moment arm, hence the same torque: m moment arm and Nm torque. The ACS is designed to maintain a deadband of 10 degrees in roll, pitch, and yaw, just like the CM. Its maximum allowed angular velocities are slightly different, however, 0.033 degrees per second in roll, 0.033 deg/sec in pitch, and 0.033 degrees per second in yaw, again taking maximum advantage of the R-4D's minimum impulse bit, thus minimizing propellant consumption.

Docking, separation, and daily attitude control fuel requirements are determined in the same manner as for other LTV spacecraft. The ACS system requires roughly 32 kg of propellant, of which 12 kg are MMH and 32 kg are N_2O_4.

ADV Refueling

A successful ADV refueling must take place before a CM can be cleared to depart Earth orbit for a lunar mission. Chapter eight will provide more details with respect to the fueling process, but the ADV will require fueling visits from two Fuel Tankers to completely fuel the lander. The ADV fuel requirement is roughly 1.64 times the capacity

of a Fuel Tanker. Consequently, over the course of eight lunar missions, 14 FTs will be required to provide the ADV with the fuel it needs.

It should be noted that the ADV is only fueled in lunar orbit. This is because it saves mass, fuel, and expense to refuel in orbit rather than on the surface. Until the moon can produce its own fuel it is more cost effective to conduct fueling operations in space. The impact of this is that the ADV must receive power, thermal control, and attitude control while in orbit. The ADV will provide most of this support itself. However, by remaining docked to a FT between missions, the ADV can use FT resources for attitude control, as will be explained in chapter eight.

Tank Sizing

Because the ADV is only refueled between missions, it must carry its entire load of fuel. The craft requires 14,795 kg of propellant for its lunar landing and ascent mission. Like, PM1, the SLS and ACS share fuel tanks. Also like PM1, multiple tanks are used. In this case, the ADV tanks are identical in size to the APS tanks on the CM. Should PM1 experience a tank failure, fuel can be transferred from the ADV to PM1. The reverse is also true, but generally if there is an ADV failure, either a spare ADV will be used or the mission will be aborted. A crew would not land on the moon in a suspect vehicle.

The ADV will carry a total of eight fuel tanks, four MMH and four N_2O_4. It carries a maximum MMH load of 4935 kg and a maximum N_2O_4 load of 9860 kg. Like PM1, the ADV tanks are fully cross-linked.

6.9 Power

Initially, an all-battery configuration was chosen for the ADV, similar to the power system for the Apollo Lunar Module. However, the ADV mission is different from that of the Apollo LM in a manner that renders batteries inappropriate.

The problem with the batteries is that the ADV has a 30-hour lunar orbit period budgeted into the vehicle's flight profile and a 3.2-day transfer from LEO to lunar orbit. An extremely massive battery system would be required to keep the vehicle alive during these periods, even assuming a significantly reduced power profile for those times.

A possible alternative is a flywheel or fuel cell system. However, a fuel cell system would require resupply or an additional energy transfer system for reactant recovery (in the case of a regenerative fuel cell). This would have a significant, adverse effect on mission operations and program expense. A flywheel system would significantly increase ADV mass, thus requiring a greater propellant budget, again significantly, adversely impacting mission operations and program expense. The least expensive system is a solar array and battery system.

Consequently, the ADV will feature two retractable SLA triple junction solar array wings. The wings will provide power during the initial deployment to lunar orbit and while awaiting a mission in lunar orbit. The wings will retract for lunar landings and ascent. The same lithium polymer electrolyte batteries used throughout the Trailblazer LTV spacecraft will power the ADV during eclipse periods, landing, and ascent.

Solar arrays are sized in the same manner used for other LTV spacecraft. However, because the ADV will operate in the lunar environment, a dust factor is being added over and above conventional sizing estimates. It is assumed that the solar arrays

will experience 40% degradation in array performance due to lunar dust, micrometeorites, and debris impacts. Even assuming this degradation in array performance, the power system is lighter than that required for an exclusively battery powered vehicle. A battery-only system would require a battery mass of 234 kg, due to the need to provide battery power (at drastically reduced power levels) during cislunar transit. Even if this requirement were somehow avoided, the ADV would still require a battery mass of 294 kg, due to the 30-hour period it spends in lunar orbit rendezvousing with the CM/PM1. Using solar arrays instead, a battery mass of 26 kg and an array mass of 93 kg is required. (This includes the mass of the array drive system, which will also drive the radiator panels.)

ADV power levels will vary by flight phase, depending on which systems need to be powered for particular flight profiles. Table 6-4 will describe ADV power requirements by flight phase.

6.10 Mass Properties

Table 6-5 lists the final mass summary for the ADV. Like the other LTV spacecraft, a growth margin provides for mass impacts due to unforeseen additions to the vehicle systems. The Larson and Wertz (1992) structural mass parametric estimation of 21.06% dry mass is applied only to the portions of the vehicle located in the propulsion unit. The crew cabin structural mass is sized using the TransHab shell density given by Spexarth (2002). The two values are added for the total structural mass.

6.11 ELV Deployment

The ADV is launched on an Atlas V or Delta IV booster to LEO, where it awaits a PM2. The PM2 will transfer it directly to LLO, with the ADV firing its SLS engine to

capture into lunar orbit. It will immediately dock with a series of two Fuel Tankers to take on fuel for its lunar mission. It will remain docked to the second FT and will await the arrival of the CM/PM1 in that configuration.

Chapter Seven – Aeroshell Module

7.1 Background

Departing the moon following a lunar mission, the combined CM and PM1 will use aerocapture to be captured into Earth orbit. To conduct an aerocapture analysis, the entry environment must be determined, particularly the flight trajectory and entry heating. In order to achieve the required delta-v for orbital capture, the LTV must descend to the proper altitude. This atmospheric passage will generate significant thermal loads, partially as a function of altitude.

Once the entry environment has been established, a thermal protection system (TPS) can be developed. Depending on the heat loads, either ablative or non-ablative heat shields can be used. Given that lunar return will cause tremendous heating, it is suspected that an ablative system will be required. Unfortunately, such a system is non-reusable and massive, as compared with a non-ablative system. Preliminary estimates suggest the heat shield will cause the CM to exceed the mass capabilities of present day launch vehicles if it is flown integrated with the vehicle. Not only will existing rockets be unable to lift it into orbit, but also PM2 will be unable to place the CM on a trajectory to L1 (PM1 might also have the same problem as the CM.). Even if the mass were not a problem, an integrated, ablative TPS would create a need to extensively service the CM and PM1 between missions.

Consequently, a separate aerocapture module is required for the LTV. This module will rendezvous with the LTV during its inbound flight from the moon and will be discarded following aerocapture. AM rendezvous will be accomplished at L1. At the

Earth-Moon L1, the mated CM and PM1 will rendezvous and dock with a pre-deployed AM. PM1 will then fire its engines to place the LTV on an Earth intercept trajectory.

The purpose of this chapter is twofold: (1) to determine the entry environment experienced by an LTV experiencing aerocapture and (2) to size the Aerocapture Module. Thermal constraints regarding entry into earth orbit are critical elements in the sizing of this module, particularly in determining the appropriate TPS material and thickness, as well as the resulting TPS mass.

The design requirement to restrict launch vehicles to existing rockets makes lunar travel an extremely challenging problem. The area of aerocapture is no exception. A human spacecraft must pursue a relatively rapid transfer from the moon to Earth, eliminating options such as weak stability boundary, solar sails, and low thrust engines. Consequently, a high-thrust, impulsive transfer is required. This energy must be dissipated in order to be captured at Earth for either a direct entry or capture into orbit.

The Trailblazer concept will endeavor to avoid direct entry (i.e. Apollo) in order to avoid the costs associated with recovery and re-launch of the LTV. Consequently, initial priority will be given towards sizing the vehicle for capture into LEO. Two options are available: propulsive insertion and aerodynamic braking.

Propulsive insertion requires a delta-v of roughly 3.3 km/s and is simply too great for the Trailblazer's PM1. The only viable propulsion module capable of providing delta-v's anywhere in that vicinity is PM2, which is cryogenic and cannot be stored in space for the necessary periods of time. Consequently, propulsive insertion is not an option.

This leaves aerodynamic braking as an option. The inbound LTV must dive into Earth's atmosphere and use the resulting drag to slow down to an orbital velocity. This can be done in either of two fashions: aerobraking uses multiple passes through the atmosphere to slow down, while aerocapture accomplishes all deceleration in a single pass. Aerobraking is a time-intensive process, requiring a time span potentially on the order of a month or longer. This would expose the crew to too much radiation and would increase the life support consumables, driving the vehicle to an impractically large mass. Therefore, the thermally intense process of aerocapture is the preferred option because it reduces the mission duration for the flight crew.

Aerocapture has never been attempted, existing only in spacecraft conceptual design studies. Aerobraking has been used with two Mars probes and is planned for future interplanetary probes. No form of aerodynamic braking has ever been used to capture a human spacecraft into planetary orbit, making this perhaps the most crucial technology development area of the Trailblazer design. In the late eighties and early nineties, NASA initiated a flight test experiment called the Aeroassist Flight Experiment (AFE) that was intended to provide experimental data (Squire, 2002). Unfortunately, the project was cancelled before the vehicle flew.

7.2 Aerocapture Module Dimensional Restrictions

It is almost immediately obvious that the CM's thermal protection system is entirely inadequate to protect the vehicle from the thermal environment encountered in aerocapture from lunar orbit or L1. The thermal environment of aerocapture is much more severe than that of entry from LEO. A new system is required. Clearly, a massive thermal protection system is required to protect the LTV, given that both the CM and

PM1 must be protected by the TPS. The LTV TPS, if attached in a conventional fashion, will push the CM mass beyond PM2's payload capacity, as one might suspect from a casual glance at the delta-v data in chapter three and the PM2 performance data in chapter six. Due to the intense heating environment of aerocapture, the TPS would most likely be ablative and is consequently non-reusable. A conventional TPS attachment to the spaceframe would require extensive servicing between flights, requiring the LTV to land and be re-launched, significantly increasing the operational expense of the LTV. Consequently, a separate Aerocapture Module will be designed for the LTV. This module will rendezvous with the LTV during its inbound flight from the moon and will be discarded following aerocapture.

The size of the module is driven by a combination of aerodynamic considerations and the requirement to completely enclose the CM and PM1. The CM measures 9.14 meters in length, 4.42 meters in width and 3.2 meters in height. PM1 is estimated at 5.64 meters in length and 2.4 meters in both width and height. The module will therefore need a minimum internal clearance of 14.78 meters in length and 2.41 meters in radius.

Possible aeroshell shapes considered for this vehicle are the raked cone and the domed cylinder. Both shapes are reasonable in that they can be launched as a single piece (requiring no on-orbit assembly) and these shapes have been used in several existing aerocapture studies, thus providing data points for comparisons.

Because data in other studies showed lower heating rates for domed cylinders than for raked cones (Williams, Gietzel, Rochelle, and Curry, 1991), the Aeroshell Module will be a domed cylinder in shape, as shown in figure 7-1. It must allow for sufficient clearance for the LTV to enter it and dock. One additional constraint is that the

Aerocapture Module's mass must remain below 18,416 kg (including structure, any avionics, propellant and thrusters) or it will exceed PM2's payload capability for transfer from LEO to L1.

7.3 Aerocapture Module Flight Profile

The constraint of no new launch vehicles has forced the adoption of a highly modular strategy for the Trailblazer LTV. Because of this, the Aeroshell Module will pursue a different flight path from the rest of the LTV, such that AM rendezvous with the LTV takes place at the Earth-Moon L1.

Because the AM is an unmanned vehicle with no other constraints on its time in space, numerous alternative trajectory options can be employed to reach L1, including electric propulsion or weak stability boundary. If a slow transit method is utilized, then it must be pre-deployed sufficiently far in advance of the lunar mission that it does not delay the launch of other components that cannot leave Earth orbit until the AM is in place. This study will assume the use of a PM2 with Hohman transfers for the transfer from LEO to L1.

Following a lunar mission, a Trailblazer LTV (CM and PM1) will return to L1 from lunar orbit. At L1, the mated CM and PM1 will dock with a waiting AM. The LTV's PM1 will then place the vehicle stack on an aerocapture trajectory. Once atmospheric passage has been completed, the CM/PM1 will separate from the AM before performing a circularization burn. This will allow the used AM (with its perigee still inside the atmosphere) to execute a destructive reentry for disposal purposes.

7.4 Entry Environment

Flight Trajectory

An entry velocity can be estimated for preliminary design purposes by approximating an orbit with the correct energy (Carlise, 2002). This can be accomplished by assuming a perigee that just enters the Earth's atmosphere, an altitude of 100 km. The apogee is the Earth-Moon L1 point, a distance of roughly 346,069 km. Using such an orbit, the entry velocity is calculated at an altitude of 125 km. Using a simple two body orbit formula,

$$v = \sqrt{GM\left(\frac{2}{r} - \frac{1}{a}\right)}$$

the entry velocity is determined to be 10.97 km/s. Desautel has provided a means by which an approximate analytical solution can be obtained for perigee conditions (1985).

For a given entry velocity vector, his solution determines a Zeta function proportional to density divided by m/C_DA at perigee as a parametric function of the exit velocity vector and constant L/D. This Zeta function can then be used to determine perigee velocity as a parametric function of m/C_DA.

It is useful in preliminary design work such as this endeavor to be able to quickly and simply characterize the perigee Aerothermodynamic regime, based on initial and final orbits and vehicle properties. However, such a solution is not possible using classical analytical trajectory solutions.

Previous efforts, such as the Chapman Zeta function (Chapman, 1958) and Loh's unified trajectory solution (Loh, 1968) fail, however, to even predict the occurrence of perigee solutions for entry angles steeper than –2 degrees (Desautel, 1985).

Based on Vinh's derivation for exact three-dimensional entry equations of motion, (1980) Desautel derived the following Zeta function:

$$\left[\frac{1+k\gamma_i(L/D)_i}{15k\gamma_i}-\frac{1+k\gamma_f(L/D)_f}{15k\gamma_f}\right]Z_p=2\log\left(\frac{V_f}{V_i}\right),$$

where k is a weighting factor found to be 0.30 to 0.35. The perigee velocity can then be solved from:

$$\log\left(\frac{V_p}{V_i}\right)=\frac{1}{2}\left[\frac{1+k\gamma_i(L/D)_i}{15k\gamma_i}\right]Z_p$$

This velocity was determined to be 9.35 km/s. Using this perigee velocity and the heat flux engineering correlation for a sphere, a perigee density (to be used to determine altitude) can be estimated as indicated by Scott, Reid, Maraia, Li, and Derry (1985):

$$\dot{q}_{\max}\sqrt{R_N}=18300\rho_\infty^{1/2}\left(V_\infty/10^4\right)^{3.05}\left(W/cm^2\right)(m)^{1/2}$$

Using the maximum convective heat flux (calculated later in this paper) and the 9.35 km/s perigee velocity, a perigee density of 0.000069 kg/m^3 is obtained. Perigee altitude can then be obtained from the relation given in Griffin and French (1991):

$$\rho=\rho_{SL}e^{\left(-\beta^{-1}H\right)},$$

where ρ_{SL} is sea level density, H is altitude and β^{-1} is atmospheric scale height, resulting in a perigee altitude of 65.55 km.

Entry Heating

The previously mentioned change in velocity, from 10.97 km/s down to a perigee velocity of 9.35 km/s (the spacecraft will also lose additional velocity on its way out of the atmosphere) is accomplished solely through atmospheric braking. This generates a

tremendous level of heating. A percentage of this heating, dependent on aerodynamic shape and surface properties, is transmitted to the surface of the vehicle (Sherman, 1968). In order for the spacecraft to survive the inferno it creates, the heating environment must first be properly determined so that an appropriate thermal protection system can be designed.

Spacecraft heating results from the dissipation of the initial total energy primarily through two heat-transfer mechanisms: convection and radiation. In convective heating, the air is heated by passage through a strong bow shock in front of the vehicle and bathes the vehicle hull in a hot fluid stream. Radiative heating occurs when the air is hot enough to radiate significant thermal energy as well. Radiative heating is generally most important at entry speeds greater than 10 km/s, which is the flight regime of lunar transfer vehicles and other interplanetary spacecraft. Peak heating most often occurs in stagnation point regions on the spacecraft, generally the nose, leading edges, or other protrusions (Griffin and French, 1991).

Unfortunately, entry heating is an area where much work remains to be done. Various methods have been proposed to estimate the entry heating environment, but there is considerable disagreement in their predictions. Further complicating the problem, there is little flight data. Direct entry has only been conducted seven times (Apollo), aerobraking only twice (Mars probes), and aerocapture has never been attempted. Williams and Scott approximately agree with respect to convective heating, but differ substantially on the radiative heating to be expected from an Apollo-style capsule experiencing aerocapture (Scott, et al, 1985; Williams, Curry, Bouslog, and Rochelle,

1995). Entry heating analyses are considered to be an order-of-magnitude theory, useful for preliminary design but not for detailed work (Griffin and French, 1991).

Much of the entry heating analysis performed today is conducted using a number of proprietary computer codes. NASA-JSC utilizes the MINIVER program to calculate the initial approximation of convective heating rates for LTV entry trajectories. BLIMP then is used to compute the convective stagnation heating rate and QRAD is used to calculate the radiative heating. RIFSP is also used in the case of biconic aeroshells to calculate radiative heating rates (Williams, Gietzel, et al, 1991). In general, these codes are not available for external distribution (Curry, June 4, 2002). Consequently, other methods must be employed in this research to estimate the heating environment.

Convective Heating

Scott, et al (1985) utilized a number of trajectory simulations in order to develop a parametric estimate for the influence of the vehicle's configuration on heating. Their work indicates that the peak convective heat flux is most sensitive to m/C_DA and is represented by the following approximation:

$$\dot{q}_{\max}\sqrt{R_N} = 7.3\left(\frac{m}{C_D A}\right)^{0.467}\left(\frac{L}{D}\right)^{-0.242}\left(W/_{cm^2}\right)(m)^{1/2}$$

, where R_N is the vehicle nose radius in cm.

Before using this approximation for the Trailblazer heat shield, it is important to test its predictions against existing data. Williams, et al. determined convective and radiative heating data for three scaled versions of the Apollo command module – 1.0, 1.5, 2.5 scale (Williams, Curry, et al, 1995). In a separate paper, Williams performed the

same task for three domed cylinders (Williams, Gietzel, et al, 1991). His data can be compared to Scott's approximation.

While useful, Scott's approximation leaves something to be desired. Applied to the domed cylinders and scaled Apollo capsules, this approximation has an average percent error of 14.5%, clearly too great an error for preliminary design work.

Table 7-1 shows the heating results obtained by Williams, et. al (both Williams references) for various aeroshell configurations. Table 7-2 indicates the convective heating obtained by the approximations of Scott, et. al. for each of the vehicle configurations prepared by Williams and provides a percent error, assuming Williams' calculations to be the truth condition.

Clearly, the variation in disagreement with Williams' data makes it difficult to attach any confidence to Scott's parametric estimate. However, a process can be implemented to better correlate Scott's function with reality. Scott either over or underestimates the convective heating, producing a positive or negative delta.

The first step is to take the standard deviation and skew for the six deltas. In this case, it is 12.58 and 0.626, respectively. If $Delta_i$ is equal to the skew, where i indicates the particular vehicle in question, then the following formula determines the new convective heating:

$$q_{c_{new}} = q_{c_{old}} + \frac{Skew}{|Skew|} StdDeviation$$

If $Delta_i$ is not equal to the skew, then the following formula determines the new convective heating:

$$q_{c_{new}} = q_{c_{old}} - \frac{Skew}{|Skew|} StdDeviation$$

This calculation is performed for each of the six vehicles, thus improving the results of Scott's estimate. Iterating this process ten times for all six vehicles reduced the average percent error to 0.04%. This strategy provides a correction mechanism that can be applied to convective heating estimates for other vehicles. However, the correction is only valid for maximum convective heating estimates less than or equal to 81 W/cm^2. The corrected convective heating identified for the LTV aeroshell is 59.97 W/cm^2.

Radiative Heating

Between radiative and convective heating, radiative is clearly the less understood. Scott points out that there is a great deal of uncertainty in evaluating radiative heating, particularly in the ultraviolet region (Scott, et al, 1985). In addition to the contradictions in Williams' and Scott's methods, Gupta poses an equation of his own but warns that it is only an approximation to a very complex calculation that itself is in need of experimental confirmation, and hence should be used with caution (Gupta, Jones, and Rochelle, 1992). The atmosphere, when subjected to the shock wave of an entry vehicle, becomes an ionized, chemically reacting gas, not at equilibrium, with significant radiative energy transfer (Griffin and French, 1991). Radiative heating appears to be negligible for a vehicle entering at speeds on the order of 6 km/s and below, but at higher velocities it becomes significant (Williams, Gietzel, et al, 1991). At L1 or lunar return speeds, it cannot be ignored, and unfortunately, none of these methods appear to be particularly viable.

Lacking any reliable algorithm to estimate maximum radiative heating rate, a correlation was developed, based on the radiative heating values obtained by Williams for ten aeroshells (Williams, Gietzel, et al, 1991; Williams, Curry, et al, 1995). (This includes the six previously discussed, plus another four that did not include sufficient data in their reports to be used in the convective heating correlation.) For each aeroshell, the ratio of radiative to total heating was calculated and an average was taken of these ratios. Additionally, the aeroshell closest in configuration and performance to the LTV aeroshell was also identified. The maximum between the average ratio and the ratio of the aeroshell most similar to the LTV aeroshell was chosen as the ratio to use for calculations. This ratio was then used as a multiplier to obtain the LTV radiative heating estimate, which was determined to be 42.35 W/cm^2, thus giving a total maximum heating rate estimate of 102.32 W/cm^2 for the LTV. (In actuality, the radiative and convective maximums do not occur at the same time, though they are in approximately the same region of the flight profile. Summing both to obtain a total estimate allows for a conservative heat shield design.)

7.5 Thermal Protection Systems Overview

The role of the thermal protection system is, of course, to protect the vehicle from aerodynamic heating by either blocking, absorbing, or radiating the heat. Now that the heating rate has been estimated, it is possible to select a TPS material for the LTV. There are several kinds of TPS materials, the two most common of which being ablative and radiative types. Other TPS systems are heat-sink, transpiration and film cooling, and convective cooling.

The primary advantages of radiative systems are that they are passive and potentially may not require complete refurbishment between flights (Sherman, 1968). They are nearly independent of the total heat input but are limited by the material service temperatures. Unless the material is also a sufficient insulator, insulation materials may also be required beneath the TPS material. The space shuttle uses a variety of radiative systems for its entry protection.

Equally simple as radiative systems are heat-sink systems. Favorable aspects of these systems, used on Mercury and Gemini spacecraft, include their simplicity and reliability. They are relatively simple to analyze and design, and they undergo rises in temperature without melting, vaporizing, or chemically reacting. On the other hand, however, the materials are limited by total heat input and material temperature limits. Thus, their use is confined to low-ballistic coefficient vehicles and to relatively cool areas of lifting entry bodies where there is a low total heat input (Sherman, 1968).

Transpiration and film cooling systems are those where liquid or gaseous material is injected into the boundary layer. This reduces surface heat transfer by cooling and thickening the boundary layer. These systems are anticipated for use on surfaces subject to extremely high heating rates (Sherman, 1968). This is perhaps the most complex of all TPS systems and the most difficult to implement.

Convective systems remove heat from the inner surface of the TPS material, as opposed to (or in concert with) all other systems, which remove heat from the outer surface. This process is accomplished through the internal circulation of a fluid that absorbs heat through temperature rise and often through a phase change as well. If the fluid is a gas, it is dumped overboard. In the case of a multiple-fluid system, the

"primary" fluid(s) are recirculated and the "secondary" fluid(s) are vaporized and dumped overboard (Sherman, 1968).

The most prevalent thermal protection systems in actual use are ablative systems. In general, ablative systems combine the performance of a radiative heat shield with the heat blockage of a transpiration or film cooling system, absorbing heat energy in various phase-change processes. They are categorized as subliming, oxidizing, melting-vaporizing, or charring. Subliming ablators decompose directly from solid to gas. The material absorbs energy until the surface reaches the sublimation temperature, which is a function of local pressure. Energy is absorbed in the sublimation process and heat flux is reduced by the transpiration effect of the evolving gases. Oxidizing ablators are similar to subliming ablators, but they undergo oxidation during the process of sublimation, which provides an additional heat transfer path. Melting-vaporizing ablators melt at high heating rates, absorbing heat, and then vaporize, absorbing additional heat and providing transpiration heat blockage. However, if the surface shear or pressure gradient is large, the liquid layer may be removed before it vaporizes, reducing the ablative effectiveness. Charring ablator effectiveness is generally proportional to density, while its insulation effectiveness is inversely proportional to density. Consequently, to reduce density without sacrificing effectiveness, microballoons are often added. The microballoons are hollow spheres roughly 40 microns in diameter, often made of phenolic resins or glasss with a wall thickness of 1 to 2 microns. Because of the numerous energy-absorbing mechanisms employed in ablative thermal protection systems, it is difficult for theoretical models to precisely predict ablator performance (Sherman, 1968).

7.6 TPS Material Selection

The leading candidates for an LTV TPS are ablative and radiative systems. Ablative systems are generally more capable of withstanding the intense heating environment associated with planetary capture. However, they are non-reusable, a significant liability in any lunar transfer architecture. An analysis of available TPS materials in the context of the previously discussed entry environment will reveal suitable candidates.

Of critical interest is the surface temperature, which is identified (Bertin, 1994) by the formula:

$$T_w = \left(\frac{\dot{q}_{\max}}{1.06\sigma\varepsilon} \right)^{1/4}$$

This temperature and the maximum heating rate typically determine the material selected for the TPS. In the case of the LTV, a maximum surface temperature of 1812°C will be experienced at the maximum heating rate of 102.32 W/cm^2. These two parameters are so intense that they eliminate most TPS materials currently in use. Shuttle tile, for instance, is limited to a maximum heating rate of 45 W/cm^2 and a maximum temperature of 1470°C (Larson and Pranke, 1999).

It should be noted that the entire surface is not exposed to this heating rate. Consequently, it would be wasteful to design an entire aeroshell to these specifications. Programs such as MINIVER, BLIMP, and QRAD are used to determine the heating profile across the vehicle. Individual TPS material selections are made for regions of the vehicle surface. Generally, the maximum heating and temperature profiles apply to the vehicle leading edges, lower surface, and nose region.

Precluding the use of shuttle-era TPS materials, the intense temperatures and heating rates of lunar return have plagued many lunar studies, forcing designers either to revert to the considerably heavier Apollo-era ablators or to assume the development of a new class of materials. The studies conducted by Williams, mentioned earlier in the Convective Heating section of this paper, utilized both techniques. Apollo ablators were used in the scaled-Apollo studies (Williams, Curry, et al, 1995), while the domed cylinders discussed (Williams, Geitzel, 1991) assume development of new TPS materials.

The LTV requires an aeroshell that will accommodate a vehicle measuring roughly 16.2 meters in length, 4.4 meters in width, and 3.2 meters in height. Since one of the domed cylinders investigated by Williams is on this same order of scale, that type of structure is of particular interest in the development of the LTV. Williams' 57-degree angle of attack domed cylinder measures 19.8 meters in length, with a diameter of 8.53 meters (Williams, Geitzel, 1991). Since this model is clearly larger than the one required for the LTV, it is more than adequate in size to accommodate the LTV. Accordingly, an investigation regarding the compatibility of this model with the LTV design holds a great deal of merit.

Unfortunately, some of the TPS materials used in Williams' study do not exist as flight certified materials. In the early nineties, Lockheed proposed developmental activities for new ceramic TPS materials with higher temperature capabilities than those used for the shuttle (Curry, June 6, 2002). This effort was not funded and the materials were never developed. At the time, however, it appeared that these and other materials would be forthcoming and several proposed materials were used in design studies.

In Williams' study, Rigid Fibrous Ceramic (RFC) and HTP-6 are two such materials. Williams acknowledged that the materials were not flight certified, but indicated that it seemed reasonable that the materials would be developed within the next ten years (Williams, Geitzel, 1991). Unfortunately, it has been slightly more than ten years and there are no such materials.

RFC was intended to be a high performance version of FRCI-12. The assumption was that a new material, perhaps zirconium based, would be developed to have a similar density and thermophysical properties as FRCI-12, but be capable of operation at temperatures between 1483°C and 1927°C (Williams, Geitzel, 1991). HTP-6 was also an advanced ceramic material, with a density of 96.1 kg/m^3.

Of the two, RFC presents the more critical problem as it is the material intended to protect the surfaces exposed to the most severe heating environments. Without some currently existing thermal protection material to take the place of RFC, there can be no human lunar missions in the near future. Several materials, however, do fall within the performance range required and could be considered as replacements for RFC.

Avco 5026-39 was the ablator used for the Apollo Command Module. It is currently the only TPS material that has been used to protect humans from temperature extremes associated with planetary capture or entry. It has a density of 512 kg/m^3 and a thermal conductivity of 1.3759 (TPSX, 2002). It has no significant manufacturing limits, but its high density and thermal conductivity would result in a very heavy vehicle, most likely too massive for currently available propulsion options.

A slightly better perfomer, Phenolic Nylon has a density of 1201 kg/m^3 and a thermal conductivity of 0.1904 (Williams and Curry, 1992). Despite it's being a much

denser material, the thermal conductivity is significantly lower. Both the density and thermal conductivity, however, are still too high to provide a usable solution.

Acusil I is the thermal protection material on the forward heatshield of the METEOR recovery capsule for space microgravity experiments. It is a moderate-density, filled silicone syntactic foam in a phenolic-fiberglass honeycomb. Acusil I has a density of 480 kg/m^3 and a thermal conductivity of 0.11. It has excellent ablation and insulation performance, exhibiting no surface recession for convective heat fluxes up to 140 W/m^2. It also has the advantage of an Apollo-proven honeycomb design that allows applications in high shear and/or pressure gradient environments (TPSX, 2002).

SLA-561V has been used on Viking, Mars Trailblazer, Mars 98, Stardust, and is slated for use on Mars 2003. It has a density of 264 kg/m^3 and a thermal conductivity of 0.0592. It experiences no recession at heat fluxes below 70 W/cm^2. Between 70 to 170 W/cm^2, there is surface recession and melt. Above 170 W/cm^2, there is surface melt and rapid vaporization. It is also limited by a stagnation pressure limit of 0.25 atm. Above this pressure, the material exhibits spalling due to the high shear loads. It additionally, and perhaps more critically for this vehicle, is limited by a manufacturing thickness limit of 2.11 cm (Szalai, 2002).

Silicone Impregnated Reusable Ablator (SIRCA) is perhaps the most capable of the new TPS materials developed at NASA-Ames. It was used on the back of the Mars Pathfinder, the forebody of the Deep Space II probes, and is currently selected to be used on the back of Mars 2003 (Szalai, 2002). SIRCA 15F has a density of 240 kg/m^3 and a thermal conductivity of 0.059 (TPSX, 2002). SIRCA is somewhat of a blend between radiative and ablative TPS materials. It is composed of an ablative silicone infiltrated

into a ceramic (shuttle tile) substrate (Szalai, 2002). SIRCA typically does not recede at heat fluxes less than 150 W/cm^2. A conversion process creates a thin, strong char layer that re-radiates most of the heat away from the material surface (Szalai, 2002). As a result, under certain conditions, SIRCA is reusable. It is made in billets measuring roughly 13" x 13" x 5" and machined to the desired tile shape.

While the nonexistent HTP-6 is a lower temperature material and does not present the same level of urgency as RFC, it still must be replaced if the Williams domed cylinder is to be incorporated into the LTV. While virtually any existing TPS material of equal or superior thermophysical performance to HTP-6 could be used, it is best to consider the one that will produce the lowest mass impact. Three TPS materials in particular, AETB-12, FRCI-12, and LI-2200, offer similar performance to HTP-6.

AETB-12 is a relatively low density, low thermal conductivity TPS material. It was flown on the shuttle as an experimental material on the top of the body flap. It has a density of 192 kg/m^3 and a thermal conductivity of 0.06 (TPSX, 2002). FRCI-12 is a relatively low density, low thermal conductivity TPS material that is substantially stronger than LI-900 and equivalent in strength to LI-2200 at a lower density. It has been flying on the shuttle since its adoption shortly after the shuttle *Challenger* was built. It has a density of 192 kg/m^3 and a thermal conductivity of 0.08 (TPSX, 2002). LI-2200 is a relatively high density, high thermal conductivity TPS material. It is currently flying on all orbiters, but to a very limited extent due to its weight. It has a density of 352 kg/m^3 and a thermal conductivity of 0.23 (TPSX, 2002).

Having surveyed candidate materials to replace RFC and HTP-6, it is now possible to select replacements. Offering slightly better material properties than SLA-

561V and significantly better material properties than any of the other ablators, SIRCA 15F is the ideal selection to replace RFC for the LTV AM TPS. Similarly, AETB-12 is the best candidate to replace HTP-6. Interestingly enough, SIRCA 15F and AETB-12 provide better performance than RFC and HTP-6, suggesting that the LTV aeroshell may require slightly less TPS material than assumed in the Williams aeroshell.

7.7 TPS Sizing

Once TPS materials have been identified, the next step is to size those materials. The surface area has already been constrained by the decision to use Williams' domed cylinder. The thickness, however, must now be determined.

The peak surface heat rate is used to pick the material type; then the heat load is used to determine the TPS thickness (Kowal, 2002). The thickness of any TPS material is driven by heat soak from the surface down to the sub-structure (i.e. the vehicle frame). A higher heat load generally implies thicker TPS (Cerimele, July 2002). All of the energy absorbed by the vehicle during atmospheric passage must be either rejected or stored by the TPS (Squire, 2002). The temperature limits of the vehicle frame or the binding agent (between the TPS material and the frame) limit how much heat is allowed to soak through and be stored by the vehicle interior (Cerimele, July 2002). The peak temperatures for the TPS adhesive and vehicle structure determine the maximum temperature at the TPS inner surface. The peak surface heat rate determines the maximum temperature at the TPS outer surface. Finally, using the heat load and these two temperatures, the thickness is varied until these limits are not violated (Kowal, 2002). As an approximation, a simple steady-state, one-dimension heat conduction equation is used (Larson and Wertz, 1992):

$\dot{q} = \left(kA/\Delta x\right)(T_1 - T_2)$, where $\dot{q}$ is the total heat transfer rate in watts, k is the thermal conductivity, A is the cross-sectional area normal to the heat transfer area in m^2, Δx is the material thickness in meters, and T_1 and T_2 are the temperatures at the material inner and outer surfaces in degrees Kelvin.

This equation is used to determine the heat shield thickness for the SIRCA 15F portion of the aeroshell. T_2 is constrained to be 450.15 K by material limitations of the vehicle structure. T_1 is the surface temperature T_W and is thus determined by the heat rate. A is the surface area of the vehicle to be covered with SIRCA 15F and k is the thermal conductivity for SIRCA 15F. Using the maximum heat transfer rate as the worst-case scenario and solving for Δx, a material thickness of 2.10 cm is obtained.

Because $\dot{q}$ and T_1 for the sections of the domed cylinder shielded by HTP-6 are not reported in Williams' study and cannot be estimated with available parametric equations, an alternate method will estimate the thickness for AETB-12. Assuming that AETB-12 will protect from roughly the same heat profile that HTP-6 was intended to shield, the heat conduction equation can be set equal to itself for both HTP-6 and AETB-12.

$$\left(\frac{k_{HTP-6}A}{\Delta x_{HTP-6}}\right)(T_1 - T_2) = \dot{q} = \left(\frac{k_{AETB-12}A}{\Delta x_{AETB-12}}\right)(T_1 - T_2)$$

Canceling equal terms gives:

$$\frac{k_{HTP-6}}{\Delta x_{HTP-6}} = \frac{k_{AETB-12}}{\Delta x_{AETB-12}}$$

Solving for the AETB-12 thickness yields:

$$\Delta x_{AETB-12} = \frac{k_{AETB-12}\Delta x_{HTP-6}}{k_{HTP-6}}$$

The mass is then determined by multiplying this thickness by the surface area previously occupied by HTP-6 and the density of AETB-12. Given an HTP-6 thickness of 2.45 cm, this results in an AETB-12 thickness of 0.73 cm and a mass of 20.11 kg.

Finally, because the LTV flight profile is relatively similar to that in Williams' study, the sections of the domed cylinder containing LI-900 and FRSI will be assumed to experience the same heating predicted by Williams and will thus require no changes to their configuration. The parameters of 227.36 kg for LI-900 and 191.55 kg for FRSI will remain.

7.8 TPS Structure

Beneath the TPS material, a structure is required to absorb the loads generated by aerodynamic forces. The structural configuration used by Williams – and also assumed for the Aeroshell Module – is a lightweight honeycomb composite consisting of graphite epoxy face sheets with a NOMEX paper honeycomb core. The face sheets are 0.4064 mm thick and they sandwich a 3.81cm honeycomb core. The structure has a maximum use temperature of 177°C and a 1.4 factor of safety (Williams, Gietzel, et al 1991).

The structural weight (consisting of the aeroshell and rings, stringers and stiffeners) is often a significant percentage of the total vehicle mass and is generally heavier than the TPS material itself. Williams describes a parametric relationship between the total vehicle weight, structural weight, and TPS weight, termed TPS penalty factors (Williams, Gietzel, et al 1991). These penalty factors are as follows:

$$\eta_T = \frac{100 TPSWeight}{TotalVehicleWeight}$$

$$\eta_S = \frac{100 StructuralWeight}{TotalVehicleWeight}$$

$$\eta_{TS} = \eta_T + \eta_S$$

In Williams' study, his 57-degree angle of attack domed cylinder obtained a η_T of 6 and a η_S of 9, resulting in a TPS mass of 1790 kg and a structural mass of 2685 kg (Williams, Gietzel, et al 1991). As was seen in the previous section, the Aeroshell Module has a slightly lighter TPS, resulting in an Aeroshell Module η_T of 5.2. This decreased mass should translate into a lower required mass for the vehicle structure. However, as a conservative estimate, the Williams η_S of 9 will be retained, resulting in an overall η_{TS} of 14.2 and a structural mass of 2685 kg for the Aeroshell Module.

7.9 Systems Sizing and Mass Properties

Like all of the other components of the Trailblazer LTV, the Aeroshell Module must function on its own as a complete spacecraft during some portions of its mission. Consequently, it cannot simply be TPS material, adhesive, and structure, but must contain a full suite of spacecraft systems. Ensuring commonality across the LTV, where possible the AM will use systems also employed aboard the X-38 CM and PM1.

Avionics

The AM avionics will ensure that the vehicle will be capable of proper guidance, navigation and control in LEO, en route to L1, and at L1. Two flight computers will provide redundant computational capabilities for the module. Autonomous attitude determination will be attained with two star trackers. A single GPS unit will provide

state vector information while the AM is in LEO. In the event of a failure, ground tracking can still uplink state vectors that can be propagated by the onboard software. Four GPS antennas will allow the GPS system to also perform attitude determination, thus providing a backup system to the star trackers, as well as a means to use star tracker data to verify GPS performance. Six laser rangefinders will be used in conjunction with the docking systems. Video cameras on the AM exterior and interior surfaces, along with lighting on the AM interior, will provide video feeds to the Crew Module, allowing crew to look outside the CM when docked to the CM. Miniature cameras can provide acceptable video quality with minimal power requirements. A combination of low wattage lights and reflected sunlight can illuminate the AM interior.

Communications

The communications system is responsible for providing telemetry between the AM and Mission Control at distances ranging from LEO to L1. It will also communicate with the LTV, which can be in LLO, or at any point between LLO and L1. It is also responsible for taking over for the PM1 communications system when the LTV is inside the AM. As such, it must support the PM1's communications data rate of 12 Mbps. The most demanding communications link will be that between the AM and Earth, when the AM is at L1, roughly 346,000 km. To meet this requirement, the AM will be equipped with two 0.779-meter antennas and two redundant transmitters. The antennas will deploy from the aft end of the aeroshell, positioned on opposite sides of the opening such that a communications line of sight can be maintained regardless of vehicle orientation.

Propulsion

Similar to the other LTV modules, the AM uses sixteen R4-D engines (R-4D, 2002) for its reaction control system and L1 capture. All engines are hypergolic, using

monomethyl hydrazine for the fuel and nitrogen tetroxide for the oxidizer. The AM carries 1422 kg of fuel and its tanks mass approximately 176 kg. RCS thruster engine numbering is shown in table 7-3 and figure 7-2. Unlike other LTV spacecraft, the AM does not have a main engine – its RCS thrusters provide L1 capture. It is capable of performing any roll, pitch, or yaw rotation and any X-axis translation with a two-engine burn. It will not nominally perform Y or Z-axis translations. Roll, pitch, yaw, and +X translation are redundant for any single engine and certain two-engine failures with no loss in performance and no increase in fuel expenditure. In the case of other failures, or a need to perform a Y or Z-axis translation, other rotation and translation maneuvers can be accomplished with a combination of maneuvers in remaining axes. The AM also has "Fast" and "Entry" maneuver modes. The Fast mode utilizes three or four-engine burns to shorten burn times in circumstances where it is desirable to maneuver faster than in the nominal case. The Entry mode uses two or three-engine burns to maximize vehicle maneuverability during entry. Table 7-4 shows RCS thruster selection for each single axis maneuver.

Cylinder approximations were used to estimate the AM moments of inertia, such that $I_{XX} = MR^2$, $I_{YY} = I_{ZZ} = MR^2/2 + ML^2/12$. When the CM and PM1 are docked to the AM, the vehicle moment of inertia is the sum of the AM, CM, and PM1 moments of inertia. The AM-only moments of inertia are $I_{XX} = 149219$, $I_{YY} = I_{ZZ} = 342880$ and the docked moments of inertia are $I_{XX} = 274052$, $I_{YY} = 499278$, and $I_{ZZ} = 588258$.

Depending on thruster location, AM thrusters have moment arms of 9.9 or 4.3 meters and torques of 9707 and 4180 Nm respectively. The AM is designed to maintain a deadband of 10 degrees in roll, pitch, and yaw. Its maximum allowed angular velocities

are 0.015 degrees per second in roll, 0.009 degrees per second in pitch, and 0.016 degrees per second in yaw.

There are no fuel requirements for dockings and separations due to the use of the magnetic docking system described in the next section. Daily attitude control, L1 stationkeeping, and L1 capture fuel mass requirements are sized in the same manner as for other LTV spacecraft. Aerocapture fuel requirements are sized assuming continuous thrusting throughout the 500-second atmospheric passage and assuming a seven-engine burn, indicating thrusting in all three axes. The AM has a total fuel requirement of 1422 kg, of which 466 kg is MMH and 956 kg is N_2O_4. The AM does not refuel during the course of a lunar expedition.

Propellant tanks are sized in the same manner as for other LTV spacecraft. The AM uses four MMH tanks and four N_2O_4 tanks, with each set positioned next to one of the engine clusters. Each MMH tank masses 14 kg and each N_2O_4 tank masses 30 kg.

Docking

In order to dock to the Aeroshell Module, the LTV CM/PM1 stack must enter the module and secure itself to two Androgynous Peripheral Assembling System docking mounts. To avoid propulsive firings inside the AM, a somewhat modified version of the Magnetic Docking Aid System (Schneider, Nagy, Schliesing, 1996) used across the LTV modules will be employed.

The AM will be equipped with two passive APAS docking mechanisms, one located on its upper forward interior to mate with the CM's dorsal active APAS and one located on the lower aft interior to mate with PM1's ventral active APAS. Each AM APAS will be augmented with MDAS steel plates in order to receive electromagnets

from the MDAS systems onboard each LTV module. Each APAS requires 116 W of power during the docking phase (Patrick, 2002).

In addition to this standard MDAS configuration, a magnetic guide system (MGS) will be employed to position the LTV inside the AM. This MGS will consist of two guide rings mounted on a cable/winch system running along the interior wall of the LTV. The forward ring will be capable of traversing the distance between the forward and aft APAS mechanisms. The aft ring will traverse the distance between the aft APAS and the aft of the AM. Each ring will be capable of 360-degree-roll rotation. Each will also be equipped with three MDAS-derived extendible booms with an electromagnet and a laser rangefinder on each boom. Each electromagnet will be capable of exerting a 2025N holding force (Dura Magnetics, 2002).

Figures 7-3 to 7-6 show a graphical sequence of the LTV docking with the AM. The "star" symbols on the LTV represent the locations of steel plates that the AM electromagnets will capture. Figure 7-3 shows the LTV at close approach to the AM. At this point, final thrust burns from the LTV and AM RCS systems will neutralize any angular rates between the two vehicles and establish a slow rate of closure.

Figure 7-4 shows the LTV after it has begun to enter the AM. At this point, the two guide rings have captured the LTV and are slowly drawing the LTV into the AM. The rings will also rotate the LTV to correct any roll error, while the extendible booms on the rings will correct any pitch or yaw errors.

Figure 7-5 shows the AM and LTV after the guide rings have nearly completed positioning the LTV within the AM. At this point, it can be seen that the APAS docking mounts of both the CM and PM1 are about in line with the AM's APAS docking mounts.

The laser rangefinders on the LTV will begin to communicate any small position errors, which will be nullified by the extendible booms on the MGS.

Figure 7-6 shows the final docked configuration. Having completed their task, the guide ring electromagnets and extendible booms are deactivated. As the final step, the MDAS electromagnets and extendible booms on the LTV will activate, nullifying any remaining position errors and attaching themselves to the steel plates on the AM's passive APAS docking ports. The APAS ports will then secure themselves to each other and the docking clamps will secure. It should be noted that the APAS docking mounts are attached to variable height platforms that will adjust as needed in order for the docking mounts to be able to complete their attachment.

Power

As is the case with the other LTV modules, triple junction solar arrays and lithium polymer electrolyte batteries will supply power. A single 13 square meter array will provide 1.97 kW of power and will mass roughly 22 kg. The array drive mechanism masses 4 kg. Batteries to power the vehicle during 36-minute eclipses in LEO will mass roughly 3 kg. The batteries will only rarely be needed after the LTV departs for L1, but may be needed on occasion, during periods where the Earth or moon eclipses the sun. The array will be mounted on a mast that deploys from the aft of the vehicle to track the sun's position. Sun sensors on the array drive system will orient the array with respect to the sun.

Because the Aeroshell Module will contain the LTV inside it during the three-day flight from L1 to atmospheric interface, the LTV's solar arrays will be useless during this

period. Consequently, the AM will contain a disposable solar array measuring 57 m^2 and massing 67 kg to provide power.

The array will be jettisoned at atmospheric entry and will burn up in the Earth's atmosphere. The AM's primary array is not disposed along with this array because it is needed after aerocapture to power AM systems in preparation for its disposal maneuver. It instead retracts inside the AM prior to atmospheric entry and redeploys following LTV departure.

Thermal

Like the power system, the AM thermal system consists of a primary active thermal control system to handle AM thermal control and a supplemental radiator wing to shed excess heat generated by the LTV during the inbound flight from L1 to the onset of aerocapture. Because the AM is not reused, the thermal system does not attempt to control the heat soak resulting from atmospheric passage.

A simple, fully redundant TCS flow loop consisting of cold plates, heat pipes, pump and radiator – similar in configuration to those on other LTV modules – will be used on the Aerocapture Module. The system will draw roughly 45 W and will accommodate a 1.97 kW heat rejection requirement. The most demanding flight phase in terms of radiator size is LEO, where a heat rejection of 104 W/m^2 combined with a slightly higher power load (due to avionics used only in LEO) will result in a radiator size of 9.45 m^2, assuming two-sided radiators.

The supplemental radiator wing, measuring 16.94 m^2, will deploy from the ventral aft of the AM while the primary radiator wing will deploy from the dorsal aft. Both wings can be tracked to ensure that radiator surfaces are always parallel to incoming solar

radiation. The primary wing will be stowed prior to atmospheric passage, while the supplemental wing will be severed and discarded shortly before the vehicle enters Earth's atmosphere.

Ballast

As previously stated, the Williams 57-degree angle of attack aeroshell (Williams, Gietzel, 1991) will be used as the baseline for the LTV Aeroshell Module. However, in order to take advantage of the relevant portions of thermal analysis data, the AM must perform aerocapture with exactly the same mass that Williams used. Because of changes made to satisfy LTV criteria, the mass is not the same. Fortunately, the LTV AM is lighter and the difference can be made up with ballast. This mass delta also provides a measure of margin if some mass estimates should prove to be too small.

At present, there is approximately a 352 kg difference between the LTV AM and the Williams domed cylinder. Options for the use of this potential cargo capability include reserve fuel (for post-aerocapture maneuvering) and/or batteries, heat sinks, or additional TPS material, thus giving the AM capabilities beyond its design trajectory. However, because design uncertainties may easily cause this delta to fluctuate, or even vanish altogether, no conceptual design elements for the LTV will assume use of this mass capability.

Mass Properties

AM Systems Mass Summary

Table 7-5 provides a summary of the Aeroshell Module's systems and their masses. A small growth margin is included to account for any growth in vehicle systems.

Total Vehicle Mass Summaries

Vehicle masses vary significantly at various points along the AM's flight profile because elements are added to, or removed from, the module. The AM has essentially five mass configurations.

The first configuration encompasses the flight regimes of Earth launch, LEO, and outbound flight to L1. At this point the vehicle masses 9,025 kg, consisting of the structure, TPS, spacecraft systems, LTV support systems (thermal and power), and all propellant.

In the second configuration, L1, the vehicle has dropped 813 kg of propellant in the L1 arrival maneuver and is down to a mass of 8,193 kg. At L1, it will lose anywhere from negligible amounts of propellant up to a maximum estimate of 32 kg, depending on how long it remains at L1 and how close to the actual L1 point the AM can hold its position.

In its inbound configuration (returning to Earth from L1), the vehicle sees a massive jump in mass to 36,821 kg and falls to 30,607 kg, because it is carrying the LTV, consisting of the CM and PM1. The mass delta is due to the propellant expended by PM1 in the departure burn from L1.

For aerocapture, the mass drops to 29,837 kg as the AM discards the LTV support solar array and radiator in order to meet the mass specifications of the Williams (Williams, Gietzel, 1991) study. The vehicle will maintain this mass throughout the aerocapture maneuver.

In its final configuration, post-aerocapture, the vehicle masses 7,391 kg, having separated from the LTV. Other than minor deltas due to RCS thruster firings, it will

maintain this mass until it breaks apart and is destroyed in the Earth's atmosphere during its second atmospheric pass.

7.10 Aeroshell Deployment

Earth Launch

The Aeroshell Module will be lifted from the Earth's surface by expendable launch vehicles only. A potential complication is due to the fact that the aeroshell diameter is roughly 2.5 times larger than the maximum payload shroud diameter for any launch vehicle in the Atlas and Delta launch vehicle families (Delta III, Delta IV Payload Planners Guides, 200; Atlas Launch System Mission Planner's Guide, 2001, Atlas Launch System Mission Planner's Guide Atlas V Addendum,. 1999). In terms of mass, the Delta III, Delta IV Heavy, Atlas III, and Atlas V Heavy can all lift the Aeroshell Module to its target orbit of 407 km. However, this increased diameter will have adverse performance impacts on any vehicle attempting to lift the module into orbit, due to increased drag associated with the greater diameter. Because the module is near the performance limits of the Atlas III and Delta III, it would be a conservative assumption to assume those boosters will be unable to place the module in orbit. However, even with degraded performance due to increased drag, the Delta IV and Atlas V should have no problem lifting the Aeroshell Module into LEO. Consequently, the baseline assumption will be the use of Delta IV and Atlas V vehicles to place Aeroshell Modules in LEO.

Trans L1 Injection

LEO is not the destination for the Aeroshell Module. It will spend the majority of its time at L1, where it will await its intended LTV. The AM will be boosted from LEO to L1 by a PM2. A second Delta IV or Atlas V ELV will place the PM2 into LEO, where it can then dock with the AM. The docking will use an MDAS-augmented APAS

docking mount on PM2's forward ventral surface to dock with the AM's aft APAS. The AM's aft Guide Ring will be used to position PM2 for this docking (Alternately, depending on final masses and the impact of drag on Atlas performance, it may be possible for the AM's PM2 to be launched already mated to the AM on an Atlas V 500 with five strap on boosters. This will be discussed further in chapter eleven, as cost drivers are critical for making the final selection.). The PM2-AM stack will then depart LEO. The AM will separate from PM2 upon Centaur burnout and continue to L1 alone.

L1 Stationkeeping

The AM will propulsively capture into position at L1 (requiring roughly 752 kg of propellant). The craft will then hold its position at L1, awaiting a CM/PM1 stack needing its services for the return leg from L1 to LEO following a lunar mission. The AM will be able to stationkeep at L1 for up to a year. As indicated in Chapter 3, stationkeeping at L1 is not a particularly fuel-intensive maneuver and can be conducted for extended periods of time with only minor fuel expenditures. A Lissajous orbit with a 2840.6 km radius will be used as a worst-case baseline. This is clearly much greater than any desirable orbital radius. Such an orbit requires a delta-v of only 36.104 m/s per year to maintain. This translates to roughly 15 kg of propellant every six months, a virtually negligible amount.

Aeroshell Module Redundancy

Due to the criticality of the Aeroshell Module, a minimum of two operational AMs must be present at L1 before a CM can be cleared to depart LEO for a lunar mission. In the event that any failure renders the primary module unusable, the second module will serve as a backup (This backup module will become the primary module for the next lunar mission if it is not used during the current mission.). Each module is sized

to spend up to a year at L1, assuming worst-case stationkeeping Δv requirements, so there is considerable flexibility in leaving modules in position as backups.

Aeroshell Module Disposal

The Aeroshell Module is not reusable and is discarded following each lunar mission. Upon exiting the atmosphere (following an aerocapture maneuver), the LTV will exit the AM. After reaching an acceptable separation distance, PM1 will fire its engines to place the LTV in a circular orbit. The AM, however, will still be in an elliptical orbit with a perigee inside the atmosphere. It will be destroyed during its second atmospheric pass by rotating to expose its open aft section to the velocity vector, resulting in the vehicle breaking apart and burning up in the atmosphere.

Chapter Eight – Fuel Tanker

8.1 Overview

Like all of the other components of the Trailblazer LTV, the Fuel Tanker must function on its own as a complete spacecraft. Ensuring commonality across the LTV, where possible the FT will use systems also employed aboard other Trailblazer spacecraft. In many aspects, the FT is simply a tanker version of PM1.

8.2 Fuel Tanker Missions

Without a steady supply of fuel, the LTV can go nowhere. The Fuel Tanker, shown in figure 8-1, is the primary logistical link in the Trailblazer LTV concept and it represents a key technology development area for the Trailblazer program. Currently, only Russia is capable of orbital spacecraft refueling, using their Progress spacecraft. While the United States did successfully conduct an orbital refueling system flight demonstration experiment aboard the space shuttle *Challenger* in 1984, it does not have an operational capability (MICREX, 2002). Approximately six FTs will be used during each lunar expedition for five refueling missions.

Low Lunar Orbit Refuel Mission 1 (FT-M1)

The first refueling mission of every lunar expedition involves the ADV, which will be in a polar low lunar orbit. Depending on the expedition number, one or two FTs will also be sent to lunar orbit to fuel the ADV, giving it enough fuel to land and then return to orbit following a surface mission. Technically, the ADV requires the capacity of 1.64 FTs. Consequently, for expeditions with multiple FTs sent to refuel the ADV, the second FT (FT-M1b) will remain in lunar orbit and will provide fuel for the next lunar expedition. Assuming the planned eight Trailblazer mission, a total of 14 FTs are

required for ADV fueling. This mission must be successfully completed before there is any point in attempting the remainder of flights involved in a lunar expedition.

LEO Refuel Mission (FT-M2)

For the next refueling step in support of a lunar expedition, the FT will be called upon to fuel the Crew Module and Propulsion Module 1 in LEO. The two modules will be in the docked LTV configuration at an altitude of 407 km and a 28.5-degree inclination. A single FT is required for this purpose. The same shuttle that delivers the Trailblazer crew to the CM later recovers the FT. The FT is serviced and re-launched for subsequent missions.

Outbound L1 Refuel Mission (FT-M3)

CM and PM1 will travel separately to L1 and both will exhaust their propellant tanks capturing themselves at L1. CM will not be refueled at this point. PM1, however, will require fuel. A pre-deployed FT will provide PM1 with enough fuel to move itself and CM from L1 to lunar orbit. Lacking any ability to return the FT to Earth for servicing, the FT is discarded following this mission by directing it into a path that will eventually impact the lunar surface.

Low Lunar Orbit Refuel Mission 2 (FT-M4)

Having exhausted its fuel again by capturing it and the CM into lunar orbit, PM1 will again require fuel. The FT will provide it with enough fuel to travel from lunar orbit back to L1. Lacking any ability to return the FT to Earth for servicing, the FT is discarded following this mission by impacting it into the lunar surface.

Inbound L1 Refuel Mission (FT-M5)

Another pre-deployed FT will rendezvous with the lunar transfer vehicle at L1 during the LTV's inbound trajectory, docking to PM1 prior to the LTV's docking with the Aeroshell Module. The FT will provide PM1 with sufficient fuel to push the

CM/PM1/AM stack from L1 into an aerocapture trajectory, as well as the fuel PM1 will need to circularize the orbit for the CM/PM1 stack following atmospheric passage. It will also fuel the CM, providing it the fuel it may need for a contingency deorbit burn. Lacking any ability to return the FT to Earth for servicing, the FT is discarded following this mission by directing it into a path that will eventually impact the lunar surface.

8.3 Avionics

Like most of the Trailblazer LTV spacecraft, the FT uses the SIGI GPS. Two units are installed onboard each FT. Beyond LEO, the INS portion of the SIGI is used for inertial measurement. The FT also carries two star sensors, two horizon sensors, six sun sensors, and three laser rangefinders (on the FT's single docking port). The autonomous navigation system used across LTV spacecraft will also be utilized on the ADV, integrating sensor data from the ADV's various sensors. Three flight computers are carried onboard the ADV to house the flight software. As is the case with other LTV flight computers, each computer will contain multiple copies of all flight software and will utilize a wireless network.

8.4 Docking

The FT is equipped with a single docking port mounted on the front of the vehicle. The port uses an active-passive MDAS-augmented APAS mount. It is equipped for fuel, thermal fluid, and power transfer to vehicles it docks with.

The FT is designed to be capable of docking with the CM, PM1, ADV, PM2, and another FT. The MDAS is passive for docking with CM, PM1, and ADV. It is active for dockings with PM2. When two FTs dock, one vehicle will be active and the other will be passive. The FT is not designed to dock with the AM.

In an emergency situation, however, a FT can serve the CM as a surrogate PM1, propelling the CM between LLO and L1. In such a case, the AM will capture the CM as normal, but the FT will separate before the AM draws the CM inside. After aerocapture, the CM can either use its APS engine to circularize its orbit or it can go ahead and perform an entry and landing.

8.5 Thermal

An active TCS will be used on the FT to reject waste heat. The maximum thermal load for the FT is equivalent to the vehicle maximum power level, which will be shown later in this chapter to be 1.25 kW. The FT TCS is virtually identical to the PM1 and ADV configurations. Like PM1, the FT does not have a cabin, making cabin air heat exchangers unusable. Consequently, a combination of cold plates and heat pipes are used. Plumbing and valves, instruments and controls, fluids, and a two-sided radiator complete the TCS and are sized in the same way as their counterparts on other LTV spacecraft. The total TCS mass, including radiators, is 140 kg and the system requires 29 W. The radiator is divided into two rectangular radiator wings, each measuring 1.86 m in width, 2.72 m in length, and 0.06 m in thickness. The radiators are mounted on the underside of the solar array wings, perpendicular to the array surface, such that the radiators are always in the shade when the solar arrays are tracking the sun.

8.6 Communications

The FT communications system is identical to the system used on the ADV, which is virtually the same as the PM1 communications system. It is sized to communicate from lunar orbit to FTDRSS. The FT uses the same size and mass U-band antennas used on PM1 and the ADV. It will also use an identical transmitter, operating at

the same power levels. In all aspects, component for component, the FT and ADV communications systems are identical.

8.7 Propulsion

The FT propulsion system is composed of the Main Propulsion System (MPS) and the Attitude Control System (ACS). The MPS consists of a single RS-72 engine and the ACS consists of sixteen R-4D engines. Axis conventions are the same as for the ADV and other LTV spacecraft.

MPS Configuration

The MPS engine will be gimbaled, just like the PM1 and ADV engines, allowing for thrust vector control during burns. The gimbal mass is estimated using the same parametric used with the other spacecraft. The single engine is mounted directly along the FT center of mass.

MPS Performance

The MPS is generally used for a single burn to capture into its destination, whether LLO or L1. The MPS is not fired during missions to LEO. However, LEO FTs are recovered by the shuttle and returned to Earth for servicing. They are launched again on missions beyond LEO where the MPS is used. Table 8-1 details Delta-v, vehicle mass, fuel mass, MMH mass, N2O4 mass, and burn time for each FT mission. It should be noted that the fuel mass is the fuel consumed in the burn, not the entire fuel load.

ACS Configuration

ACS engine configuration is identical to that for PM1, with engines mounted in four clusters of four engines on the top, bottom and sides of the FT, at the vehicle center of mass. Each cluster is configured in a "+" shape, much like the Apollo Service Module

thruster configuration. On the side clusters, the solar array mast protrudes through the center of the cluster. Engine numbering is shown in figure 8-2 and table 8-2.

Given that the FT has an identical ACS configuration to PM1, it will share PM1's capabilities for maneuvering – it is capable of performing any X, Y, or Z-axis translation, or any roll, pitch, or yaw rotation with a two-engine burn. Roll and X translation are also redundant for any single engine and certain two-engine failures with no loss in performance and no increase in fuel expenditure. In the case of other engine failures, other rotation and translation maneuvers can be accomplished with a combination of maneuvers in remaining axes (i.e. roll-pitch-roll to accomplish yaw). And while connected to any LTV spacecraft with a functional ACS, all maneuvers are redundant for any single engine failure and most are redundant for any two-engine failure with zero performance loss or propellant use increase.

Generally, when the FT is docked to another vehicle, all forward firing thrusters (engines 1, 5, 9, and 13) are deselected and appropriate thrusters on that vehicle are used in their place. Additionally, when the FT is docked to PM1, it blocks PM1's engine 16, affecting PM1's ability to perform +X translation and +pitch.

To resolve the pitch problem, FT ACS thrusters 6 and 10 will replace PM1 ACS thruster 16 and PM1 ACS thrusters 5 and 9 will replace PM1 ACS thruster 1. This will replace the two-engine 1-16 combination with a four-engine FT 6-10, PM1 5-9 combination. For +X translation, another four-engine combination will be used: PM1 8-12 and FT 6-10. Attitude control thruster selection for each single axis maneuver is shown in table 8-3.

ACS Performance

Moments of inertia for the FT are estimated in the same manner as for PM1, using the average vehicle mass. The FT-only moments of inertia are I_{xx} = 12077, I_{yy} = 74454, I_{zz} = 74454. When docked with the ADV, moments of inertia are I_{xx} = 98296, I_{yy} = 160673, I_{zz} = 112056. Like PM1, all thrusters have the same moment arm and torque: 1.2 m moment arm and 588 Nm torque. The FT is designed to maintain a deadband of 30 degrees in roll and 10 degrees in pitch and yaw. Its maximum allowed drift angular velocities are 0.090 degrees per second in roll, 0.013 degrees per second in pitch, and 0.013 degrees per second in yaw. Like other spacecraft it takes maximum advantage of the R-4D's minimum impulse bit, thus minimizing propellant consumption.

Docking, separation, and daily attitude control fuel requirements are determined in the same manner as for other LTV spacecraft. These requirements vary with the Fuel Tanker mission being performed. For the LEO refueling mission, a single docking and separation is required. Other missions involve two to three dockings and separations. Attitude control requirements are relaxed during standby loiter times. Table 8-4 summarizes ACS propellant requirements by FT mission. The maximum requirement is shown to be during the outbound L1 refuel mission and is 20 kg. Hence, for tank sizing purposes, the ACS fuel requirement is 20 kg, of which 8 kg is MMH and 12 kg is N_2O_4.

Refueling Operations

Each lunar expedition requires servicing from several Fuel Tankers. Table 8-5 indicates the fuel payloads, vehicle serviced, refueling location, refuel mission, and Fuel Tanker(s) involved for each lunar expedition.

As was previously stated, the ADV requires multiple tankers. One to two tankers will be launched for each lunar expedition, but because some tankers service multiple

missions, there can be anywhere from two to three FTs servicing the ADV for a particular expedition. Odd numbered expeditions will be serviced by two FTs (designated FT1a and FT1b) while even numbered expeditions will be serviced by three FTs (designated FT1a, FT1b, and FT1c).

FT1a denotes the first FT to dock with the ADV during any particular expedition. It will transfer its entire fuel payload and will be destroyed upon completion of its mission by destructively impacting the lunar surface. In even numbered expeditions, FT1b will also transfer its entire fuel payload and will be destroyed in the same manner. In odd numbered expeditions, FT1b will have a fuel surplus after the ADV is filled and it will remain in lunar orbit to await the next mission. The same is true for FT1c in even numbered expeditions. In those subsequent expeditions, the remaining FT (whether it was FT1b or FT1c) will be designated FT1a and it will act in the role of the FT1a during its original mission.

It should be noted that FT3 is used in both Mission 3 and Mission 5. During Mission 5, the CM/PM1 LTV requires 10344 kg of fuel, which is 465 kg more than a FT can provide. However, during Mission 3, it only requires 1417 kg. Consequently, FT3 will carry the 1417 kg, plus 1.5 times the 465, for a total of 2114 kg. Meanwhile, FT5 will carry 9646 kg, which is the 10344 kg minus 1.5 times the 465 kg.

Tank Sizing

The maximum propellant load drives tank sizing, just as with other LTV spacecraft. In the case of the FT, this maximum load occurs during Mission 5 where 4564 kg of MMH and 9312 kg of N_2O_4 are required.

Like PM1 and the ADV, multiple tanks are used and the MPS and ACS share the same tanks. The FT tanks are identical in size to the APS tanks on the CM and the ADV fuel tanks. The FT tank configuration is identical to that of the ADV, carrying a total of eight tanks: four MMH and four N_2O_4. Like other LTV spacecraft, these tanks are fully cross-linked.

8.8 Power

Like other LTV spacecraft, the FT uses a combination of SLA triple-junction solar arrays and lithium polymer electrolyte batteries to supply vehicle power. Unlike PM1, the FT does experience varying power levels depending on flight phase. Table 8-6 provides a summary of FT power requirements by flight phase.

Solar arrays and batteries are sized in the same manner as those onboard other LTV spacecraft, with the exception that the dust factor applied to the ADV is not applied to the FT since the FT never lands on the moon.

A total of 13.85 m^2 of array surface (6.92 m^2 for each of the two array wings on the FT) is obtained by iterating through the algorithm used with the CM and other LTV spacecraft. This yields an array mass of 23 kg. The drive system, like its CM counterpart, is responsible for actuating both the solar arrays and radiator. The drive system is sized at 5 kg. Each array wing has dimensions of 3.72 m by 1.86 m. Like other LTV spacecraft, sun sensors on each array enable it to track the sun for optimum energy generation. The array wing provides for 360-degree rotation along its axis and 180 degree rotation perpendicular to its axis, thus enabling it to track the sun regardless of vehicle orientation. Roughly 204 kg are estimated for the masses of wiring, regulator/converters, and a power control unit. Roughly 4 kg of battery are required.

8.9 Mass Properties

Table 8-7 provides a summary of the Fuel Tanker's systems and their masses. A small growth margin is included to account for any growth in vehicle systems. Like PM1, vehicle dry mass is consistent across all tankers throughout the Trailblazer program, but total mass varies with refueling mission. Like other LTV spacecraft, vehicle structure is estimated using the Larson and Wertz 21.06% parametric (Larson and Wertz, 1992).

8.10 ELV Deployment

The Fuel Tanker will be lifted from the Earth's surface by Delta IV and Atlas V expendable launch vehicles. The ELV will place the FT into a 407 km altitude, 28.5-degree inclination orbit. The ELV is not responsible for supplying any power or thermal conditioning to the FT after launch (though the launch pad does need to supply both). If necessary, the FT can supply inertial and GPS guidance data to the ELV. The ELV will separate as soon as orbit has been achieved. For the LEO refuel mission, the ELV targets it to intercept the CM/PM1. For other missions, the FT will await a PM2, which will transport it to L1 or LLO, depending on its mission.

Chapter Nine – Propulsion Module 2

9.1 Overview

PM2 is the "dumb booster" of the LTV. It serves the role of the Saturn V's S-IVB stage, propelling LTV spacecraft beyond Earth orbit onto a trajectory towards either L1 or lunar orbit. Like the CM, PM2 is a modification of existing spacecraft. Both the current Centaur and the Delta IV second stage (Delta 4-2) have the basic characteristics required for PM2 (It should be noted that there are two configurations for the Delta 4-2, a 4-m diameter version and a 5-m diameter version. This dissertation will refer only to the 5-m version whenever the Delta 4-2 is mentioned.). For purposes of this conceptual design it is not necessary to make any decision between the Centaur and Delta 4-2, and in all likelihood an eventual Trailblazer system would use both, applying cost and performance as the deciding factor to select one for a particular flight. Analyses will be conducted for both the Centaur and Delta 4-2 variants of PM2.

In general, the Centaur and Delta 4-2 will not be significantly modified. PM2 will use the same avionics, thermal, propulsion and attitude control systems on the existing Centaur/Delta 4-2. The most significant impact is the requirement for PM2 to dock with a waiting target and then propel the target beyond LEO. Normally, an upper stage is already attached to its payload. Unfortunately, ELV payload restrictions do not allow for most LTV spacecraft to be launched with PM2.

9.2 Centaur Summary

The Centaur was developed in 1958 to launch NASA robotic spacecraft on lunar and interplanetary missions. Since that time, it has flown over a hundred commercial,

military, and government missions on Atlas and Titan rockets (Atlas Launch System Mission Planner's Guide, Atlas V Addendum, 1999).

The current version of the Centaur is 3.05 m in diameter and 12.68 m long. In figure 9-1, a Centaur is shown being raised into position to be mated to a launch vehicle. It uses the RL-10A-4-2 engine, in either a single or dual engine configuration. It burns liquid oxygen and liquid hydrogen with an Isp of 450.5 seconds. In the single engine configuration it has a mass of 1914 kg and in the dual engine configuration it has a mass of 2106 kg. The single engine configuration uses one electromechanically actuated 51-cm Columbium fixed nozzle, while the dual engine configuration uses two electromechanically actuated 51-cm Columbium extended nozzles. Inertial guidance is provided by ring laser gyros and accelerometers (Atlas Launch System Mission Planner's Guide, Atlas V Addendum, 1999).

A polyvinyl chloride foam provides insulation for the liquid hydrogen and liquid oxygen cryogenic propellants. Pressure stabilized stainless steel tanks are separated by a common ellipsoidal bulkhead. Helium and hydrogen provide tank pressurization (Atlas Launch System Mission Planner's Guide, Atlas V Addendum, 1999).

The standard Centaur supports a mission with park orbit coast times up to 65 minutes. This can be extended to a three-hour coast by replacing the 150-amp-hr main battery with two 250-amp-hr batteries and adding a LH_2 tank sidewall radiation shield (Atlas Launch System Mission Planner's Guide. Revision 9, 2001).

9.3 Delta 4-2 Summary

Information concerning the Delta 4-2 is less readily available, presumably because the Delta 4-2 is still in development, whereas the Centaur has been flying since

the dawn of the space program. However, Boeing has made some Delta 4-2 information publicly available.

The Delta 4-2 is derived from the Delta III second stage and has a gross mass of 30,710 kg (Delta 4H-2, 2002) and carries 27,200 kg of propellant (Delta IV Payload Planner's Guide, 2000), suggesting a dry mass of 3490 kg. Figure 9-2 shows a Delta 4-2. It uses a single RL-10B-2 engine with an extendible nozzle and an electromechanically actuated gimbal. The RL-10B-2 is shown in figure 9-3. It has an 1125 second burn time and an Isp of 462 seconds. The Delta-4-2 can sustain a seven-hour mission (Delta IV Payload Planner's Guide, 2000).

Boeing Rocketdyne Propulsion & Power and Mitsubishi Heavy Industries, Ltd. have teamed up to develop a new upper stage engine that may eventually replace the RL-10B-2. The MB-60 is a high performance liquid oxygen/liquid hydrogen engine with an expected Isp of 467 seconds and a 267 kN thrust. It has a mass of 591 kg. Full-scale development began in 1999 and it is slated to begin flight operations on the Delta IV in 2004 (MB-XX, 2002). The MB-60 is shown in table 9-1.

9.4 PM2 Docking Systems

PM2 is equipped with a single passive MDAS-augmented APAS for docking with other LTV spacecraft. For the AM mission, the APAS is mounted on the ventral side of PM2. In the case of the Delta 4-2, this will mean mounting the APAS on the LH_2 tank. This PM2 will also feature six MGS steel plates. This is necessary due to the docking configuration inside the AM, as explained in chapter seven. PM2 will be captured by the AM in the same manner that the vehicle captures the CM/PM1. For all other missions,

the APAS is mounted on the front of PM2. During docking operations, PM2 will always be the passive vehicle.

9.5 Communications

PM2 will not feature any modifications to the Centaur/Delta 4-2 communications systems other than a short-range transmitter to enable PM2 to communicate over the wireless network with other LTV spacecraft. PM2 will have the ability to transmit through other LTV spacecraft to the FTDRSS network when docked.

9.6 Power

The Delta 4-2 power system will be unchanged for PM2. However, to give the Centaur equal endurance to the Delta 4-2, a minor change will be made. As previously mentioned, the Centaur uses one 150-amp-hr battery or two 250-amp-hr batteries, depending on mission duration. Taking the latter and using the electrical power formula P=IV to convert to kWh (assuming the 2.3 V used on other LTV spacecraft solar arrays), the Centaur requires 1.15 kWh for a 3-hour mission. Dividing this by 3 hours, it is seen that the Centaur uses 0.383 kW. Using the same sizing methods used for other LTV spacecraft, a 7-hour lithium polymer electrolyte battery can be sized for the Centaur. The required battery mass is 11 kg.

9.7 PM2 Missions

PM2 is responsible for eight different vehicle/trajectory combinations, though all of these will not be featured in every lunar expedition.

CM

PM2 is used to propel the CM from LEO to L1, starting a crew on their lunar journey. This mission is required every lunar expedition.

PM1/AM

Because PM1 is relatively light in its outbound configuration, it can be transported to L1 along with the AM. In order to accomplish this, both PM1 and PM2 must dock with the AM. PM1 will be captured upside down and will be positioned in place to dock with the forward dorsal docking mount, the mount normally used for the CM. PM2 will be captured in a normal orientation and will be positioned in place to dock with the aft ventral docking mount, the mount normally used for PM1. Once PM2 completes its burn, PM2 will separate and be discarded. PM1 will also separate from the AM so that the AM and PM1 can individually perform their L1 capture burns. This mission is required every lunar expedition.

PM1-Spare/AM-Spare

Similarly, PM1 and the AM both have spares that must be deployed to L1. Like their primary units, they will ride together to L1 under the power of a PM2. This mission is required only once, at the beginning of the Trailblazer program before any lunar expeditions take place.

ADV

PM2 is also used to transport the ADV from LEO to lunar orbit. This mission is required only once, also at the beginning of the Trailblazer program and prior to the first lunar expedition.

FT Missions

The FT(s) used to fuel the ADV must be transported by PM2 from LEO to lunar orbit. During the first expedition and during even numbered expeditions, two identical FTs are transported to LLO (FT Mission 1 and 1b). During all odd numbered expeditions other than the first, one FT is transported to LEO (FT Mission 1). A PM2 must also transport a FT to L1 for use in fueling PM1 during its outbound journey to the moon (FT

Mission 3; Note there is no PM2 required for FT Mission 2 because that mission is to LEO.). Another PM2 sends a FT to LLO for the purpose of fueling PM1 once it reaches lunar orbit (FT Mission 4). Finally, a PM2 sends a FT to L1 for use in fueling the CM/PM1 during the inbound return flight from the moon (FT Mission 5).

9.8 Propulsion

Each PM2 performs a single main engine burn to propel its payload spacecraft away from Earth. As previously stated, PM2 uses the Centaur/Delta 4-2 propulsion systems without alteration. However, fuel tank loading varies significantly with each mission. Table 9-2 shows propellant requirements for each PM2 mission (as indicated by the LTV spacecraft PM2 is propelling), assuming the use of a Centaur as PM2. Table 9-3 shows the same requirements, assuming the use of a Delta 4-2 with the RL-10B-2 engine and table 9-4 shows the same, assuming the use of a Delta 4-2 with the MB-60 engine. These tables show that performance drops off with the use of the Delta 4-2, which is not necessarily the intuitive result, given that the Delta 4-2 uses higher efficiency engines. The problem that limits the Delta 4-2 is that its fuel tanks are too large for either the Delta IV or Atlas V to lift into orbit when fully loaded. Consequently, if the Delta 4-2 is used, it must launch without full fuel tanks, creating an immediate performance penalty. The Centaur, however, is small enough that it can be launched fully loaded and therefore suffers no performance penalties.

9.9 Mass Properties

It should be apparent by now that PM2 total mass varies significantly depending on the spacecraft PM2 is transporting, orbital destination, PM2 upper stage selected, and engine selected (in the case of the Delta 4-2). This has some impact on launch vehicles,

because in some cases, PM2 mass could exceed the published mass limits of available expendable launch vehicles. The most powerful ELVs are the heavy versions of the Delta IV and Atlas V, which can lift roughly 23,000 to 25,000 kg into orbit. Even the most efficient PM2 is useless if it cannot be lifted into orbit. Table 9-5 shows PM2 total mass and the percentage of the Delta IV and Atlas V's maximum payload capacities required to place PM2 in orbit for each PM2 mission, assuming a Centaur PM2. Tables 9-6 and 9-7 show the same data, assuming a Delta 4-2 RL-10B-2 PM2 and a Delta 4-2 MB-60 PM2, respectively.

9.10 ELV Deployment

While it is likely that both Delta IV and Atlas V payload capabilities can be enhanced if Boeing and Lockheed Martin are provided sufficient incentive, doing so would not be a cost-free endeavor and one of the constraints of this dissertation is no new launch vehicle development, which includes major enhancements to existing vehicles. Consequently, published Delta IV and Atlas V limits will be considered real limits for PM2 mass. This constrains several PM2 missions to use only the Centaur PM2, if flying on the Delta IV: CM, PM1-S/AM-S, ADV, FT-M1, and FT-M5. The other PM2 missions – PM1/AM, FT-M3, and FT-M4 – can be conducted with any of the three possible PM2 vehicles. The Atlas V imposes no such limitations due to its maximum payload capacity of 25,000 kg. While several missions do push the Atlas V to its upper performance limits, it can launch all PM2 missions using any PM2 vehicle.

Atlas and Delta launch vehicles will be required to target a rendezvous time of five hours or less after launch for PM2 rendezvous with its L1 or LLO payload. This is

necessary in order to complete docking and subsequent injection burns before PM2 exhausts its battery power or boils off too much propellant.

In order to minimize propellant boiloff, the ELV's upper stage will remain attached to PM2 and will point its aft section towards the sun. Thus, residual cryogenic propellants in the ELV upper stage and the stage's physical structure will serve as an additional insulator for PM2.

Chapter Ten - LTV Mission Control Analysis

Mission Control operations are a significant aspect of any space program's ongoing costs. Mission Control operations are also central aspects of the safety and success of any space mission and should be considered at the earliest stages of program development. Before designing the mission control architecture for the LTV, it is worth considering previous mission control architectures. Limited descriptions were obtained of the mission control center configurations for Apollo 11, shuttle, and ISS. Much of the data in this chapter regarding current Mission Control Center (MCC) operations was gleaned from the author's personal experience as an undergraduate NASA Scholar and graduate co-op in space shuttle Mission Control, in the Guidance and Control Systems Group (referred to in this chapter as console position GNC).

In general, mission control centers have one central room and one or more support rooms, which have gone by various names. The central room is the one commonly seen on television when references are made to mission control. In the Apollo program this room was known as the MOCR, which was short for Mission Operations Control Room. The nomenclature in ISS and shuttle is FCR, short for Flight Control Room.

The ISS and shuttle programs are supported by MPSRs – Multi-Purpose Support Rooms. These are additional consoles distributed throughout Building 30 at Johnson Space Center (the mission control building). A team of one or more MPSR consoles supports each console in the FCR.

Similarly, Apollo MOCR consoles were supported by a wide variety of supplemental consoles. The documentation available did not specify whether the MPSR

acronym was in use at that time (Apollo 11 Reunion Committee, 1989). One thing, however, was clear. The Apollo mission control architecture was much larger than that for shuttle or ISS. In recent years, automation has enabled mission managers to implement smaller flight control teams.

(It should be noted that every console position acronym will not be translated in this section, nor is it necessary to do so. Advocates of proper English are often quick to criticize NASA for its use of acronyms – it has been said that there are more NASA acronyms than there are words in the English language. A quick glance at either of NASA's main acronym dictionaries makes one inclined to believe the statement is true. At any rate, some acronyms are so thoroughly integrated into day-to-day life that the origin of an acronym is sometimes forgotten. Some of the mission control acronyms are easy to translate; others could probably only be explained by those engineers who participated in naming them – provided they themselves haven't forgotten what the acronyms stood for.).

According to the Apollo 11 20th Anniversary Flight Operations Reunion souvenir book, the Apollo MOCR had 27 console positions with an additional 154 support positions (Apollo 11 Reunion Committee, 1989). By contrast, according to data supplied by Systems Division Deputy Chief Stan Schaefer and available on the internet at NASA's spaceflight.gov site, the shuttle FCR has 22 console positions and the ISS FCR has 18 console positions (Schaefer, 2002; Blue FCR; Shuttle Mission Control Center). Data was not provided for shuttle and ISS MPSR positions. Assuming an average of two to three MPSR positions per FCR position, however, anywhere from 36 to 66 positions is a reasonable guess.

However, the decrease in flight controllers for ISS is arguable as to whether or not it is a legitimate decrease. For the most part, there is a one to one correspondence between shuttle and ISS flight control positions, with a few exceptions. One exception is an increase. The shuttle position EECOM is analogous to two ISS positions: THOR and ECLS. The net drop in ISS FCR positions is due to the fact that there is no counterpart position to FDO, Rendezvous, Booster, or MOD. The MOD position is simply a console reserved for senior NASA management if they wish to observe mission operations. FDO, Rendezvous, and Booster all are primarily concerned with dynamic flight phases. ISS is incapable of dynamic flight. Its limited flight control abilities have been absorbed by ADCO, the ISS's counterpart to shuttle's GNC. Thus, the only shuttle FCR positions without counterpart positions on ISS are those for senior NASA observers or those for functions ISS does not perform. So on the basis of FCR personnel per vehicle function, ISS actually has a slight increase with the splitting of EECOM into THOR and ECLS.

Both shuttle and ISS are trying to reduce their flight control teams, however. Shuttle has implemented a program called FCR-only. During selected periods where a particular console position experiences light activity, that position will operate without MPSR support. Taking the reduction a step further, ISS has implemented Gemini operations during weekends (and eventually third shift). Under Gemini, the FCR positions of PHALCON, THOR, and ECLS are combined into a single position: ATLAS, while the positions of ODIN, ADCO, and CATO are combined into a separate position: TITAN. Thus, six console positions are reduced to two. ATLAS and TITAN are also both FCR-only positions. Many ISS FCR positions are also FCR-only during Increment Ops (when ISS is in a low activity period, with no visiting vehicles present) and use

MPSR support during Assembly Ops (where the shuttle is present and there is more dynamic activity).

10.1 Apollo, Shuttle, and ISS MOCR/FCR Positions

Apollo MOCR Positions

Director of Flight Operations
Flight Director
Assistant Flight Director
CSM/Guidance, Navigation & Control
CSM/EECOM
CSM/INCO
Flight Dynamics Officer
Retrofire Officer
Guidance Officer
Booster Systems Engineer – 1
Booster Systems Engineer – 2
Booster Systems Engineer – 3
LM/Control
LM/Telcom
LM/EMU
Surgeons
Experiments Officer
Network Controller
ALSEP Network Controller
Operations and Procedures Officer
Public Affairs Officer
PAO Assistant
PAO Photographers
TV Edit
Audio/TV Coordinator
CAPCOM
Flight Activities Officer

Shuttle FCR Positions with descriptions

Flight Director – Flight
: Flight serves as leader of the flight control team, and is responsible for the conduct of the overall team. Acts as the focal point for all decisions made relative to the on-orbit mission

Spacecraft Communicator (CAPCOM).
: CAPCOM serves as the prime communications link between MCC and the crew aboard the station.

Russion Inerface Operator – RIO
: RIO serves as primary interface between the United States and Russian control teams

Extravehicular Activities – EVA
: EVA monitors all aspects of the spacewalks based out of the shuttle and station. This includes monitoring the technical operation of the spacesuits and the activities to be carried out as trained prior to the mission

Surgeon
: The Surgeon monitors crew health, provides crew consultations, coordinates crew medical operations and advises the Flight Director of any related issues that may affect mission success.

Public Affairs Officer – PAO
: PAO provides mission commentary to supplement and explain air-to-ground transmissions and flight control operations to the news media and the public.

Ground Controller – GC
: GC directs maintenance and operation activities affecting Mission Control hardware, software and support facilities. GC coordinates the ground Space Flight Tracking and Data Network and the TDRSS used for data and voice transmissions between the MCC and the shuttle or station.

Mission Operations Directorate – MOD
: MOD provides a link from the FCR to top NASA and mission managers

Payload Deployment and Retrieval Systems – PDRS
: PDRS monitors operation of the RMS used to deploy, retrieve and position satellites and other cargo in the payload bay

Flight Activities Officer – FAO
: FAO plans and supports crew activities, checklists, procedures and schedules and plans/manages the orientation of the shuttle in space

Payloads

Payloads coordinates onboard and ground system interfaces between the flight control team and payload user, and monitors in-cabin and cargo bay systems experiments and satellites

Flight Dynamics Officer – FDO

FDO plans maneuvers and monitors trajectory in conjunction with the guidance officer

Rendezvous Guidance and Procedures – Rendezvous

Rendezvous supports shuttle missions during deploy, rendezvous, proximity operations phases, docking and undocking; whenever complex crew procedures are affecting orbit dynamics

Shuttle Data Processing Systems – DPS

The DPS determines status of data processing systems including the five onboard general purpose computers, flight-critical and launch data lines, the multifunction display system, mass memories and systems-level software.

Shuttle Comm & Tracking Systems – INCO

The INCO plans and monitors in-flight communications and instrumentation systems configuration, and controls shuttle television systems from the ground.

Shuttle Ascent Propulsion – Booster

Booster monitors and evaluates the main engines, solid rocket boosters and external tank performance during the pre-launch and ascent phases of missions.

Shuttle Mechanisms, Hydraulics and Maintenance – MMACS

The MMACS monitors operation of the orbiter's structural and mechanical systems, and follows use of onboard crew hardware and in-flight equipment maintenance.

Shuttle Guidance Navigation & Control Systems – GNC

The GNC monitors all vehicle guidance, navigation and control systems; notifies the flight director and crew of impending abort situations and advises crew regarding guidance hardware malfunctions.

Shuttle Propulsion Systems – Prop

The PROP monitors and evaluates reaction control and orbital maneuvering system jets and propellants and other consumables available for maneuvers.

Shuttle Electrical Power Systems – EGIL

EGIL monitors electrical systems, fuel cells and associated cryogenics, AC and DC power circuits, vehicle pyrotechnics and lightning, and hardware caution and warning systems.

Shuttle Life Support & Thermal Systems – EECOM

The EECOM is responsible for passive and active thermal control of the vehicle, cabin atmosphere control, avionics cooling, supply/waste water system management and fire detection/suppression.

ISS FCR Positions with descriptions

Flight Director – Flight

Flight serves as leader of the flight control team, and is responsible for the conduct of the overall team. Acts as the focal point for all decisions made relative to the on-orbit mission

Spacecraft Communicator – CAPCOM).

CAPCOM serves as the prime communications link between MCC and the crew aboard the station.

Russion Inerface Operator – RIO

RIO serves as primary interface between the United States and Russian control teams

Extravehicular Activities – EVA

EVA monitors all aspects of the spacewalks based out of the shuttle and station. This includes monitoring the technical operation of the spacesuits and the activities to be carried out as trained prior to the mission

Surgeon

The Surgeon monitors crew health, provides crew consultations, coordinates crew medical operations and advises the Flight Director of any related issues that may affect mission success.

Public Affairs Officer – PAO

PAO provides mission commentary to supplement and explain air-to-ground transmissions and flight control operations to the news media and the public.

Ground Controller – GC

GC directs maintenance and operation activities affecting Mission Control hardware, software and support facilities. GC coordinates the ground Space Flight Tracking and Data Network and the TDRSS used for data and voice transmissions between the MCC and the shuttle or station.

Robotics Operations Systems Officer - ROBO

ROBO monitors the operation of the station's SSRMS and the Mobile Servicing System

Assembly and Checkout Officer – ACO

ACO maintains inventory of all supplies and equipment aboard ISS. ACO is also responsible for getting supplies to and from ISS

Operations Planner – OP

OP is responsible for developing and coordinating operations plans and crew work schedules, or timelines, during periods when the shuttle is not docked to the station

ISS Data Processing Systems – ODIN

ODIN manages computer hardware and software, caution and warning, command and data processing as well as data interfaces with the International Partners.

ISS Comm & Tracking Systems – CATO

CATO manages the International Space Station's on-orbit communication systems.

ISS Mechanisms and Maintenance – OSO

OSO manages all on-orbit maintenance activities, including development, training and analysis of procedures on the ground before being carried out on orbit.

ISS Guidance Navigation & Control Systems – ADCO

ADCO is responsible for the integration of all guidance, navigation and control of the station.

ISS Electrical Power Systems – PHALCON

PHALCON manages the electricity available to operate International Space Station systems and experiments.

ISS Life Support Systems – ECLS

ECLS oversees the assembly, checkout and operation of all environmental control functions and life support systems.

ISS Thermal Systems – THOR

THOR is responsible for the assembly, checkout and operation of the International Space Station's thermal control system.

Gemini – ISS TITAN & ATLAS

Atmosphere, Thermal, and Lighting Articulation Specialist (ATLAS) is the combination of PHALCON, THOR, and ECLS; and Telemetry, Information Transfer, & Attitude Navigation (TITAN) is the combination of ODIN, ADCO, and CATO.

10.2 LTV MCC Development

An analysis of the shuttle and ISS FCR positions shows that between the two spacecraft programs, most of the functionality required to operate a single spacecraft in space have been represented.

Despite the fact that the Apollo MOCR is a type of LTV program, it is not as useful as an analogue for Trailblazer LTV MCC operations as one might initially assume because its positions assume the level of technology available in the 1960s. Artists, secretaries and audiovisual personnel present in the Apollo MOCR have been replaced by

modern word processing and telecommunications equipment. Vehicle systems were orders of magnitude simpler, reducing the level of MCC analysis necessary (though not necessarily reducing the ground effort as many computations were literally done by hand with slide rules, pencil and paper). These factors result in a very different MCC than any that would exist today. It is still important to pay close heed to the Apollo MCC, because some support room functions (e.g. space environment console and midcourse corrections specialist) are important for cislunar travel but have no bearing on LEO travel and are thus not represented anywhere within the shuttle or ISS MCC architectures.

In the Apollo program, the Apollo MOCR was responsible for all aspects of the lunar mission. However, because Trailblazer assumes a permanent lunar facility that is visited for 30-day periods, the surface and human lunar transit responsibilities will be separated. The LTV FCR will only be responsible for the lunar transfer vehicle. As such, its responsibilities encompass the six spacecraft that compose the LTV and only include the astronauts when they are aboard the LTV. Before the astronauts board the LTV, they are the responsibility of the shuttle or ISS FCR (depending on the LTV's point of origin). Once they exit the LTV's ADV on the surface of the moon, they become the responsibility of a lunar base FCR and remain that FCR's responsibility until they enter the ADV to return to Earth. They then cease to be the LTV FCR's responsibility as soon as they exit the CM, whether they exit on Earth's surface, at a shuttle, or at ISS.

There are several key differences between the LTV and shuttle, ISS and Apollo that will affect the LTV FCR composition. Most important is that the LTV is composed of multiple spacecraft in various locations. Apollo was similar in that the Apollo Command/Service Module and the Lunar Module functioned as two separate spacecraft

for significant portions of the mission. Apollo did have numerous positions devoted specifically to either the CSM or the LM. Shuttle has no analogue to this. ISS's closest analogue is the Crew Return Vehicle, which is currently a Russian Soyuz, monitored by its own control center in Russia. Unfortunately, the CRV's fate is questionable due to White House-imposed funding cuts. However, if the CRV does fly, a separate CRV mission control has been developed at Johnson Space Center, including a separate FCR with its own dedicated room and a MPSR that does not have its own dedicated hardware, but uses consoles normally used by shuttle payloads. The X-38 CRV MCC consists of 23 FCR flight controllers and 12 MPSR flight controllers with a total of 70 MCC operators (Rader, 2002).

Additionally, the LTV is a system of spacecraft in permanent flight, like ISS. Some component spacecraft are permanently in space, while others are periodically launched and have short life spans. After the initial deployment, a maximum of 14 and a minimum of 5 LTV component spacecraft will be at various locations in space at any one time. This is different from shuttle or Apollo in that both programs only experienced short periods of actual flight. However, more like shuttle and Apollo, the LTV only has crew onboard for a short period of time. So for the majority of any given year, the LTV is a network of unmanned spacecraft.

So in short, the Trailblazer LTV is a network of spacecraft that maintain precise positioning relationships with respect to each other. Some are permanently in space, while others have brief missions. For most of the time they are unmanned, but for short periods of time crews do come onboard. Orbital transfers, rendezvous, docking,

refueling, and other critical spacecraft events may take place with or without human crew onboard.

It would be far too unwieldy to devote a separate FCR, or even a separate console position to each LTV spacecraft. FCR positions will be based around LTV functionality, with console operators responsible for all spacecraft capable of performing that particular function. The LTV FCR will consist of 21 console positions, each of which are as similar as possible to analogous shuttle and station console functions.

LTV FCR Position Descriptions

Flight – Flight Director

Flight serves as leader of the flight control team, and is responsible for the conduct of the overall team. Acts as the focal point for all decisions made relative to the in-space mission. Flight is identical to its shuttle and ISS counterparts.

CAPCOM – Capsule Communicator

CAPCOM serves as the prime communications link between MCC and the crew aboard the LTV. CAPCOM is identical to its shuttle and ISS counterparts.

Surgeon – Flight Surgeon

The Surgeon monitors crew health, provides crew consultations, coordinates crew medical operations and advises the Flight Director of any related issues that may affect mission success. Surgeon is identical to its shuttle and ISS counterparts.

MOD – Mission Operations Directorate

MOD provides a link from the FCR to top NASA and mission managers. MOD is identical to its shuttle counterpart.

PAO – Public Affairs Officer

PAO provides mission commentary to supplement and explain space-to-ground transmissions and flight control operations to the news media and the public. PAO is identical to its shuttle and ISS counterparts.

GC – Ground Controller

GC directs maintenance and operation activities affecting Mission Control hardware, software and support facilities. GC coordinates the ground Space Flight Tracking and Data Network and the TDRSS used for data and voice transmissions between the MCC and the LTV spacecraft. GC is identical to its shuttle and station counterparts.

EVA – Extravehicular Activities

EVA monitors all aspects of any spacewalks based out of the Crew Module, or into/out of the Ascent-Descent Vehicle when it is in lunar orbit. This includes monitoring the technical operation of the spacesuits and the activities to be carried out as trained prior to the mission. EVA is identical to its shuttle and ISS counterparts.

ELVIS – Earth Launch Vehicle Integration and Support Officer

ELVIS serves as primary interface between MCC and launch control teams for Earth launch vehicles transporting LTV spacecraft into orbit. ELVIS is slightly analogous to the RIO position in both shuttle and station control centers. The difference, of course, is that ELVIS interfaces with the launch/mission control teams for the shuttle, Delta, and Atlas control centers as opposed to RIO's interface with the Russian space program.

SABER – Solar and Battery Electrical Power Resource Officer

SABER is responsible for the operation of all solar array and battery systems on LTV spacecraft. SABER is responsible for the electrical energy resource management including the planning analysis necessary to ensure adequate resources are available for LTV operations. SABER is similar to shuttle's EGIL and ISS's PHALCON.

LIFE – Life Support Systems Officer

LIFE is responsible for all life support systems on the Crew Module and Ascent-Descent Vehicle, including cabin pressure, temperature and humidity control, atmospheric revitalization, fire/smoke, waste collection, galley, and emergency response. LIFE is also responsible for all preparation for extravehicular activities. LIFE coordinates with corresponding positions on other flight control teams (i.e. shuttle, ISS) to ensure atmospheric compatibility during dockings to other pressurized spacecraft prior to hatch opening. LIFE is similar to the portion of shuttle's EECOM responsible for life support and to ISS's ECLS.

TEMPER – Temperature Management Officer

TEMPER is responsible for the management of all active and passive thermal control systems on each LTV spacecraft. TEMPER is also responsible for thermal load sheds and thermal assessments during all launch and flight phases. TEMPER is also responsible for Aeroshell and Crew Module TPS. TEMPER is similar to the portion of shuttle's EECOM responsible for thermal control and to ISS's THOR.

VADER – Voice and Data Relay Officer

VADER is responsible for maintaining a communications network consisting of all LTV spacecraft, the FTDRSS constellation, MCC, the lunar surface base and its support vehicles, and the White Sands Complex. VADER will oversee the autonomous configuration of LTV spacecraft to serve as relays between FTDRSS and other LTV spacecraft. VADER is responsible for photo/video, telemetry formats, and communications outage recorders. VADER is also responsible for communication between LTV spacecraft and any EVA crewmembers. VADER is similar to shuttle's INCO and ISS's CATO.

VEHICON – Vehicle Configuration Manager

VEHICON is responsible for maintaining real-time configurations of all LTV spacecraft, including masses and moments of inertia. VEHICON also is responsible for LTV mechanical systems, crew systems, and in-flight maintenance. VEHICON maintains cognizance of operations and status of LTV mechanical assets related to structures and mechanical systems functions. VEHICON is additionally responsible for monitoring the space environment, including radiation, micrometeoroid, and orbital debris assessments. VEHICON is the FCR POC for RAT, Surgeon, EVA, and LIFE when they are on-call. VEHICON trains crew and flight controllers for in-flight maintenance. VEHICON is similar to shuttle's MMACS and ISS's OSO, but is more involved than either.

STAR – Sensors, Trajectory and Attitude Recognition Officer

STAR is responsible for preflight planning and monitoring and verification of the performance of each LTV module's autonomous navigation systems, including vehicle sensors and associated navigation software. STAR is responsible for uploading trajectory and attitude targets to each LTV and coordinating with EMCEE to adjust timelines as necessary. STAR is the FCR POC for HYPER, DART, and ELVIS when they are on-call. STAR is analogous to a combination of shuttle's FDO and the Sensors portion of GNC, as well as the portion of ISS's ADCO responsible for sensors and trajectory.

PAC-MAN – Propulsion and Attitude Control Systems Manager

PAC-MAN is responsible for the Main Propulsion System and Reaction Control System on each LTV module, excluding the cryogenic Propulsion Module 2. Working closely with STAR, the PAC-MAN team builds and manages the attitude timelines and propellant budgets for each vehicle, coordinating refueling with RAT and EMCEE. PAC-MAN is responsible for the overall controllability of the LTV spacecraft and for health and performance monitoring of the thrusters, controllers and effectors utilized to control the vehicles. PAC-MAN is analogous to a combination of shuttle's PROP and the Controls portion of GNC, as well as the portion of ISS's ADCO responsible for attitude control.

CANDIES – Computers and Networked Data Interface Systems

CANDIES is responsible for the management of the LTV's networked computer systems. CANDIES is responsible for the integration of all computer activities and utilization and analysis of computer resources. CANDIES is also responsible for the coordination of commands to LTV spacecraft by other console positions. CANDIES is responsible for Caution & Warning Management, Pre-Planned Command Package Management, file management, software and data files updates, memory management, network administration, and Time-tagged Command Queue Management. CANDIES is similar to shuttle's DPS and ISS's ODIN.

EMCEE – Mission Coordinator

EMCEE is responsible for the overall mission timeline, working with other console positions to schedule and coordinate the relative positions of each LTV spacecraft. EMCEE coordinates LTV interaction with all other spacecraft and landing sites and is the primary point of contact to other mission control teams. EMCEE develops contingency schedules to accommodate missed launch windows or other unplanned delays. EMCEE also plans and supports crew and automated activities, checklists, procedures and schedules. EMCEE is similar to shuttle's FAO and ISS's OP, but is more involved than either.

RAT – Resupply and Transfer Officer

RAT is responsible for scheduling of consumables resupply to all LTV spacecraft. RAT also maintains inventory of all supplies and equipment aboard the Crew Module and Ascent-Descent Vehicle. RAT coordinates with EMCEE and shuttle FAO and Payloads to develop timelines for Crew Module servicing during shuttle dockings. RAT is similar to shuttle's Payloads and ISS's ACO, but is more involved than either position.

AT-AT – Automated and Teleoperated Appendages and Tools

AT-AT monitors the performance of LTV manipulators, including the communications antenna, solar array, and radiator drive mechanisms, steerable camera pointing mechanisms, the Aeroshell Module's Magnetic Guide System, and all Magnetic Docking Aid Systems. AT-AT is similar to shuttle's PDRS and ISS's ROBO.

DART – Docking and Rendezvous Trajectory Officer

DART assists STAR in monitoring planned and in-progress vehicle trajectories and rates during all rendezvous, proximity operations, ascent, descent, docking and undocking phases. DART is similar to the shuttle Rendezvous position. ISS's ADCO shares a greatly reduced version of similar responsibilities.

HYPER – High Energy Propulsion Officer

HYPER is responsible for monitoring Propulsion Module 2 performance, including cryogenic propellant tanks, main engine, attitude control, and inertial sensors. HYPER coordinates with DART, STAR, ELVIS and AT-AT for all Propulsion Module 2 dockings to other LTV spacecraft. HYPER is somewhat analogous to the shuttle Booster console position. There is no ISS counterpart.

For the most part, these positions mirror the responsibilities shared by the shuttle and ISS FCR teams, though some positions have additional responsibilities imposed by aspects of the LTV systems and mission that are not present on the shuttle or ISS. Perhaps the most striking difference is the merger of shuttle's GNC and FDO into LTV's STAR. This combination is made possible by the extensive use of autonomous navigation in the LTV. In the shuttle program, GNC is responsible for the operational

readiness of sensors used to navigate, while FDO is responsible for the actual navigation determination. However, in the LTV, most of those navigation tasks have been moved onto the vehicle, reducing the ground workload in the FDO arena. Additionally, modern avionics more fully incorporate built-in test equipment (BITE) and fault identification, detection and resolution (FIDR), reducing the ground workload in the GNC arena as well.

LTV MCC Communications

While the LTV FCR is approximately the same size as a shuttle or ISS FCR, there is a concern to reduce the workload on the Flight Director. It is a difficult task to effectively manage a group of this size. Consequently, a nominal operations reporting chain will be used.

In the shuttle and ISS FCRs, flight controllers talk over various communications loops. The FCR is on one loop and all controllers in the FCR can hear each other. Additionally, each FCR position has a loop for its MPSR, so that the FCR operator can talk to his or her support personnel, without dragging the rest of the control center into the conversation. For the Flight Director, it can be a challenging prospect to keep track of all of the various communications on the FCR loop.

Consequently, the LTV FCR will implement loops within the FCR. For emergency situations, each FCR flight controller will speak to Flight or other disciplines over a FCR-wide loop. However, for nominal operations, several sub-loops will be implemented: Ops, Astro, Schedule, Systems, and Bio.

The Ops loop is the primary command loop. Flight, CAPCOM, EMCEE, STAR, VEHICON, LIFE, MOD, PAO, and GC will communicate over Ops. This is the loop for activities relating to overall mission operations.

The Astro loop is the primary navigation loop. STAR, PAC-MAN, HYPER, and DART will communicate over Astro. This loop is for vehicle pointing, trajectory, and navigation activities.

The Schedule loop is the primary scheduling loop. EMCEE, ELVIS and RAT will communicate over Schedule. This loop is for coordination of vehicle scheduling activities.

The Systems loop is the primary systems status loop. VEHICON, SABER, TEMPER, AT-AT, CANDIES, VADER, STAR, and LIFE will communicate over Systems. This loop is for ensuring proper vehicle functionality and non-critical fault resolution. Any vehicle failures that threaten crew or mission safety will be addressed over the FCR loop instead of just the Systems loop.

The Bio loop is the primary crew systems loop. LIFE, EVA, Surgeon, VEHICON, and CAPCOM will communicate over this loop. This loop is for any non-critical issues affecting crew health, life support, or crew accommodations. Like Systems, any issues that threaten crew or mission safety will be addressed over the FCR loop.

LTV MCC Staffing

Because of the unique nature of the LTV, it will not be necessary to staff all FCR console positions at all times. While there will be 24 hour, 365 day MCC operations, it will not apply to all disciplines. Some console positions only need to be staffed while crew are onboard the LTV. Others need daily attention, but not necessarily 24 hour a day attention. Still others need only be staffed during certain mission activities.

CAPCOM, Surgeon and EVA will only be staffed while crew are onboard the LTV, roughly 29 days per year. HYPER will only be staffed while PM2s are in service (including a portion of the prelaunch activities), roughly 55 days per year. DART will be staffed only when rendezvous activities are in progress, roughly 206 days per year. All of these console positions will be staffed 24 hours a day when they are in use.

EMCEE, ELVIS, and RAT will be staffed 365 days per year, but only during the day shift. While each of these positions requires daily attention, none of them need moment-by-moment monitoring. Occasionally, these positions will require attention during other shifts. On those days, the staffed shift will move from the day shift to the shift in question.

MOD will only be staffed when senior NASA management wish to oversee LTV activities. This would generally include personnel such as the Mission Operations Director, JSC Administrator, Associate Administrator for Human Space Flight, and NASA Administrator, or their designees. Normally, such personnel will only be present during significant activities, such as a lunar landing.

The remaining 12 positions will be staffed 24 hours a day, 365 days a year. Potentially, a Gemini-like structure could be implemented in the LTV FCR during quiescent periods, such that LIFE, TEMPER, and SABER are combined into one position (Gemini-1), STAR and PAC-MAN are combined into another (Gemini-2), and VADER, CANDIES and AT-AT are combined into a third (Gemini-3), further reducing MCC staffing to 7 during quiescent periods (The seven positions are Flight, PAO, GC, Gemini-1, Gemini-2, Gemini-3, and VEHICON.). PAO may also be unstaffed during some of these periods, reducing staffing to 6.

MPSR support will be dependent on flight phase and relevant activities for each discipline. Flight, CAPCOM, MOD, Surgeon, and PAO will assume no MPSR support specific to the LTV program. GC, EVA, ELVIS, and RAT will each have a single MPSR console. LIFE, STAR, CANDIES, EMCEE, AT-AT, DART, and HYPER will each have two MPSR positions. Finally, SABER, TEMPER, VADER, VEHICON, and PAC-MAN will each have three MPSR positions. At maximum FCR and MPSR staffing (i.e. during lunar landing or other periods of intense flight operations), and taking into account the number of shifts per day each console will operate (EMCEE, ELVIS, and RAT only staff one shift), LTV Mission Control will utilize 145 console operators, a 35-person decrease from Apollo.

Because personnel cannot spend their entire career on console – flight controllers also have office work that must be done and must also devote time to training and supporting various meetings – multiple flight control teams are required in most console disciplines. (A flight control team is three shift's worth of flight controllers.) Exceptions are CAPCOM, Surgeon, EVA, and HYPER. Because these four disciplines spend so little time on console, their flight controllers should have time to conduct other duties during their off-console periods. Additionally, DART only requires two flight control teams, due to their limited period of time on console. As a result, the entire LTV flight control employment is 372 console operators.

(These numbers do not include personnel observing at the MOD console position in either the Apollo or LTV programs.).

LTV MCC Console Configuration

In the past, shuttle flight control operators have indicated that it is sometimes a challenge finding sufficient monitor space to display all necessary data screens. This problem is increased by a drive to move console documentation and manuals online. Typically, shuttle FCR operators have two to four computer monitors at their station and can observe general information on three large projector displays at the front of the FCR. Shuttle MPSR operators typically have three to four computer monitors at their station and a television, which is often set to view either the main FCR projector display or a space-to-ground video feed. Because the LTV consists of multiple spacecraft and each MCC operator is responsible for systems on multiple vehicles, the problem of display space will be more severe. Consequently, greatly expanded video capabilities will be designed into the LTV FCR and MPSR environments.

A typical console layout for a FCR or MPSR operator will consist of three computer workstations, driving twelve 18-inch flat panel monitors. The monitors will typically (though not exclusively) be configured in a four-horizontal by three-vertical matrix. Video and data can be displayed on any of the screens, with audio directed to either the PC speaker or to the console DVIS (currently existing MCC audio network) headset. Strip chart recorders (used in Apollo, early shuttle, and X-38 MCCs) will not be used. PC-based programs such as the JSC-developed RT-Plot, used in the shuttle MCC are capable of providing the same functionality. Ten printers will be located throughout the FCR and MPSR to allow flight controllers to print hardcopies of flight data. The FCR also contains eight large wall display screens on the side and front walls for general mission data and video.

LTV MCC Facility Location

This dissertation will not attempt to precisely locate floorspace for the LTV MCC, but it is assumed that the LTV FCR and MPSR(s) (whether the MPSR is in one room or spread across several) will be located at Johnson Space Center inside Building 30, the building where shuttle, ISS, and X-38 MCC consoles are currently located. Thus, the LTV MCC will take advantage of existing physical floorspace, power, lighting, heating, ventilation, cooling, security, communications racks, walker boxes (patched cable distribution), phones, DVIS, television and facility video connections.

Chapter Eleven – Cost Estimation

11.1 Overview

The cost for space programs and projects has become increasingly dominant in the discussion of the merits and demerits of particular programs. Cost drives almost all modern space systems and strongly influences whether programs will proceed (Wertz and Larson, 1996). Proposed programs are evaluated as much, if not more, on their cost estimates as on their goals and objectives. "Conceptual designs must now account for cost, particularly for large-scale efforts" (Larson and Pranke, 1999).

There is a strong tendency, however, among both government and private agencies to not want to talk about real cost (Wertz and Larson, 1996). Unfortunately, the emphasis on cost has at times led engineers and managers to hide cost data in order to make a program appear less expensive. Costs can be buried in infrastructure costs, such as the costs of managers or engineers who are supporting the program. Complicating matters, cost data for any particular program may include or exclude data relating to launch, ground stations, operations, infrastructure costs, support personnel, or any other data that may potentially be excluded, making it difficult to compare costs for similar programs (Wertz and Larson, 1996).

As an example of cost hiding at its worst, it is commonly known that nobody knows what a Shuttle launch actually costs. Estimates can range from as low as $200 million to over $500 million (Wertz and Larson, 1996). Costs can also be buried in international cooperation. The transformation of the space station from the US Space Station Freedom to the International Space Station Alpha initially reduced American

costs (at least on paper), though the final US cost is arguably greater than that for any Freedom estimates.

While such tactics may prove useful in short-term budget battles, they have long-term negative consequences when true costs become apparent, or when frustrated legislators are unable to decipher where budgeted funds are going. A space program should only be presented as "low cost" if it truly is so. Wertz and Larson (1996) define a low cost mission as one that is "three or more times less expensive than typical missions in that class." Trailblazer does not pretend to be a "low cost" space program, though efforts are taken to minimize costs where possible. This chapter will attempt to clearly identify all relevant Trailblazer-unique expenses and compile a credible cost estimate for the LTV. The following sources of expense will be included for determining Trailblazer LTV costs:

- Communications network
- Vehicle development and production
- Spacecraft propellant
- Launch vehicles
- Mission operations

The sum of these costs will be taken to represent the cost of transporting the Trailblazer crew to and from a lunar surface base.

11.2 Communications Network Costs

As explained in chapter three, a new communications network will be necessary to support the Trailblazer program. Because NASA will need to replace the existing TDRSS anyway, this dissertation will estimate communications network costs assuming the Trailblazer's communications network is designed into the TDRSS replacement (described as FTDRSS earlier in this dissertation).

In 1995, NASA awarded a $486.1 million contract to Hughes Spacecraft for three HS-601 series satellites as TDRSS replacements (ATDRS Quicklook, 2002). With a multiplier of 2 (for six satellites instead of three) multiplied by an arbitrarily chosen inflation factor of 1.5, this number will be used as the estimate for the FTDRSS communications network cost.

However, Trailblazer will not be the sole user of FTDRSS. TDRSS currently supports shuttle, ISS, and a host of other orbiting satellites, currently including Hubble, GRO, Landsat, TOPEX, and EUVE (TDRSS Program, 2002). Consequently, some cost sharing is in order. For simplicity, it will be assumed that Trailblazer will assume the entire cost of the three L2 satellites (two active, one spare), but will bear only one-eighth the cost of the GEO constellation, allowing for equal division between the eight users of the GEO constellation. Thus, the Trailblazer cost is $486.1M multiplied by 1.5 (for the L2 satellites) plus $486.1M multiplied by 1.5 divided by 8, for a total of $820.29 million.

11.3 Vehicle Development and Production Costs

In order to estimate the costs required to actually develop and produce the LTV spacecraft designed in this dissertation, a NASA cost-estimating tool is applied to their specifications.

The NASA Advanced Missions Cost Model (AMCM) is designed to provide a useful method for quick turnaround, rough-order-of-magnitude estimating. It can be used for estimating the development and production cost of spacecraft, space transportation systems, aircraft, missiles, ships, and land vehicles (AMCM, 2002). It is maintained and used by the Cost Estimating Group at Johnson Space Center.

The AMCM uses six inputs to estimate a spacecraft's development cost based on historical data from previous space programs. The six inputs and their definitions are as follows:

1. Quantity – total number of units to be produced, including prototypes, test articles, operational units, and spares
2. Dry weight – the total empty weight of the system in pounds, not including fuel, payload, crew, or passengers.
3. Mission type – classifies the type of system by the operating environment and the type of mission to be performed
4. IOC Year – year of Initial Operating Capability, i.e. the year in which the spacecraft or vehicle is first launched
5. Block Number – represents the level of design inheritance in the system. If the system is a new design, then the block number is 1. If the estimate represents a modification to an existing design, then a block number of 2 or more may be used. For example, block 5 means that this is the 5th in a series of major modifications to an existing system.
6. Difficulty – represents the level of programmatic and technical difficulty anticipated for the new system. This difficulty should be assessed relative to other similar systems that have been developed in the past. For example, if the new system is significantly more complex than previous similar systems, then a difficulty of high or very high should be selected.

It should also be noted that engines are not included in spacecraft cost estimates and must be estimated separately. Table 11-1 indicates the inputs used for each LTV spacecraft and the resulting cost estimate.

For the Crew Module, a block number of 2 is used, assuming the X-38 CRV to be the block 1 variant. An average difficulty is selected, because most CM systems reflect little development effort. (An exception is autonomous navigation, which is accounted for in the PM1 cost.) A total of four units are to be produced: one flight article, one ground spare, and two test articles/prototypes.

For PM1, a block number of 1 is used. A high difficulty is selected, primarily because of the autonomous navigation flight software and hardware used throughout the

LTV program. It is assumed for cost purposes that the bulk of this development effort will be completed as part of PM1's development. Five units are to be produced: one flight article, one L1 spare, one ground spare, and two test articles/prototypes.

A block number of one is also selected for the ADV, with an average difficulty rating. Four units are to be produced: one flight article, one orbital spare, one ground spare/test article, and one test article/prototype. The test articles are less constrained for the ADV because most systems will be effectively tested on other LTV spacecraft, with the bulk of the ADV testing being limited to test aspects related to the lunar surface environment and ascent/descent/landing. Consequently, it is assumed a test article can be designed with the capacity to later be pressed into service, just like the space shuttle *Challenger* was (Space shuttle OV-99, *Challenger*, was originally a test article, but a decision was made to convert it to a flight vehicle. Its sister test article, OV-101, *Enterprise*, was deemed impractical to convert and was given to the Smithsonian.).

PM2 is given a block number of eight because it is at least the eighth variant of the Centaur (assuming the Centaur is selected). A difficulty rating of very low is assigned, because the modifications to the Centaur to produce PM2 are minimal and simplistic. Fifty-five flight units and two ground spares/test articles are to be produced.

The Aeroshell Module is given a block number of one and an average difficulty level. Eight flight articles, one L1 spare, and two test articles are to be produced.

The Fuel Tanker is given a block number of two, assuming PM1 to be its block one variant. It is given an average difficulty level. Forty-five flight units and two ground spares/test articles are to be produced.

The RS-72 engine is given a block number of three, assuming the current RS-72 as block two and the XLR-132 and Aestus engines (from which the RS-72 was developed) to be block one. It is given a difficulty level of very low. Sixty-five flight units are to be produced. Fifty-seven RL-10 engine flight units are to be produced, assuming a block number of 14 and a very low difficulty rating. Finally, a total of 1,136 R-4D thrusters are to be produced, assuming a very low difficulty rating and a block number of 5.

11.4 Launch Costs

The most cost effective deployment strategy must carefully consider the mass capabilities of potential launch vehicles and the associated costs with each launch system. The Atlas V and Delta IV launch families will be used for all Trailblazer launches other than transporting the lunar crew to orbit. All Earth to orbit transport flights for the crew will be conducted on the space shuttle.

Space Shuttle

In order to most effectively utilize the shuttle, the Trailblazer program must be carefully coordinated with shuttle upgrades as well as other shuttle missions. Because the shuttle is presently America's sole access to and from space, it must be available at the beginning and end of every Trailblazer mission.

The ideal solution will be to fly only one shuttle mission per lunar expedition, using upgraded versions of the Extended Duration Orbiter (EDO) capabilities on *Atlantis* and *Endeavor* to allow the same shuttle to deploy and later retrieve the Trailblazer crew. The current EDO limitation for both shuttles is 28 days (16 days on *Columbia* and *Discovery* has no EDO capability), but no shuttles have ever flown missions approaching

this length. Several 16-day EDO missions have flown, using a pallet containing four cryogenic (LH_2, LO_2) tank sets to provide extended power for the shuttle's fuel cells. The 28-day EDO kit carries eight tank sets (Braeunig, 1998).

Conceivably, increasing the 28-day EDO kit to sixteen or more tank sets could allow a shuttle to remain in orbit for 45-50 days, thus allowing it to remain in space for the entire lunar mission, from when the LTV departs LEO until it returns.

In the absence of a 45-day EDO capacity, Trailblazer will have to assume a separate shuttle mission at the beginning and end of each lunar expedition. It cannot, however, devote a billion dollars to shuttle launches (assuming $500 million per launch). Consequently, the first of the two missions will be devoted specifically to Trailblazer and will carry payload equipment for CM/PM1 servicing. It will also recover the FT2, which will have previously fueled the CM and PM1 and will be loitering nearby awaiting shuttle recovery. The second mission will simply carry an airlock capable of docking with the CM and will fly at the proper orbital altitude and inclination, but it will have a non-Trailblazer primary mission. In other words, NASA will need to identify two shuttle missions per year during the four-year Trailblazer program whose payloads can accept a shuttle flight at a 28.5-degree inclination, include payload bay volume and mass margins for the shuttle to carry an external airlock and docking port, and allow sufficient time in the mission timeline for a docking with CM/PM1 and subsequent Trailblazer crew transfer. This is both an operational as well as a financial necessity. By 2010, the shuttle program does anticipate 12-15 flights per year (as opposed to the current eight), but there would still be considerable resistance to seeing a significant portion of shuttle flights

devoted exclusively to Trailblazer (particularly considering that a large percentage will most likely continue to be consumed by ISS).

An additional possibility is dependent on the Trailblazer surface base design. If the design lends itself to much longer surface mission durations (on the order of 3-6 months) it may be possible to use each shuttle mission to launch a new lunar crew and recover a previous crew. This would, however, require additional flight articles for the Crew Module and Propulsion Module 1. This option will not be explored in this dissertation, but should be considered in a surface base design effort.

As a final option, during any Trailblazer missions where shuttle support at the end of mission is impossible, the Crew Module can always exercise the option to deorbit and land, but will need to be refurbished and launched as part of the shuttle mission that deploys the crew for the next Trailblazer mission. Between these options, it is reasonable to assume Trailblazer will only need to account for the expense of a single shuttle mission per Trailblazer expedition.

Expendable Launch Vehicles

The Atlas V and Delta IV launch families each consist of a variety of launchers designed around common cores. By varying the number of attached solid rocket boosters, upper stage engines, common cores, and payload fairing diameters, the boosters achieve a variety of different performance capabilities.

Atlas V launchers are designated Atlas xyz, where "x" denotes a 4 or 5-meter payload fairing, "y" denotes the number of attached solid rocket boosters (0 to 5), and "z" denotes the number of engines on the Centaur upper stage (1 or 2). Thus, the Atlas 552 is an Atlas V with a 5-meter diameter payload fairing, 5 attached solid rocket boosters, and

a Dual Engine Centaur (DEC) configuration. As an exception to this nomenclature, the Atlas V Heavy replaces the attached solid rocket boosters with two common cores. It does use the DEC configuration. Atlas V launch costs range from a low of $85 million for the Atlas 502 to a high of $130 million for the Atlas V Heavy (Atlas V Specifications, 2002.) Table 11-2 summarizes the payload capacities (to LEO) and launch costs for the Atlas family.

The Delta launchers are the Delta IV M, Delta IV M+ (4,2), Delta IV M+ (5,2), Delta IV M+ (5,4), and the Delta IV H. The nomenclature of each name identifies the rocket. The "M", "M+", and "H" denote medium, medium plus, and heavy, respectively. The (x,y) nomenclature identifies the size of the payload fairing and the number of attached solid rocket boosters, with "x" indicating either a 4-meter or 5-meter diameter fairing and "y" indicating either 2 or 4 solid rocket boosters. Like the Atlas V Heavy, the Delta IV H features an additional two common cores used as liquid rocket boosters. Delta IV launch costs range from a low of $70 million for the Delta IV M to a high of $140 million for the Delta IV Heavy (Delta IV Specifications, 2002). Table 11-3 summarizes the payload capacities (to LEO) and launch costs for the Delta family.

ELV Payload Assignments

Table 11-4 shows the launch masses for each LTV spacecraft and the percentage of each potential ELV's capacity required to successfully place that craft in orbit. As the table shows, some of the lighter LTV spacecraft require only a fraction of the payload capacities of the more powerful ELVs. Consequently, several spacecraft can be teamed up, launching two on one ELV. Table 11-5 repeats the above data for viable spacecraft combinations.

Trailblazer Launch Expenses

Having determined which ELVs will launch which LTV spacecraft, it is now possible to determine launch costs. All launches are not required for every mission, so it is important to keep track of which launches are necessary.

The most expensive launch phase is the initial deployment, when the reusable and spare LTV spacecraft must be deployed. Once these assets are in place, subsequent launches will only launch expendable craft and the crew, keeping in mind that every other expedition will require an additional Fuel Tanker, as described in chapter nine.

Table 11-6 lists the LTV spacecraft, launch mass, ELV, and launch costs for the initial Trailblazer mission. Table 11-7 lists the same data for subsequent even numbered missions and table 11-8 provides the same for subsequent odd numbered missions.

Given that Trailblazer is planned to be a four-year program with two missions per year, the total Trailblazer LTV launch costs are $14.56 billion, with an average of $1.82 billion per expedition.

11.5 Spacecraft Propellant Costs

The cost data accumulated so far does not include the price of fuel, which is not free and must be considered. The current prices per gallon for liquid oxygen and hydrogen are 67 and 98 cents, respectively (NASA Facts, 2001). Much more expensive, monomethyl hydrazine is $445.30 per gallon and nitrogen tetroxide is $133.35 per gallon (NASA Facts, 2001). Hypergolic fuels are so expensive because of the safety considerations associated with handling the toxic propellants.

Table 11-9 lists the fuel masses for all LTV spacecraft during the initial expedition. Table 11-10 lists the same for even numbered expeditions and table 11-11

lists fuel masses for subsequent odd numbered expeditions. Summing the fuel masses for all eight LTV expeditions reveals totals of 281412 kg N_2O_4, 150448 kg MMH, 804901 kg liquid O_2, and 134150 kg liquid H_2. Table 11-12 summarizes these masses, their volume in gallons, and the total cost for each fuel. Summing these costs reveals a total Trailblazer LTV propellant cost of $27,569,440.

11.6 Mission Operations Costs

The final step in cost estimating for the Trailblazer LTV is to determine mission operations costs. This includes mission control engineers, other support engineers, and Mission Control Center hardware and software development and maintenance.

Trailblazer will assume that Mission Control Center facility space can be made available in Building 30 at NASA – Johnson Space Center. Consequently, there will be no associated construction expenses and building heating, lighting, power, HVAC, security and maintenance will be considered to be part of existing JSC facility costs.

Mission Control Center Facility and Software Development

The development of the X-38 Vehicle 201 ground control center inside Building 30 will be used as a framework for estimating Trailblazer MCC expenses. Table 11-13 lists estimated expenses associated with its development, as compiled by JSC engineer Steve Rader, who was involved with the development. Several elements in this table are worth further discussion.

Rader indicated that this data is, "very informal data collection and does not represent any sort of formal accounting" (Rader, 2002). It is, nonetheless, useful for order of magnitude estimation.

Rader also indicated that the strip chart recorders used are not actually necessary. "Management direction was the reason for the strip chart recorders. I think they were trying to demonstrate certain capabilities. In my opinion, they are not needed" (Rader, 2002). This is reasonable, based on the shuttle MCC. Strip chart recorders were used in the early days of the shuttle program, but they have long since been replaced with RT Plot, a JSC-developed computer program that runs on flight controller workstations.

It is a relatively simple undertaking to scale this estimate to the LTV MCC. Figure 11-14 shows estimates for the LTV MCC. From this data, total cost values can be computed. However, before computing totals, a few items should be explained. Data servers, telemetry interface servers, telemetry processing servers, and network switching and communications equipment are all scaled by a factor of twelve. The reason for this is because the number of units required for these items is partially a function of spacecraft communications data rate (Rader, 2002) and the LTV has a data rate twelve times that of the X-38 Vehicle 201.

Estimates for computer support personnel also require additional explanation. The X-38 group used a four-person team for their software development. While the LTV will also use a small development team, Trailblazer will assume a twelve-person team due to the increased complexity and scope of LTV mission control functions. Additionally, because the software will be more complex, a multiplier of 5 is used to account for potential cost increases.

Despite the increased size of the LTV MCC, there is no corresponding increase in network administration personnel, based on the recommendations of several computer scientists. IBM staff software engineer Troy Howard suggests that network

administration should require no more than a few personnel (Troy Howard, 2002). He cautions, however, that properly designed configuration and maintenance of the network is critical to avoid placing incredible workload burdens on the network administrators, thus driving up staffing requirements.

"If the network grows in an ad-hoc fashion, it could take as much as one administrator per ten machines to keep everything running. With proper planning and design, it should be possible to maintain the entire system with a fixed number of administrators, any more than five seems excessive" (Troy Howard, 2002). Use of hard drive imaging is no more labor intensive than network booting and is much less dependent on network conditions. It is orders of magnitude less labor intensive and error prone than local installation and configuration (Troy Howard, 2002).

NC A&T Director of Web Support Services, Robin Howard, recommends two people, because it is important to always have a backup. "If it is a crisis if the network goes down, then twenty-four hour support is necessary. However this does not mean that the administrator has to be onsite" (Robin Howard, 2002).

Cary Burnette, Senior Network Analyst for North Carolina A&T State University, states, "One person should be able to handle it [MCC network administration] as long as you're not doing a bunch of updates" (Robin Howard, 2002).

Anthony Grice, NC A&T Network Research Administrator, states that if you ghost the computer hard drives (meaning the same software configuration on all hard drives), one person can handle it. He recommends a metric of one network engineer for every 50-60 people (Robin Howard, 2002).

To this end, the MCC CANDIES FCR and MPSR console operators will serve as a backup to the two network administrators. The CANDIES operator is by definition also a network administrator – responsible for the LTV onboard network – and can consequently provide immediate response to a MCC network failure while the MCC administrator(s) are being called in.

The total cost for hardware and software acquisition and development is the sum of the 2.5 year software development ($22,875,000) and the hardware/software acquisition cost ($3,224,500), for a total of $26,099,500 in one-time expenses. To determine the total MCC cost, annual operations costs must be added to this figure. The annual software operations cost of $857,280 must be carried over the 2.5 development years and the 4 years of Trailblazer operations, for a total of $5,572,320. This adds to the one-time expenses to yield a total MCC cost of $31,671,820.

Flight Controller and other Personnel Expenses

In addition to the expenses associated with developing and maintaining the Mission Control Center, costs must also be included for the MCC flight controllers and other engineers and managers who support the program.

Chapter ten described in detail the flight control positions involved in the Trailblazer LTV. Table 11-15 lists the FCR console positions, associated MPSR positions, days per year the console position is staffed, number of employees assigned to that position (group size), and the total salary for that group of employees. The salary is determined by the average salary of JSC Mission Control engineers, which is currently $86,452 These salaries are summed to give a MCC flight controller annual salary and then multiplied by 1.5 to estimate employee benefits, giving a total annual figure of

$48,240,216 Other non-MCC Trailblazer expenses incurred by JSC's Mission Operations Directorate are sized at twice the flight controller expense, for a total of $96,480,432 Engineering Directorate support is estimated at five times the flight controller expense, for a total of $241,201,080 Finally, a miscellaneous expense category is estimated at fifteen percent the flight controller expense, yielding $7,236,032 These expenses sum for a total annual mission operations personnel and miscellaneous budget (excluding MCC construction and software maintenance discussed in the previous section) of $465,518,084 which sums over four years of Trailblazer operations for a total mission operations personnel and miscellaneous cost of $2,793,108,506.

Mission Operations Cost Summary

Adding the mission operations personnel and miscellaneous cost to the MCC cost of $31,671,820 gives a total mission operations cost of $2,824,780,326.

11.7 Cost summary

Summing cost totals in each of the previous sections yields a total Trailblazer LTV program cost of $40.37 billion. Tables 11-16 and figure 11-3 summarize the Trailblazer LTV costs. Table 11-17 shows the Trailblazer LTV cost by fiscal year, indicating the annual budget NASA would need to allocate to Trailblazer to make the LTV mission happen. These costs only reflect the Trailblazer LTV and do not include surface base expenses, such as facility development, component launch and deployment, surface operations or resupply expenses. The costs do include, however, all expenses related to getting two astronauts from the surface of Earth to the surface of the Moon and back.

In an intriguing non-space-related comparison, the Forbes 400 list recently reported the net worth of Bill Gates at $43 billion (The Forbes Four Hundred, 2002). The second and third runners, Warren Buffett and Paul Allen, respectively have a net worth of $36 and $21 billion (The Forbes Four Hundred, 2002). The net worth of Gates and Allen consists primarily of stock in Microsoft, and Buffett's net worth is primarily in the stock of Berkshire Hathaway. The cash equivalent of the net worth of an individual (albeit the nation's richest) could potentially single-handedly finance multiple lunar expeditions, though this point is not made to suggest such a course of action. Dr. Robert Howard, Sr., Associate Professor of Finance at North Carolina A&T State University, points out that "an attempt to liquidate completely the holdings of either of these individuals to provide funds for a lunar expedition would be highly unlikely. Such a large scale sale of securities over a short period of time would greatly depress the market price of the securities being sold, and wipe out a large portion of the reported net worth; these individuals would have to give up control of the financial empires they have spent a lifetime building and managing; and other investors who watch these individuals closely would also attempt to sell their shares, causing serious disruptions in the financial markets" (Robert Howard, Sr., 2002). These figures are noteworthy, however, in that they suggest the expenses of lunar travel and the financial assets of American entrepreneurs are nearing a point where viable business models may be developed and successfully implemented to create new industries or expand current operations. According to Dr. Howard, Sr., "such models could include new advertising approaches, the application of processes and techniques used in lunar travel to earthly pursuits, and the development of new products and services (Robert Howard, Sr., 2002)."

By comparison with other space programs, the cost for the Apollo program was $167.8 billion in FY97 dollars (Reynerson, 2000). On the surface, Trailblazer may not appear to compare as favorably with more recent lunar proposals: HLR claimed a $2.5 billion mission cost for an initial expedition and Duke's Lunar Reference Strategy claimed a $2.6 billion mission cost for the same (Portree, 2002). Extrapolating these out to eight missions to compare with Trailblazer yields costs of $20 and $20.8 billion respectively. (Technically, they would most likely claim lower costs as the $2.5 and $2.6 billion figures presumably included some infrastructure costs that would not be repeated in subsequent missions.) However, applying the Advanced Missions Cost Model to either program produces interesting results. The HLR Lunar Orbit Stage (LOS) masses 15,600 kg (Portree, 2002). According to the AMCM, a single block one, very high difficulty spacecraft with a 2010 IOC will cost $9.2 billion. A very high difficulty is selected because the LOS requires a reusable heat shield for its aerocapture return from lunar orbit. Currently, there is no material in existence that could serve as such a heat shield. It should also be noted that the AMCM $9.2 billion figure is just the production cost of the LOS, and does not include the HLR surface habitat, two shuttle launches, three Proton launches, an ISS Z2 truss (so that ISS can support HLR missions), a Lunar Landing Vehicle, a propellant carrier/transfer system, the habitat lander, Trans-Lunar Injection Stage 1, Trans-Lunar Injection Stage 2, or mission operations, all of which are supposedly included along with the LOS for the $2.5 billion estimate.

Duke's strategy is similar. Among other systems, he uses an 8,000 kg X-38 CRV and two 8,000 kg Lunar Based Vehicles (LBVs) (Portree, 2002). It is highly questionable as to whether his CRV can be as light as he claims, but for the moment an

AMCM analysis will be performed taking his mass estimate at face value. However, this CRV must either accept the same very high difficulty as the HLR LOS (because it also assumes a nonexistent reusable TPS for aerocapture) or it must be non-reusable, in which case eight CRVs are required in order to compare with Trailblazer. In the former case, AMCM predicts a cost of $4.67 billion and in the latter case AMCM predicts a cost of $6.64 billion. Additionally, AMCM predicts a cost of $3.73 billion for the two LBVs (which must somehow solve the problem of cryogenic propellant storage in their development as they use liquid hydrogen and liquid oxygen). In Duke's $2.6 billion estimate, he only allocated $700 million for the development and production of the CRV and both LBVs, along with a lunar surface fuel processing plant and a lunar surface habitat, spending the remaining $1.9 billion on three shuttle launches (at $300 million each), solar electric propulsion ($500 million) and nuclear power source development ($500 million). Keep in mind these AMCM estimates do not allow for developing any spare vehicles or test articles, just the flight units.

When compared under the same cost models, Trailblazer LTV spacecraft compare favorably against modern lunar LTV concepts, and do not suffer the same penalties of reliance on not-yet-developed materials, nonexistent launch vehicles, or other dubious capabilities.

Chapter Twelve – Discussion and Implications

12.1 Overview

The conceptual design work in this dissertation demonstrates that it is possible to develop a lunar transfer vehicle within the constraints of existing technology and without relying on the availability of super-heavy lift boosters. At less than $5 billion a year, Trailblazer is clearly within reasonable budget levels and does not represent an extraordinary program on the level of Apollo. Clearly, human lunar travel is feasible now, without waiting for the development of a super-heavy lift booster.

12.2 Discussion of Design Details

LTV Summary

In order to conduct human spaceflight from Earth to the moon, an X-38 derived Crew Module is used, propelled by a hypergolic Propulsion Module 1 and a Cryogenic Propulsion Module 2 to lunar orbit, with a stop at L1 to change propulsion systems from PM2 to PM1. There, the crew transfers to an Ascent Descent Vehicle for the ride down to the lunar surface. After the surface mission, the crew rides the ADV back into orbit, where the CM and PM1 return to L1 to join up with an Aeroshell Module. Leaving L1, the CM/PM1/AM travel to Earth, where the AM uses its heat shield to protect the crew during aerocapture. Following aerocapture, the AM is discarded and the crew enters low Earth orbit. Fuel Tankers are used to refuel the CM, PM1, and ADV throughout the mission. Space shuttles are used to transfer the crew between the surface of the Earth and Earth orbit. A network of Boeing 702 TDRSS satellites in GEO and orbiting the Earth-Moon L2 provide communications relay services. This architecture is intended to serve

as the human transportation link for a lunar return program designed to conduct eight missions over the course of four years, beginning in fiscal year 2010. Starting with FY 2003, this program would require less than a $5 billion increase in NASA's annual budget through program completion at the end of FY 2013.

Program Cost

Clearly, the cost of this program is intimidating to some extent. But it must also be recognized that any cost figure for a lunar mission will be intimidating. A small number, such as that proclaimed by HLR is intimidating in the sense that it is not credible, while a larger number is intimidating for its sheer value.

In order to keep costs from escalating out of control, small management infrastructures must be maintained throughout the program's existence. Minimizing the number of organizational interfaces has been shown in many case studies to be key to reducing costs (Wertz and Larson, 2002). The small team approach used by the X-38 project is widely recognized as having contributed to minimizing costs in that program.

12.3 Satisfaction of Trailblazer LTV Requirements and Constraints

Assume no heavy launch vehicle development

The LTV does not assume any new classes of heavy launch vehicles and the return to Saturn V class capabilities is not required for Trailblazer LTV flight operations.

Assume available launch vehicles will be limited to existing vehicles

In addition to not requiring heavy launch vehicles, the LTV can be deployed with the existing national launch infrastructure. The shuttle, Atlas, and Delta are sufficient and additional vehicles in their classes are not necessary.

Minimize the development of new space vehicles

The Trailblazer component spacecraft are existing spacecraft where possible: e.g. X-38 Crew Module, Centaur PM2, Boeing 702 TDRSS. Those that are new spacecraft

(PM1, ADV, AM, FT) are all developed from existing components. No technology breakthroughs are required for any LTV spacecraft.

Develop intelligent navigation systems with maximum possible versatility

The Deep Space One autonomous navigation system is incorporated as a navigation system baseline for LTV spacecraft. Use of autonomous navigation allows a common navigation system architecture for the vehicles and minimizes the number of flight specific alterations that must be made to flight software on each vehicle.

Have the ability to receive ISS and STS support but be capable of operating with neither

The Trailblazer LTV is fully independent of ISS and is actually a more optimal solution without the use of the station. It does, however, require some shuttle support, as the shuttle is currently the only American vehicle capable of placing humans in space. Once a crew has been transferred to the Trailblazer LTV, however, it can complete its mission without further STS support if necessary (though there is a small cost increase if the shuttle cannot recover the LEO fuel tanker). If a crew transfer vehicle (another possible design adaptation to the basic X-38 spaceframe) were placed on the top of a Delta or Atlas rocket, however, Trailblazer could operate without shuttle support. A manned Delta or Atlas, however, is not considered an existing launch vehicle. Thus Trailblazer is not and cannot be in full compliance with this constraint because it requires one shuttle launch at the beginning of every mission. Trailblazer development would require relaxation of this constraint to allow for such shuttle usage.

No more than $3-6 billion increase in NASA annual budget for Trailblazer LTV activities

Cost estimates show an annual increase below $5 billion, fully satisfying this requirement.

Five to ten year development timeline from concept to first crew landing

Assuming a commitment in 2003, the first lunar mission takes place in 2010, seven years later. The cost estimating parametrics are in part a function of the time from concept to deployment and provide a level of estimation regarding the effort necessary to produce operational vehicles within this timeframe.

Ten year design lifetime

A specific lifetime is not specified, but the entire scope of the Trailblazer mission is intended to be completed within four years of the initial launch, suggesting the vehicles will be retired long before their service life is over.

United States mission with limited or no foreign participation

The Trailblazer LTV is composed of US-developed spacecraft and does not require significant foreign contributions.

Minimize ground operations support team (flight controllers, program offices, etc.).

While the LTV mission control team is not a "small" team by any standards, it is a reduction from Apollo and a more efficient utilization of flight controller resources than shuttle or ISS. In shuttle and ISS programs, flight controllers in specific disciplines are only responsible for that system on one vehicle, while in Trailblazer, flight controllers are responsible for their particular systems on all deployed Trailblazer vehicles. Onboard automation and autonomy allows for the increase in flight controller responsibility without adding additional personnel.

12.4 Conclusions

1. A series of eight lunar missions can allow NASA to begin to develop a lunar infrastructure, evaluate the potential of the lunar south pole for commercial and government use, and develop standards for use in future lunar base operations.

2. The limitation to use existing launch vehicles and other trajectory limiting factors do not prevent human lunar transfer, but they do impose severe restrictions on the method of transfer, forcing a modular approach, very small crew sizes, and the use of a double rendezvous staging trajectory.
3. The Earth-Moon L1 point is a viable location for storage of various LTV component spacecraft and is an ideal rendezvous location.
4. NASA's TDRSS can be upgraded to serve as a cislunar communications system by placing three TDRSS satellites in L2 orbit.
5. Magnetic capture systems can reduce the risk and impact loads of spacecraft dockings.
6. The X-38 can be adapted to serve as a crew module for a crew of two.
7. Radiation shielding is necessary to protect the crew from the possibility of fatal exposure to solar particle events.
8. A high performance propulsion module can be developed around the Centaur upper stage, but it must be used within a few hours of launch
9. The Centaur can optionally be replaced with the Delta 4-2, but a performance penalty is incurred because current launch vehicles cannot place a fully fueled Delta 4-2 in orbit.
10. A storable, lower performance propulsion module and a fuel tanker can be developed using the RS-72 engine. This engine can also be used as an X-38 deorbit engine and a lunar ascent/descent engine.
11. A derivative of the TransHab inflatable structure can be used to reduce the mass of a lunar lander while still providing the crew with some protection.

12. There is no need for the lander to be pressurized, except during crew transfer from the CM to the ADV.
13. Aerodynamic braking in the form of aerocapture is a viable method for Earth capture of the LTV at the end of a lunar transfer mission.
14. Propulsion limitations force the aeroshell to be a separate module and not part of individual modules' spaceframes.
15. Such an aeroshell module is within the abilities of present-day technology, including all heat shield materials.
16. The aeroshell is not reusable and must be replaced for each mission.
17. Similarly, it is more cost effective to discard and replace fuel tankers sent beyond LEO than to return them to Earth for servicing and reuse. The fuel tanker sent to LEO can be recovered and reused.
18. A single mission control center can provide flight control operations for all LTV spacecraft.

12.5 Future Work

While this dissertation has successfully demonstrated the viability of cislunar travel with present-day systems, many key areas deserve further investigation. Some areas are appropriate for university pursuits; others will require resources or access possible only within NASA or contractor organizations.

To complete the Trailblazer research effort, a conceptual design should be performed for the Trailblazer surface base and its resupply link. With that effort, an overall cost estimate can be performed for the entire Trailblazer program. It should be noted that the surface base design might significantly increase the surface mission

duration above the one-month baseline, with ripple effects throughout the LTV design. It might also prove beneficial to place some resupply systems under the control of LTV Mission Control. Thus, cost and other factors may experience an increase or decrease. (An increase in surface mission duration may or may not increase LTV costs, depending on how end of mission crew recovery is impacted.)

Low thrust electric propulsion engine design and weak stability boundary trajectories must also be thoroughly investigated. Significant cost reductions could potentially be realized through the use of weak stability boundary trajectories and/or low thrust for AM and FT deployment missions, using those methods to replace PM2. It is further strongly suspected that the additional flights required for the surface base resupply and expansion will overwhelm the Delta and Atlas launch capacity unless weak stability boundary and/or low thrust methods are used, thereby eliminating the need for PM2 flights in support of the surface base.

This will not, however, eliminate all uses of PM2. It will still be required for the CM, and potentially also for PM1. The precise mass impact of converting Centaur and Delta 4-2 stages to PM2 should be studied, as well as cryogenic boiloff rates.

The autonomous optical navigation system described in this dissertation should be more thoroughly developed. Deep Space One validated autonomous navigation technology applications beyond lunar orbit, but there is a need for experimental data in the cislunar environment. Also in the area of navigation, space-based experiments should be conducted to determine the maximum usable ranges beyond LEO for GPS signal reception and resulting attitude and position determination.

Design and test work for the MDAS should continue, including space evaluations on the shuttle and ISS. While not vital, another potentially useful ISS/shuttle flight experiment would be to develop and flight certify Iridium or other satellite phones that can be used in LEO.

A detailed study of Atlas, Delta, and shuttle launch processing facilities should be conducted in order to verify that existing facilities can process LTV spacecraft. It is expected that some modifications will be necessary for the Aeroshell Module. These modifications should be quantified with cost estimates.

The AFE program needs to be revisited and flown with a variety of aeroshell configurations. There is a pressing need for more experimental data for entry aerodynamics in order to develop analytical tools for use in mission and vehicle design. In particular, AFE experiments should examine the performance of SIRCA under simulated or actual lunar return velocities. It is possible that SIRCA might be reusable at the heat fluxes experienced by the LTV. Because there is insufficient data to make a determination, Trailblazer assumed it would not be reusable. If so, significant cost savings can be achieved by eliminating the replacement of the AM every lunar mission. Additional research should also continue in the area of reusable high temperature TPS.

Flight stability studies should be conducted for the AM, particularly determining its stability and handling characteristics during entry and verifying that the R-4D thrusters will allow for sufficient controllability during entry.

Docking dynamics for the AM should also be studied, including rate dampening, bending moments, and torsional loads. Load analyses should also be performed on all

array wings in order to refine mass estimates and ensure that array wings can support vibrations and forces experienced during engine burns.

Some mass reductions could potentially be achieved on the ADV through the design and use of a more optimized LIDAR than by simply incorporating the Clementine LIDAR.

With respect to the lunar communications architecture, it would be useful to verify that Boeing can supply 702 series satellites capable of processing 12 Mbps data rates with multiple spacecraft positioned between Earth and lunar orbits. It might also prove useful to see if the Boeing 702s can be adapted to serve as a rudimentary radio navigation system, as a crude cislunar version of GPS.

In addition to the above technical research, it is also important to conduct future research in the area of space program management. Many of the cost overruns that have plagued major space projects are directly attributable to program management. Conversely, many of the successful low cost missions can directly attribute their cost savings to various deviations from traditional management structures. A uniform approach to program management, however, does not exist at this point in time.

Finally, it is clear from a review of lunar design efforts, that there are no established standards for the conceptual design of human space systems. This has resulted in incomplete concepts, embarrassingly poor estimates of vehicle masses and propulsion requirements, arbitrary and unrealistic cost and manpower estimates, and has effectively guaranteed that proposals would not get funded for development. The inability of the space community to produce credible conceptual design work has hindered every major space project since Apollo (the only reason Apollo was not

adversely affected was the political climate of the time). Significant research needs to be devoted to developing a structured, credible spacecraft conceptual design methodology and the appropriate academic infrastructures need to be established to train the nation's space professionals.

List of References

List of References

1. Advanced Missions Cost Model. Internet site: http://www.jsc.nasa.gov/bu2/AMCM.html. 2002.

2. Air Data System. Internet site: http://spaceflight.nasa.gov/shuttle/reference/shutref/orbiter/avionics/gnc/ads.html. 2002.

3. Air Force Research Laboratory Public Affairs. Air Force to Use Pentium Microprocessor in Space. Press Release No. 98-42. Kirtland AFB, NM. December 8, 1998.

4. Almaz, Part 1. Encyclopedia Astronautica. Internet site: http://www.astronautix.com/articles/almpart1.htm. 2002.

5. Almaz, Part 2. Encyclopedia Astronautica. Internet site: http://www.astronautix.com/articles/almpart2.htm. 2002.

6. Apollo 11 Reunion Committee. Flight Operations Reunion for the 20th Anniversary of the First Manned Lunar Landing. Reunion Booklet. 1989.

7. Apollo LM CSD. Encyclopedia Astronautica. Internet site: http://www.astronautix.com/craft/apolmcsd.htm. 2002.

8. APW II Features. Internet site: http://ic-www.arc.nasa.gov/ic/projects/PCA/apw2.html. 1995.

9. ATDRS Quicklook. Internet site: http://samadhi.jpl.nasa.gov/msl/QuickLooks/atdrsQL.html. 2002.

10. Atlas Launch System Mission Planner's Guide, Atlas V Addendum. Revision 8. Lockheed Martin, International Launch Services. December 1999.

11. Atlas Launch System Mission Planner's Guide. Revision 9. Lockheed Martin, International Launch Services. September 2001.

12. Atlas V Family. International Launch Services. Internet site: http://www.ilslaunch.com/atlas/atlasv/. 2002.

13. Atlas V Specifications. Internet site: http://www.spaceandtech.com/spacedata/elvs/atlas5_specs.shtml. 2002.

14. Autonomous Navigation. Internet site: http://nmp.jpl.nasa.gov/ds1/tech/autonav.html. 2002.

15. Bertin, John J. Hypersonic Aerothermodynamics. AIAA. Washington, D.C. 1994.

16. Blue Flight Control Room. Internet site: http://spaceflight.nasa.gov/station/reference/bluefcr/bfcr.html. 2002.

17. Boden, Daryl G. and Larson, Wiley J (Eds.). Cost-Effective Space Mission Operations. New York: McGraw-Hill, Inc. 1996.

18. Bosworth, Michael L. The Rise and Fall of 15th Century Chinese Seapower. Internet site: http://www.cronab.demon.co.uk/china.htm. 1999.

19. Braeunig, Robert. Space Shuttle. Internet site: http://users.commkey.net/Braeunig/space/specs/orbiter.htm. 1998.

20. Brown, Charles D. Spacecraft Mission Design. Reston, VA: American Institute of Aeronautics and Astronautics. 1998.

21. Campbell, Paul D. Human Engineering Lessons Learned from NASA-MIR and International Space Station Programs. Human Space Transportation and Exploration Workshop. 2000.

22. Carlisle, George. Email: gcarlisle@mail1.jpl.nasa.gov; May 23, 2002.

23. Celestis, Inc. Internet Site: http://www.celestis.com/services.html. 2002.

24. Cerimele, Christopher J. Email: christopher.j.cerimele1@jsc.nasa.gov. July 5, 2002.

25. Cerimele, Christopher J. Email: christopher.j.cerimele1@jsc.nasa.gov. March 5, 2002.

26. Chapman, D.R. "An Approximate Analytical Method for Studying Entry into Planetary Atmopsheres." NACA TN 4276. May 1958.

27. Clementine HIRES Camera Performance Specifications. Internet site: http://wwwflag.wr.usgs.gov/USGSFlag/Space/clementine/nasaclem/sensors/hires/hires_table.html. 2002.

28. Clementine Laser Rangefinder (LIDAR). Internet site: http://wwwflag.wr.usgs.gov/USGSFlag/Space/clementine/nasaclem/sensors/lidar/lidar.html. 2002.

29. Clementine LIDAR Performance Specifications. Internet site: http://wwwflag.wr.usgs.gov/USGSFlag/Space/clementine/nasaclem/sensors/lidar/lidar_table.html. 2002.

30. Cooke, Douglas R., Weary, Dwayne P., Kaplan, David I. Analysis of the Synthesis Group's Mars Exploration Architecture. NASA – Johnson Space Center. October, 1991.

31. Cost for OMS Fuel. Internet site: http://quest.arc.nasa.gov/space/ask/launch/Cost_for_OMS_fuel.txt. July 15, 1997.

32. CT-63X Star Sensor. Ball Aerospace. Internet site: http://www.ball.com/aerospace/ct63x.html. 2002.

33. Curry, Don. Email: donald.m.curry1@jsc.nasa.gov. June 4, 2002.

34. Curry, Don. Email: donald.m.curry1@jsc.nasa.gov. June 6, 2002.

35. Delta III Payload Planners Guide. MDC 00H0057. The Boeing Company. October 2000.

36. Delta IV Launch Vehicles. Boeing. Internet site: http://www.boeing.com/defense-space/space/delta/delta4/delta4.htm. 2002.

37. Delta IV Payload Planners Guide. MDC 00H0043. The Boeing Company. October 2000.

38. Delta IV Specifications. Internet site: http://www.spaceandtech.com/spacedata/elvs/delta4_specs.shtml. 2002.

39. Dempsey, Phillip. Email: john.p.dempsey1@jsc.nasa.gov. June 21, 2000.

40. Desautel, Dick. Analytical Characterization of AOTV Perigee Aerothermodynamic Regime. Thermal Design of Aeroassisted Orbital Transfer Vehicles. H.F. Nelson, Editor. Progress in Astronautics and Aeronautics. Volume 96. AIAA. New York. 1985.

41. Dione. Internet Site: http://seds.lpl.arizona.edu/nineplanets/nineplanets/dione.html. 1997.

42. Dura Magnetics, Inc. Rectangular Electromagnets. Internet site: http://www.duramag.com/electro/rectang.htm. 2002.

43. Eckart, Peter. Spaceflight Life Support and Biospherics. Torrance: Microcosm. 1996.

44. Eckart, Peter. The Lunar Base Handbook. New York: McGraw-Hill, Inc. 1999.

45. Elements of Design Review for Space Systems. NASA SP-6502. 1967.

46. Exploring the NASA Workforce. Internet site: http://naade02.msfc.nasa.gov/workforce/. 2002.

47. Fact Sheet on Hot Water Scalds. Medialaunch. Internet site: http://www.medialaunch.com.au/49/GENERIC.html. September 8, 1999.

48. Fletcher, David. Human Lunar Destiny: Past Present and Future. Return to the Moon IV. July 18-20, 2002. Houston, Texas.

49. Fortescue, Peter and Stark, John (Eds.). Spacecraft Systems Engineering. John Wiley & Sons Ltd. Chichester, England: 1995.

50. Frequently Asked Questions: Remote Agent Experiment. Internet site: http://nmp.jpl.nasa.gov/ds1/tech/autoraFAQ.html. 2002.

51. Geochemistry. Internet site: http://lunar.arc.nasa.gov/science/geochem.htm. 2001.

52. Griffin, Michael D. and French, James R. Space Vehicle Design. Washington, D.C.: American Institute of Aeronautics and Astronautics, Inc. 1991.

53. Gupta, Roop N.; Jones, Jim J.; Rochelle, William C. Stagnation-Point Heat-Transfer Rate Predictions at Aeroassist Flight Conditions. NASA TP-3208. September 1992.

54. Hammond, Walter E. Space Transportation: A Systems Approach to Analysis and Design. Washington, D.C.: American Institute of Aeronautics and Astronautics, Inc. 1999.

55. Hoffman, David A. Station-keeping at the Collinear Equilibrium Points of the Earth-Moon System. JSC-26189. Engineering Directorate, Systems Engineering Division. NASA-Johnson Space Center. September 1993.

56. Howard, Jr., Robert. "Performance Benefits of Utilizing Lunar Fuel in Support of Human Interplanetary Space Missions." Proceedings of Human Space Transportation and Exploration Workshop. AIAA. 1999.

57. Howard, Jr., Robert. A Knowledge-Based Engineering Approach to Manned Spacecraft Cabin Design Layout. Masters Thesis. North Carolina A&T State University. Greensboro, NC. 1997.

58. Howard, Robin. Email: rhoward@ncat.edu. August 14, 2002.

59. Howard, Sandra. Email file attachment (Word document): robynne_33@yahoo.com. September 22, 2002.

60. Howard, Sr., Robert. Email: roberth@ncat.edu. September 20, 2002.

61. Howard, Tamara. Email: violet639@yahoo.com. September 20, 2002.

62. Howard, Troy. Email: tahoward@us.ibm.com. September 15, 2002.

63. ILS Press Release. "Inaugural Atlas V Scores Success for ILS, Lockheed Martin." International Launch Services. Internet site: http://www.ilslaunch.com/newsarchives/newsreleases/rec197/. 2002.

64. International Space Station Flight Crew Integration Standard. NASA-STD-3000/T. Revision B. NASA – Johnson Space Center. August 1995.

65. Jarrett, Stephen, Commander, USN. The Application of Submarine Experience and Technology to the Space Environment. Naval War College. March, 1992.

66. Kaplan, Marshall. Modern Spacecraft Dynamics and Control. John Wiley and Sons. New York. 1976.

67. Kowal, T.J. Email: t.j.kowal1@jsc.nasa.gov. March 5, 2002.

68. Larson, Wiley J. and Pranke, Linda K (Eds.). Human Spaceflight Mission Analysis and Design (Draft). New York: McGraw-Hill, Inc. 1999.

69. Larson, Wiley J. and Wertz, James R (Eds.). Space Mission Analysis and Design. Torrance, CA: Microcosm, Inc. 1992.

70. Laser Mapping & Navigation System. Internet site: http://www.activrobots.com/ACCESSORIES/laser.html. 2002.

71. Lithium Power Technologies, Inc. Technologies. Internet site: http://www.lithiumpower.com/technologies.htm. 2002.

72. Loh, W.H.T., Ed. Re-entry and Planetary Entry Physics and Technology. Vol. 1. Springer-Verlag. 1968.

73. Man/System Requirements for Weightless Environments. MSFC-STD-512A. December 1976.

74. Man-System Integration Standards. NASA-STD-3000. August 1994.

75. MAP Status 1. Internet Site: http://map.gsfc.nasa.gov/m_mm/ms_status.html. 2002.

76. MB-XX Upper Stage Propulsion System. Internet site: http://www.boeing.com/defense-space/space/propul/mb60.html. 2002.

77. Microgravity Research Experiments (MICREX) Database. On Orbital Refueling System (ORS) Flight Demonstration. Internet site: http://mgravity.itsc.uah.edu/microgravity/micrex/exps/gri-017.html. 2002.

78. Miniature Inertial Measurement Unit (MIMU). Brochure. Honeywell. Space Systems. March 2001.

79. Mini-Dual Earth Sensor. Internet site: http://www.servo.com/midestd.htm. 2002.

80. Mir Wireless Network Experiment. Internet site: http://ic.arc.nasa.gov/ic/projects/WNE/. 1997.

81. Mir Wireless Network Experiment. Internet site: http://spaceflight.nasa.gov/history/shuttle-mir/science/iss/sc-iss-mwne.htm. 1999.

82. Mode Identification and Recovery. Internet site: http://ic.arc.nasa.gov/projects/remote-agent/MIRtext.html. 2001.

83. N2O4/MMH. Astronautix. Internet site: http://www.astronautix.com/props/n2o4mmh.htm. 2002.

84. National Aeronautics and Space Act of 1958, Pub. L. No. 85-568, As Amended. Internet site: http://www.hq.nasa.gov/ogc/spaceact.html. 2002.

85. National Aeronautics and Space Administration Budget for Fiscal Year 2002. Internet site: http://www.whitehouse.gov/omb/budget/fy2002/nsa.pdf. 2002.

86. Neuhaus, John. Extremely High Frequency. Internet site: http://www.jneuhaus.com/fccindex/30_ghz.html. September 10, 2001.

87. O'Neil, Mark J., Piszczor, Michael F., Eskenazi, Michael I., McDanal, A.J., George, Patrick J., Botke, Matthew M., Brandhorst, Henry W., Edwards, David L., & Jaster, Paul A. The Stretched Lens Array (SLA): An Ultra-Light Photovoltaic Concentrator. SPRAT XVII. NASA Glenn Research Center. September 2001.

88. Oberg, Jim. Space Power Theory. Draft. 2002.

89. Patrick, Joeletta O (Telephone Interview.). Electrical Engineer, Spacecraft Time Phase Electrical Loads Analysis and Resources Group. NASA, Johnson Space Center. July 8, 2002.

90. Portree, David. Romance to Reality: Moon & Mars Plans. Internet Site: http://members.aol.com/dsfportree/explore.htm. 2002.

91. R-4D Engine. Bipropellant Product Flysheets. General Dynamics. 2002.

92. R-4D. Encyclopedia Astronautica. Internet Site: http://www.astronautix.com/engines/r4d.htm, 2002.

93. Rader, Steve. Email: steven.n.rader1@jsc.nasa.gov. August 9, 2002.

94. Rader, Steven. Email: steven.n.rader1@jsc.nasa.gov. August 12, 2002.

95. Radiation Hazards to Crews of Interplanetary Missions: Biological Issues and Research Strategies. Internet site: http://www.nationalacademies.org/ssb/besrmenu.html. National Academy of Sciences. 2002.

96. Real-Time Flush Air Data System. Internet site: http://www.dfrc.nasa.gov/Projects/SRA/fads.html. 2001.

97. Reynerson, Charles M. Human Space System Modeling: A Tool for Designing Inexpensive Moon and Mars Exploration Missions. Human Space Transportation and Exploration Workshop. 2000.

98. RS-72 Engine. Boeing. Internet site: http://www.boeing.com/defense-space/space/propul/rs72.html. 2002.

99. Schaefer, Stan. Email: stanley.j.schaefer1@jsc.nasa.gov. July 11, 2002.

100. Schneider, William C., Nagy, Kornel, and Schliesing, John A. Magnetic Docking Aid for Orbiter to ISS Docking. 30th Aerospace Mechanisms Symposium. NASA CP 3328. May 1996.

101. Schrunk, D., Thangavelu, M., Cooper, B., and Sharpe, B. "A Coherent Vision for Space Exploration and Development in the 21st Century." Proceedings of the 2000 Lunar Development Conference. Space Front Press. 2000.

102. Schrunk, David, Sharpe, Burton, Cooper, Bonnie, and Thangavelu, Madhu. The Moon: Resources, Future Development, and Colonization. New York: John Wiley & Sons, Ltd. 1999.

103. Scott, Carl D.; Ried, Robert C.; Maraia, Robert J.; Li, Chien-P.; Derry, Stephen M. An AOTV Aeroheating and Thermal Protection Study. Thermal Design of Aeroassisted Orbital Transfer Vehicles. H.F. Nelson, Editor. Progress in Astronautics and Aeronautics. Volume 96. AIAA. New York. 1985.

104. Seifert, Howard (Ed.). Space Technology. New York: John Wiley & Sons, Inc. 1959.

105. Sherman, M.M. Entry Thermal Protection. NASA SP-8014. August 1968.

106. Shuttle Mission Control Center. Internet site: http://spaceflight.nasa.gov/shuttle/reference/mcc/mcc.html

107. Sietzen, Frank. "Conversations with Bill Nelson". Aerospace America. AIAA. August 2002.

108. SIGI – Space Integrated GPS/INS. Brochure. Honeywell. Space Systems. November 2000.

109. SOHO. Internet Site: http://sohowww.nascom.nasa.gov/. 2002.

110. Space Radiation Health Newsletter. Internet site: http://srhp.jsc.nasa.gov/Newsletter/Volume1-2/Index.html. April 2001.

111. Space Shuttle Use of Propellants and Fluids. NASA Facts. Kennedy Space Center. FS-2001-09-015-KSC. September 2001.

112. Spexarth, Gary R. Email: gary.r.spexarth1@jsc.nasa.gov. August 15, 2002.

113. Squire, Thomas. Email: tsquire@mail.arc.nasa.gov. June 6, 2002.

114. Stakem, Patrick H. Flight Linux Project Target Architecture Technical Report. QSS Group, Inc. Revised December 15, 2001.

115. Star Wars Continues To Drive Space Technology. Space Daily. Internet site: http://www.spacedaily.com/news/battery-00c.html. April 26, 2000.

116. Surrey Satellite Technology, LTD. 2-Axis Sun Sensor. Internet site: http://www.sstl.co.uk/datasheets/Sun%20Sensor.pdf. 2002.

117. Szalai, Christine. Email: cszalai@mail.arc.nasa.gov. June 6, 2002.

118. TDRSS Program. Internet site: http://samadhi.jpl.nasa.gov/msl/Programs/tdrss.html. 2002.

119. The Artemis Project. Overview of the Artemis Project Reference Mission. Internet site: http://www.asi.org/adb/01/03/overview.html. 2002.

120. The Forbes Four Hundred. Internet site: http://www.forbes.com/2002/09/13/rich400land.html. 2002.

121. The World's Billionaires. Forbes. Internet site: http://www.forbes.com/2002/02/28/billionaires.html. 2002.

122. TPSX Material Properties Database Web Edition Version 3. Internet Site: http://tpsx.arc.nasa.gov/tpsx3/main.html. 2002.

123. U.S. Navy, Nuclear Propulsion Program. Occupational Radiation Exposure from U.S. Naval Nuclear Propulsion Plants and Their Support Facilities (Report NT-91-2). Naval Nuclear Propulsion Program. 1991.

124. Using Iridium – Products and Services: Airsat 1 Specifications. Internet site: http://www.iridium.com/product/iri_product-detail.asp?productid=441&method=specification. 2002.

125. Vinh, N.X.; Buseman, A.; Culp, R.D. Hypersonic and Planetary Entry Flight Mechanics. University of Michigan Press. 1980.

126. Wade, Mark. Apollo LM Taxi. Encyclopedia Astronautica. Internet site: http://www.astronautix.com/craft/apomtaxi.htm. 2002.

127. Wade, Mark. Delta 4H-2. Encyclopedia Astronautica. Internet site: http://www.astronautix.com/stages/delta4h2.htm. 2002.

128. Wade, Mark. RL-10B-2. Encyclopedia Astronautica. Internet site: http://www.astronautix.com/engines/RL-10B-2.htm. 2002.

129. Ward, Thomas E., Ph.D. Space Radiation Issues, Shielding Requirements, and Enabling Science. Department of Energy. 1991.

130. Watt, Mel. [Personal Interview with Representative Mel Watt]. Unpublished raw data. 2002.

131. Wertz, James R. and Larson, Wiley J (Eds.). Reducing Space Mission Cost. Torrance, CA: Microcosm, Inc. 1996.

132. Williams, S.D. and Curry, Donald M. Thermal Protection Materials: Thermophysical Property Data. NASA RP-1289. December 1992.

133. Williams, S.D.; Curry, Donald M.; Bouslog, Stanley A.; Rochelle, William C. Thermal Protection System Design Studies for Lunar CM. Journal of Spacecraft and Rockets. Vol. 32, No. 3. May-June 1995.

134. Williams, S.D.; Gietzel, M.M.; Rochelle, W.C.; Curry, D.M. TPS Design for Aerobraking at Earth and Mars. NASA-TM 104379. August 1991.

135. Wilson, Sam. Unpublished Document. Program documentation for E2LP trajectory analysis program. NASA – Johnson Space Center. 1991.

136. Wilson, Sam. Unpublished Document. Program documentation for LOEO trajectory analysis program. Elgin Software, Inc. 1996.

Appendix

Table 3-1. Transfers from LEO to LLO

LEO Inclination	TLI Delta V (m/s)	LOI Delta V (m/s)	Total Delta V (m/s)	Flight Time (days)
28.6	3107	1016	4123	3.065
28.6	3104	1011	4115	3.148
28.6	3101	1009	4110	3.231
51.7	3093	1051	4144	3.595
51.2	3095	1049	4144	3.512

Table 3-2. Transfers from LEO to L1

Flight Time	28.5 to L1 Delta-V (m/s)	51.6 to L1 Delta-V (m/s)
1 Day	6818.4	6832.5
2 Days	4443.1	4477.1
2.5 Days	4066.4	4112.2
3 Days	3878.3	3934.2
4 Days	3794.2	3856.5

Table 3-3. Transfer from L1 to LLO

Flight Time	L1 to LLO Delta-V (m/s)
0.5 Day	2202.46
1 Day	1244.195
1.5 Days	984.06
2 Days	890.52

Table 3-4. Transfers from LLO to LEO

Flight Time	LLO to 28.5 Delta-V (m/s)	LLO to 51.6 Delta-V (m/s)
2 Days	1442	1767
2.5 Days	1224	1628
3 Days	1158	No Solution
3.5 Days	1183	No Solution
4 Days	1269	No Solution

Table 3-5. Transfers from LLO to L1

Flight Time	LLO to L1 Delta-V (m/s)
0.5 Day	2202.09
1 Day	1244.15
1.5 Days	984.07
2 Days	890.52

Table 3-6. Transfers from L1 to LEO

Flight Time	L1 to 28.5 Delta-V (m/s)	L1 to 51.6 Delta-V (m/s)
1 Day	3286.9	3301
2 Days	1324.2	1358.1
2.5 Days	984	1029.7
3 Days	810.4	866.1
4 Days	732	794.1

Table 3-7. Simulated Lissajous Orbits (Hoffman, 1993)

Simulated Lissajous Orbit	Communications Coverage	Orbital Radius (from L2) (km)	Total Accumulated Δv (mps/yr)
Case 1	60.96%	2130.4	22.821
Case 2	81.85%	2840.6	36.104
Case 3	96.00%	5681.7	124.164
Case 4	99.02%	11,367.1	524.380
Case 5	99.79%	22.764.0	3063.513

Table 4-1. Water Mass Requirements

	Potable kg/p/d	Hygiene kg/p/d	Totals kg	Recovery Losses (kg)	Recovery Mechanism
Drinking	1.6		46.4	0.0	None
Food Preparation	0.8		21.8	0.0	None
Dishwashing		5.5	23.1	20.5	MF1
Hand Wash		4.1	17.2	15.3	MF1
Urinal Flushing		0.5	2.1	1.9	MF2
EVA-Cooling	7.3 (kg/EVA)		58.4	0.0	None

Table 4-2. LTV Crew Accommodations Components

System	Component	Quantity	Dimensions (Meters) L	W	H
Galley	Pantry	1	0.508	0.432	0.909
	Storage Locker	2	0.508	0.576	0.190
	Oven	1	1.118	0.914	0.914
	Water Dispenser	1	0.864	0.711	0.708
	Wet Trash	2	0.274	0.274	0.274
	Dry Trash	2	0.274	0.274	0.274
Housekeeping	Storage Locker	20	0.508	0.432	0.254
	Wet Trash	4	0.610	0.610	0.610
	Dry Trash	8	0.274	0.274	0.274
WCS	Storage Locker	1	0.508	0.432	0.254
	Wet Trash	2	0.274	0.274	0.274
	Dry Trash	2	0.274	0.274	0.274
	Hand Washing Station	1	0.914	0.711	0.708
	Toilet	1	0.762	0.914	1.418
Seating	Seated Ops Console	2	0.914	0.914	1.575
	Storage Locker	1	0.508	0.432	0.254
	Photo/Video Equipment	1	0.630	0.630	0.630
Crew	Storage Locker	14	0.508	0.432	0.254
	Rower	1	1.240	0.881	1.575
	Sleep Cabinet (Shuttle)	2	0.762	0.762	1.905
	Crew Member	2	1.900	0.488	0.889
EVA	EMU Storage	2	1.918	0.848	0.686

Table 4-3. Space Radiator Heat Rejection (Larson and Pranke, 1999)

Radiator Location and Type	Average Radiator Temperature (K)	Approximate Heat Rejection (W/m^2)
LEO – Tracking	270	104
	290	185
LLO	270	171
	290	251
Transit	270	171
	290	251

Table 4-4. CM Communications Architecture

Communications Sizing		
Frequency	46	GHz
Speed of light	3.00E+08	m/s
Wavelength	0.00652	m
Distance	346069	km
Pointing Loss	0.5	dB
Modulation	BPSK	
Coding	None	
BER	1.00E-05	
SNR req'd	9.6	dB
Margin	2	dB
Data rate	12000	kbps
	70.792	dB-bps
Receive Ant diam	0.779	m
Transmit Power	0.1	kW
	68.89	dBW
Ant Efficiency (h)	0.55	
Receive Gain	77348.67	
	48.88	dB
Noise Temp	500	K
	26.990	dBK
Free Space Loss	4.45E+17	
	236.49	dB
Other Loss	0.5	dB
Boltzman's constant	-228.6	dBW/K.Hz
SNR avail at receiver	11.6	dB
Transmit Gain	48.89	dB
Transmit Antenna Diameter	0.779	m

Table 4-5. RS-72 Engine (RS-72, 2002)

RS-72 Storable Upper Stage Engine	
Engine	**RS-72**
Propellants:	NTO/MMH
Thrust (vacuum):	12,450 lbf. (55.4 kN)
Specific Impulse (vacuum):	338 sec.
Chamber Pressure:	895 psia (61.7 bar)
Mixture Ratio (O/F):	2.05
Weight:	340 lb. (154 kg)
Area Ratio:	300
Length:	90 in. (2286 mm)
Restarts:	Multiple

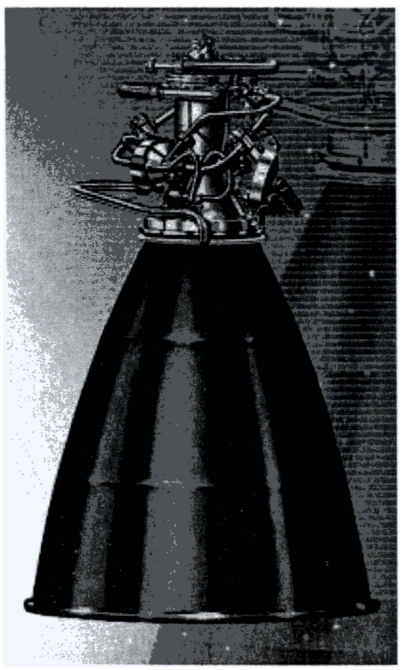

Table 4-6. R-4D Engine (R-4D – General Dynamics, 2002)

R-4D Bipropellant Rocket Engine	
Engine	**R-4D**
Propellants:	NTO/MMH
Thrust (vacuum):	110 lbf. (490 N)
Specific Impulse (vacuum):	315.5 sec.
Chamber Pressure:	108 psia
Mixture Ratio (O/F):	1.65
Weight:	8.3 lb. (3.76 kg)
Area Ratio:	300
Valve Power:	Various (46 watts @ 28 Vdc typical)
Steady State Firing:	Unlimited (12,000 sec demo)

Table 4-7. Single Axis Maneuvering Thruster Selection

Maneuver	Primary	Backup
+ Pitch	1,14	11,6 → 16,4 → 12,5
- Pitch	15,7	12,5 → 16,4 → 11,6
+ Yaw	16,4	12,5 → 1,14 → 11,6
- Yaw	10,13	11,6 → 1,14 → 12,5
+ Roll	12,5	2,9
- Roll	11,6	3,8
+ X	16,13	15,14
- X	10,4	1,7
+ Y	3,9	11,6 → 11,5 → 12,5
- Y	2,8	12,5 → 11,5 → 11,6
+ Z	12,6	1,14 → 16,13 → 15,7
- Z	11,5	15,7 → 16,13 → 1,14

Table 4-8. Crew Module Power Requirements

Vehicle System	Component	Power (kW)
Crew Accommodations	Toilet	0.09
	Lighting	0.5
	Vacuum	0.4
	Video	0.4
	Oven	1.8
	Hand Washing Station	1
	Displays and Controls	0.324
	Personal Equipment	0.7
Life Support	LiOH	0.012
	Water	0.16
Thermal Control	TCS Loops	0.124
	Cabin Fans	0.012
Communications	Transmitter	0.1
Propulsion	RCS Thrusters	0.276
Docking	MDAS	0.39
Avionics	Horizon Sensor	0.0008
	Sun Sensors	0.0001
	Star Sensors	0.009
	Laser Rangefinder	0.0175
	Flush Air Data	0.01
	SIGI GPS	0.045
	Flight Computer	0.065
Total Power		6.435

Table 4-9. Power Requirements by Flight Regime

Flight Regime	Power (kW)
LEO - Crewed	3.030
LEO - Standby	1.546
LLO - Crewed	3.032
LLO - Standby	2.844
TLI/TEI	2.929
Entry	1.781

Table 4-10. Eclipse Duration and kWh by Flight Phase

Flight Regime	Eclipse Duration (h)	Eclipse kWh	Array Charge Power (kW)
LEO - Crewed	0.601	1.822	2.098
LEO - Standby	0.601	0.930	1.071
LMO - Crewed	0.776	2.353	2.147
LMO - Standby	0.776	2.206	2.014
TLI/TEI	0	0.000	0.018
Entry	1.750	3.117	N/A

Table 4-11. Crew Module Mass Summary

CM System	Subsystem	Mass (kg)
Water	Fluid	148.14
	Tankage	18.31
	Filtration	40.00
	EVA System	58.40
Communications	Satellite Phone	13.17
	Antenna	18.69
	Transponder	46.50
Atmosphere Management	ADV Air	69.27
	Nitrogen	9.93
	Oxygen	58.95
	LiOH	50.75
	EVA	64.00
Crew Accommodations		1176.34
Sensors/Avionics		65.53
Docking		612.60
Thermal Control	Loop 1	114.98
	Loop 2	114.98
	Radiator	217.68
	TPS	860.01
Power	Batteries	12.98
	EPDC	334.30
	Wiring	288.48
	Arrays & Drive	99.14
Landing	Parafoil	1812.10
Propulsion	APS	629.04
	ACS	67.44
Structure	Structure	4258.33
	EMA	613.67
	STS Grapple Fixtures	102.06
	Radiator Beam	12.57
	Winches	83.23
Total Vehicle Dry Mass		12071.57
Allocated Growth	15%	13882.31
Fuel Mass	APS-L1	3843.51
	APS-Deorbit	3488.41
	ACS	58.29
Total Vehicle Mass	LEO to L1	17784.10
	Post L1	17429.00

Table 5-1. PM1 MPS Burn Summary

Burn #	Burn Description	Δv (km/s)	Vehicle Mass (kg)	Fuel Mass (kg)	MMH Mass (kg)	N_2O_4 Mass (kg)	Burn Time (s)
1	L1 Capture	0.810	4441.39	1229.66	403.17	826.49	36.80
2	L1 Departure	0.636	4781.07	1011.43	331.62	679.82	30.27
3	LLO Capture	0.254	4428.23	352.84	115.68	237.15	10.56
4	LLO Departure	0.636	4886.03	1033.64	338.90	694.74	30.93
5	L1 Capture	0.254	4525.45	360.58	118.22	242.36	10.79
6	L1 Departure	0.810	22445.58	6214.37	2037.50	4176.87	185.97
7	LEO Circularization	0.089	21849.63	595.95	195.39	400.56	17.83
S-1	PM1-S LLO Capture	0.810	5910.54	1636.42	536.53	1099.89	48.97

Table 5-2. PM1 ACS Thruster Engine Numbering

Thruster	Cluster Location	Exhaust Direction
1	Dorsal	+ X
2	Dorsal	+ Y
3	Dorsal	- Y
4	Dorsal	- X
5	Starboard	+ X
6	Starboard	+ Z
7	Starboard	- Z
8	Starboard	- X
9	Port	+ X
10	Port	+ Z
11	Port	- Z
12	Port	- X
13	Ventral	+ X
14	Ventral	+ Y
15	Ventral	- Y
16	Ventral	- X

Table 5-3. PM1 Single Axis Maneuvering Thruster Selection

Maneuver	Primary	Backup
+ Pitch	1,16	7,10 → 5,12 → 6,11
- Pitch	4,13	6,11 → 5,12 → 7,10
+ Yaw	5,12	6,11 → 1,16 → 7,10
- Yaw	8,9	7,10 → 1,16 → 6,11
+ Roll	6,11	2,15
- Roll	7,10	3,14
+ X	8,12	4,16
- X	5,9	1,13
+ Y	3,15	7,10 → 6,10 → 6,11
- Y	2,14	6,11 → 6,10 → 7,10
+ Z	7,11	1,16 → 8,12 → 4,13
- Z	6,10	4,13 → 8,12 → 1,16

Table 5-4. PM1 Power Budget

System	Power (kW)
Avionics	0.264
Propulsion	0.736
Docking	0.390
Thermal	0.036
Communications	0.123
Total	1.549

Table 5-5. PM1 Eclipse kWh

Flight Regime	Eclipse Duration (h)	Eclipse kWh
LEO	0.60	0.932
LLO	0.78	1.202
TLI/TEI	No Eclipse Period	N/A

Table 5-6. PM1 Dry Mass Summary

System	Subsystem	Mass (kg)
Communications	Antenna	28.03
	Transmitter	57.29
Sensors/Avionics	SIGI GPS	9.53
	GPS Antenna	0.07
	Star Tracker	4.80
	Laser Rangefinder	18.00
	Horizon Sensor	1.40
	Sun Sensors	1.80
	Flight Computer	10.00
Thermal Control	Radiators	108.15
	Loop 1	53.90
	Loop 2	53.90
Propulsion	Engines	425.04
	Tankage	847.28
Power	Wiring, etc.	185.96
	P1 Array	27.38
	Batteries	5.01
Docking	APAS, MGS, MDAS	611.78
Structure	21%	225.40
Dry Mass		2674.73
Radiation Shield		1299.731
Allocated Growth	+15%	4375.67

Table 6-1. ADV SLS Burn Summary

Burn #	Burn Description	Δv (km/s)	Vehicle Mass (kg)	Fuel Mass (kg)	MMH Mass (kg)	N_2O_4 Mass (kg)	Burn Time (s)
0	LLO Capture (initial)	1.009	18110.27	4751.45	1557.85	3193.60	284.38
1	LTV Rendezvous	0.2	20353.71	1273.65	417.59	856.06	N/A
2	Deorbit	0.019	19430.04	108.69	35.64	73.05	6.51
3	Powered Descent	1.862	19321.35	8301.99	2721.96	5580.03	496.89
4	Powered Ascent	1.815	11019.36	4645.08	1522.98	3122.10	278.02
5	Orbit Circularization	0.019	6374.28	36.42	11.94	24.48	2.18
6	LTV Rendezvous	0.2	6337.86	396.60	130.03	266.56	N/A

Table 6-2. ADV ACS Thruster Engine Numbering

Thruster	Cluster Location	Exhaust Direction
1	Forward Port	-X
2	Forward Port	+Z
3	Forward Port	-Z
4	Forward Port	+Y
5	Forward Starboard	-X
6	Forward Starboard	+Z
7	Forward Starboard	-Z
8	Forward Starboard	-Y
9	Aft Port	+X
10	Aft Port	+Z
11	Aft Port	-Z
12	Aft Port	+Y
13	Aft Starboard	+X
14	Aft Starboard	+Z
15	Aft Starboard	-Z
16	Aft Starboard	-Y

Table 6-3. ADV Single Axis Maneuvering Thruster Selection

Maneuver	Primary	Backup
+ Pitch	3,7,10,14	2,7,10,15 → 4,16 → 3,6,11,14
- Pitch	2,6,11,15	3,6,11,14 → 4,16 → 2,7,10,15
+ Yaw	4,16	5,9
- Yaw	8,12	1,3
+ Roll	3,6,11,14	3,7,10,14 → 4,16 → 2,6,11,15
- Roll	2,7,10,15	3,7,10,14 → 8,12 → 2,6,11,15
+ X	9,13	4,16 → 8,16 → 8,12
- X	1,5	4,16 → 4,12 → 8,12
+ Y	8,16	8,12 → 9,13 → 4,16
- Y	4,12	4,16 → 9,13 → 8,12
+ Z	3,7,11,15	3,7,10,14 → 9,13 → 2,6,11,15
- Z	2,6,10,14	2,6,11,15 → 9,13 → 3,7,10,14

Table 6-4. ADV Power Requirements by Flight Phase

System	Subsystem	Descent	Surface (External Power)	Ascent	LLO - Rendezvous	LLO - Uncrewed	Initial Deploy
Avionics	MIMU	0.102	0.000	0.102	0.102	0.000	0.000
	Horizon Sensor	0.002	0.000	0.002	0.002	0.002	0.002
	Sun Sensors	0.001	0.000	0.001	0.001	0.001	0.001
	Star Tracker	0.018	0.018	0.018	0.018	0.018	0.018
	Laser Rangefinder	0.000	0.000	0.000	0.105	0.000	0.000
	Flight Computer	0.195	0.195	0.195	0.195	0.195	0.195
	Laser Altimeter	0.033	0.000	0.033	0.000	0.000	0.000
Communications		0.123	0.123	0.123	0.123	0.123	0.123
Life Support		0.012	0.000	0.012	0.012	0.000	0.000
Crew Accommodations		0.384	0.000	0.384	0.384	0.000	0.000
Thermal		0.029	0.008	0.029	0.038	0.008	0.017
Structure	Docking System	0.000	0.000	0.000	0.311	0.000	0.000
Propulsion	ACS	0.368	0.000	0.368	0.368	0.000	0.368
	Total Power	1.266	0.344	1.266	1.659	0.346	0.723

Table 6-5. ADV Dry Mass Summary

System	Subsystem	Mass (kg)
Avionics	MIMU	12.25
	Horizon Sensor	2.80
	Sun Sensors	1.80
	Star Tracker	4.80
	Laser Rangefinder	27.00
	Flight Computer	15.00
	Laser Altimeter	4.74
Communications	Antenna	18.69
	Transmitter	57.29
Crew Accommodations		559.18
Life Support		28.58
Thermal Control	Radiators	58.42
	TCS	83.50
Power	Arrays & Drive	93.24
	Battery Mass	26.08
	Wiring, etc.	254.30
Propulsion	Engines	242.64
	Tankage	1828.56
Docking	APAS	595.01
Structure	21%	1252.44
Allocated Growth		774.95
Dry Mass		5941.26

Table 7-1. Aerocapture Data for Lunar Return (Williams, Gietzel, et al and Williams, Curry, et al)

Vehicle	Mass	m/C_DA	Area	R_N	V_i	γ_i	α	C_D	C_L	L/D	q_c	q_r	q_T
Apollo 1.0	6466	432	11.6	1.96	11.0	-5.2	20	1.29	0.387	0.3	109	51	159
Apollo 1.5	11724	348	26.0	2.94	11.0	-5.2	20	1.29	0.387	0.3	81	50	129
Apollo 2.5	34198	386	72.4	4.90	11.0	-5.2	20	1.29	0.387	0.3	64	69	132
α=40 Domed Cylinder	28217	204.55	665.91	5.35	10.6	-5.2	40	0.207	0.104	0.5	67	70.3	137.4
α=55 Domed Cylinder	29837	223.16	530.86	4.265	10.6	-5.7	55	0.252	0.103	0.407	67.1	55.7	122.8
α=57 Domed Cylinder	29837	213.91	530.86	4.265	10.6	-5.5	57	0.263	0.101	0.385	60.5	38	98.6

Table 7-2. Predicted Maximum Convective Heating

Vehicle	Apollo 1.0	Apollo 1.5	Apollo 2.5	α=40 Cylinder	α=55 Cylinder	α=57 Cylinder
Max. Convective Heating	118.70	87.78	69.49	44.79	54.91	54.56
Percent Error	9%	8%	18%	10%	9%	33%
Delta	-9.70	-6.78	-5.49	22.21	12.19	5.94

Table 7-3. AM RCS Thruster Engine Numbering

Thruster	Cluster Location	Exhaust Direction
1	Starboard	+X
2	Starboard	+Z
3	Starboard	-X
4	Starboard	-Z
5	Port	+X
6	Port	+Z
7	Port	-X
8	Port	-Z
9	Dorsal	+Y
10	Dorsal	+Z
11	Dorsal	-Y
12	Dorsal	-X
13	Ventral	+Y
14	Ventral	-Z
15	Ventral	-Y
16	Ventral	-X

Table 7-4. AM Single Axis Maneuvering Thruster Selection

Maneuver	Primary	Backup	Fast	Entry
+ Pitch	2,6	10	2,6,10	2,6,10
- Pitch	4,8	14	4,8,14	4,8,14
+ Yaw	11,15	3,5	3,5,11,15	3,5
- Yaw	9,13	1,7	1,7,9,13	1,7
+ Roll	4,6	9,15	4,6,12,15	9,15
- Roll	2,8	11,13	2,8,11,13	11,13
+ X	3,7	12,16	3,7,12,16	N/A
- X	1,5	2,12 (180 deg) → 3,7 → 4,15 (180 deg)	N/A	N/A
+ Y	N/A	11,15,1,7	N/A	N/A
- Y	N/A	9,13,3,5	N/A	N/A
+ Z	N/A	4,6 → 11,15,1,7 → 2,8	N/A	N/A
- Z	N/A	4,6 → 9,13,3,5 → 2,8	N/A	N/A

Table 7-5. Aeroshell Module Systems Mass Summary

System	Subsystem	Mass (kg)
Avionics	SIGI GPS	9.53
	GPS Antenna	0.07
	Star Tracker	4.80
	Laser Rangefinder	27.00
	Flight Computer	10.00
Communications	Antenna	18.69
	Transmitter	46.50
Docking	APAS, MGS, MDAS	855.43
Thermal Control	Radiators	80.32
	Heat Exchanger	8.24
	Pumps	61.85
Power	Array Mass	21.56
	Battery Mass	2.91
	Wiring, etc.	278.53
Propulsion	Engines	60.24
	Tankage	175.71
Allocated Growth	15%	293.18
Systems Mass		1954.56

Table 8-1. FT MPS Burn Summary

FT Mission	Δv (km/s)	Vehicle Mass (kg)	Fuel Mass (kg)	MMH Mass (kg)	N_2O_4 Mass (kg)	Burn Time (s)
1	1.009	18110	13804	4526	9278	284
2	0.200	10062	5735	1912	3822	N/A
3	0.810	8347	4055	1336	2719	108
4	1.009	8443	4137	1378	2760	133
5	0.810	18183	13876	4564	9312	236

Table 8-2. FT ACS Thruster Engine Numbering

Thruster	Cluster Location	Exhaust Direction
1	Dorsal	+ X
2	Dorsal	+ Y
3	Dorsal	- Y
4	Dorsal	- X
5	Starboard	+ X
6	Starboard	+ Z
7	Starboard	- Z
8	Starboard	- X
9	Port	+ X
10	Port	+ Z
11	Port	- Z
12	Port	- X
13	Ventral	+ X
14	Ventral	+ Y
15	Ventral	- Y
16	Ventral	- X

Table 8-3. FT Single Axis Maneuvering Thruster Selection

Maneuver	Primary	Backup
+ Pitch	1,16	7,10 → 5,12 → 6,11
- Pitch	4,13	6,11 → 5,12 → 7,10
+ Yaw	5,12	6,11 → 1,16 → 7,10
- Yaw	8,9	7,10 → 1,16 → 6,11
+ Roll	6,11	2,15
- Roll	7,10	3,14
+ X	8,12	4,16
- X	5,9	1,13
+ Y	3,15	7,10 → 6,10 → 6,11
- Y	2,14	6,11 → 6,10 → 7,10
+ Z	7,11	1,16 → 8,12 → 4,13
- Z	6,10	4,13 → 8,12 → 1,16

Table 8-4. FT ACS Propellant Requirements

FT Mission	Fuel Mass (kg)	MMH Mass (kg)	N_2O_4 Mass (kg)
1	41	15	26
2	20	8	12
3	55	21	34
4	41	15	26
5	40	15	25

Table 8-5. FT Refueling Operations

FT Mission	FT(s) Involved	Vehicle(s) Serviced	Refueling Location	Fuel Payload (kg)
1	FT1a, FT1b, FT1c	ADV	LLO	9011.76
2	FT2	CM, PM1	LEO	5085.38
3	FT3	PM1	L1	2114.17
4	FT4	PM1	LLO	1491.44
5	FT3, FT5	CM, PM1	L1	9646.36

Table 8-6. FT Power Requirements by Flight Phase

		Power Requirements (kW)			
System	**Subsystem**	LEO	TLI	LLO – Active	LLO – Standby
Avionics	SIGI GPS	0.090	0.000	0.000	0.000
	Star Tracker	0.018	0.018	0.018	0.000
	Sun Sensor	0.001	0.001	0.001	0.000
	Horizon Sensor	0.002	0.000	0.002	0.000
	Laser Rangefinder	0.053	0.000	0.053	0.000
	Flight Computer	0.195	0.195	0.195	0.065
Communications		0.123	0.123	0.123	0.000
Thermal	Pumps	0.029	0.029	0.029	0.019
Structure	Docking System	0.000	0.000	0.000	0.000
Propulsion	ACS	0.736	0.736	0.736	0.736
	Total Power	1.246	1.101	1.156	0.820

Table 8-7. Fuel Tanker Dry Mass Summary

System	Subsystem	Mass (kg)
Avionics	SIGI GPS	19.06
	GPS Antenna	0.07
	Star Tracker	4.80
	Sun Sensor	1.80
	Horizon Sensor	2.80
	Laser Rangefinder	13.50
	Flight Computer	15.00
Communications	Antenna	18.69
	Transmitter	57.29
Thermal Control	Radiators	86.15
	Loop 1	53.67
	Loop 2	53.67
Power	Array Mass	23.13
	Battery Mass	3.74
	Wiring, etc.	203.54
Propulsion	Engines	242.64
	Tankage	1715.00
Docking	APAS	309.15
Structure	22%	956.35
Allocated Growth	15%	567.01
Dry Mass		4347.06

Table 9-1. MB-60 (MB-XX, 2002)

MB-60	
Propellants:	LOX/Hydrogen
Thrust (vacuum):	60,000 lb f (267 kN)
Specific Impulse (nominal, vacuum):	467 sec
Chamber Pressure:	1950 psia (134 bar)
Mixture Ratio (O/F):	5.8:1.0
Weight:	1300 lb (591 kg)
Area Ratio:	300
Length:	130 in (3300 mm)
Restarts:	Multiple

Table 9-2. Centaur PM-2 Capacity

Payload	Payload Mass (kg)	Destination	Δv (km/s)	Fuel Mass (kg)	% PM2 Capacity
CM	17784	L1	3.068	20039	97%
PM1/AM	14696	L1	3.068	17200	83%
PM1-S/AM-S	16572	L1	3.068	18825	91%
ADV	18110	LLO	3.101	20672	100%
FT-M1	18110	LLO	3.101	20672	100%
FT-M3	8347	L1	3.068	10582	51%
FT-M4	8443	LLO	3.101	10840	52%
FT-M5	17936	L1	3.068	20192	98%

Table 9-3. Delta 4-2 RL-10B-2 PM-2 Capacity

Payload	Payload Mass (kg)	Destination	Δv (km/s)	Fuel Mass (kg)	% PM2 Capacity
CM	17784	L1	3.068	20868	98%
PM1/AM	14696	L1	3.068	18146	86%
PM1-S/AM-S	16572	L1	3.068	19695	93%
ADV	17828	LLO	3.101	21222	100%
FT-M1	17828	LLO	3.101	21222	100%
FT-M3	8536	L1	3.068	11917	56%
FT-M4	8364	LLO	3.101	11926	56%
FT-M5	17608	L1	3.068	20697	98%

Table 9-4. Delta 4-2 MB-60 PM-2 Capacity

Payload	Payload Mass (kg)	Destination	Δv (km/s)	Fuel Mass (kg)	% PM2 Capacity
CM	17784	L1	3.068	20846	100%
PM1/AM	14696	L1	3.068	18167	87%
PM1-S/AM-S	16572	L1	3.068	19690	94%
ADV	17545	LLO	3.101	20924	100%
FT-M1	17545	LLO	3.101	20924	100%
FT-M3	8763	L1	3.068	12243	59%
FT-M4	8291	LLO	3.101	11969	57%
FT-M5	17254	L1	3.068	20340	97%

Table 9-5. ELV Lift Capacity for Centaur PM2

Payload	PM2 Total Mass (kg)	% Delta IV H Capacity	% Atlas V H Capacity
CM	22253	97%	89%
PM1/AM	19413	84%	78%
PM1-S/AM-S	21038	91%	84%
ADV	22885	99%	92%
FT-M1	22885	99%	92%
FT-M3	12796	56%	51%
FT-M4	13053	57%	52%
FT-M5	22405	97%	90%

Table 9-6. ELV Lift Capacity for Delta 4-2 RL-10B-2 PM2

Payload	PM2 Total Mass (kg)	% Delta IV H Capacity	% Atlas V H Capacity
CM	24646	107%	99%
PM1/AM	21924	95%	88%
PM1-S/AM-S	23473	102%	94%
ADV	25000	109%	100%
FT-M1	25000	109%	100%
FT-M3	15696	68%	63%
FT-M4	15705	68%	63%
FT-M5	24475	106%	98%

Table 9-7. ELV Lift Capacity for Delta 4-2 MB-60 PM2

Payload	PM2 Total Mass (kg)	% Delta IV H Capacity	% Atlas V H Capacity
CM	24922	108%	100%
PM1/AM	22243	97%	89%
PM1-S/AM-S	23766	103%	95%
ADV	25000	109%	100%
FT-M1	25000	109%	100%
FT-M3	16319	71%	65%
FT-M4	16045	70%	64%
FT-M5	24416	106%	98%

Table 11-1. LTV Spacecraft Cost Estimates

Spacecraft or Engine	Mission Type	Block	Difficulty	Dry Weight (lb)	Program Total	Cost ($B)
CM	Spacecraft-Manned Reentry	2	Average	30402	4	6.284
PM1	Space Transport - Upper Stage	1	High	9634	5	2.824
ADV	Spacecraft-Manned Reentry	1	Average	12911	4	4.592
PM2	Space Transport - Upper Stage	8	Very Low	4880	57	0.976
AM	Space Transport - Unmanned Reentry	1	Average	17047	11	2.103
FT	Space Transport - Upper Stage	2	Average	9593	47	5.359
RS-72	Space Transport - Liquid Rocket Engine - Lox/Rp	3	Very Low	340	65	0.097
RL-10	Space Transport - Liquid Rocket Engine - Lox/Lh	14	Very Low	368	57	0.249
R-4D	Space Transport - Liquid Rocket Engine - Lox/Lh	5	Very Low	8	1136	0.039

Table 11-2. Atlas Family Payload and Cost Data

Launch Vehicle	Payload Capacity (kg)	Cost (M)
Atlas 402	12,500	$90
Atlas 502	10,300	$85
Atlas 512	12,590	$90
Atlas 522	15,080	$95
Atlas 532	17,250	$100
Atlas 542	18,955	$105
Atlas 552	20,520	$110
Atlas V H	25,000	$130

Table 11-3. Delta Family Payload and Cost Data

Launch Vehicle	Payload Capacity (kg)	Cost (M)
Delta IV M	8,120	$70
Delta IV M+ (4,2)	10,430	$90
Delta IV M+ (5,2)	7,980	$80
Delta IV M+ (5,4)	11,475	$100
Delta IV H	23,040	$140

Table 11-4. ELV Percent Capacity of Trailblazer Spacecraft

ELV Payload	Launch Mass (kg)	Atlas V H	Delta IV H	Atlas 552	Atlas 542	Atlas 532	Atlas 522	Atlas 512	Delta IV M+ (4,2)	Atlas 502	Delta IV M
CM	17784	71%	77%	87%	94%	103%	118%	141%	171%	173%	219%
PM1	5725	23%	25%	28%	30%	33%	38%	45%	55%	56%	70%
PM1-S	7547	30%	33%	37%	40%	44%	50%	60%	72%	73%	93%
ADV	18110	72%	79%	88%	96%	105%	120%	144%	174%	176%	223%
AM	9025	36%	39%	44%	48%	52%	60%	72%	87%	88%	111%
AM-S	9025	36%	39%	44%	48%	52%	60%	72%	87%	88%	111%
FT-M1	18110	72%	79%	88%	96%	105%	120%	144%	174%	176%	223%
FT-M2	10062	40%	44%	49%	53%	58%	67%	80%	96%	98%	124%
FT-M3	8347	33%	36%	41%	44%	48%	55%	66%	80%	81%	103%
FT-M4	8443	34%	37%	41%	45%	49%	56%	67%	81%	82%	104%
FT-M5	17936	72%	78%	87%	95%	104%	119%	142%	172%	174%	221%
PM2 (CM)	22253	89%	97%	108%	117%	129%	148%	177%	213%	216%	274%
PM2 (PM1/AM)	19413	78%	84%	95%	102%	113%	129%	154%	186%	188%	239%
PM2 (PM1-S/AM-S)	21038	84%	91%	103%	111%	122%	140%	167%	202%	204%	259%
PM2 (ADV)	22885	92%	99%	112%	121%	133%	152%	182%	219%	222%	282%
PM2 (FT-M1)	22885	92%	99%	112%	121%	133%	152%	182%	219%	222%	282%
PM2 (FT-M3)	12796	51%	56%	62%	68%	74%	85%	102%	123%	124%	158%
PM2 (FT-M4)	13053	52%	57%	64%	69%	76%	87%	104%	125%	127%	161%
PM2 (FT-M5)	22405	90%	97%	109%	118%	130%	149%	178%	215%	218%	276%

Table 11-5. ELV Percent Capacity of Selected Combined Spacecraft

ELV Payload	Launch Mass (kg)	Atlas V H	Delta IV H	Atlas 552	Atlas 542	Atlas 532	Atlas 522	Atlas 512	Delta IV M+ (4,2)	Atlas 502	Delta IV M
CM+PM1	23509	94%	102%	115%	124%	136%	156%	187%	225%	228%	290%
PM1-S+AM-S	16572	66%	72%	81%	87%	96%	110%	132%	159%	161%	204%
AM+FTM2	19087	76%	83%	93%	101%	111%	127%	152%	183%	185%	235%
FTM3+PM2 (FTM3)	21143	85%	92%	103%	112%	123%	140%	168%	203%	205%	260%
FTM4+PM2 (FTM4)	21497	86%	93%	105%	113%	125%	143%	171%	206%	209%	265%

Table 11-6. LTV Initial Expedition Launch Costs

LTV Spacecraft	Spacecraft Launch Mass (kg)	Launch Vehicle	Cost (M)
ADV	18,110	Atlas 542	$105
PM2 (ADV)	22,885	Delta IV H	$140
PM1-S+AM-S	16,572	Atlas 532	$100
PM2 (PM1-S/AM-S)	21,038	Delta IV H	$140
CM+PM1	23,509	Atlas V H	$130
FT-M1	18,110	Atlas 542	$105
PM2 (FT-M1)	22,885	Delta IV H	$140
FT-M1	18,110	Atlas 542	$105
PM2 (FT-M1)	22,885	Delta IV H	$140
FT-M5	17,936	Atlas 542	$105
PM2 (FT-M5)	22,405	Delta IV H	$140
FTM4+PM2 (FTM4)	21,497	Atlas V H	$130
FTM3+PM2 (FTM3)	21,143	Delta IV H	$140
AM+FTM2	19,087	Atlas 552	$110
PM2 (PM1/AM)	19,413	Atlas 552	$110
Trailblazer Crew	N/A	Shuttle	$500
PM2 (CM)	22,253	Delta IV H	$140

Table 11-7. LTV Subsequent Even Numbered Expedition Launch Costs

LTV Spacecraft	Spacecraft Launch Mass (kg)	Launch Vehicle	Cost (M)
FT-M1	18,110	Atlas 542	$105
PM2 (FT-M1)	22,885	Delta IV H	$140
FT-M1	18,110	Atlas 542	$105
PM2 (FT-M1)	22,885	Delta IV H	$140
FT-M5	17,936	Atlas 542	$105
PM2 (FT-M5)	22,405	Delta IV H	$140
FTM4+PM2 (FTM4)	21,497	Atlas V H	$130
FTM3+PM2 (FTM3)	21,143	Delta IV H	$140
AM+FTM2	19,087	Atlas 552	$110
PM2 (PM1/AM)	19,413	Atlas 552	$110
Trailblazer Crew	N/A	Shuttle	$500
PM2 (CM)	22,253	Delta IV H	$140

Table 11-8. LTV Subsequent Odd Numbered Expedition Launch Costs

LTV Spacecraft	Spacecraft Launch Mass (kg)	Launch Vehicle	Cost (M)
FT-M1	18,110	Atlas 542	$105
PM2 (FT-M1)	22,885	Delta IV H	$140
FT-M5	17,936	Atlas 542	$105
PM2 (FT-M5)	22,405	Delta IV H	$140
FTM4+PM2 (FTM4)	21,497	Atlas V H	$130
FTM3+PM2 (FTM3)	21,143	Delta IV H	$140
AM+FTM2	19,087	Atlas 552	$110
PM2 (PM1/AM)	19,413	Atlas 552	$110
Trailblazer Crew	N/A	Shuttle	$500
PM2 (CM)	22,253	Delta IV H	$140

Table 11-9. LTV Fuel Mass: Initial Expedition

LTV Spacecraft	Fuel Mass (kg)			
	N_2O_4	MMH	LO_2	LH_2
ADV	8414	4105	0	0
PM2 (ADV)	0	0	17719	2953
PM1-S+AM-S	3087	1506	0	0
PM2 (PM1-S/AM-S)	0	0	16136	2689
CM+PM1	3529	1722	0	0
FT-M1	8570	5194	0	0
PM2 (FT-M1)	0	0	17719	2953
FT-M1	8570	5194	0	0
PM2 (FT-M1)	0	0	17719	2953
FT-M5	9134	4455	0	0
PM2 (FT-M5)	0	0	17307	2885
FTM4+PM2 (FTM4)	2753	1343	9291	1549
FTM3+PM2 (FTM3)	2688	1311	9071	1512
AM+FTM2	4797	2340	0	0
PM2 (PM1/AM)	0	0	14742	2457
PM2 (CM)	0	0	17177	2863
Totals	**51542**	**27169**	**136880**	**22813**

Table 11-10. LTV Fuel Mass: Subsequent Odd Numbered Expeditions

LTV Spacecraft	Fuel Mass (kg)			
	N_20_4	MMH	LO_2	LH_2
FT-M1	8570	5194	0	0
PM2 (FT-M1)	0	0	17719	2953
FT-M1	8570	5194	0	0
PM2 (FT-M1)	0	0	17719	2953
FT-M5	9134	4455	0	0
PM2 (FT-M5)	0	0	17307	2885
FTM4+PM2 (FTM4)	2753	1343	9291	1549
FTM3+PM2 (FTM3)	2688	1311	9071	1512
AM+FTM2	4797	2340	0	0
PM2 (PM1/AM)	0	0	14742	2457
PM2 (CM)	0	0	17177	2863
Totals	**36511**	**19837**	**103025**	**17171**

Table 11-11. LTV Fuel Mass: Subsequent Odd Numbered Expeditions

LTV Spacecraft	Fuel Mass (kg)			
	N_20_4	MMH	LO_2	LH_2
FT-M1	8570	5194	0	0
PM2 (FT-M1)	0	0	17719	2953
FT-M5	9134	4455	0	0
PM2 (FT-M5)	0	0	17307	2885
FTM4+PM2 (FTM4)	2753	1343	9291	1549
FTM3+PM2 (FTM3)	2688	1311	9071	1512
AM+FTM2	4797	2340	0	0
PM2 (PM1/AM)	0	0	14742	2457
PM2 (CM)	0	0	17177	2863
Totals	**27942**	**14644**	**85307**	**14218**

Table 11-12. Total LTV Fuel Costs

Fuel	Mass (kg)	Volume (gal)	Cost
N_2O_4	281412	51270	$6,836,829
MMH	150448	45164	$20,111,500
LO_2	804901	186520	$124,968
LH_2	134150	506268	$496,142

Table 11-13. X-38 V201 Ground Control Center Cost Data (Rader, 2002)

Rough Cost for X-38 V-201 Ground System	Courtesy Steve Rader, NASA-JSC		
Hardware and Software Costs	**Number**	**Unit Cost**	**Cost**
Display Computers (standard Win2K High End PC's)	38	$2,000	$76,000
18" Flat Panel Monitors (Note prices have dropped significantly since we bought these in FY00)	58	$2,500	$145,000
Data Servers	2	$5,000	$10,000
Telemetry Interface Servers (including $15K Avtec boards)	2	$18,000	$36,000
Telemetry Processing Servers (standard Win2K High End PC's)	4	$2,000	$8,000
Network Switching and Comm Equipment	-	$6,000	$6,000
Strip Chart Recorders (Everest)	4	$20,000	$80,000
Printers	3	$800	$2,400
Projector	2	$10,000	$20,000
COTS Messaging Software Lic (we used Tibco's Rendezvous product.. But are looking at cheaper alternatives for the future.)	46	$850	$39,100
Satellite Took Kit (STK) (Modules: Connect for all seats + 2 VO lic. And a Communications coverage Lic.)	10	$2,300	$23,000
Misc. Software (O/S, Tools, Utilities)	46	$500	$23,000
Total Hardware Costs			**$468,500**
Reoccurring Annual Costs	**Number**	**Annual Unit Cost**	**Annual Cost**
Software Maintenance (Rdvz + STK)		$100,000	$100,000
Hardware maintenance (computers only)	46	$2,160	$99,360
Network Admin/Tech (personnel)	2	$100,000	$200,000
Total Reoccurring Annual Costs			**$399,360**
Software Development Costs (for a 2.5 year development cycle)	**Number**	**Annual Unit Cost**	**Cost of 2.5 Year Dev.**
Ground Software Design, Code, Test (personnel)	4	$150,000	$1,500,000
Development Software (licenses)	4	$12,500	$50,000
Total Development Costs for 2.5 Year Development Cycle			**$1,550,000**
Note: Software development costs are highly dependent on your development team, requirements, and project management. The costs shown here reflect a very small, efficient team.			
Total Cost (for 2.5 years of development and operations)			**$3,016,900**

Table 11-14. Trailblazer LTV MCC Development Costs

Cost Estimates for LTV MCC			
Hardware and Software Costs	**Number**	**Unit Cost**	**Cost**
Computers (standard Win2K equivalent High End PC's)	162	$2,000	$324,000
18" Flat Panel Monitors	648	$2,500	$1,620,000
Data Servers	24	$5,000	$120,000
Telemetry Interface Servers (including $15K Avtec boards)	24	$18,000	$432,000
Telemetry Processing Servers (Win2K equivalent High End PC's)	48	$2,000	$96,000
Network Switching and Comm Equipment	12	$6,000	$72,000
Strip Chart Recorders (Everest)	-	$20,000	-
Printers	10	$800	$8,000
Projector	8	$10,000	$80,000
COTS Messaging Software Lic.	258	$850	$219,300
Satellite Took Kit (STK) (Modules: Connect for all seats + 2 VO lic. And a Communications coverage Lic.)	54	$2,300	$124,200
Misc. Software (O/S, Tools, Utilities)	258	$500	$129,000
Total Hardware Costs			**$3,224,500**
Reoccurring Annual Costs	**Number**	**Annual Unit Cost**	**Annual Cost**
Software Maintenance (Rdvz + STK)		$100,000	$100,000
Hardware maintenance (computers only)	258	$2,160	$557,280
Network Admin/Tech (personnel)	2	$100,000	$200,000
Total Reoccurring Annual Costs			**$857,280**
Software Development Costs (for a 2.5 year development cycle)	**Number**	**Annual Unit Cost**	**Cost of 2.5 Year Dev.**
Ground Software Design, Code, Test (personnel)	12	$150,000	$22,500,000
Development Software (licenses)	12	$12,500	$375,000
Total Development Costs for 2.5 Year Development Cycle			**$22,875,000**
Note: Software development costs include a 5x multiplier to account for more complex software than that used for X-38 ground center.			

Table 11-15. LTV MCC Flight Controller Salary Costs

FCR Console Positions	MPSR Positions	Days Staffed	Group Size	Salary
Flight	0	365	9	$778,068
CAPCOM	0	29	3	$259,356
MOD	0	N/A	N/A	N/A
Surgeon	0	29	3	$259,356
PAO	0	365	9	$778,068
GC	1	365	18	$1,556,136
EVA	1	29	6	$518,712
ELVIS	1	365	6	$518,712
SABER	3	365	36	$3,112,272
LIFE	2	365	27	$2,334,204
TEMPER	3	365	36	$3,112,272
VADER	3	365	36	$3,112,272
VEHICON	3	365	36	$3,112,272
STAR	2	365	27	$2,334,204
PAC-MAN	3	365	36	$3,112,272
CANDIES	2	365	27	$2,334,204
EMCEE	2	365	9	$778,068
RAT	1	365	6	$518,712
AT-AT	2	365	27	$2,334,204
DART	2	206	18	$1,556,136
HYPER	2	55	9	$778,068

Table 11-16. Trailblazer LTV Program Total Costs

Cost Source	Cost (Billions)
Communications Network	$0.82
Vehicle Development and Production	$22.14
Spacecraft Propellant	$0.03
Launch Vehicles	$14.56
Mission Operations	$2.82
Total Program Costs	$40.37

Table 11-17. Trailblazer LTV Costs by Fiscal Year (First expeditions in FY 2010)

Fiscal Year	Cost (Billions)
2003	$3.28
2004	$3.28
2005	$3.28
2006	$3.28
2007	$3.29
2008	$3.76
2009	$3.76
2010	$4.57
2011	$3.96
2012	$3.96
2013	$3.96

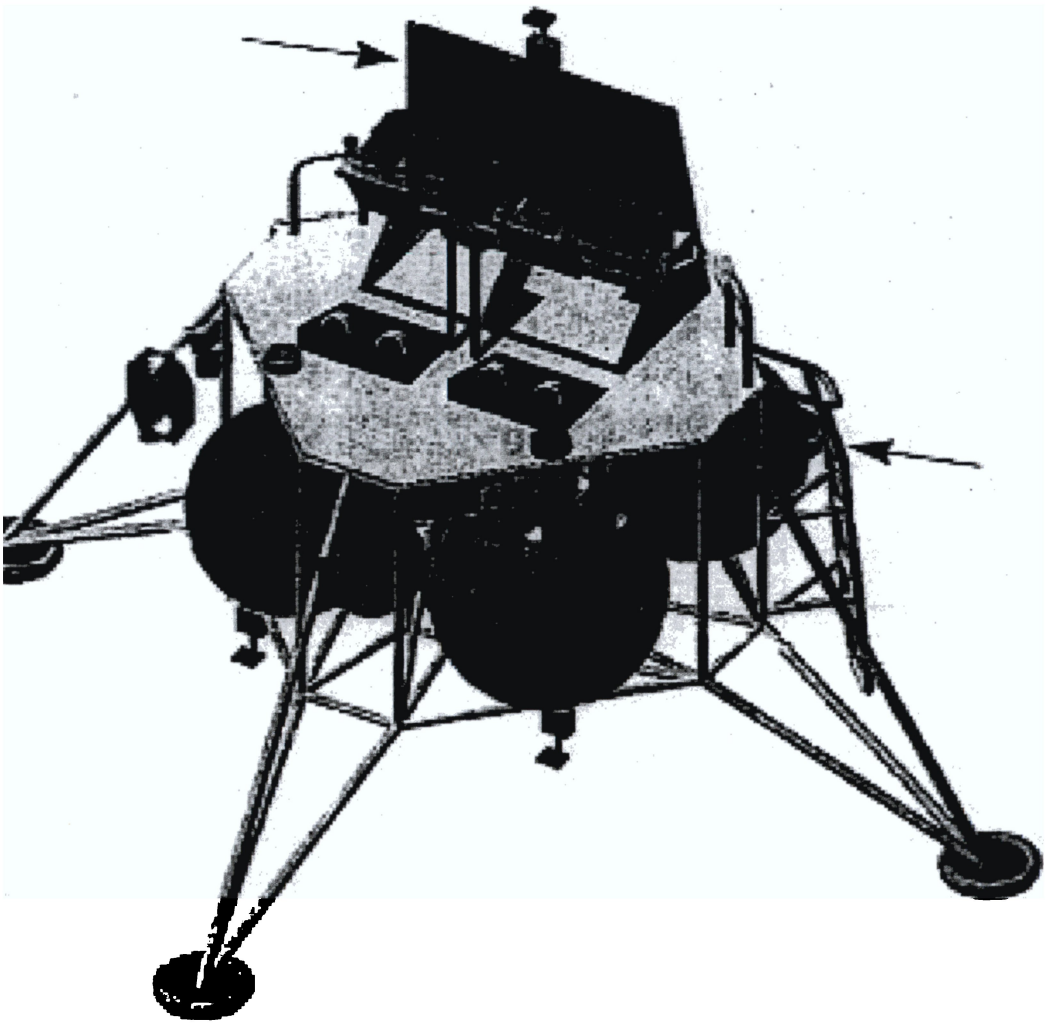

Figure 2-1. HLR Open Cockpit Lander

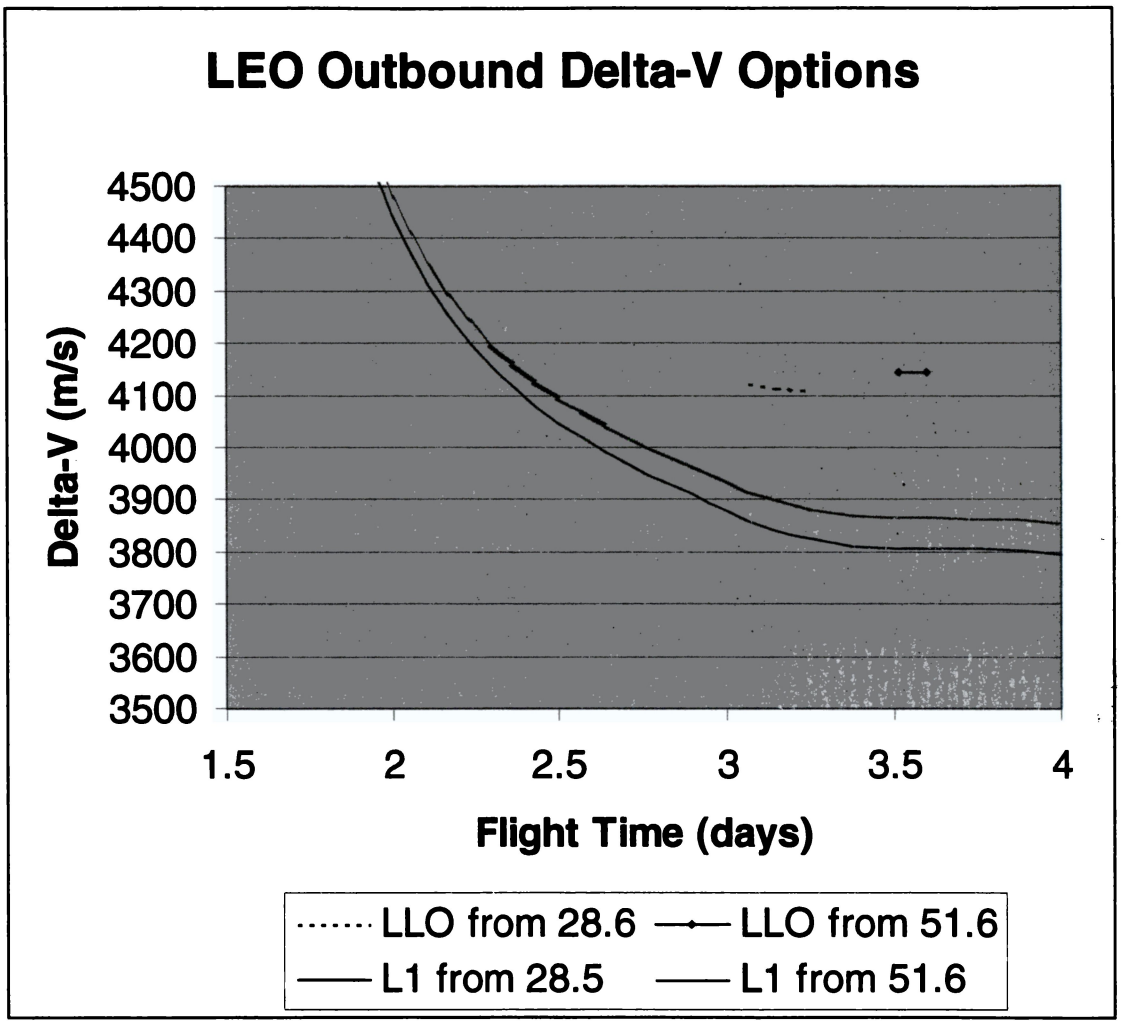

Figure 3-1. LEO Outbound Delta-v Options

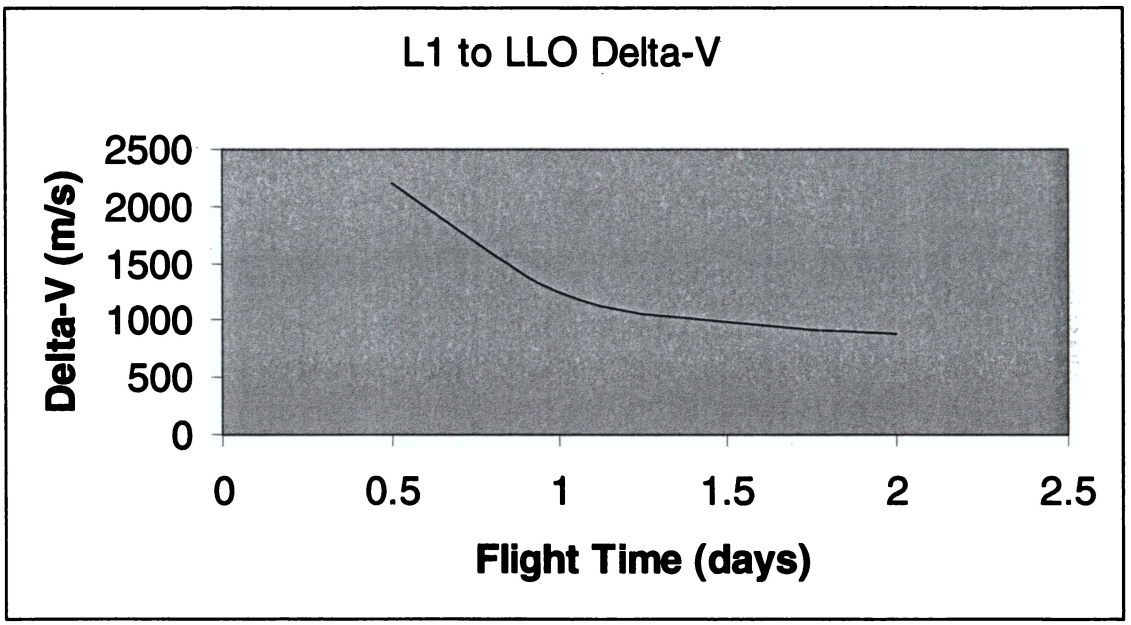

Figure 3-2. Delta-v and Flight Time from L1 to LLO

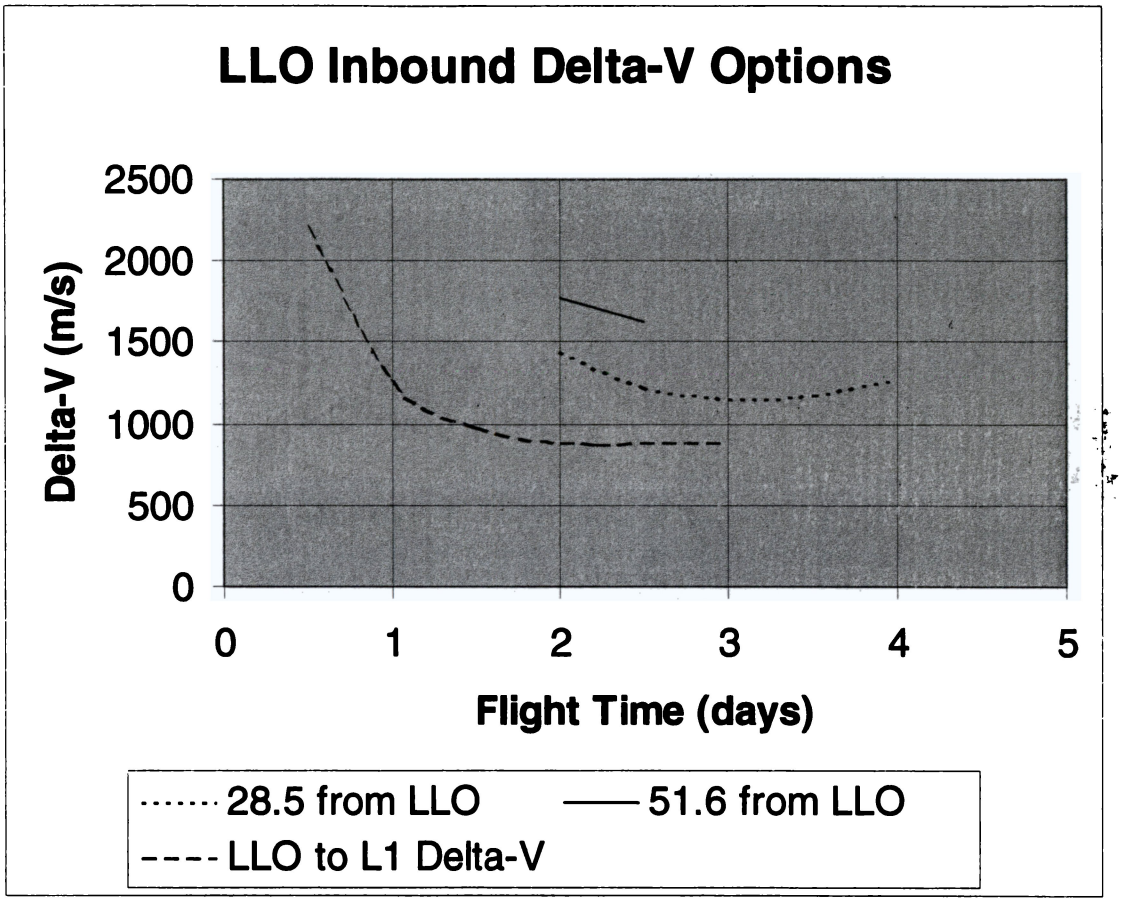

Figure 3-3. LLO Inbound Delta-v Options

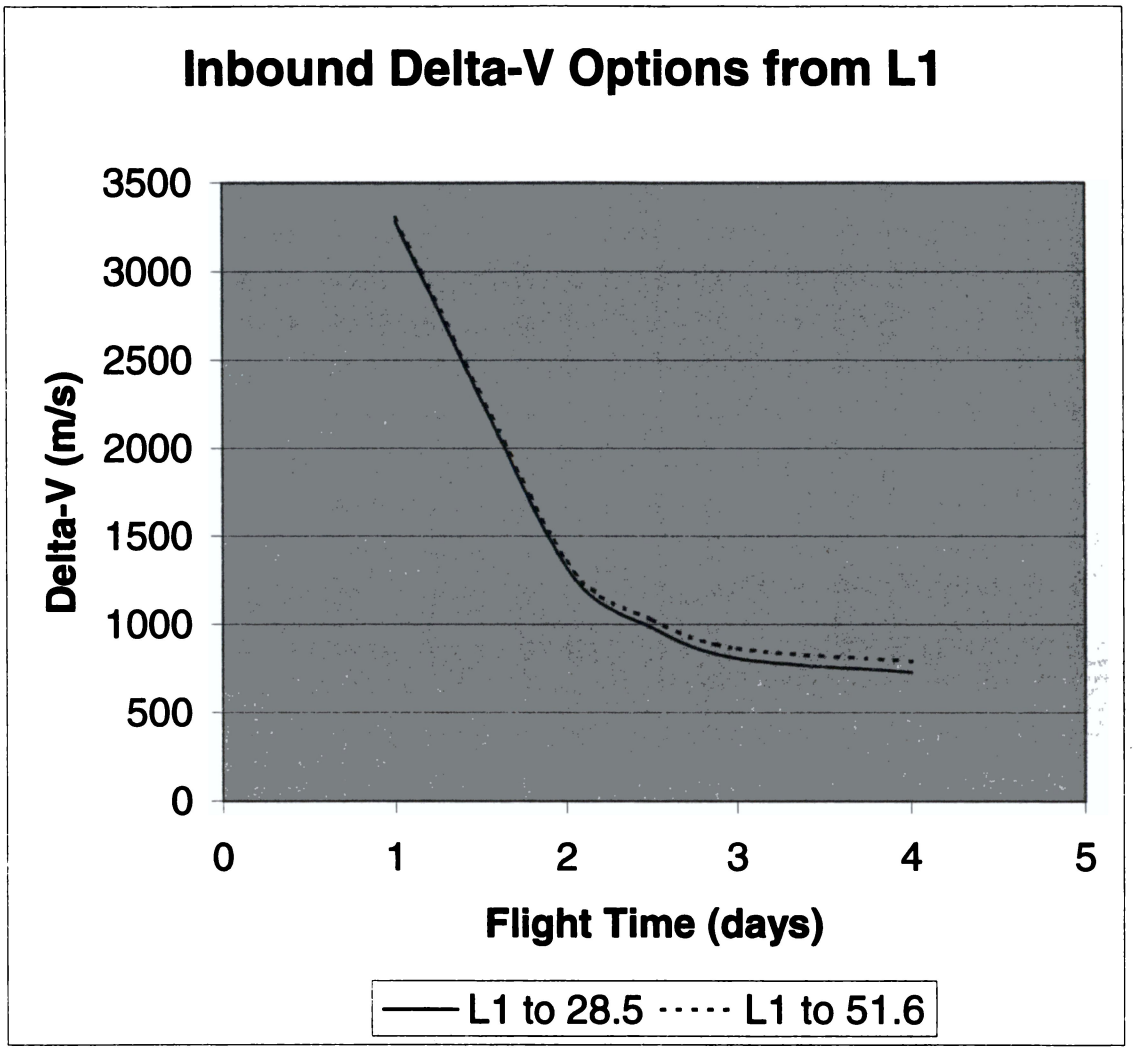

Figure 3-4. L1 Inbound Delta-V Options

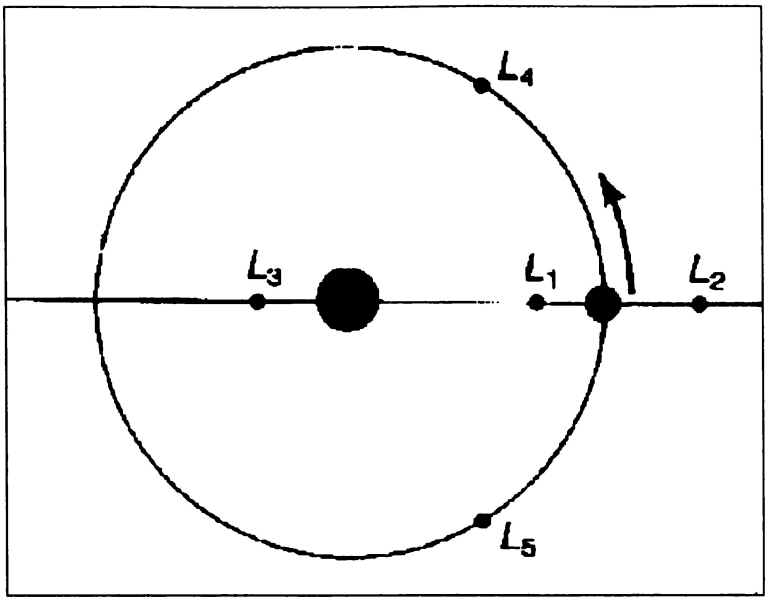

Figure 3-5. Earth-Moon System Equilibrium Points

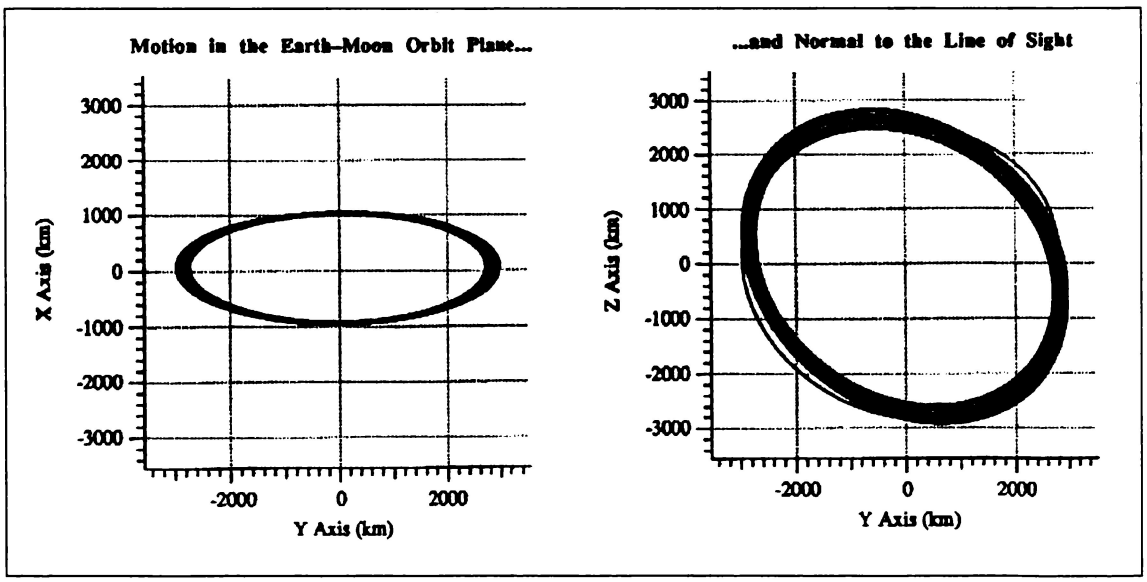

Figure 3-6. The Halo Orbit (Hoffman, 1993).

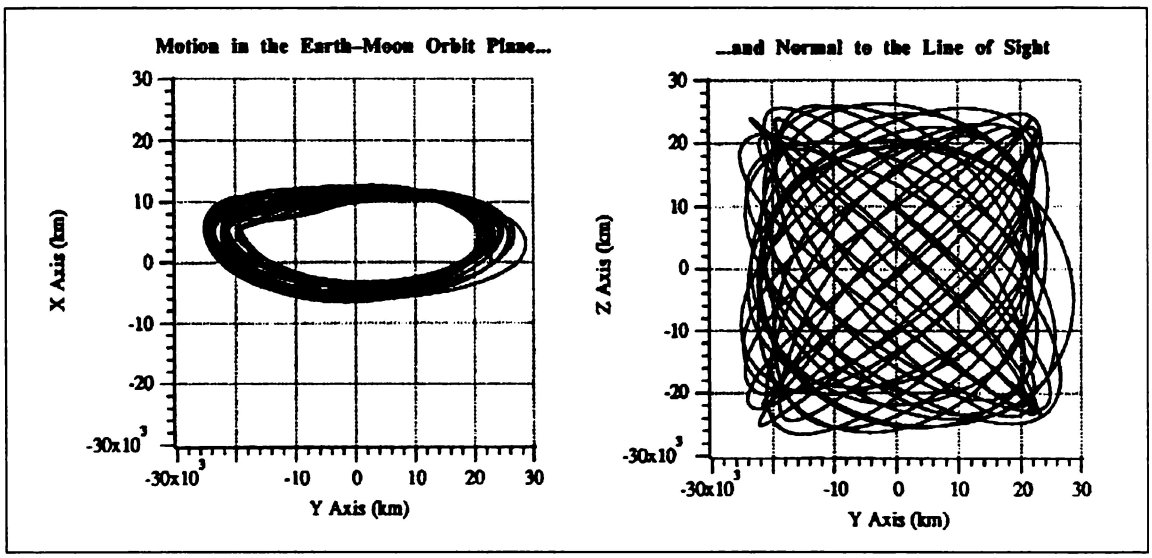

Figure 3-7. The Large Lissajous Orbit (Hoffman, 1993).

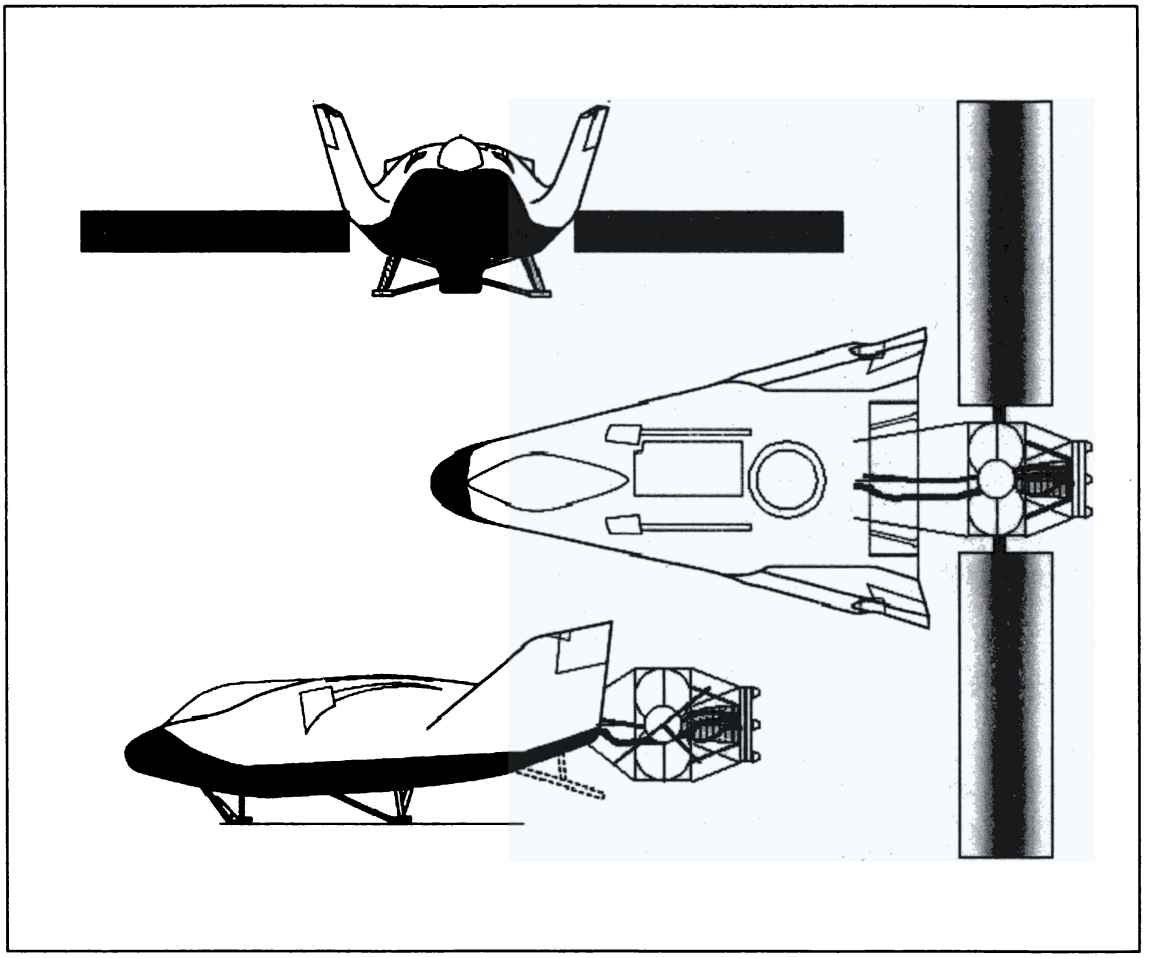

Figure 4-1. Crew Module

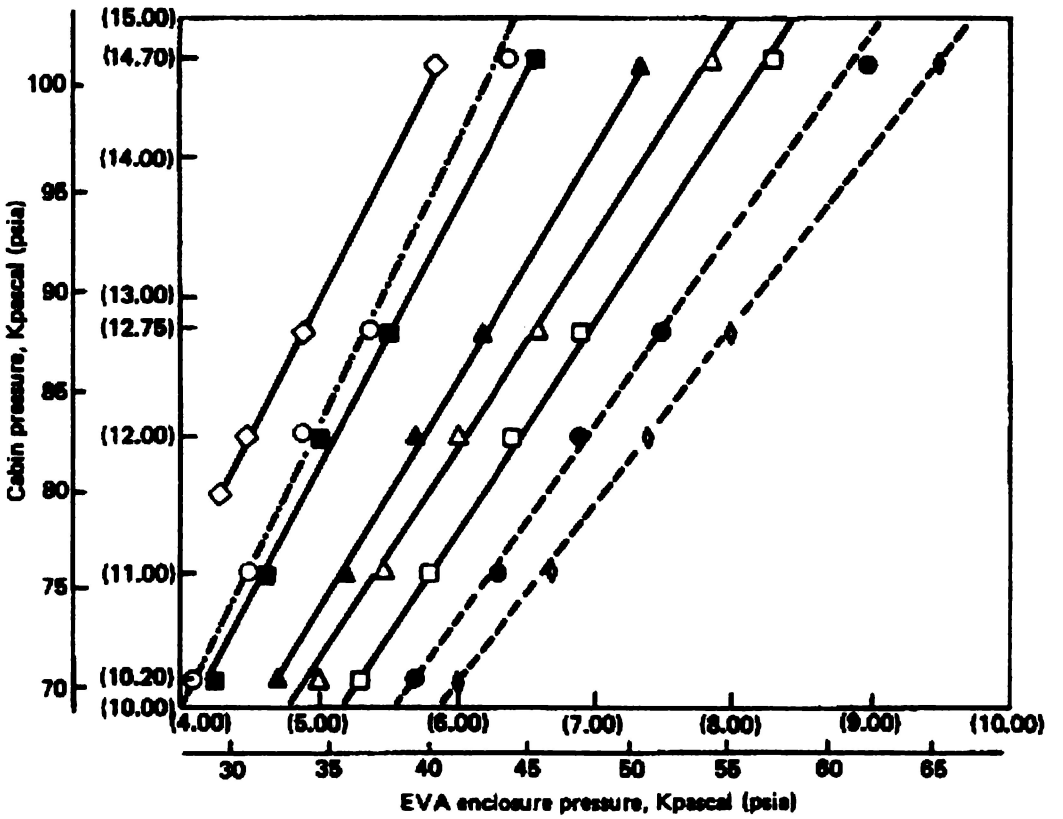

- ◊ R = 1.22, No O_2 prebreathe
- ● R = 1.22, 30 minutes O_2 prebreathe
- □ R = 1.40, No O_2 prebreathe
- △ R = 1.40, 30 minutes O_2 prebreathe
- ▲ R = 1.40, 1 hr O_2 prebreathe
- ■ R = 1.40, 2 hr O_2 prebreathe
- ◇ R = 1.40, 3 hr O_2 prebreathe
- ○ R = 1.80, For purge operation suit pressure, not to exceed 30 minutes exposure

	R = 1.22	R = 1.40
% Symptoms	0	5
% Bubbles	20	35
Maximum grade of bubbles *	2	4

* Bubble grades

0 - None

1 - Bubbles in less than 1/2 heart sounds

2 - Bubbles in more than 1/2 heart sounds

3 - Bubbles in each heart sound

4 - Bubbles obscuring heart sounds

Figure 4-2. EVA Suit Pressure, Cabin Pressure, and R-Factor (NASA STD 3000, 1994).

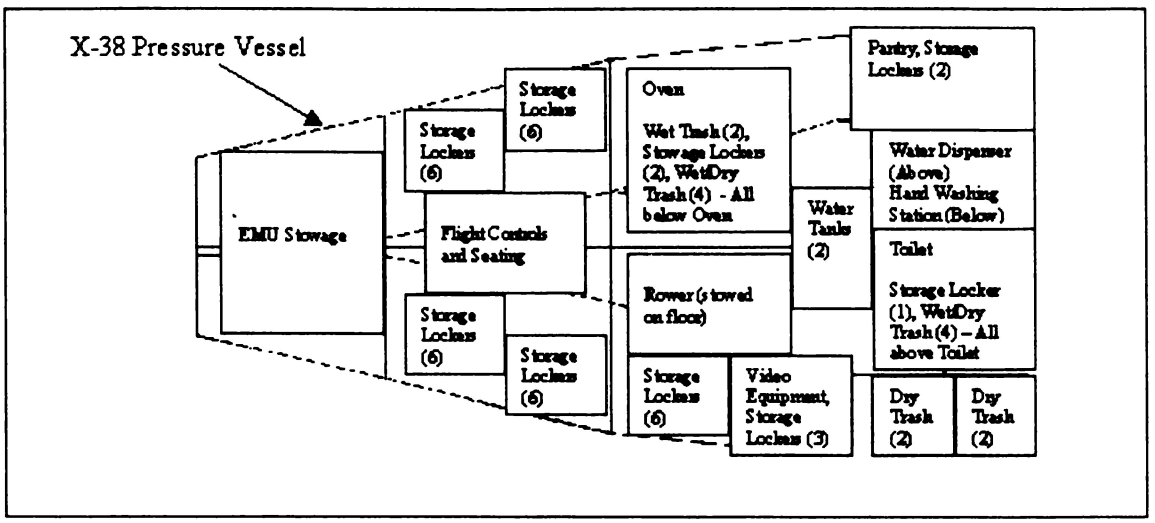

Figure 4-3. Crew Accommodations Layout

Figure 4-4. CT-63X Star Sensor (CT-63X, 2002).

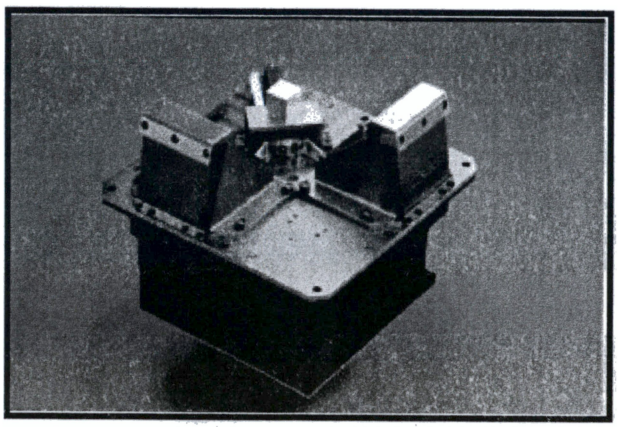

Figure 4-5. MiDES Horizon Sensor (MiDES, 2002).

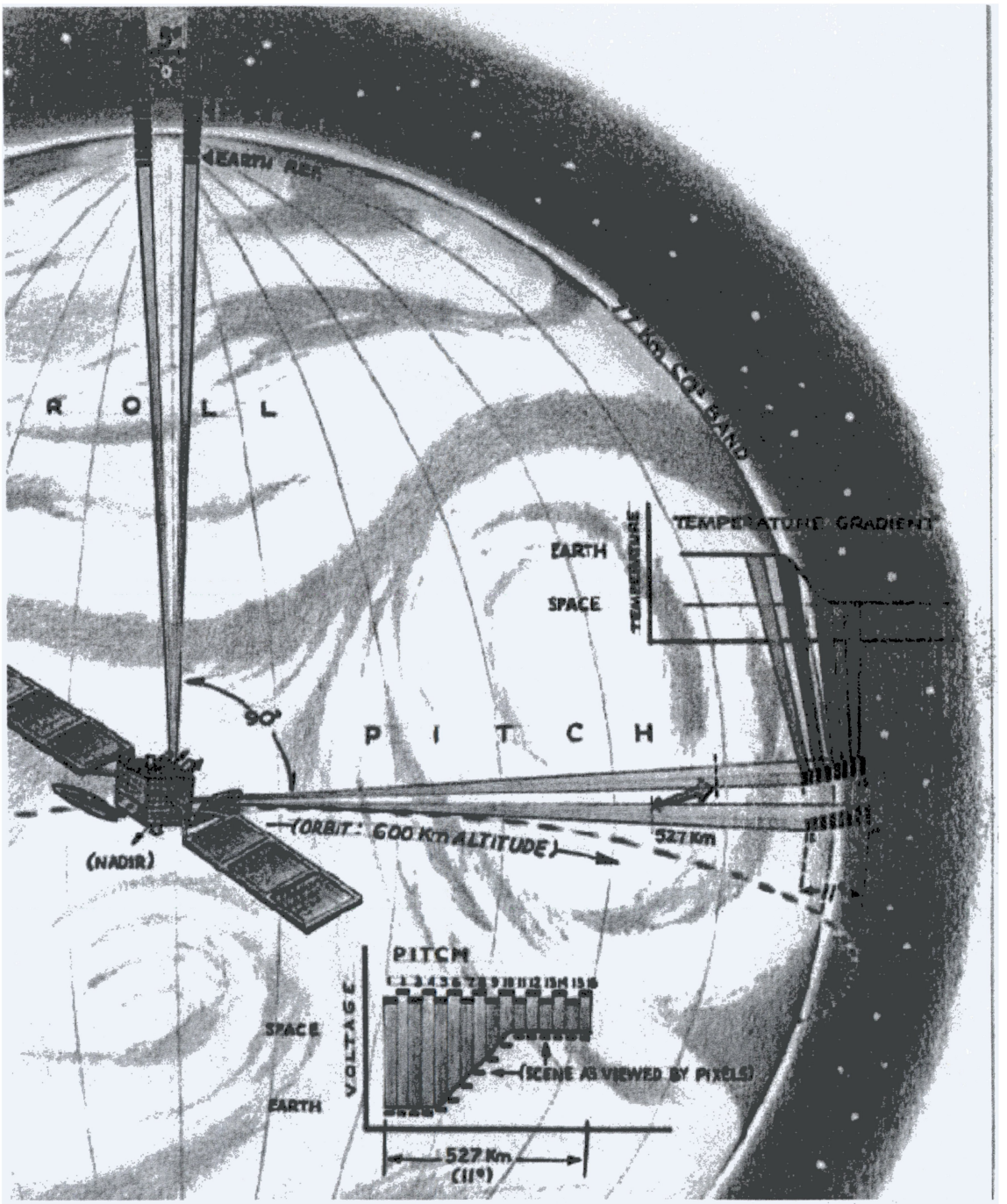

Figure 4-6. MiDES Operation Illustration (MiDES, 2002).

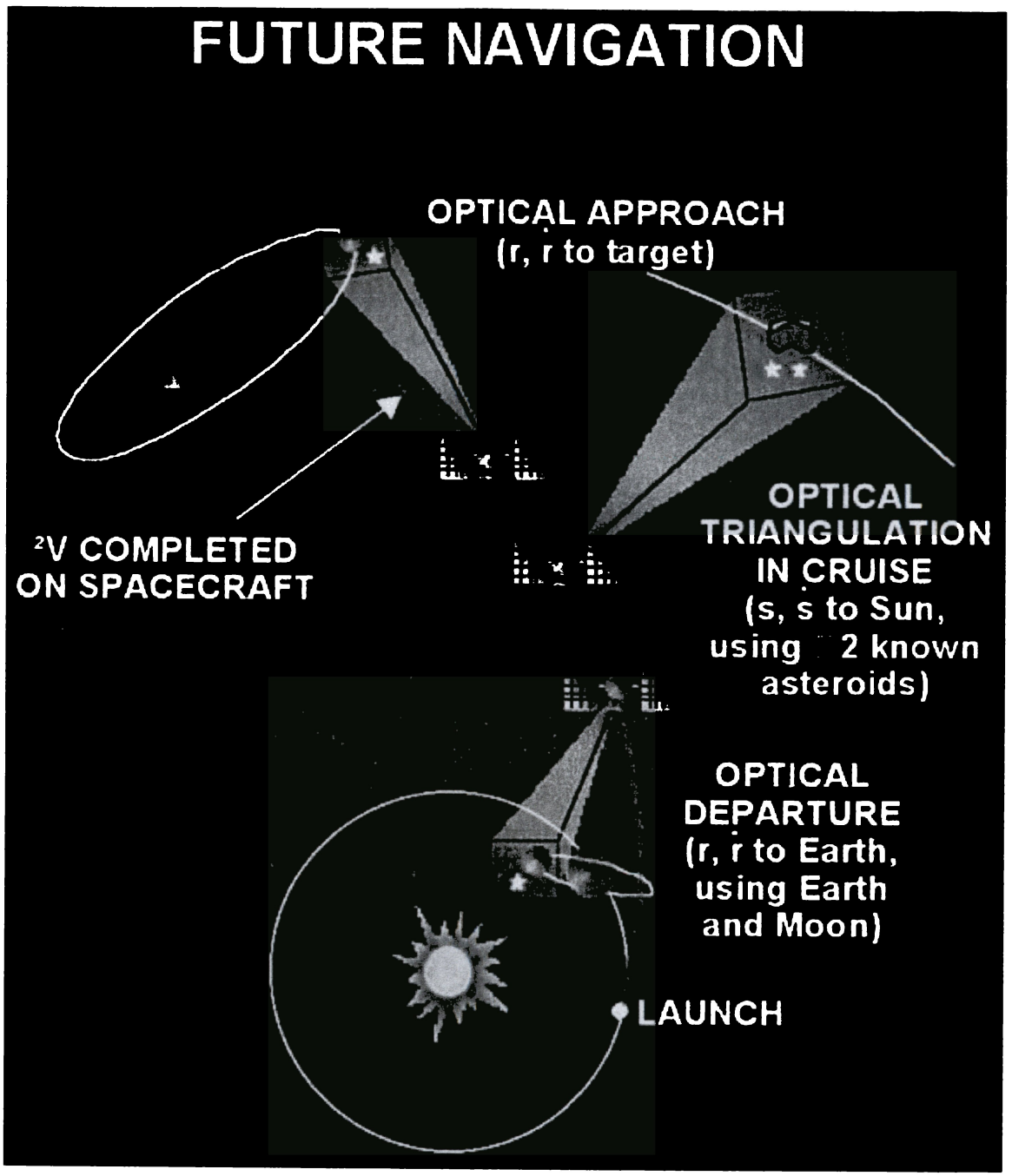

Figure 4-7. AutoNav Optical Navigation (Autonomous Navigation, 2002).

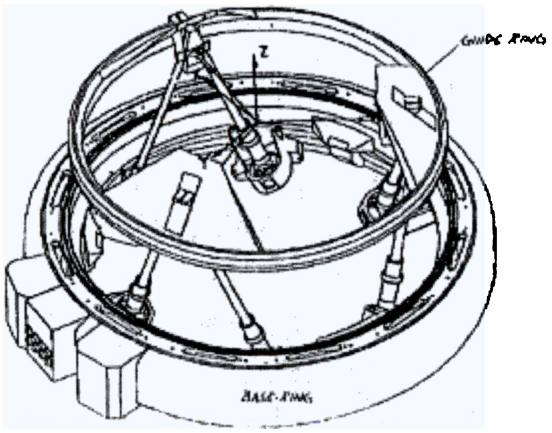

Figure 4-8. APAS docking mount (Schneider, et al, 1996).

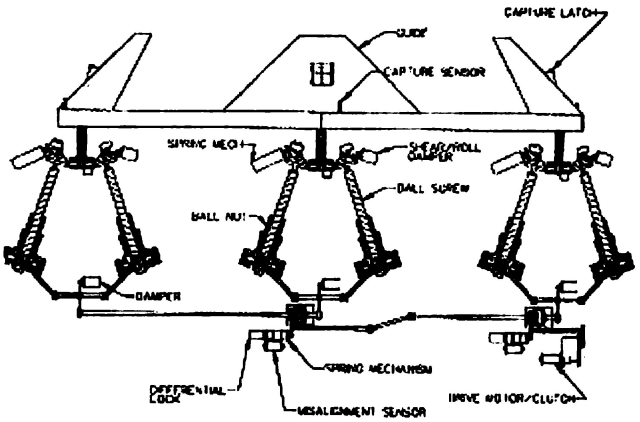

Figure 4-9. APAS docking mechanism (Schneider, et al, 1996).

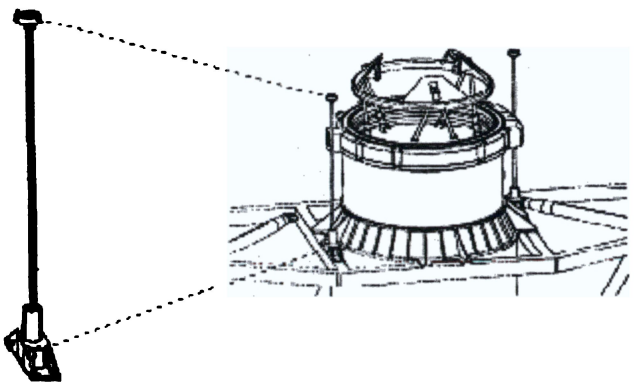

Figure 4-10. APAS with MDAS extendible boom (Schneider, et al, 1996).

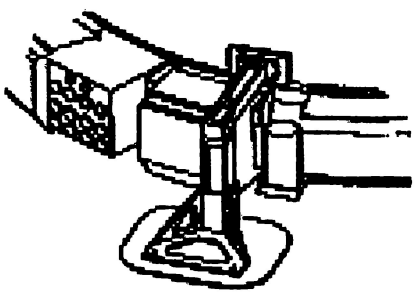

Figure 4-11. MDAS Steel Plate

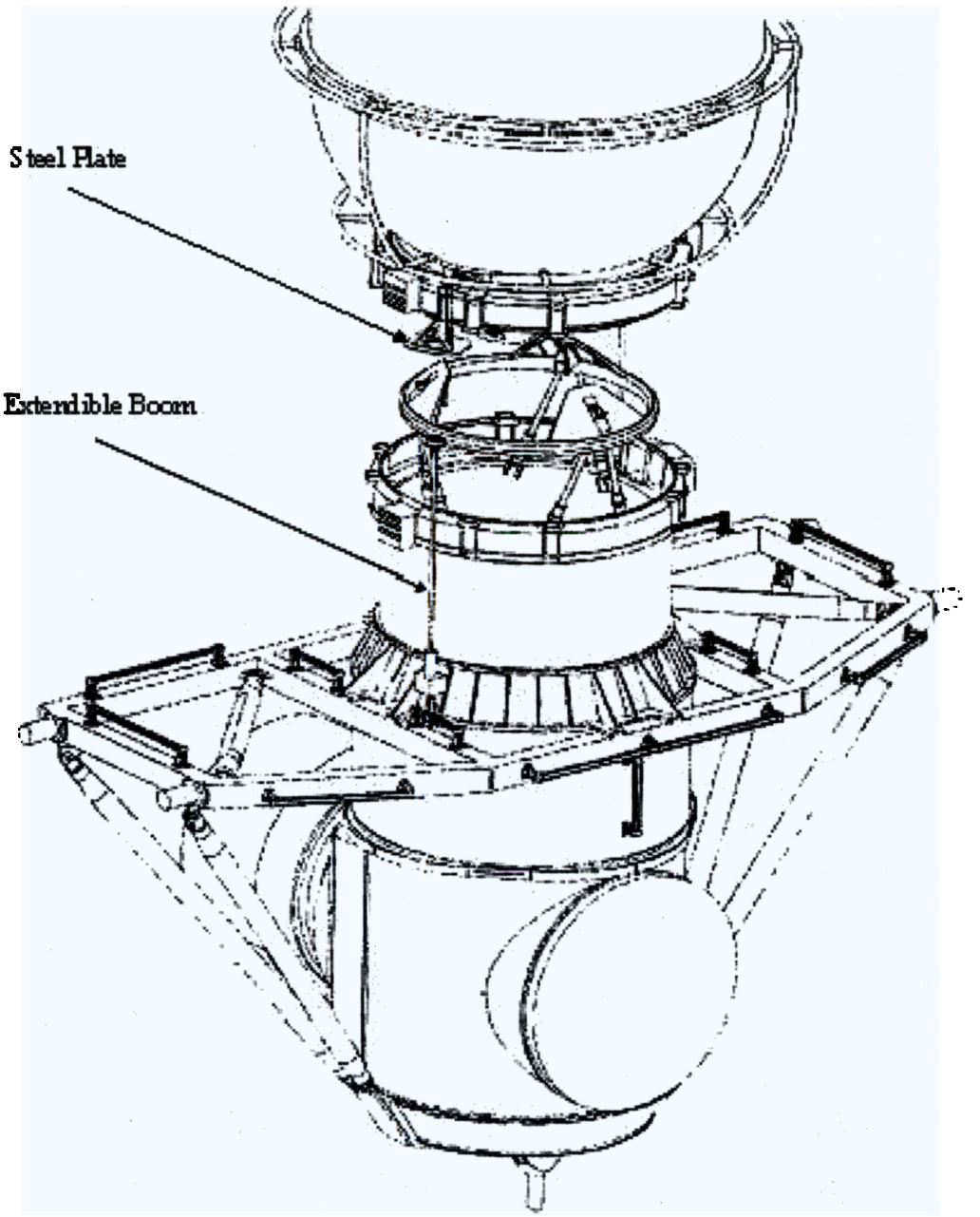

Figure 4-12. MDAS in docking position (Schneider, et al, 1996).

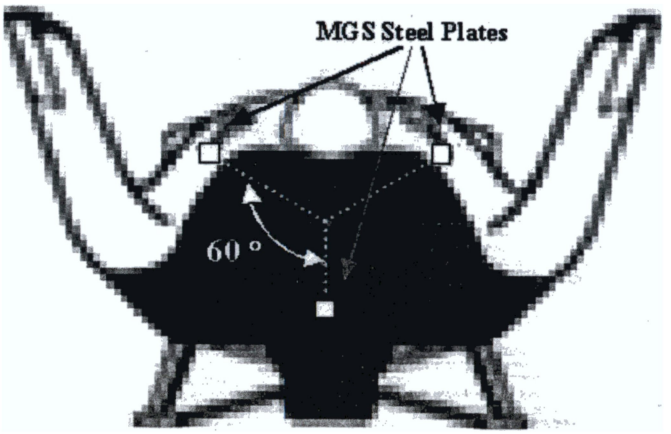

Figure 4-13. MGS Steel Plate Orientation

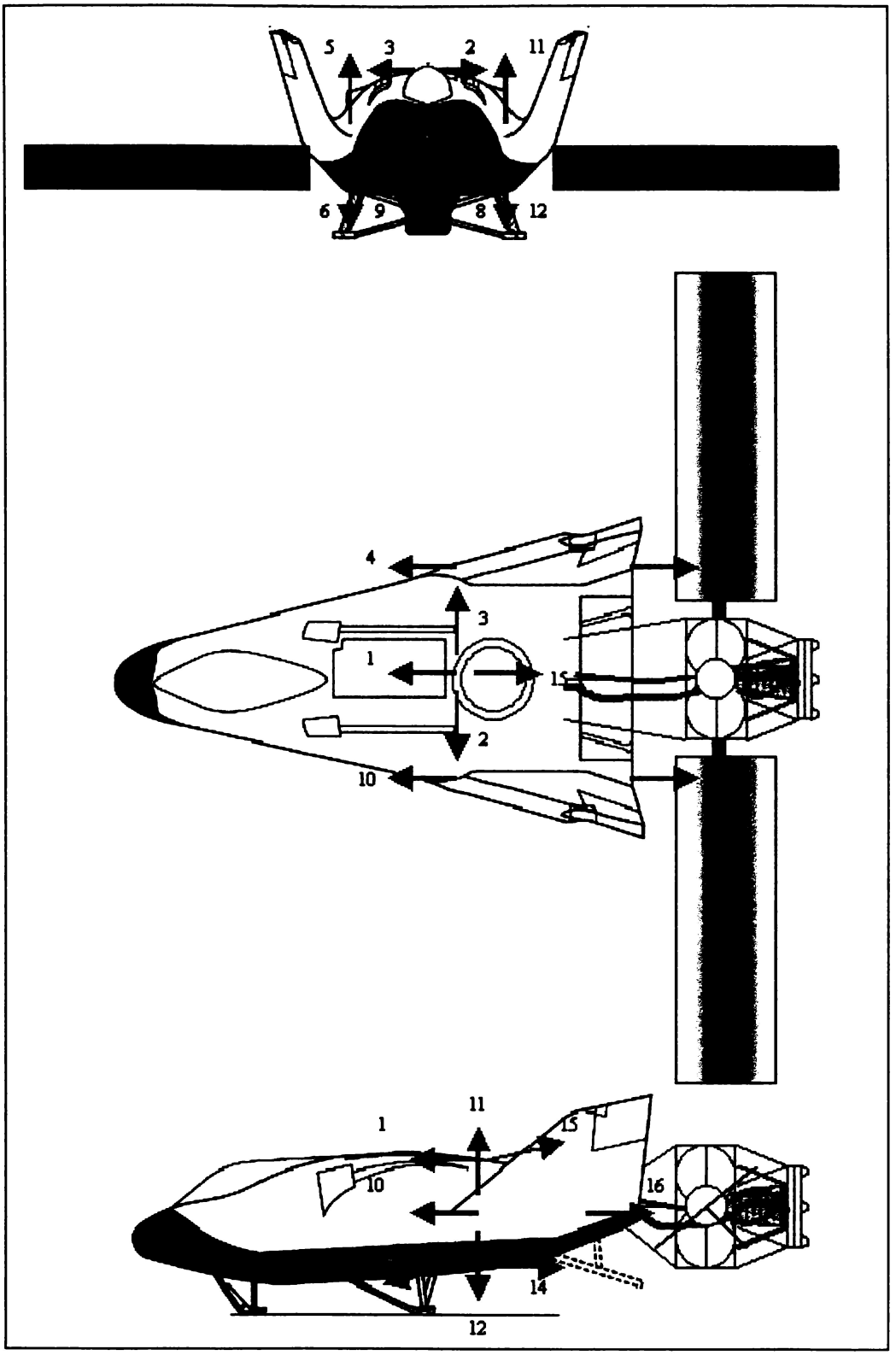

Figure 4-14. CM ACS Thruster Locations

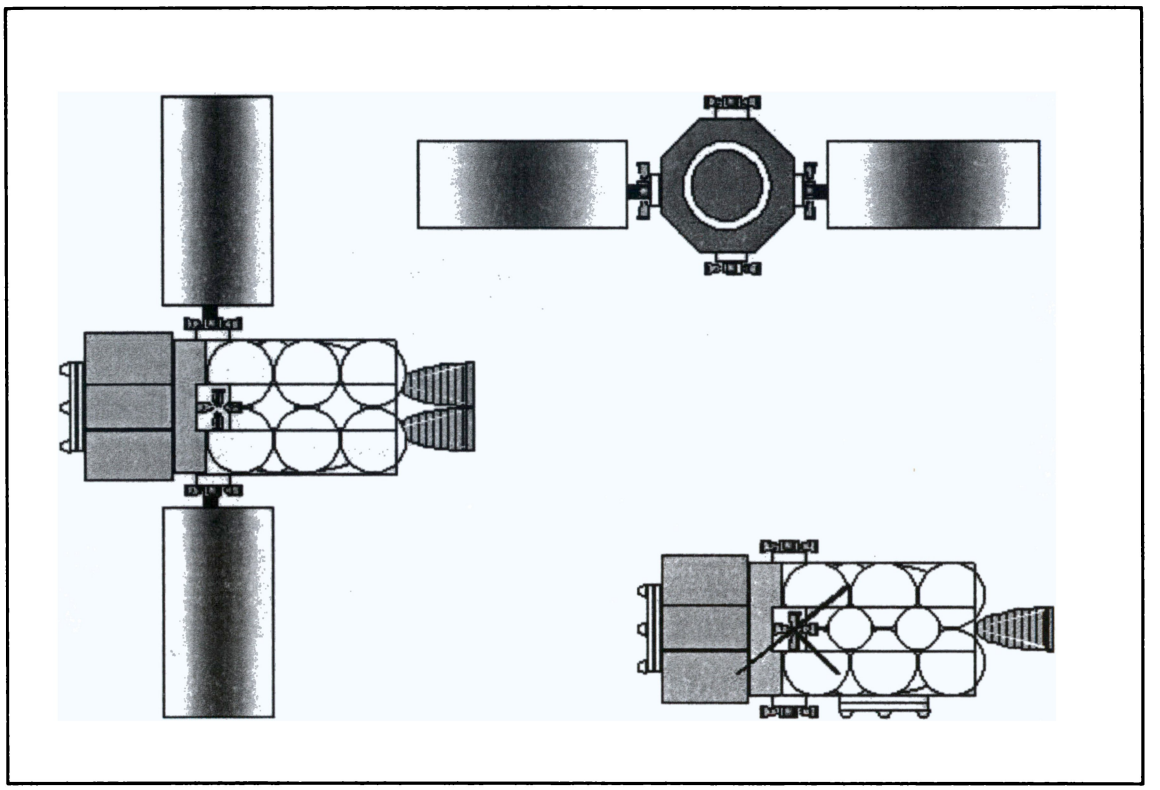

Figure 5-1. Propulsion Module 1

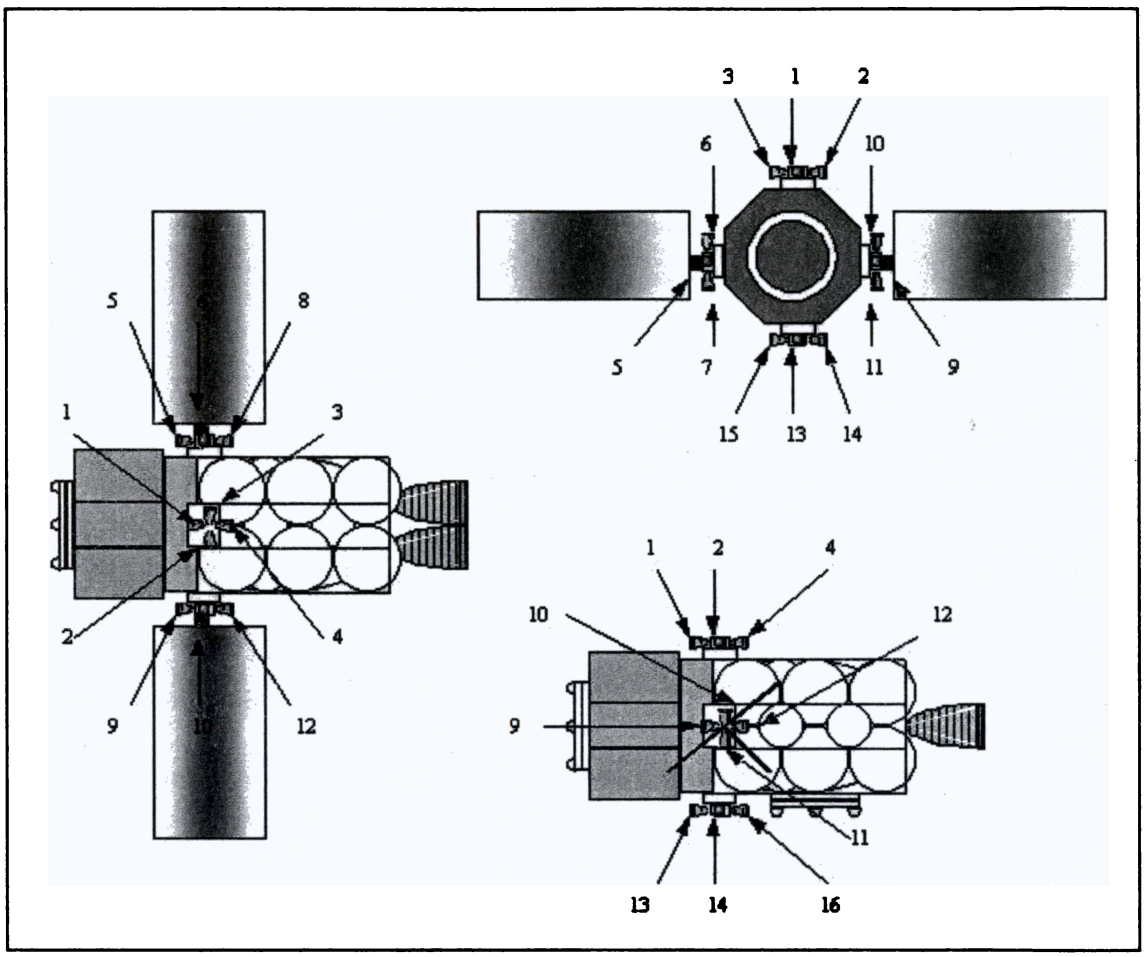

Figure 5-2. PM1 ACS Thruster Locations

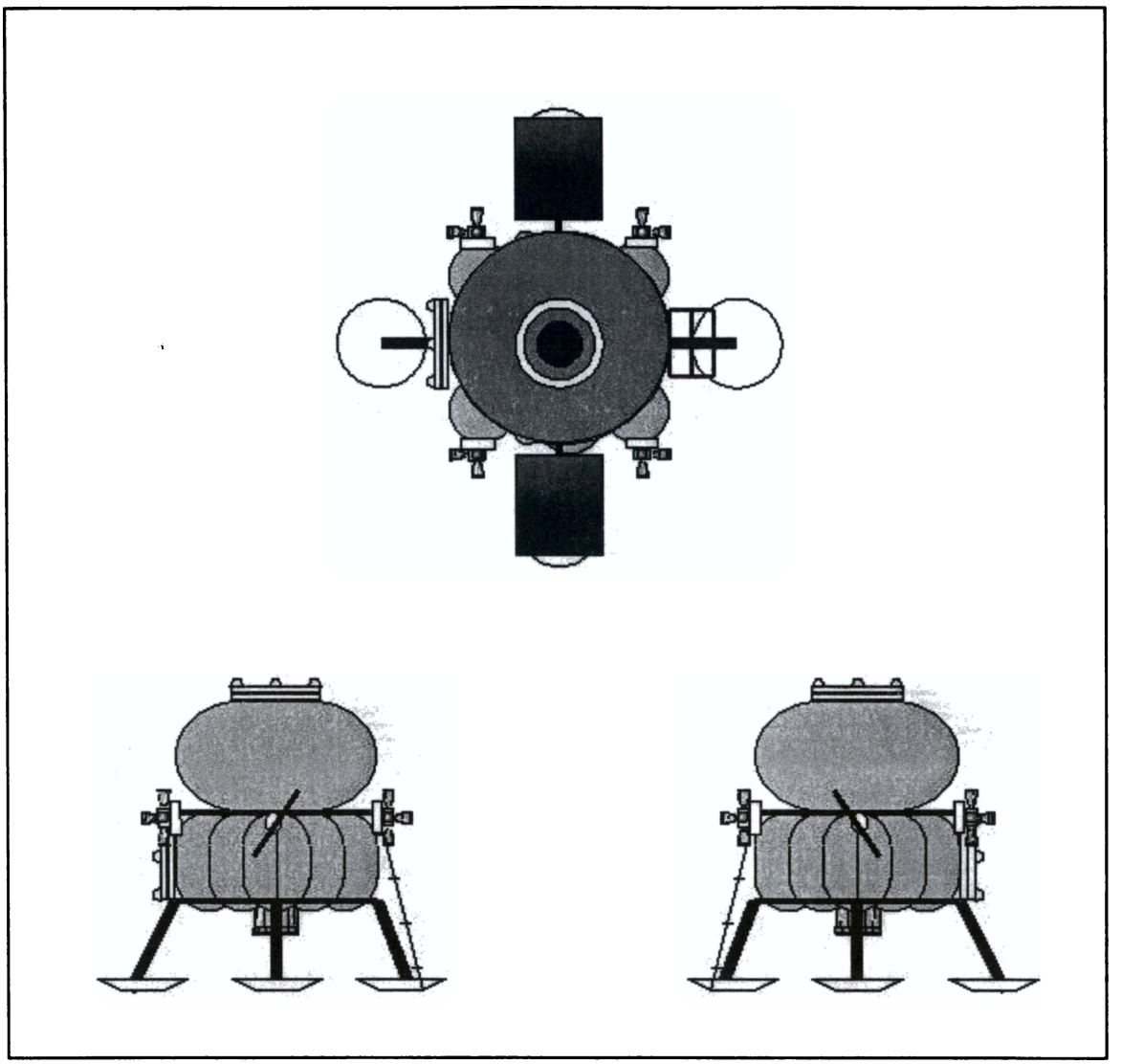

Figure 6-1. Ascent Descent Vehicle

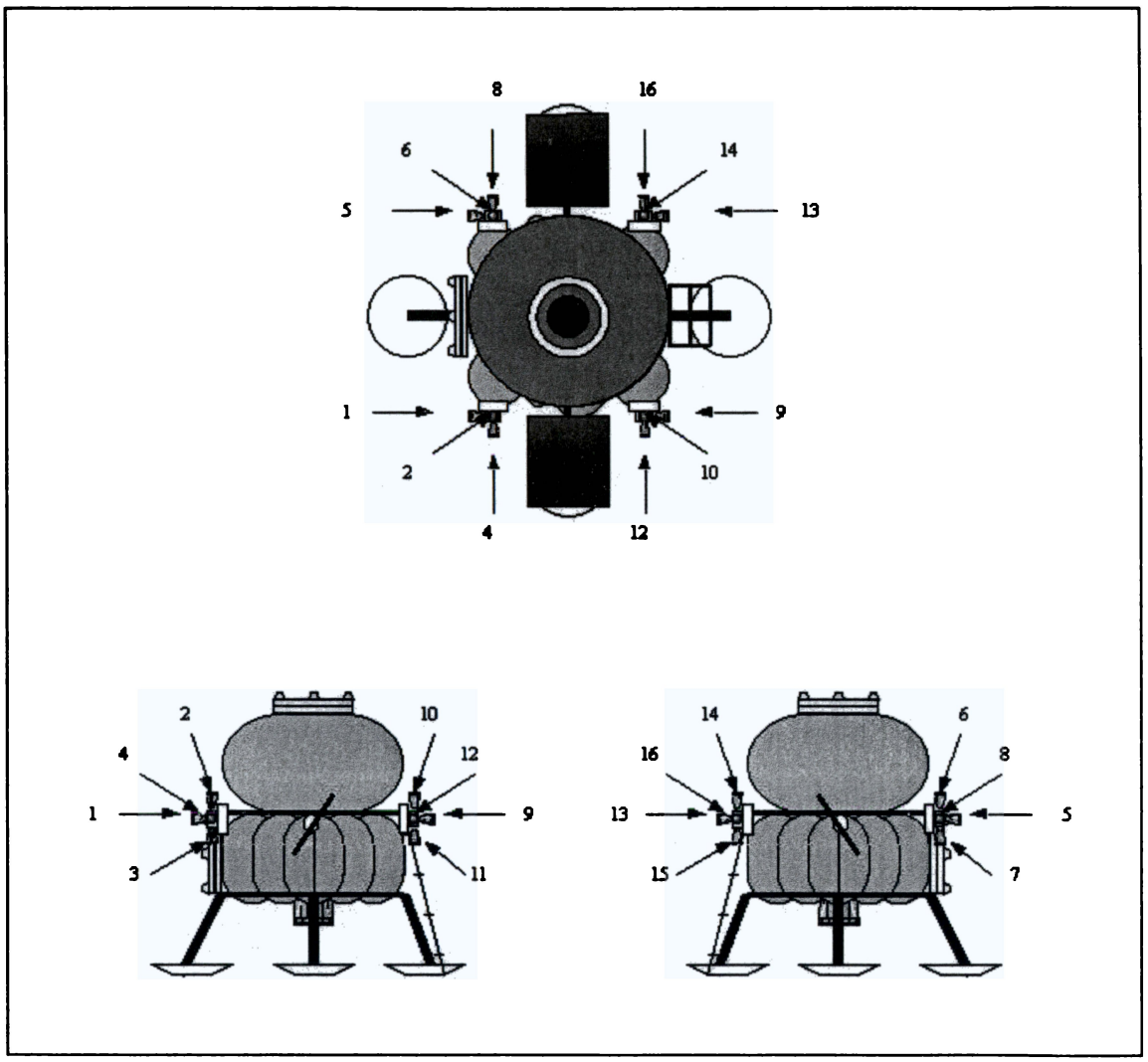

Figure 6-2. ADV ACS Thruster Locations, Side and Top Views

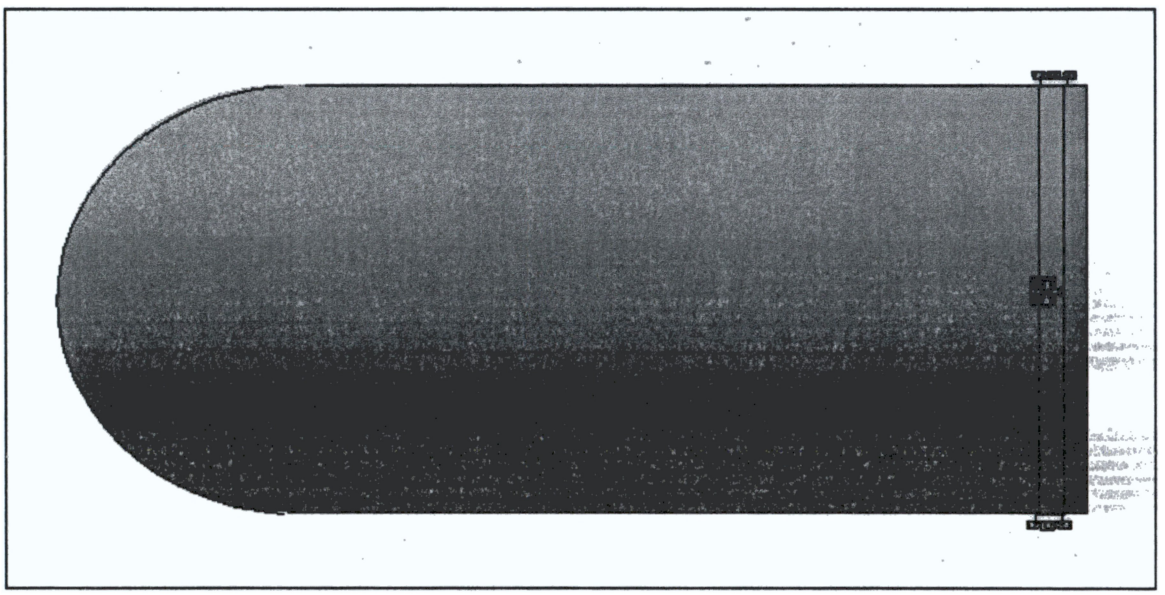

Figure 7-1. Aeroshell Module: Domed Cylinder Configuration

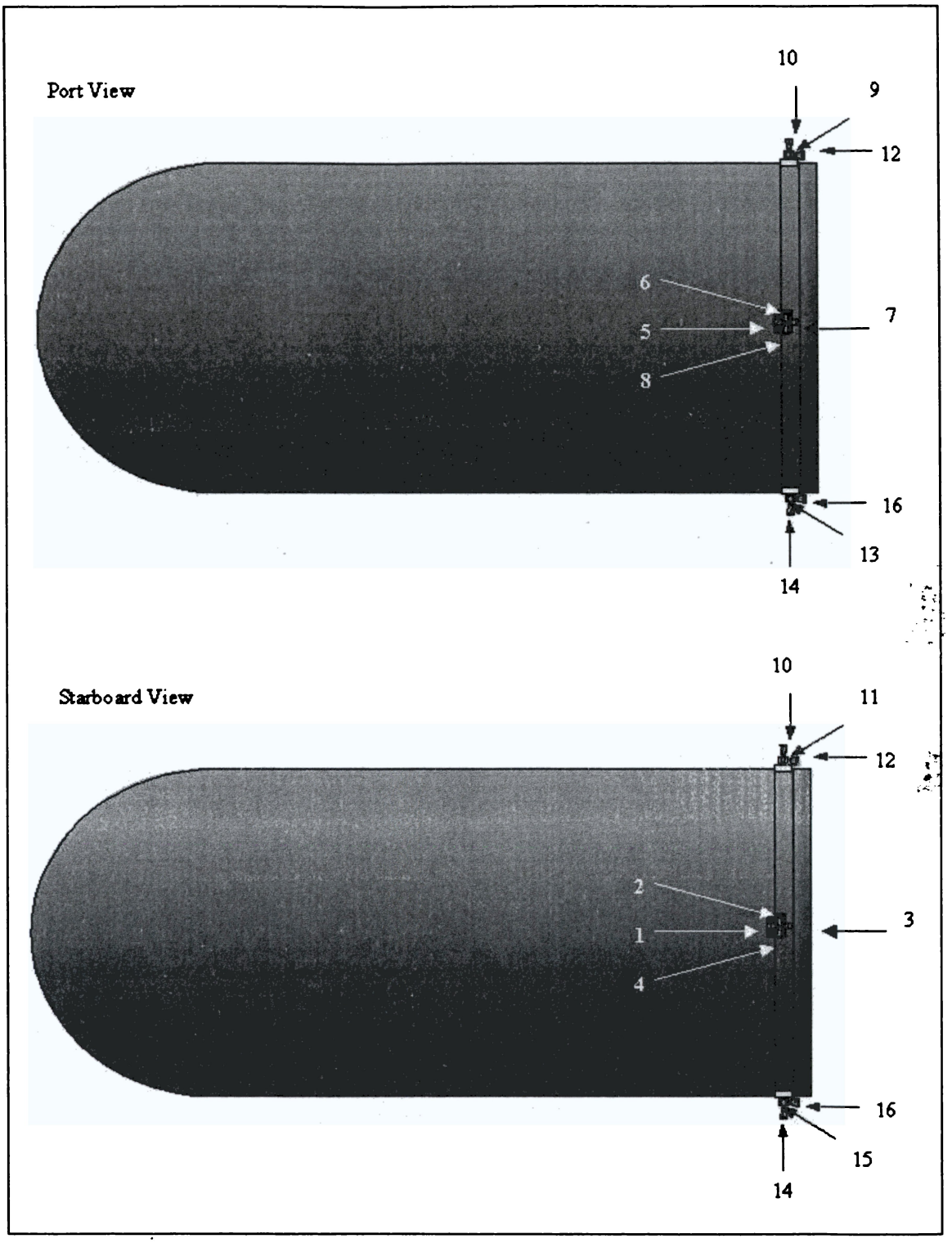

Figure 7-2. AM RCS Thruster Engine Numbering

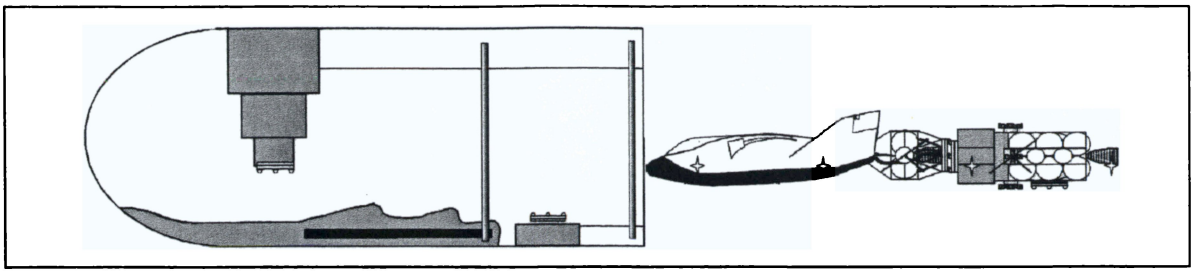

Figure 7-3. LTV Preparing to Enter Aerocapture Module

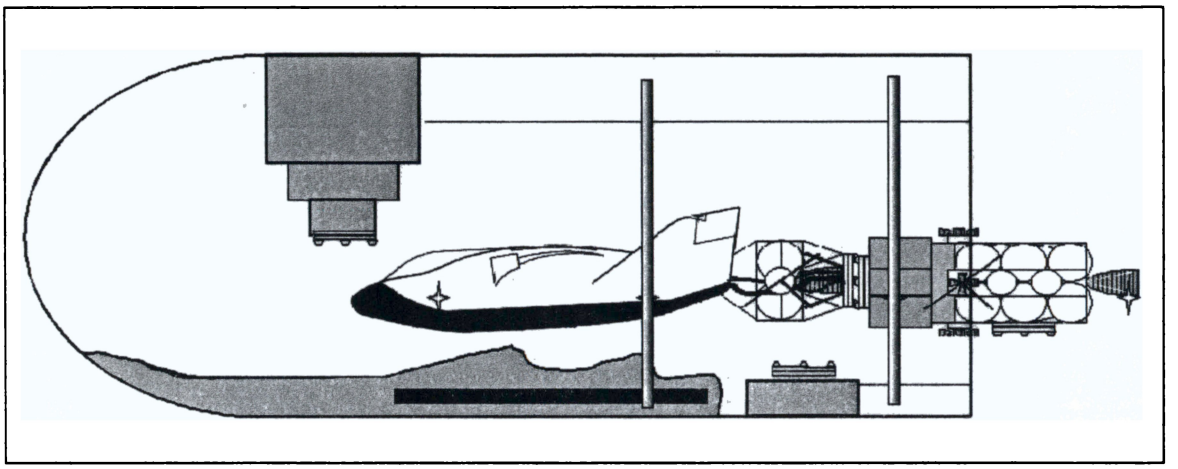

Figure 7-4. LTV Retraction into Aerocapture Module

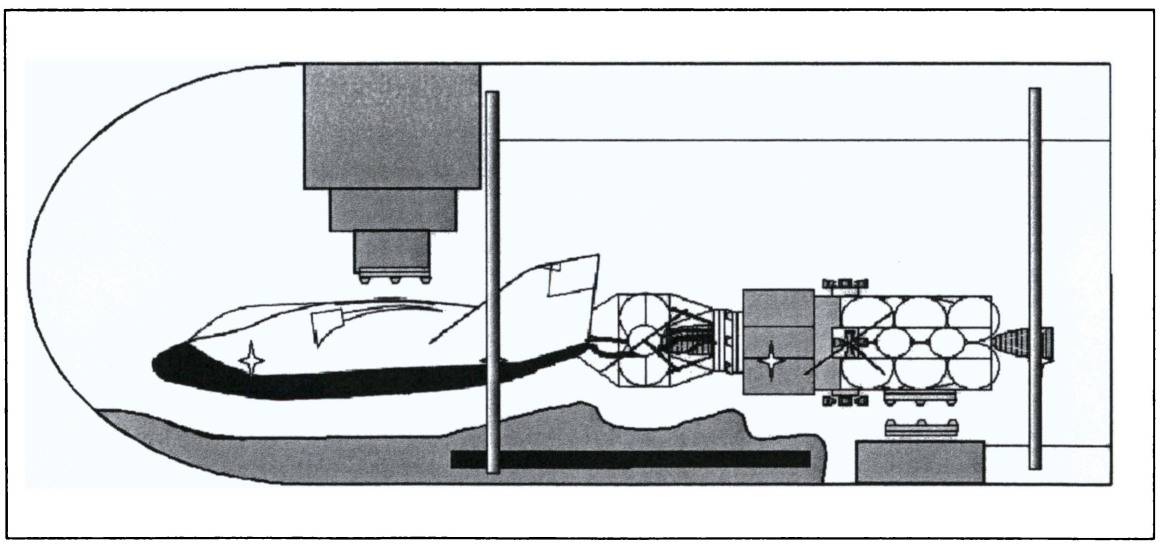

Figure 7-5. LTV Positioning at Docking Mounts

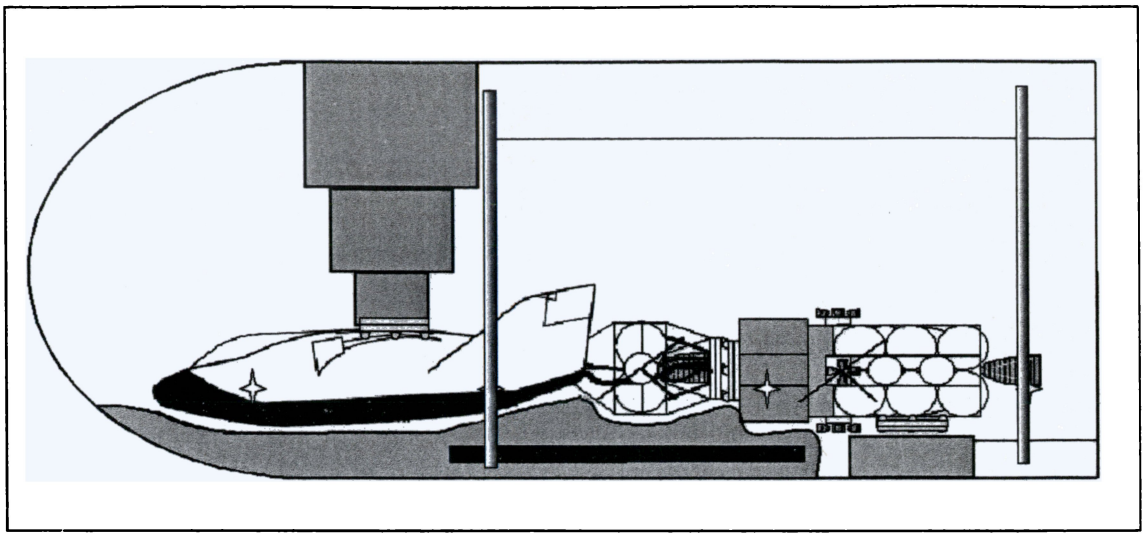

Figure 7-6. LTV Docked with AM

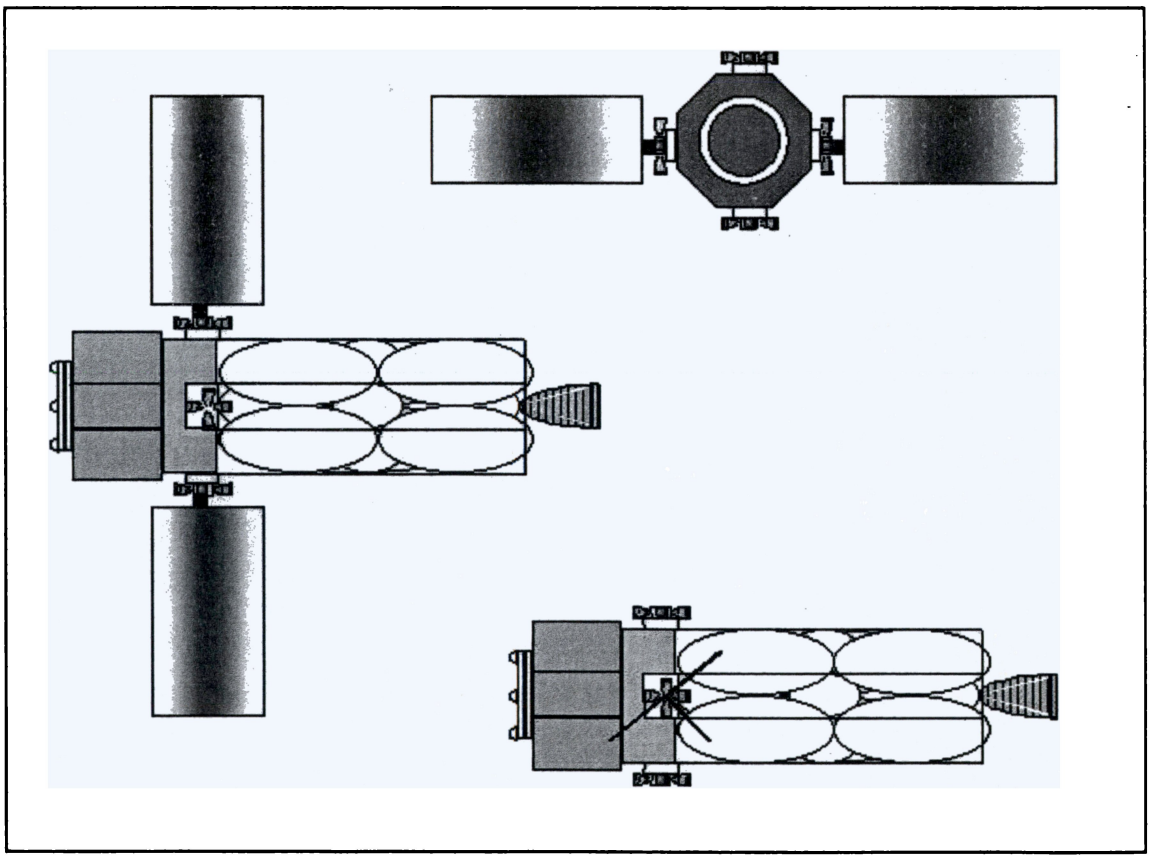

Figure 8-1. Fuel Tanker

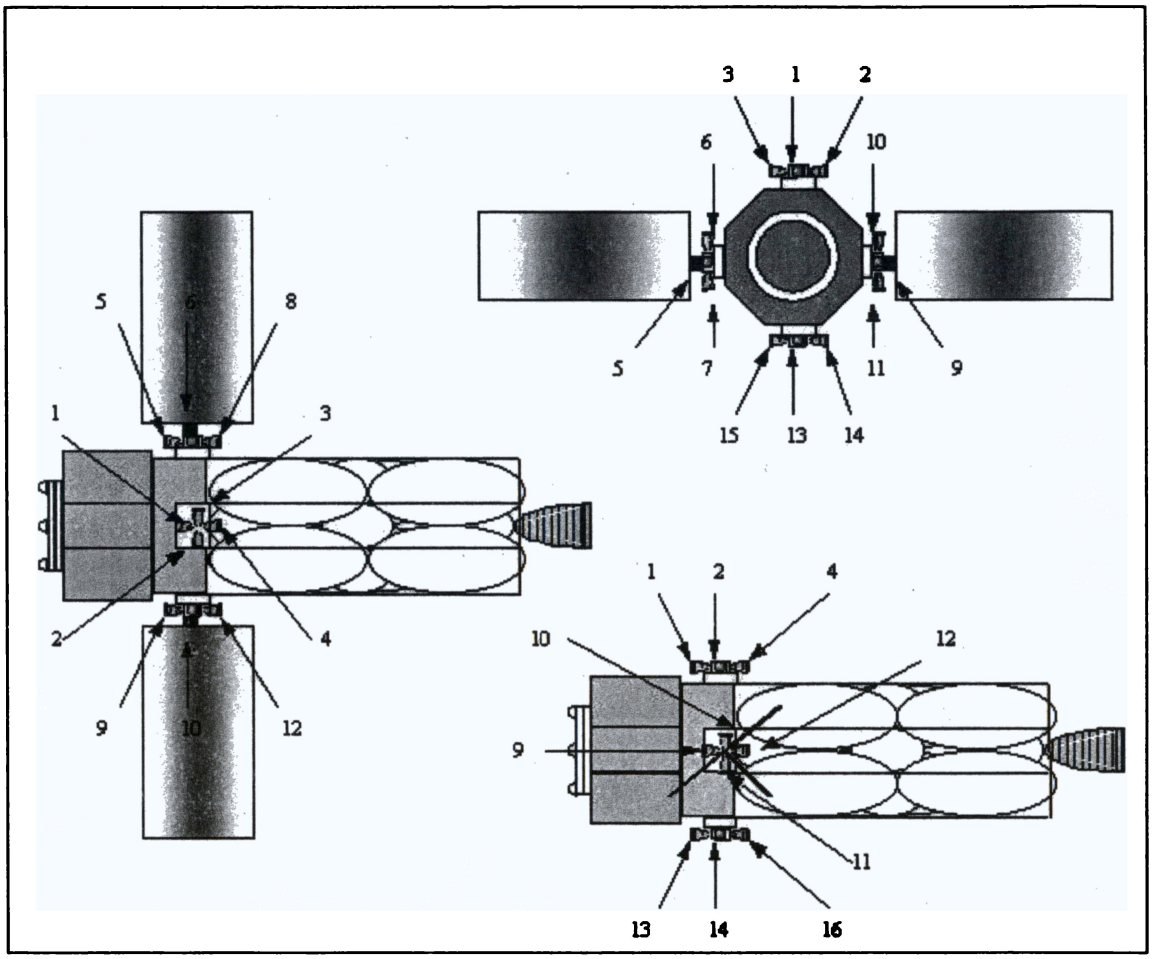

Figure 8-2. Fuel Tanker ACS Thruster Locations

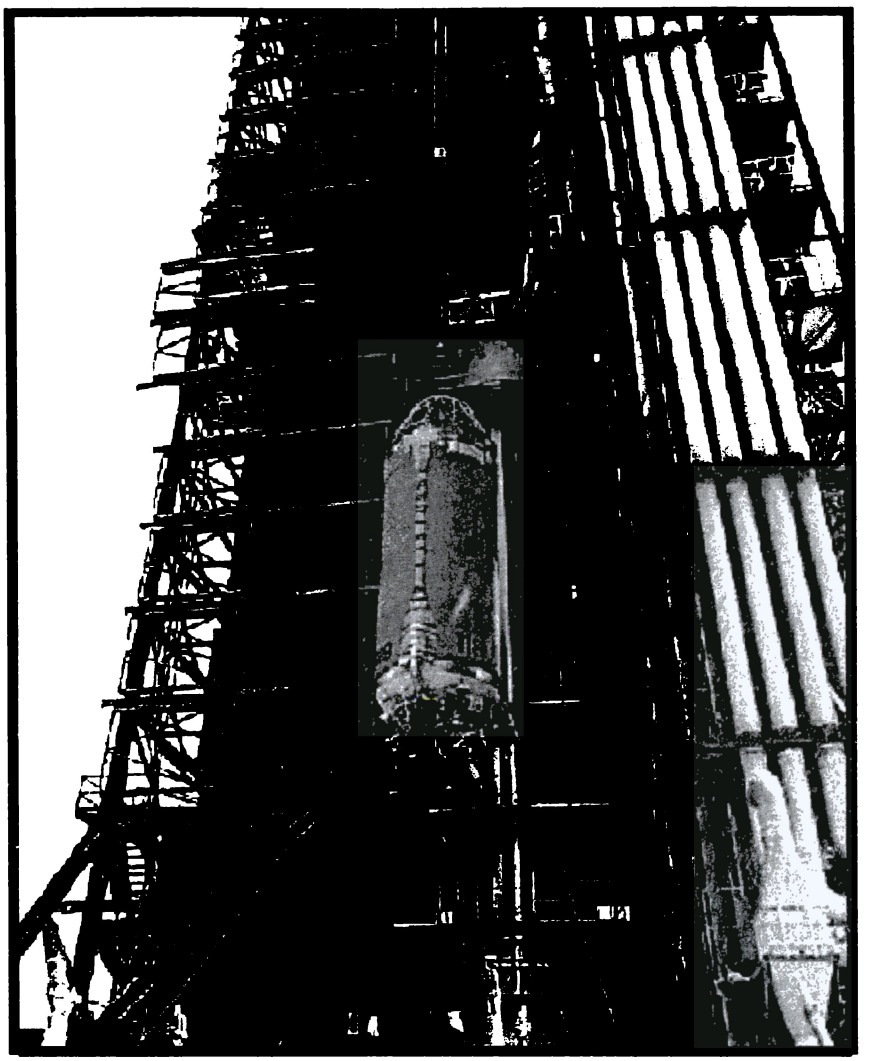

Figure 9-1. Centaur Upper Stage (Atlas Launch System Mission Planner's Guide, 2001)

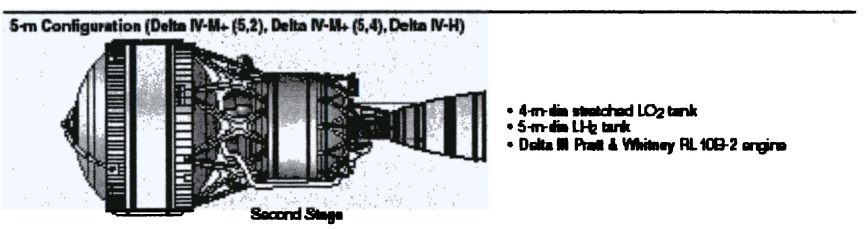

Figure 9-2. Delta 4-2 Upper Stage (Delta IV Payload Planners Guide, 2000)

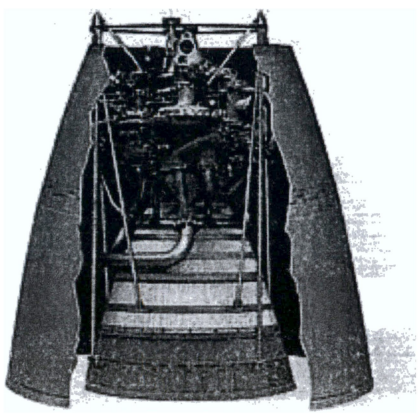

Figure 9-3. RL-10B-2 (RL-10B-2, 2002)

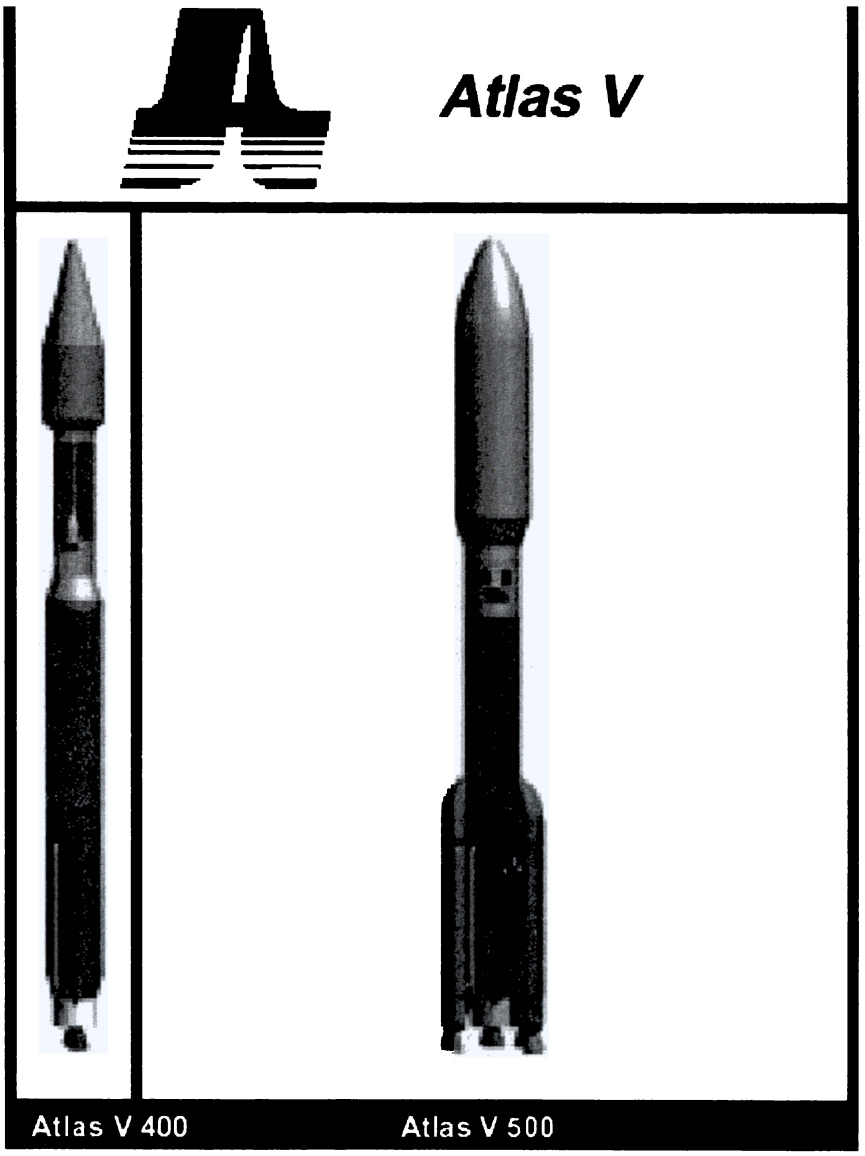

Figure 11-1. Atlas V Family (Atlas V Addendum, 1999)

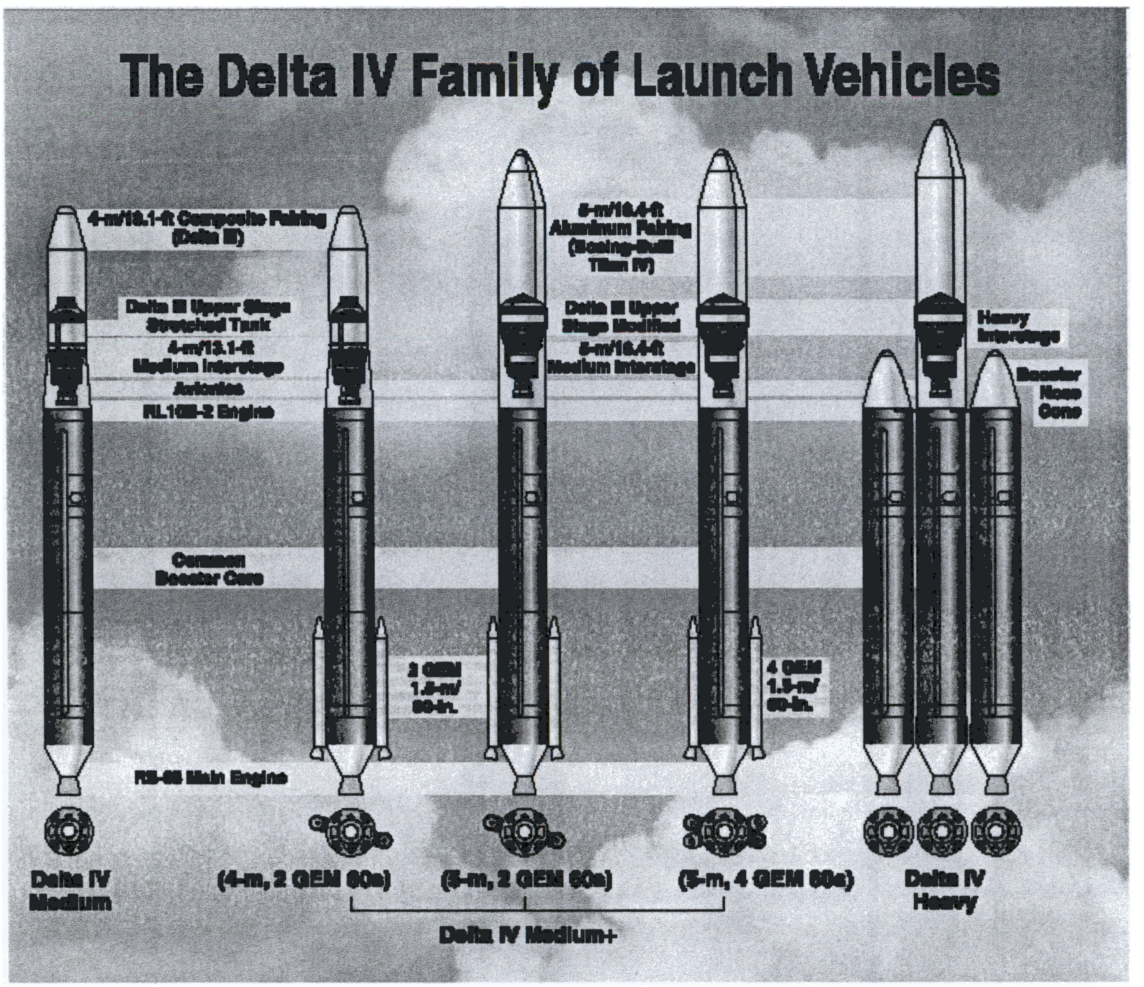

Figure 11-2. Delta IV Family (Delta IV Payload Planner's Guide, 2000)

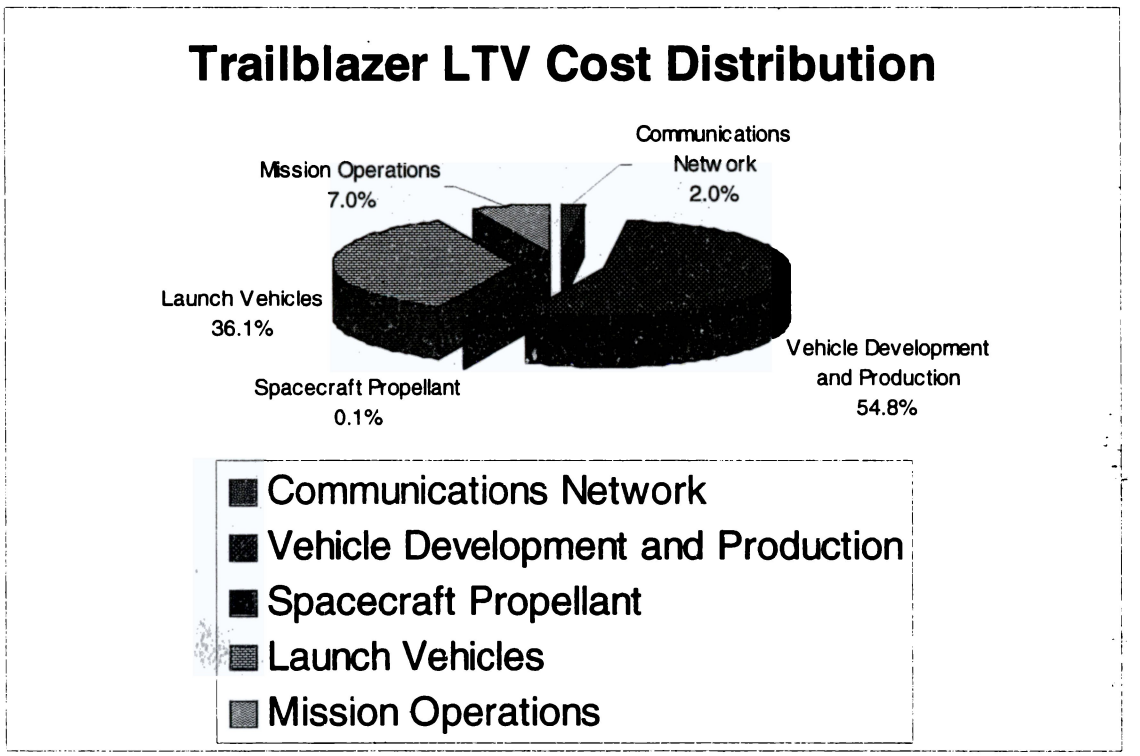

Figure 11-3. Trailblazer LTV Program Cost Distribution

Vita

Robert Lee Howard, Jr. was born in Xenia, OH on August 3, 1971. He was raised primarily in Greensboro, NC and went to grade school at Vandalia Elementary, Price Traditional School, and Allenwood Elementary School. He attended middle school at Taney Middle School (renamed Thurgood Marshall Middle School) and Allen Junior High School. He graduated from James B. Dudley High School in 1989. From there, he went to Morehouse College and received a Bachelor of Science in General Science in 1995 and a Bachelor of Aerospace Engineering from the Georgia Institute of Technology also in 1995. He then went to North Carolina Agricultural and Technical State University and received a Master of Science in Industrial Engineering with a focus in Human Factors in 1998.

Robert is currently pursuing his doctorate in aerospace engineering at the University of Tennessee Space Institute. He has accepted a job offer as a Motion Control Systems flight controller in International Space Station Mission Control at NASA – Johnson Space Center.

8773 5979 47
03/05/03 MAB