View metadata, citation and similar papers at core.ac.uk

brought to you by CORE

provided by Hal-Diderot

Quantum Repeaters based on Single Trapped Ions

Nicolas Sangouard, Romain Dubessy, Christoph Simon

To cite this version:

Nicolas Sangouard, Romain Dubessy, Christoph Simon. Quantum Repeaters based on Single Trapped Ions. Physical Review A, American Physical Society, 2009, 79 (4), pp.042340. <10.1103/PhysRevA.79.042340>. <hal-00362423v2>

HAL Id: hal-00362423

https://hal.archives-ouvertes.fr/hal-00362423v2

Submitted on 25 Mar 2009

HAL is a multi-disciplinary open access archive for the deposit and dissemination of scientific research documents, whether they are published or not. The documents may come from teaching and research institutions in France or abroad, or from public or private research centers.

L'archive ouverte pluridisciplinaire **HAL**, est destinée au dépôt et à la diffusion de documents scientifiques de niveau recherche, publiés ou non, émanant des établissements d'enseignement et de recherche français ou étrangers, des laboratoires publics ou privés.

Quantum Repeaters based on Single Trapped Ions

Nicolas Sangouard[1], Romain Dubessy[1], and Christoph Simon[2]
[1] *Laboratoire Matériaux et Phénomènes Quantiques CNRS, UMR7162, Université Paris Diderot, France*
[2] *Group of Applied Physics, University of Geneva, Switzerland*
(Dated: March 25, 2009)

We analyze the performance of a quantum repeater protocol based on single trapped ions. At each node, single trapped ions embedded into high finesse cavities emit single photons whose polarization is entangled with the ion state. A specific detection of two photons at a central station located half-way between two nodes heralds the entanglement of two remote ions. Entanglement can be extended to long distances by applying successive entanglement swapping operations based on two-ion gate operations that have already been demonstrated experimentally with high precision. Our calculation shows that the distribution rate of entanglement achievable with such an ion-based quantum repeater protocol is higher by orders of magnitude than the rates that are achievable with the best known schemes based on atomic ensemble memories and linear optics. The main reason is that for trapped ions the entanglement swapping operations are performed deterministically, in contrast to success probabilities below 50 percent per swapping with linear optics. The scheme requires efficient collection of the emitted photons, which can be achieved with cavities, and efficient conversion of their wavelength, which can be done via stimulated parametric down-conversion. We also suggest how to realize temporal multiplexing, which offers additional significant speed-ups in entanglement distribution, with trapped ions.

PACS numbers: 03.67.Hk, 03.67.Mn

I. INTRODUCTION

The distribution of entanglement over long distances is difficult because of unavoidable transmission losses and the no-cloning theorem for quantum states. One possible solution is the use of quantum repeaters [1], which are based on the heralded creation and storage of entanglement for elementary links of moderate length, followed by entanglement swapping operations that allow one to extend the distance of entanglement.

The most widely known approach to quantum repeaters combines quantum memories based on atomic ensembles and entanglement swapping operations using linear optics. Building on the initial proposal of Ref. [2], there has been a large amount of experimental [3] and theoretical [4, 5, 6] work towards realizing long-distance entanglement distribution in this way. This approach is attractive because it uses relatively simple elements. However, as quantum technology progresses, it is natural to also consider other possible physical systems. For example, there have been recent proposals for the realization of quantum repeaters with NV centers in diamond [7] and with spins in quantum dots [8, 9].

Trapped ions were one of the first systems to be proposed for quantum computation [10]. Since then, many experiments have been realized that demonstrated key ingredients for quantum computing, including the realization of quantum logic gates with increasing precision [11, 12, 13, 14], the creation of multi-qubit entanglement [15, 16, 17], the implementation of the Deutsch-Jozsa algorithm [18], the realization of entanglement purification [19, 20], the accomplishment of atomic-qubit quantum teleportation [21, 22], the realization of deterministic entanglement swapping [23] as well as the demonstration of very high-efficiency detections with [24] and without [25] ancilla qubit. In addition, ion-photon entanglement has been created [26] and subsequently used to entangle distant ions [27].

Motivated by this impressive body of work, we here analyze in detail the achievable performance of quantum repeaters based on trapped ions. We show that the distribution rates of entanglement offered by repeaters based on single ions are significantly superior compared to the ones achieved with atomic ensemble based schemes. The main reason is that entanglement swapping operations can be performed deterministically for trapped ions. In contrast, the success probability for entanglement swapping is bounded by 1/2 for schemes using Bell measurements based on linear optics [28].

The repeater protocol that we envision requires both an efficient collection of the emitted photons and an efficient conversion of their wavelength to the telecom wavelength around 1.5 μm where the losses in optical fibers are at their minimum. In order to improve the collection of photons emitted by a single ion, one can couple this ion to a high-finesse cavity. Individual ions have been coupled to high-finesse cavities experimentally [29, 30] and theoretical proposals [41] have been realized to make very efficient the photon emission probability into the cavity mode using realistic cavity parameters, cf. below. The frequency conversion might be realized using stimulated parametric down-conversion. This is in fact, the inverse process of the coherent up-conversion that was demonstrated for single photons in Ref. [31], cf. below.

The performance of atomic ensemble based quantum repeaters can be greatly enhanced by temporal multiplexing [32] using multi-mode memories [33]. We will suggest how to implement analogous temporal multiplexing for trapped ions using ion transport methods that have been

developed in the context of quantum computing.

This paper is organized as follows. In the next section, we present the achievable distribution rates for a repeater protocol based on single trapped ions and we compare them to the ones achievable with atomic ensembles. The third section is devoted to implementation issues. In the fourth section we present an approach to implement temporal multiplexing. The fifth section contains our conclusions.

II. EFFICIENCY OF REPEATERS WITH TRAPPED IONS

Let us recall how two remote ions at locations A and B can be entangled via the detection of two photons as proposed in [34, 35, 36]. Note that two remote ions can also be entangled based on the single-photon detection [37]. For a discussion of the advantages and disadvantages of schemes based on two-photon detections versus schemes based on single-photon detections, see e.g. Refs. [6, 38]. Each ion is described by a lambda system of three states, as shown in Fig. 1. From the excited state $|e^A\rangle$ ($|e^B\rangle$) the ion located at A (B) can decay into two degenerate metastable states, say the states $|g_V^A\rangle$ and $|g_H^A\rangle$ ($|g_V^B\rangle$ and $|g_H^B\rangle$) by emitting a photon with a well defined polarization, say either vertical corresponding to the mode a_V or horizontal corresponding to a_H (b_V and b_H respectively). The A and B ions are both excited simultaneously, such that the emission of a photon by each ion leads to the state

$$|\Psi^A\rangle \otimes |\Psi^B\rangle = \frac{1}{2}\left(|g_H^A\rangle a_H^\dagger + |g_V^A\rangle a_V^\dagger\right) \otimes \left(|g_H^B\rangle b_H^\dagger + |g_V^B\rangle b_V^\dagger\right)|0\rangle \quad (1)$$

with $|0\rangle$ the vacuum state. A probabilistic Bell state analysis can be performed by combining the two emitted photons on a polarizing beam spitter (PBS) at a central station located half-way between A and B and by counting the photon number in each output modes $d_\pm = \frac{1}{\sqrt{2}}(a_H \pm b_V)$, $\tilde{d}_\pm = \frac{1}{\sqrt{2}}(b_H \pm a_V)$. Such Bell analysis projects non-destructively the two ions into an entangled state. For example, the detection of two photons, one in each modes d_+ $\tilde{d}_+$, leads to the entangled state

$$|\psi_+^{AB}\rangle = \frac{1}{\sqrt{2}}\left(|g_H^A g_H^B\rangle + |g_V^A g_V^B\rangle\right). \quad (2)$$

In the ideal case, the probability for such an event is 1/8. Taking into account the coincidences between d_--$\tilde{d}_+$, d_+-$\tilde{d}_-$ and d_--$\tilde{d}_-$ combined with the appropriate one-qubit operations, the probability to create the state (2) is 1/2. This way of creating entanglement was demonstrated experimentally in Ref. [27]. Note that the photon collection efficiency was quite low in these experiments, which did not have cavities around the ions.

We now calculate the time needed for entanglement

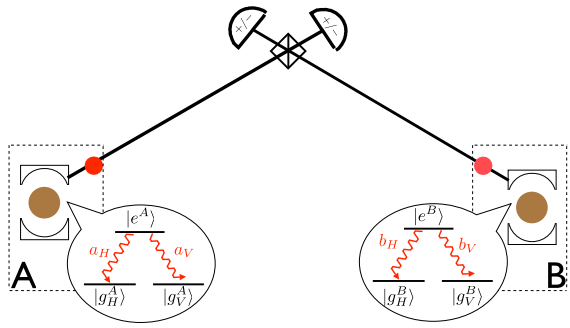

FIG. 1: (Color online) Setup for entanglement creation based on two-photon detection of remote ions (brown dots) embedded into cavities. Each ion emits a photon, whose polarization is entangled with the atomic state, leading to the state $|\Psi^A\rangle \otimes |\Psi^B\rangle$ of Eq. (1). The two photons, one coming from location A, the other one from B are combined on a polarizing beam splitter to be further detected in a polarization basis rotated by 45 degrees with respect to the $H-V$ basis. The coincident detection of two photons in the corresponding modes d_+ and $\tilde{d}_+$, for example, projects the two ions into the entangled state $|\psi_+^{AB}\rangle$ of Eq. (2).

creation. Let us denote by p the success probability for an ion to emit a photon, which includes the probability to prepare the ion in the excited state, the spontaneous emission of a photon into the cavity mode and coupling into the fiber, as well as the frequency conversion to match the telecom wavelength. The probability to get the expected twofold coincidence is thus given by $P_0 = \frac{1}{2}p^2\eta_t^2\eta_d^2$ where $\eta_t = e^{-L_0/(2L_{att})}$ is the fiber transmission with the attenuation length L_{att} (we use $L_{att} = 22$ km, corresponding to losses of 0.2 dB/km, which are currently achievable at a wavelength of 1.5 μm) and η_d is the detection efficiency. Entanglement creation attempts can be repeated at time intervals given by the communication time L_0/c, cf. Ref. [32]. As a consequence, the average time required to entangle two ions separated by a distance L_0, is given by

$$T_{link} = \frac{L_0}{c}\frac{1}{P_0}. \quad (3)$$

Here $c = 2 \times 10^8$ m/s is the photon velocity in the fiber.

The entanglement can further be distributed over longer distances by using successive entanglement swapping operations between elementary links. Such swapping operations require a local Bell state analysis, applied e.g. on the two ions located at B to entangle the ions located at A and C. Bell states have recently been prepared deterministically from the computational basis with a very-high fidelity [14]. Applied on the four Bell states, this protocol transforms each of them into a product state in the computational basis. The measurement of the individual ion states then leads to the desired Bell analysis. The success probability for entanglement swap-

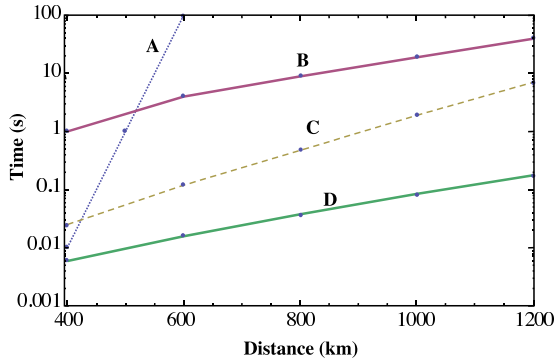

FIG. 2: (Color online) Performance of quantum repeaters based on single ions versus atomic ensembles. The quantity shown is the average time for the distribution of one entangled pair for the given distance. Curve A: as a reference, the time required using direct transmission of photons through optical fibers, with losses of 0.2 dB/km, corresponding to the best available telecom fibers at a wavelength of 1.5 μm, and a pair generation rate of 10 GHz. Curve B: protocol based on atomic ensembles of Ref. [6]. High-fidelity entangled pairs are generated locally, and entanglement generation and swapping operations are based on two-photon detections. We have assumed memory and detector efficiencies of 90%. We imposed a maximum number of 16 links in the repeater chain (see [6] for details). This approach leads to a repeater protocol that, as far as we know, achieves the highest entanglement distribution rate with atomic ensembles and linear optics. Curve C and D: protocol based on single ions with 8 and 16 links respectively. We have assumed a success probability for the ion to emit a photon of $p = 90\%$ requiring high-finesse cavity, cf. text.

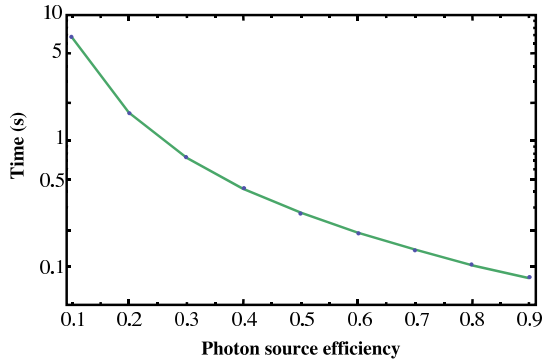

FIG. 3: (Color online) Robustness of a repeater based on single trapped ions with respect to the success probability for an ion to emit a photon p (photon source efficiency) which includes the probability to prepare the ion into the cavity mode and coupling into the fiber, as well as the frequency conversion to match the telecom wavelength. The quantity shown is the average time for the distribution of an entangled pair over 1000km for a repeater with 16 elementary links (Eq. (5)).

ping reduces in this case to the detection efficiency of ions, which is essentially equal to one. The time for the swapping and detection can realistically be much shorter than the time required for entanglement creation (3), cf. below, such that the total time for the distribution of an entangled pair over the distance $2L_0$ is given by

$$T_{2L_0} \approx \frac{3}{2}\frac{L_0}{c}\frac{1}{P_0} = \frac{3L_0}{c}\frac{1}{p^2\eta_t^2\eta_d^2}. \qquad (4)$$

The factor 3/2 arises because entanglement has to be generated for two links before the entanglement connection can be performed. If the average waiting time for entanglement generation for one link is T , there will be a success for one of the two after $T/2$; then one still has to wait a time T on average for the second one, giving a total of $3T/2$. This simple argument gives exactly the correct result in the limit of small P_0 [39, 40]. For a quantum repeater with n nesting levels, analogous factors arise at each level. They are no longer exactly equal to 3/2 in the general case because the waiting time distribution for establishing an individual higher-level link is no longer simply exponential, but numerical results show that this remains a good approximation [4, 40]. (Note that the factors certainly all lie between 1 and 2.) The average time for the distribution of an entangled pair over the distance $L = 2^n L_0$ is then approximately given by

$$T_{tot} \approx \left(\frac{3}{2}\right)^n \frac{L_0}{c}\frac{1}{P_0} = \frac{3^n}{2^{n-1}}\frac{L_0}{c}\frac{1}{p^2\eta_t^2\eta_d^2}. \qquad (5)$$

The performance of such a quantum repeater based on single ions is shown in Fig. 2. In the same figure we also show the performance of the best atomic ensemble based protocol known to us [6]. In this approach, one first locally generates high-fidelity entangled pairs of atomic excitations that are stored in nearby ensembles. Then long-distance entanglement is generated and swapped via two-photon detections. As in Ref. [6], we have limited the maximum number of links used to 16 for all protocols, to have link numbers for which it is plausible that entanglement purification may not be necessary. Note however that entanglement purification has already been implemented for trapped ions [19, 20].

Fig. 2 shows that the distribution rate that can be achieved with single ions is higher by orders of magnitude than the one obtained with atomic ensembles. As mentioned before, the most important factor explaining this improvement is that entanglement swapping operations are performed deterministically for the ions, whereas each swapping operation is performed at most with a probability 1/2 using linear optical elements. Another reason is that the state generated locally with atomic ensembles, which should ideally be a state of two maximally entangled atomic excitations, in fact possesses no-excitation and single-excitation components. Even if these unde-

sired components can be reduced by partial memory read-out [6], they still limit the achievable distribution rate of entanglement.

In Fig. 2 we have assumed that the ions are very efficient sources of single photons ($p = 90\%$), in order to keep the assumptions comparable with the ones made for the atomic-ensemble based scheme in Ref. [6], where the memory efficiency was taken to be $\eta_m = 90\%$. However, it should be pointed out that the average time for the distribution of an entangled pair (see Eq. (5)) scales only like $\frac{1}{p^2}$, such that even with $p = 30\%$, one needs less than $T_{tot} = 740$ ms to distribute an entangled pair over 1000 km using 16 links, which is still shorter than the time achievable with atomic ensembles. Fig. 3 gives the average time required to distribute an entangled pair for various values of p. Note that atomic ensemble based schemes are much more sensitive to a reduction in η_m, because it intervenes in every swapping operation.

III. IMPLEMENTATION

To achieve a high efficiency of photon collection, one can embed the ion within a cavity. The spontaneous emission emitted into the cavity mode is enhanced by the Purcell factor

$$F_P = \frac{3\ell\lambda^2}{2\pi^2 V_0}\mathcal{F} \tag{6}$$

with $\mathcal{F}$ the finesse of the cavity, ℓ its length, λ the free-space wavelength and V_0 the mode volume of the cavity (which is of order $\ell^2\lambda$ for a confocal cavity with a waist of order $\sqrt{\ell\lambda}$). The collection efficiency $\frac{F_P-1}{F_P}$ can then be made as large as desired for large enough Purcell factor F_P, which requires a high finesse $\mathcal{F}$ and small mode volume V_0. Note that a Purcell factor of 2 was already achieved experimentally for a trapped ion in a cavity in Ref. [29].

For concreteness, we focus on the realization of the studied repeater protocol with $^{40}Ca^+$ ions (the relevant states are presented in Fig. 4) even if other species should not be excluded. Following the proposal of Ref. [36], one could prepare the ions in one of the $P_{3/2}$ sublevels to serve as excited state $|e\rangle$. For $|g_H\rangle$ and $|g_V\rangle$, one could use two sublevels of $D_{5/2}$ which are coupled to $|e\rangle$ by orthogonally polarized photons at 854 nm. Ideally, the coupling strengths for the transitions $|e\rangle$-$|g_H\rangle$ and $|e\rangle$-$|g_V\rangle$ should be equal and the cavities should be designed such that the two polarizations are equally supported otherwise the probability to create the state (2) is reduced. Note that in principle, if the coupling strengths are not equal, they might be compensated by appropriate cavity couplings. The characteristic lifetime of the sublevels of $D_{5/2}$ is up to 1 s, which is compatible with the average time required for the distribution of an entangled pair for all the distances considered in Fig. 2 for repeaters with 16 links (see curve D). If longer memory times are required, e.g.

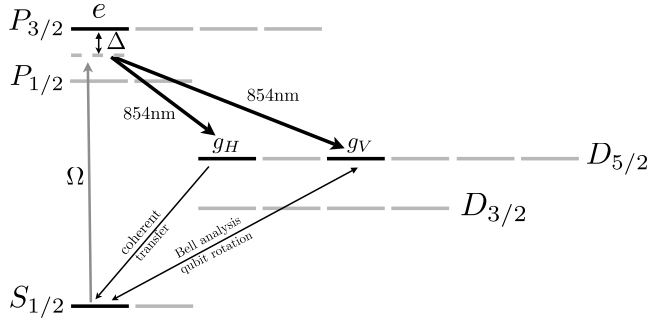

FIG. 4: Relevant levels for $^{40}Ca^+$.

for repeaters with 8 links (see curve C), one could coherently transfer these states to the sublevels associated to $S_{1/2}$, cf. below.

The state $P_{3/2}$ decays preferentially to $S_{1/2}$, which at first sight seems to limit the achievable photon collection efficiency. To overcome this limitation, it has been proposed in Ref. [41] to couple the ground state $S_{1/2}$ directly to sublevels of $D_{5/2}$ through a Raman process by choosing a pump laser far detuned from the $S_{1/2}$-$P_{3/2}$ transition, i.e. $\Delta \gg \Omega$ with Δ the detuning and Ω the pump Rabi frequency. It is shown in Ref. [41] that with this approach one can achieve a photon emission probability into the cavity mode of 95% for a realistic cavity. The achievable photon repetition rate of 20 kHz proposed in Ref. [41] is higher than $\frac{c}{L_0}$ as soon as the elementary links are longer than $L_0 = 15$ km. As a consequence, for the considered distances and link numbers ($L_0 \geqslant 25$ km), the average time for entanglement creation is limited by the communication time, which is in agreement with Eq. (3).

We have assumed that the wavelength of the photons emitted by the ions is converted to a telecom wavelength around 1.5 μm, in order to profit from the optimal transmission of optical fibers in that range. Frequency conversion at the single photon level was already demonstrated in Ref. [31] with an intrinsic efficiency of 56%. In this experiment the frequency of the photons was up-converted in order to achieve a better detection efficiency. However, the inverse process, which is parametric down-conversion with a single-photon pump, but a strong laser stimulating emission into one of the two down-converted modes, can be performed with the same efficiency (due to unitarity). It should be possible to bring the conversion efficiency close to one using stronger non-linearities and a stronger stimulation laser, and of course minimizing all optical and coupling losses. Note that this conversion process preserves entanglement, as was already demonstrated in Ref. [31].

A Bell state analysis is required for the entanglement swapping operations. Following the proposal of Ref. [42], two $^{40}Ca^+$ ions have recently been prepared deterministically in a Bell state (the two qubit states are sublevels

of $S_{1/2}$ and $D_{5/2}$) with a fidelity greater than 99% on a time scale of the order of 50 μs [14]. The two ions are placed close to each other such that they interact through the Coulomb interaction giving rise to a common spatial vibration. A collective irradiation with the appropriate bichromatic field allows one to prepare deterministically the desired Bell state from a given state of the computational basis [42]. Such an experiment could be used to perform the required Bell state analysis in the following manner. The two ions located at each node could be embedded within the same cavity. The distance between them has to be small enough such that they interact efficiently through Coulomb interaction but large enough to allow one an individual addressing of each of them with laser beams. Such an addressing is essential for entanglement creation, i.e. for the targeted emission of a photon by one of the two ions. An optical switch could be used to send the emitted photon to the desired central station. A typical distance of ~ 8 μm separating the two ions [14] with laser beams focused to ~ 2 μm might be well suited. For entanglement swapping, one could first transfer coherently the population of $|g_H\rangle$ to a sublevel of $S_{1/2}$, as in Refs. [43, 44] requiring a time scale of $\sim$10 μs. We then use the appropriate bichromatic field on the transition $S_{1/2}$-$|g_V\rangle$ as in Ref. [14] such that each Bell state will be transformed into a given state of the computational basis. This takes ~ 50 μs. We finally measure the state of each ion independently. This detection could be done by measuring resonance fluorescence from the auxiliary state $P_{1/2}$ that is strongly coupled to $S_{1/2}$ with a laser field at 397 nm and decays back only to that same state [12]. Such measurement has been preformed recently [25] in the same system and it takes in average 145μs with a photon collection of 0.2%. Such characteristic time can realistically be reduced to a few tens of μs by optimizing the collection efficiency [36]. All in all, an entanglement swapping operation should be much shorter than the average time for the entanglement creation ($T_{link} > 1$ ms for $L \geqslant 400$km) justifying the formulas (4)-(5).

To exploit the entanglement, it is essential to be able to detect the states of the ions in different bases (e.g. for a Bell test or for quantum key distribution). The necessary rotations could be performed by first coherently transferring $|g_H\rangle$ to the $S_{1/2}$ sublevels as before and then applying the appropriate pulses on the transition involving that state and $|g_V\rangle$. As said before, these transformations can be performed in ~ 10 μs.

IV. ADDITIONAL SPEED-UP VIA TEMPORAL MULTIPLEXING

As seen before, the creation of entanglement between neighboring nodes A and B is conditioned on the outcome of photon detections at a station located half-way between the nodes. To profit from a nested repeater, the entanglement swapping operations can only be performed once one knows the relevant measurement outcomes. This requires a communication time of order L_0/c. If one can perform a number N of entanglement creation attempts per elementary link within the time interval L_0/c, one can decrease the average time for entanglement creation T_{link} by a factor of order N. Such temporal multiplexing has initially been proposed for quantum repeaters based on atomic ensembles [32], and since then a particularly efficient quantum storage protocol has been developed [33] for this purpose. We here propose a realization of the same basic idea for quantum repeaters based on single ions.

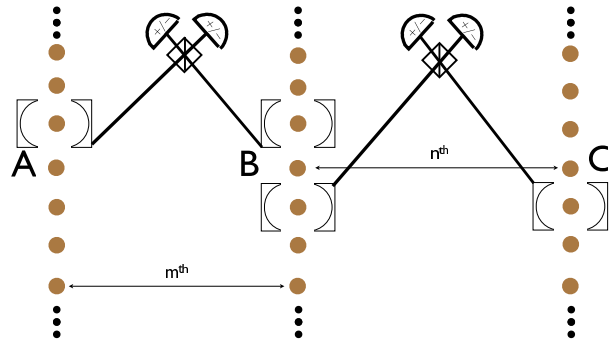

FIG. 5: (Color online) Setup for temporal multiplexing. Chains of ions are transported through cavities such that the ions are excited one by one when they interact with the cavity mode. The ions of the chain B are alternatively excited in the upper cavity for entanglement creation between A and B or in the lower cavity for entanglement creation between B and C. If entanglement has been established between the mth ions for the link A-B and between the nth ions for B-C, entanglement swapping is done by performing a Bell state analysis on the mth and n^{th} ions of the B chain.

Consider two links, say A-B and B-C, allowing one to connect the A and C nodes by entanglement swapping, see Fig. 5. At each location A, B and C a chain of ions within a segmented trap can be moved through a cavity by applying appropriate control electric fields to the various segments [22, 45, 46] such that the internal state of the ions is preserved. Further suppose that the distance between two successive ions is larger than the waist radius of the cavity mode such that one can selectively excite each ion when it interacts with the cavity mode in order to force it to emit a photon.

The ions located at B are used as sources for entanglement creation between both the A-B and B-C links in the following way. Suppose that the chains located at A and C are composed of N ions. The chain B possesses $2N$ ions which are excited alternatively in the upper cavity and in the lower one for entanglement creation between A-B and between B-C locations respectively. If there are two detections behind the central PBS located between A and B for the mth ions for example, then we know that these ions are entangled. Running the same protocol for another pair of ions, there may be similar detections between B and C locations associated to the nth ions. One then performs entanglement swapping by applying the

appropriate operations on the mth and n^{th} ions of the B chain. This can be done by addressing individually the mth and the nth ions with the appropriate bichromatic field [42], thus realizing the Bell state analysis described in the previous section.

Single $^{40}Ca^+$ ions have already been transported from a loading zone to a cavity interaction region separated by more than 20 mm in a characteristic time of 4 ms [30]. This was realized using a segmented trap composed of 5 pairs of electrodes by successively ramping the electrode voltages. Faster transports were realized along $\sim$1 mm with a characteristic time of 50 μs without loss of coherence and with negligible excitation of the ion's motion [22, 45, 46]. The number of attempts that can be achieved per time interval L_0/c is thus likely to be limited by the characteristic time of the Raman process, rather than by the speed of ion transport. For example, the 20 mm long cavity considered in Ref. [41], which is compatible with the characteristics of the trap reported in Ref. [30], gives a photon repetition rate of 20 kHz, which would allow 10 attempts per time interval L_0/c for 1000 km and 8 links. This would increase the entanglement distribution rate by the same factor of 10. For higher repetition rates, one needs to decrease the duration of the Raman process τ, which has to fulfill $\frac{\Omega g}{\Delta}\tau \sim \pi$ to insure an efficient population transfer. This can be done by increasing the g factor, i.e. by decreasing the cavity length l_c. (The ratio Ω/Δ has to be kept smaller than 1 to guarantee that no population will be transferred to the excited state). Considering e.g. a cavity length of $l_c = 6$ mm as described in Ref. [30], the achievable distribution rate increases by a factor 30. If one chooses $l_c = 1$ mm, which might still be compatible with microtrap dimensions [47], one gets an improvement of the rate by a factor of 200.

V. CONCLUSION

We have shown that trapped ions are very promising systems for the implementation of quantum repeaters. In fact, the achievable performance for a relatively basic trapped ion quantum repeater protocol greatly exceeds the best atomic ensemble based protocol known to us. This is mostly due to the fact that a deterministic Bell state analysis can be performed for trapped ions using current technology. We have argued that this performance could further be improved very significantly using temporal multiplexing based on ion transport techniques that have been developed with quantum computing applications in mind. The requirements for implementing practically useful quantum repeaters, while technologically challenging, are much more modest than for the realization of fault-tolerant quantum computation. We suggest that this is an interesting intermediate goal that the ion trapping community should keep in mind.

Acknowledgments

We thank T. Coudreau, N. Gisin, L. Guidoni, and D. Lucas for helpful discussions. This work was supported by the EU Integrated Project *Qubit Applications*, the Swiss NCCR *Quantum Photonics* and the French National Research Agency (ANR) project ANR-JC05_61454.

[1] H.-J. Briegel, W. Dür, J.I. Cirac, and P. Zoller, Phys. Rev. Lett. **81**, 5932 (1998).
[2] L.-M. Duan, M.D. Lukin, J.I. Cirac, and P. Zoller, Nature **414**, 413 (2001).
[3] See for example C.-W. Chou *et al.*, Science **316**, 1316 (2007); Z.-S. Yuan *et al.*, Nature **454**, 1098 (2008).
[4] L. Jiang, J.M. Taylor, and M.D. Lukin, Phys. Rev. A **76**, 012301 (2007).
[5] Z.-B. Chen *et al.*, Phys. Rev. A **76**, 022329 (2007) ; N. Sangouard *et al.*, Phys. Rev. A **76**, 050301(R) (2007) ; B. Zhao *et al.*, Phys. Rev. Lett. **98**, 240502 (2007).
[6] N. Sangouard *et al.*, Phys. Rev. A **77**, 062301 (2008).
[7] L. Childress, J.M. Taylor, A.S. Sørensen, and M.D. Lukin, Phys. Rev. Lett. **96**, 070504 (2006).
[8] C. Simon *et al.*, Phys. Rev. B **75**, 081302(R) (2007).
[9] P. Van Loock, N. Lütkenhaus, W.J. Munro, and K. Nemoto, arXiv:0806.1153
[10] J.I. Cirac and P. Zoller, Phys. Rev. Lett. **74**, 4091 (1995).
[11] C. Monroe, D.M. Meekhof, B.E. King, W.M. Itano, and D.J. Wineland, Phys. Rev. Lett. **75**, 4714 (1995).
[12] F. Schmidt-Kaler *et al.*, Nature (London) **422**, 408 (2003).
[13] D. Leibfried *et al.*, Nature (London) **422**, 412 (2003) ; J.P. Home *et al.*, New J. Phys. **8**, 188 (2006).
[14] J. Benhelm, G. Kirchmair, C.F. Roos, and R. Blatt, Nature Phys. **4**, 463 (2008).
[15] Q.A. Turchette *et al.*, Phys. Rev. Lett. **81**, 3631 (1998).
[16] C.F. Roos *et al.*, Science **304**, 1478 (2004).
[17] D. Leibfried *et al.*, Nature (London) **438**, 639 (2005).
[18] S. Gulde *et al.*, Nature (London) **421**, 48 (2003).
[19] J. Chiaverini *et al.* Nature (London) **432**, 602 (2004).
[20] R. Reichle *et al.*, Nature (London) **443**, 838 (2006).
[21] M. Riebe *et al.*, Nature **429**, 747 (2004).
[22] M.D. Barrett *et al.*, Nature **429**, 737 (2004).
[23] M. Riebe *et al.*, Nature Phys. **4**, 839 (2008).
[24] D.B. Hume, T. Rosenband and D.J. Wineland, Phys. Rev. Lett. **99**, 120502 (2007).
[25] A.H. Myerson *et al.*, Phys. Rev. Lett. **100**, 200502 (2008).
[26] B.B. Blinov, D.L. Moehring, L.-M. Duan, and C. Monroe, Nature **428**, 153 (2004).
[27] D.L. Moehring *et al.*, Nature **449**, 68 (2007); see also D.N. Matsukevich, P. Maunz, D.L. Moehring, S. Olmschenk, and C. Monroe, Phys. Rev. Lett. **100**, 150404 (2008).
[28] J. Calsamiglia and N. Lütkenhaus, Appl. Phys. B **72**, 67 (2001).

[29] A.B. Mundt *et al.*, Phys. Rev. Lett. **89**, 103001 (2002).
[30] M. Keller, B. Lange, K. Hayasaka, W. Lange, and H. Walther, J. Phys. B: At. Mol. Opt. Phys. **36**, 613 (2003).
[31] S. Tanzilli *et al.*, Nature (London) **437**, 116 (2005).
[32] C. Simon *et al.*, Phys. Rev. Lett. **98**, 190503 (2007).
[33] M. Afzelius, C. Simon, H. de Riedmatten, and N. Gisin, arXiv:0805.4164 ; H. de Riedmatten *et al.*, Nature **456**, 773 (2008).
[34] X.-L. Feng *et al.*, Phys. Rev. Lett. **90**, 217902 (2003).
[35] L.-M. Duan and H.J. Kimble, Phys. Rev. Lett. **90**, 253601 (2003).
[36] C. Simon and W.T.M. Irvine, Phys. Rev. Lett., **91**, 110405 (2003).
[37] C. Cabrillo, J.I. Cirac, P. Garcia-Fernanadez, and P. Zoller, Phys. Rev. A **59**, 1025 (1999) ; S. Bose, P.L. Knight, M.B. Plenio, and V. Vedral, Phys. rev. Lett. **83**, 5158 (1999).
[38] S. Zippilli *et al.*, New J. of Phys. **10**, 103003 (2008).
[39] O.A. Collins, S.D. Jenkins, A. Kuzmich, and T.A.B. Kennedy, Phys. Rev. Lett. **98**, 060502 (2007).
[40] J.B. Brask and A.S. Sørensen, Phys. Rev. A **78**, 012350 (2008).
[41] C. Maurer, C. Becher, C. Russo, J. Eschner, and R. Blatt, New J. Phys. **6**, 94 (2004).
[42] A. Sørensen and K. Mølmer, Phys. Rev. Lett. **82**, 1971 (1999).
[43] F. Schmidt-Kaler *et al.*, J. Phys. B **36**, 623 (2003).
[44] Ch. Roos *et al.*, Phys. Rev. Lett. **83**, 4713 (1999).
[45] M.A. Rowe *et al.*, Quantum Information and Computation **2**, 257 (2002).
[46] G. Huber *et al.*, New J. Phys. **10**, 013004 (2008).
[47] Q. A. Turchette *et al.*, Phys. Rev. A **61**, 063418 (2000); R. G. DeVoe, Phys. Rev. A **58**, 910 (1998).