Online Research @ Cardiff

This is an Open Access document downloaded from ORCA, Cardiff University's institutional repository: https://orca.cardiff.ac.uk/id/eprint/131427/

This is the author's version of a work that was submitted to / accepted for publication.

Citation for final published version:

Ayyer, Arvind, Behrend, Roger E. ORCID: https://orcid.org/0000-0002-6143-7439 and Fischer, Ilse 2020. Extreme diagonally and antidiagonally symmetric alternating sign matrices of odd order. Advances in Mathematics 367 , 107125. 10.1016/j.aim.2020.107125 file

Publishers page: http://dx.doi.org/10.1016/j.aim.2020.107125 <http://dx.doi.org/10.1016/j.aim.2020.107125>

Please note:
Changes made as a result of publishing processes such as copy-editing, formatting and page numbers may not be reflected in this version. For the definitive version of this publication, please refer to the published source. You are advised to consult the publisher's version if you wish to cite this paper.

This version is being made available in accordance with publisher policies. See http://orca.cf.ac.uk/policies.html for usage policies. Copyright and moral rights for publications made available in ORCA are retained by the copyright holders.

information services
gwasanaethau gwybodaeth

EXTREME DIAGONALLY AND ANTIDIAGONALLY SYMMETRIC ALTERNATING SIGN MATRICES OF ODD ORDER

ARVIND AYYER, ROGER E. BEHREND, AND ILSE FISCHER

Abstract. For each $\alpha \in \{0, 1, -1\}$, we count diagonally and antidiagonally symmetric alternating sign matrices (DASASMs) of fixed odd order with a maximal number of α's along the diagonal and the antidiagonal, as well as DASASMs of fixed odd order with a minimal number of 0's along the diagonal and the antidiagonal. In these enumerations, we encounter product formulas that have previously appeared in plane partition or alternating sign matrix counting, namely for the number of all alternating sign matrices, the number of cyclically symmetric plane partitions in a given box, and the number of vertically and horizontally symmetric ASMs. We also prove several refinements. For instance, in the case of DASASMs with a maximal number of -1's along the diagonal and the antidiagonal, these considerations lead naturally to the definition of alternating sign triangles. These are new objects that are equinumerous with ASMs, and we are able to prove a two parameter refinement of this fact, involving the number of -1's and the inversion number on the ASM side. To prove our results, we extend techniques to deal with triangular six-vertex configurations that have recently successfully been applied to settle Robbins' conjecture on the number of all DASASMs of odd order. Importantly, we use a general solution of the reflection equation to prove the symmetry of the partition function in the spectral parameters. In all of our cases, we derive determinant or Pfaffian formulas for the partition functions, which we then specialize in order to obtain the product formulas for the various classes of extreme odd DASASMs under consideration.

1. Introduction

An *alternating sign matrix* (ASM) is a square matrix with entries 0, 1 or -1 such that along each row and each column the non-zero entries alternate and add up to 1. An example is given next.

$$\begin{pmatrix} 0 & 0 & 1 & 0 & 0 & 0 & 0 \\ 0 & 1 & -1 & 0 & 1 & 0 & 0 \\ 1 & -1 & 0 & 1 & -1 & 1 & 0 \\ 0 & 0 & 1 & -1 & 1 & 0 & 0 \\ 0 & 1 & -1 & 1 & 0 & -1 & 1 \\ 0 & 0 & 1 & 0 & -1 & 1 & 0 \\ 0 & 0 & 0 & 0 & 1 & 0 & 0 \end{pmatrix} \tag{1.1}$$

(The coloring of the entries is explained shortly.) The story of ASMs began in the early 1980's when Mills, Robbins and Rumsey [MRR82, MRR83] defined them in the course of generalizing the determinant and conjectured that the number of $n \times n$ ASMs is given by the following simple product formula.

$$\prod_{i=0}^{n-1} \frac{(3i+1)!}{(n+i)!} \tag{1.2}$$

2000 *Mathematics Subject Classification.* 05A05, 05A15, 05A19, 15B35, 82B20, 82B23.

Key words and phrases. alternating sign matrices, symmetry classes of ASMs, triangular six-vertex configurations, reflection equation.

It was more than ten years later when Zeilberger [Zei96a] finally succeeded in providing the first proof of this formula in an 84 page paper. Kuperberg [Kup96] then used six-vertex model techniques to give a shorter proof.

As early as the 1980's, as discussed by Robbins [Rob91, Rob00, p.18, p. 2], Stanley suggested systematically studying *symmetry classes of* ASM*s*, which led Robbins to numerous conjectures, see [Rob00]. In particular, several symmetry classes of ASMs were conjectured to be enumerated by beautiful product formulas similar to (1.2). The program of proving these product formulas was recently completed in [BFK17], in which ASMs of odd order that are invariant under the reflections in the diagonal and in the antidiagonal, usually referred to as *diagonally and antidiagonally symmetric* ASM*s* (DASASMs), were enumerated. The example in (1.1) belongs to this symmetry class. About half of Robbins' other conjectured product formulas for symmetry classes of ASMs were proven by Kuperberg in [Kup02], namely those for *vertically symmetric* ASM*s*, *half-turn symmetric* ASM*s* of even order and *quarter-turn symmetric* ASM*s* of even order. Razumov and Stroganov proved the odd order cases for half-turn symmetric ASMs [RS06a] and for quarter-turn symmetric ASMs [RS06b], and Okada enumerated *vertically and horizontally symmetric* ASM*s* [Oka06].

In addition to symmetry classes of ASMs, various closely-related classes of ASMs have also been studied. Of relevance for this paper are *off-diagonally symmetric* ASM*s* (OSASMs), and *off-diagonally and off-antidiagonally symmetric* ASM*s* (OOSASMs), as introduced by Kuperberg [Kup02]. OSASMs are even order diagonally symmetric ASMs in which each entry on the diagonal is 0, while OOSASMs are DASASMs of order $4n$ in which each entry on the diagonal and antidiagonal is 0. A product formula for the number of OSASMs (which is identical to that for odd order vertically symmetric ASMs) was obtained by Kuperberg [Kup02], but no formula for the enumeration of OOSASMs is currently known. For further information regarding symmetry classes and related classes of ASMs, see, for example, [BFK17, Secs. 1.2–1.3], and references therein.

The focus of the current paper is the study of odd order DASASMs with a certain extreme behavior along the union of the diagonal and the antidiagonal. Observe that a DASASM $(a_{i,j})_{1\le i,j\le 2n+1}$ of order $2n+1$ is determined by its entries in the *fundamental triangle* $\{(i,j)|1\le i\le n+1, i\le j\le 2n+2-i\}$—in the example (1.1) marked with red. For a given odd-order DASASM A and $\alpha\in\{0,1,-1\}$, let

$$\mathrm{N}_\alpha(A) = \#\text{ of } \alpha\text{'s along the portions of the diagonals of } A \text{ that lie in the fundamental triangle,}$$

where here and in the following "diagonals" refers to the union of the (main) diagonal and the (main) antidiagonal. In the example (1.1), $\mathrm{N}_{-1}(A)=2$, $\mathrm{N}_1(A)=1$ and $\mathrm{N}_0(A)=4$. We have the following bounds for these statistics. (The proof of the proposition is provided in Subsection 2.2.)

Proposition 1.1. *For any* $(2n+1)\times(2n+1)$ DASASM A*, the statistics* $\mathrm{N}_\alpha(A)$ *lie in the following intervals.*

(1) $0\le \mathrm{N}_{-1}(A)\le n$
(2) $0\le \mathrm{N}_1(A)\le n+1$
(3) $n\le \mathrm{N}_0(A)\le 2n$

All inequalities are sharp.

The research presented in this paper started out with numerical data providing evidence that for four out of the six inequalities in the proposition we have the following phenomenon: The number of DASASMs where equality is attained is round and in fact equal to numbers that have previously appeared in plane partition or alternating sign matrix counting. (For the two other inequalities, the numbers are not even round.) It is the primary objective of this paper to prove all these empirical observations. A number of generalizations including determinant or Pfaffian formulas for certain generating functions that are known as *partition functions* in a physics context are also provided. Next we state the main results.

1.1. **Case $\mathrm{N}_{-1}(A) = n$:** Order $2n+1$ DASASMs A with $\mathrm{N}_{-1}(A) = n$ are proven to be equinumerous with $n \times n$ ASMs. It is remarkable that this now establishes a new class of objects with this property. The two other currently-known classes are *totally symmetric self-complementary plane partitions* in an $2n \times 2n \times 2n$ box (which were introduced by Stanley [Sta86] and enumerated by Andrews [And94], and for which the equinumeracy with ASMs was first conjectured by Mills, Robbins and Rumsey [MRR86]) and *descending plane partitions* (DPPs) with parts no greater than n (which were introduced and enumerated by Andrews [And79], and for which equinumeracy with ASMs was first conjectured by Mills, Robbins and Rumsey [MRR82, MRR83]).

We are also able to identify statistics that have the same distribution: For an ASM A, let

$$\mu(A) = \#\text{ of } -1\text{'s in } A,$$

and, for an order $2n+1$ DASASM A, let

$$\mu_\nabla(A) = (\#\text{ of } -1\text{'s in the fundamental triangle of } A) - n.$$

We will consider $\mu_\nabla(A)$ only for $A \in \mathrm{DASASM}(2n+1)$ with $\mathrm{N}_{-1}(A) = n$, in which case it is just the number of -1's in the interior of the fundamental triangle. Throughout the paper, the sets of order n ASMs and order n DASASMs are denoted by $\mathrm{ASM}(n)$ and $\mathrm{DASASM}(n)$, respectively.

Theorem 1.2. *The distribution of the statistic μ on the set $\mathrm{ASM}(n)$ is equal to the distribution of the statistic μ_∇ on the set of $A \in \mathrm{DASASM}(2n+1)$ with $\mathrm{N}_{-1}(A) = n$, i.e., for all non-negative integers m, n we have*

$$|\{A \in \mathrm{ASM}(n) \mid \mu(A) = m\}| = |\{A \in \mathrm{DASASM}(2n+1) \mid \mathrm{N}_{-1}(A) = n,\ \mu_\nabla(A) = m\}|.$$

A corresponding result—with the set of $A \in \mathrm{DASASM}(2n+1)$ such that $\mathrm{N}_{-1}(A) = n$ replaced by the set of DPPs with parts no greater than n and μ_∇ replaced by the number of special parts in the DPP—was conjectured by Mills, Robbins and Rumsey [MRR83] and proven by Behrend, Di Francesco and Zinn-Justin [BDFZJ12]. In fact, they have proven a refinement (also conjectured by Mills, Robbins and Rumsey) that involves two additional statistics. On the ASM side, these are the *inversion number* and the *position of the unique* 1 *in the top row.* (This was further generalized in [BDFZJ13], where they also included the position of the unique 1 in the bottom row.) In Section 5, we define an inversion number inv_∇ on the set of $A \in \mathrm{DASASM}(2n+1)$ with $\mathrm{N}_{-1}(A) = n$ such that the joint distribution of μ and inv on $\mathrm{ASM}(n)$ is equal to the joint distribution of μ_∇ and inv_∇ on this subset of $\mathrm{DASASM}(2n+1)$ (Theorem 5.5), thus establishing a refinement of Theorem 1.2. Other generalizations of Theorem 1.2 in terms of partition functions for certain triangular six-vertex configurations are provided in Theorems 5.1 and 5.3, and in Corollary 5.2.

1.2. **Case $\mathrm{N}_1(A) = n+1$:** In the second theorem, *cyclically symmetric plane partitions* (CSPPs) make an appearance. They were enumerated by Andrews [And79].

Theorem 1.3. *The number of $A \in \mathrm{DASASM}(2n+1)$ with $\mathrm{N}_1(A) = n+1$ is equal to the number of* CSPP*s in an $n \times n \times n$ box.*

The number of CSPPs has previously appeared in the program of enumerating symmetry classes of ASMs: Robbins conjectured [Rob00] and Kuperberg [Kup02, Theorem 2] proved that the number of $2n \times 2n$ half-turn symmetric alternating sign matrices is the product of the total number of $n \times n$ ASMs and the number of CSPPs in an $n \times n \times n$ box.

Generalizations of Theorem 1.3 in terms of partition functions are provided in Theorems 6.1 and 6.3, and in Corollary 6.2.

1.3. **Case** $\mathrm{N}_0(A) = n$**:** For the lower bound of N_0, we again have the total number of ASMs turning up. This is one of the few exceptional cases in this field that can easily be proven by establishing a bijection with other objects that are known to be enumerated by these numbers, in this particular case with $A \in \mathrm{DASASM}(2n+3)$ satisfying $\mathrm{N}_{-1}(A) = n+1$ (which also appear in Theorem 1.2 and are shown to be equinumerous with ASMs of order $n+1$). This bijection is provided in Subsection 2.4. As it is always the situation in such a case in this area so far, the bijection is almost trivial, which is the reason why the following result can be viewed as a corollary of Theorem 1.2.

Corollary 1.4. *The number of* $A \in \mathrm{DASASM}(2n+1)$ *with* $\mathrm{N}_0(A) = n$ *is equal to the number of* ASM*s of order* $n+1$.

1.4. **Case** $\mathrm{N}_0(A) = 2n$**:** In the case of the upper bound of N_0, the number of *vertically and horizontally symmetric alternating sign matrices* (VHSASMs) appears.

Theorem 1.5. *The number of* $A \in \mathrm{DASASM}(2n+1)$ *with* $\mathrm{N}_0(A) = 2n$ *is equal to the number of order* $2n+3$ VHSASM*s.*

The DASASMs A of order $2n+1$ with $\mathrm{N}_0(A) = 2n$ can be regarded as odd order versions of OOSASMs, and so we denote this subset of $\mathrm{DASASM}(2n+1)$ by $\mathrm{OOSASM}(2n+1)$. Indeed, as the central entry of an odd order DASASM is always non-zero, all other entries on the diagonals of such a DASASM are zero and thus this is for odd order as close as one can get to Kuperberg's original OOSASMs.[1] Interestingly, vertically symmetric OOSASMs of odd order have been enumerated by Okada [Oka06, (B2) and (B3) of Theorem 1.3]. (There they are referred to as VOSASMs, since the vertical symmetry and the diagonal symmetry implies the antidiagonal symmetry.)

Generalizations of Theorem 1.5 in terms of partition functions are provided in Theorems 7.1 and 7.2.

1.5. **Outline of the paper.** In Section 2, we provide several basic observations: We prove Proposition 1.1, and, already for this purpose, it is useful to translate our problems into the counting of certain orientations of triangular regions of the square grid (*triangular six-vertex configurations*). In this section, we also present a simple bijection between the order n DASASM objects of Theorem 1.2 and the order $n-1$ DASASM objects of Corollary 1.4 that consists merely of manipulations close to the diagonal and the antidiagonal. In Section 3, we introduce the vertex weights and some of their properties (*Yang–Baxter equation*, *reflection equations*), and use these weights to define the *partition function*, i.e., a multiparameter generating function of the objects we want to count. There we also introduce several specializations of this partition function that are used to prove our theorems. The partition function is a Laurent polynomial in the so-called *spectral parameters*, and, in Section 4, we provide characterizations of this partition function that are used later on. In Sections 5 – 7, we then employ all these preparations to prove Theorems 1.2, 1.3 and 1.5, respectively. Finally, in Appendix A we provide an ad-hoc counting of alternating sign triangles with a single -1.

[1] Note that the central entry c of an $A \in \mathrm{OOSASM}(2n+1)$ is $(-1)^n$: The sum of entries in A is certainly $2n+1$, however it is also $4s+c$, where s is the sum of entries in the fundamental domain of A without c.

2. Basics: Proof of Proposition 1.1, characterization of extreme configurations and Theorem 1.2 implies Corollary 1.4

2.1. **Triangular six-vertex configurations.** Let $A = (a_{i,j})_{1\le i,j\le 2n+1}$ be a DASASM of order $2n+1$. Its restriction to the fundamental triangle $(a_{i,j})_{1\le i\le n+1, i\le j\le 2n+2-i}$ is said to be an *odd* DASASM-*triangle* of order n. An example of an odd DASASM-triangle of order 6 is given next.

$$\begin{array}{ccccccccccccc}
0 & 0 & 0 & 1 & 0 & 0 & 0 & 0 & 0 & 0 & 0 & 0 & 0 \\
 & 1 & 0 & -1 & 0 & 0 & 0 & 1 & 0 & 0 & 0 & 0 & \\
 & & 0 & 1 & 0 & 0 & 0 & -1 & 0 & 1 & 0 & & \\
 & & & -1 & 1 & 0 & 0 & 0 & 0 & -1 & & & \\
 & & & & -1 & 1 & 0 & 0 & 0 & & & & \\
 & & & & & -1 & 0 & 1 & & & & & \\
 & & & & & & 1 & & & & & &
\end{array} \tag{2.1}$$

In fact, a triangular array $(a_{i,j})_{1\le i\le n+1, i\le j\le 2n+2-i}$ of this form, in which each entry is 0, 1 or -1, is an odd DASASM-triangle of order n if and only if, for each $j \in \{1, 2, \dots, n+1\}$, the non-zero entries in the following sequence alternate—read from top left to the top right—and add up to 1.

$$\begin{array}{ccccccc}
 & a_{1,j} & & & & a_{1,2n+2-j} & \\
 & a_{2,j} & & & & a_{2,2n+2-j} & \\
\downarrow & \vdots & & & & \vdots & \uparrow \\
 & a_{j-1,j} & & & & a_{j-1,2n+2-j} & \\
 & a_{j,j} & a_{j,j+1} & \cdots & a_{j,2n+1-j} & a_{j,2n+2-j} & \\
 & & & \rightarrow & & &
\end{array} \tag{2.2}$$

(In the example (2.1), this sequence is indicated in red for $j = 4$.) Let us clarify that in the special case $j = n+1$, we require that the sequence

$$a_{1,n+1}, a_{2,n+1}, \dots, a_{n,n+1}, a_{n+1,n+1}, a_{n,n+1}, \dots, a_{1,n+1}$$

has this property, and this is satisfied if and only if the non-zero entries of $a_{1,n+1}, a_{2,n+1}, \dots, a_{n+1,n+1}$ alternate, the first non-zero entry in this sequence is 1, and $a_{n+1,n+1} \neq 0$. For an odd DASASM-triangle A, we define $\mathrm{N}_\alpha(A) = \mathrm{N}_\alpha(A')$, where A' is the DASASM corresponding to A.

In the *six-vertex model*, these triangular arrays correspond to orientations of a triangular region of the square grid with $n+2$ centered rows as indicated in Figure 1, where

- the degree 4 vertices (*bulk vertices*) have two incoming and two outgoing edges, and
- the top vertical edges point up.

Rows $2, 3, \dots, n+2$ in the grid will correspond to rows $1, 2, \dots, n+1$ of the DASASM-triangle, respectively. The term *six-vertex* is derived from the fact that there are $\binom{4}{2} = 6$ possible local configurations around a bulk vertex. The underlying undirected graph is denoted by $\mathcal{T}_n$ in the following.

The triangular six-vertex configuration of an odd DASASM-triangle can be obtained by restricting the standard six-vertex configuration on a square of the respective DASASM to the fundamental triangle. More concretely, each vertex of $\mathcal{T}_n$, except for the degree 1 vertices at the top, corresponds to an entry of the associated odd DASASM-triangle of order n. As usual, a bulk vertex whose two incident vertical edges are outgoing ( ), respectively incoming ( ), corresponds to a 1, respectively -1, in the odd DASASM-triangle, while all other bulk vertices correspond to zeros. *Left boundary vertices* and *right boundary vertices* are the degree 2 vertices on the left and right boundary, and such a vertex corresponds to a 1 (resp. -1) if and only if the local configuration around the vertex is the restriction of the local bulk configuration corresponding to a 1 (resp. -1). This also applies to the

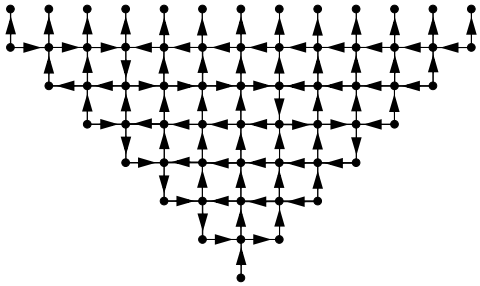

FIGURE 1. Triangular six-vertex configuration of order 6

bottom vertex. That is,

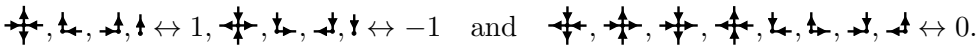

The configuration in Figure 1 is the six-vertex configuration of the odd DASASM-triangle in (2.1). Note that when restricting the six-vertex configuration of an odd DASASM to the fundamental triangle, the local configuration on the left-boundary must originate from , and thus corresponds to 1, because the only other local configuration with this restriction, i.e., , cannot appear on the diagonal of a six-vertex configuration of a DASASM. We have a similar situation for , , .

2.2. **Proof of Proposition 1.1.** In order to derive the crucial identity (2.3), we employ the fact that, in a directed graph, the sum of all outdegrees is equal to the sum of all indegrees. The bulk vertices of a triangular six-vertex configuration as well as the vertices on the left and right boundary that correspond to ± 1's are balanced in the sense that the outdegree is equal to the indegree, and so these vertices do not contribute to this identity.

For an odd DASASM-triangle A, we denote the number of boundary zeros with indegree 2 in the corresponding triangular six-vertex configuration by $\mathrm{N}_{0,\mathrm{in}}(A)$, and number of boundary zeros with outdegree 2 by $\mathrm{N}_{0,\mathrm{out}}(A)$. In the example in Figure 1, we have $\mathrm{N}_{0,\mathrm{in}}(A) = 0$ and $\mathrm{N}_{0,\mathrm{out}}(A) = 6$. Now, since all $2n+1$ top vertices have indegree 1, the sum of all outdegrees is $2\,\mathrm{N}_{0,\mathrm{out}}(A) + [a_{n+1,n+1} = 1]$ (where we use the Iverson bracket, i.e., $[\text{statement}] = 1$ if the statement is true, and 0 otherwise), while the sum of all indegrees is $2\,\mathrm{N}_{0,\mathrm{in}}(A) + 2n + 1 + [a_{n+1,n+1} = -1]$, and, since $[a_{n+1,n+1} = 1] - [a_{n+1,n+1} = -1] = a_{n+1,n+1}$, we can conclude that

$$2\,\mathrm{N}_{0,\mathrm{out}}(A) + a_{n+1,n+1} - (2\,\mathrm{N}_{0,\mathrm{in}}(A) + 2n + 1) = 0. \tag{2.3}$$

The lower bounds for $\mathrm{N}_{\pm 1}(A)$ are trivial and the upper bound for $\mathrm{N}_0(A)$ follows because the central entry of a DASASM is always non-zero.

An example of a DASASM in which the upper bound of N_0 is attained is the matrix where every other entry of the restriction of the superdiagonal (i.e., the secondary diagonal immediately above the main diagonal) to the fundamental triangle is 1, the central entry is $(-1)^n$ and all other entries of the fundamental triangle are 0. The corresponding odd DASASM-triangles of order 4 and 5 are the following:

$$\begin{array}{ccccccccc}
0 & 1 & 0 & 0 & 0 & 0 & 0 & 0 & 0 \\
 & 0 & 0 & 0 & 0 & 0 & 0 & 0 & \\
 & & 0 & 1 & 0 & 0 & 0 & & \\
 & & & 0 & 0 & 0 & & & \\
 & & & & 1 & & & &
\end{array}
\qquad
\begin{array}{ccccccccccc}
0 & 1 & 0 & 0 & 0 & 0 & 0 & 0 & 0 & 0 & 0 \\
 & 0 & 0 & 0 & 0 & 0 & 0 & 0 & 0 & 0 & \\
 & & 0 & 1 & 0 & 0 & 0 & 0 & 0 & & \\
 & & & 0 & 0 & 0 & 0 & 0 & & & \\
 & & & & 0 & 1 & 0 & & & & \\
 & & & & & -1 & & & & &
\end{array}$$

As we will see below that $\mathrm{N}_{-1}(A) = n$ implies $\mathrm{N}_1(A) = 0$, and $\mathrm{N}_1(A) = n+1$ implies $\mathrm{N}_{-1}(A) = 0$, the fact that the two trivial inequalities are sharp follows from the fact that the upper bounds of $\mathrm{N}_{\pm 1}$ are sharp. The latter facts are shown below.

Inequality $\mathrm{N}_{-1}(A) \le n$*:* Using $\mathrm{N}_1(A)+\mathrm{N}_{-1}(A)+\mathrm{N}_{0,\mathrm{out}}(A)+\mathrm{N}_{0,\mathrm{in}}(A) = 2n+1$ and (2.3), we deduce

$$\begin{aligned}\mathrm{N}_{-1}(A) &= 2n+1-\mathrm{N}_1(A)-\mathrm{N}_{0,\mathrm{out}}(A)-\mathrm{N}_{0,\mathrm{in}}(A)\\ &= n+\frac{1}{2}-\mathrm{N}_1(A)-2\,\mathrm{N}_{0,\mathrm{in}}(A)+\frac{a_{n+1,n+1}}{2} \le n.\end{aligned}$$

We have equality iff $\mathrm{N}_{0,\mathrm{in}}(A) = \mathrm{N}_1(A) = 0$ and $a_{n+1,n+1} = -1$, or else $\mathrm{N}_{0,\mathrm{in}}(A) = 0$ and $\mathrm{N}_1(A) = a_{n+1,n+1} = 1$. However, the latter possibility cannot occur since then the bottom bulk vertex in the central column would have three incoming edges—the left (resp. right) boundary vertex adjacent to it is of type or (resp. or)—and this is impossible.

An order $2n+1$ DASASM with $\mathrm{N}_{-1}(A) = n$ is

$$A = \begin{pmatrix} 0 & 1 & 0 & \cdots & \cdots & \cdots & \cdots & 0\\ 1 & -1 & 1 & 0 & & & & \vdots\\ 0 & 1 & -1 & 1 & 0 & & & \vdots\\ 0 & 0 & 1 & -1 & 1 & 0 & & \vdots\\ \vdots & & \ddots & \ddots & \ddots & \ddots & \ddots & \vdots\\ \vdots & & & 0 & 1 & -1 & 1 & 0\\ \vdots & & & & 0 & 1 & -1 & 1\\ 0 & \cdots & \cdots & \cdots & \cdots & 0 & 1 & 0 \end{pmatrix}.$$

Inequality $\mathrm{N}_1(A) \le n+1$*:* Here we have

$$\mathrm{N}_1(A) = n+\frac{1}{2}-\mathrm{N}_{-1}(A)-2\,\mathrm{N}_{0,\mathrm{in}}(A)+\frac{a_{n+1,n+1}}{2} \le n+1,$$

and equality is attained iff $\mathrm{N}_{0,\mathrm{in}}(A) = 0$, $\mathrm{N}_{-1}(A) = 0$ and $a_{n+1,n+1} = 1$. The identity matrix is a matrix where equality is attained.

Inequality $\mathrm{N}_0(A) \ge n$*:* From (2.3), it follows

$$\mathrm{N}_0(A) = \mathrm{N}_{0,\mathrm{out}}(A)+\mathrm{N}_{0,\mathrm{in}}(A) \ge \mathrm{N}_{0,\mathrm{out}}(A)-\mathrm{N}_{0,\mathrm{in}}(A) = n+\frac{1}{2}-\frac{a_{n+1,n+1}}{2} \ge n,$$

and so we have equality iff $\mathrm{N}_{0,\mathrm{in}}(A) = 0$ and $a_{n+1,n+1} = 1$. Since $\mathrm{N}_1(A) = n+1$ implies $\mathrm{N}_0(A) = n$, this inequality is sharp too.

2.3. **Characterization of extreme configurations.** The proof of Proposition 1.1 implies immediately the following characterization.

Corollary 2.1. *Let A be an odd* DASASM*-triangle of order n.*

(1) *We have $\mathrm{N}_{-1}(A) = n$ if and only if, for each row except the bottom row, the sum of entries is 1 when disregarding the left and right boundary entries. In the six-vertex configuration, this is fulfilled if and only if, in each row, the leftmost horizontal edge points to the right and the rightmost horizontal edge points to the left.*

(2) *We have $\mathrm{N}_1(A) = n+1$ if and only if the sum of entries in each row is 1. In the six-vertex configuration, this is fulfilled if and only if, in each row, the leftmost vertical edge and the rightmost vertical edge point upwards.*

(3) *We have $\mathrm{N}_0(A) = n$ if and only if, for each row, one of the following is true.*
   (a) *The sum of entries is 1.*

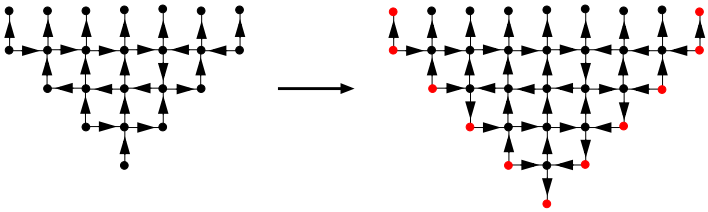

FIGURE 2. Illustration of the proof that Theorem 1.2 implies Corollary 1.4

(b) *The sum of entries with the left or right boundary entry excluded from the sum is* 1.
(c) *The sum of entries with both boundary entries excluded from the sum is* 1.

Remark 2.2. (1) Odd DASASM-triangles A of order n with $\mathrm{N}_{-1}(A) = n$ are precisely the odd DASASM-triangles of order n in which the sum of entries is minimal. Indeed, the characterization in Corollary 2.1 (1) implies the following different characterization: An odd DASASM-triangle A of order n satisfies $\mathrm{N}_{-1}(A) = n$ if and only if each column sum is 0. In order to see this, also recall that the bottom entry of such an A is -1. Now the sum of entries in an odd DASASM-triangle is at least 0 (since each column sum is at least 0), and the minimum is attained if and only if each column sum is 0.

(2) The characterization in Corollary 2.1 (2) implies that odd DASASM-triangles A of order n with $\mathrm{N}_1(A) = n + 1$ are precisely the odd DASASM-triangles of order n in which the sum of entries is maximal. This is because the sum of entries in an odd DASASM-triangle of order n is at most $n + 1$, since each of the $n + 1$ rows has row sum at most 1, and the maximum is attained if and only if each row has sum 1.

2.4. **Theorem 1.2 implies Corollary 1.4.** This is best understood in terms of the six-vertex model. As noted in the proof of Proposition 1.1, the triangular six-vertex configurations equivalent to the objects from Corollary 1.4 are characterized by the two facts that there is no left or right boundary vertex with indegree 2 and the bottom vertical edge points upwards.

To transform an order n configuration of Corollary 1.4 into an order $n + 1$ configuration of Theorem 1.2, add vertices left of each left boundary vertex and connect the new vertices to their right neighbors by an edge that is directed to the right, see Figure 2 for an example. Add similar vertices and edges on the right boundary, where the new horizontal edges are directed to the left.

Also add a new vertex below the bottom central vertex and introduce vertical edges that connect the $2n + 3$ added vertices to their top neighbors (for the two new top boundary vertices add vertices above them and two vertical edges that are directed upwards). Since the indegree of each former boundary vertex was either 0 or 1 (and is currently either 1 or 2) and the former bottom vertex had indegree 0 (and has currently indegree 2), there is a unique way to orient the new vertical edges such that the former boundary and bottom vertices (now bulk vertices) are balanced. By Corollary 2.1, this produces an object with the desired properties.

To reverse the transformation, simply delete left and right boundary vertices of an order $n + 1$ configuration of Theorem 1.2 as well as the bottom vertex, and all edges incident with these vertices. None of the new left or right boundary vertices can have indegree 2, since, before the deletion of the vertices and edges, the leftmost vertical edge in each row was pointing to the right, while the rightmost vertical edge in each row was pointing to the left. This also implies that the bottom bulk vertex in the central column was of type before the deletion, and thus the new bottom vertex points upwards.

2.5. **Alternating sign triangles.** If we delete the diagonals of an odd DASASM-triangle A of order n with $\mathrm{N}_{-1}(A) = n$, then, by Corollary 2.1, we obtain an object of the following type.

Definition 2.1. An *alternating sign triangle* (AST) of order n is a triangular array $(a_{i,j})_{1\le i\le n, i\le j\le 2n-i}$ in which each entry is 0, 1 or -1 and the following conditions are fulfilled.

(1) The non-zero entries alternate in each row and each column.
(2) All row sums are 1.
(3) The topmost non-zero entry of each column is 1 (if it exists).

The set of order n ASTs is denoted by $\mathrm{AST}(n)$.

Here is a list of all ASTs of order 3.

$$\begin{array}{ccccc|ccccc|ccccc|ccccc}
1 & 0 & 0 & 0 & 0 & 0 & 0 & 0 & 1 & 0 & 0 & 0 & 0 & 0 & 1 & 1 & 0 & 0 & 0 & 0 \\
 & 1 & 0 & 0 & & & 1 & 0 & 0 & & & 1 & 0 & 0 & & & 0 & 0 & 1 & \\
 & & 1 & & & & & 1 & & & & & 1 & & & & & 1 & &
\end{array}$$

$$\begin{array}{ccccc|ccccc|ccccc}
0 & 1 & 0 & 0 & 0 & 0 & 0 & 0 & 0 & 1 & 0 & 0 & 1 & 0 & 0 \\
 & 0 & 0 & 1 & & & 0 & 0 & 1 & & & 1 & -1 & 1 & \\
 & & 1 & & & & & 1 & & & & & 1 & &
\end{array}$$

In fact, order n ASTs are in bijection with order $2n+1$ DASASMs with $\mathrm{N}_{-1}(A) = n$ as the diagonals can be reconstructed as follows:

Place a -1 below each column of the AST whose entries add up to 1, and place a 0 otherwise.

The resulting triangle is surely an odd DASASM-triangle A' of order n, as the non-zero entries of all sequences as given in (2.2) are alternating and add up to 1; furthermore, it is the unique way of adding entries in these positions to achieve that. Moreover, we have $\mathrm{N}_{-1}(A') = n$ as an AST has precisely n columns that add up to 1. This is because the total sum of all entries in an order n AST is n (by property (2) in the definition) and each of the $2n-1$ column sums is either 0 or 1 (by properties (1) and (3)).

Theorem 1.2 states that, for all non-negative integers n, m, the number of $n \times n$ ASMs with m occurrences of -1 is equal to the number of ASTs of order n with m occurrences of -1.

For $m = 0$, this is easy to see: ASMs without -1 are permutation matrices. There are also $n!$ ASTs of order n: Each row contains precisely one 1 and we build up the AST by placing in each row a 1, starting with the bottom row. For the 1 in the bottom row, there is one choice, for the 1 in the penultimate row there are in principle 3 possible columns, but one is already taken by the 1 in the bottom row and thus there are 2 actual choices. In general, in the i-th row counted from the bottom, there are $2i-1$ columns, but $i-1$ are already occupied by 1's that are situated in rows below. This leaves us with i possibilities. In total, there are $1 \cdot 2 \cdot 3 \cdots n$ ASTs with n rows and no -1.

In order to give an indication as to why it is probably not easy to construct a bijection between ASMs and ASTs, we elaborate on the $m = 1$ case in Appendix A.

As a further comment that is also related to the previous subsection, observe that in order to transform an odd DASASM-triangle A of order n with $\mathrm{N}_0(A) = n$ into the corresponding AST of order $n+1$, one simply has to replace all -1's along the left and right boundary by 0's.

2.6. **Dual alternating sign triangles and quasi alternating sign triangles.** If we delete the diagonals of an odd DASASM-triangle of order n with $\mathrm{N}_1(A) = n+1$, then, by Corollary 2.1, we obtain triangular arrays of the following type.

Definition 2.2. A *dual alternating sign triangle* (DAST) of order n is a triangular array $(a_{i,j})_{1\le i\le n, i\le j\le 2n-i}$ in which each entry is 0, 1 or -1 and the following conditions are fulfilled.

(1) The non-zero entries alternate in each row and each column.
(2) All column sums are 0.
(3) The topmost non-zero entry of each column is 1 (if it exists).

The set of order n DASTs is denoted by $\mathrm{DAST}(n)$.

Next we display all order 3 DASTs.

$$\begin{array}{ccccc|ccccc|ccccc|ccccc}
0 & 0 & 0 & 0 & 0 & 0 & 1 & 0 & 0 & 0 & 0 & 0 & 0 & 1 & 0 & 0 & 0 & 1 & 0 & 0 \\
 & 0 & 0 & 0 & & & -1 & 0 & 0 & & & 0 & 0 & -1 & & & 0 & -1 & 0 & \\
 & & 0 & & & & & 0 & & & & & 0 & & & & & 0 & & \\
\hline
0 & 0 & 1 & 0 & 0 & 0 & 0 & 0 & 0 & 0 & 0 & 1 & 0 & 0 & 0 & 0 & 0 & 0 & 1 & 0 \\
 & 0 & 0 & 0 & & & 0 & 1 & 0 & & & -1 & 1 & 0 & & & 0 & 1 & -1 & \\
 & & -1 & & & & & -1 & & & & & -1 & & & & & -1 & &
\end{array}$$

It is possible to reconstruct the deleted diagonal entries, except for the rows that contain only zeros (referred to as 0-rows), in the following way:

- Add a 1 below the bottom entry.
- If the leftmost non-zero entry of a row is -1 (resp. 1), place a 1 (resp. 0) left of the leftmost entry of that row.
- If the rightmost non-zero entry of a row is -1 (resp. 1), place a 1 (resp. 0) right of the rightmost entry of that row.
- In the case of 0-rows, there are two choices of placing a 1 on one end and a 0 on the other.

Therefore,

$$|\{A \in \mathrm{DASASM}(2n+1) \mid \mathrm{N}_1(A) = n+1\}| = \sum_{A \in \mathrm{DAST}(n)} 2^{\#\text{of 0-rows of A}}. \tag{2.4}$$

The DASTs listed above correspond to $8, 2, 2, 2, 2, 2, 1, 1$ DASASMs of order 7 with $\mathrm{N}_1(A) = 4$, respectively. This is in accordance with Theorem 1.3 as there are 20 CSPPs in a $3 \times 3 \times 3$ box.

We now introduce another set of triangular arrays that is, on the one hand, equinumerous with the set of $A \in \mathrm{DASASM}(2n+1)$ such that $\mathrm{N}_1(A) = n+1$, and, on the other, contains all ASTs of order n.

Definition 2.3. A *quasi alternating sign triangle* (QAST) of order n is a triangular array $(a_{i,j})_{1 \le i \le n, i \le j \le 2n-i}$ in which each entry is 0, 1 or -1 and the following conditions are fulfilled.

(1) The non-zero entries alternate in each row and column.
(2) The row sums are 1 for rows $1, 2, \ldots, n-1$, and 0 or 1 for row n.
(3) The topmost non-zero entry in each column is 1 (if it exists).

The set of order n QASTs is denoted by $\mathrm{QAST}(n)$.

To construct a bijection between $\mathrm{QAST}(n)$ and $\{A \in \mathrm{DASASM}(2n+1) \mid \mathrm{N}_1(A) = n+1\}$, recall from Corollary 2.1 (2) that the objects in the latter set correspond to triangular six-vertex configurations on $\mathcal{T}_n$ such that, in each row, the leftmost and the rightmost vertical edge point upwards. Now we perform the following operations on such configurations:

(1) For the second vertex of each row (excluding the first and the last row, which contain only degree 1 vertices), we interchange the orientation of the bottom vertical edge with the orientation of the left horizontal edge incident with this vertex.
(2) For the penultimate vertex of each row (excluding the first and the last row), we interchange the orientation of the bottom vertical edge with the orientation of the right horizontal edge incident with this vertex.

This leads to triangular six-vertex configurations of order n such that, in each row, the leftmost horizontal edge points to the right and the rightmost horizontal edge points to the left with the exception of the rightmost horizontal edge in the penultimate row. Compare this to the triangular six-vertex configurations in Corollary 2.1 (1) which were shown to correspond to ASTs of order n. Similarly, it can be shown that the present configurations correspond to QASTs of order n.

If we perform only the first operation above, we obtain triangular six-vertex configurations that are equivalent to the following triangular arrays. These arrays can be seen as a mixture of ASTs and DASTs.

Definition 2.4. A *mixed alternating sign triangle* (MAST) of order n is a triangular array $(a_{i,j})_{1\le i\le n, i\le j\le 2n-i}$ in which each entry is 0, 1 or -1 and the following conditions are fulfilled.

(1) The non-zero entries alternate in each row and column.
(2) The column sums are 0 for columns $n+1,\dots,2n-1$.
(3) The first non-zero entry in each row and each column is 1 (if it exists).

Similarly, it can be seen that $\mathrm{AST}(n)$ is in bijection with the set of MASTs of order n whose bottom entry is 1, and also in bijection with the set of MASTs of order n whose n-th column has sum 0.

Here are two related remarks.

- As $\mathrm{AST}(n) \subseteq \mathrm{QAST}(n)$, and $\mathrm{AST}(n)$ is equinumerous with the set of $n\times n$ ASMs, while $\mathrm{QAST}(n)$ is equinumerous with the set of CSPPs in an $n\times n\times n$ box, there should exist a natural subset of the set of CSPPs in an $n\times n\times n$ box that has the same cardinality as the set of order n ASMs.
- The set of order n QASTs can be partitioned according to the entry at the bottom and the central column sum: (i) the bottom entry is 1, (ii) the bottom entry is 0 and the central column sum is 0, (iii) the bottom entry is 0 and the central column sum is 1. Each of the first two sets is actually equinumerous with $\mathrm{AST}(n)$. The set of order n QASTs that belong to the first or third class are equinumerous with odd DASASM-triangles of order $n-1$ with the property that the entries of each row—except for possibly the bottom row—sum to 1, where possibly either or both of the boundary entries are disregarded. Indeed, such a QAST is bijectively transformed into such an odd DASASM-triangle by replacing each 0 on the diagonals by -1 if it is contained in a column with sum 1. Compare this to Corollary 2.1 (3) to see that the set of odd DASASM-triangles A of order $n-1$ with $\mathrm{N}_0(A)=n-1$ is a subset of the set of these DASASM-triangles.

3. Weights, local equations and the partition function

We have seen that the various classes of extreme DASASMs under consideration in Theorems 1.2–1.5 have an alternative interpretation in terms of certain orientations of triangular regions of the square grid. The differences between the classes are due to the various conditions along the left, right and bottom boundary. In this section, we define a universal generating function—in the language of physics a universal *partition function*—for all of these orientations of $\mathcal{T}_n$ as well as two refinements according to the orientation of the bottom vertical edge. These generating functions involve *boundary parameters* which are sufficiently general such that the generating function of each class of extreme DASASMs is a specialization of the universal generating function or one of its refinements.

3.1. Weights.

We assign a weight $\mathrm{W}(C)$ to each triangular six-vertex configuration C. This weight is the product of the vertex weights, to be defined next. The weight of an individual vertex depends—besides a global variable q—on the *orientations of the surrounding edges*, on a *label* which is assigned to the vertex, and, for bulk vertices, on the *position of the label*.

We define

$$\bar{x} = x^{-1} \quad \text{and} \quad \sigma(x) = x - \bar{x},$$

and we use this notation throughout the rest of this paper.

The vertex weights are provided in Table 1, with the exception of the degree 1 vertices, which always have weight 1. The label of the vertex is denoted by u, and we assume in this table that for

bulk vertices, the label is situated in the south-west corner, as follows.

Also elsewhere, if the position of the label of a degree 4 vertex is not indicated, it is assumed to be in the south-west corner. If the label appears in some other corner, one has to rotate the diagram until the label is in the south-west corner, and then determine the weight. The left boundary weights depend on the *left boundary constants* $\alpha_L, \beta_L, \gamma_L, \delta_L$, and the right boundary weights depend on the *right boundary constants* $\alpha_R, \beta_R, \gamma_R, \delta_R$. For boundary vertices the position of the label does not matter.

Bulk weights	Left boundary weights	Right boundary weights	Matrix entry
$\mathrm{W}(\,,u) = 1$	$\mathrm{W}(\,,u) = \frac{\beta_L\, qu+\gamma_L\, \bar{q}\bar{u}}{\sigma(q^2)}$	$\mathrm{W}(\,,u) = \frac{\beta_R\, q\bar{u}+\gamma_R\, \bar{q}u}{\sigma(q^2)}$	1
$\mathrm{W}(\,,u) = 1$	$\mathrm{W}(\,,u) = \frac{\gamma_L\, qu+\beta_L\, \bar{q}\bar{u}}{\sigma(q^2)}$	$\mathrm{W}(\,,u) = \frac{\gamma_R\, q\bar{u}+\beta_R\, \bar{q}u}{\sigma(q^2)}$	-1
$\mathrm{W}(\,,u) = \frac{\sigma(q^2u)}{\sigma(q^4)}$	$\mathrm{W}(\,,u) = \alpha_L\, \frac{\sigma(q^2u^2)}{\sigma(q^2)}$		0
$\mathrm{W}(\,,u) = \frac{\sigma(q^2u)}{\sigma(q^4)}$	$\mathrm{W}(\,,u) = \delta_L\, \frac{\sigma(q^2u^2)}{\sigma(q^2)}$		0
$\mathrm{W}(\,,u) = \frac{\sigma(q^2\bar{u})}{\sigma(q^4)}$		$\mathrm{W}(\,,u) = \alpha_R\, \frac{\sigma(q^2\bar{u}^2)}{\sigma(q^2)}$	0
$\mathrm{W}(\,,u) = \frac{\sigma(q^2\bar{u})}{\sigma(q^4)}$		$\mathrm{W}(\,,u) = \delta_R\, \frac{\sigma(q^2\bar{u}^2)}{\sigma(q^2)}$	0

TABLE 1. Vertex weights

The following observations are crucial.

- For bulk vertices, the weight is unchanged when reversing the orientation of all edges.
- For bulk vertices, rotation of the configuration or the label by 90° is equivalent to replacing the label u by $\bar{u}$.
- Reflection of a local configuration in the vertical symmetry axis is equivalent to replacing u by $\bar{u}$ and, in addition for boundary weights, interchanging L and R in the boundary constants.

The *label* of a vertex in $\mathcal{T}_n$ is determined as follows: The path in $\mathcal{T}_n$ that is induced by the sequence of vertices corresponding to the entries in (2.2) is associated with the *spectral parameter* u_j, see also Figure 3. The label of a vertex is then the product of the spectral parameters associated with the paths which contain that vertex. In the case of bulk vertices, there are two such paths, while the path is unique for boundary vertices.

Example. The left configuration in Figure 2 has the weight

$$\delta_L \frac{\sigma(q^2u_1^2)}{\sigma(q^2)} \cdot \frac{\sigma(q^2u_1u_2)}{\sigma(q^4)} \cdot \frac{\sigma(q^2u_1u_3)}{\sigma(q^4)} \cdot \frac{\sigma(q^2u_1u_4)}{\sigma(q^4)} \cdot 1 \cdot \frac{\sigma(q^2\bar{u}_1\bar{u}_2)}{\sigma(q^4)} \cdot \delta_R \frac{\sigma(q^2\bar{u}_1^2)}{\sigma(q^2)}$$
$$\times \frac{\beta_L q u_2 + \gamma_L \bar{q}\bar{u}_2}{\sigma(q^2)} \cdot \frac{\sigma(q^2\bar{u}_2\bar{u}_3)}{\sigma(q^4)} \cdot \frac{\sigma(q^2\bar{u}_2\bar{u}_4)}{\sigma(q^4)} \cdot 1 \cdot \frac{\beta_R q\bar{u}_2 + \gamma_R \bar{q} u_2}{\sigma(q^2)}$$
$$\times \delta_L \frac{\sigma(q^2u_3^2)}{\sigma(q^2)} \cdot \frac{\sigma(q^2u_3u_4)}{\sigma(q^4)} \cdot \frac{\beta_R q\bar{u}_3 + \gamma_R \bar{q} u_3}{\sigma(q^2)},$$

where rows $2, 3, 4$ of vertices in the graph correspond to the lines $1, 2, 3$ above, respectively, and the weights are read from left to right.

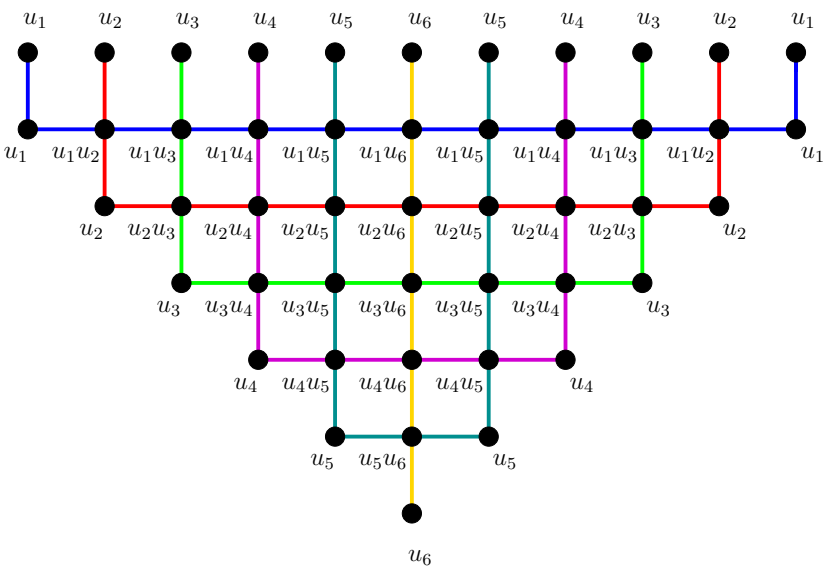

FIGURE 3. Spectral parameters.

3.2. **Local equations.** In this subsection, we demonstrate that the weights introduced in the previous subsection satisfy certain local equations. The most prominent local equation is the *Yang–Baxter equation*, which is stated first. The schematic diagrams in this subsection have to be interpreted as follows, see for instance (3.1). Each diagram is a graph which involves a number of external edges, for which only one endpoint is indicated with a bullet. Close to the other endpoint of such an edge, we place an o_i which indicates its orientation, i.e.,"in" or "out", relative to the indicated endpoint of the external edge. A diagram represents the generating function of all orientations of the graph such that the external edges have the prescribed orientation, degree 4 vertices are balanced, and the vertex weights are as given in Table 1, where the parameter near a vertex indicates its label.

Theorem 3.1 (Yang–Baxter equation, [Bax89])**.** *If* $xyz = q^2$ *and* $o_1, o_2, \ldots, o_6 \in \{\text{in}, \text{out}\}$*, then*

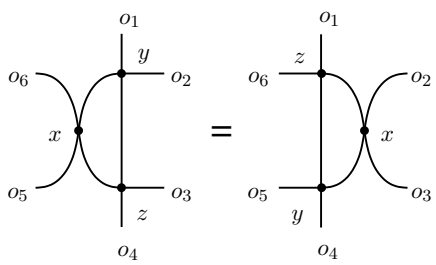

. (3.1)

The theorem can be proven by verifying that, for each choice of orientations of the external edges, (3.1) is either trivial or reduces to a simple identity satisfied by the bulk weights in Table 1.

To deal with triangular six-vertex configurations, we also need left and right forms of the reflection equation. The reflection equation was introduced (and applied to six-vertex model bulk weights) by Cherednik [Che84, Eq. (10)], with important further results being obtained by Sklyanin [Skl88].

Theorem 3.2 (Left and right reflection equations)**.** *Suppose $x = q^2\bar{u}v, y = uv$ and the bulk weights are as given in Table 1. Then*

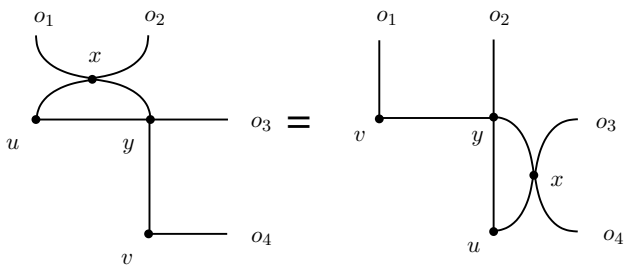

(3.2)

for all $o_1, o_2, o_3, o_4 \in \{\text{in}, \text{out}\}$ if and only if there exist parameters $\alpha_L, \beta_L, \gamma_L, \delta_L$ independent of u and a function $f(u)$ such that

$$\mathrm{W}(\text{\tikz[scale=0.4]{...}}, u) = \frac{\beta_L\, qu + \gamma_L\, \bar{q}\bar{u}}{\sigma(q^2)} f(u), \qquad \mathrm{W}(\text{\tikz[scale=0.4]{...}}, u) = \frac{\gamma_L\, qu + \beta_L\, \bar{q}\bar{u}}{\sigma(q^2)} f(u),$$

and

$$\mathrm{W}(\text{\tikz[scale=0.4]{...}}, u) = \alpha_L\, \frac{\sigma(q^2u^2)}{\sigma(q^2)} f(u), \qquad \mathrm{W}(\text{\tikz[scale=0.4]{...}}, u) = \delta_L\, \frac{\sigma(q^2u^2)}{\sigma(q^2)} f(u),$$

i.e., up to a multiplicative factor, the left boundary weights are chosen as in Table 1. Similarly, if $x = q^2\bar{u}v, y = \bar{u}\bar{v}$ and the bulk weights are chosen as in Table 1, then

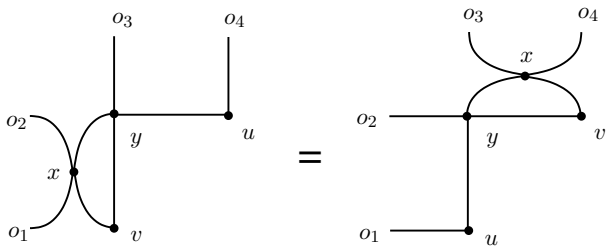

(3.3)

for all $o_1, o_2, o_3, o_4 \in \{\text{in}, \text{out}\}$ if and only if $\mathrm{W}(\text{\tikz[scale=0.4]{...}}, u), \mathrm{W}(\text{\tikz[scale=0.4]{...}}, u), \mathrm{W}(\text{\tikz[scale=0.4]{...}}, u), \mathrm{W}(\text{\tikz[scale=0.4]{...}}, u)$ are chosen—up to multiplication by a function $g(u)$—as in Table 1.

The result was obtained, independently, by de Vega and González-Ruiz [dVGR93, Eq. (15)], and Ghoshal and Zamolodchikov [GZ94, Eq. (5.12)]. We also provide a proof below.

Proof. First we show that every solution of (3.2) is of the form as given in the statement of the theorem. Set $o_1 = o_4 = \text{in}$, $o_2 = o_3 = \text{out}$ in (3.2) and obtain (after subtraction of an identical term from each side)

$$\begin{aligned}\mathrm{W}(\text{\tikz[scale=0.4]{...}}, x)\, \mathrm{W}(\text{\tikz[scale=0.4]{...}}, u)\, \mathrm{W}(\text{\tikz[scale=0.4]{...}}, v) + \mathrm{W}(\text{\tikz[scale=0.4]{...}}, y)\, \mathrm{W}(\text{\tikz[scale=0.4]{...}}, u)\, \mathrm{W}(\text{\tikz[scale=0.4]{...}}, v)\\ = \mathrm{W}(\text{\tikz[scale=0.4]{...}}, x)\, \mathrm{W}(\text{\tikz[scale=0.4]{...}}, u)\, \mathrm{W}(\text{\tikz[scale=0.4]{...}}, v) + \mathrm{W}(\text{\tikz[scale=0.4]{...}}, y)\, \mathrm{W}(\text{\tikz[scale=0.4]{...}}, u)\, \mathrm{W}(\text{\tikz[scale=0.4]{...}}, v).\end{aligned} \tag{3.4}$$

The equation shows in particular that $\mathrm{W}(\text{\tikz[scale=0.4]{...}}, u) \equiv 0$ if and only if $\mathrm{W}(\text{\tikz[scale=0.4]{...}}, u) \equiv 0$. We first assume $\mathrm{W}(\text{\tikz[scale=0.4]{...}}, u) \not\equiv 0$ and $\mathrm{W}(\text{\tikz[scale=0.4]{...}}, u) \not\equiv 0$. We divide (3.4) by $\mathrm{W}(\text{\tikz[scale=0.4]{...}}, u)\, \mathrm{W}(\text{\tikz[scale=0.4]{...}}, v)$ and deduce

$$\frac{\mathrm{W}(\text{\tikz[scale=0.4]{...}}, u)}{\mathrm{W}(\text{\tikz[scale=0.4]{...}}, u)} \left(\mathrm{W}(\text{\tikz[scale=0.4]{...}}, x) \frac{\mathrm{W}(\text{\tikz[scale=0.4]{...}}, v)}{\mathrm{W}(\text{\tikz[scale=0.4]{...}}, v)} - \mathrm{W}(\text{\tikz[scale=0.4]{...}}, y) \right) = -\,\mathrm{W}(\text{\tikz[scale=0.4]{...}}, y) \frac{\mathrm{W}(\text{\tikz[scale=0.4]{...}}, v)}{\mathrm{W}(\text{\tikz[scale=0.4]{...}}, v)} + \mathrm{W}(\text{\tikz[scale=0.4]{...}}, x).$$

After plugging in the definitions for the bulk weights and setting $x = q^2\bar{u}v$, $y = uv$, we can deduce that

$$-\mathrm{W}(\tikzcd{\bullet \arrow[r] \arrow[d] & \bullet \arrow[d] \arrow[r] & \bullet \arrow[d] \\ \bullet \arrow[r] & \bullet \arrow[r] & \bullet}, y)\frac{\mathrm{W}(\tikzcd{\bullet \arrow[d] & \bullet \arrow[l] \arrow[d] \\ \bullet & \bullet \arrow[l]}, v)}{\mathrm{W}(\tikzcd{\bullet \arrow[d] & \bullet \arrow[l] \arrow[d] \\ \bullet & \bullet \arrow[l]}, v)} + \mathrm{W}(\tikzcd{\bullet \arrow[r] \arrow[d] & \bullet \arrow[d] \arrow[r] & \bullet \arrow[d] \\ \bullet \arrow[r] & \bullet \arrow[r] & \bullet}, x) = \beta_L qu + \gamma_L \bar{q}\bar{u},$$

$$\mathrm{W}(\tikzcd{\bullet \arrow[r] \arrow[d] & \bullet \arrow[d] \arrow[r] & \bullet \arrow[d] \\ \bullet \arrow[r] & \bullet \arrow[r] & \bullet}, x)\frac{\mathrm{W}(\tikzcd{\bullet \arrow[d] & \bullet \arrow[l] \arrow[d] \\ \bullet & \bullet \arrow[l]}, v)}{\mathrm{W}(\tikzcd{\bullet \arrow[d] & \bullet \arrow[l] \arrow[d] \\ \bullet & \bullet \arrow[l]}, v)} - \mathrm{W}(\tikzcd{\bullet \arrow[r] \arrow[d] & \bullet \arrow[d] \arrow[r] & \bullet \arrow[d] \\ \bullet \arrow[r] & \bullet \arrow[r] & \bullet}, y) = \gamma_L qu + \beta_L \bar{q}\bar{u},$$

with $\beta_L = \frac{\bar{q}\bar{v}}{\sigma(q^4)} - \frac{qv}{\sigma(q^4)}\frac{\mathrm{W}(\tikzcd{\bullet \arrow[d] & \bullet \arrow[l] \arrow[d] \\ \bullet & \bullet \arrow[l]}, v)}{\mathrm{W}(\tikzcd{\bullet \arrow[d] & \bullet \arrow[l] \arrow[d] \\ \bullet & \bullet \arrow[l]}, v)}$ and $\gamma_L = \frac{\bar{q}\bar{v}}{\sigma(q^4)}\frac{\mathrm{W}(\tikzcd{\bullet \arrow[d] & \bullet \arrow[l] \arrow[d] \\ \bullet & \bullet \arrow[l]}, v)}{\mathrm{W}(\tikzcd{\bullet \arrow[d] & \bullet \arrow[l] \arrow[d] \\ \bullet & \bullet \arrow[l]}, v)} - \frac{qv}{\sigma(q^4)}$. Since these are both parameters independent of u and at least one of them is non-zero, we can deduce that $\mathrm{W}(\tikzcd{\bullet \arrow[d] & \bullet \arrow[l] \arrow[d] \\ \bullet & \bullet \arrow[l]}, u)$ and $\mathrm{W}(\tikzcd{\bullet \arrow[d] & \bullet \arrow[l] \arrow[d] \\ \bullet & \bullet \arrow[l]}, u)$ are of the form stated in the theorem.

In (3.2), we now choose $o_1 = o_2 = o_3 = \mathrm{in}$, $o_4 = \mathrm{out}$ and obtain

$$\begin{aligned}&\mathrm{W}(\tikzcd{\bullet \arrow[r] \arrow[d] & \bullet \arrow[d] \arrow[r] & \bullet \arrow[d] \\ \bullet \arrow[r] & \bullet \arrow[r] & \bullet}, x)\,\mathrm{W}(\tikzcd{\bullet \arrow[d] & \bullet \arrow[l] \arrow[d] \\ \bullet & \bullet \arrow[l]}, y)\,\mathrm{W}(\tikzcd{\bullet \arrow[d] & \bullet \arrow[l] \arrow[d] \\ \bullet & \bullet \arrow[l]}, u)\,\mathrm{W}(\tikzcd{\bullet \arrow[d] & \bullet \arrow[l] \arrow[d] \\ \bullet & \bullet \arrow[l]}, v)\\ =\ &\mathrm{W}(\tikzcd{\bullet \arrow[d] & \bullet \arrow[l] \arrow[d] \\ \bullet & \bullet \arrow[l]}, x)\,\mathrm{W}(\tikzcd{\bullet \arrow[r] \arrow[d] & \bullet \arrow[d] \arrow[r] & \bullet \arrow[d] \\ \bullet \arrow[r] & \bullet \arrow[r] & \bullet}, y)\,\mathrm{W}(\tikzcd{\bullet \arrow[d] & \bullet \arrow[l] \arrow[d] \\ \bullet & \bullet \arrow[l]}, u)\,\mathrm{W}(\tikzcd{\bullet \arrow[d] & \bullet \arrow[l] \arrow[d] \\ \bullet & \bullet \arrow[l]}, v)+\mathrm{W}(\tikzcd{\bullet \arrow[d] & \bullet \arrow[l] \arrow[d] \\ \bullet & \bullet \arrow[l]}, x)\,\mathrm{W}(\tikzcd{\bullet \arrow[d] & \bullet \arrow[l] \arrow[d] \\ \bullet & \bullet \arrow[l]}, u)\,\mathrm{W}(\tikzcd{\bullet \arrow[d] & \bullet \arrow[l] \arrow[d] \\ \bullet & \bullet \arrow[l]}, v)+\mathrm{W}(\tikzcd{\bullet \arrow[d] & \bullet \arrow[l] \arrow[d] \\ \bullet & \bullet \arrow[l]}, y)\,\mathrm{W}(\tikzcd{\bullet \arrow[d] & \bullet \arrow[l] \arrow[d] \\ \bullet & \bullet \arrow[l]}, u)\,\mathrm{W}(\tikzcd{\bullet \arrow[d] & \bullet \arrow[l] \arrow[d] \\ \bullet & \bullet \arrow[l]}, v).\end{aligned}$$

In this identity, every quantity is known (in the case of $\mathrm{W}(\tikzcd{\bullet \arrow[d] & \bullet \arrow[l] \arrow[d] \\ \bullet & \bullet \arrow[l]}, u)$ and $\mathrm{W}(\tikzcd{\bullet \arrow[d] & \bullet \arrow[l] \arrow[d] \\ \bullet & \bullet \arrow[l]}, u)$ up to $\beta_L, \gamma_L, f(u)$), except for $\mathrm{W}(\tikzcd{\bullet \arrow[d] & \bullet \arrow[l] \arrow[d] \\ \bullet & \bullet \arrow[l]}, u)$ and $\mathrm{W}(\tikzcd{\bullet \arrow[d] & \bullet \arrow[l] \arrow[d] \\ \bullet & \bullet \arrow[l]}, v)$. The identity thereby becomes

$$(\beta_L \bar{v}\bar{q} + \gamma_L qv)\left(\mathrm{W}(\tikzcd{\bullet \arrow[d] & \bullet \arrow[l] \arrow[d] \\ \bullet & \bullet \arrow[l]}, u)\sigma(q^2v^2)f(v) - \mathrm{W}(\tikzcd{\bullet \arrow[d] & \bullet \arrow[l] \arrow[d] \\ \bullet & \bullet \arrow[l]}, v)\sigma(q^2v^2)f(u)\right) = 0$$

from which we see that $\mathrm{W}(\tikzcd{\bullet \arrow[d] & \bullet \arrow[l] \arrow[d] \\ \bullet & \bullet \arrow[l]}, u)$ is also of the form given in the theorem. In order to obtain the expression for $\mathrm{W}(\tikzcd{\bullet \arrow[d] & \bullet \arrow[l] \arrow[d] \\ \bullet & \bullet \arrow[l]}, u)$, choose $o_1 = o_2 = \mathrm{in}$ and $o_3 = o_4 = \mathrm{out}$ in (3.2), which gives

$$\mathrm{W}(\tikzcd{\bullet \arrow[d] & \bullet \arrow[l] \arrow[d] \\ \bullet & \bullet \arrow[l]}, u)\,\mathrm{W}(\tikzcd{\bullet \arrow[d] & \bullet \arrow[l] \arrow[d] \\ \bullet & \bullet \arrow[l]}, v) = \mathrm{W}(\tikzcd{\bullet \arrow[d] & \bullet \arrow[l] \arrow[d] \\ \bullet & \bullet \arrow[l]}, u)\,\mathrm{W}(\tikzcd{\bullet \arrow[d] & \bullet \arrow[l] \arrow[d] \\ \bullet & \bullet \arrow[l]}, v). \tag{3.5}$$

If, on the other hand, $\mathrm{W}(\tikzcd{\bullet \arrow[d] & \bullet \arrow[l] \arrow[d] \\ \bullet & \bullet \arrow[l]}, u) \equiv 0$ and $\mathrm{W}(\tikzcd{\bullet \arrow[d] & \bullet \arrow[l] \arrow[d] \\ \bullet & \bullet \arrow[l]}, u) \equiv 0$, we choose $\beta_L = \gamma_L = 0$ and the assertion also follows simply from (3.5).

Conversely, it is straightforward to check that the solution stated in the theorem satisfies (3.2) for all $o_1, o_2, o_3, o_4 \in \{\mathrm{in}, \mathrm{out}\}$.

The right reflection equation follows from the left reflection equation by substituting $u \mapsto \bar{v}, v \mapsto \bar{u}$. □

There are two additional simple rules that are necessary. For $o_1, o_2, o_3, o_4 \in \{\mathrm{in}, \mathrm{out}\}$, we have

$$\mathrm{W}(\tikzcd{ & o_2 \arrow[d] & \\ o_1 \arrow[r] & \bullet \arrow[r] & o_3 \\ & o_4 \arrow[u] & }, q^2) = \delta_{o_1,\widetilde{o_2}}\delta_{o_3,\widetilde{o_4}}, \tag{3.6}$$

and

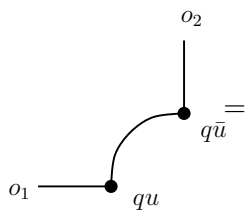

$$= \left(\mathrm{W}(\tikzcd{\bullet \arrow[r] \arrow[d] & \bullet \arrow[d] \arrow[r] & \bullet \arrow[d] \\ \bullet \arrow[r] & \bullet \arrow[r] & \bullet}, qu)\,\mathrm{W}(\tikzcd{\bullet \arrow[d] & \bullet \arrow[l] \arrow[d] \\ \bullet & \bullet \arrow[l]}, q\bar{u}) + \mathrm{W}(\tikzcd{\bullet \arrow[d] & \bullet \arrow[l] \arrow[d] \\ \bullet & \bullet \arrow[l]}, qu)\,\mathrm{W}(\tikzcd{\bullet \arrow[d] & \bullet \arrow[l] \arrow[d] \\ \bullet & \bullet \arrow[l]}, q\bar{u})\right)\delta_{o_1,\widetilde{o_2}}, \tag{3.7}$$

where $\widetilde{\mathrm{in}} = \mathrm{out}$, $\widetilde{\mathrm{out}} = \mathrm{in}$ and δ is the Kronecker delta.

3.3. **The (universal) partition function and its specializations.** The universal partition function is the generating function of all permissible orientations of $\mathcal{T}_n$ with respect to the weight function we have defined, that is

$$\sum_C \mathrm{W}(C) =: Z_n(u_1, \ldots, u_n; u_{n+1}),$$

where the sum is over all orientations C of $\mathcal{T}_n$ in which each bulk vertex has two incoming and two outgoing edges and the top edges point up.

Moreover, $Z_n^{\uparrow}(u_1,\dots,u_n;u_{n+1})$ and $Z_n^{\downarrow}(u_1,\dots,u_n;u_{n+1})$ denote the restrictions of this sum to configurations in which the bottom vertical edge points up or down, respectively. In [BFK17, Eq. (24)], it was shown that the two refinements are expressible in terms of the full partition function as follows.

Lemma 3.3. *The universal partition function and its refinements satisfy*

$$Z_n^{\uparrow}(u_1,\dots,u_n;u_{n+1}) = \frac{1}{2}\left(Z_n(u_1,\dots,u_n;u_{n+1}) + (-1)^n Z_n(u_1,\dots,u_n;-u_{n+1})\right),$$
$$Z_n^{\downarrow}(u_1,\dots,u_n;u_{n+1}) = \frac{1}{2}\left(Z_n(u_1,\dots,u_n;u_{n+1}) - (-1)^n Z_n(u_1,\dots,u_n;-u_{n+1})\right).$$

In that paper we assumed more special boundary weights, but the proof of the lemma is independent of the form of the boundary weights, since the argument involves only vertex weights that depend on u_{n+1}, and this parameter appears in none of the boundary weights.

Next, we introduce three specializations of the spectral parameters $u_1,\dots,u_{n+1}$, the global parameter q and the boundary parameters $\alpha_L,\beta_L,\gamma_L,\delta_L,\alpha_R,\beta_R,\gamma_R,\delta_R$, for which $Z_n(u_1,\dots,u_n;u_{n+1})$ counts extreme DASASMs in Theorems 1.2, 1.3 and 1.5, respectively. In Sections 5–7, we then derive determinant or Pfaffian expressions for these specializations of the partition function.[2] We then introduce a fourth specialization which applies to the case of all DASASMs, as studied in [BFK17].

First observe that if we specialize $u_j = 1$ for all j and $q = e^{\frac{i\pi}{6}} = \frac{\sqrt{3}+i}{2}$, then all bulk weights are equal to 1.

3.3.1. *The* AST *specialization.* By Corollary 2.1 (1), we need to have

$$\mathrm{W}(\text{⬉}, 1) = \mathrm{W}(\text{⬊}, 1) = \mathrm{W}(\text{⬈}, 1) = \mathrm{W}(\text{⬋}, 1) = 0,$$
$$\mathrm{W}(\text{⬊}, 1) = \mathrm{W}(\text{⬉}, 1) = \mathrm{W}(\text{⬋}, 1) = \mathrm{W}(\text{⬈}, 1) = 1,$$

if $q = e^{\frac{i\pi}{6}}$. However, in order to prove a generalization of Theorem 1.2, namely Theorem 5.5, it will be crucial to introduce an additional global parameter p such that the following is satisfied (setting $p = 1$ then leads to the above conditions):

$$\mathrm{W}(\text{⬉}, p) = \mathrm{W}(\text{⬊}, p) = \mathrm{W}(\text{⬈}, p) = \mathrm{W}(\text{⬋}, p) = 0, \tag{3.8}$$

$$\mathrm{W}(\text{⬊}, p) = \mathrm{W}(\text{⬉}, p) = \frac{\sigma(p^2q^2)}{\sigma(q^2)} \quad \text{and} \quad \mathrm{W}(\text{⬋}, p) = \mathrm{W}(\text{⬈}, p) = \frac{\sigma(\bar{p}^2q^2)}{\sigma(q^2)}. \tag{3.9}$$

This is satisfied if we assign the following values to the boundary parameters. Note that this is true even if we do not specialize q. This is also the case for the two other specializations.

AST	α_L	β_L	γ_L	δ_L	α_R	β_R	γ_R	δ_R
	0	$-\bar{p}\bar{q}$	pq	1	0	$-p\bar{q}$	$\bar{p}q$	1

The explicit boundary weights are therefore as follows.

$$\mathrm{W}(\text{⬉}, u) = \frac{\sigma(p\bar{u})}{\sigma(q^2)}, \qquad \mathrm{W}(\text{⬊}, u) = \frac{\sigma(pq^2u)}{\sigma(q^2)}, \qquad \mathrm{W}(\text{⬊}, u) = 0, \qquad \mathrm{W}(\text{⬉}, u) = \frac{\sigma(q^2u^2)}{\sigma(q^2)},$$
$$\mathrm{W}(\text{⬈}, u) = \frac{\sigma(\bar{p}u)}{\sigma(q^2)}, \qquad \mathrm{W}(\text{⬋}, u) = \frac{\sigma(\bar{p}q^2\bar{u})}{\sigma(q^2)}, \qquad \mathrm{W}(\text{⬋}, u) = 0, \qquad \mathrm{W}(\text{⬈}, u) = \frac{\sigma(q^2\bar{u}^2)}{\sigma(q^2)}$$

[2] In a forthcoming paper [BF], we will study the universal partition function of diagonally symmetric ASMs using the weights in Table 1. In contrast to $Z_n(u_1,\dots,u_n;u_{n+1})$, we are able to derive an expression for the universal partition function in this case.

We denote this specialization of the universal partition function as $Z_n(u_1,\dots,u_n;u_{n+1})_{\mathrm{AST}}$ and record that

$$Z_n(1,\dots,1;1)_{\mathrm{AST}}\big|_{p=1,q=e^{\frac{i\pi}{6}}} = |\mathrm{AST}(n)|\,.$$

3.3.2. *The* QAST *specialization.* By Corollary 2.1 (2), we require

$$\mathrm{W}(\text{⤷},1)=\mathrm{W}(\text{⤶},1)=\mathrm{W}(\text{⤸},1)=\mathrm{W}(\text{⤹},1)=0,$$
$$\mathrm{W}(\text{⤷},1)=\mathrm{W}(\text{⤶},1)=\mathrm{W}(\text{⤹},1)=\mathrm{W}(\text{⤸},1)=1,$$

and the bottom vertical edge needs to point up, that is we need to work with $Z_n^{\uparrow}(u_1,\dots,u_n;u_{n+1})$. Again, we introduce a parameter p that is set to 1 for proving Theorem 1.3, and require

$$\mathrm{W}(\text{⤷},p)=\mathrm{W}(\text{⤶},p)=\mathrm{W}(\text{⤸},p)=\mathrm{W}(\text{⤹},p)=0,$$

as well as

$$\mathrm{W}(\text{⤷},p)=\mathrm{W}(\text{⤶},p)=\frac{\sigma(p^2q^2)}{\sigma(q^2)}\quad\text{and}\quad \mathrm{W}(\text{⤹},p)=\mathrm{W}(\text{⤸},p)=\frac{\sigma(\bar{p}^2q^2)}{\sigma(q^2)}.$$

We choose the boundary parameters as follows.

QAST	α_L	β_L	γ_L	δ_L	α_R	β_R	γ_R	δ_R
	0	pq	$-\bar{p}\bar{q}$	1	0	$\bar{p}q$	$-p\bar{q}$	1

In this case, the explicit boundary weights are

$$\mathrm{W}(\text{⤷},u)=\frac{\sigma(pq^2u)}{\sigma(q^2)},\qquad \mathrm{W}(\text{⤷},u)=\frac{\sigma(p\bar{u})}{\sigma(q^2)},\qquad \mathrm{W}(\text{⤶},u)=0,\qquad \mathrm{W}(\text{⤶},u)=\frac{\sigma(q^2u^2)}{\sigma(q^2)},$$
$$\mathrm{W}(\text{⤹},u)=\frac{\sigma(\bar{p}q^2\bar{u})}{\sigma(q^2)},\qquad \mathrm{W}(\text{⤸},u)=\frac{\sigma(\bar{p}u)}{\sigma(q^2)},\qquad \mathrm{W}(\text{⤹},u)=0,\qquad \mathrm{W}(\text{⤸},u)=\frac{\sigma(q^2\bar{u}^2)}{\sigma(q^2)}.$$

We denote this specialization of the universal partition function as $Z_n^{\uparrow}(u_1,\dots,u_n;u_{n+1})_{\mathrm{QAST}}$ and obtain that

$$Z_n^{\uparrow}(1,\dots,1;1)_{\mathrm{QAST}}\Big|_{p=1,q=e^{\frac{i\pi}{6}}} = |\mathrm{QAST}(n)|\,.$$

3.3.3. *The* OOSASM *specialization.* Recalling that $A\in\mathrm{DASASM}(2n+1)$ satisfies $\mathrm{N}_0(A)=2n$ if and only if all entries on the diagonals are zero except for the central entry of A (see the proof of Proposition 1.1 in Section 1.1), we need to have

$$\mathrm{W}(\text{⤷},1)=\mathrm{W}(\text{⤶},1)=\mathrm{W}(\text{⤹},1)=\mathrm{W}(\text{⤸},1)=0,$$
$$\mathrm{W}(\text{⤶},1)=\mathrm{W}(\text{⤷},1)=\mathrm{W}(\text{⤹},1)=\mathrm{W}(\text{⤸},1)=1,$$

and so it is natural to choose the following.

OOSASM	$\alpha_L=\alpha_R$	$\beta_L=\beta_R$	$\gamma_L=\gamma_R$	$\delta_L=\delta_R$
	1	0	0	1

Here, the left boundary weights are

$$\mathrm{W}(\text{⤷},u)=\mathrm{W}(\text{⤶},u)=0,\quad \mathrm{W}(\text{⤶},u)=\mathrm{W}(\text{⤷},u)=\frac{\sigma(q^2u^2)}{\sigma(q^2)},$$
$$\mathrm{W}(\text{⤹},u)=\mathrm{W}(\text{⤸},u)=0,\quad \mathrm{W}(\text{⤹},u)=\mathrm{W}(\text{⤸},u)=\frac{\sigma(q^2\bar{u}^2)}{\sigma(q^2)}.$$

In this case, the left boundary weight in row i of a configuration with non-zero weight is $\frac{\sigma(q^2u_i^2)}{\sigma(q^2)}$, while the right boundary weight in row i is $\frac{\sigma(q^2\bar{u}_i^2)}{\sigma(q^2)}$. This implies that the universal partition function

has the factor $\prod_{i=1}^{n} \frac{\sigma(q^2u_i^2)\sigma(q^2\bar{u}_i^2)}{\sigma(q^2)^2}$ in this specialization. We cancel this factor and denote the reduced specialization as $Z_n(u_1,\dots,u_n;u_{n+1})_{\mathrm{OOSASM}}$. Therefore,

$$Z_n(1,\dots,1;1)_{\mathrm{OOSASM}}\big|_{q=e^{\frac{i\pi}{6}}} = |\,\mathrm{OOSASM}(2n+1)|.$$

Note that this normalization of the universal partition function could alternatively be achieved by taking the functions $f(u)$ and $g(u)$ in Theorem 3.2 to be $f(u)=\sigma(q^2)/\sigma(q^2u^2)$ and $g(u)=\sigma(q^2)/\sigma(q^2\bar{u}^2)$. Kuperberg used in [Kup02] analogous specializations to study OSASMs and OOSASMs of order $4n$.

3.3.4. *The* DASASM *specialization.* If we require

$$\mathrm{W}(\text{\tiny\textbf{t}}_{\leftarrow},1)=\mathrm{W}(\text{\tiny\textbf{t}}_{\rightarrow},1)=\mathrm{W}(\text{\tiny\textbf{t}}_{\leftarrow},1)=\mathrm{W}(\text{\tiny\textbf{t}}_{\rightarrow},1)=\mathrm{W}(\text{\tiny\textbf{t}}_{\leftarrow},1)=\mathrm{W}(\text{\tiny\textbf{t}}_{\leftarrow},1)=\mathrm{W}(\text{\tiny\textbf{t}}_{\rightarrow},1)=\mathrm{W}(\text{\tiny\textbf{t}}_{\rightarrow},1)=1$$

in order to count all odd-order DASASMs as was done in [BFK17], then we may choose $\alpha_L=\alpha_R=\delta_L=\delta_R=1$ and $\beta_L=\beta_R=\gamma_L=\gamma_R=\sigma(q)$. Here, the left boundary weight in row i is divisible by $qu_i+\bar{q}\bar{u}_i$, while the right boundary weight is divisible by $q\bar{u}_i+\bar{q}u_i$. Thus we may divide this specialization by

$$\prod_{i=1}^{n}\frac{\sigma(q)^2(qu_i+\bar{q}\bar{u}_i)(q\bar{u}_i+\bar{q}u_i)}{\sigma(q^2)^2}$$

and still obtain a Laurent polynomial in $u_1,u_2,\dots,u_{n+1}$. (Alternatively, this normalization could be achieved by using certain choices for the functions $f(u)$ and $g(u)$ in Theorem 3.2.) This normalization was used in [BFK17].

4. Characterization of the partition function

4.1. **Some properties of the partition function.** One of the main reasons for using the vertex weights as given in Table 1 is that this choice ensures the symmetry of $Z_n(u_1,\dots,u_n;u_{n+1})$ in $u_1,\dots,u_n$ as discussed next. Here we rely heavily on previous work that is presented in [BFK17]. At the end of the previous section (see Subsection 3.3.4) we have shown that the weights in Table 1 are (up to an irrelevant factor) generalizations of the weights used in [BFK17]. In [BFK17, Proposition 12] it was demonstrated how these more special weights imply the symmetry of the partition function. However, this proof of symmetry relies only on the properties of the weights given in Theorems 3.1 and 3.2, and since these properties also hold for the more general weights in Table 1, the symmetry follows also in this general setting. By Lemma 3.3, we then have symmetry also for the two refined partition functions.

Theorem 4.1 (Symmetry)**.** *The partition function $Z_n(u_1,\dots,u_n;u_{n+1})$, and its two refinements $Z_n^{\uparrow},Z_n^{\downarrow}$ are symmetric in $u_1,u_2,\dots,u_n$.*

Moreover, we have the following invariance.

Proposition 4.2. *The partition function $Z_n(u_1,\dots,u_n;u_{n+1})$ and its two refinements $Z_n^{\uparrow},Z_n^{\downarrow}$ are invariant when simultaneously replacing $(u_1,\dots,u_{n+1})$ with $(\bar{u}_1,\dots,\bar{u}_{n+1})$ and interchanging left and right boundary constants, i.e., $\alpha_L\leftrightarrow\alpha_R,\beta_L\leftrightarrow\beta_R,\gamma_L\leftrightarrow\gamma_R,\delta_L\leftrightarrow\delta_R$.*

Proof. This follows from reflecting the configuration in the vertical symmetry axis as the reflection causes for each individual vertex the replacement of the label by its reciprocal and, for boundary weights, the interchanging of respective left and right boundary constants (which is precisely the fact displayed at the third bullet point after Table 1). □

Finally, $Z_n,Z_n^{\uparrow},Z_n^{\downarrow}$ are Laurent polynomials in $u_1,u_2,\dots,u_{n+1}$ that are even in each u_i, $i=1,\dots,n$. We need the following notion: Suppose $\sum_{i=o}^{d}a_iu^i$ is a Laurent polynomial in u, and $a_o\neq 0,a_d\neq 0$. Then d is the *degree* of the Laurent polynomial and o is its *order*.

Proposition 4.3. (1) *For each $i = 1, 2, \dots, n$, the partition function $Z_n(u_1, \dots, u_n; u_{n+1})$ and its two refinements $Z_n^{\uparrow}, Z_n^{\downarrow}$ are even in u_i.*

(2) *The partition function $Z_n(u_1, \dots, u_n; u_{n+1})$ and its two refinements $Z_n^{\uparrow}, Z_n^{\downarrow}$ are Laurent polynomials in $u_1, \dots, u_{n+1}$ of degree at most n and order at least $-n$ in u_{n+1}, and of degree at most $2n+2$ and order at least $-2n-2$ in u_i, for each $i = 1, 2, \dots, n$.*

Proof. (1)*:* By Theorem 4.1, it suffices to show the assertion for $i = 1$.

We show that the contribution of each configuration to the partition function is even in u_1. Distinguish between the cases whether or not the unique 1 in the top row of the DASASM is on the (left or right) boundary. Clearly, only the weights of the top bulk vertices and the two top boundary vertices can involve the spectral parameter u_1, and if the 1 is on the left boundary, then the contribution of the first row to the weight is

$$\frac{\beta_L\, q u_1 + \gamma_L\, \bar{q}\bar{u}_1}{\sigma(q^2)} \frac{\delta_R \sigma(q^2 \bar{u}_1^2)}{\sigma(q^2)} \frac{\sigma(q^2 \bar{u}_1 \bar{u}_{n+1})}{\sigma(q^4)} \prod_{i=2}^{n} \frac{\sigma(q^2 \bar{u}_1 \bar{u}_i)^2}{\sigma(q^4)^2},$$

while the contribution is

$$\frac{\delta_L \sigma(q^2 u_1^2)}{\sigma(q^2)} \frac{\beta_R q \bar{u}_1 + \gamma_R \bar{q} u_1}{\sigma(q^2)} \frac{\sigma(q^2 u_1 u_{n+1})}{\sigma(q^4)} \prod_{i=2}^{n} \frac{\sigma(q^2 u_1 u_i)^2}{\sigma(q^4)^2},$$

if the 1 is on the right boundary. Both expressions are obviously even in u_1. If the unique 1 in the top row is not on the boundary, then the contribution of the top bulk vertices and the two top boundary vertices is the product of $\frac{\delta_L \sigma(q^2 u_1^2)}{\sigma(q^2)} \frac{\delta_R \sigma(q^2 \bar{u}_1^2)}{\sigma(q^2)}$ and an even number ($= 2n-2$) of $\frac{\sigma(q^2 u_1 u_i)}{\sigma(q^4)}$'s and $\frac{\sigma(q^2 \bar{u}_1 \bar{u}_i)}{\sigma(q^4)}$'s, $i = 2, 3, \dots, n+1$, and this product is also even in u_1.

(2)*:* The bounds for the degree and order in u_i, $i = 1, 2, \dots, n$, follow from the discussion in the proof of (1). As for the degree and order in u_{n+1}, note that there are precisely n vertices of $\mathcal{T}_n$ whose weight can involve u_{n+1} (i.e., the bulk vertices of the central column). The degree of the weight in u_{n+1} of such a vertex is at most 1 and the order is at least -1. □

4.2. **Characterization through evaluations in u_{n+1}.** In the following lemma we show that the evaluation of the universal partition function $Z_n(u_1, \dots, u_n; u_{n+1})$ at $u_{n+1} = q^2 \bar{u}_1$ is expressible in terms of the order $n-1$ universal partition function.

Lemma 4.4. *For any $n = 1, 2, 3, \dots$,*

$$\begin{aligned} &Z_n(u_1, \dots, u_n; q^2 \bar{u}_1) \\ &\quad = \frac{1}{2} \Big\{ \big[\mathrm{W}(\text{⤢}, u_1) + \mathrm{W}(\text{⤢}, u_1) + \mathrm{W}(\text{⤢}, u_1) + \mathrm{W}(\text{⤢}, u_1) \big] Z_{n-1}(u_2, \dots, u_n; u_1) \\ &\qquad + (-1)^{n+1} \big[\mathrm{W}(\text{⤢}, u_1) + \mathrm{W}(\text{⤢}, u_1) - \mathrm{W}(\text{⤢}, u_1) - \mathrm{W}(\text{⤢}, u_1) \big] Z_{n-1}(u_2, \dots, u_n; -u_1) \Big\} \Omega_n, \end{aligned} \tag{4.1}$$

where

$$\Omega_n = \mathrm{W}(\text{⤡}, u_1) \prod_{i=2}^{n} \mathrm{W}(\text{⤢}, u_1 u_i)\, \mathrm{W}(\text{⤢}, q^2 \bar{u}_1 u_i).$$

Concerning the two refinements, we have

$$Z_n^{\uparrow}(u_1, \dots, u_n; q^2 \bar{u}_1) = \Big(\mathrm{W}(\text{⤢}, u_1) Z_{n-1}^{\uparrow}(u_2, \dots, u_n; u_1) + \mathrm{W}(\text{⤢}, u_1) Z_{n-1}^{\downarrow}(u_2, \dots, u_n; u_1) \Big) \Omega_n, \tag{4.2}$$

$$Z_n^{\downarrow}(u_1, \dots, u_n; q^2 \bar{u}_1) = \Big(\mathrm{W}(\text{⤢}, u_1) Z_{n-1}^{\uparrow}(u_2, \dots, u_n; u_1) + \mathrm{W}(\text{⤢}, u_1) Z_{n-1}^{\downarrow}(u_2, \dots, u_n; u_1) \Big) \Omega_n. \tag{4.3}$$

Proof. We prove (4.2) and illustrate the proof with the help of the case $n = 4$. By definition, the left-hand side is the generating function of the following graph where $u_{n+1} = q^2\bar{u}_1$.

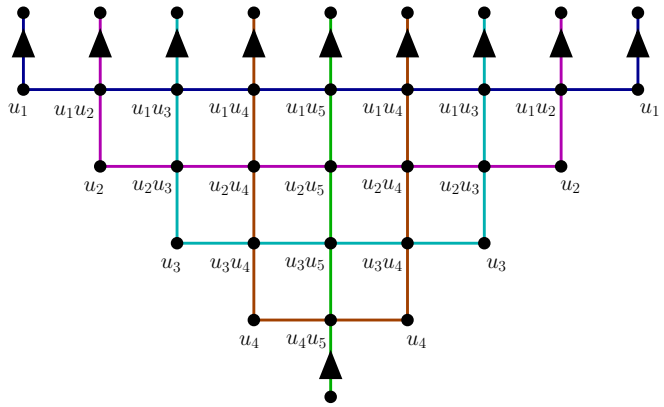

The label of the top bulk vertex in the central column is $u_1u_{n+1} = q^2$. Using (3.6) at this vertex and observing that the local configurations in the left half of the top row are now forced, we see that this is equal to the generating function of the following graph.

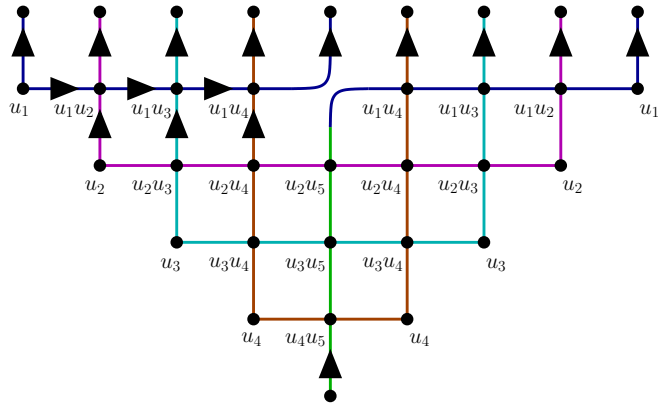

The n vertices with fixed local configuration in the left half of the top row contribute

$$\mathrm{W}(\text{\raisebox{1.5pt}{\scriptsize\rotatebox{-45}{$\blacktriangleright$}}}, u_1)\prod_{i=2}^{n}\mathrm{W}(\text{\raisebox{1.5pt}{\scriptsize\rotatebox{-45}{$\blacktriangleright$}}}, u_1u_i)$$

to the weight. We delete these vertices and move the right half of the graph down.

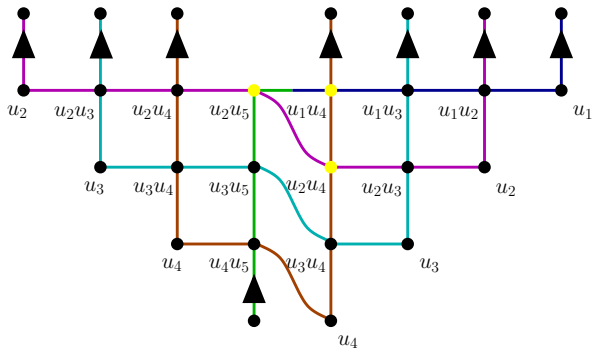

Now we apply the Yang–Baxter equation (3.1) to the vertices with label u_2u_{n+1}, u_1u_n and to the right vertex with label u_2u_n (indicated with yellow in our example). This is permissible since $u_{n+1} = q^2\bar{u}_1$.

We repeatedly apply the Yang–Baxter equation until we reach the right boundary, and then apply the right reflection equation (3.3). We then untangle the crossing and gain the factor $\mathrm{W}(\text{✢}, u_2u_{n+1}) = \mathrm{W}(\text{✢}, u_2u_{n+1}) = \mathrm{W}_2$. In our example, the procedure is as follows.

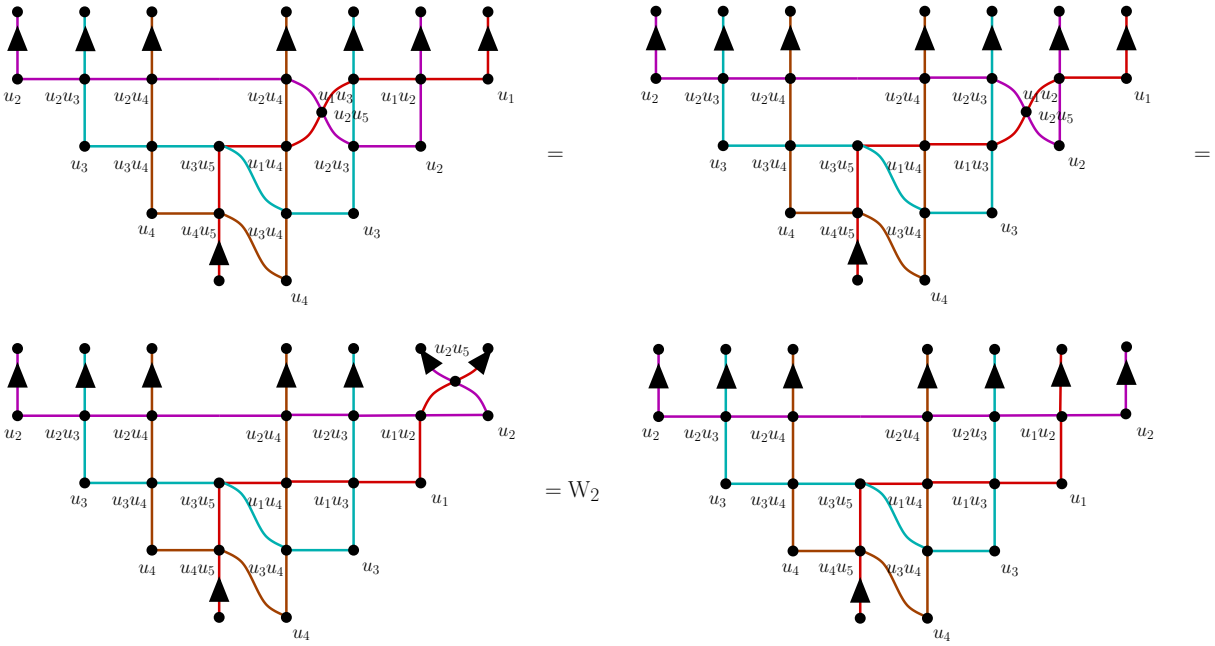

Next we apply the Yang–Baxter equation (3.1) to the vertices with label u_3u_{n+1}, u_1u_n and to the right vertex with label u_3u_n and, with repeated applications of (3.1), move to the right as much as possible—unless this triangle is already at the right boundary. We then use the right reflection equation (3.3) and afterwards the Yang–Baxter equation until we reach the top. We untangle and gain the factor $\mathrm{W}(\text{✢}, u_3u_{n+1}) = \mathrm{W}(\text{✢}, u_3u_{n+1}) = \mathrm{W}_3$. In our example, we perform the following.

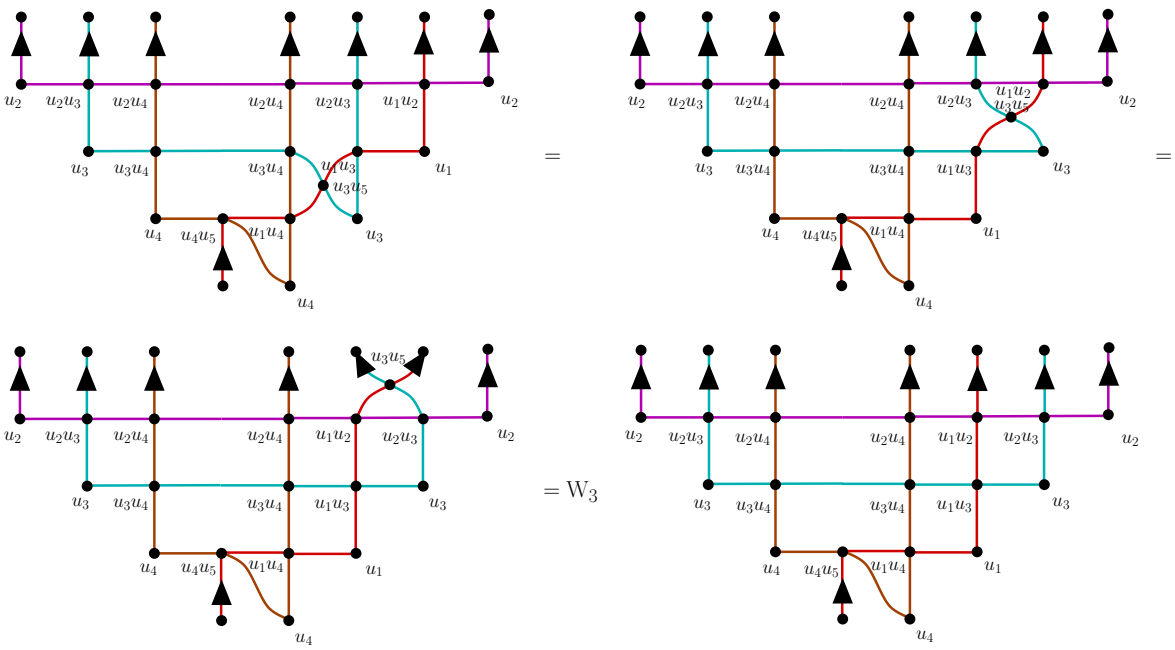

We continue in this manner and obtain in total the factor $\prod_{i=2}^{n} \mathrm{W}(\cdots, u_i u_{n+1})$. In our example, we still need to apply the following steps:

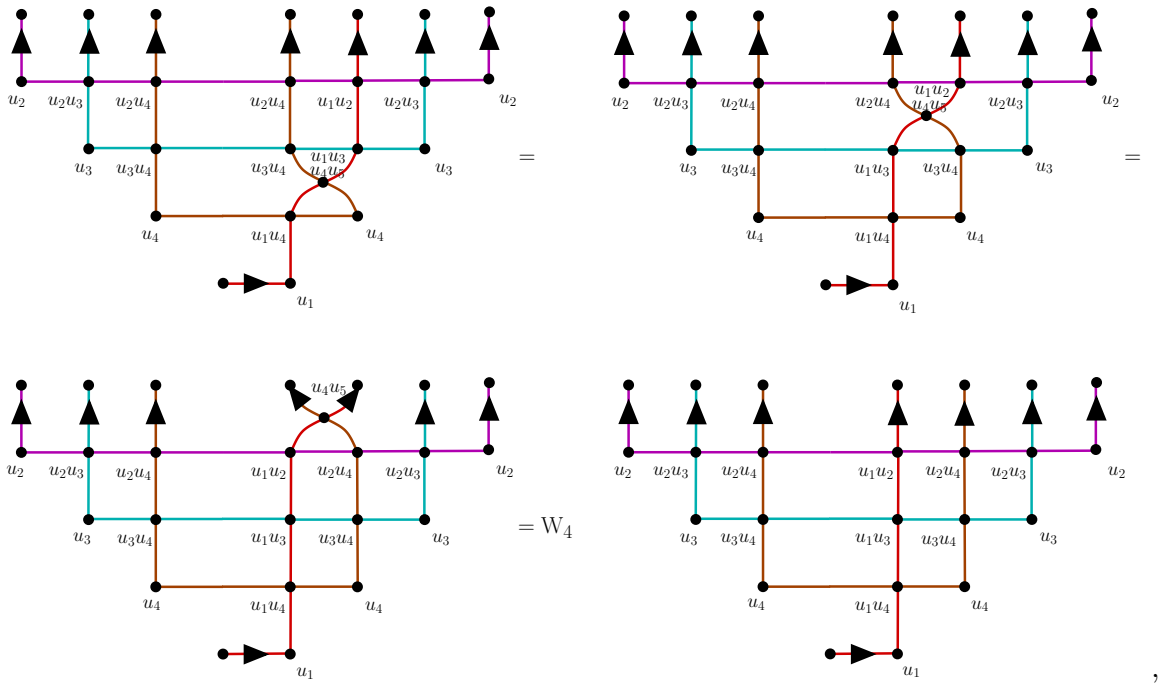

where $\mathrm{W}(\cdots, u_4 u_{n+1}) = \mathrm{W}(\cdots, u_4 u_{n+1}) = \mathrm{W}_4$. The generating function of the resulting graph can be expressed as

$$\mathrm{W}(\cdots, u_1) Z^{\uparrow}_{n-1}(u_2, \dots, u_n; u_1) + \mathrm{W}(\cdots, u_1) Z^{\downarrow}_{n-1}(u_2, \dots, u_n; u_1).$$

The proof of (4.3) is analogous, and (4.1) then follows from (4.2) and (4.3) using Lemma 3.3. □

Remark 4.5. In [BFK17, Proposition 15], we have shown the following identity for the DASASM specialization of the order n partition function.

$$\begin{aligned} Z_n(u_1, \dots, u_n; q^2 \bar{u}_1) = \Big(& (\mathrm{W}(\cdots, u_1) + \mathrm{W}(\cdots, u_1)) Z^{\uparrow}_{n-1}(u_2, \dots, u_n; u_1) \\ & + (\mathrm{W}(\cdots, u_1) + \mathrm{W}(\cdots, u_1)) Z^{\downarrow}_{n-1}(u_2, \dots, u_n; u_1) \Big) \, \Omega_n \end{aligned} \tag{4.4}$$

The proof is based on (3.6), (3.1) and (3.3), and can thus be generalized to our more general weights. The identity is equivalent to Lemma 4.4, due to Lemma 3.3.

Theorem 4.6. *A sequence of Laurent polynomials $\widehat{Z}_n(u_1, \dots, u_n; u_{n+1})$, $n \geq 1$, in u_{n+1} over the field $\mathbb{C}(q, u_1, \dots, u_n, \alpha_L, \beta_L, \gamma_L, \delta_L, \alpha_R, \beta_R, \gamma_R, \delta_R)$ is equal to the sequence of partition functions $Z_n(u_1, \dots, u_n; u_{n+1})$ if and only if $\widehat{Z}_1(u_1; u_2) = Z_1(u_1; u_2)$, and the following conditions are satisfied for $n > 1$.*

1. *The degree of $\widehat{Z}_n(u_1, \dots, u_n; u_{n+1})$ in u_{n+1} is no greater than n and the order is no smaller than $-n$.*
2. *$\widehat{Z}_n(u_1, \dots, u_n; u_{n+1})$ is symmetric in $u_1, \dots, u_n$.*
3. *$\widehat{Z}_n(u_1, \dots, u_n; u_{n+1})$ is invariant when simultaneously replacing $(u_1, \dots, u_{n+1})$ with $(\bar{u}_1, \dots, \bar{u}_{n+1})$ and interchanging left and right boundary constants.*
4. *$\widehat{Z}_n(u_1, \dots, u_n; u_{n+1})$ is even in u_i, for all $i = 1, 2, \dots, n$.*
5. *$\widehat{Z}_n(u_1, \dots, u_n; u_{n+1})$ satisfies the identity obtained from (4.1) by replacing Z_n with $\widehat{Z}_n$ on the left-hand side, and Z_{n-1} with $\widehat{Z}_{n-1}$ on the right-hand side.*

Analogous characterizations for $Z_n^{\uparrow}(u_1,\dots,u_n;u_{n+1})$ and $Z_n^{\downarrow}(u_1,\dots,u_n;u_{n+1})$ are obtained by replacing (4.1) in (5) with (4.2) and (4.3), respectively.

Proof. By Theorem 4.1, Proposition 4.2, Proposition 4.3 and Lemma 4.4, the partition function $Z_n(u_1,\dots,u_n;u_{n+1})$ has all the properties listed for $\widehat{Z}_n(u_1,\dots,u_n;u_{n+1})$ in the statement. We show by induction with respect to n that $\widehat{Z}_n(u_1,\dots,u_n;u_{n+1})$ is uniquely determined by these properties. For $n=1$ this is true by assumption, and we assume $n>1$ in the following.

We consider $\widehat{Z}_n(u_1,\dots,u_n;u_{n+1})$ as Laurent polynomials in u_{n+1}, and, by (1), it suffices to find $2n+1$ evaluations. Now one evaluation (at $u_{n+1}=q^2\bar{u}_1$) is given by (5). Using (4) and (5), as well as the facts that $\mathrm{W}(\rightarrow\!\!\uparrow,u_1),\mathrm{W}(\leftarrow\!\!\downarrow,u_1)$ are odd in u_1, while $\mathrm{W}(\rightarrow\!\!\downarrow,u_1),\mathrm{W}(\leftarrow\!\!\uparrow,u_1),\Omega_n$ are even, we obtain an evaluation at $u_{n+1}=-q^2\bar{u}_1$ as follows.

$$\begin{aligned}
&\widehat{Z}_n(u_1,u_2,\dots,u_n;-q^2\bar{u}_1)\\
&\quad\overset{(4)}{=}\widehat{Z}_n(-u_1,u_2\dots,u_n;-q^2\bar{u}_1)\\
&\quad\overset{(5)}{=}\frac{1}{2}\Big\{\big[-\mathrm{W}(\rightarrow\!\!\uparrow,u_1)+\mathrm{W}(\leftarrow\!\!\uparrow,u_1)+\mathrm{W}(\rightarrow\!\!\downarrow,u_1)-\mathrm{W}(\leftarrow\!\!\downarrow,u_1)\big]\,\widehat{Z}_{n-1}(u_2,\dots,u_n;-u_1)\\
&\qquad+(-1)^{n+1}\big[-\mathrm{W}(\rightarrow\!\!\uparrow,u_1)+\mathrm{W}(\leftarrow\!\!\uparrow,u_1)-\mathrm{W}(\rightarrow\!\!\downarrow,u_1)+\mathrm{W}(\leftarrow\!\!\downarrow,u_1)\big]\,\widehat{Z}_{n-1}(u_2,\dots,u_n;u_1)\Big\}\,\Omega_n.
\end{aligned}\tag{4.5}$$

Using (3), we also obtain evaluations at $u_{n+1}=\pm\bar{q}^2\bar{u}_1$ as follows.

$$\begin{aligned}
&\widehat{Z}_n(u_1,\dots,u_n;\pm\bar{q}^2\bar{u}_1)\\
&\quad\overset{(3)}{=}\widehat{Z}_n(\bar{u}_1,\dots,\bar{u}_n;\pm q^2u_1)_{L\leftrightarrow R}\\
&\quad\overset{(5),(4.5),(3)}{=}\frac{1}{2}\Big\{\big[\pm\mathrm{W}(\uparrow\!\!\leftarrow,u_1)+\mathrm{W}(\uparrow\!\!\rightarrow,u_1)+\mathrm{W}(\downarrow\!\!\leftarrow,u_1)\pm\mathrm{W}(\downarrow\!\!\rightarrow,u_1)\big]\,\widehat{Z}_{n-1}(u_2,\dots,u_n;\pm u_1)\\
&\qquad+(-1)^{n+1}\big[\pm\mathrm{W}(\uparrow\!\!\leftarrow,u_1)+\mathrm{W}(\uparrow\!\!\rightarrow,u_1)-\mathrm{W}(\downarrow\!\!\leftarrow,u_1)\mp\mathrm{W}(\downarrow\!\!\rightarrow,u_1)\big]\,\widehat{Z}_{n-1}(u_2,\dots,u_n;\mp u_1)\Big\}\\
&\qquad\times\mathrm{W}(\leftarrow\!\!\uparrow,u_1)\prod_{i=2}^{n}\mathrm{W}(\leftarrow\!\!\uparrow\!\!\leftarrow,u_1u_i)\,\mathrm{W}(\leftarrow\!\!\uparrow\!\!\leftarrow,\bar{q}^2\bar{u}_1u_i)
\end{aligned}$$

By the symmetry in $u_1,\dots,u_n$, u_1 can be replaced by any u_i, $i=2,3,\dots,n$, and so we have in total $4n$ evaluations in u_{n+1}, namely at $u_{n+1}=\pm q^{\pm 2}\bar{u}_i$, $i=1,2,\dots,n$. All these evaluations are uniquely determined as $\widehat{Z}_{n-1}(u_2,\dots,u_n;u_1)$ is uniquely determined by the induction hypothesis.

The proofs for $Z_n^{\uparrow}$ and $Z_n^{\downarrow}$ are similar. □

4.3. **Characterization through evaluations in u_1.** This section provides preparations for alternative proofs of some results that avoid Lemma 4.4, and it can therefore also be omitted when reading the article.

Lemma 4.7. *Let n be a positive integer. For $u_1=q,iq$,*

$$Z_n(u_1,\dots,u_n;u_{n+1})=\mathrm{W}(\uparrow\!\!\rightarrow,u_1)\,\mathrm{W}(\rightarrow\!\!\uparrow,u_1)\,\mathrm{W}(\rightarrow\!\!\uparrow\!\!\rightarrow,u_1u_{n+1})\prod_{j=2}^{n}\mathrm{W}(\rightarrow\!\!\uparrow\!\!\rightarrow,u_1u_j)^2Z_{n-1}(u_2,\dots,u_n;u_{n+1}).\tag{4.6}$$

The corresponding identities also hold for the refined partition functions $Z_n^{\uparrow},Z_n^{\downarrow}$.

Proof. The possible local configurations for the top right boundary vertex are $\rightarrow\!\!\uparrow$ and $\leftarrow\!\!\uparrow$. However, as $\mathrm{W}(\leftarrow\!\!\uparrow,q)=\mathrm{W}(\leftarrow\!\!\uparrow,iq)=0$, this local configuration must be $\rightarrow\!\!\uparrow$, which causes a fixing of the top row. More precisely, the local configurations of the top bulk vertices are $\rightarrow\!\!\uparrow\!\!\rightarrow$, and $\uparrow\!\!\rightarrow$ for the top left boundary vertex. □

Lemma 4.8. *Let $n > 1$. For $u_1 = q^2\bar{u}_2$,*

$$Z_n(u_1,\dots,u_n;u_{n+1}) = (\mathrm{W}(\text{⇄}, u_1)\,\mathrm{W}(\text{⇄}, u_2) + \mathrm{W}(\text{⇄}, u_1)\,\mathrm{W}(\text{⇄}, u_2))\,\mathrm{W}(\text{⇄}, u_1)\,\mathrm{W}(\text{⇄}, u_2)$$
$$\mathrm{W}(\text{⇄}, u_1u_{n+1})\,\mathrm{W}(\text{⇄}, u_2u_{n+1})\prod_{j=3}^{n}\mathrm{W}(\text{⇄}, u_1u_j)^2\,\mathrm{W}(\text{⇄}, u_2u_j)^2 Z_{n-2}(u_3,\dots,u_n;u_{n+1}). \quad (4.7)$$

The corresponding identities also hold for the refined partition functions $Z_n^{\uparrow}, Z_n^{\downarrow}$.

Proof. This identity appeared before for the DASASM specialization of the universal partition function in [BFK17, Proposition 14]. The proof is based on (3.6) and (3.7), and since these rules are also valid for our more general weights, (4.7) is true in general. □

Theorem 4.9. *Let p, q be indeterminates. Suppose we consider a specialization of $Z_n(u_1,\dots,u_n;u_{n+1})$ where $u_{n+1} = p$ and $\alpha_L, \beta_L, \gamma_L, \delta_L, \alpha_R, \beta_R, \gamma_R, \delta_R \in \mathbb{C}(p,q)$ such that*

- *$Z_n(u_1,\dots,u_n;u_{n+1})$ has a zero at $u_1 = \bar{p}q^2$, and*
- *left boundary constants are transformed into corresponding right boundary constants when replacing p by $\bar{p}$.*

A sequence of Laurent polynomials $\widehat{Z}_n(u_1,\dots,u_n)$, $n \geq 1$, in the variables $u_1,\dots,u_n$ with coefficients in $\mathbb{C}(p,q)$ is equal to the above mentioned sequence of specializations of partition functions $Z_n(u_1,\dots,u_n;u_{n+1})$ if and only if the sequences agree for $n = 1, 2$ and the following conditions are satisfied for $n > 2$.

(1) *The degree of $\widehat{Z}_n(u_1,\dots,u_n)$ in u_1 is no greater than $2n+2$ and the order is no smaller than $-2n-2$.*
(2) *$\widehat{Z}_n(u_1,\dots,u_n)$ is symmetric in $u_1,\dots,u_n$.*
(3) *$\widehat{Z}_n(u_1,\dots,u_n)$ is invariant under the transformation $(u_1,\dots,u_n,p) \mapsto (\bar{u}_1,\dots,\bar{u}_n,\bar{p})$.*
(4) *$\widehat{Z}_n(u_1,\dots,u_n)$ is even in u_i, for all $i = 1,2,\dots,n$.*
(5) *$\widehat{Z}_n(u_1,\dots,u_n)$ satisfies the identities obtained from (4.6) and (4.7) by replacing on the left-hand sides $Z_n(u_1,\dots,u_n;u_{n+1})$ by $\widehat{Z}_n(u_1,\dots,u_n)$, replacing on the right-hand side of (4.6) $Z_{n-1}(u_2,\dots,u_n;u_{n+1})$ by $\widehat{Z}_{n-1}(u_2,\dots,u_n)$, replacing on the right-hand side of (4.7) $Z_{n-2}(u_3,\dots,u_n;u_{n+1})$ by $\widehat{Z}_{n-2}(u_3,\dots,u_n)$ and considering the same specializations of the boundary constants and u_{n+1} on the right-hand sides.*
(6) *$\widehat{Z}_n(u_1,\dots,u_n)$ has a zero at $u_1 = \bar{p}q^2$.*

Analogous characterizations for $Z_n^{\uparrow}(u_1,\dots,u_n;u_{n+1})$ and $Z_n^{\downarrow}(u_1,\dots,u_n;u_{n+1})$ are obtained by replacing (4.6) and (4.7) with the respective identities.

Proof. The partition function $Z_n(u_1,\dots,u_n;u_{n+1})$ satisfies properties (1)–(5) by Proposition 4.3, Theorem 4.1, Proposition 4.2, and Lemmas 4.7 and 4.8, and property (6) by assumption.

An even Laurent polynomial of degree at most $2n+2$ and order at least $-2n-2$ is uniquely determined by $2n+3$ evaluations where we need to guarantee that there is no pair of evaluations which differ only in sign.

We have $2n-2$ evaluations (at $u_1 = q^{\pm 2}\bar{u}_j$, $j = 2,\dots,n$) if we combine the evaluation obtained from (4.7) with (2) and (3), and 4 evaluations (at $u_1 = q^{\pm 1}, iq^{\pm 1}$) if we combine the two evaluations obtained from (4.6) with (3). The additional evaluation is provided by (6). □

5. Maximal number of −1's: Alternating sign triangles

The main purpose of this section is to provide the proof of Theorem 1.2 and generalizations.

5.1. The AST partition function.

Theorem 5.1. *We have the following determinant formula for the partition function* $Z_n(u_1,\dots,u_n;u_{n+1})_{\mathrm{AST}}$.

$$\frac{\prod_{j=1}^n \sigma(\bar p u_j)\prod_{i=1}^n\prod_{j=1}^{n+1}\sigma(q^2u_iu_j)\sigma(q^2\bar u_i\bar u_j)}{\sigma(q^2)^{2n}\,\sigma(q^4)^{n(n-1)}\prod_{i=1}^n\sigma(u_i\bar u_{n+1})\prod_{1\le i<j\le n}\sigma(u_i\bar u_j)^2}\det_{1\le i,j\le n+1}\left(\begin{cases}\frac{1}{\sigma(q^2u_iu_j)\,\sigma(q^2\bar u_i\bar u_j)}, & i\le n\\ 1-\frac{\sigma(\bar u_{n+1}u_j)}{\sigma(\bar p u_j)}, & i=n+1\end{cases}\right) \tag{5.1}$$

Proof. We use Theorem 4.6. The case $n=1$ is easy to verify. To show that (5.1) is indeed a Laurent polynomial in u_{n+1}, observe that

$$\frac{\prod_{j=1}^n \sigma(\bar p u_j)\prod_{i=1}^n\prod_{j=1}^{n+1}\sigma(q^2u_iu_j)\sigma(q^2\bar u_i\bar u_j)}{\sigma(q^2)^{2n}\,\sigma(q^4)^{n(n-1)}\prod_{1\le i<j\le n}\sigma(u_i\bar u_j)^2}\det_{1\le i,j\le n+1}\left(\begin{cases}\frac{1}{\sigma(q^2u_iu_j)\,\sigma(q^2\bar u_i\bar u_j)}, & i\le n\\ 1-\frac{\sigma(\bar u_{n+1}u_j)}{\sigma(\bar p u_j)}, & i=n+1\end{cases}\right)$$

is a Laurent polynomial in u_{n+1}. It is divisible by $\prod_{i=1}^n\sigma(u_i\bar u_{n+1})$, as the determinant vanishes if we set $u_{n+1}=\pm u_j$, for $j=1,\dots,n$, since then the j-th column coincides with the $(n+1)$-st column of the matrix.[3]

We check that (5.1) has the desired properties from Theorem 4.6.

(1)*:* To deduce the bounds on the degree and order of (5.1) as a Laurent polynomial in u_{n+1}, use the Leibniz formula for the determinant and observe that, after multiplying each summand with the prefactor and cancelling as much as possible, we obtain a sum of rational functions. Each numerator has degree $2n$ or $2n-1$ (depending on whether or not the entry in the bottom right corner of the matrix is involved) and order $-2n$ or $-2n+1$. The denominators have degree n and order $-n$, and since we already know that (5.1) is a Laurent polynomial in u_{n+1}, the bounds follow.

(2), (3) *and* (4)*:* The expression is readily checked to be symmetric in $u_1,\dots,u_n$, and also even in u_i, for each $i\in\{1,2,\dots,n\}$. Moreover, it is invariant under the transformation $(u_1,\dots,u_{n+1},p)\mapsto(\bar u_1,\dots,\bar u_{n+1},\bar p)$. Note that interchanging respective left and right boundary constants in the AST-specialization (see Subsection 3.3.1) is equivalent to the replacement $p\mapsto\bar p$.

(5)*:* Let $X_n(u_1,\dots,u_n;u_{n+1})$ denote (5.1). Then we need to show the following.

$$\begin{aligned}X_n(u_1,\dots,u_n;q^2\bar u_1)=\frac{(q-p\bar q u_1)\sigma(q^2u_1^2)}{2\sigma(q^2)^2}\prod_{i=2}^n\frac{\sigma(q^2u_1u_i)\sigma(q^4\bar u_1u_i)}{\sigma(q^4)^2}\\ \times((\bar u_1+\bar p)(\bar u_1q+u_1\bar q)X_{n-1}(u_2,\dots,u_n;u_1)\\ +(-1)^{n+1}(\bar u_1-\bar p)\sigma(\bar u_1q)X_{n-1}(u_2,\dots,u_n;-u_1))\end{aligned} \tag{5.2}$$

For this purpose, multiply the $(n+1)$-st column of the matrix in $X_n(u_1,\dots,u_n;q^2\bar u_1)$ with the prefactor $\sigma(q^2u_1u_{n+1})\sigma(q^2\bar u_1\bar u_{n+1})$. After taking $u_{n+1}=q^2\bar u_1$, the $(n+1)$-st column is $(1,0,\dots,0)^t$. Now expand the determinant with respect to this column to reduce the computation to the determinant of an $n\times n$

[3]It is also not difficult to see directly that (5.1) is in fact a Laurent polynomial in $u_1,\dots,u_{n+1}$: Observe that

$$\frac{\prod_{j=1}^{n+1} \sigma(\bar p v_j)\prod_{i=1}^n\prod_{j=1}^{n+1}\sigma(q^2u_iv_j)\sigma(q^2\bar u_i\bar v_j)}{\sigma(q^2)^{2n}\,\sigma(q^4)^{n(n-1)}}\det_{1\le i,j\le n+1}\left(\begin{cases}\frac{1}{\sigma(q^2u_iv_j)\,\sigma(q^2\bar u_i\bar v_j)}, & i\le n\\ 1-\frac{\sigma(\bar u_{n+1}v_j)}{\sigma(\bar p v_j)}, & i=n+1\end{cases}\right)$$

is a Laurent polynomial in the variables $u_1,\dots,u_{n+1},v_1,\dots,v_{n+1}$ that is antisymmetric in $u_1,\dots,u_n$ and in $v_1,\dots,v_{n+1}$. It is also even in each u_i, $i=1,\dots,n$, and odd in each v_i, $i=1,2,\dots,n+1$, and thus divisible by $\prod_{1\le i<j\le n}\sigma(u_i\bar u_j)\prod_{1\le i<j\le n+1}\sigma(v_i\bar v_j)$. After setting $v_{n+1}=u_{n+1}$, it is also divisible by $\sigma(\bar p u_{n+1})$, since then the bottom right corner entry of the matrix is 1.

matrix. After moving the first column to the right, note that the first $n-1$ rows of this matrix match those of the matrices in $X_{n-1}(u_2,\dots,u_n;u_1)$ and $X_{n-1}(u_2,\dots,u_n;-u_1)$. Take the linear combination of the last rows in the right-hand side according to the prefactors and compare it with the last row and the prefactor in the left-hand side to see that they are equal. □

5.2. **Specialization of the** AST **partition function at** $u_{n+1}=p$**.** Taking $u_{n+1}\to p$ in (5.1), the last row of the determinant becomes $(0,0,\dots,0,1)$, and we obtain the following simplified formula.

Corollary 5.2. *We have the following formula for* $Z_n(u_1,\dots,u_n;p)_{\mathrm{AST}}$.

$$\frac{\prod_{i=1}^n \sigma(q^2pu_i)\sigma(q^2\bar{p}\bar{u}_i)\prod_{i,j=1}^n \sigma(q^2u_iu_j)\sigma(q^2\bar{u}_i\bar{u}_j)}{\sigma(q^2)^{2n}\,\sigma(q^4)^{n(n-1)}\prod_{1\le i<j\le n}\sigma(u_i\bar{u}_j)^2}\det_{1\le i,j\le n}\left(\frac{1}{\sigma(q^2u_iu_j)\,\sigma(q^2\bar{u}_i\bar{u}_j)}\right) \tag{5.3}$$

Next we provide a sketch of an alternative proof of Corollary 5.2 which avoids Theorem 5.1 and Lemma 4.4, the latter being probably the most complicated ingredient in the proof of Theorem 5.1. This proof is also more in line with Kuperberg's approach in [Kup02] as it uses a characterization of the partition function in terms of evaluations in u_1.

Sketch of an alternative proof using Theorem 4.9. First we need to verify that

$$Z_n(\bar{p}q^2,u_2,\dots,u_n;p)_{\mathrm{AST}}=0.$$

By the symmetry of Theorem 4.1, it suffices to show that $Z_n(u_1,\dots,u_{n-1},\bar{p}q^2;p)_{\mathrm{AST}}=0$.

Consider the bottom bulk vertex v in the central column and assume $u_n=\bar{p}q^2, u_{n+1}=p$. Its label is $u_nu_{n+1}=q^2$, and using (3.6), there are only four possible local configurations around v that contribute a non-zero weight (which is in fact 1 in all cases). Moreover, as $\mathrm{W}(\rightarrow\!\downarrow,u_n)=\mathrm{W}(\leftarrow\!\downarrow,u_n)=0$, there are only two possibilities (namely $\rightarrow\!\uparrow,\leftarrow\!\uparrow$) for the right boundary vertex v_R adjacent to v.

It turns out that the weights of the remaining configurations cancel in pairs: Fix a configuration and obtain another configuration by reversing the orientation of the bottom vertical edge incident with v and the right horizontal edge incident with v. Then only the weight of v_R has changed: It is $\frac{\sigma(\bar{p}^2q^2)}{\sigma(q^2)}$ if the horizontal edge points to the right, and it is $-\frac{\sigma(\bar{p}^2q^2)}{\sigma(q^2)}$ if the horizontal edge points to the left.

Now we may use Theorem 4.9. The cases $n=1,2$ are easy to verify. To show that (5.3) is a Laurent polynomial in $u_1,\dots,u_n$, proceed as in the footnote of the proof of Theorem 5.1.

(1)*:* We use the Leibniz rule for the determinant in (5.3). The degree and order of the numerator in u_1 of each summand—after multiplication with the prefactor and cancelling—are $4n-2$ and $-4n+2$, respectively, while the degree and order of the denominator are $2n-2$ and $-2n+2$, respectively.

(2),(3),(4), (5) *and* (6)*:* The expression is symmetric in $u_1,\dots,u_n$, invariant under the transformation $(u_1,\dots,u_n,p)\mapsto(\bar{u}_1,\dots,\bar{u}_n,\bar{p})$, and even in u_i, $i=1,2,\dots,n$. The identities obtained from Lemmas 4.6 and 4.7 can be verified straightforwardly. It is also evident that the expression in (5.3) has a zero at $u_1=\bar{p}q^2$. □

A comparison with the partition function of all ASMs shows a close relation to the AST partition function at $u_{n+1}=p$: Let $Y_n(u_1,\dots,u_n;v_1,\dots,v_n)$ denote the partition function of $n\times n$ ASMs ($u_1,\dots,u_n$ and $v_1,\dots,v_n$ are the horizontal and vertical spectral parameters, respectively, and we use the bulk weights given in Table 1). Then

$$Y_n(u_1,\dots,u_n;v_1,\dots,v_n)=\frac{\prod_{i,j=1}^n\sigma(q^2u_i\bar{v}_j)\sigma(q^2\bar{u}_iv_j)}{\sigma(q^4)^{n(n-1)}\prod_{1\le i<j\le n}\sigma(u_i\bar{u}_j)\sigma(\bar{v}_iv_j)}\det_{1\le i,j\le n}\left(\frac{1}{\sigma(q^2u_i\bar{v}_j)\sigma(q^2\bar{u}_iv_j)}\right).$$

To see this, consult for instance [Kup02, Theorem 10]: Set $a=q^2$ in Kuperberg's formula and divide by $\sigma(q^4)^{n^2}$ to take the difference in the choice of vertex weights into account. A determinant formula for the partition function of the six-vertex model on an $n\times n$ grid with domain wall boundary conditions

that is equivalent to the one above was first derived by Izergin [Ize87, Eq. (5)], using results of Korepin [Ize87, Kor82]. Corollary 5.2 now implies that

$$Z_n(u_1,\dots,u_n;p)_{\mathrm{AST}} = \prod_{i=1}^{n} \frac{\sigma(q^2pu_i)\sigma(q^2\bar{p}\bar{u}_i)}{\sigma(q^2)^2} Y_n(u_1,\dots,u_n;\bar{u}_1,\dots,\bar{u}_n). \tag{5.4}$$

In particular, (5.4) now implies that there is the same number of order n ASMs as there is of order n ASTs, since $Y_n(1,\dots,1;1,\dots,1)$ is the number of order n ASMs.

5.3. **Specialization of the AST partition function at $u_{n+1}=p$ and $q=e^{\frac{i\pi}{6}}$.** Next we specialize $q=e^{\frac{i\pi}{6}}$ and obtain an expression involving *Schur functions* $s_\lambda(x_1,\dots,x_n)$. We use the well-known determinant formula

$$s_\lambda(x_1,\dots,x_n) = \frac{\det_{1\le i,j\le n}(x_i^{\lambda_j+n-j})}{\prod_{1\le i<j\le n}(x_i-x_j)},$$

where $\lambda=(\lambda_1,\dots,\lambda_n)$, and if the partition has less than n parts, we add the appropriate number of zero parts to the partition.

Theorem 5.3. *We have the following Schur function expression for $Z_n(u_1,\dots,u_n;p)_{\mathrm{AST}}$ at $q=e^{\frac{i\pi}{6}}$.*

$$3^{-\binom{n+1}{2}} \prod_{i=1}^{n} (p^2u_i^2+1+\bar{p}^2\bar{u}_i^2) s_{(n-1,n-1,n-2,n-2,\dots,1,1)}(u_1^2,\bar{u}_1^2,\dots,u_n^2,\bar{u}_n^2) \tag{5.5}$$

Proof. Use (5.3) and [Oka06, Theorem 2.4 (1), 2nd eq.]. We note that the Schur function expression for the ASM partition function at $q=e^{\frac{i\pi}{6}}$ was obtained simultaneously by Okada and by Stroganov [Str06, Eq. (17)]. □

Let us point out that formulas for the specializations of $Z_n(u_1,\dots,u_n;p)_{\mathrm{AST}}$ at $q=e^{\frac{i\pi}{4}},e^{\frac{i\pi}{8}},e^{\frac{i\pi}{12}}$ are also provided in [Oka06, Theorem 2.4 (1)]. These specializations correspond to the x-enumerations of ASMs (or ASTs, see also Subsection 5.7) for $x=0,2,3$, respectively.

Remark 5.4. In [AB19] it is shown that the Schur function in (5.5) factorizes as

$$\begin{aligned} &s_{(2n-1,2n-1,2n-2,2n-2,\dots,1,1)}(u_1,\bar{u}_1,u_2,\bar{u}_2,\dots,u_{2n},\bar{u}_{2n}) \\ &\qquad = sp_{(n-1,n-1,n-2,n-2,\dots,1,1)}(u_1,\dots,u_{2n})\, o^{\mathrm{even}}_{(n,n,n-1,n-1,\dots,1,1)}(u_1,\dots,u_{2n}), \\ &s_{(2n,2n,2n-1,2n-1,\dots,1,1)}(u_1,\bar{u}_1,u_2,\bar{u}_2,\dots,u_{2n+1},\bar{u}_{2n+1}) \\ &\qquad = so_{(n,n,n-1,n-1,\dots,1,1)}(u_1,\dots,u_{2n+1})\, so_{(n,n,n-1,n-1,\dots,1,1)}(-u_1,\dots,-u_{2n+1}), \end{aligned} \tag{5.6}$$

where the notation so and o^{even} for the orthogonal characters is the same as that used in [CK09]. These factorizations are very similar to those obtained by Ciucu and Krattenthaler in that paper.

5.4. **Inversion numbers: A generalization of Theorem 1.2.** The inversion number of an order n ASM $A=(a_{i,j})$ is defined as

$$\mathrm{inv}(A) = \sum_{1\le i'<i\le n, 1\le j'\le j\le n} a_{i'j}a_{ij'}.$$

If A is a permutation matrix, $\mathrm{inv}(A)$ is the number of inversions of the permutation $\pi=(\pi_1,\dots,\pi_n)$, where π_i is the column for the unique 1 in row i. The inversion number of ASMs was first defined in [RR86, Eq. (18)], where it was referred to as the number of positive inversions. Another generalization of the inversion number of permutations is obtained if, instead of summing over all $1\le j'\le j\le n$,

we sum over all $1 \leq j' < j \leq n$, and this statistic, which in fact evaluates to $\mathrm{inv}(A) + \mu(A)$, appeared in [MRR83, p. 344]. In terms of the six-vertex model, we have

$$\mathrm{inv}(A) = \#\text{} \in \mathrm{C}(A),$$

where $\mathrm{C}(A)$ denotes the six-vertex configuration of A. This is because

$$\mathrm{inv}(A) = \sum_{i,j=1}^{n} \left(\sum_{1 \leq i' < i} a_{i'j} \right) \left(\sum_{1 \leq j' \leq j} a_{ij'} \right),$$

i.e., $\mathrm{inv}(A)$ is the number of entries $a_{i,j}$ of A such that the sum of entries in the same column above $a_{i,j}$ (not including $a_{i,j}$) is 1 and the sum of entries in the same row to the left of $a_{i,j}$ (including $a_{i,j}$) is 1.

It is not hard to see that also $\mathrm{inv}(A) = \sum_{1 \leq i \leq i' \leq n, 1 \leq j < j' \leq n} a_{i'j} a_{ij'}$ or, equivalently, $\mathrm{inv}(A) = \#\text{ } \in \mathrm{C}(A)$. This implies

$$\mathrm{inv}(A) = \frac{1}{2} \left(\#\text{} \in \mathrm{C}(A) + \#\text{} \in \mathrm{C}(A) \right).$$

We generalize this version of the inversion number to ASTs straightforwardly: Suppose $T \in \mathrm{AST}(n)$. Then let

$$\mathrm{inv}_\nabla(T) = \frac{1}{2} \left(\#\text{} \in \mathrm{C}(T) + \#\text{} \in \mathrm{C}(T) \right),$$

where $\mathrm{C}(T)$ is the triangular six-vertex configuration associated with T.

It can be shown (where we leave the details of the derivation to the reader) that the inversion number of $T = (t_{i,j})_{1 \leq i \leq n, i \leq j \leq 2n-i}$ can be written directly in terms of its entries as

$$\mathrm{inv}_\nabla(T) = \sum_{\substack{i' < i \\ j' \leq j}} t_{i'j} t_{ij'} = \sum_{\substack{i' \leq i \\ j' < j}} t_{i'j} t_{ij'} = \sum_{\substack{i' < i \\ j' < j}} t_{i'j} t_{ij'} - \mu_\nabla(T),$$

where the summation is over all i', j, i, j' such that $t_{i'j}$ and $t_{ij'}$ are defined. It follows from these expressions that $\mathrm{inv}_\nabla(T)$ is an integer, while it follows from the definition that $\mathrm{inv}_\nabla(T)$ is non-negative.

Theorem 5.5. *The joint distribution of the statistics μ and* inv *on the set* $\mathrm{ASM}(n)$ *is the same as the joint distribution of the statistics μ_∇ and* inv_∇ *on the set* $\mathrm{AST}(n)$*, i.e., for all integers m and i we have*

$$|\{A \in \mathrm{ASM}(n) \mid \mu(A) = m, \mathrm{inv}(A) = i\}| = |\{T \in \mathrm{AST}(n) \mid \mu_\nabla(T) = m, \mathrm{inv}_\nabla(T) = i\}|.$$

Proof. Define the following complementary inversion numbers for $A \in \mathrm{ASM}(n)$ and $T \in \mathrm{AST}(n)$:

$$\mathrm{inv}'(A) = \frac{1}{2} \left(\#\text{} \in \mathrm{C}(A) + \#\text{} \in \mathrm{C}(A) \right) \qquad \mathrm{inv}'_\nabla(T) = \frac{1}{2} \left(\#\text{} \in \mathrm{C}(T) + \#\text{} \in \mathrm{C}(T) \right)$$

As there are n more 1's in an ASM (resp. AST) of order n than -1's, we have

$$\mu(A) = \binom{n}{2} - \mathrm{inv}(A) - \mathrm{inv}'(A) \quad \text{and} \quad \mu_\nabla(T) = \binom{n}{2} - \mathrm{inv}_\nabla(T) - \mathrm{inv}'_\nabla(T),$$

and so it suffices to show

$$\sum_{A \in \mathrm{ASM}(n)} x^{\mathrm{inv}(A)} y^{\mathrm{inv}'(A)} = \sum_{T \in \mathrm{AST}(n)} x^{\mathrm{inv}_\nabla(T)} y^{\mathrm{inv}'_\nabla(T)}.$$

The left hand side can be studied using the partition function Y_n. Indeed, we have

$$Y_n(p, \ldots, p; \bar{p}, \ldots, \bar{p}) = \sum_{A \in \mathrm{ASM}(n)} \left(\frac{\sigma(q^2 p^2)}{\sigma(q^4)} \right)^{2\,\mathrm{inv}(A)} \left(\frac{\sigma(q^2 \bar{p}^2)}{\sigma(q^4)} \right)^{2\,\mathrm{inv}'(A)}, \tag{5.7}$$

since the (bulk) weights for the ASM partition function $Y_n(u_1,\dots,u_n;v_1,\dots,v_n)$ are chosen as in Table 1 and the label of the vertex in row i and column j is $u_i\bar{v}_j$. Now it is important to note that $\frac{\sigma(q^2p^2)}{\sigma(q^4)}$ and $\frac{\sigma(q^2\bar{p}^2)}{\sigma(q^4)}$ are algebraically independent if p,q are (algebraically independent) indeterminates. Indeed, let $F(x,y)=\sum_{s,t\geq 0}a_{s,t}x^sy^t$ be a polynomial in x,y and d its total degree. Then $F\left(\frac{\sigma(q^2p^2)}{\sigma(q^4)},\frac{\sigma(q^2\bar{p}^2)}{\sigma(q^4)}\right)$ is a Laurent polynomial in p of degree $2d$ with leading coefficient

$$\frac{1}{\sigma(q^4)^d}\sum_{s,t\geq 0,s+t=d}a_{s,t}(-1)^tq^{2s-2t},$$

and thus non-zero.

On the AST side, we consider the specialization $Z_n(p,\dots,p;p)_{\mathrm{AST}}$. By (3.8), the sum in the generating function $Z_n(p,\dots,p;p)_{\mathrm{AST}}$ can be taken over all odd DASASM-triangles T' of order n with $\mathrm{N}_{-1}(T')=n$, and by (3.9), all left boundary weights are $\frac{\sigma(q^2p^2)}{\sigma(q^2)}$, while all right boundary weights are $\frac{\sigma(q^2\bar{p}^2)}{\sigma(q^2)}$. Hence, by Table 1,

$$Z_n(p,\dots,p;p)_{\mathrm{AST}}=\left(\frac{\sigma(q^2p^2)\sigma(q^2\bar{p}^2)}{\sigma(q^2)^2}\right)^n\sum_{T\in\mathrm{AST}(n)}\left(\frac{\sigma(q^2p^2)}{\sigma(q^4)}\right)^{2\,\mathrm{inv}_\nabla(T)}\left(\frac{\sigma(q^2\bar{p}^2)}{\sigma(q^4)}\right)^{2\,\mathrm{inv}'_\nabla(T)},$$

and the assertion now follows from (5.4) and (5.7). □

5.5. **Position of the 1 in the top row of an AST.** A statistic that was extensively studied for ASMs is the position of the 1 in the top row, see for instance [MRR83, Zei96b]. In this subsection, we study the analogous statistic on ASTs and derive a formula for the number of ASTs of order n that have the 1 in the top row in a prescribed position in terms of the doubly refined enumeration of ASMs with respect to the positions of the 1's in the top row and leftmost column. Explicit formulas for this doubly refined enumeration of ASMs can in turn be derived from results in [Str06], see also [Fis11, Fis12, Beh13].

For an AST T, let

$$\kappa_\nabla(T)=(\text{position of the 1 in the top row of } T)-1$$

and, for an ASM A, let

$$\kappa(A)=(\text{position of the 1 in the top row of } A)+(\text{position of the 1 in the first column of } A)-2.$$

We define two generating functions as follows.

$$\mathcal{K}_n^{\mathrm{AST}}(x)=\sum_{T\in\mathrm{AST}(n)}x^{\kappa_\nabla(T)},\qquad \mathcal{K}_n^{\mathrm{ASM}}(x)=\sum_{A\in\mathrm{ASM}(n)}x^{\kappa(A)}$$

For example, $\mathcal{K}_n^{\mathrm{AST}}(x)=2+x+x^2+x^3+2x^4$ and $\mathcal{K}_n^{\mathrm{ASM}}(x)=2+2x^2+2x^3+x^4$. By setting $u_2=\ldots=u_n=1,p=1,q=e^{\frac{i\pi}{6}}$ in (5.4), it can be shown (where we leave the details of the derivation to the reader) that

$$(2-x)x^2\mathcal{K}_n^{\mathrm{AST}}(x)=(x^2-x+1)\mathcal{K}_n^{\mathrm{ASM}}(x)+(1-x)(x^{2n}-1)A_{n-1},$$

where A_n denotes the number of $n\times n$ ASMs. This implies

$$2T_{n,k}=T_{n,k-1}+D_{n,k}-D_{n,k+1}+D_{n,k+2}+(\delta_{k,-1}-\delta_{k,-2}+\delta_{k,2n-2}-\delta_{k,2n-1})A_{n-1},$$

with $T_{n,k} = |\{T \in \mathrm{AST}(n) \mid \kappa_\nabla(T) = k\}|$ and $D_{n,k} = |\{A \in \mathrm{ASM}(n) \mid \kappa(A) = k\}|$. The recursion can be solved and we obtain

$$T_{n,k} = 3\sum_{i=0}^{k-3} 2^{i-k} D_{n,i+3} - \frac{1}{4}D_{n,k+1} + \frac{1}{2}D_{n,k+2} + (2^{-k+1} - \frac{3}{2}\delta_{k,0} - \frac{3}{4}\delta_{k,1} + \frac{1}{2}\delta_{k,2n-2})A_{n-1}.$$

If $B_{n,i,j}$ denotes the number of $n \times n$ ASMs that have the 1 in the top row in column j and the 1 in the leftmost column in row i, then

$$D_{n,k} = \sum_{i+j=k+2} B_{n,i,j}.$$

5.6. **Another interesting** AST **statistic.** Each left or right boundary entry of an AST T is either 0 or 1. Let $\mathrm{L}(1,T)$ denote the number of 1's on the left boundary, and $\mathrm{R}(0_1,T)$ the number of 0's on the right boundary that are contained in a column with sum 1. Define the statistic

$$\rho(T) = \mathrm{L}(1,T) + \mathrm{R}(0_1,T) + 1$$

for $T \in \mathrm{AST}(n)$. We have numerical evidence that, for any integers n and r,

$$|\{A \in \mathrm{AST}(n) \mid \rho(A) = r\}| = |\{A = (a_{i,j}) \in \mathrm{ASM}(n) \mid a_{1,r} = 1\}|.$$

In a forthcoming paper, we will study this statistic and derive related constant term identities. Interestingly, data suggests that the joint distribution of $\mu_\nabla, \mathrm{inv}_\nabla$ and ρ on $\mathrm{AST}(n)$ is not the same as the joint distribution of μ, inv and the position of the unique 1 in the top row of an ASM on $\mathrm{ASM}(n)$.

5.7. **2-enumeration and 3-enumeration of** ASTs**.** The following weighted enumeration of ASMs is referred to as the x-enumeration:

$$\sum_{A \in \mathrm{ASM}(n)} x^{\mu(A)}$$

If $x = 0$, then we obviously obtain $n!$ since ASMs with no -1 are precisely permutation matrices. Besides $x = 0, 1$, the numbers are also round for $x = 2$ (see [MRR83]) and $x = 3$ (see [Kup96]). Theorem 1.2 states that the x-enumeration of ASTs is the same as the x-enumeration of ASMs for any x. Hence we obtain the following.

Corollary 5.6. *The* 2*-enumeration of order* n AST*s is* $2^{\binom{n}{2}}$*, while the* 3*-enumeration of order* $2n+1$ AST*s is*

$$3^{n(n+1)} \prod_{i=1}^{n} \left(\frac{(3i-1)!}{(n+i)!}\right)^2$$

and

$$3^{n(n+2)} \frac{(3n+2)!n!}{(2n+1)!^2} \prod_{i=1}^{n} \left(\frac{(3i-1)!}{(n+i)!}\right)^2$$

for order $2n+2$ AST*s.*

Curiously, as demonstrated in [EKLP92] (see also [Ciu97, Remark 4.3]), the 2-enumeration of ASMs can be translated into the enumeration of *perfect matchings* of certain regions of the square grid (or, equivalently, into the plain enumeration of the domino tilings of the *Aztec diamond*). Similarly, we may now translate our result on the 2-enumeration of ASTs into a matching enumeration result.

In order to do so, define for each integer $n > 0$ a graph $\mathcal{Q}_n$ as indicated in Figure 4 (left). It consists of n rows of centered sequences of tilted squares (shaded in our drawing and referred to as diamonds in the following) of lengths $2n-1, 2n-3, \ldots, 1$, from top to bottom. The bottom vertices of the columns (except for the middle column) play a special role and these vertices are denoted by their column position, counted from the left. Note that $\mathcal{Q}_n$ is bipartite and the vertices $1, 2, \ldots, n-1, n+1, \ldots, 2n-1$ all lie in the same vertex class. There are $n-1$ more vertices in

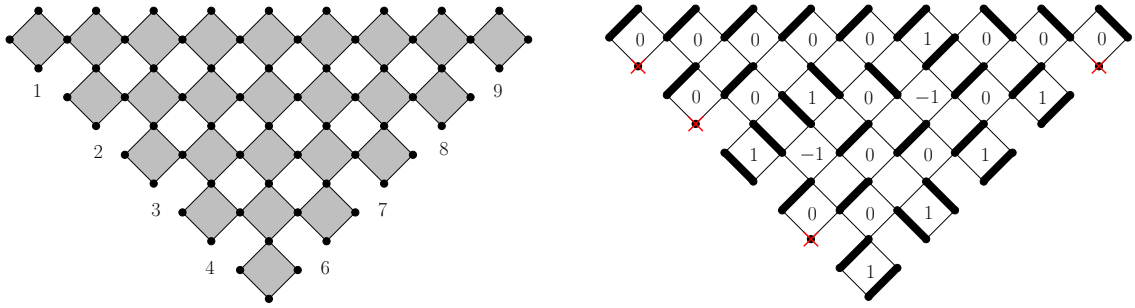

FIGURE 4. $\mathcal{Q}_5$ (left) and an example (right)

this class than in the other class, and hence, in order to obtain a graph that could possibly possess a perfect matching, we may delete $n-1$ vertices in $\{1,2,\dots,n-1,n+1,\dots,2n-1\}$ from $\mathcal{Q}_n$. There is an example of such a perfect matching in Figure 4 (right), where we delete vertices $1,2,4,9$.

Now, on the AST-side, since each of the n rows of an order n AST has sum 1, and each of the $2n-1$ columns has sum 0 or 1, there must be precisely $n-1$ columns that have sum 0. Let $1 \le i_1 < i_2 < \ldots < i_{n-1} \le 2n-1$ and denote by $\mathrm{AST}(n; i_1,\dots,i_{n-1})$ the subset of $\mathrm{AST}(n)$, where the columns with sum 0 are the columns $i_1,\dots,i_{n-1}$. (Note that this set is obviously empty if $i_j = n$ for a j.)

In the example in Figure 4 (right), we indicate a surjection from the set of perfect matchings of $\mathcal{Q}_n - \{i_1,\dots,i_{n-1}\}$ onto $\mathrm{AST}(n; i_1,\dots,i_{n-1})$ (see also [Ciu97, Remark 4.3]): Each diamond corresponds to an entry of the AST, and this entry is in fact the number of matching edges on the boundary of the diamond. To compute the size of the preimage of a given AST under this map, observe that for each 1 of the AST, there are obviously two possibilities to arrange the two matching edges on the boundary of the respective diamond. In summary,

$$\sum_{T\in\mathrm{AST}(n)} 2^{\#\text{ of 1's in }T} = \sum_{\substack{V\subseteq\{1,2,\dots,n-1,n+1,\dots,2n-1\}\\ |V|=n-1}} (\#\text{ of perfect matchings of }\mathcal{Q}_n - V).$$

As $\sum_{T\in\mathrm{AST}(n)} 2^{\#\text{ of 1's in }T} = 2^n \sum_{T\in\mathrm{AST}(n)} 2^{\mu(T)}$, Corollary 5.6 now implies the following.

Corollary 5.7. *For any $n = 1,2,3,\dots$,*

$$\sum_{\substack{V\subseteq\{1,2,\dots,n-1,n+1,\dots,2n-1\}\\ |V|=n-1}} (\#\textit{ of perfect matchings of }\mathcal{Q}_n - V) = 2^{\binom{n+1}{2}}.$$

The number of perfect matchings of a tilted square region of the square grid of order n (dual to the Aztec diamond of order n) is also $2^{\binom{n+1}{2}}$, since the plain enumeration of the perfect matchings of this region is up to the factor 2^n equal to the 2-enumeration of order n ASMs as mentioned above. A bijection between the set of perfect matchings of this region and the set of perfect matchings of the family of graphs $(\mathcal{Q}_n - V)_{V\subseteq\{1,2,\dots,n-1,n+1,\dots,2n-1\}}$ might give a hint on the bijection between ASMs and ASTs.

6. Maximal number of 1's: Quasi alternating sign triangles

The main purpose of this section is to provide a proof of Theorem 1.3 and generalizations.

6.1. The QAST partition function.

Theorem 6.1. *We have the following determinant formula for the partition function* $Z_n^{\uparrow}(u_1,\dots,u_n;u_{n+1})_{\mathrm{QAST}}$.

$$\frac{\prod_{j=1}^n \sigma(\bar{p}u_j)\prod_{i=1}^n\prod_{j=1}^{n+1}\sigma(q^2u_iu_j)\sigma(q^2\bar{u}_i\bar{u}_j)}{\sigma(q^2)^{2n}\sigma(q^4)^{n^2}\prod_{i=1}^n\sigma(u_i\bar{u}_{n+1})\prod_{1\le i<j\le n}\sigma(u_i\bar{u}_j)^2}\det_{1\le i,j\le n+1}\left(\begin{cases}\frac{1}{\sigma(q^2u_iu_j)}+\frac{1}{\sigma(q^2\bar{u}_i\bar{u}_j)}, & i\le n\\ \frac{\sigma(\bar{p}u_{n+1})}{\sigma(\bar{p}u_j)}, & i=n+1\end{cases}\right) \tag{6.1}$$

Proof. We use Theorem 4.6. The case $n=1$ is easy to verify. To show that (6.1) is indeed a Laurent polynomial in u_{n+1}, observe that

$$\frac{\prod_{j=1}^n \sigma(\bar{p}u_j)\prod_{i=1}^n\prod_{j=1}^{n+1}\sigma(q^2u_iu_j)\sigma(q^2\bar{u}_i\bar{u}_j)}{\sigma(q^2)^{2n}\sigma(q^4)^{n^2}\prod_{1\le i<j\le n}\sigma(u_i\bar{u}_j)^2}\det_{1\le i,j\le n+1}\left(\begin{cases}\frac{1}{\sigma(q^2u_iu_j)}+\frac{1}{\sigma(q^2\bar{u}_i\bar{u}_j)}, & i\le n\\ \frac{\sigma(\bar{p}u_{n+1})}{\sigma(\bar{p}u_j)}, & i=n+1\end{cases}\right)$$

is a Laurent polynomial in u_{n+1}. It is divisible by $\prod_{i=1}^n\sigma(u_i\bar{u}_{n+1})$, as the determinant vanishes if we set $u_{n+1}=\pm u_j$, for $j=1,\dots,n$, since then the j-th column coincides with the $(n+1)$-st column of the matrix up to sign.

We check the properties from Theorem 4.6.

(1)*:* To deduce the bounds on the degree and order as a Laurent polynomial in u_{n+1}, use the Leibniz formula for the determinant and observe that, after multiplying each summand with the prefactor and expanding, we obtain a sum of rational functions where each numerator has degree $2n$ and order $-2n$, and each denominator has degree n and order $-n$.

(2), (3) *and* (4)*:* The expression is readily checked to be symmetric in $u_1,\dots,u_n$, invariant under the transformation $(u_1,\dots,u_{n+1},p)\mapsto(\bar{u}_1,\dots,\bar{u}_{n+1},\bar{p})$ and even in u_i, $i=1,2,\dots,n$. Note that interchanging respective left and right boundary constants in the QAST-specialization (see Subsection 3.3.2) is equivalent to the replacement $p\mapsto\bar{p}$.

(5)*:* As $\mathrm{W}(\downarrow,u_1)=0$, $Z_n^{\downarrow}(u_1,\dots,u_n;u_{n+1})$ disappears on the right-hand side of (4.2). Let $X_n(u_1,\dots,u_n;u_{n+1})$ denote (6.1). Then we need to show the following.

$$X_n(u_1,\dots,u_n;q^2\bar{u}_1)=\frac{\sigma(\bar{p}q^2\bar{u}_1)\sigma(q^2u_1^2)}{\sigma(q^2)^2}\prod_{i=2}^n\frac{\sigma(q^2u_1u_i)\sigma(q^4\bar{u}_1u_i)}{\sigma(q^4)^2}X_{n-1}(u_2,\dots,u_n;u_1)$$

For this purpose, multiply the $(n+1)$-st column of the matrix of $X_n(u_1,\dots,u_n;q^2\bar{u}_1)$ with the prefactor $\sigma(q^2u_1u_{n+1})\sigma(q^2\bar{u}_1\bar{u}_{n+1})$. After taking $u_{n+1}=q^2\bar{u}_1$, the $(n+1)$-st column is $(\sigma(q^4),0,\dots,0)^t$, and now expand the determinant with respect to this column. □

6.2. **Specialization of the** QAST **partition function at** $u_{n+1}=p$**.** Taking $u_{n+1}\to p$ in (6.1), the last row of the matrix becomes $(0,0,\dots,0,1)$, and we obtain the following simplified formula.

Corollary 6.2. *We have the following formula for* $Z_n^{\uparrow}(u_1,\dots,u_n;p)_{\mathrm{QAST}}$.

$$\frac{\prod_{i=1}^n\sigma(q^2pu_i)\sigma(q^2\bar{p}\bar{u}_i)\prod_{i,j=1}^n\sigma(q^2u_iu_j)\sigma(q^2\bar{u}_i\bar{u}_j)}{\sigma(q^2)^{2n}\,\sigma(q^4)^{n^2}\prod_{1\le i<j\le n}\sigma(u_i\bar{u}_j)^2}\det_{1\le i,j\le n}\left(\frac{1}{\sigma(q^2u_iu_j)}+\frac{1}{\sigma(q^2\bar{u}_i\bar{u}_j)}\right) \tag{6.2}$$

Here we again sketch an alternative proof of Corollary 6.2 which avoids Theorem 6.1 and Lemma 4.4.

Sketch of an alternative proof using Theorem 4.9. We need to verify $Z_n^{\uparrow}(\bar{p}q^2,u_2,\dots,u_n;p)_{\mathrm{QAST}}=0$. By the symmetry of Theorem 4.1, it suffices to show that $Z_n^{\uparrow}(u_1,\dots,u_{n-1},\bar{p}q^2;p)_{\mathrm{QAST}}=0$. Assume $u_n=\bar{p}q^2$ and $u_{n+1}=p$, and consider the bottom bulk vertex v in the central column. Its label is $u_nu_{n+1}=q^2$, and since $\mathrm{W}(\cross,q^2)=0$, there are only two possible local configurations around v that contribute a non-zero weight (namely $\cross$ and $\cross$). However, this implies that there are only two

possible configurations for the right boundary vertex v_R adjacent to v (the vertical edge connecting v and v_R is oriented from v to v_R). The assertion follows as $\mathrm{W}(\text{⤓}, u_n) = \mathrm{W}(\text{⤒}, u_n) = 0$.

The cases $n = 1, 2$ are easy to verify. To show that (6.2) is a Laurent polynomial in $u_1, \dots, u_n$, proceed as in the footnote of the proof of Theorem 5.1.

(1)*:* We use the Leibniz rule for the determinant. The expression is a sum of rational functions with degrees and orders of the numerators in u_1 being $4n$ and $-4n$, respectively, while the degrees and orders of the denominators are $2n-2$ and $-2n+2$, respectively.

(2),(3),(4), (5) *and* (6)*:* The expression is obviously symmetric in $u_1, \dots, u_n$, invariant under the transformation $(u_1, \dots, u_n, p) \mapsto (\bar{u}_1, \dots, \bar{u}_n, \bar{p})$ and even in u_i, $i = 1, 2, \dots, n$. The identities from Lemmas 4.6 and 4.7 can be verified straightforwardly. It is also obvious that the expression in (6.2) has a zero at $u_1 = \bar{p}q^2$. □

6.3. Specialization of the QAST partition function at $u_{n+1} = p$ and $q = e^{\frac{i\pi}{6}}$.

Theorem 6.3. *We have the following Schur function expression for $Z_n^{\uparrow}(q, u_1, \dots, u_n; p)_{\mathrm{QAST}}$ at $q = e^{\frac{i\pi}{6}}$.*

$$3^{-\binom{n+1}{2}} \prod_{i=1}^{n} (p^2 u_i^2 + 1 + \bar{p}^2 \bar{u}_i^2) s_{(n,n-1,n-1,n-2,n-2,\dots,1,1)}(u_1^2, \bar{u}_1^2, \dots, u_n^2, \bar{u}_n^2) \tag{6.3}$$

Proof. Use (6.2) and observe that this expression is a specialization of one of two factors of the partition function of half-turn symmetric ASMs as noted in [Kup02, Theorem 10]. The result follows from [Oka06, Theorem 2.4 (2), 2nd eq.] or from [Str04, RS06a, Eq. (11), Eq. (31)]. □

Formulas for the specializations of $Z_n(u_1, \dots, u_n; p)_{\mathrm{QAST}}$ at $q = e^{\frac{i\pi}{4}}, e^{\frac{i\pi}{8}}$ are also provided in [Oka06, Theorem 2.4 (2)]. They correspond to x-enumerations of QASTs for $x = 0, 2$, respectively.

Remark 6.4. In [AB19] it was shown that (6.3) factorizes as

$$\begin{aligned} s_{(2n,2n-1,2n-1,2n-2,2n-2,\dots,1,1)}(u_1, \bar{u}_1, u_2, \bar{u}_2, \dots, u_{2n}, \bar{u}_{2n}) &= \\ (-1)^n so_{(n,n-1,n-1,\dots,1,1)}(u_1, \dots, u_{2n}) so_{(n,n-1,n-1,\dots,1,1)}(-u_1, \dots, -u_{2n}), \\ s_{(2n+1,2n,2n,\dots,1,1)}(u_1, \bar{u}_1, u_2, \bar{u}_2, \dots, u_{2n+1}, \bar{u}_{2n+1}) &= \\ sp_{(n,n-1,n-1,\dots,1,1)}(u_1, \dots, u_{2n+1}) o^{\mathrm{even}}_{(n+1,n,n,\dots,1,1)}(u_1, \dots, u_{2n+1}). \end{aligned} \tag{6.4}$$

6.4. **Proof of Theorem 1.3.** We set $u_i = 1$, $i = 1, \dots, n$, and $p = 1$ in (6.3) to finally prove Theorem 1.3. We use the following formula for the specialization of Schur functions.

$$s_\lambda(1, 1, \dots, 1) = \prod_{1 \le i < j \le n} \frac{\lambda_i - \lambda_j + j - i}{j - i} \tag{6.5}$$

This is, by the combinatorial interpretation of the Schur function as the generating function of semi-standard tableaux of shape λ, also the number of these tableaux. It follows that

$$3^{-\binom{n}{2}} s_{(n,n-1,n-1,n-2,n-2,\dots,1,1)}(1^{2n}) = \prod_{i=0}^{n-1} \frac{(3i+2)(3i)!}{(n+i)!}$$

and the latter is also the number of cyclically symmetric plane partitions in an $n \times n \times n$ box, see [And79].

6.5. **Outlook.** A natural question to ask is whether there is a generalization of Theorem 1.3 that is analogous to Theorem 1.2, i.e., what is a statistic on $n\times n\times n$ CSPPs that has the same distribution as the numbers of -1's in the fundamental domain of $(2n+1)\times(2n+1)$ DASASMs A with $\mathrm{N}_1(A)=n+1$? In a forthcoming paper, we will show that this is the case for a statistic that was already introduced by Mills, Robbins and Rumsey in [MRR87, p. 47], namely the number of special parts in a CSPP. In fact, this result will follow from a common generalization of Theorems 1.2 and 1.3 that involves an infinite family of alternating sign matrix objects, among which the objects from Theorems 1.2 and 1.3 are two special members. In addition, certain classes of extreme diagonally and antidiagonally symmetric alternating sign matrices of *even order* will also be members of this family.

With regard to this family, it will also make sense to consider objects with vertical symmetry, and we will enumerate these symmetry classes. A special case of this result will be that vertically symmetric ASTs of order n are equinumerous with vertically symmetric ASMs of order n. More generally, we will see that the generating functions of vertically symmetric ASMs and vertically symmetric ASTs with respect to the numbers of -1's coincide.

7. Maximal number of 0's: Off-diagonally and off-antidiagonally symmetric alternating sign matrices

In this section, we provide the proof of Theorem 1.3 and generalizations.

7.1. **The** OOSASM **partition function.** Recall the definition of the *Pfaffian* of a triangular array $A=(a_{i,j})_{1\le i<j\le 2n}$

$$\operatorname*{Pf}_{1\le i<j\le 2n}(a_{i,j})=\sum_{\substack{\pi=\{\{i_1,j_1\},\{i_2,j_2\},\dots,\{i_n,j_n\}\}\\ \pi\text{ perfect matching of }K_{2n},i_k<j_k}}\operatorname{sgn}\pi\prod_{k=1}^{n}a_{i_k,j_k},$$

where $\operatorname{sgn}\pi$ is the sign of the permutation $i_1j_1i_2j_2\dots i_nj_n$. Suppose $\widehat{A}=(a_{i,j})_{1\le i,j\le 2n}$ is the skew symmetric extension of A. Then it is a well-known fact that

$$\left(\operatorname*{Pf}_{1\le i<j\le 2n}(a_{i,j})\right)^2=\det_{1\le i,i\le 2n}(a_{i,j}).$$

Theorem 7.1. *We have the following Pfaffian formula for the* OOSASM *partition function*

$$Z_n(u_1,\dots,u_n;u_{n+1})_{\mathrm{OOSASM}}=P_{\lceil\frac{n}{2}\rceil}(u_1,\dots,u_{2\lceil\frac{n}{2}\rceil})\,Q_{\lceil\frac{n+1}{2}\rceil}(u_1,\dots,u_{2\lceil\frac{n+1}{2}\rceil-1}),$$

where

$$P_m(u_1,\dots,u_{2m})=\sigma(q^4)^{-(m-1)2m}\prod_{1\le i<j\le 2m}\frac{\sigma(q^2u_iu_j)\,\sigma(q^2\bar{u}_i\bar{u}_j)}{\sigma(u_i\bar{u}_j)}\operatorname*{Pf}_{1\le i<j\le 2m}\left(\frac{\sigma(u_i\bar{u}_j)}{\sigma(q^2u_iu_j)\,\sigma(q^2\bar{u}_i\bar{u}_j)}\right)$$

and

$$Q_m(u_1,\dots,u_{2m-1})=\sigma(q^4)^{-(m-1)(2m-1)}\prod_{1\le i<j\le 2m-1}\frac{\sigma(q^2u_iu_j)\,\sigma(q^2\bar{u}_i\bar{u}_j)}{\sigma(u_i\bar{u}_j)}$$
$$\times\operatorname*{Pf}_{1\le i<j\le 2m}\left(\begin{cases}\frac{\sigma(u_i\bar{u}_j)}{\sigma(q^2u_iu_j)}+\frac{\sigma(u_i\bar{u}_j)}{\sigma(q^2\bar{u}_i\bar{u}_j)}, & j<2m\\ 1, & j=2m\end{cases}\right).$$

Curiously, $P_n(u_1,\dots,u_{2n})$ is the partition function of $2n\times 2n$ OSASMs using the bulk weights from Table 1 and normalizing the boundary weights as in the OOSASM case (i.e., all boundary weights are 1). To see this, set $a=q^2$ in Kuperberg's formula [Kup02, Theorem 10] and divide by $\sigma(q^4)^{\binom{2n}{2}}$ to account for the different normalization of the bulk weights.

Proof. We use Theorem 4.6. The case $n = 1$ is easy to verify.

Both $P_m(u_1, \dots, u_{2m})$ and $Q_m(u_1, \dots, u_{2m-1})$ are Laurent polynomials as the two Pfaffians involved are antisymmetric functions in the variables $u_1, \dots, u_{2m}$ and $u_1, \dots, u_{2m-1}$, respectively, and odd in each u_i.

(1)*:* By the definition of the Pfaffian, $P_m(u_1, \dots, u_{2m})$ is a sum of rational functions where the degrees and orders of the numerators in u_1 are $4m-4$ and $-4m+4$, respectively, and of the denominators $2m-2$ and $-2m+2$, respectively. Hence the bounds for the degree and order of $P_m(u_1, \dots, u_{2m})$ are $2m-2$ and $-2m+2$, respectively. This shows that, in case of n is odd, the degree and order in u_{n+1} of the proposed expression for the partition function are at most $n-1$ and at least $-n+1$, respectively ($m = \lceil \frac{n}{2} \rceil$).

On the other hand, the degrees (resp. orders) of the numerators of the summands of $Q_m(u_1, \dots, u_{2m-1})$ in u_1 are either $4m-4$ (resp. $-4m+4$) or $4m-5$ (resp. $-4m+5$), depending on whether or not 1 is matched to $2m$ and the degrees (resp. orders) of the denominators are $2m-2$ (resp. $-2m+2$) and $2m-3$ (resp. $-2m+3$). Thus, the degree and order of $Q_m(u_1, \dots, u_{2m-1})$ are at most $2m-2$ and at least $-2m+2$, respectively. This shows that, in case of n is even, the degree and order in u_{n+1} of the proposed expression for the partition function are at most n and at least $-n$, respectively ($m = \lceil \frac{n+1}{2} \rceil$).

(2), (3) *and* (4)*:* The expression in the statement is symmetric in $u_1, \dots, u_n$ as it is the product of two symmetric functions in $u_1, \dots, u_n$. It is also invariant under the replacement $(u_1, \dots, u_n) \mapsto (\bar{u}_1, \dots, \bar{u}_{n+1})$ as $P_m(u_1, \dots, u_{2m})$ is invariant under $(u_1, \dots, u_{2m}) \mapsto (\bar{u}_1, \dots, \bar{u}_{2m})$ and $Q_m(u_1, \dots, u_{2m-1})$ is invariant under $(u_1, \dots, u_{2m-1}) \mapsto (\bar{u}_1, \dots, \bar{u}_{2m-1})$, and even in u_i, $i = 1, 2, \dots, n$.

(5)*:* Let $X_n(u_1, \dots, u_n; u_{n+1})$ denote the expression in the statement. Then—by Lemma 4.4 and by taking into account the normalization we have chosen—we need to show

$$X_n(u_1, \dots, u_n; q^2\bar{u}_1) = \prod_{i=2}^{n} \frac{\sigma(q^2 u_1 u_i)\sigma(q^4 \bar{u}_1 u_i)}{\sigma(q^4)^2} X_{n-1}(u_2, \dots, u_n; u_1).$$

Thus it suffices to show

$$P_n(u_1, \dots, u_{2n-1}, q^2\bar{u}_1) = \prod_{i=2}^{2n-1} \frac{\sigma(q^2 u_1 u_i)\sigma(q^4 \bar{u}_1 u_i)}{\sigma(q^4)^2} P_{n-1}(u_2, \dots, u_{2n-1}),$$

$$Q_n(u_1, \dots, u_{2n-2}, q^2\bar{u}_1) = \prod_{i=2}^{2n-2} \frac{\sigma(q^2 u_1 u_i)\sigma(q^4 \bar{u}_1 u_i)}{\sigma(q^4)^2} Q_{n-1}(u_2, \dots, u_{2n-2})$$

and this follows easily from the definition of the Pfaffian. □

7.2. **Specialization of the** OOSASM **partition function at** $q = e^{\frac{i\pi}{6}}$**.** Here we obtain a formula involving *symplectic characters* $sp_\lambda(x_1, \dots, x_n)$ when specializing at $q = e^{\frac{i\pi}{6}}$. (See [FH91, § 24.2] for a reference on symplectic characters.) We use the determinantal formula

$$sp_\lambda(x_1, \dots, x_n) = \frac{\det\limits_{1 \le i,j \le n} \left(x_i^{\lambda_j + n - j + 1} - \bar{x}_i^{\lambda_j + n - j + 1} \right)}{\prod_{i=1}^{n} (x_i - \bar{x}_i) \prod_{1 \le i < j \le n} (x_i + \bar{x}_i - x_j - \bar{x}_j)} \tag{7.1}$$

if $\lambda = (\lambda_1, \lambda_2, \dots, \lambda_n)$, and extend the partition with zero parts if its length is less than n.

Symplectic characters are also generating functions of certain tableaux: A *symplectic tableaux* of shape λ is a semistandard tableaux of shape λ with entries $1 < 1' < 2 < 2' < 3 < \dots$ and the additional constraint that entries in row i are no smaller than i, see [Sun90, Theorem 2.3]. Now

$$sp_\lambda(x_1, \dots, x_n) = \sum_T \prod_{i=1}^{n} x_i^{(\#\, i \in T) - (\#\, i' \in T)},$$

where the sum is over all symplectic tableaux of shape λ with entries in $\{1,1',2,2',\dots,n,n'\}$.

Theorem 7.2. *Assume $q=e^{\frac{i\pi}{6}}$. We have the following formula for $Z_{2n-1}(u_1,\dots,u_{2n-1};u_{2n})_{\mathrm{OOSASM}}$ in terms of symplectic characters*

$$3^{-(n-1)(2n-1)}sp_{(n-1,n-1,n-2,n-2,\dots,1,1)}(u_1^2,\dots,u_{2n}^2)sp_{(n-1,n-2,n-2,n-3,n-3,\dots,1,1)}(u_1^2,\dots,u_{2n-1}^2) \tag{7.2}$$

and for $Z_{2n}(u_1,\dots,u_{2n};u_{2n+1})_{\mathrm{OOSASM}}$

$$3^{-n(2n-1)}sp_{(n-1,n-1,n-2,n-2,\dots,1,1)}(u_1^2,\dots,u_{2n}^2)sp_{(n,n-1,n-1,n-2,n-2,\dots,1,1)}(u_1^2,\dots,u_{2n+1}^2). \tag{7.3}$$

We use Theorem 7.1 to prove the theorem. As $P_n(u_1,\dots,u_{2n})$ is the partition function of OSASMs, we can take its specialization at $q=e^{\frac{i\pi}{6}}$ from [Oka06, Theorem 2.5 (2)] where it was shown that

$$P_n(u_1,\dots,u_{2n})\big|_{q=e^{\frac{i\pi}{6}}}=3^{-(n-1)n}sp_{(n-1,n-1,n-2,n-2,\dots,1,1)}(u_1^2,\dots,u_{2n}^2).$$

See also [RS04, Theorem 5]. (In [Oka06, Theorem 2.5 (2)] appears also a formula for the specialization of $P_n(u_1,\dots,u_{2n})$ at $q=e^{\frac{i\pi}{4}}$.) We still need to show

$$Q_n(u_1,\dots,u_{2n-1})\big|_{q=e^{\frac{i\pi}{6}}}=3^{-(n-1)^2}sp_{(n-1,n-2,n-2,n-3,n-3,\dots,1,1)}(u_1^2,\dots,u_{2n-1}^2). \tag{7.4}$$

The Pfaffian identity stated next is useful in the following.

Lemma 7.3. *We define*

$$\mathcal{W}(x_1,\dots,x_n;a_1,\dots,a_n)=\det_{1\le i,j\le n}\left(x_i^{j-1}+a_i\,x_i^{n-j}\right).$$

Then

$$\operatorname*{Pf}_{1\le i<j\le 2n}\left(\begin{cases}\frac{\mathcal{W}(x_i,x_j;a_i,a_j)(1+a_ia_j)}{1-x_ix_j}, & j<2n\\ 1-a_i^2, & j=2n\end{cases}\right)=\frac{\mathcal{W}(x_1,\dots,x_{2n-1};-a_1^2,-a_2^2,\dots,-a_{2n-1}^2)}{\prod_{1\le i<j\le 2n-1}(1-x_ix_j)}. \tag{7.5}$$

Proof. The following special case of an identity due to Okada [Oka06, Theorem 3.4., Eq. (20)] is applied.

$$\operatorname*{Pf}_{1\le i<j\le 2n-2}\left(\frac{\mathcal{W}(x_i,x_j,x_{2n-1};a_i,a_j,a_{2n-1})}{1-x_ix_j}\right)=\frac{(1+a_{2n-1})^{n-2}}{\prod_{1\le i<j\le 2n-2}(1-x_ix_j)}\mathcal{W}(x_1,\dots,x_{2n-1};a_1,\dots,a_{2n-1}) \tag{7.6}$$

(Substitute n for $n-1$, and set $b_1=\dots=b_{2n-2}=0$, $z=x_{2n-1}$, $c=a_{2n-1}$ in Okada's identity.) After replacing a_i by $-a_i^2$ in (7.6), the right-hand side is—up to the factor $(1-a_{2n-1}^2)^{n-2}\prod_{i=1}^{2n-2}(1-x_ix_{2n-1})$—equal to the right-hand side in the statement. It suffices to show

$$\begin{aligned}(1-a_{2n-1}^2)^{n-2}\prod_{i=1}^{2n-2}(1-x_ix_{2n-1})\operatorname*{Pf}_{1\le i<j\le 2n}&\left(\begin{cases}\frac{\mathcal{W}(x_i,x_j;a_i,a_j)(1+a_ia_j)}{1-x_ix_j}, & j<2n\\ 1-a_i^2, & j=2n\end{cases}\right)\\ &=\operatorname*{Pf}_{1\le i<j\le 2n-2}\left(\frac{\mathcal{W}(x_i,x_j,x_{2n-1};-a_i^2,-a_j^2,-a_{2n-1}^2)}{1-x_ix_j}\right).\end{aligned} \tag{7.7}$$

The fact that elementary row and column operations do not change the determinant of a matrix has an analogue for Pfaffians: For instance, suppose A is an even-order skew-symmetric matrix, and A' is obtained from A by adding a multiple of row i to row j, and simultaneously adding the same multiple of column i to column j, for some $i\neq j$. Then $\operatorname{Pf}(A)=\operatorname{Pf}(A')$. The identity (7.7) can now be proven using such operations.

More specifically, we use the identity

$$c_{2n-1,2n}^{n-2} \operatorname*{Pf}_{1\le i<j\le 2n}(c_{ij}) = \operatorname*{Pf}_{1\le i<j\le 2n-2}\left(\operatorname{Pf}\begin{pmatrix} c_{i,j} & c_{i,2n-1} & c_{i,2n} \\ & c_{j,2n-1} & c_{j,2n} \\ & & c_{2n-1,2n}\end{pmatrix}\right), \tag{7.8}$$

for any $(c_{i,j})_{1\le i<j\le 2n}$, which is a special case of a Pfaffian analogue of Sylvester's determinant identity. (Replace n by $n-1$, and set $\beta=\{1,\dots,2n-2\}$ and $\alpha=\{2n-1,2n\}$ in an identity of Knuth [Knu96, Eq. (2.5)].) Alternatively, (7.8) can be obtained directly by transforming the first $2n-2$ entries in the last column of $(c_{i,j})_{1\le i<j\le 2n}$ to zeros using certain row and column operations, and then expanding along the last column. Now let $(c_{i,j})_{1\le i<j\le 2n}$ be the array in the Pfaffian on the left-hand side of (7.7). It can be checked straightforwardly that

$$\operatorname{Pf}\begin{pmatrix} c_{i,j} & c_{i,2n-1} & c_{i,2n} \\ & c_{j,2n-1} & c_{j,2n} \\ & & c_{2n-1,2n}\end{pmatrix} = \frac{\mathcal{W}(x_i,x_j,x_{2n-1};-a_i^2,-a_j^2,-a_{2n-1}^2)}{(1-x_ix_j)(1-x_ix_{2n-1})(1-x_jx_{2n-1})}.$$

The result now follows from (7.8). □

Proof of Theorem 7.2. We prove (7.4). Assume $q=e^{\frac{i\pi}{6}}$. As

$$\sigma(q^4)=\sqrt{3}i,\quad \sigma(q^2x)\sigma(q^2\bar{x})=-(1+x^2+\bar{x}^2),\quad \sigma(q^2x)+\sigma(q^2\bar{x})=\sqrt{3}i(x+\bar{x}),$$

we have that $Q_n(u_1,\dots,u_{2n-1})$ is equal to

$$(-3)^{-(n-1)^2}\prod_{1\le i<j\le 2n-1}\frac{1+u_i^2u_j^2+\bar{u}_i^2\bar{u}_j^2}{u_i\bar{u}_j-\bar{u}_iu_j}\operatorname*{Pf}_{1\le i<j\le 2n}\left(\begin{cases}\frac{u_i^2-\bar{u}_i^2-u_j^2+\bar{u}_j^2}{1+u_i^2u_j^2+\bar{u}_i^2\bar{u}_j^2}, & j<2n\\ 1, & j=2n\end{cases}\right).$$

By setting $x_i=u_i^6$ and $a_i=-u_i^2$ in Lemma 7.3, we see that the left-hand side of (7.5) is, up to the factor $\prod_{i=1}^{2n-1}(1-u_i^4)$ (which arises from a factor b_ib_j in each entry of the triangular array, where $b_i=1/(1-u_i^4)$ for $i<2n$ and $b_{2n}=1$), equal to the Pfaffian in the previous expression. This implies that the previous expression is equal to

$$\begin{aligned}&(-3)^{-(n-1)^2}\prod_{i=1}^{2n-1}\frac{1}{1-u_i^4}\prod_{1\le i<j\le 2n-1}\frac{1+u_i^2u_j^2+\bar{u}_i^2\bar{u}_j^2}{(u_i\bar{u}_j-\bar{u}_iu_j)(1-u_i^6u_j^6)}\det_{1\le i,j\le 2n-1}\left(u_i^{6j-6}-u_i^{12n-4-6j}\right)\\ &=(-1)^n\,3^{-(n-1)^2}\prod_{i=1}^{2n-1}\frac{u_i^{6n-4}}{1-u_i^4}\prod_{1\le i<j\le 2n-1}\frac{1+u_i^2u_j^2+\bar{u}_i^2\bar{u}_j^2}{(u_i\bar{u}_j-\bar{u}_iu_j)(1-u_i^6u_j^6)}\det_{1\le i,j\le 2n-1}\left(u_i^{2(3n-3j+1)}-\bar{u}_i^{2(3n-3j+1)}\right).\end{aligned}$$

The required right-hand side of (7.4) can now be obtained from this expression by multiplying columns $n+1,\dots,2n-1$ of the matrix by -1, reordering the columns as $1,2n-1,2,2n-2,\dots,n-1,n+1,n$, simplifying the prefactor, and applying the determinant formula (7.1) for symplectic characters □

Remark 7.4. A different approach to proving Theorem 7.2 would be to show that the function in this theorem fulfills the properties from Theorem 4.6 in the special case $q=e^{\frac{i\pi}{6}}$. (The same idea would clearly also lead to direct proofs of Theorems 5.3 and 6.3, where in this case we would have to show that the properties from Theorem 4.9 are satisfied. This approach was previously used, see for instance

[Str06].) It turns out that it suffices to show

$$\frac{sp_{(n-1,n-1,n-2,n-2,\dots,1,1)}(u_1,u_2,\dots,u_{2n-1},q^4\bar{u}_1)}{sp_{(n-2,n-2,\dots,1,1)}(u_2,u_3,\dots,u_{2n-1})} = \prod_{i=2}^{2n-1}(\bar{q}^2u_1+q^2\bar{u}_1+u_i+\bar{u}_i),$$

$$\frac{sp_{(n,n-1,n-1,\dots,1,1)}(u_1,u_2,\dots,u_{2n},q^4\bar{u}_1)}{sp_{(n-1,n-2,n-2,\dots,1,1)}(u_2,u_3,\dots,u_{2n})} = \prod_{i=2}^{2n}(\bar{q}^2u_1+q^2\bar{u}_1+u_i+\bar{u}_i)$$

at $q=e^{\frac{i\pi}{6}}$. Since $sp_\lambda(u_1,\dots,u_n)$ is a certain generating function of symplectic tableaux, it would be interesting to explore whether these identities have a combinatorial proof.

7.3. **Proof of Theorem 1.5.** We set $u_i=1$ for $i=1,\dots,n$ in (7.2) and (7.3) to compute the number of OOSASMs. Here we need the following product formula, see [FH91, Exercise 24.20].

$$sp_\lambda(1,1,\dots,1)=\prod_{i=1}^{n}\frac{\lambda_i+n+1-i}{n+1-i}\prod_{1\le i<j\le n}\frac{(\lambda_i-\lambda_j+j-i)(\lambda_i+\lambda_j+2n+2-i-j)}{(j-i)(2n+2-i-j)}$$

We obtain

$$|\operatorname{OOSASM}(4n-1)|=\prod_{i=0}^{n-1}\frac{(3i+2)!(3n+3i)!}{(2n+i)!(3n+i)!},$$

and this is also the number of $(4n+1)\times(4n+1)$ VHSASMs. Finally,

$$|\operatorname{OOSASM}(4n+1)|=\prod_{i=1}^{n}\frac{(3i-1)!(3n+3i)!}{(2n+i)!(3n+i+1)!},$$

and this is also the number of $(4n+3)\times(4n+3)$ VHSASMs, see [Oka06].

Acknowledgement

We thank Matjaž Konvalinka for very helpful discussions.

The authors acknowledge hospitality and support from the Galileo Galilei Institute, Florence, Italy, during the programme "Statistical Mechanics, Integrability and Combinatorics" held in May–June 2015. The first author (A.A.) is partially supported by UGC Centre for Advanced Studies and acknowledges support from DST grant DST/INT/SWD/VR/P-01/2014. The third author (I.F.) acknowledges support from the Austrian Science Foundation FWF, START grant Y463.

Appendix A. ASMs and ASTs with a single -1

We count $n\times n$ ASMs with precisely one -1: Such matrices are uniquely determined by the following information.

- The columns of the unique -1 and the two 1's that are situated in the same row. There are $\binom{n}{3}$ choices.
- The rows of the -1 and the two 1's that are situated in the same column as the -1. There are $\binom{n}{3}$ choices.
- The permutation matrix of order $n-3$ that is obtained by deleting the three chosen rows and the three chosen columns. There are $(n-3)!$ choices.

Therefore, there is a total of $\binom{n}{3}^2(n-3)!$ ASMs of order n with precisely one -1. We note that formulas for the numbers of ASMs with more -1's are given in [Ava10] and [LG11], and that ASMs with one -1 were studied by Lalonde [Lal02, Lal06].

On the other hand, ASTs with precisely one -1 are less accessible: Let $i_1\in\{2,3,\dots,n-1\}$ be the row of the -1, counted from the bottom, and $j_2\in\{-n+2,-n+3,\dots,n-2\}$ its column, counted

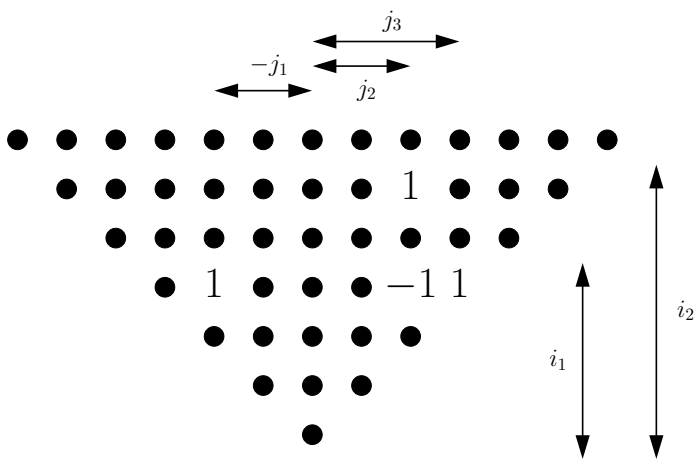

FIGURE 5. Definition of i_1, i_2, j_1, j_2, j_3

from the central column and where we use the negative sign if the column is left of the central column. Let j_1, j_3, i_2 encode the positions of the three 1's to the left, to the right and above the -1 as indicated in Figure 5. For integers a, b, we use the following notation.

$$p(a,b) = \begin{cases} a(a+1)\cdots b & \text{if } a \le b, \\ 1 & \text{otherwise.} \end{cases}$$

We count all possible subarrays consisting of the $i_1 - 1$ bottom rows of such an AST: Since there is neither a 1 in column j_1 nor in column j_3, the number is

$$p(1, \min(|j_1|, |j_3|))p(\min(|j_1|, |j_3|), \max(|j_1|, |j_3|) - 1)p(\max(|j_1|, |j_3|) - 1, i_1 - 3) = F_1(j_1, j_3, i_1). \quad \text{(A.1)}$$

(The argument is analogous to that used for counting ASTs without -1's.) If we impose the condition that there is also no 1 in column j_2 in this subarray then this number is

$$p(1, \min)p(\min, | -1)p(| -1, \max -2)p(\max -2, i_1 - 4) = F_2(j_1, j_2, j_3, i_1), \quad \text{(A.2)}$$

where $\min = \min(|j_1|, |j_2|, |j_3|)$, $\max = \max(|j_1|, |j_3|)$, $| = |j_1| + |j_2| + |j_3| - \min - \max$. There are $p(i_1 - 1, i_2 - 3)p(i_2, n - 1)$ possibilities for extending the latter type of subarray to a permissible AST of order n. Combining (A.1) and (A.2), it is clear that there are

$$F_1(j_1, j_3, i_1) - F_2(j_1, j_2, j_3, i_1)$$

possibilities for the bottom $i_1 - 1$ rows that have a 1 in column j_2. Here, there are $p(i_1, i_2 - 2)p(i_2 + 1, n)$ ways to extend this to a permissible AST of order n. In total, there are

$$\sum_{-n+1<j_1<j_2<j_3<n-1} \sum_{\max(|j_1|,|j_3|)+1 \le i_1 < i_2 \le n} \Big[F_2(j_1, j_2, j_3, i_1)p(i_1 - 1, i_2 - 3)p(i_2, n - 1) + \left(F_1(j_1, j_3, i_1) - F_2(j_1, j_2, j_3, i_1)\right) p(i_1, i_2 - 2)p(i_2 + 1, n)\Big]$$

configurations. It is tedious but straightforward to show that this is indeed equal to $\binom{n}{3}^2 (n-3)!$.

REFERENCES

[AB19] A. Ayyer and R.E. Behrend. Factorization theorems for classical group characters, with applications to alternating sign matrices. *J. Combin. Theory Ser. A*, 165:78–105, 2019.

[And79] G.E. Andrews. Plane partitions. III. The weak Macdonald conjecture. *Invent. Math.*, 53(3):193–225, 1979.

[And94] G.E. Andrews. Plane partitions. V. The TSSCPP conjecture. *J. Combin. Theory Ser. A*, 66(1):28–39, 1994.

[Ava10] J.-C. Aval. Keys and alternating sign matrices. *Sém. Lothar. Combin.*, 59:Art. B59f, 13, 2007/10.

[Bax89] R.J. Baxter. *Exactly solved models in statistical mechanics*. Academic Press Inc. [Harcourt Brace Jovanovich Publishers], London, 1989. Reprint of the 1982 original.

[BDFZJ12] R.E. Behrend, P. Di Francesco, and P. Zinn-Justin. On the weighted enumeration of alternating sign matrices and descending plane partitions. *J. Combin. Theory Ser. A*, 119(2):331–363, 2012.

[BDFZJ13] R.E. Behrend, P. Di Francesco, and P. Zinn-Justin. A doubly-refined enumeration of alternating sign matrices and descending plane partitions. *J. Combin. Theory Ser. A*, 120(2):409–432, 2013.

[Beh13] R.E. Behrend. Multiply-refined enumeration of alternating sign matrices. *Adv. Math.*, 245:439–499, 2013.

[BF] R.E. Behrend and I. Fischer. Diagonally symmetric alternating sign matrices. In preparation.

[BFK17] R.E. Behrend, I. Fischer, and M. Konvalinka. Diagonally and antidiagonally symmetric alternating sign matrices of odd order. *Adv. Math.*, 315:324–365, 2017.

[Che84] I. Cherednik. Factorizing particles on a half line and root systems. *Theoret. and Math. Phys.*, 61(1):977–983, 1984.

[Ciu97] M. Ciucu. Enumeration of perfect matchings in graphs with reflective symmetry. *J. Combin. Theory Ser. A*, 77(1):67–97, 1997.

[CK09] M. Ciucu and C. Krattenthaler. A factorization theorem for classical group characters, with applications to plane partitions and rhombus tilings. In *Advances in combinatorial mathematics*, pages 39–59. Springer, Berlin, 2009.

[dVGR93] H.J. de Vega and A. González-Ruiz. Boundary K-matrices for the six vertex and the $n(2n-1)$ A_{n-1} vertex models. *J. Phys. A*, 26(12):L519–L524, 1993.

[EKLP92] N.D. Elkies, G. Kuperberg, M. Larsen, and J. Propp. Alternating-sign matrices and domino tilings. I. *J. Algebraic Combin.*, 1(2):111–132, 1992.

[FH91] W. Fulton and J.D. Harris. *Representation theory*, volume 129 of *Graduate Texts in Mathematics*. Springer-Verlag, New York, 1991. A first course, Readings in Mathematics.

[Fis11] I. Fischer. Refined enumerations of alternating sign matrices: monotone (d, m)-trapezoids with prescribed top and bottom row. *J. Alg. Combin.*, 33:239 – 257, 2011.

[Fis12] I. Fischer. Linear relations of refined enumerations of alternating sign matrices. *J. Comb. Theory Ser. A*, 119:556 – 578, 2012.

[GZ94] S. Ghoshal and A.B. Zamolodchikov. Boundary S matrix and boundary state in two-dimensional integrable quantum field theory. *Internat. J. Modern Phys. A*, 9(21 & 24):3841–3885 & 4353, 1994.

[Ize87] A.G. Izergin. Partition function of the six-vertex model in a finite volume. *Soviet Phys. Dokl.*, 32(11):878–879, 1987.

[Knu96] D.E. Knuth. Overlapping Pfaffians. *Electron. J. Combin.*, 3(2):Research Paper 5, 13 pp. (electronic), 1996.

[Kor82] V.E. Korepin. Calculation of norms of Bethe wave functions. *Comm. Math. Phys.*, 86(3):391–418, 1982.

[Kup96] G. Kuperberg. Another proof of the alternating sign matrix conjecture. *Int. Math. Res. Notices*, 3:139–150, 1996.

[Kup02] G. Kuperberg. Symmetry classes of alternating-sign matrices under one roof. *Ann. of Math. (2)*, 156(3):835–866, 2002.

[Lal02] P. Lalonde. q-enumeration of alternating sign matrices with exactly one -1. *Discrete Math.*, 256(3):759–773, 2002. LaCIM 2000 Conference on Combinatorics, Computer Science and Applications (Montreal, QC).

[Lal06] P. Lalonde. Alternating sign matrices with one -1 under vertical reflection. 113(6):980–994, 2006.

[LG11] F. Le Gac. *Quelques problèmes d'énumération autour des matrices à signes alternants*. PhD thesis, Bordeaux 1, 2011.

[MRR82] W.H. Mills, D.P. Robbins, and H.C. Rumsey, Jr. Proof of the Macdonald conjecture. *Invent. Math.*, 66(1):73–87, 1982.

[MRR83] W. H. Mills, D.P. Robbins, and H.C. Rumsey, Jr. Alternating sign matrices and descending plane partitions. *J. Combin. Theory Ser. A*, 34(3):340–359, 1983.

[MRR86] W.H. Mills, D.P. Robbins, and H.C. Rumsey, Jr. Self-complementary totally symmetric plane partitions. *J. Combin. Theory Ser. A*, 42(2):277–292, 1986.

[MRR87] W.H. Mills, D.P. Robbins, and H.C. Rumsey, Jr. Enumeration of a symmetry class of plane partitions. *Discrete Math.*, 67(1):43–55, 1987.

[Oka06] S. Okada. Enumeration of symmetry classes of alternating sign matrices and characters of classical groups. *J. Algebraic Combin.*, 23(1):43–69, 2006.

[Rob91] D. P. Robbins. The story of $1, 2, 7, 42, 429, 7436, \ldots$. *Math. Intelligencer*, 13(2):12–19, 1991.

[Rob00] D. P. Robbins. Symmetry classes of alternating sign matrices. 2000. Preprint, arXiv:math.CO/0008045.

[RR86] D.P. Robbins and H.C. Rumsey, Jr. Determinants and alternating sign matrices. *Adv. Math.*, 62(2):169–184, 1986.

[RS04] A.V. Razumov and Y.G. Stroganov. On refined enumerations of some symmetry classes of ASMs. *Theoret. Math. Phys.*, 141:1609–1630, 2004.

[RS06a] A. V. Razumov and Y. G. Stroganov. Enumerations of half-turn symmetric alternating-sign matrices of odd order. *Theoret. Math. Phys.*, 148:1174–1198, 2006.

[RS06b] A.V. Razumov and Y.G. Stroganov. Enumeration of quarter-turn symmetric alternating-sign matrices of odd-order. *Theoret. Math. Phys.*, 149(3):1639–1650, 2006.

[Skl88] E.K. Sklyanin. Boundary conditions for integrable quantum systems. *J. Phys. A*, 21(10):2375–2389, 1988.

[Sta86] R.P. Stanley. Symmetries of plane partitions. *J. Combin. Theory Ser. A*, 43(1):103–113, 1986.

[Str04] Y. G. Stroganov. Izergin-Korepin determinant reloaded. *arXiv:math-ph/0409072*, 2004.

[Str06] Y. G. Stroganov. Izergin-Korepin determinant at a third root of unity. *Theoret. Math. Phys.*, 146:53–62, 2006.

[Sun90] S. Sundaram. Tableaux in the representation theory of the classical Lie groups. In *Invariant theory and tableaux (Minneapolis, MN, 1988)*, volume 19 of *IMA Vol. Math. Appl.*, pages 191–225. Springer, New York, 1990.

[Zei96a] D. Zeilberger. Proof of the alternating sign matrix conjecture. *Electron. J. Comb.*, 3:1–84, 1996.

[Zei96b] D. Zeilberger. Proof of the refined alternating sign matrix conjecture. *New York J. Math.*, 2:59–68, 1996.

Arvind Ayyer, Department of Mathematics, Indian Institute of Science, Bangalore - 560012, India
Email address: `arvind@math.iisc.ernet.in`

Roger E. Behrend, School of Mathematics, Cardiff University, Cardiff, CF24 4AG, UK
Email address: `behrendr@cardiff.ac.uk`

Ilse Fischer, Fakultät für Mathematik, Universität Wien, Oskar-Morgenstern-Platz 1, 1090 Wien, Austria
Email address: `ilse.fischer@univie.ac.at`