AN INVESTIGATION OF METHODS OF RECORDING THE ELECTRICAL ACTIVITY OF THE NERVOUS SYSTEM WITH PARTICULAR REFERENCE TO THE OCCURRENCE AND SUPPRESSION OF STIMULUS ARTEFACT

by

J.M.M. NEILSON B.Sc.

Thesis presented for the Degree of Doctor of Philosophy
of the
University of Edinburgh in the Faculty of Medicine

August 1962

CONTENTS

CHAPTER ONE

INTRODUCTION

Much has been learned of the physiology of the nervous system by recording its electrical activity, and it may be said that progress in this field, as in many other branches of science, has been closely correlated with advances in technique. Thus, as better apparatus has become available, so work on current neuro-physiological problems has been facilitated, often leading to new investigations requiring further technical developments.

It is with this technical, rather than the biological aspect of electro-physiological recording that this thesis is concerned.

The potentials recorded from the nervous system vary in amplitude from around a hundred millivolts for intra-cellular recording, to less than one microvolt in some cases when electrodes on the surface of the body are used to pick up the action potentials of underlying structures. Recording potentials at the low end of this hundred thousand to one amplitude range presents considerable technical difficulty.

While the recording apparatus used by early investigators was insufficiently sensitive to detect these smaller potentials, modern amplifiers can provide virtually unlimited amplification so that the smallest detectable potentials are now determined by the effective 'Signal to Noise Ratio' of the recording system. In this context the 'Signal' is the output of the recording apparatus produced by the wanted biological potential, while the 'Noise' is the total output of the system in the absence of the signal.

The noise may be regarded as having four main components viz:-

1. Unwanted biological potentials
2. Electrical noise originating within the recording system
3. Electrical noise originating outside the recording system, in particular 'hum' induced from the A.C. supply mains
4. Potentials injected into the recording system through the use of electrical stimulators.

1. In addition to the signal, the potentials picked up by the recording electrodes may include components originating in biological structures adjacent to the tissue from which the recording is intended. In so far as these extra potentials are irrelevant to the investigation in hand, they are undesirable and may be regarded as noise. For example, when electrodes on the surface of a limb are used to record the action potential of a peripheral nerve, contraction of muscles near the recording electrodes may interfere seriously with the small signals from the nerve. Separation of the wanted component from the total potential picked up by the recording electrodes can sometimes be achieved by technical means. Thus, the low frequency components of an electroencephalogram may be separated from the high frequency components of interfering muscle potentials by filtering in the recording amplifier. Again, when the wanted potential can be triggered by an applied stimulus, this response can be selected out of unsynchronised activity by the averaging technique originated by Dawson (1954) for recording evoked

responses in the E.E.G.

In all cases, and in particular when such purely technical measures cannot be applied, separation of the signal from unwanted biological potentials is dependent on electrode positioning and on the extent to which adequate z relaxation of the interfering structures can be achieved. For this reason the problem might well be regarded as a physiological rather than a purely technical one.

This 'biological noise', although inconvenient, is at least a natural feature on the record of the electrical activity of a complex living structure, and it seems difficult to justify the use of the term 'artefact' (from the Latin 'ars' - art and 'factum' - made) in connection with such interference. The Shorter Oxford English Dictionary defines 'artefact' as 'an artificial product' and, of six other dictionariex consulted, all give renderings consistent with the Latin derivation and stress the essentially unnatural character of an artefact. Only one of the six (The British Medical Dictionary, MacNalty) allows for a natural artefact in its definition ".... (3) In electroencephalography, any wave that has its origin elsewhere than in the brain". Notwithstanding this last authority, it is felt that the term 'artefact' might be more logically reserved for features on the record which are non-biological in origin. Into this category fall the remaining three components of the noise limiting the recording of weak signals from the nervous system.

2. Electrical noise originating within the recording system includes the thermal agitation noise of the resistances in the recording system, particularly in the resistance of high impedance microelectrodes if used, the

shot noise, flicker noise and microphonic noise of the valves used in the amplifier or the corresponding semiconductor noise of transistors, and 'hum' introduced by the power supply circuits in mains operated equipment. The hum introduced by a well designed power supply system should be below the level of the valve and thermal agitation noise and valves may be selected for low noise and microphony. Using low resistance electrodes and restricting the bandwidth of the recording amplifier to the minimum necessary to record the signal satisfactorily, very low noise levels can be achieved. Indeed, Nightingale (1958) has shown that it is possible to reduce the noise level of the recording system sufficiently to record the thermal agitation noise of the resistance of the tissues themselves. When microelectrodes must be used, the thermal agitation noise generated in their high resistance may easily exceed the rest of the recording system noise. Fortunately the signals recorded by such electrodes are often relatively large, measurable in millivolts rather than microvolts, so that if special low resistance microelectrodes such as those described by Svaetichin (1952) are used, there must be few occasions bn which the recording of weak signals is limited by noise generated within the recording system.

3. The third component of the recording system noise is that resulting from potentials in the amplifier and its associated connections by external electric and magnetic fields. Although the major part of this induced voltage is usually due to 50 c/s fields from mains operated equipment and wiring, interference can also be caused by radio frequency fields emanating from short wave diathermy apparatus or even from a sparking thermostat contact. The technique of reducing this type of interference is well

described in such works as Dickenson (1950), Donaldson (1958) and Whitfield (1959) and by careful attention to the relative positions of the recording apparatus and the interfering equipment, the avoidance of 'earth loops', and the use of efficient screening, artefacts arising from external fields can be reduced to any desired level.

4. The 'noise' which may be produced on the record when an electrical stimulator is used is considered separately from other interference of external origin, for, although the stimulator may indeed radiate electric and magnetic fields which can be dealt with by normal screening methods, this apparatus is distinguished from other sources of interference by its direct connection to the recording amplifier through the tissues.

Stimulators normally take the form of electrical pulse generators by means of which pulses of up to over a hundred volts are applied to the tissues to initiate the desired action potential. If a stimulus of only a few volts is necessary, and this is applied through closely spaced electrodes many centimetres from the recording site, the stimulus artefact may be so small that it actually serves a useful purpose by marking on the record the exact instant of stimulation. On the other hand, if an intense stimulus is applied through more widely spaced electrodes within some millimetres of the recording electrodes, sufficient energy may be transferred to the recording amplifier to overload it causing 'blocking', so that no signal, however strong, can be recorded for an appreciable time after the stimulus pulse. Responses of short latency may be lost in this blocked period or distorted by oscillations of the record baze line associated with the recovery of the amplifier from the overload. Under some circumstances difficulty may arise in distinguishing genuine responses from such recovery transients.

Thus, although in many investigations stimulus artefact is not a serious problem, it is potentially the most disabling of the three types of artefact and, at the same time, the most difficult to control. While it is not possible to assess the proportion of recordings which are completely prevented by excessive stimulus artefact since such attempts are seldom reported, implicit and explicit references to difficulties in stimulus artefact control are not uncommon in published work.

Over the past three decades many ingenious devices have been introduced for stimulus artefact reduction but, although each of these solutions is evidently very successful in the application for which it was developed, new apparatus and techniques are still being described in the literature. This suggests that existing remedies are being found inadequate and that, in general, the problem of stimulus artefact control has yet to be solved.

Such a conclusion was supported by experience at the Neurological Unit of the Department of Medicine at Edinburgh University where extreme difficulty was encountered in certain neuro-physiological recordings using existing anti-artefact devices. This situation prompted the investigation described in this thesis.

CHAPTER TWO

REVIEW OF THE LITERATURE

Considerable difficulties were experienced by early workers recording from the nervous system using 'single ended' recording amplifiers in which one of the input terminals was earthed. Interfering currents flowing through the tissues to the earthed recording electrode produced a voltage drop across this electrode which was recorded along with the signal. 'Hum' could be troublesome with such equipment and, especially when a stimulator was used having one of its output terminals also earthed, very severe stimulus artefacts could be produced. Under such conditions the stimulator and the recording amplifier were effectively coupled together through the common impedance of the earth connection to the tissues of the preparation.

Attempts were soon made to reduce this coupling by using two recording electrodes in addition to the earth electrode, connected to a 'balanced' amplifier, i.e. essentially two amplifiers connected in opposition at their outputs. The intention was that interfering potentials would produce equal 'in-phase' signals at the recording electrodes, and so cancel each other's effect at the output of the recording system, given a perfectly symmetrical balanced amplifier. At the same time, the wanted action potential could be arranged to produce a difference of potential at the two recording electrodes, often described rather loosely as an 'anti-phase' signal, and so be recorded.

Offner (1937) has shown that this solution was feasible with multi-stage amplifiers only if transformer coupling was used between stages, but with resistance-capacitance coupling the system may lead to overloading and intermodulation of the signal by large 'in-phase' interfering potentials.

The first amplifier to overcome this difficulty was that described by Matthews (1934) which has been erroneously referred to (Grundfest, 1950) as being of the early balanced amplifier type. In the Matthews circuit the two recording electrodes are connected to the grids of two similar triode amplifiers, the output being taken between the anode of the first triode and earth. The anode of the second triode is earthed so far as alternating currents are concerned so that this valve is effectively in the earthed anode, or cathode follower, configuration, and drives the cathode of the first triode and the floating battery supply. If equal potentials with respect to earth are applied to both grids forming a pure 'in-phase signal, the cathode follower action of the second valve ensures that both the cathode and the H.T. supply line of the first triode change in potential almost as much as its grid. A detailed study shows that the sensitivity of the circuit to 'in-phase' signals is very much less than that to 'anti-phase' signals so that a real rejection of the former is achieved.

Matthews' circuit thus bears a striking resemblance, functionally at least, to that developed by Toennies around 1936 and first published in 1938, which also makes use of a cathode follower to apply the signal from one recording electrode to the cathode of the valve which amplifies the signal from the other recording electrode. Again the output is taken from one anode and Toennies describes a potentiometer arrangement between this anode and the common cathode which may be used to compensate for the inherant unbalance of the circuit. Toennies 'Differential amplifier' may be regarded as an asymmetrical version of the circuit now known as the Long Tailed Pair (L.T.P.) amplifier in which two amplifying valves have a large resistance in their common cathode lead, the input being applied to their control grids and the output taken between their anodes. This circuit has formed the basis of all modern differential amplifiers and appears to have been described first by Blumlein in a British Patent applied for in July 1936. In the Long Tailed Pair circuit, in-phase signals are subject to heavy negative feedback due to the large cathode load resistance, while anti-phase signals, which produce equal and opposite changes in cathode current, are amplified in the normal way. The effectiveness of the circuit in rejecting in-phase signals is dependent on the use of a very high cathode load resistance and this originally required a high voltage negative supply line. An improvement was the introduction by Goldberg (1944) of the use of a pentode valve in place of the high resistance. This invention utilises the very high incremental resistance of the pentode with respect to the in-phase signals, while the relatively low direct current resistance of the valve eliminates the need for an excessively high voltage negative supply line.

A communication from the E.M.I. laboratories in 1946 showed that the effective resistance of a triode when used as the cathode load in an L.T.P. circuit could be considerably increased by feedback of the mean anode potential of the L.T.P. stage to the grid of this triode.

In his very general analysis published in 1947, Offner considered the balanced amplifier as a six terminal network, and distinguished four 'Gains' relating the potentials, with respect to earth, of the two output terminals to those of the two input terminals. These four gains may be defined as follows. For a pure anti-phase input, the 'Differential Gain' is the ratio of the anti-phase output component to the anti-phase input, this being the normal 'gain' of the amplifier, and the 'Differential Unbalance' is the ratio of the in-phase component of the amplifier output to the anti-phase input. Similarly, for a pure in-phase input, the 'Inversion Gain' is given by the ratio of the anti-phase output component to the in-phase input, and the 'In-phase Gain' is the ratio of the in-phase output component to the in-phase input. Offner concludes that the In-phase and Inversion Gains can be reduced to a low value by the use of sufficient in-phase negative feedback, even when the amplifier is asymmetrical to an appreciable extent. Thus, in the case of an L.T.P. stage, the use of a large common cathode load will give low In-phase and Inversion Gain even when the amplification factors of the valves are unequal. The paper goes on to show that in-phase negative feedback may be applied over several stages in a multi-stage amplifier but, although Offner has designed several amplifiers using this principle, the idea has not been widely adopted perhaps because, as Offner indicates, the system may lead to instability under certain circumstances. It can also be shown, using Offner's own equations, that the reduction in In-phase and Inversion Gain so produced will not be spectacular unless the In-phase Gain of the amplifier without feedback is considerable.

In the same year as Offner's publication, Johnston (1947) analysed the operation of the L.T.P. amplifier and proposed as a figure of merit the 'Discrimination Factor' which is the ratio of the Differential Gain to the Inversion Gain, using Offner's terminology. Johnston describes a differential amplifier which achieves a high Discrimination Factor without the use of balancing controls.

Parnum (1950) has criticised the use of Johnston's Discrimination Factor as a figure of merit for differential amplifiers and proposed instead the use of the ratio of Differential Gain to Inversion Gain, which he has called the 'Transmission Factor'. In his analysis of the L.T.P. amplifier he obtains an expression for its Transmission Factor, and recommends that a high value for this ratio can best be obtained by adjusting the effective amplification factor of the valves. His analysis also demonstrates that the attainment of a high Transmission Factor for the first stage of a multi-stage amplifier is a necessary but not sufficient condition for a high overall Transmission Factor. To overcome this difficulty Parnum suggests that the Transmission Factor of the first stage may be adjusted to compensate for the shortcomings of the remaining stages, and describes an amplifier for which a Transmission Factor of 50,000 is claimed. It seems unlikely that this claim will be valid, except over a restricted bandwidth, since a purely resistive circuit is assumed in the analysis and no compensation for the effects of stray capacitance is provided in the amplifier.

Andrew (1955) has investigated the possibility of making an amplifier of high Transmission Factor without the use of balancing controls and notes that Parnum's analysis shows that Johnston's amplifier cannot be relied upon to achieve this with components and valves of normal tolerances. He observes that Offner's analysis predicts that the necessary high Transmission Factor for the first L.T.P. stage in an amplifier can be achieved by increasing the resistance of the common cathode load sufficiently, and shows that this is apparently at variance with Parnum's result which leads to a finite value of the first stage Transmission Factor even when the cathode resistance tends to infinity. This discrepancy is resolved by Andrew's demonstration that Offner's result does not hold for the conventional Long Tailed Pair circuit unless certain implied conditions are fulfilled. Andrew proposes several modifications to the L.T.P. circuit for which Offner's analysis is approximately valid and shows that, if pentodes are used instead of triodes, a high Transmission Factor is predicted by the analyses of both Offner and Parnum. A circuit is described using pentodes for which a Transmission Factor of 30,000 is claimed, but which requires a floating battery supply for the pentode screen grids, so that Andrew concludes that the attainment of a high Transmission Factor without balancing controls, although possible, is not practicable.

In 1956 Richards considered the problem of L.T.P. amplifier design and, working from Parnum's analysis, showed that the all important high ratio of differential gain to inversion gain for the first stage could be obtained, for very large values of the 'tail' resistance, if the amplification factors of the 'pair' valves were made high enough. Thus, he confirmed Andrew's view that pentodes should be used in the L.T.P. Richards went on to consider the disadvantages of using pentodes in this type of amplifier and showed that these can be overcome by feedback to the control grid of their cathode load pentode of the mean anode potential of the two pentodes used in the Long Tailed Pair. In addition to increasing the incremental resistance of the cathode load valve, as shown by the E.M.I. laboratories for a triode cathode load, this expedient permits the use of conventional grounded supplies for the heaters and screen grids of the L.T.P. pentodes, so avoiding the difficulties encountered by Andrew.

The amplifier built using this circuit was shown by Richards to have a Transmission Factor of 2,500 without the use of balancing controls and largely independent of the effects of valve aging. When the characteristics of the valves used in the L.T.P. were balanced by differential control of their heater potentials, a Transmission Factor of 50,000 was achieved, and this over a bandwidth of 20 c/s to 10 kc/s, and for inputs up to five volts R.M.S. This circuit appears to represent the best design for a differential amplifier giving high rejection of in-phase signals published to date.

In spite of the enormous improvement in inherant rejection of in-phase signals achieved by the modern differential amplifier, it was found that their use in biological recording sometimes gave disappointing results in rejecting interference and stimulus artefact. In part this may be explained by the fact that the interfering potentials at the recording electrodes are seldom 'in-phase' to within a few parts in a hundred thousand, and, even if this were so, unless the recording electrode impedances are negligible compared with the amplifier input impedances, the potentials at the amplifier input terminals will have an 'anti-phase' component, so that the in-phase rejection under practical conditions will be less than that of the amplifier alone.

This phenomenon was illustrated by Haapanen, Hyde and Skoglund in 1953 when they demonstrated that the rejection of stimulus artefact in nerve recording could be equally unsatisfactory using amplifiers with in-phase rejection ratios nominally 2,000 and 30,000. The paper shows that the poor rejection of in-phase signals observed when recording from high resistance preparations such as excised nerve was due to the relatively low input impedance of the amplifiers. To overcome this defect, Haapanen (1951) developed a floating, single ended pre-amplifier, coupled to the main recording amplifier by a radio frequency link, and the 1953 paper shows this apparatus to be very effective in rejecting in-phase stimulus artefact potentials when used with nerve preparations. Trials of the apparatus on volume conductors, i.e. muscle and brain, were evidently less successful in artefact reduction due to the asymmetry of the unit's input impedances. Nevertheless, the authors advocate the general adoption of this type of input circuit in place of the conventional symmetrical input which they regard as superceeded.

The use of a floating amplifier with asymmetric input has also been described by Tommerdahl (1961) for electrocardiography. This equipment, which has a relatively restricted bandwidth, makes use of an iron cored transformer to couple the output of the floating pre-amplifier to the main amplifier. Guld (1960) has also suggested the use of a floating single ended amplifier.

While it will be argued (p.82.) that there is no peculiar advantage to be gained by the use of asymmetric input amplifiers in recording from volume conductors (c.f. Haapanen et alia) and that in many cases a symmetrical floating amplifier would give better results, there is no doubt that these attempts to obtain higher amplifier input impedance by using floating amplifiers represent an important advance in the design of recording systems for high effective rejection of 'in-phase' interference. It is perhaps surprising that the problem of amplifier input impedance, as it affects 'in-phase' rejection, has received so little attention in comparison with the development of the differential amplifier.

While great progress was being made in rendering recording apparatus insensitive to 'in-phase' potentials and thus to the voltage dropped across the earth electrode impedance when one terminal of the stimulator was earthed, the alternative approach to the problem had not been neglected. Thus it was early realised that if the stimulator could be used with neither terminal connected to earth a great reduction in the 'in-phase' component of the stimulating voltage at the recording electrodes would result. The desired isolation of the stimulus was first contrived by the use of an iron cored transformer, with an earthed interwinding screen, connected between the stimulator and its electrodes. While this measure was effective in insulating both stimulating electrodes from earth, complete isolation was not achieved due to the inevitable capacitance between the transformer secondary and earth. This capacitance, typically some 200 pF., allowed transient currents to flow from the stimulus site to the earth electrode at the start and finish of the stimulus pulse. These residual currents became known as the 'stimulus escape to earth', and, in addition to producing stimulus artefact, it was found that they could give rise to spurious stimulation at the earth electrode.

A major reduction in this residual stimulus escape was made possible by the introduction of the radio frequency (R.F.) isolating unit described by Schmitt(1948) and Schmitt and

Dubbert (1949). In this device an R.F. oscillator is modulated by the output of a conventional stimulator and the R.F. energy passed through an R.F. transformer to a rectifying circuit where a replica of the original stimulus pulse is produced. The stimulating electrodes are connected to the rectifying circuit and are thus connected to earth only through the capacitance to earth of this secondary circuit. The essential advantage of this R.F. unit is that the capacitance between the secondary of the R.F. transformer and earth may be made very much smaller than that obtainable with a conventional iron cored transformer. Some workers (e.g. Haapanen) have constructed such units with a capacitance from the secondary circuit to earth claimed to be as low as 2 pF., but it is considered doubtful (p.73.) whether such a low value could be maintained under conditions of actual use. Nevertheless, it should not be difficult to attain a total capacitance to earth of 5 to 10 pF. which is in the region of the figure claimed by the original authors. R.F. stimulus isolating units of this simple type have made possible quite spectacular reduction of stimulus artefacts, particularly in recording from nerve preparations, the application for which they were originally developed. However, the system suffers from several disadvantages which limit its use for other types of recording. In the form described by the inventors the R.F. unit has rather an inconvenient output impedance (around 5 kΩ), gives rather low power output, and has a tendency to radiate R.F. energy which may be rectified in the recording amplifier and produce an artefact thus defeating the purpose of the device. Amatniek (1959) has described a more elaborate R.F. unit with controlled output impedance and reduced R.F. radiation.

With the advent of transistors came the possibility of constructing a stimulator, and its battery power supply, in a relatively small space so that the whole apparatus has a correspondingly small capacitance to earth. Stimulators of this type have been described by George (1959) who has developed a circuit with a total capacitance to earth of around 50 pF., and Greer (1960) whose apparatus can be assembled from a number of sub-units. Although not attaining the very low capacitance to earth of an R.F. isolating unit, these transistor stimulators produce no unwanted R.F. radiation and can be made to have convenient output impedances. Both stimulators described have a maximum output of 20 volts which must be considered rather low for applications involving stimulation through the skin.

A novel way of reducing the stimulus escape to earth was introduced by Buchthal, Guld, and Rosenfalck (1955) and has been discussed further by Guld (1959, 1960). In this method a floating stimulator and its output leads are completely surrounded by a screen which is connected to the tissue through an extra electrode near the stimulating site. The capacitance to earth of the stimulating circuit is thus replaced by the capacitance to the additional screen so that the 'escape' current transients flow from the stimulating electrodes to the extra electrode rather than to the earth electrode. The inventors have shown (1955) that the method can result in a considerable reduction in that part of the artefact caused by the voltage developed across the earth electrode impedance by the stimulus escape currents, while imposing no restriction on the type of stimulator used. Thus, a stimulator for use with this system can be designed to have any desired output impedance and to have sufficient power for any application.

From time to time other remedies for stimulus artefact have been proposed which cannot be regarded as falling into the same category as any of the methods so far discussed. An early example was the method employed by Bishop (1927, 1928, 1929) in which the nerve under investigation was made to form one arm of a Wheatstone bridge circuit which was balanced so as to present no stimulating voltage to the recording apparatus. More recently Phillips (1956) has used a similar circuit to avoid artefact when recording from the brain. In this case the tissues formed two arms of the bridge and a resistive potentiometer making up the remaining bridge arms was adjusted for minimum artefact. The use of a 'Wagner earth' consisting of a potentiometer across the stimulator terminals with the slider of the potentiometer connected to earth has been proposed by Dickenson (1950) so that "... the output can be balanced to earth." Donaldson (1958) has proposed a more elaborate version of the same idea but warns that the Wagner earth system may result in spurious stimulation taking place at the earth electrode.

The use of the Wagner earth may be regarded as a Tripolar Stimulation scheme, a more explicit form of which is described by Bishop and Clare (1953). In this system the stimulating current is divided into two components which are applied through two anode stimulating electrodes and a common cathode electrode. The three electrodes are closely spaced so as to form a 'Tripolar' stimulating electrode. The relative magnitudes of the two components of the stimulating current are adjusted to position the resultant field in the tissue so as to give the minimum potential difference between the recording electrodes. A similar technique was used by Landau (1956) who used a Wagner earth across the output of the stimulator and noted that "... In addition, to control the shock artefact, it was useful to connect a variable resistance - capacity to ground from one or other stimulating lead." A rather more specific version of the same idea suggested by Bureš (1960) recommends that a variable resistance in series with a variable capacitance be inserted in the lead from the slider of the Wagner earth potentiometer to earth, and quotes a range of values for both resistance and capacitance.

In contrast to the number and variety of devices and methods which have been proposed for the reduction of stimulus artefact, there are relatively few published accounts of the mechanism of artefact production and of the theory underlying the various anti-artefact techniques. To a large extent the difficulty in any theoretical treatment of the subject centres on the representation of the tissues involved as part of the electrical system linking the stimulator and recording apparatus. A considerable simplification results if attention is confined to stimulation and recording from isolated nerve preparations. So far as stimulus artefact is concerned, a nerve, or nerve fibre, suspended in an insulating medium may be regarded as a one dimensional conductor the resistance of which can be as high as 10^7 ohms (Bureš, 1960). Treating the nerve in this way, Schaefer (1936) explained the 'Slow Capacitance Component' of the stimulus artefact obtained with a floating (battery operated) stimulator and a single ended recording system, as being caused by the current flowing along the nerve to earth, through the recording electrodes, to charge, and discharge, the capacitance to earth of the stimulator circuit. Petráň (1960) has stated that the time constant of the artefact observed experimentally is consistent with this explanation. A similar one dimensional resistive model of the isolated nerve was used by Haapanen et alia (1953) in their work on the artefact rejection of different recording amplifiers, and indeed the success of their R.F. recording unit is in part due to the validity of this model. Thus, treatment of the artefact problem so far as stimulation and recording from excised nerve is concerned, may be reduced to the analysis of a simple electrical circuit in which the stimulator and recording amplifier are connected by a line conductor of moderately high distributed resistance.

In work on the brain or muscle, the three dimensional nature of the tissue must be taken into account. The description of stimulus artefact given by Petráň (1960) points out that in volume conductors the stimulating current flowing in the tissues sets up an electric field characterised by tubes of electric flux and equipotential surfaces. Unless the recording electrodes lie in the same equipotential surface, a potential difference will be produced between them giving rise to the 'Resistive Component' of the artefact. This reference goes on to discuss the effect of external resistances connecting the stimulating and recording electrodes, in particular the effect of leakage resistance from recording and stimulating electrodes to earth, and indicates that these resistive pathways can be responsible for part of the 'Resistive Component' and for spurious excitation at the recording site. Unfortunately, in the English edition of this book, this part of the argument is somewhat vague.

The second artefact component proposed by Petráň is the 'Rapid Capacitance Component'. This is described as being due to capacitive connection between the stimulating and recording electrodes "....as in the case of the resistive component", although excluding, presumably, the indirect path

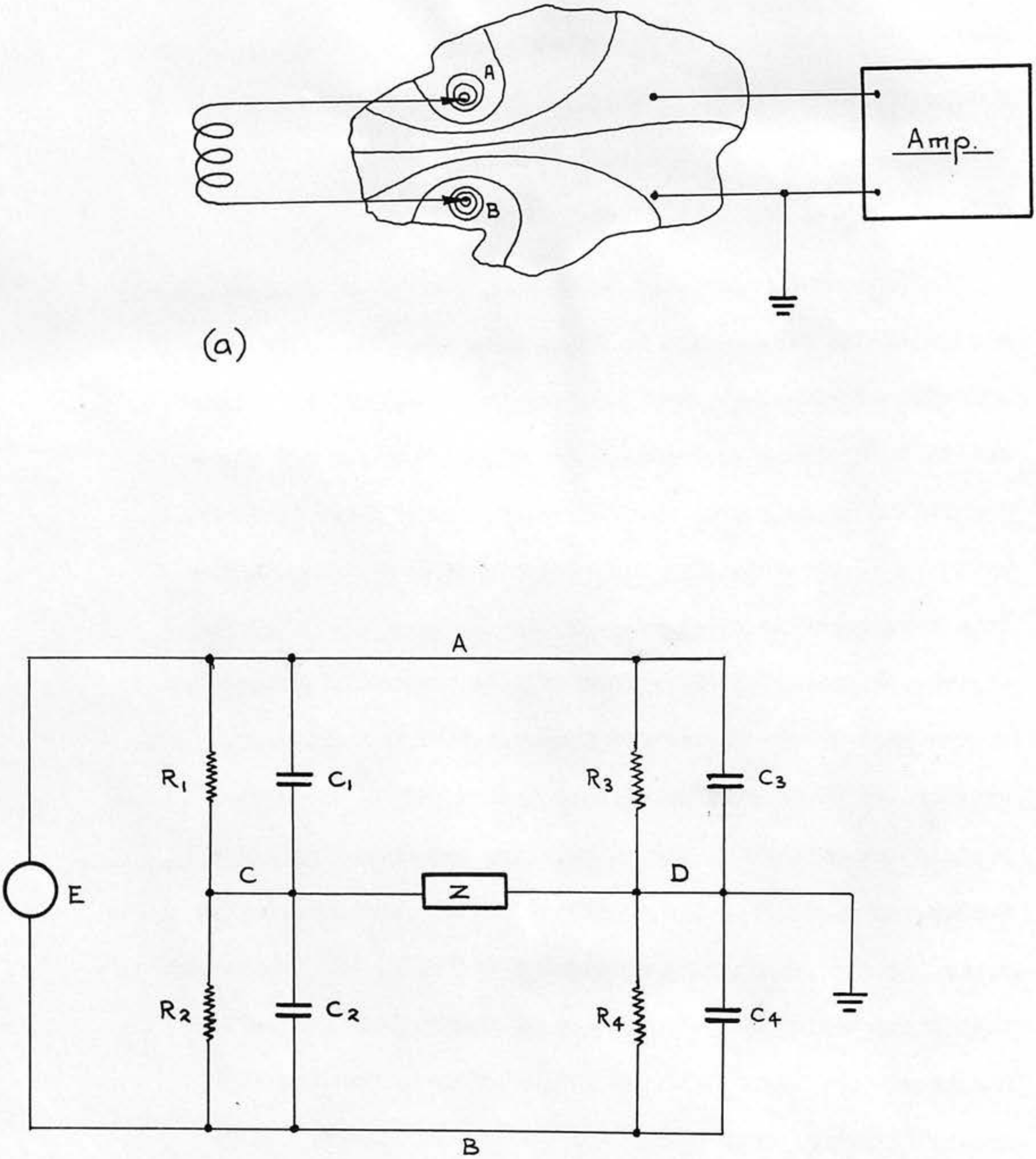

(a)

(b)

Fig 1.

via stimulator capacitance to earth, to which is assigned responsibility for the third 'Slow Capacitance Component' as described by Schaefer (1936). It seems unlikely that Schaefer's slow capacitance component would be important when recording from a volume conductor, as Petráň himself points out that an essential factor in its production is the relatively high longitudinal resistance of the excised nerve. The last artefact component distinguished by Petráň is the 'Polarization Component', stated to be caused by the slow decay of polarization potentials produced across the recording electrodes through which a portion of the current from an earthed stimulator has returned to earth. Although drawing attention to several factors involved in the production of stimulus artefact, Petráň's discussion can hardly be held to constitute a rigorous exposition of the problem.

Donaldson (1958) has given a description of stimulus artefact production in which the tissues linking the stimulator and recording apparatus are represented by a network of resistances and capacitances. The argument starts by recognising the system of equipotentials set up in the tissue by the stimulus current. A single ended recording system is then assumed, and it is suggested that, since the recording electrodes (one of which is also the earth electrode) are both intermediate in potential between the stimulating electrodes, the situation can be represented as a bridge circuit with the stimulator and recording amplifier connected across the diagonals of the bridge. Fig. 1 (a) shows the equipotential surfaces produced in the preparation by the stimulating current flowing between electrodes A and B. The recording electrodes C and D are thus intermediate in potential between A and B. Donaldson's bridge representation of the situation is shown in Fig. 1 (b). Here E represents

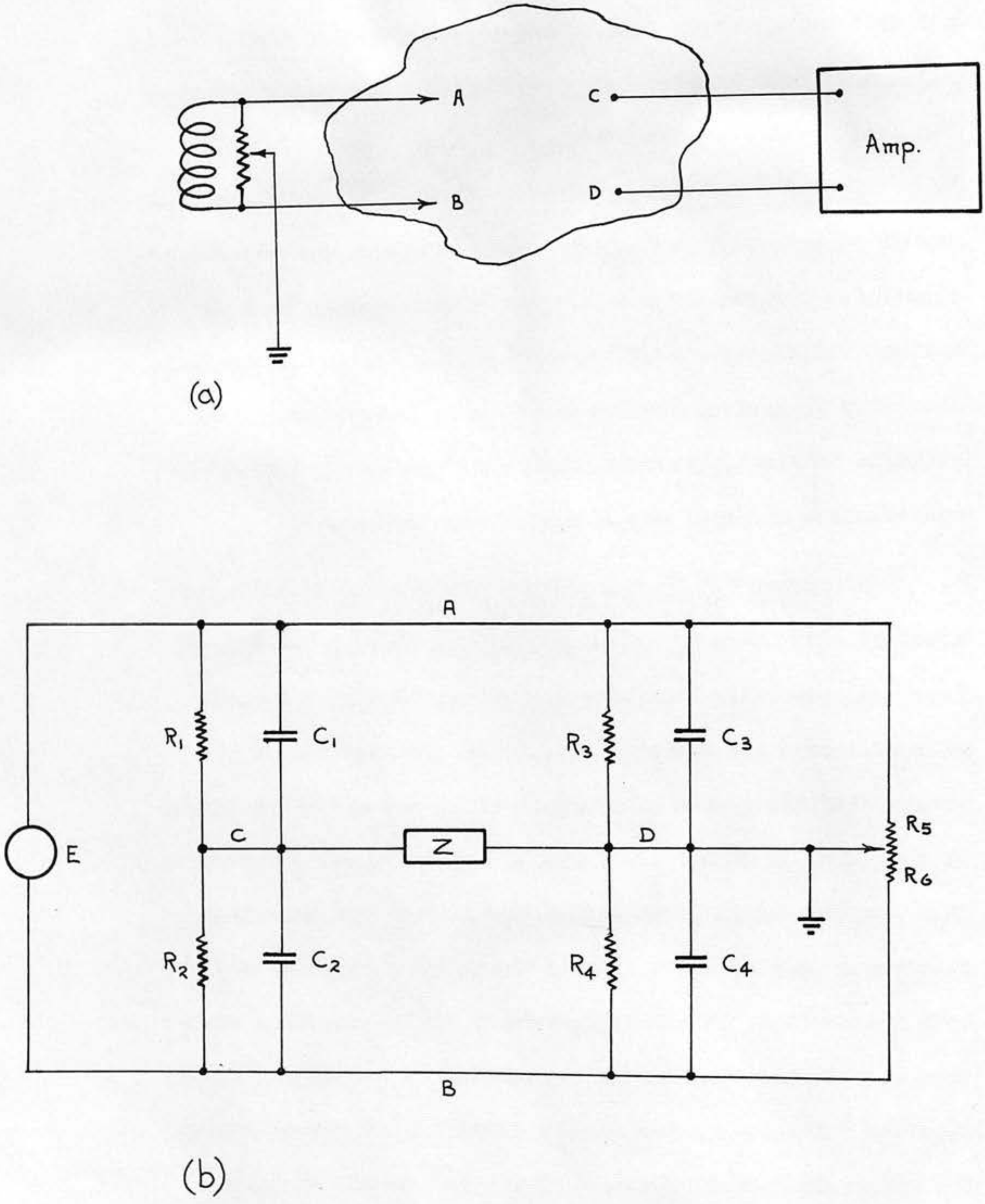

Fig. 2.

a constant voltage stimulator, R_1 and R_2, and R_3 and R_4 ensure that the potentials of C and D lie between those of A and B. C_1, C_2 and C_3, C_4 represent the capacitances between the stimulating and recording electrodes, and between the stimulating electrodes and earth. The recording amplifier is represented by its input impedance Z, "...assumed relatively large". Consideration of Donaldson's own argument reveals serious inconsistencies which must inevitably arise from the basic misconception inherant in this representation. Consider the discussion of the use of a Wagner Earth. Fig. 2 (a) shows a Wagner earth connected across the stimulator, and Fig. 2 (b) the equivalent circuit proposed by Donaldson. It is stated that the total resistance ($R_5 + R_6$) of the Wagner earth potentiometer is much lower than ($R_3 + R_4$), i.e. the resistances between each stimulating electrode and the earth electrode. The action of the Wagner earth is then explained as being due to the swamping action of R_5 and R_6 across the potential divider formed by R_3 and R_4 enabling this side of the bridge to be adjusted for 'R balance.' The argument implies that only the potential of D varies with respect to A and B when the Wagner earth is adjusted. Consideration of Fig. 2 (a) shows that, if R_5 and R_6 are very small compared with the resistances of the preparation, the earth electrode D will act as a third stimulating electrode, a point recognised by Donaldson, and adjustment of the Wagner earth will alter the field distribution in the preparation so changing the potential of C with respect to A and B, an effect which can be confirmed by experiment. On the other hand, the bridge representation of Fig. 2 (b) suggests that the potential of C with respect to A and B does not change with variation of R_5 and R_6.

Because of the risk of spurious stimulation Donaldson does not recommend the use of a Wagner earth in an attempt to 'balance the bridge', but stresses the importance of 'maximising the bridge arm impedances' to reduce the out of balance current flowing through the amplifier. The experimental fact that increasing the distance between the stimulating and recording sites leads to a reduction of the artefact is attributed to an increase in R_1 and R_2 in the 'bridge'. This explanation is inconsistent with the initial assumption that the amplifier input impedance Z is 'relatively large'. To produce an appreciable reduction in the current through Z (and in the voltage across it) the stimulating electrodes would have to be removed to such a distance from the recording site that R_1 and R_2, the resistances of the tissues between the stimulating and recording sites, become comparable to Z. Since Z is typically several megohms this condition is unlikely to be met in practice, so that the observed reduction in artefact cannot be explained in this way.

Again, under the heading of 'Maximising the bridge arm impedances', it is stressed that "...the stimulator output circuit should have no conductive connection to earth at all (other than the inevitable path through the preparation - maximum R_3 and R_4) and the minimum possible stray capacitance to earth (minimum C_3 and C_4)". While it is generally agreed that conductive or capacitive connection to earth from the stimulator should be avoided for minimum artefact, the implication that these steps are effective through 'maximising the bridge arm impedances' is misleading, for the resistances through the preparation from the stimulating electrodes to the earth electrode are typically only some thousands of ohms so that leakage paths from the stimulator to earth would have to have impedances low enough to be comparable to these

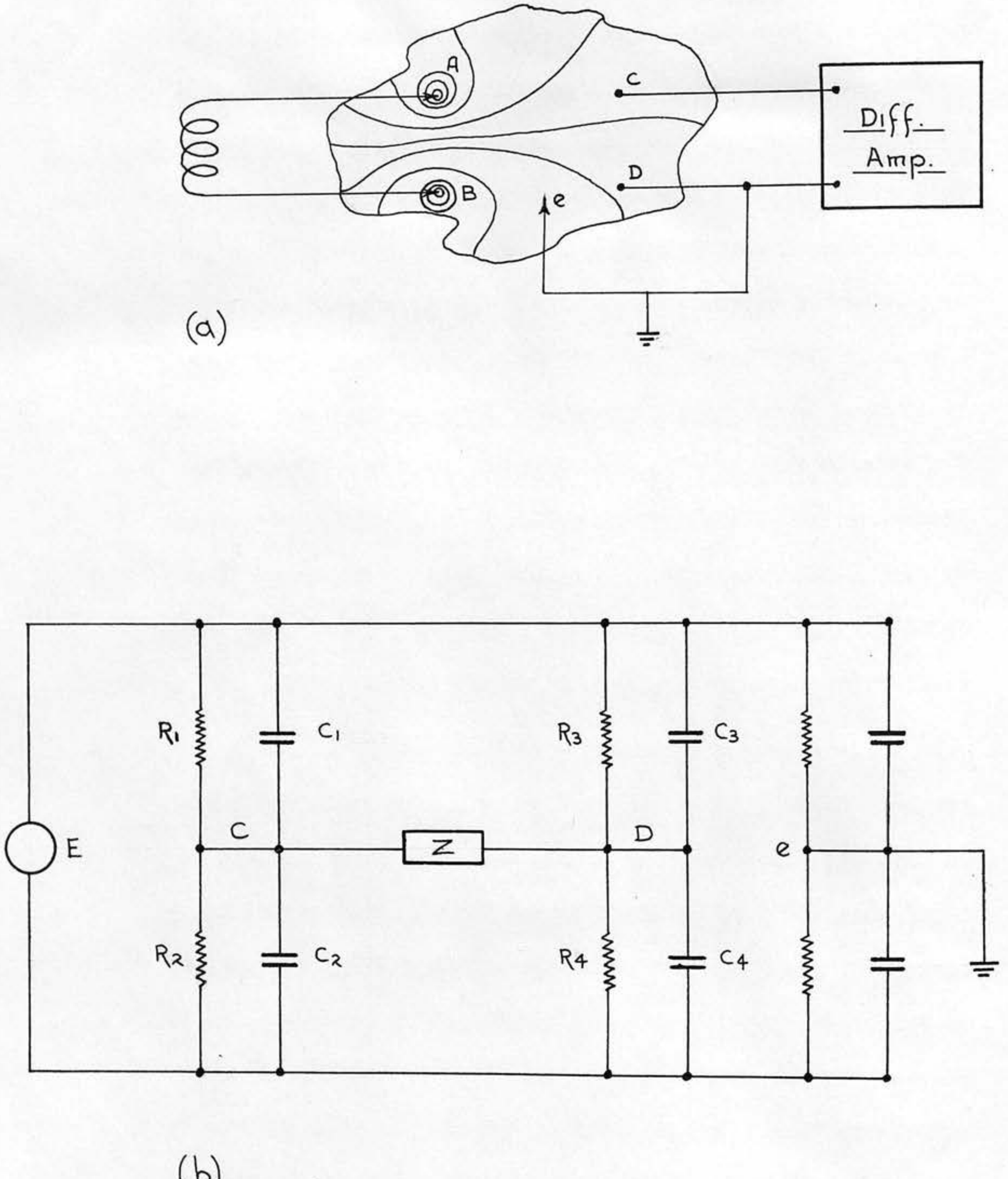

Fig 3.

tissue resistances before their effect would be appreciable. In practice, as the development of R.F. isolation units has shown, a very much higher standard of stimulator isolation is required.

If an attempt is made to extend the 'bridge' concept to include the more usual case when a balanced input amplifier is used, the shortcomings of this representation are even more evident. Presumably the situation would be shown as in Figs. 3 (a) and 3 (b). Any scheme which attempts to describe the situation in Fig. 3 (a) by an equivalent circuit of the form shown in Fig. 3 (b) must fail to explain why resistive and capacitive connection from the stimulator to earth can produce an artefact, since the currents flowing in such paths do not flow in the amplifier circuit in Fig. 3 (b).

It must be concluded that the use of a 'bridge' equivalent circuit as proposed by Donaldson cannot be regarded as forming the basis of a satisfactory theory of stimulus artefact, and it would seem that the same conclusion must be reached with regard to any theory based on the representation of a volume conductor as a network of lumped impedances. This view is in agreement with that of Guld (1960) who, in dealing with the conductive transmission of the stimulus through the tissue remarks that "...a lumped circuit representation is insufficient even for an approximate calculation of the interference".

Guld's paper sets out to deal with two of the possibilities for transmission of the stimulus to the amplifier input which are referred to as the 'Conductive Transmission of the Stimulus' and the 'Common Voltage Transmission of the Stimulus'. The first of these corresponds to Petráň's 'Resistive Component', and is treated as a three dimensional field problem. It is stated that an approximate value for the maximum voltage picked up by the recording electrodes due to this component can be found by applying simple field theory. The maximum value is given because the reduction effected by placing the recording electrodes on the same equipotential surface can seldom be utilised. It is shown that the artefact from this cause will be small if the spacing between the stimulating electrodes, and between the recording electrodes, are small compared with the distance between the stimulating and recording sites. The 'Common Voltage Transmission of the Stimulus' can be recognised as the component of the artefact due to the failure of the recording system to reject the voltage drop across the earth electrode impedance produced by the 'escape' currents flowing to earth via the stimulator/earth capacitance. This is analogous to Schaefer's 'Slow capacitance component' in nerve preparations, but, in contrast to the essential part played by the resistance of the nerve in Schaefer's analysis, Guld states that, when dealing with volume conductors, the resistance of the tissue may be neglected in comparison with the impedances of the electrodes. Thus field theory is not required in the treatment of this artefact component, and the system may be reduced to a network of lumped impedances and solved by ordinary network theory. In an earlier publication (Guld 1959) the network is shown in the form of a bridge circuit and the possibility of balancing the bridge by adjustment of the capacitances from each side of the stimulator to earth is discussed. The more recent work (1960) indicates that the dominant impedance in the path followed by the escape current is capacitive, and concludes that the common voltage artefact component will be proportional to the capacitance to earth of the stimulator, the rate of change of the stimulating voltage, the earth electrode impedance, the recording electrode impedance, and inversely proportional to the impedance to earth from the amplifier input terminals. Guld's work does not pretend to be a complete account of the mechanism of stimulus artefact production, and it may be argued that the results given will apply only very loosely in some cases, but they are at least consistent, and in qualitative agreement with experimental observation. The basic validity of this theory is further illustrated by the success of the ingenious scheme proposed by its author for the reduction of the 'Common Voltage Transmission of the Stimulus'.

It may be concluded that most of the work published on stimulus artefact has resulted from the efforts of the authors to control the artefact arising in connection with the particular biological investigation in which they were interested at the time. In this way many excellent techniques have been developed, but the very variety of solutions offered indicates that a method developed for one experiment may give disappointing results in another application.

Nevertheless, where isolated nerve preparations are concerned, the mechanism of stimulus artefact production seems to be sufficiently well understood, and the application of the R.F. techniques of Schmitt and Dubbert, and Haapanen, should give adequate control of the artefact in virtually every case.

The way in which the artefact is propagated in the more complex case involving a volume conductor preparation is evidently less well appreciated, and, although satisfactory artefact control is achieved in many special cases, notably by Guld, and by Phillips, no general solution or comprehensive treatment of the subject has been published to date.

CHAPTER THREE

APPROACH TO THE PROBLEM

The present work attempts to fulfil a three-fold objective:-

1. To develop a theory of stimulus artefact production which accounts for the salient features of the artefact as observed experimentally.

   Attention is confined mainly to the more general problem arising when the tissues under investigation have to be regarded ax a three dimensional conductor.

2. In the light of this theory, to examine possible anti-artefact techniques, consider the potentialities of existing devices, and, where necessary, to propose new apparatus and methods.

   Thus it is hoped to discover an 'optimum' stimulating and recording system capable of giving the maximum freedom from stimulus artefact compatible with normal electro-physiological requirements.

3. To develop apparatus to give substance to such an optimum system so as to demonstrate its technical feasibility.

CHAPTER FOUR

THEORY OF STIMULUS ARTEFACT

4 - 1 General Description

For the purpose of this discussion the stimulus artefact is defined as that part of the output of the recording apparatus which results from the transference of electrical energy from the stimulator to the recording apparatus via the preparation. This definition implies that the stimulator, preparation, and recording apparatus should be regarded as component parts of one unified system.

The most difficult part of this system to represent for analytical purposes is the preparation, and one of the simplest solutions is to regard it as a homogeneous and resistive conducting medium, bounded at an infinite distance from the electrodes. Using such a model, the behaviour of the preparation may be predicted by simple field theory as suggested by Guld (1960). Unfortunately, in many preparations the boundaries of the tissue cannot be regarded as being at infinity, the electrodes frequently being placed on the surface of the tissue. Again, the assumption of a medium of homogeneous electrical properties cannot usually be supported since the tissues concerned are often divided into regions of markedly differing conductivity. A further difficulty in the use of this simplest of models is that real tissue cannot always be assumed to be purely resistive. Membranes separating one region of the tissue from another are frequently polarizable by the passage of current through them, with the result that charges can be built up within the preparation which thus behaves as though it were 'reactive'.

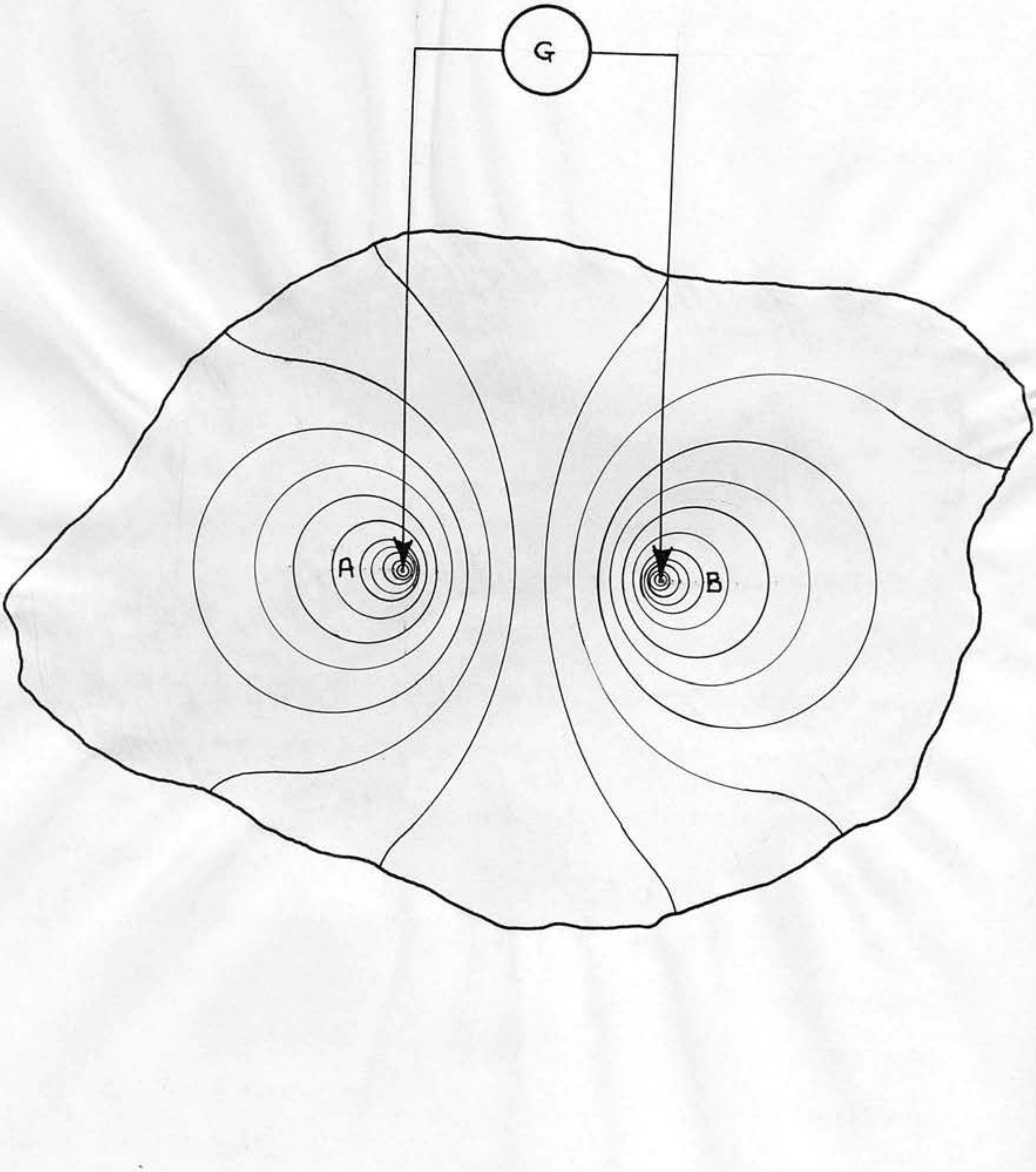

Fig 4.1.1.

In the interests of realism it is assumed in this work that the preparation must be represented by a conducting body which is neither infinite nor homogeneous, so that simple field theory cannot be used to predict the field distribution in the tissues. It is considered worthwhile to retain the figment of a resistive medium since this greatly facilitates the discussion and affects many of the conclusions to a negligible extent. The effect of tissue polarization will be discussed further where relevant.

One further point might usefully be considered before proceeding with the main argument, and this concerns the concept of electrode impedance.

Consider the situations shown in Fig. 4.1.1. A generator, G. passes a current through a volume conductor by means of electrodes A and B. The current flowing will be associated with an electric field in the volume conductor suggested by the isopotential surfaces indicated in the figure. For each value of this current flow the potential difference between A and B is fixed for a given pair of electrodes in given positions in the volume conductor. The 'resistance' of this pair of electrodes can thus be defined as the ratio of the potential difference between the electrodes to the current flowing. With most of the electrodes commonly used in biological recording, except microelectrodes, the major part of the potential drop between a pair of electrodes will occur in the volume conductor (tissue) rather than in the material of the electrodes proper, so that it is difficult to define accurately the resistance of a single electrode. However, where the dimensions of the electrodes are small compared with the distance between them, most of the potential difference between the electrodes will be

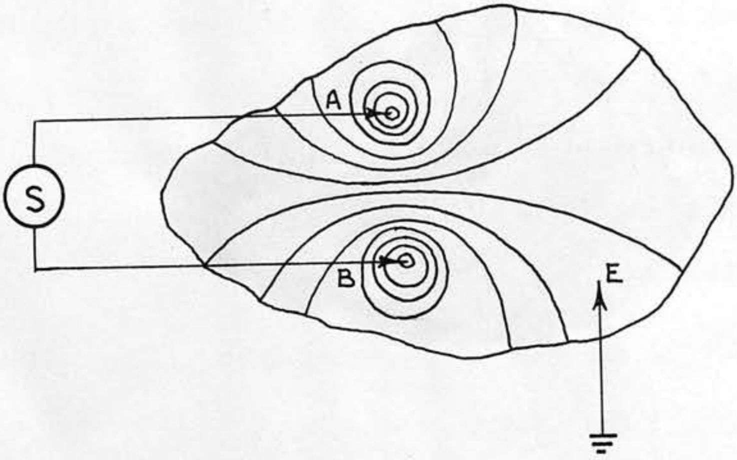

Fig 4.1.2.

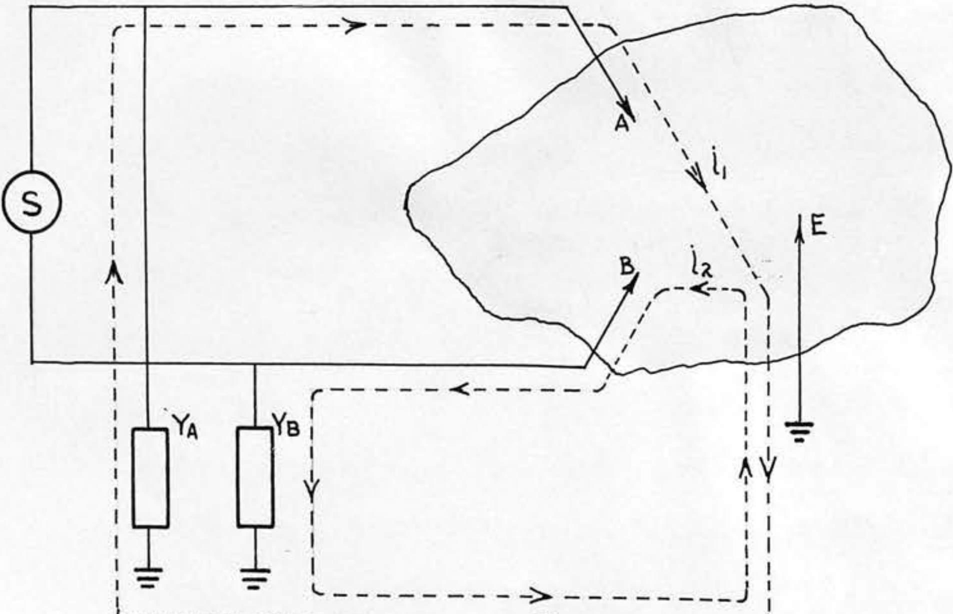

Fig. 4.1.3.

associated with regions of relatively high potential gradient immediately adjacent to the electrode surfaces. Under such conditions, for a given current flowing to or from one electrode, the potential difference between this electrode and any point in the volume conductor which is remote from the electrodes, and thus in a region of comparatively low potential gradient, will be substantially independent of the actual position of such a point. The ratio of this potential difference to the current flowing in the electrode may thus be regarded, albeit somewhat loosely, as the resistance of that electrode. This concept can be generalised to define the impedance of an electrode, and can effect a considerable simplification of the description of some artefact components.

Consider now the effect of connecting an earth electrode, E, to a preparation through which a stimulating current is being passed by a stimulator, S, and electrodes A and B as shown in Fig. 4.1.2. The stimulating current flowing in the preparation will be accompanied by an electric field in the tissues, again suggested by the isopotential surfaces sketched in the diagram. Due to its position in this field the earth electrode will have a potential intermediate between those of the stimulating electrodes. For convenience we may take the potential of earth as zero so that the potentials of A and B with respect to earth will be opposite in sign although not necessarily of equal magnitude.

Inevitably there will be some admittance to earth from the two sides of the stimulating circuit which may be taken into account by including in the circuit the admittances Y_a and Y_b as in Fig. 4.1.3.

The potentials of A and B relative to earth must result in currents i_1 and i_2 flowing in the circuits

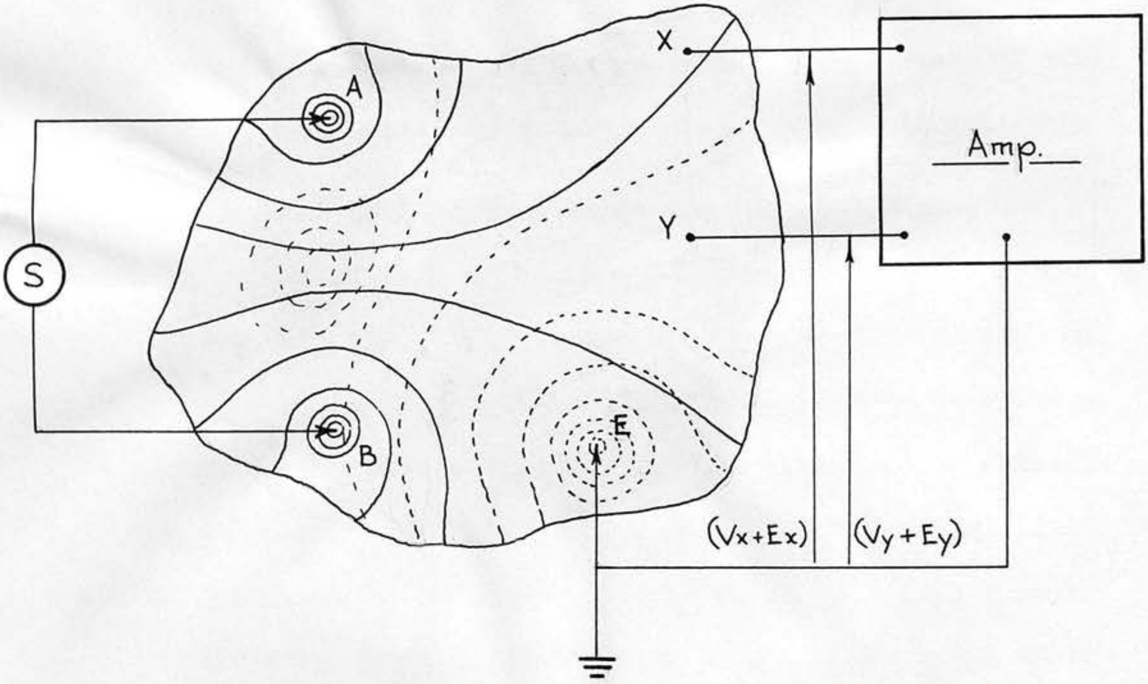

Fig 4.1.4.

A - Y_a - earth - E - A, and B - Y_b - earth - E - B respectively. These currents flow in opposite directions in the earth electrode and each must be associated with a corresponding field in the preparation. The waveforms of these currents will depend not only on those of the potentials of A and B with respect to earth, but also on the nature of the total impedance round the circuits in which they flow. For example, in many cases the dominant impedance in each path will be the relatively small capacitance to earth from each side of the stimulator circuit. In such cases the waveforms of the currents flowing in the earth lead may be very different from that of the stimulating current. This implies that the waveforms of the potential differences set up in the preparation by the fields of these earth currents will also differ markedly from those produced by the field of the stimulating current. Thus, although the three fields so far considered will combine to form one resultant field in the preparation, it will be convenient to resolve this resultant field into two components, viz. the 'Stimulus field' associated with the stimulating current itself, and the 'Escape field' being the resultant field obtained by combining the separate fields of the currents flowing in the earth lead. The distribution of the two fields will be of the form shown in Fig. 4.1.4. where the Stimulus field is shown by the full isopotentials and the Escape field by the dotted ones.

Fig. 4.1.4. also shows recording electrodes X and Y connected at arbitrary points in the preparation. Due to their positions in the Stimulus field the recording electrodes will have potentials V_x and V_y, with respect to earth, while the corresponding potentials due to the Escape field may be labelled E_x and E_y. In general X and Y will lie on

different isopotential surfaces of the Stimulus field so that V_x is not equal to V_y and a potential difference $(V_x - V_y)$ will be applied to the recording system. Similarly, the Escape field will produce a potential difference $(E_x - E_y)$ between the recording electrodes. Since the recording system is designed to respond to the difference of potential between the recording electrodes, an artefact component will arise due to the recording system response to each of these two inputs.

Unfortunately no practicable recording system can be entirely isolated from earth, so that a finite response will be obtained from any recording system when equal potentials are applied to both input terminals. Thus, even in the purely hypothetical case when X and Y are equipotential with respect to both the Stimulus and Escape fields, each field would still give rise to some response, so that two artefact components would again result.

The output of the recording system in the general case when the recording electrodes are situated arbitrarily in the Stimulus and Escape fields will thus be compounded of the response due to the intentional sensitivity of the system to differences of potential between the recording electrodes, and the unavoidable sensitivity to potentials common to both inputs.

To distinguish these responses it is convenient to subdivide the recording electrode potentials due to each of the two fields in the preparation into two components. Thus the potentials V_x and V_y due to the Stimulus field can be regarded as the resultant of a 'Common Mode' potential $\frac{Vx + Vy}{2}$ applied so that X and Y are each raised above earth potential by this voltage, and a 'Differential Mode' potential $\frac{Vx - Vy}{2}$ applied differentially, i.e. so that X and Y are at potentials of $\pm \frac{Vx - Vy}{2}$ respectively.

$$\text{Then} \quad V_x = \frac{Vx + Vy}{2} + \frac{Vx - Vy}{2}$$

$$\text{and} \quad V_y = \frac{Vx + Vy}{2} - \frac{Vx - Vy}{2}$$

Similarly, the input to the recording system due to the Escape field may be regarded as having a Differential Mode Component $\frac{Ex - Ey}{2}$ and a Common Mode Component $\frac{Ex + Ey}{2}$.

Since, in general, the recording system will respond differently to each of these four inputs, the system output will have four components. By definition the stimulus artefact is the output of the recording system due to these four inputs, so that the four major artefact components may be defined as follows:-

1. The Differential Direct Component is the output of the recording system representing its response to the Differential Mode Component of the potentials at the recording electrodes in the Stimulus field. This corresponds to the "Conductive Transmission of the Stimulus" referred to by Guld (1960).

2. The Common Direct Component represents the response of the recording apparatus to the Common Mode Component of the recording electrode potentials in the Stimulus field.

3. The Differential Escape Component is the system output resulting from the response of the recording apparatus to the Differential Mode component of the recording electrode potentials in the Escape field.

4. The Common Escape Component is the response of the

recording system to the Common Mode component of the recording electrode potentials in the Escape field.

This component is recognised as the 'Common Voltage Transmission of the Stimulus' mentioned by Guld (1960).

The resultant artefact is the sum of these four components. Since the artefact is the output of a system which can be regarded as a chain comprising the stimulator, preparation, and recording apparatus, it may be expected that the magnitude and waveform of the artefact will be a function of the properties of each link in this chain. Further, the effect on the resultant artefact of a change in any part of the overall system may depend on the characteristics of the remainder of the system. For example, the result of a change in the characteristics of the recording amplifier may depend on the properties of the recording, stimulating and earth electrodes, on the relative positions of the electrodes in the preparation, on the nature of the stray impedances to earth from the recording apparatus and stimulator, on the waveform of the stimulating current, and many other factors. Failure to take into account this interdependence between parts of the overall system may result in an incorrect assessment of the benefits to be expected from the incorporation of a new device into a system which differs appreciably from that for which the device was developed.

The next section sets out a quantitative treatment of the stimulus artefact problem. The usefulness of such a discussion lies not so much in enabling the prediction of the magnitude and waveform of the artefact, since in practice this would be difficult to achieve and confer very little advantage, but rather in that a quantitative theory brings out the unity of the system and illustrates the interrelation-

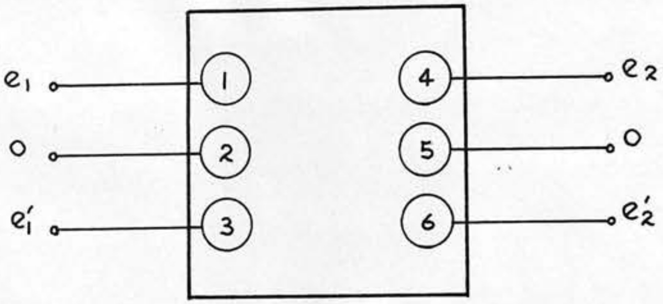

Fig 4.2.1.

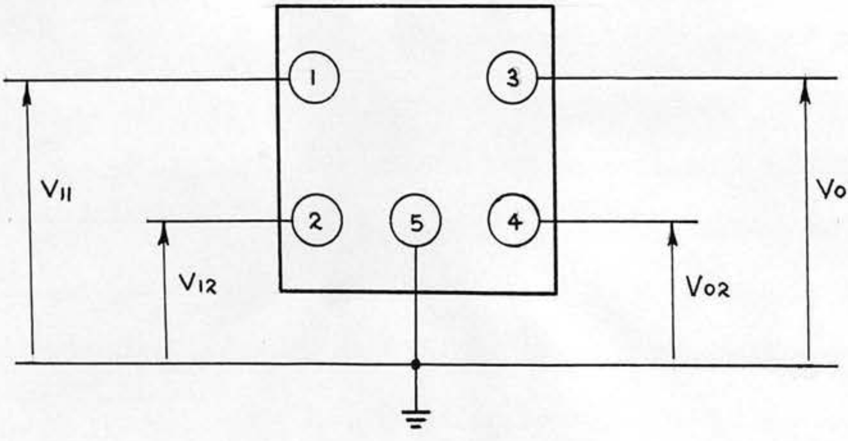

Fig 4.2.2.

ships of its component parts. The existence of a quantitative model also greatly facilitates the assessment of the effect of proposed modifications to the system and thus the selection of possible anti-artefact techniques.

4.2 Mathematical Representation of the System

The work of F.F. Offner forms a convenient starting point for a quantitative treatment of the mechanism of stimulus artefact. In his paper 'Balanced Amplifiers' (1947) it is shown that a push-pull amplifier can be represented as a six terminal network as in Fig. 4.2.1.

Input voltages e_1 and e_1' are applied to terminals 1,2 and 3,2 respectively, and output voltages e_2 and e_2' are developed between terminals 4,5 and 6,5. Four Gain Factors are defined relating the output voltages to the input voltages viz:-

1. Differential Gain $G_o = \frac{(e_2 - e_2')}{(e_1 - e_1')}$ for $e_1' = -e_1$ ...4.2.1.

2. In-phase Gain $G_c = \frac{(e_2 + e_2')}{(e_1 + e_1')}$ for $e_1' = e_1$ ...4.2.2.

3. Inversion Gain $G_i = \frac{(e_2 - e_2')}{(e_1 + e_1')}$ for $e_1' = e_1$ ...4.2.3.

4. Differential Unbalance $G_u = \frac{(e_2 + e_2')}{(e_1 - e_1')}$ for $e_1' = -e_1$ ...4.2.4.

For the present discussion this concept of four component Gains has been modified and extended as follows.

Since it is possible to measure potentials with respect to a single reference point which may be earth, the six terminal network may be replaced by a five terminal network without loss of generality. Further, the network may be considered not only as an amplifier, but as the complete recording system including the input electrode impedances and the stray impedances from the amplifier to earth. The recording system may then be represented as a five terminal network as shown in Fig. 4.2.2. The input terminals (1) and (2) are regarded as being at the tips of the recording electrodes, while the output terminals (3) and (4) are the points at which the output of the recording system is observed. In general both the input voltages V_{I1} and V_{I2} and the output voltages V_{O1} and V_{O2}, will be functions of time and, due to the imperfections of the recording system, the output voltages will not be the same functions of time as the input voltages. Thus an input of a given waveform will appear at the output of the recording system amplified but with its waveform altered to some extent. For this reason it is necessary to abandon the concept of simple Gains in connection with the recording system. The output voltages can still be expressed in terms of the input voltages if Laplace transform methods are used so that the Gains of the simpler treatment are replaced by transfer functions. It will also be convenient to express the input and output voltages in terms of their differential and common mode components.

The differential mode component of the network output voltage is then $\frac{V_{O1} - V_{O2}}{2}$ and the common mode component of the output voltage is $\frac{V_{O1} + V_{O2}}{2}$.

Similarly, the differential and common mode components of the input voltages are $\frac{V_{I1} - V_{I2}}{2}$ and $\frac{V_{I1} + V_{I2}}{2}$ respectively.

Appendix I defines four transfer functions for a five terminal network relating the transforms of the output voltages of the network to those of its input voltages as shown in Table 4.2.1.

TABLE 4.2.1.

Transfer Function	Definition
$M_{d(p)}$	$\dfrac{\frac{V_{o1(p)} - V_{o2(p)}}{2}}{\frac{V_{i1(p)} - V_{i2(p)}}{2}}$ for $V_{i2(p)} = -V_{i1(p)}$
$M_{v(p)}$	$\dfrac{\frac{V_{o1(p)} - V_{o2(p)}}{2}}{\frac{V_{i1(p)} + V_{i2(p)}}{2}}$ for $V_{i2(p)} = V_{i1(p)}$
$M_{u(p)}$	$\dfrac{\frac{V_{o1(p)} + V_{o2(p)}}{2}}{\frac{V_{i1(p)} - V_{i2(p)}}{2}}$ for $V_{i2(p)} = -V_{i1(p)}$
$M_{i(p)}$	$\dfrac{\frac{V_{o1(p)} + V_{o2(p)}}{2}}{\frac{V_{i1(p)} + V_{i2(p)}}{2}}$ for $V_{i2(p)} = V_{i1(p)}$

Since the output of a recording system is usually taken to be the potential difference btween the output terminals, only the differential mode component of the output voltages i~~f~~s of practical importance. The differential mode component of the output voltages of the system can be completely specified in terms of the differential and common mode components of the input voltages and two of the overall transfer functions for the system, $M_{d(p)}$ and $M_{v(p)}$, since

$$\frac{V_{o1(p)} - V_{o2(p)}}{2} = M_{d(p)} \frac{V_{i1(p)} - V_{i2(p)}}{2} + M_{v(p)} \frac{V_{i1(p)} + V_{i2(p)}}{2} \text{ ...... } 4.2.5.$$

To relate the transforms of the differential and common mode components of the recording system input voltages to the transforms of the stimulating and escape currents flowing in the preparation, four more transfer functions may be defined as in Table 4.2.2.

TABLE 4.2.2.

Transfer Function	Definition
$D_{d_{(p)}}$	$\dfrac{\dfrac{V_{11(p)} - V_{12(p)}}{2}}{I_{s_{(p)}}}$
$D_{e_{(p)}}$	$\dfrac{\dfrac{V_{11(p)} - V_{12(p)}}{2}}{I_{e_{(p)}}}$
$C_{d_{(p)}}$	$\dfrac{\dfrac{V_{11(p)} + V_{12(p)}}{2}}{I_{s_{(p)}}}$
$C_{e_{(p)}}$	$\dfrac{\dfrac{V_{11(p)} + V_{12(p)}}{2}}{I_{e_{(p)}}}$

Where:

$I_{s_{(p)}}$ = Transform of the Stimulating Current

$I_{e_{(p)}}$ = Transform of the Escape Current

These four transfer functions have the dimensions of impedance and are in fact transfer impedances which may be used to express the differential and common mode components of the recording system input voltages in terms of the two currents flowing in the preparation. For example, the differential mode input voltage due to the stimulating current is given by:-

$$\frac{V_{11(p)} - V_{12(p)}}{2} = D_{d_{(p)}} I_{s_{(p)}} \quad \ldots\ldots \; 4.2.6.$$

Finally, the transform of the escape current $I_{e_{(p)}}$ may be expressed in terms of the transform of the stimulating current $I_{s_{(p)}}$ by a transfer function $A_{(p)}$ such that:-

$$I_{e_{(p)}} = A_{(p)} I_{s_{(p)}} \quad \ldots\ldots \; 4.2.7.$$

The transforms of the four major artefact components can now be expressed in terms of the transform of the stimulating current thus:-

Transform of the
Differential Direct Component $= M_{d_{(p)}} D_{d_{(p)}} I_{s_{(p)}}$ .... 4.2.8.

Transform of the
Common Direct Component $= M_{v_{(p)}} C_{d_{(p)}} I_{s_{(p)}}$ .... 4.2.9.

Transform of the
Differential Escape Component $= M_{d_{(p)}} D_{e_{(p)}} A_{(p)} I_{s_{(p)}}$ .... 4.2.10.

Transform of the
Common Escape Component $= M_{v_{(p)}} C_{e_{(p)}} A_{(p)} I_{s_{(p)}}$ .... 4.2.11.

so that the transform of the resultant artefact is given by $E'_{(p)}$ where:-

$$E'_{(p)} = I_{s_{(p)}} \left[D_{d_{(p)}} M_{d_{(p)}} + C_{d_{(p)}} M_{v_{(p)}} + A_{(p)} \left(D_{e_{(p)}} M_{d_{(p)}} + C_{e_{(p)}} M_{v_{(p)}} \right) \right] \cdots 4.2.12.$$

The magnitude of the resultant artefact depends on the gain of the recording system (implicit in $M_{d_{(p)}}$ and $M_{v_{(p)}}$), so that it is usually more convenient to express the artefact in terms of an equivalent differential mode input signal at the recording electrodes. This may be done by dividing the above expression by a factor M_d, a number, representing the nominal gain of the recording system at the centre of its pass band.

The transform of the Equivalent Artefact $E_{(p)}$ is then:-

$$E_{(p)} = \frac{I_{s(p)}}{M_d} \left[D_{d_{(p)}} M_{d_{(p)}} + C_{d_{(p)}} M_{v_{(p)}} + A_{(p)} \left(D_{e_{(p)}} M_{d_{(p)}} + C_{e_{(p)}} M_{v_{(p)}} \right) \right] \cdots 4.2.13.$$

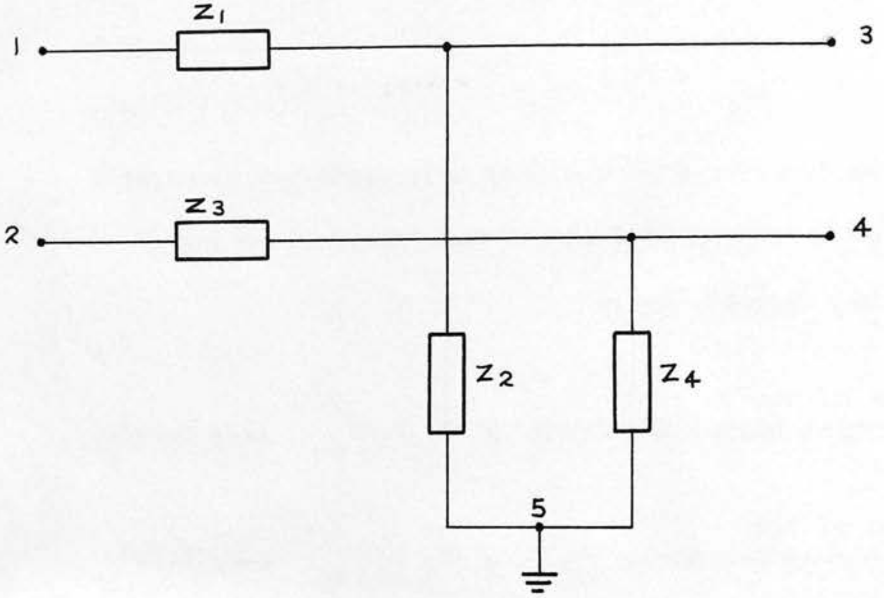

Fig 4.3.1.

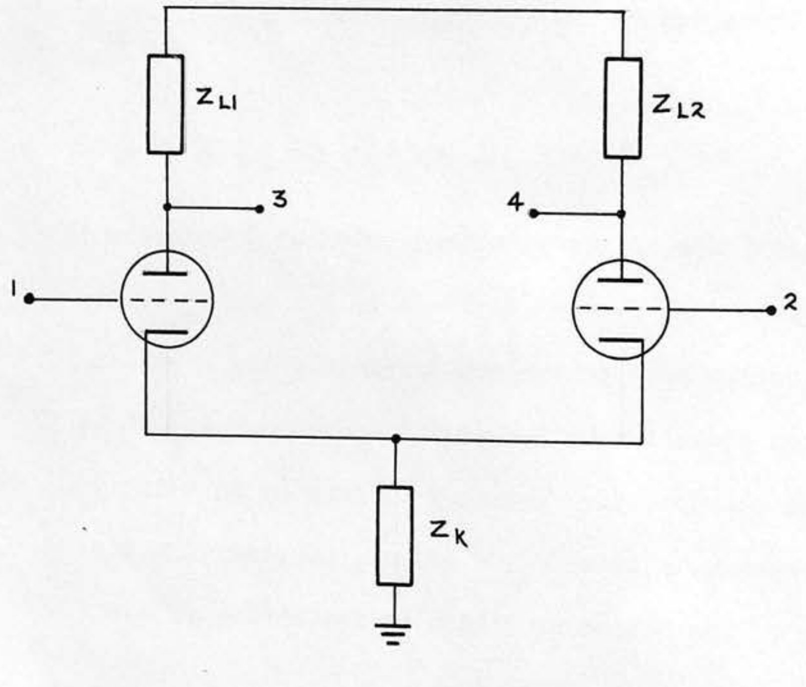

Fig 4.3.2.

Since the stimulating current as a function of time $I_{s_{(t)}}$ is known, $I_{s_{(p)}}$ may be found, so that, if expressions for the other transfer function on the right hand side of eqn. 4.2.13 can be derived, the Equivalent Artefact as a function of time, $E_{(t)}$, may be obtained by an inverse Laplace transformation.

In the next section the nature of these transfer funtions will be discussed in more detail.

4.3. The Nature of the Artefact Transfer Functions

(a) The four overall transfer functions of a network as complex as a complete recording system are inevitably very cumbersome expressions. However, the work involved in their derivation can be considerably reduced if the recording system is regarded as a chain of simpler five terminal networks in cascade. By suitable selection of these subnetworks, each can be made so simple that the four corresponding transfer functions can be derived with relatively little labour. For example, a passive network of four impedances as shown in Fig. 4.3.1. may be used to represent the impedances of the recording electrodes (Z_1 and Z_3) and the shunt impedances to earth from the recording amplifier input terminals (Z_2 and Z_4). Similarly, each Long Tailed Pair (L.T.P.) stage in a typical recording amplifier may be represented essentially as a five terminal network as indicated in the skeleton circuit shown in Fig. 4.3.2.

The relationship between the output and input voltages for each subnetwork can be expressed in two equations involving the four transfer functions for that network as in the case for the complete recording system. These two equations can be written in matrix notation so that a matrix having the four transfer functions for its elements can be associated with each subnetwork. A matrix formed from the four overall transfer functions of the complete recording system can then be calculated by matrix multiplication of the matrices of the subnetworks as shown in Appendix I

In the same appendix an example is given of the expansion of the overall transfer function matrix of a network formed from three subnetworks in cascade, showing that, even this relatively simple case, each transfer function of the overall system involves twelve of the transfer functions from the subnetworks. Fortunately, in the analysis of many practical systems further simplification can usually be achieved by making use of special properties of the subnetworks. Thus in evaluating the overall transfer functions for a recording amplifier consisting of cascaded LT.P. stages, negligible errors will usually arise from the assumption that the differential gain transfer functions $m_{d(p)}$ corresponding to the individual stages are very much greater than the other stage transfer functions $m_{v(p)}$, $m_{u(p)}$ and $m_{i(p)}$. For an amplifier of n such stages the overall transfer functions required become (Appendix I),

$$M_{da(p)} \doteqdot \left(m_{dn(p)}\, m_{d(n-1)(p)} \;\cdots\cdots\; m_{d2(p)}\right) m_{d1(p)} \quad \cdots\cdots \; 4.3.1.$$

and

$$M_{va(p)} \doteqdot \left(m_{dn(p)}\, m_{d(n-1)(p)} \;\cdots\cdots\; m_{d2(p)}\right) m_{v1(p)} \quad \cdots\cdots \; 4.3.2.$$

Where $M_{da(p)}$ and $M_{va(p)}$ are the overall transfer funtions of the amplifier and $m_{dr(p)}$ and $m_{vr(p)}$ are the transfer functions of the rth L.T.P. stage.

Use can also be made of the fact that, for a network of four impedances as shown in Fig. 4.3.1., $m_{d(p)} = m_{i(p)}$ and $m_{u(p)} = m_{v(p)}$, so that only two of the four transfer functions need be evaluated.

These results can be used to write down the overall transfer functions of a typical recording system consisting of a network of four impedances representing the recording electrode impedances and the amplifier input impedances, followed by an amplifier of cascaded L.T.P. stages. The overall transfer functions $M_{d_{(\rho)}}$, $M_{i_{(\rho)}}$, etc. are given by:-

$$\begin{bmatrix} M_{d_{(\rho)}} & M_{v_{(\rho)}} \\ M_{u_{(\rho)}} & M_{i_{(\rho)}} \end{bmatrix} = \begin{bmatrix} M_{d\alpha(\rho)} & M_{v\alpha(\rho)} \\ M_{u\alpha(\rho)} & M_{i\alpha(\rho)} \end{bmatrix} \begin{bmatrix} m_{d_{(\rho)}} & m_{v_{(\rho)}} \\ m_{u_{(\rho)}} & m_{i_{(\rho)}} \end{bmatrix} \quad .... \; 4.3.3.$$

where $m_{d_{(\rho)}} \ldots m_{i_{(\rho)}}$ are the transfer functions of the electrode input impedance network.

Expanding equation 4.3.3. we obtain:-

$$\begin{aligned} M_{d_{(\rho)}} &= M_{d\alpha(\rho)}\, m_{d_{(\rho)}} + M_{v\alpha(\rho)}\, m_{u(\rho)} \\ &= M_{d\alpha(\rho)}\, m_{d_{(\rho)}} + M_{v\alpha(\rho)}\, m_{v(\rho)} \quad \text{Since } m_{u_{(\rho)}} = m_{v_{(\rho)}} \\ &\doteq M_{d\alpha(\rho)}\, m_{d_{(\rho)}} \ldots 4.3.4. \quad \text{Since } M_{v\alpha(\rho)} \ll M_{d\alpha(\rho)} \text{ and } m_{v_{(\rho)}} < m_{d_{(\rho)}} \end{aligned}$$

and

$$\begin{aligned} M_{v_{(\rho)}} &= M_{d\alpha(\rho)}\, m_{v_{(\rho)}} + M_{v\alpha(\rho)}\, m_{i(\rho)} \\ &= M_{d\alpha(\rho)}\, m_{v_{(\rho)}} + M_{v\alpha(\rho)}\, m_{d_{(\rho)}} \quad .... \; 4.3.5. \quad \text{Since } m_{i_{(\rho)}} = m_{d_{(\rho)}} \end{aligned}$$

Thus to evaluate the overall $M_{d_{(\rho)}}$ and $M_{v_{(\rho)}}$ functions for such a recording system we require expressions for $M_{d\alpha(\rho)}$ and $M_{v\alpha(\rho)}$ for the amplifier and $m_{d_{(\rho)}}$ and $m_{v_{(\rho)}}$ for the electrode/input impedance network.

Using equations 4.3.1. and 4.3.2. the transfer functions of the amplifier can be calculated from those of its individual L.T.P. stages. The transfer functions for an

L.T.P. stage are derived in Appendix II

The transfer functions for the network formed by the recording electrode impedances and the amplifier input impedances depend on the exact nature of the four impedances involved. The input impedances of the amplifier may be represented by a shunt combination of resistance and capacitance, the values of which vary over wide limits from one recording amplifier to another. The resistive component may lie in the range from a few megohms to some thousands of megohms when special precautions are taken to attain a high input resistance. Similarly, the capacitance to earth from the amplifier input terminals may range from less than 1pF when cathode follower input probes are used, to several hundred pF when more than a few feet of screened cable is used to connect the recording electrodes to the amplifier.

The accurate representation of the impedances of recording electrodes in tissue or saline presents considerable difficulty and has been the subject of much discussion as recently as 1959 (Proc. 2nd Int. Conf. Medical Electronics 1959 p. 96). Much of this discussion has been based on the work of Frike (1932) and Cole (1934) on the polarization impedance of biological materials. Using this approach the impedance of most polarizable electrodes in tissue or saline can be expressed as:-

$$Z_{(\omega)} = R + Z_1(j\omega)^{-\alpha} \;\ldots\ldots\; 4.3.6.$$

giving the impedance at any angular frequency in terms of the impedance at $\omega = 1$, and a constant, α, lying between zero and unity and depending on the type of electrode and electrolyte considered. The form of this equation implies that the electrode impedance may be considered as a

Fig. 4.3.3.

resistance R in series with a parallel combination of resistance and capacitance, say R_p and C_p, representing the polarization component of the impedance $Z_1(j\omega)^{-\alpha}$, where both R_p and C_p are functions of ω. Weinman and Mahler (1959) have shown that when a constant current is suddenly applied through an electrode obeying this law the voltage drop across the electrode should rise instantly to a value corresponding to the purely resistive component of the electrode impedance R, and then increase according to t^{α} until the polarization voltage for the electrode is reached when the voltage drop across the electrode will remain constant until the removal of the current.

In the course of the present work the impedances of a variety of electrodes have been studied by passing a rapidly rising pulse from a constant current source (3µ Sec rise time, 24 MΩ output impedance) through the electrode concerned into skin, muscle, brain or 0.9% saline solution, and observing the voltage drop across the electrode on an oscilloscope. Where high impedance electrodes were being investigated the connection to the oscilloscope was made via a cathode follower. Electrodes examined included types used for stimulation, recording, and as earth electrodes, varying in size from enamelled steel needles with an exposed tip of 10 - 15µ in diameter, to metal plates approximately 3 x 4 cm., electrode materials being steel, silver and platinum. All electrodes with clean metallic surfaces showed a voltage drop having fast and slow phases corresponding to the resistive and polarization components of the electrode impedance. Such fast and slow rising and falling phases can be seen in Fig. 4.3.3. which is an oscillogram of the voltage drop across a stainless steel electrode carrying a 200 µ Sec. current pulse into saline solution.

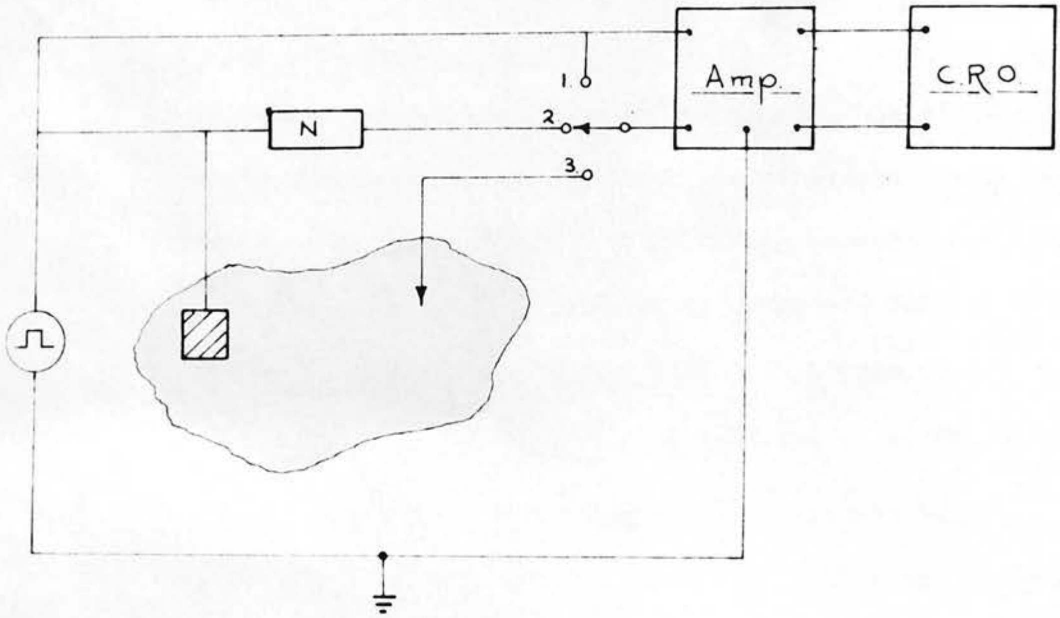

Fig 4.3.4.

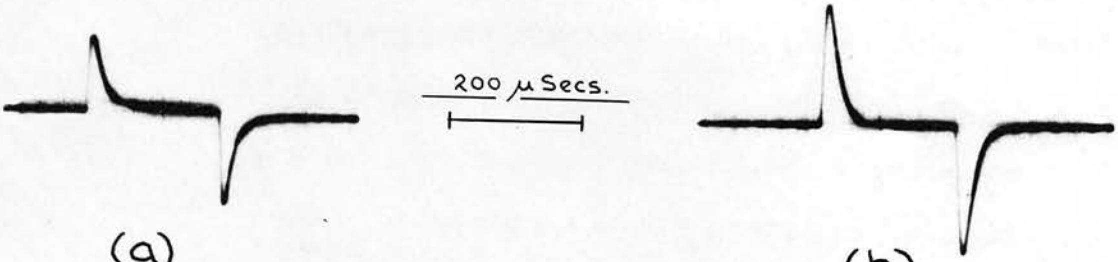

(a)

(b)

Fig. 4.3.5.

While these experiments confirmed that the resistive component of the electrode impedance varied as expected with electrode area and electrolyte conductivity, the polarization component of the impedance of practical electrodes in tissue was found to be less predictable than might be expected from Weinman and Mahler's work on electrodes in saline solutions. The polarization component of the electrode voltage drop tended to a limit for long pulses of current at sufficient current density, but the waveform of this component was not found to be always in accordance with a t^{α} law. Indeed the actual waveform observed for the slow component of the volts drop was found to vary with the type of tissue or electrolyte in which the electrode was immersed, with the previous history of the electrode, and with the current density. For this reason it was decided to compare electrodes with possible models directly under actual conditions of use.

The arrangement used for studying the impedance of recording electrodes is shown in Fig. 4.3.4. A pulse generator was used to inject rapidly rising (rise time 1 - 3 μ Sec.) voltage pulses into one of the input terminals of the recording amplifier directly, and into the other input terminal, either via the electrode under examination, or through the network representing the model electrode. The output of the amplifier was observed and photographed on an oscilloscope. The amplifier used will be described in Chapter six and was specially developed to have a response to a common mode step function input less than a millionth of its response to an equal step function input applied differentially . With the switch in position 1 and both amplifier inputs connected directly to the pulse generator, the response to injected pulses less than a few volts in amplitude was below the amplifier noise level. Thus any response obtained for such inputs with the switch in positions 2 or 3 was due to the m_v transfer function of the network comprising the real, or model electrode, and the amplifier input impedances. Figs. 4.3.5. (a) and (b) show the responses obtained when an electrode made by electrolytically thinning a steel sewing needle and enamelling it to leave only a 10 - 15 μ tip exposed (a), was compared with a 100 KΩ resistor (b). The similarity of these responses obtained under working conditions suggests that for evaluating the response of a recording system using such electrodes the actual electrodes may be represented by pure resistances. Similar 'resistive' behaviour was observed for all non-polarizable electrodes e.g. Ag/AgCl. balls for cortical recording, and for all 'small' polarizable electrodes such as the enamelled steel needle described above. It was found that larger steel electrodes may be rendered resistive, temporarily, by passing an alternating current through them in saline solution until a brown discolouration was seen on the steel surface.

The impedance of the electrodes used for stimulating and recording on the surface of the skin in this laboratory was found to vary considerably with the method used to prepare the skin under the electrodes. When the skin under a 1 cm. diameter silver plate electrode was thoroughly cleaned with ether the impedance of the electrode was essentially resistive and usually between 10 and 15 kΩ. If the underlying skin was abraided to remove the horny layer and electrode jelly applied, the impedance fell to around 250Ω, still virtually resistive. The use of electrode jelly merely rubbed well into the skin as recommended by the makers usually resulted in an electrode impedance which could be represented by a resistance in parallel with a capacitance such that the

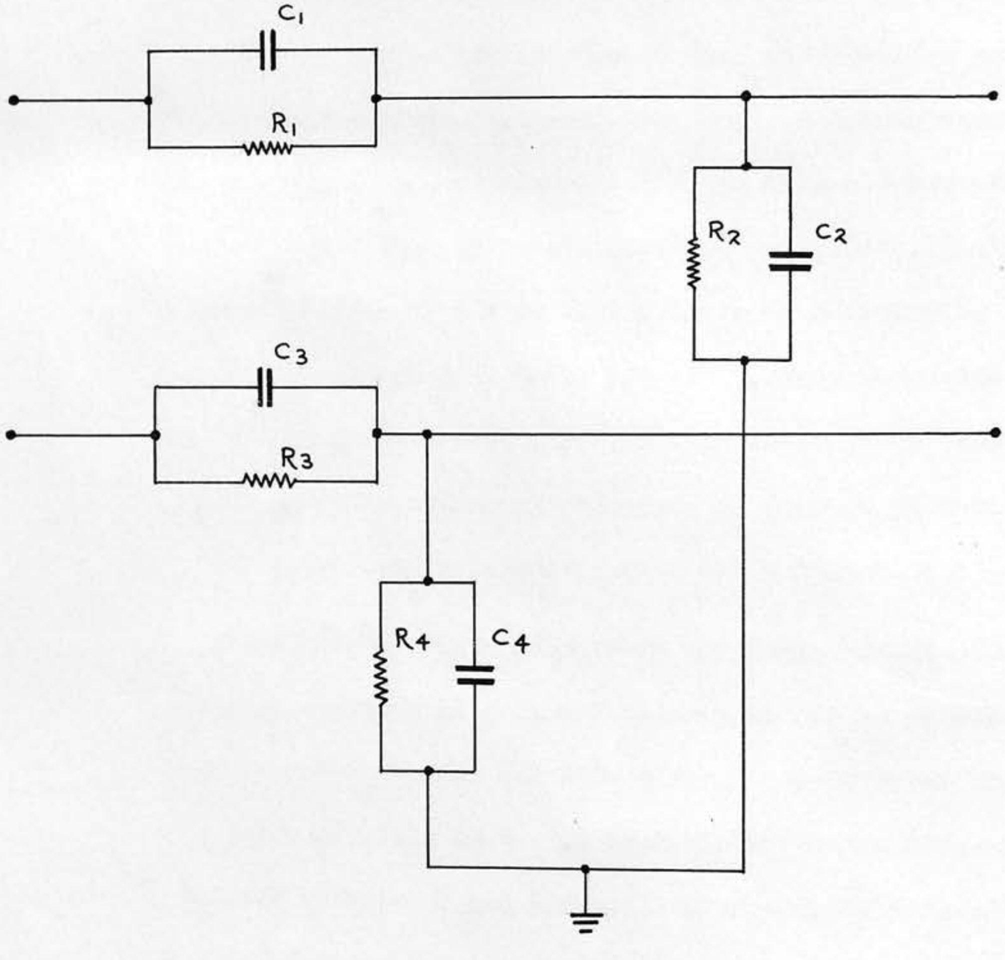

Fig 4.3.6.

time constant remained nearly constant at around 1 millisecond while the resistance varied from 1 to 10 kΩ depending on the area of skin prepared.

Thus it was found that most electrodes investigated could be simulated by either a resistance, or a parallel combination of resistance and capacitance.

A four impedance network as shown in Fig. 4.3.6. can therefore be used to represent the electrode source impedances and amplifier input impedances. The transfer functions of such a network are derived in Appendix III and are again rather cumbersome expressions. If, as is permissable in many cases, the electrode impedances can be regarded as being purely capacitive, the transfer functions are greatly simplified becoming:-

$$M_{d_{(p)}} = M_{i_{(p)}} = \frac{1}{2}\left[\frac{T_{12}\left(p + \frac{1}{T_{12}}\right) + T_{34}\left(p + \frac{1}{T_{34}}\right)}{T_{12}\,T_{34}\left(p + \frac{1}{T_{12}}\right)\left(p + \frac{1}{T_{34}}\right)}\right] \quad \cdots\cdots \quad 4.3.7$$

AND

$$M_{v_{(p)}} = M_{a_{(p)}} = \frac{1}{2}\left[\frac{\left(T_{34} - T_{12}\right)p}{T_{12}\,T_{34}\left(p + \frac{1}{T_{12}}\right)\left(p + \frac{1}{T_{34}}\right)}\right] \quad \cdots\cdots \quad 4.3.8$$

where $T_{12} = R_1C_2$ $\qquad T_{34} = R_3C_4$ (Fig. 4.3.6.)

Similarly simplified expressions are also given in Appendix III for the transfer functions applicable where the electrodes can be represented by a shunt combination of resistance and capacitance as in the case of many skin surface electrodes.

Taking these transfer functions for the recording electrode/amplifier input impedance network, together with the transfer functions for the amplifier proper, equations 4.3.4. and 4.3.5. can be used to obtain the overall transfer functions $M_{d_{(p)}}$ and $M_{v_{(p)}}$ for the complete recording system.

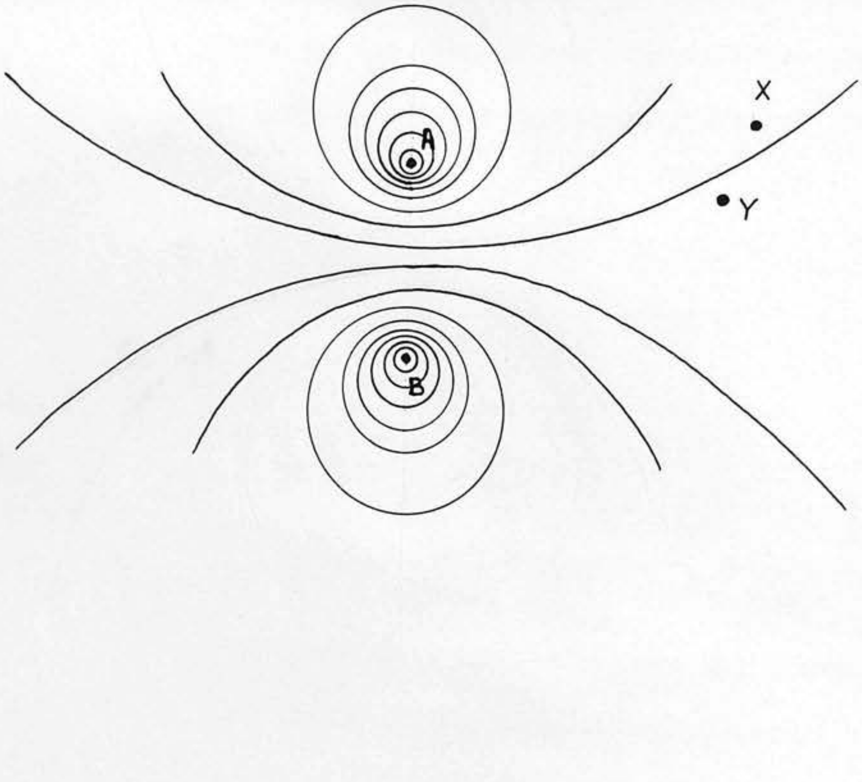

Fig. 4.3.7.

The Transfer Functions $D_{d(\rho)}$, $D_{e(\rho)}$, $C_{d(\rho)}$ and $C_{e(\rho)}$

The magnitudes of these transfer functions relating the differential and common mode components of the recording electrode potentials to the stimulating and 'escape' currents will be proportional to the resistivity of the medium concerned, i.e. on the type of tissue involved. They will also depend, to some extent, on the size and shape of the preparation used and, for a given preparation, will be functions of the sizes and geometrical arrangement of the stimulating, recording, and earth electrodes.

(i) $D_{d(\rho)}$ relates the differential component of the voltages at the recording electrodes to the stimulating current producing it. The magnitude of $D_{d(\rho)}$ will depend on the strength of the field set up by the current flowing between the stimulating electrodes and on the positions of the recording electrodes in this field.

The situation may be illustrated with reference to Fig. 4.3.7. where A and B represent the stimulating electrodes and X and Y the recording electrodes lying in the stimulus field. When the stimulating electrodes are very close together the strength of this field will be very nearly proportional to the distance A B. The magnitude of $D_{d(\rho)}$ under such conditions will also be proportional to the stimulating electrode separation. Similarly, $D_{d(\rho)}$ will be proportional to the recording electrode spacing X Y when this is very small. As the spacing of the stimulating and recording electrode pairs increases this proportionality is lost so that the practical effect of a given electrode arrangement can best be visualised with the aid of field diagrams like Fig. 4.3.7. from which it may be seen that the voltage picked up between the recording electrodes, and hence the magnitude of $D_{d(\rho)}$, can be positive, negative, or zero according to the relative positions of X and Y in the stimulus field.

Since alteration of the spacing and orientation of the stimulating and recording electrodes within the ranges used in electrophysiological recording can effect a change of several orders of magnitude in the recorded voltage, a 'typical' value for $D_{d(\rho)}$ cannot usefully be given. Nevertheless it was felt worthwhile to establish the range of values of $D_{d(\rho)}$ likely to be encountered in practice. Since the lower end of this range is clearly zero a series of observations were made to find the order of the maximum values of $D_{d(\rho)}$ which might be met with under various recording conditions.

Measurements were made using a variety of stimulating and recording electrode arrangements in muscle and brain tissue in the anaesthetised rabbit and guinea pig, and on the skin surface of human limbs. In each case current pulses from a constant current generator (the stimulator described in Chapter Six) were passed through the tissues between the stimulating electrodes and the voltage at the recording electrodes observed with the special amplifier described in Chapter Six.

Although values of $D_{d(\rho)}$ of 0.05Ω (i.e. 50 µV/mA) or less were found when both stimulating and recording electrodes had spacings of around 1 mm and the stimulating and recording sites were separated by a distance of about 25 mm in muscle or brain tissue, a maximum value of 20Ω (20 mV/mA) could be obtained in the rather extreme case when the stimulating and recording electrodes were arranged at the corners of a 5 mm square on the cerebral cortex or surface of exposed muscle.

Values up to 50Ω were observed when stimulating and recording on the surface of the skin of the human limbs.

(ii) $D_{e_{(\rho)}}$ relates the differential component of the recorded voltage produced by the escape current to the value of the current. The escape current flows from the stimulating site to the earth electrode, usually a considerably greater distance than does the stimulating current flowing between the stimulating electrodes. This implies a higher field strength per unit of escape current so that values of $D_{e_{(\rho)}}$ are generally somewhat greater than those of $D_{d_{(\rho)}}$. Experiment confirmed that this was so, maximum values of $D_{e_{(\rho)}}$ of up to 60Ω being observed in brain, muscle, and skin preparations.

(iii) $C_{d_{(\rho)}}$ relates the common mode component of the recorded voltage to the value of the stimulating current producing it. Where the recording electrodes are separated from the earth electrode by several centimetres, as is often the case, and especially if either the recording electrodes or the earth electrode are near to the stimulating electrodes, the magnitude of $C_{d_{(\rho)}}$ may be considerable. Thus values close to the maximum figures quoted here may occur more frequently than in the case of $D_{d_{(\rho)}}$ and $D_{e_{(\rho)}}$.

Values of up to 50Ω were observed in brain and muscle preparations and up to 30Ω in skin preparations.

(iv) $C_{e_{(\rho)}}$ relates the common mode component of the voltages at the recording electrodes due to the escape field, to the value of the escape current. Since the escape current actually leaves the preparation through the earth electrode the major part of the common mode potential produced by it is composed of the voltage drop across the region of high potential gradient adjacent to the earth electrode surface i.e. the voltage drop produced by the escape current flowing

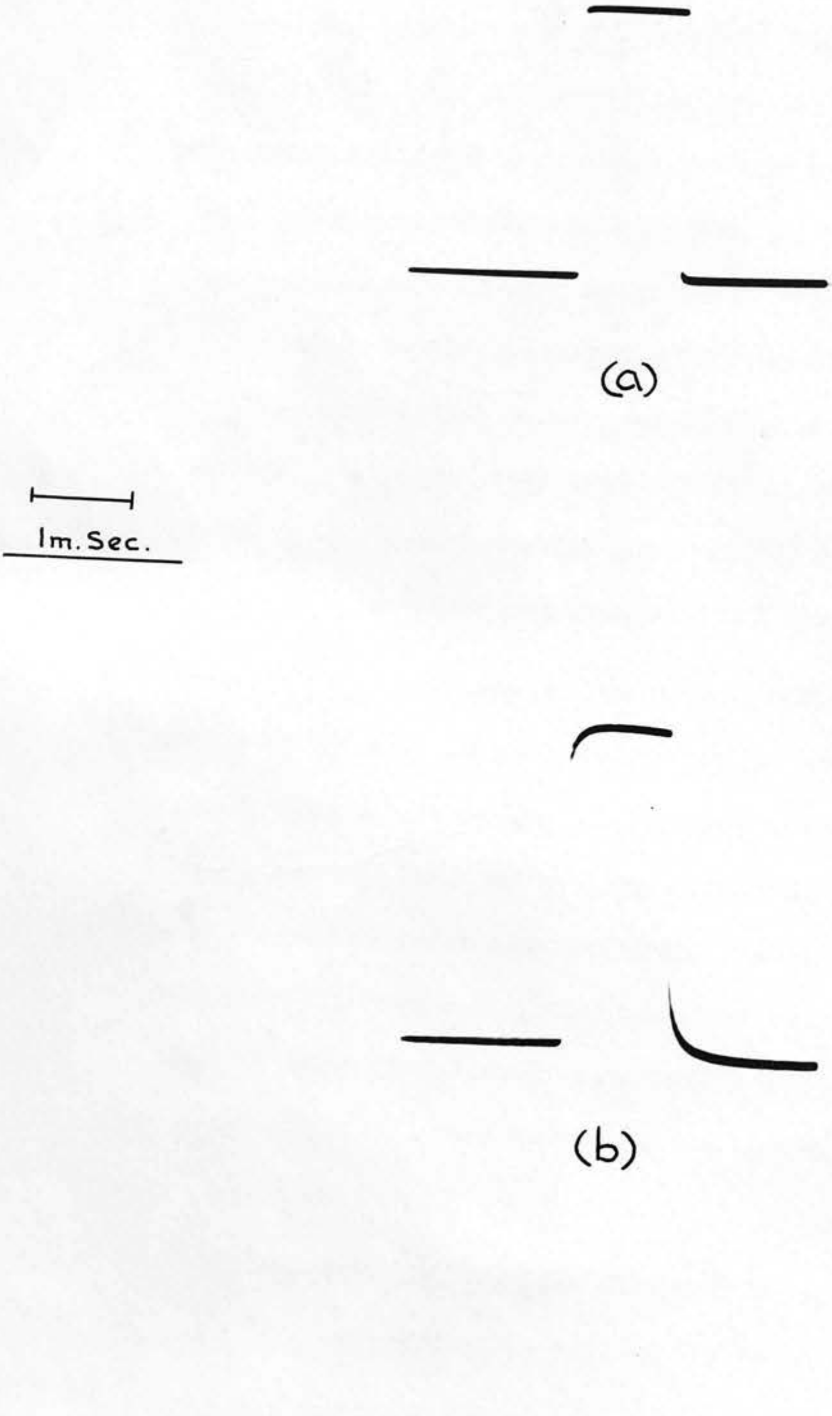

Fig. 4.3.8.

through the earth electrode impedance. Thus $C_{e(\rho)}$ depends almost entirely on the nature of the earth electrode and to only a very small extent on the relative positions of the electrodes on the tissue.

By comparing the voltage between the preparation and earth produced by the escape current during actual stimulation with the voltage drop across a known resistance in the earth lead, the nature of $C_{e(\rho)}$ for various earth electrodes was investigated. It was found that when an earth electrode consisting of a No. 16 gauge Hypodermic needle, previously treated with A.C., was inserted some 2 cm. into muscle the transfer impedance $C_{e(\rho)}$ was virtually resistive and of magnitude 100Ω to 200Ω. The corresponding $C_{e(\rho)}$ for the earth electrode used in surface recording from limbs (a metal plate 4 cm. x 6 cm. on skin prepared with electrode jelly) can be represented by a resistance of 1 $k\Omega$ in parallel with a capacitance of 0.3 μF.

Just as the transfer impedance $C_{e(\rho)}$ may not always be purely resistive, the three other transfer impedances $D_{d(\rho)}$, $D_{e(\rho)}$ and $C_{d(\rho)}$ may have 'reactive' components due to polarization effects in the tissues. Fig. 4.3.8. (a) shows the voltage recorded between a pair of recording electrodes in saline solution when a rectangular current pulse was passed through the solution by an adjacent pair or stimulating electrodes. The recorded waveform is also rectangular since the saline being a purely resistive medium leads to a transfer impedance which is also purely resistive. If the experiment is repeated using actual tissue instead of saline solution, the recorded waveform may be of the form shown in Fig. 4.3.8. (b) which is an oscillogram of the voltage recorded from the surface of the skin when a rectangular current pulse was injected into adjacent tissue. Here the recorded

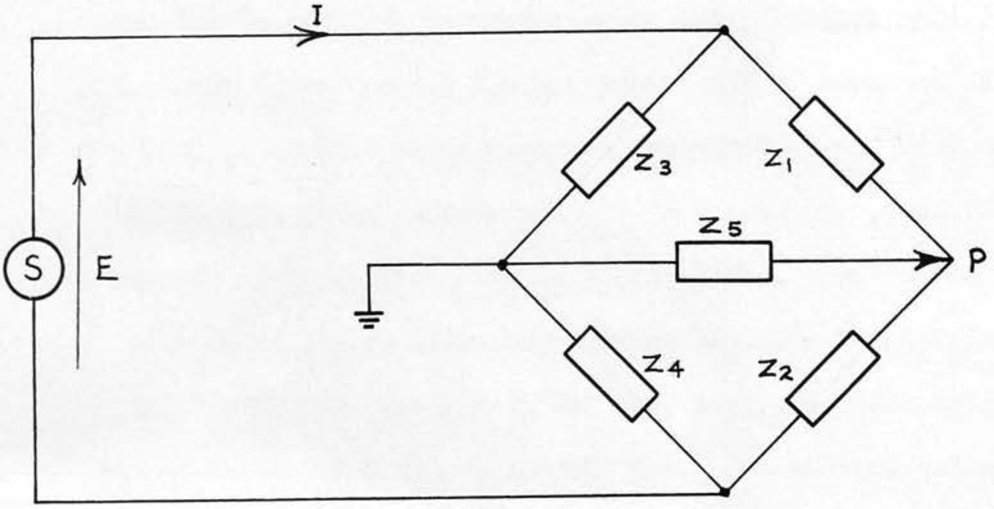

Fig 4.3.9.

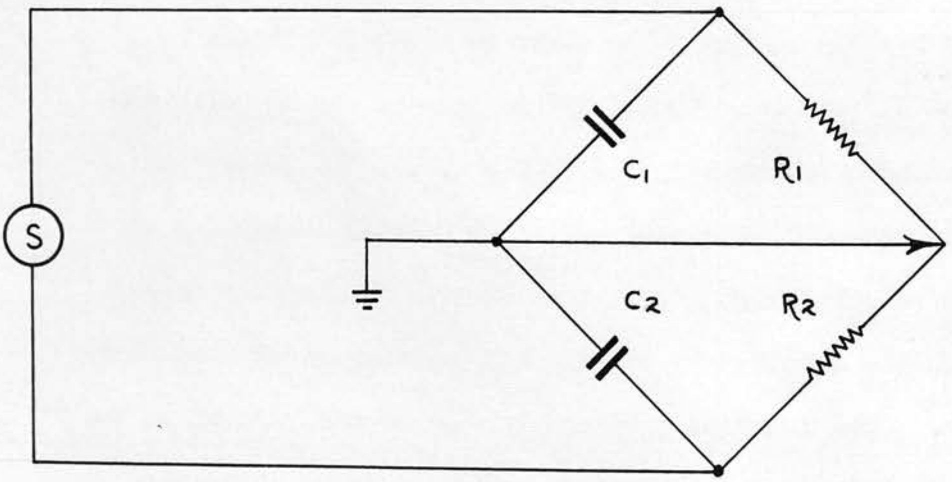

Fig 4.3.10.

waveform may be regarded as having a truly rectangular component as in Fig. 4.3.8. (a), but with a more slowly changing polarization component superimposed. The corresponding transfer impedance may then be thought of as a pure resistance in series with a polarization impedance as in the case of polarizable electrodes in saline.

The practical effect of this polarization component of the transfer impedances is slight in the cases of $D_{e(\rho)}$, $C_{d(\rho)}$ and $C_{e(\rho)}$ but the distortion of the waveform of the Differential Direct Component of the artefact in cases where $D_{d(\rho)}$ is not purely resistive can limit the effectiveness of techniques for the reduction of this component.

The Stimulus/Escape current transfer function $A_{(\rho)}$

In section 4.1 it was shown that the situation of the earth electrode in the stimulus field implies a potential difference between each stimulating electrode and earth resulting in a flow of escape currents through the stray impedances from the stimulus circuit to earth. Unless the earth electrode is in a region of high potential gradient adjacent to one of the stimulating electrodes, the potential differences between the stimulating electrodes and earth will be almost independent of the positions of the electrodes on the preparation and almost entirely determined by the nature of the stimulating electrodes. This being so it is convenient to make use of the concept of electrode impedance and to dispense with field considerations when evaluating the escape current. The situation may then be represented by a bridge circuit as shown in Fig. 4.3.9. S represents a stimulator connected to a preparation at P through stimulating electrodes having impedances Z_1 and Z_2. The preparation is connected to earth through an earth electrode of impedance Z_5

and the stray impedances from each side of the stimulator circuit to earth are shown as Z_3 and Z_4. In general the bridge will not be balanced so that an out of balance current I_e flows in the earth electrode impedance Z_5. The stray impedances from the stimulator to earth are most commonly the residual capacitances between a 'floating' stimulator circuit and nearby earthed objects so that, when the stimulating electrode impedances can be taken as being purely resistive and much greater than the earth electrode impedance, the bridge circuit simplifies to that shown in Fig. 4.3.10.

Appendix IV shows that when the stimulator output impedance is very low compared with the stimulating electrode impedances (constant voltage stimulator) $A_{(p)}$ is given by:-

$$A_{(p)} = \frac{(T_1 - T_2)}{T} \frac{p}{(p + \frac{1}{T})} \quad \ldots . \; 4.3.9.$$

where $T_1 = C_1 R_1$
$T_2 = C_2 R_2$
$T = (C_1 + C_2)(R_1 + R_2)$

When the stimulator has an output impedance very much greater than the stimulating electrode impedances (constant current stimulator) the transfer function is given by:-

$$A_{(p)} = \frac{p}{T_1 T_2}\left(\frac{T_1 - T_2}{T}\right)\left(\frac{T_1\left(p+\frac{1}{T_1}\right)^2 + \left(C_2R_1 + C_1R_2\right)\left(p+\frac{1}{T_1}\right)\left(p+\frac{1}{T_2}\right) + T_2\left(p+\frac{1}{T_2}\right)^2}{\left(p+\frac{1}{T_1}\right)^2\left(p+\frac{1}{T_2}\right)^2}\right) \cdots \; 4.3.10$$

These transfer functions may be used whatever the waveform of the stimulating current but it is seldom necessary to use the constant current transfer function in its full and rather unwieldy form since a further simplification can usually be made. This is possible because the rise time constant λ of the stimulating pulse is often long compared with the time constants T_1 and T_2. When this is so it is found that the escape current in both the constant voltage and constant current cases is in the form of a pair of exponentially decaying transients of the form

$$I_{e_{(t)}} = \pm I\left(\frac{T_1 - T_2}{\lambda}\right) e^{-t/\lambda} \quad \ldots\ldots \quad 4.3.11.$$

where I is the stimulating current

This result corresponds with a practical value of $A_{(p)}$ of:-

$$A_{(p)} = \flat(T_1 - T_2) \quad \ldots\ldots\ldots \quad 4.3.12.$$

The rather more complex expressions for $A_{(p)}$ applying where the stimulating electrodes must be represented by a parallel combination of resistance and capacitance as in the case of skin surface electrodes are also shown in Appendix IV together with examples of the corresponding escape current waveforms.

4.4. The form of the Resultant Artefact

The magnitude and waveform of the resultant artefact will depend on the relative preponderance of the four main artefact components and on their individual waveforms.

It is possible to envisage stimulating and recording systems in which each of the major artefact components would be dominant so that no generalisation can be made regarding the relative importance of the components and the form of the resultant artefact. Nevertheless, it is felt that consideration of the artefact components arising in a selected case may help to illustrate the use of the theory. The detailed algebra of the necessary calculations has been omitted since some are so long that their inclusion cannot be justified in support of such an illustration.

Fig. 4.4.1.

Fig. 442

The description is simplified if it is assumed that the stimulating pulse lasts long enough for the transient effects to decay virtually to zero by the end of the pulse. Equations for the waveforms at the leading edge of the pulse only need be used since the waveform at the end of the stimulus pulse will then be a mirror image of that at the start.

Let it be assumed that a constant current stimulator is used giving a current pulse rising according to

$$I_{s(t)} = I(1 - e^{-t/\lambda}) \quad \ldots\ldots 4.4.1.$$

$$\therefore \quad I_{s(p)} = \frac{I}{\lambda} \frac{1}{p(p + 1/\lambda)} \quad \ldots\ldots 4.4.2.$$

If λ is around 1 μ Sec. as is commonly the case and the time constants T_1 and T_2 of the stimulating electrode resistances with the stimulator capacitances to earth are less than 100 mμ Sec. (50pF x 2 KΩ) we may apply Eqn. 4.3.13. to obtain $A_{(p)}$ and hence $I_{e(p)}$ thus

$$\begin{aligned} I_{e(p)} &= A_{(p)} \, I_{s(p)} \\ &= \frac{I(T_1 - T_2)}{\lambda} \frac{1}{(p + 1/\lambda)} \end{aligned}$$

$$\therefore \quad I_{e(t)} = I\left(\frac{T_1 - T_2}{\lambda}\right) e^{-t/\lambda} \quad \ldots\ldots\ldots 4.4.3.$$

The escape current then takes the form of a pair of exponentially decaying 'spikes' of time constant λ at the rising and falling edges of the stimulus pulse. The waveforms of the stimulus and escape currents are sketched in Figs. 4.4.1. (a) and (b) alongside actual oscillograms, Figs. 4.4.2. (a) and (b), of the currents obtained in an experiment using a saline bath 'preparation' with resistive electrodes. The stimulus pulse in this experiment was

500 μ Sec. long and had a rise and fall time constants of 1 μ Sec. The escape current transients having a time constant also of 1 μ Sec. present a 'spikey' appearance in comparison with the relatively long stimulus pulse. Had the stimulus been applied through electrodes on the surface of the skin the escape current transients would have had a much longer time constant, of the order of a millisecond (Appendix IV).

Assuming a resistive medium, the waveforms of the potentials at the recording electrodes will be the same as those of the stimulating and escape currents. The four artefact components resulting from these potentials depend on the overall transfer functions of the recording system. The overall transfer functions of a typical system consisting of an amplifier of four cascaded L.T.P. stages preceeded by a network representing the recording electrode impedances and amplifier input impedances are shown in Appendix V. The same appendix gives the response of the system to differential and common mode inputs of the form $V(1 - e^{-t/\lambda})$ and $Ve^{-t/\lambda}$, i.e. the waveforms of the recording electrode potentials in the stimulus and escape fields in the present case. These four responses give the waveforms of the four artefact components leaving only the relative magnitudes of the components to be determined. The magnitudes depend on the values of the transfer impedances corresponding to the electrode arrangements employed.

Using the stimulator and recording apparatus developed in the course of this study it was possible to set up stimulating and recording systems having the special properties needed to illustrate the various artefact components separately. The recording apparatus could be made to

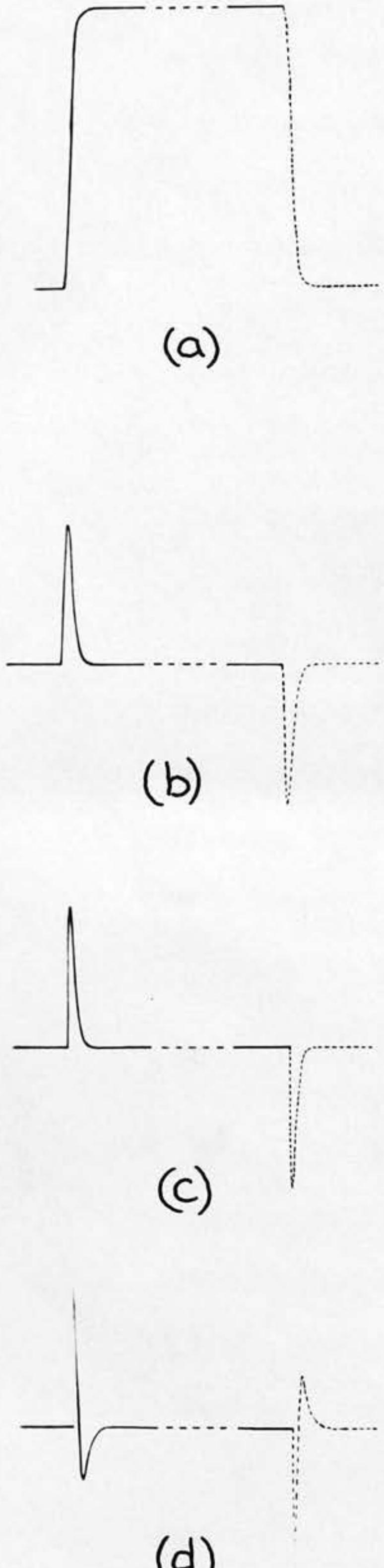

Fig. 4.43.

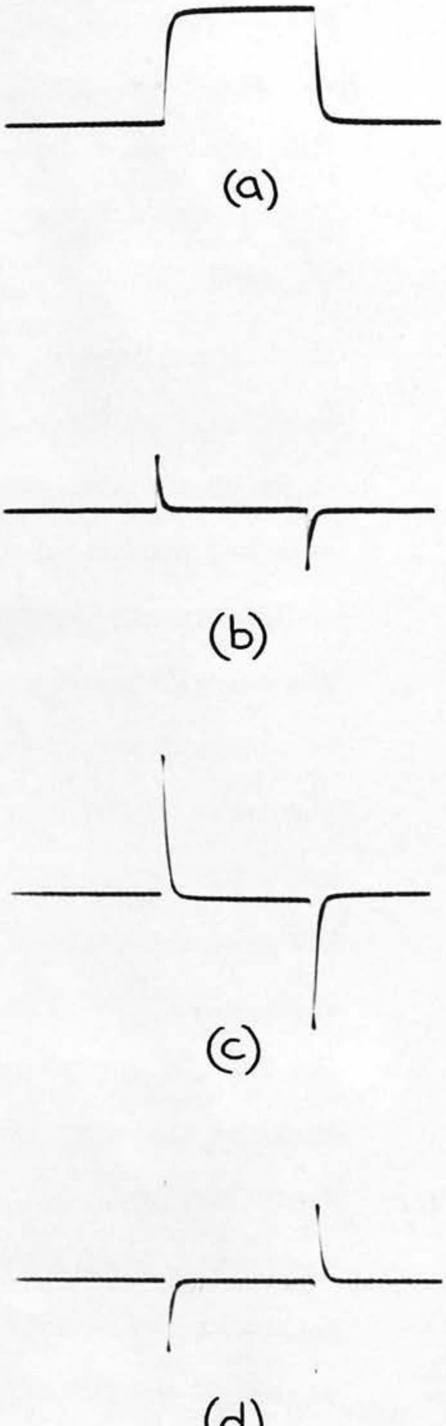

Fig 4.4.4.

behave as a conventional recording system, or to have such a small common mode response that artefacts could be recorded virtually free from the Common Direct and Common Escape Components. Similarly, the stimulator could be arranged to give such a small escape current in comparison with the stimulus current that the escape components of the artefact were negligible. These facilities were used with suitable electrode arrangements to obtain the oscillograms of Fig. 4.4.4. showing the four components of the artefact which would be obtained with the system assumed in this illustration.

The Differential Direct component is the response of the recording system to a differential input of the form $V(1 - e^{-t/\lambda})$ i.e. an output of the form $E(1 - e^{-t/T} - \frac{t}{T} e^{-\frac{t}{T}} - (\frac{t}{T})^2 \frac{e^{-t/T}}{2})$, the waveform sketched in Fig. 4.4.3. (a). For this system the principal recording system time constant, T, is assumed to be of the order of 10 μ Sec. so that the output is a pulse rising to its full value in some tens of microseconds. This component is thus a recognisable reproduction of the stimulus pulse, when the stimulus pulse length is of the order of a millisecond, as can be seen from the oscillogram of the Differential Direct artefact component Fig. 4.4.4. (a).

The Common Direct component is the response of the system to a common mode input of the form $V(1 - e^{-t/\lambda})$ and in this system takes the shape of a pair of 'spikes' of the form $V\left(\frac{t}{T}\right)^2 \frac{e^{-t/T}}{2}$ shown in Fig. 4.4.3. (b) and in the oscillogram of the Common Direct Component Fig. 4.4.4. (b).

The Differential Escape Component and the Common Escape Component are the responses of the recording system to

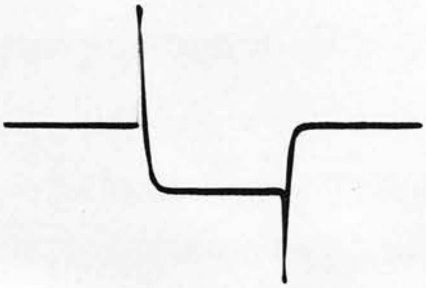

Fig. 4.4.5.

differential and common mode inputs of the form $Ve^{-t/\lambda}$ and are of the form $E\left(\frac{t}{T}\right)^2\frac{e^{-t/T}}{2}$ and $E\left(\frac{t}{T}e^{-t/T}-\left(\frac{t}{T}\right)^2\frac{e^{-t/T}}{2}\right)$ respectively sketched in Figs. 4.4.3. (c) and (d) and photographed in Figs. 4.4.4. (c) and (d).

The resultant artefact obtained with this system being the algebraic sum of the four main components may assume an unlimited variety of shapes depending on the magnitudes and signs of the four components. An example of a possible combination is shown in the oscillogram of Fig. 4.4.5.

It should be emphasised that the system just considered constitutes a relatively simple case which has been specially chosen to facilitate the illustration. Thus it will be observed that only one (T) of the many time constants in the system appears in the expressions for the artefact component waveforms. This is because the example was chosen so that T was so much greater than the other system time constants that the other exponential components of the artefact waveforms are negligible. In practice little change is observed in the artefact waveform with increase in the smaller time constants until they become larger than T. When skin surface electrodes are used time constants of the order of a millisecond enter into the system and, since these are much greater than the assumed value of 10 μ Sec. for T, a much wider variety of artefact waveforms becomes possible.

It has been shown that the form of the stimulus artefact is determined by many factors involving every part of the stimulating and recording system. The close interrelationship of these factors makes it necessary to consider the system as a whole so that actual calculation of the artefact produced in given circumstances is inevitably a tedious process. Nevertheless it is felt that the description outlined in this chapter enables the subject to be studied systematically in the search for modifications aimed at reducing the artefacts obtained with practical systems.

CHAPTER FIVE

Consideration of Possible Solutions to the Stimulus Artefact Problem

5.1 General Remarks

Consideration of the relative merits of proposed solutions to the artefact problem presupposes some concept of the desired result. The usefulness of the artefact as an event marker has already been noted, as have some of its disadvantages. It is perhaps fair to assume that the ideal solution would remove all of the undesirable effects of the artefact without necessarily eliminating all traces of the artefact itself.

What are the undesirable effects of the artefact? Clearly 'blocking' of the amplifier, or even oscillations of the record base line after the stimulus pulse, should be eliminated if at all possible, but must the artefact also be controlled in the duration of the stimulus pulse itself? If not, the use of non-overloading amplifiers may offer a satisfactory solution. The desirability of recording wave responses in the central nervous system during trains of stimulus pulses, or the use of pulses of several milliseconds duration in situations where responses of short latency may be expected, rules out 'solutions' based on this approach so that, ideally, the system should give control of the artefact both during and after the stimulus pulse.

'Control' of the artefact need not necessarily imply reduction of its amplitude, indeed it is conceivable that an increase in amplitude of the artefact might be acceptable provided that it was accompanied by a sufficient reduction in the duration of the artefact. Thus a modification which offered a reduction in the amplitude of the Differential Direct component at the expense of an increase in a much 'thinner', and therefore less objectionable, escape component, might be regarded as an overall improvement.

Considerations of this sort are inevitable when the records produced by the system are subjectively 'filtered' by the operator of the equipment who may be prepared to accept very large deflections due to the stimulus artefact provided they are readily distinguishable from biological responses.

It is unfortunate that a satisfactory design philosophy cannot be based on this circumstance, firstly since the tolerance of investigators to artefacts in their records is variable, secondly since such a technique would be ill-adapted to possible automatic systems, but mainly because an uncontrolled artefact component even of short duration, if allowed to overload the recording amplifier, could result in an amplifier recovery transient of much longer duration so that the system would fail. The assumption will therefore be made that reduction of the amplitude of all artefact components is desirable.

The maximum acceptable amplitude for the artefact is hard to establish, depending as it does on the relative importance of the four artefact components and on the type of recording considered. On the other hand, the minimum level below which the artefact need not be reduced is set by the noise level of the recording system used.

It is thus considered that an ideal stimulating and recording system should give control of the resultant artefact under all conditions likely to be met in practice and that, although sufficient artefact may be retained for marking purposes if required, reduction to the system noise level may be achieved.

5.2. Effect of the System Time Constants

The appearance of the time constants λ and T in the amplitudes of the expressions for the escape current and artefact components in Chapter Four suggests that some advantage may be gained by manipulating these factors. Thus, for example, it would appear that increasing the stimulus pulse rise time constant λ would decrease the amplitude of the escape current transients given by Eqn. 4.4.3.

Although just such a decrease is observed in practice the effect is less useful than might at first appear. In the first place the reduction in amplitude of the escape current transients is accompanied by a corresponding increase in their duration so that the total charge flowing round the escape circuit in each transient remains unaltered. This can be predicted by integrating either of the escape current expressions in Appendix IV from t = o to t = ∞ when it is seen that the total charge in each transient is always $I(T_1 - T_2)$ and independent of λ, a result which may be of some significance when considering the spurious stimulation which might be produced by the escape current transients.

In the second place, it has been seen that the amplitudes of the escape components of the artefact depend not only on λ but also on the rise time constant of the amplifier stages, T. Indeed when λ is much less than T the amplitudes of the escape components are independent of λ. This reflects the fact that under these conditions, although the escape field, and hence the voltage at the recording electrodes, increases in direct proportion to any decrease in λ, the attenuation of the escape components in the later stages of the amplifier also increases in direct proportion to the decrease in λ, so that the escape artefact components remain constant. In practice a worthwhile reduction in the escape components of the artefact is only obtained when λ is considerably greater than T. Since T is typically some 10 μ Sec. this implies that to obtain a useful reduction in escape artefact the stimulus pulse rise time constant would have to be increased to some tens or even hundreds of microseconds. While such slowly rising pulses might be usefully employed where pulse durations of the order of milliseconds are permissable, the effect of such variations in pulse rise time as can be contemplated using a stimulus of a total duration of some tens of microseconds can be regarded as negligible.

The reduction of three of the artefact components obtainable by increasing the amplifier time constant T can often be more readily utilised. The expression in Appendix V for the Differential Escape, and Common, Direct and Escape Components show that these components are inversely proportional to T where this time constant is much larger than any of the other system time constants. This assumption will be valid in most practical systems except when longer time constants are introduced into the system by the use of polarizable, or skin surface electrodes. In all other cases it would seem to be worthwhile to use an amplifier having the minimum bandwidth (largest T) necessary to record the response satisfactorily, since this will minimise the amplitudes of three of the artefact components.

5.3. Choice of Electrode Position

Substantial reductions of three of the artefact components may be achieved by choosing electrode positions to minimise the transfer impedances $D_{d_{(\rho)}}$, $D_{e_{(\rho)}}$, and $C_{d_{(\rho)}}$. The effect of such manipulation will be determined by the actual field configuration in the preparation in each case but a few general rules may be formulated.

The Differential Direct and Differential Escape components of the artefact will be much reduced by choosing a very small separation between the two recording electrodes. Similarly, both the Common and Differential Direct components will be reduced by decreasing the spacing between the stimulating electrodes to the minimum which will give satisfactory stimulation. The Differential Escape Component will be decreased when the earth electrode is placed near to the stimulus site although this will generally result in an increase in the Common Direct Component.

Additional control of these artefact components may be obtained by suitable orientation of the electrode pairs since, for example, rotation of the stimulating electrode pair will alter the stimulus field distribution in the preparation, the axis of the stimulating 'dipole' may be aligned to position the field so that the recording electrodes lie on the same equipotential surface. The same effect might be achieved by rotation of the recording electrode pair in a fixed stimulus field. Thus appropriate orientation of the stimulating and recording electrode pairs may be used to control the Differential Direct component.

In the same way the stimulating electrodes may be orientated to position the stimulus field so that the recording electrodes have potentials equally above and below that of the earth electrode, or the position of the earth electrode with respect to the recording electrodes chosen to bring about the same result in a given stimulus field. Either manoeuvre would eliminate the Common Direct component of the artefact . Similarly, orientation of the stimulating electrode/earth electrode axis to position the escape field, or of the recording electrodes in this field, could be used to reduce the Differential Escape component.

In principle, one, two, or even three artefact components might be reduced to acceptable limits by careful positioning and orientation of the electrodes, but for two reasons this technique cannot be relied on as the sole means of artefact control. In the first place it has to be borne in mind that the intention is usually to record the activity of the nervous system and not merely to eliminate the stimulus artefact, a consideration which somewhat restricts the possible positions and orientation of the electrodes. Secondly, movement of the electrodes in an attempt to reduce the artefact may be very undesirable in view of the risk of damage to the tissues.

Within these limitations, careful consideration of the electrode position can do much to ease the problem and in some cases the electrode arrangement most suitable from a physiological standpoint is also very effective in limiting the artefact.

5.4. A Special Solution

The anti-artefact technique developed at the Institute of Neurophysiology of the University of Copenhagen and described by Buchthal, Guld, and Rosenfalck (1955) and by Guld (1959, 1960), forms a good example of a system which makes use of a special electrode arrangement to dispose of some of the artefact components.

The method appears to have been developed in connection with work on the velocity of propagation of the action potential in muscle fibres using concentric or bipolar needles for both stimulation and recording. The use of such electrodes ensures that the spacing between the stimulating electrodes, and between the recording electrodes, are very small compared with the distance from the stimulating to the recording site. This results in a negligibly small Differential Direct component of the artefact. Because of the small recording electrode spacing the Differential Escape component will also be very small especially if the earth electrode is situated near the stimulating electrodes. This last condition would certainly be fulfilled by using the shaft of a bipolar stimulating needle as the earth electrode, but since this would place the earth in a relatively intense part of the stimulus field the Common Direct component would be excessive. The Common Escape component might also be expected to be an important feature of the artefact in this type of recording using small, high impedance stimulating and recording electrodes.

The elegant solution adopted by the Danish workers was to position the earth at a point remote from the stimulus site so that the Common Direct component was small and to rely on a special screening arrangement to control the Escape Components of the artefact. The complete stimulating circuit was entirely surrounded by a metal screen which was connected to the preparation by a low impedance electrode at a point near to the stimulus site.

Since the stimulator capacitance to earth is then replaced by the capacitance to this screen, the escape current tends to flow from the stimulus site to this extra electrode instead of through the earth electrode as shown in Fig. 5.4.1. (a). In so far as the extra electrode is placed close to the stimulating electrodes, the escape field in the preparation is reduced, and this combines with the small recording electrode separation to produce a very small Differential Escape artefact. Since the escape current flowing in the earth electrode impedance is much reduced the Common Escape component is also decreased.

The effectiveness of the system is limited by the finite impedance of the extra electrode, which can hardly be much larger, and so of lower impedance, than a conventional earth electrode, and the inevitable capacitance to earth, typically some hundreds of pF, of the stimulator screen. The extra electrode impedance Z_s and the screen/earth capacitance C_s are shown on the equivalent circuit of the system in Fig. 5.4.1. (b) from which it can be seen that a fraction (I_2) of the escape current must still flow in the earth electrode impedance Z_e producing a volts drop V_{ce} across it.

When this system was tried in this laboratory it was found that a reduction in the artefact by a factor of ten could be obtained when the screen surrounding the stimulator was connected to the extra electrode instead of to earth. The overall effect so far as the escape artefact was concerned was equivalent to that which would be obtained with a stimulator having a capacitance to earth of about 10 pF, i.e. similar to that of an R.F. unit, but with all the advantages of power output and convenience of a conventional stimulator. Encouraging though this result might be, it was felt that the system had certain disadvantages which limited its

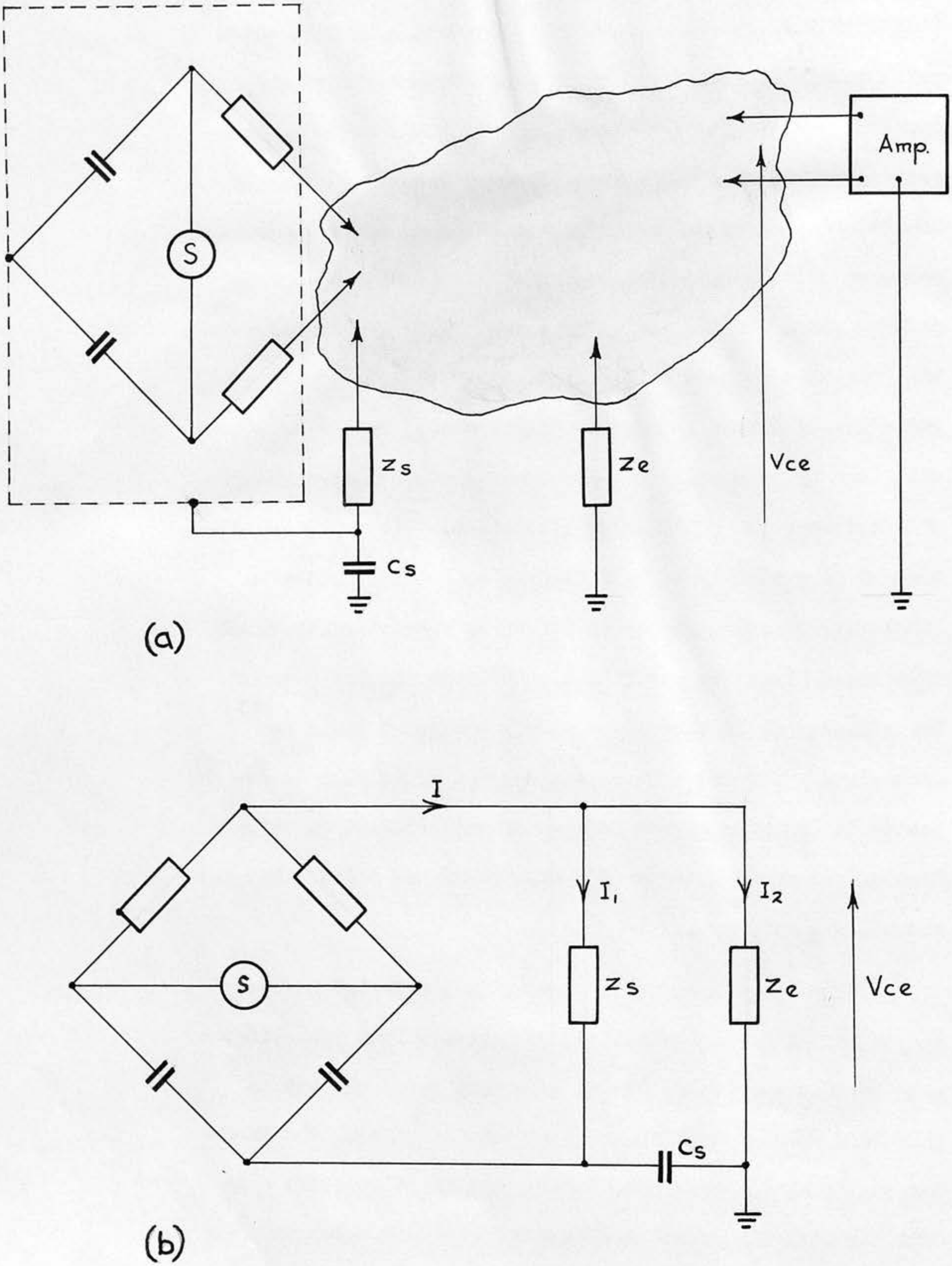

Fig 5.4.1.

usefulness as a basis for a truly general solution to the artefact problem.

Firstly, the reduction of the Common Escape artefact is restricted by the difficulty of obtaining an electrode of much lower impedance for connecting the screen to the preparation, and of reducing the capacitance from the screen to earth. It is difficult to imagine this capacitance being reduced to much less than 100 pF with a mains operated stimulator, while the extra electrode cannot be increased in size indefinately and still be kept 'near' to the stimulating electrodes. Secondly, the small Differential Escape component achieved with this system is due partly to the small recording electrode spacing so that, were this spacing increased, the maintenance of a small distance between the screen electrode and the stimulating electrodes would become even more critical, conflicting with the requirement for a large, low impedance extra electrode. Thirdly, the actual escape current flowing in the system is diverted to the extra electrode rather than diminished so that the danger of spurious stimulation is not entirely eliminated.

5.5. The General Case

A general solution to the artefact problem requires that all four of the artefact components be reduced to within acceptable limits.

Consideration of the four components reveals that two of them (the Differential and Common Escape components) would be eliminated if the stimulating part of the system were modified to give zero escape current (zero $A_{(e)}$). Another pair of components (the Common Direct and Common Escape components) would vanish if the recording apparatus could be made to have zero sensitivity to common mode signals (zero overall $M_{V(\rho)}$). With these shortcomings of the apparatus removed the stimulus artefact would be reduced to a single component, the Differential Direct component.

Since the stimulating current must necessarily be accompanied by a field in the preparation, and since the recording apparatus must be sensitive to the differential mode voltage at the recording electrodes if it is to record the signal, the Differential Direct component of the artefact would appear to be inevitable except in the special case when the recording electrodes are equipotential in the stimulus field. Thus it would seem that unless it is permissable to position the stimulating and recording electrodes on the preparation so as to control the Differential Direct component, no general solution can be found. While this is probably true in regard to the basic stimulating and recording system so far considered, the very inevitability of the Differential Direct component in such a system suggests a way out of the difficulty.

If, in effect, a double stimulating and recording system were used, two sets of artefact components, i.e. eight components in all, would be obtained. Since, in general, neither Differential Direct component would be zero there would exist a possibility of combining the outputs of the two systems in such a way that the Differential Direct components cancelled. If this could be done so that the wanted signal was preserved, and if the other six artefact components of the double system could be controlled by independent means, a general solution to the problem would result.

Considerations like these made it plain that the problem of finding the optimum anti-artefact system would have to be attacked on three fronts.

(1) To reduce the Differential and Common Escape components of the artefact the best method for reducing the escape current with a given stimulating current (reducing $A_{(p)}$) must be found.

(2) To reduce the Common Escape and Common Direct components a way must be found to minimise the overall common mode sensitivity of the recording system.

(3) Consideration must be given to the best way of splitting a system incorporating these refinements into two branches so that the residual Differential Direct components can be reduced by balancing the part arising in one branch of the combined system against that from the other.

The ways in which these three requirements might be met are discussed in the remaining sections of this chapter.

5.6. Escape Current Reduction

In the simplest case when the stimulating electrode impedances can be represented by resistances R_1 and R_2, and the capacitances to earth from each side of the stimulator circuit are C_1 and C_2, it has been shown that the escape current transfer function $A_{(p)}$ is given by:-

$$A_{(p)} = p(C_1R_1 - C_2R_2)$$

There are thus three possible ways of reducing the magnitude of $A_{(p)}$

(1) By adjusting the values of C_1, C_2, R_1 and R_2 in an attempt to equalise C_1R_1 and C_2R_2 and so balance the escape current bridge circuit.

(2) By reducing R_1 and R_2 by some factor k, say, which would have the effect of reducing $A_{(p)}$ by the same factor.

(3) By reducing C_1 and C_2.

(1) The idea of 'balancing the bridge' by artificially increasing one of the capacitances or resistances is attractive since it offers the possibility of reducing the escape current indefinitely by sufficiently accurate adjustment of the variable component. The scheme has the additional advantages of extreme simplicity and economy. It was therefore disappointing that when the system was tried in the laboratory, although a reduction of the order of a hundred times in the escape artefacts could be demonstrated using pure resistances to represent the electrodes and adding capacitance to one side of the stimulator circuit, a decrease of around ten times was all that could be achieved using actual electrodes. This result would seem to be adequately explained by the invalidity of the assumption of resistive electrodes when very accurate balancing is contemplated so that prospects for development of an ideal system based on a balancing technique of this kind seem unpromising.

(2) Evidently if both R_1 and R_2 were to be reduced by some factor the escape current would be reduced by the same factor, and indeed this result is not dependent on resistive electrodes since for a given stimulus current the voltage across the 'escape current bridge' will be almost exactly proportional to the impedance of the two stimulating electrodes in series. For this reason the use of stimulating electrodes of the lowest practicable impedance will help to minimise the escape current. However, since other factors govern the size and impedance of the stimulating electrodes, reduction

of the escape current by this means alone has its limitations.

(3) No such restriction applies to the reduction of the capacitances C_1 and C_2. The expressions given in Appendix IV for $A_{(\rho)}$ and the escape current show that, in every case, a proportionate reduction in the capacitances to earth from each side of the stimulator will decrease the escape current regardless of the nature of the electrode impedances. Since these capacitors serve no useful function their reduction would seem to offer the most promising line of development in escape current control.

In estimating the order of reduction in capacitance which would be required to give satisfactory control of the escape artefacts, account was taken of the fact that the Common Escape component would be doubly controlled, first by reduction of the escape current, and secondly by the measures adopted to reduce the common mode response of the recording system. On the other hand, reduction of the Differential Escape component to a satisfactory level depends almost entirely on decreasing the capacitance to earth of the stimulator. Estimations of the amplitude of the Differential Escape component in typical systems indicate that to reduce this component to below the noise level of the recording amplifier under most conditions would require the total capacitance to earth of the stimulator circuit to be reduced to around 1 pF or less.

Where no special precautions are taken to ensure low capacitance to earth, a value of several hundred pF is perhaps typical of most general purpose laboratory stimulators. Attempts to reduce this capacitance in the past have relied on reducing the physical size of the stimulating circuit either directly by miniaturising the complete stimulator as in the transistorised stimulators of George (1959) and Greer (1960), or indirectly by the use of the R.F. isolating unit with its small secondary circuit. Capacitances to earth of 50 pF. and 5 pF. respectively are reported to have been attained by these methods at some sacrifice in the performance of the stimulators, notably in respect of available output. It is interesting therefore to speculate on the ultimate possibilities of this line of attack.

The minimum capacitance of any conducting body when it is remote from other objects can be calculated from its dimensions. Thus a conducting sphere of radius one centimetre has a minimum capacitance to earth of 1.1 pF., so that a stimulator to achieve a total capacitance to earth of less than 1 pF. would have to have a diameter about that of a sixpence.

It seems unlikely that any complete stimulator of such dimensions could be of much use as a serious research tool, while if the R.F. technique were used the interwinding capacitance of the R.F. transformer would have to be so low that it is difficult to imagine such a device being able to transfer to the stimulating circuit more than a small fraction of the energy which might be radiated to nearby apparatus.

These considerations led to the conclusion that existing lines of development of low capacitance stimulators offered very little prospect of further exploitation and that a radically different approach was needed.

Just such an approach suggested itself when it was observed that existing schemes for the reduction of the escape current could all be interpreted in terms of passive modifications to the bridge equivalent circuit in which the escape current flows. Since none of these appeared to offer

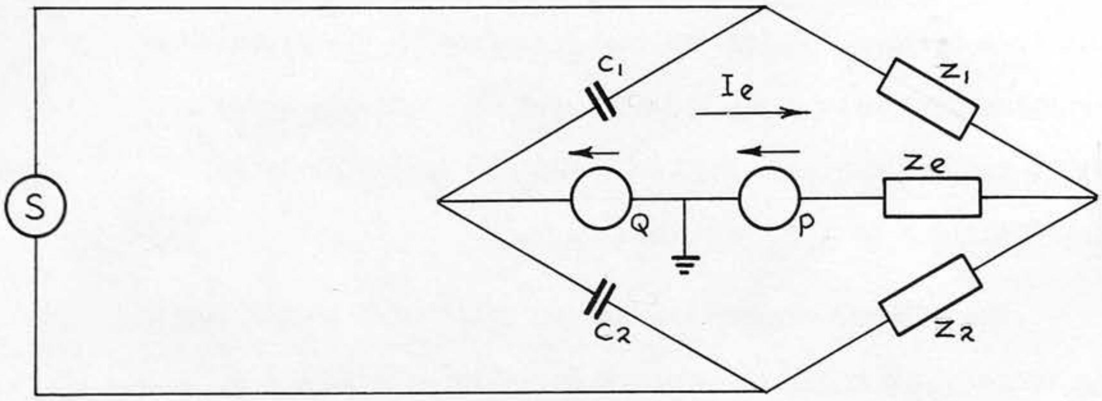

Fig 5.6.1.

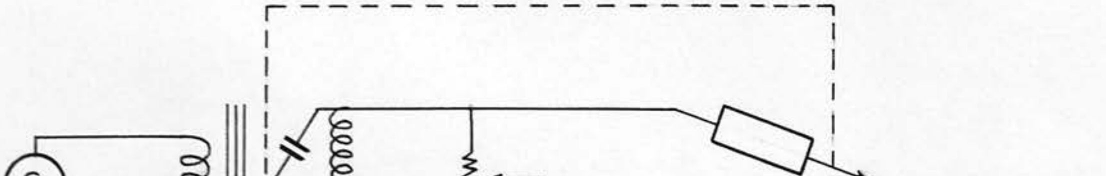

Fig 5.6.2.

an adequate solution it was felt that perhaps the introduction of active elements into the equivalent circuit would succeed.

Fig. 5.6.1. shows the bridge equivalent circuit slightly modified to include an extra generator inserted in the earth lead diagonal at either of two alternative positions, P and Q, at opposite sides of earth. Assuming that this extra generator is inactive, an escape current I_e will flow in the earth diagonal through the earth electrode impedance Z_e. If the generator in either position is now energised it may be arranged so that its voltage tends to oppose the flow of the escape current, and, if correctly adjusted, to reduce the escape current to zero. Evidently, if the generator could be arranged to provide just the right voltage automatically, a new way of reducing the escape current would result.

Further consideration showed that position P was unsuitable for the extra generator since, although it would undoubtedly operate to reduce the flow of escape current in the earth lead, the voltage of a generator in this position would appear as a common mode input to the recording system. Since no such objection applied to the generator position at Q an experiment was arranged to check the operation of the scheme in practice.

Fig. 5.6.2. shows the set up for this pilot experiment. The secondary circuit of a stimulus isolating transformer was entirely surrounded by a screen so that the capacitances to earth of the stimulus circuit were effectively replaced by the capacitances to the screen. The screen was driven by the output of a cathode follower which was in turn fed from a potentiometer across the stimulating electrodes. The current

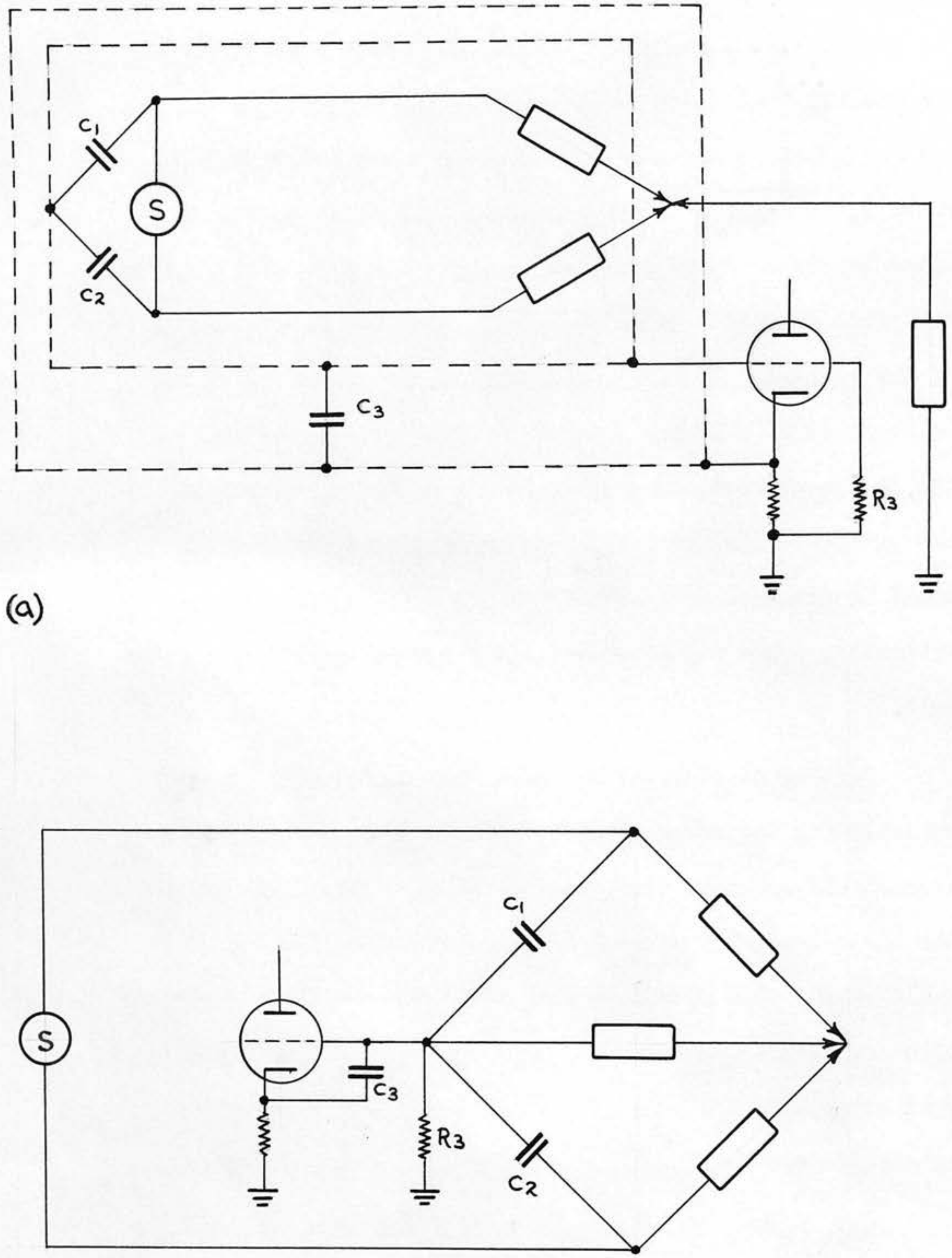

Fig 5.6.3.

in the earth lead was monitored by observing the voltage dropped across a small resistance inserted in the lead. This arrangement is equivalent to that of Fig. 5.6.1. with the extra generator placed at Q.

It was found that the slider of the potentiometer could be adjusted to a position at which the current in the earth lead was greatly diminished. This condition occurs when the potential at the screen is made equal to that which the screen would have acquired by virtue of its coupling to the stimulator circuit via the stimulator/screen capacitances, had the screen been left 'floating'.

While the result of this experiment encouraged further development of the principle involved, the circuit of Fig. 5.6.2. had little promise as a practical anti-artefact device. In the first place the presence of a low resistance potentiometer across the stimulator output restricts the system to use with constant voltage stimulators. Secondly, the use of non-resistive stimulating electrodes would introduce difficulties, and thirdly the system is of the 'open loop' type and requires manual adjustment of the potentiometer.

A closed loop variation of the same principle based on the circuit of Figs. 5.6.3 (a) and (b) was next considered. In this system the stimulator circuit would be surrounded by a double screen and a cathode follower used to drive the outer screen so that its voltage was always very nearly equal to that of the inner screen. Since the voltage across the interscreen capacitance C_3 would then be very much less than that which would obtain when the outer screen was earthed, the current flowing through C_3, i.e. the escape current, would be correspondingly reduced.

This version has the advantage of being fully automatic

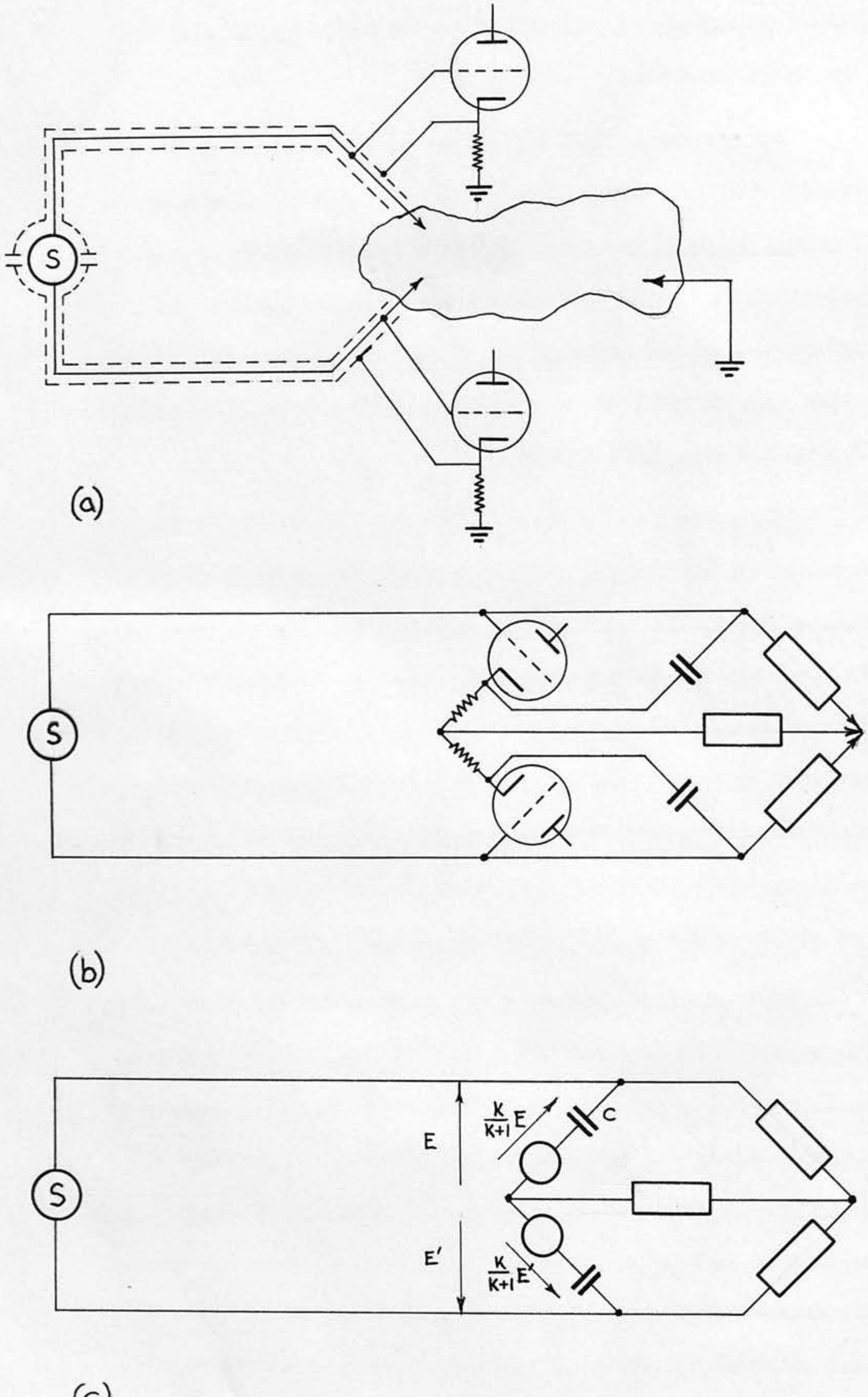

Fig 5.6.4.

and independent of the type of stimulator and stimulating electrodes, but might be limited in its effectiveness by the necessity of having a grid leak resistance R_3 in parallel with C_3 to provide a D.C. return to earth for the cathode follower grid. This resistance would have to be limited in value to safeguard the valve used in the cathode follower circuit from destructive grid current effects. The requirement for a double screen surrounding the entire stimulating circuit, preferably using a large interscreen separation to minimise C_3, would also raise practical difficulties.

For these reasons this system was not proceeded with but modified to make use of two extra generators instead of one.

A stimulator circuit can always be arranged so that all exposed parts are connected to either one or other of the output terminals. Two separate screens can then be used to surround these separate parts of the circuit. Two cathode followers fed from the two stimulator output terminals can then be used to drive the corresponding screens as shown in Fig. 5.6.4. (a).

Since the capacitances to earth of the stimulator circuit are replaced by the capacitances to these screens the equivalent circuit of the arrangement is as shown in Fig. 5.6.4. (b). Each cathode follower circuit can be made to have a 'gain' only slightly less than unity, say $\frac{K}{K+1}$ where K is much larger than unity, so that the situation reduces to that illustrated in Fig. 5.6.4. (c) where each cathode follower is represented by a separate generator of voltages $V = \frac{KE}{K+1}$, and $V' = \frac{KE'}{K+1}$, in series with the capacitances from the stimulator leads to earth.

The voltage between one side of the stimulator circuit and earth, attempts to produce a current through C contributing to the escape current. Due to the cathode follower action, the voltage $V = \frac{KE}{K + 1}$ acts in opposition to this current flow. The net voltage across C is thus $E - \frac{KE}{K + 1} = \frac{E}{K + 1}$ so that the current actually escaping to earth through this capacitance is given by:-

$$I_{(p)} = \frac{E_{(p)}}{K + 1} pC = E_{(p)} p\left(\frac{C}{K + 1}\right)$$

If the cathode followers were not energised, so that the screen round this part of the circuit was effectively earthed, the current would have been E pC, so that the action of the cathode follower is to reduce the apparent capacitance to earth of this side of the stimulator circuit by a factor of (K + 1). Assuming similar cathode followers, a proportionate reduction takes place in the capacitance to earth of the other side of the stimulator circuit so that the total capacitance to earth of the stimulator is reduced by a factor of (K + 1). Since, in principle, K can be made as large as we please, an unlimited reduction in stimulator capacitance to earth, and so in the escape current is apparently possible.

In practice the efficacy of the system is determined by the performance of the cathode followers. The transfer function of practical cathode followers can never be simply $\frac{K}{K + 1}$. Assuming only one dominant pole in the open loop transfer function of the cathode follower requires that in the closed loop transfer function $\frac{K}{K + 1}$, K be replaced by $\frac{K}{T_K(p + \frac{1}{T_K})}$ where T_K is the time constant of the dominant pole. This has the effect of introducing a damped sinusoidal term into the resulting expression for the escape current obtained with the system. However, a detailed study shows that if T_K is much less that T, the time constant of the recording amplifier stages, the actual escape artefact obtained will differ negligibly from that which would have been found if K had been a pure number.

This system requires but a single screen round each side of the stimulating circuit, thus simplifying construction, and has no grid leaks across the capacitances being reduced since a D.C. return to earth for the cathode follower grids is provided through the preparation. Its operation is not dependent on the stimulating electrodes being resistive nor on the use of special electrode arrangements as in the system discussed in Section 5.4. Best of all, the scheme appears to offer the possibility of constructing a stimulator of quite unrestricted characteristics as regards available output, output impedance etc., yet giving escape currents lower than would be conceivable with a purely passive technique for reducing stimulator capacitance.

This scheme was therefore adopted as part of the general anti-artefact system.

5.7. Reduction of the Common Mode Sensitivity of the Recording System.

It is implied by Eqns. 4.3.1. to 4.3.5. that the overall $M_{V_{(F)}}$, and thus the common mode response of a recording system, is proportional to the overall gain of the system. Nevertheless, in the search for methods of reducing the common mode sensitivity of the system, obviously trivial 'solutions' involving reduction of the system gain must be rejected.

Comparison of one system with another therefore requires some criterion or figure of merit analogous to the various measures such as Discrimination Ratio, Transmission Factor etc., which have been used in the course of the development of the differential amplifier. These factors are usually defined in terms of a ratio of the output voltages obtained when the same input is applied as a purely differential mode, and purely common mode, signal. When, as is usually the case, the output waveform for a common mode input is different from that for a differential mode input, it becomes difficult to attach an exact meaning to such a ratio. Sometimes the Transmission factor of an amplifier is measured using sine wave inputs and the ratio obtained at various frequencies quoted. While this information is more meaningful than a bald statement of the ratio, its usefulness is limited by the fact that the interfering common mode signal usually has different frequency components from the wanted differential mode signal. A criterion is required which is a property of the recording system rather than of the signal, is easily determined by direct measurement yet amenable to calculation without excessive labour, and gives an indication of the maximum interference to be expected from any common mode signal.

These requirements would seem to be met by defining a 'Step Function Rejection Ratio' for the overall recording system as the ratio of the peak output of the system for a step function input applied differentially, to the peak output for a step function input of the same amplitude but applied as a common mode signal. This ratio will be referred to as the 'Rejection Ratio' of a system in what follows.

To assess how high this Rejection Ratio must be to qualify a recording system for inclusion as part of an ideal stimulating and recording system, it is necessary to consider the value required to reduce to the system noise level the largest Common Direct artefact component likely to be encountered. Assuming a maximum likely value of 30Ω for $C_{d_{(p)}}$ and a stimulating current of 10 mA, the maximum common mode input to the recording system would be 300 mV. To restrict the Common Direct artefact component to no more than 3 μV peak, corresponding to a typical system noise level, would require a Rejection Ratio of 10^5 or greater.

This figure is in excess of that which might be expected from the best modern amplifiers alone, yet Haapanen and others have demonstrated that the performance of a complete recording system is often much inferior to that of a quite unpretentious amplifier.

Measurements in this laboratory of the Rejection Ratio of typical recording systems using electrodes ranging from silver plates for recording from the surface of the skin, to electrolytically thinned steel needles having tip diameters of around 10 μ, gave values from less than ten, to a maximum of six thousand.

Eqn. 4.3.5. gives the overall $M_{v_{(p)}}$ of a recording system as:-

$$M_{v_{(p)}} = M_{v_{a(p)}} m_{d_{(p)}} + M_{d_{a(p)}} m_{v_{(p)}} \quad \ldots\ldots 5.7.1.$$

where $M_{v_{a(p)}}$ and $M_{d_{a(p)}}$ are transfer functions of the amplifier and $m_{d_{(p)}}$ and $m_{v_{(p)}}$ are those of the electrode/input impedance network.

As reduction of $m_{d_{(p)}}$ and $M_{d_{a(p)}}$ will decrease the system gain, any reduction of $M_{v_{(p)}}$, and thus of the Rejection Ratio, must be achieved by decreasing $m_{v_{(p)}}$ and $M_{v_{a(p)}}$. Since no reliance can be placed on cancellation of the effects of the two terms of Eqn. 5.7.1., in an ideal system the amplifier should have an inherent Rejection Ratio of at least 10^5 and input impedances so high that when used with high impedance recording electrodes the overall Rejection Ratio for the complete recording system is maintained above this figure.

The modern differential amplifier has been developed to such an extent that the best examples (e.g. Richards 1956) have inherent Rejection Ratios within a factor of two of the standard suggested above, while the use of entirely 'floating' amplifiers as advocated by Haapanen, Guld, and others, might be expected to give even higher inherent Rejection Ratios. It is unfortunate, therefore, that so little progress has been made in the design of amplifiers of high input impedance with a view to improving the overall Rejection Ratio.

Many recording systems have been designed with very high input impedances though such apparatus has usually been used to facilitate micro-electrode recording and not specifically as an anti-artefact measure. There seems little doubt that, when high impedance recording electrodes are employed, the use of a cathode follower in each input lead to a conventional differential amplifier will often improve the overall Rejection Ratio of the system. The benefit this confers through reducing the $m_{v(r)}$ of the electrode/input impedance network may however be partly offset by the degradation of the inherent Rejection Ratio of the amplifier itself due to dissimilar gains in the cathode follower stages. While circuits have been described in which manual balancing controls are used to restore the Rejection Ratio of the amplifier to some extent, the effect of such controls is invariably restricted by stray capacitance effects.

The theoretically unlimited Rejection Ratio of the truly 'floating' amplifier, coupled with the absence of any resistive connection to earth from its input (c.f. the grid leaks commonly used in conventional grounded differential

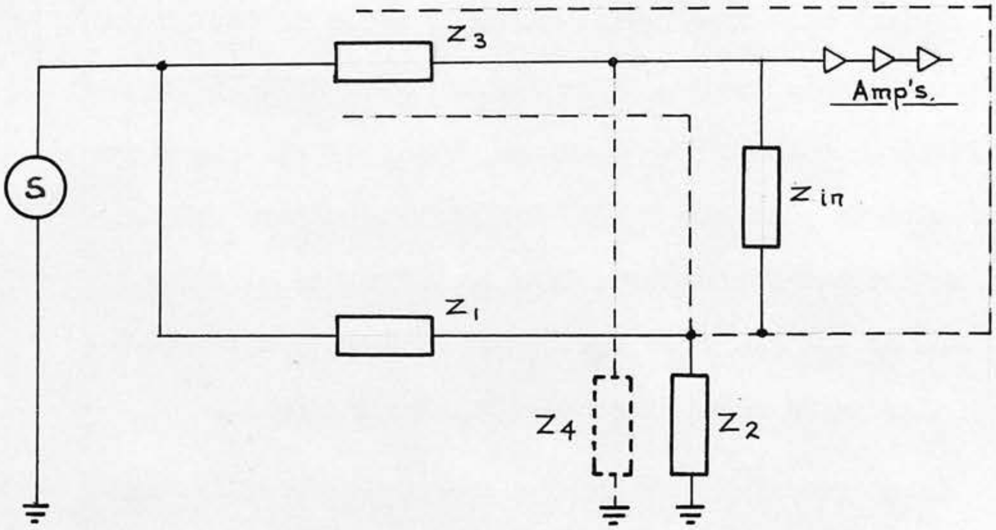

Fig 5.7.1.

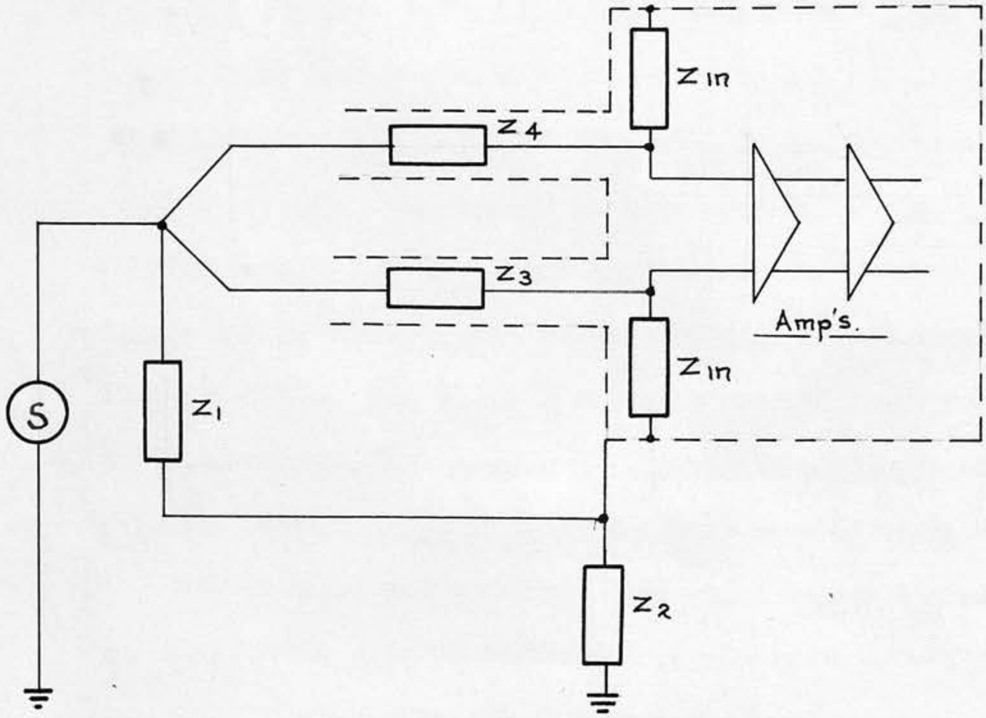

Fig 5.7.2.

amplifiers) has perhaps encouraged its support by several workers.

Since a truly 'floating' amplifier attains its high inherent rejection of common mode signals due to the absence of any connection to earth, it follows that the performance should be independent of the actual type of amplifier floated. This has led some workers (e.g. Haapanen 1953) to the erroneous conclusion that when a floating amplifier is used there is no advantage to be gained by retaining the usual differential amplifier circuit. On the contrary, consideration of practical systems using 'floating' amplifiers shows that the inevitable stray impedance to earth from such apparatus leads to a lower overall Rejection Ratio if a single ended amplifier is used instead of a differential amplifier.

Fig. 5.7.1. shows a single ended 'floating' amplifier fed by a common mode signal through electrode impedances Z_1 and Z_3. Since the screening of the amplifier may be extended along the input lead containing Z_3, the shunt impedance to earth from this lead, (Z_4), may be very large compared with Z_1, Z_2, and Z_3. Conversely, the shunt impedance to earth from the side of the amplifier input which is connected to the chassis of the instrument may be relatively low, since it will include the capacitance to earth from the chassis of up to several hundred pF. The four impedances Z_1 to Z_4 form a bridge network for which $m_{v_{(p)}}$ is given by:-

$$m_{v_{(p)}} = \frac{1}{2}\,\frac{Z_1 Z_4 - Z_2 Z_3}{(Z_1 + Z_2)(Z_3 + Z_4)}$$

$$\doteq \frac{1}{2}\,\frac{Z_1}{Z_1 + Z_2} \qquad \text{when } Z_4 \gg Z_1, Z_2 \text{ and } Z_3$$

Physically, the response resulting from this finite value of

$m_{v_{(p)}}$ can be thought of as being due to the amplification of the voltage dropped across Z_1 by the current flowing to earth through Z_1 and Z_2.

In theory it should be possible to balance out this response by adjusting Z_4 so that $Z_1Z_4 = Z_2Z_3$, but in practice this may give poor results due to the awkward nature of some recording electrode impedances.

The use of a differential floating amplifier as shown in Fig. 5.7.2. would avoid much of this difficulty. In this case the common mode voltage applied to the overall system again causes a voltage drop across Z_1 due to the current flowing to earth through Z_1 and Z_2, but this voltage drop, instead of being subjected to the full amplification of the system as in the single ended case, produces a response only because of the common mode sensitivity of the sub-system within the dotted line. Even if the Rejection Ratio of this sub-system, comprising the amplifier with the electrode impedances and shunt capacitances from the input leads to the amplifier chassis, is poor by conventional standards, the overall Rejection Ratio of the floating differential system may be many times greater than that of the single ended version. Whereas, if the Rejection Ratio of the sub-system is high by conventional standards, that of the floating system might be exceptional.

A disadvantage of the differential system is disclosed when its use under practical recording conditions, instead of in the rather artificial test circuit of Fig. 5.7.2., is considered. This difficulty arises since although in the test circuit the chassis of the amplifier can be connected via Z_1 to the common mode voltage being injected into the recording electrodes, this cannot be so easily arranged when recording from an actual volume conductor preparation. In this case the extra electrode Z would have to be connected to the preparation at such a point that its potential was equal to the common mode component of the potentials at electrodes X and Y. While theoretically this might be possible in the simplest case where there is only one field in the preparation, when two or more fields are produced by currents of different waveforms the distribution of the resultant field will be a function of time so that no such electrode position could be found.

Despite this fundamental limitation of the system the idea of applying the common mode component of the recorded signal to drive the entire recording system, so that the net common mode signal seen by the system is reduced, is so attractive that considerable thought was given to ways in which this might be achieved. In the first place a voltage equal to the common mode component of the potentials at the recording electrodes must be derived automatically. Then some method of applying this voltage to the chassis of a floating differential amplifier, so that the whole amplifier circuit has a potential which is always equal to the common mode component of the electrode potentials, must be found.

The answer to the first part of the problem was suggested when it was recalled that the potential across the cathode load of a Long Tailed Pair amplifying stage is approximately equal to the common mode component of the potentials at its grids. (Appendix II).

If such an L.T.P. stage were connected to the same recording electrodes as a floating amplifier, the output from the L.T.P. cathodes could be used to drive the chassis

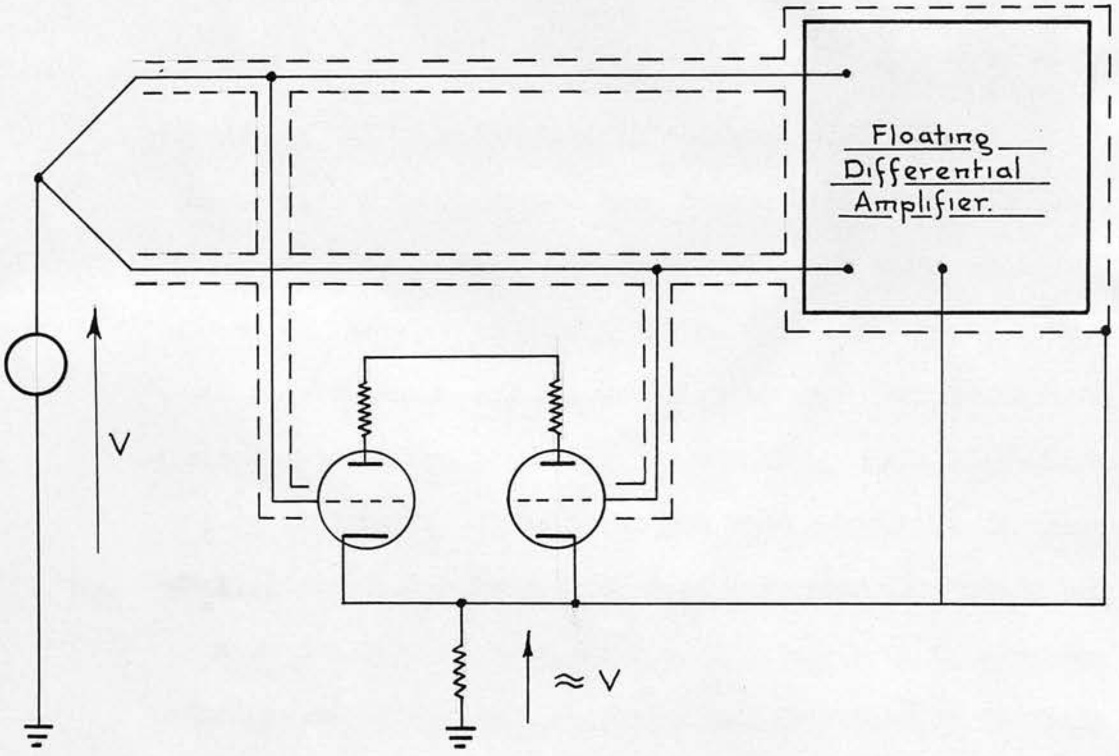

Fig. 5.7.3.

of the floating amplifier as shown in Fig. 5.7.3. Since the voltage at the cathode of this auxiliary L.T.P. is very nearly equal to the common mode input voltage V, the voltage between the two input leads and the floating amplifier chassis would be nearly zero so that the common mode response of the system would be much reduced. If the screening around the input leads were also connected to the L.T.P. output, the voltages between the leads and their screens would be reduced so that less current would flow through the capacitances to these screens than would have been the case had the screens been earthed normally. This can be regarded as being due to an apparent reduction in the input capacitances of the amplifier so that the system succeeds in increasing both the input impedance and the inherent Rejection Ratio of the amplifier.

Since the first stage of the floating amplifier would normally be a Long Tailed Pair to achieve the maximum initial Rejection Ratio for the amplifier, the possibility of a more elegant solution using this stage to do the work of the auxiliary L.T.P. stage in addition to its normal function as an amplifier, presented itself. The problem here was something of a paradox since if the scheme worked and the floating amplifier was driven to follow the common mode potential at the recording electrodes, both the common mode input to the L.T.P. stage and the output across its cathode load would be vanishingly small. How then could the first L.T.P. stage in the amplifier do the work of the auxiliary L.T.P. of Fig. 5.7.3. which has the full electrode potentials across its inputs and their common mode component at its output? The clue to the eventual solution was found in the vanishing potential across the cathode load. Fig. 5.7.4. shows how this potential was used as the error signal in a servo system

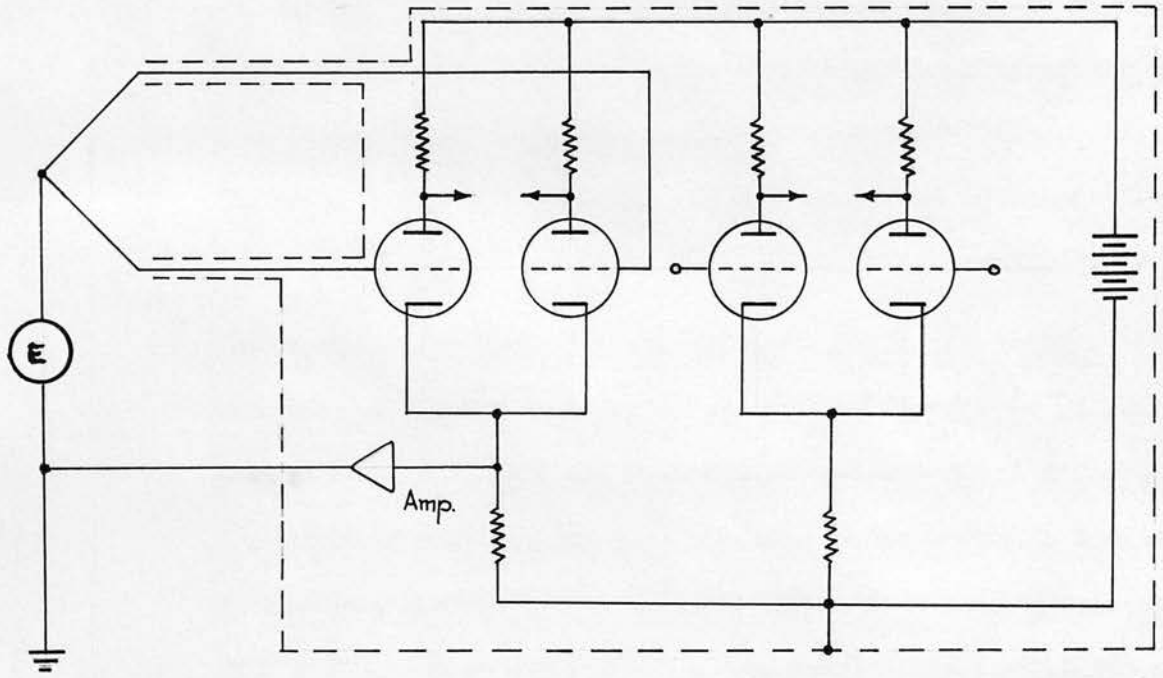

Fig. 5.7.4.

utilising an auxiliary amplifier which itself 'floated' with the recording amplifier.

The system is analysed in Appendix VI where it is shown that when the open loop gain of the servo amplifier is K, the net common mode input appearing at the floating amplifier is reduced by a factor of (K + 1).

Since, for a given common mode input to the system, the voltages across the capacitances between the input leads and the screening of the floating amplifier, which is also driven by the servo system, are reduced by a factor of (K + 1), the overall Rejection Ratio of the system is increased by (K + 1) times.

As in the case of the reduction of the apparent capacitance to earth of the stimulator, it would appear that sufficient increase in the loop gain K would increase the Rejection Ratio of the system without limit. Again, closer examination shows that the performance of the system is limited by the characteristics of the servo system, but that, so long as the loop is kept stable, and has a dominant pole the time constant of which is appreciably smaller than the high frequency cut off time constant T of the main amplifier stages, the artefacts obtained with the system will be negligibly different from those which would have been observed with an ideal servo loop of the same gain.

A pilot experiment using a commercial differential amplifier (Ediswan Portable EEG machine) confirmed the practicability of the scheme and indeed showed a fifty-fold increase in Rejection Ratio. Since this amplifier was far from ideal for the purpose, it was concluded that using a specially designed amplifier of high intrinsic performance, a recording system with an overall Rejection Ratio far in excess of that which might foreseeably be obtained by other means should result.

5.8 Reduction of the Differential Direct Component

It was argued in Section 5.5 that the simplest way in which the Differential Direct component of the artefact could be controlled would make use of two stimulating and recording systems, interconnected so that the Differential Direct component at their combined output could be reduced by balancing the contribution from one channel of the double system against that from the other.

For a good balance to be achieved, the waveforms of the two Differential Direct components must be very accurately matched at the point in the system where the signals are combined.

The more complex the two channels preceeding the point of recombination are, the more difficult becomes the problem of matching the channel characteristics to obtain similar waveforms at this point. Fortunately in practice a large part of the system can be shared between the two channels so that only those parts of the system peculiar to the individual channels need have carefully matched characteristics. Ideally then, the double system should take the form of a single stimulating and recording 'chain' which divides into two branches at some point in the system and recombines at a later point, such that the divided portion of the 'chain' contains only enough 'links' to provide two Differential Direct components for balancing one against the other.

For each Differential Direct component a stimulus

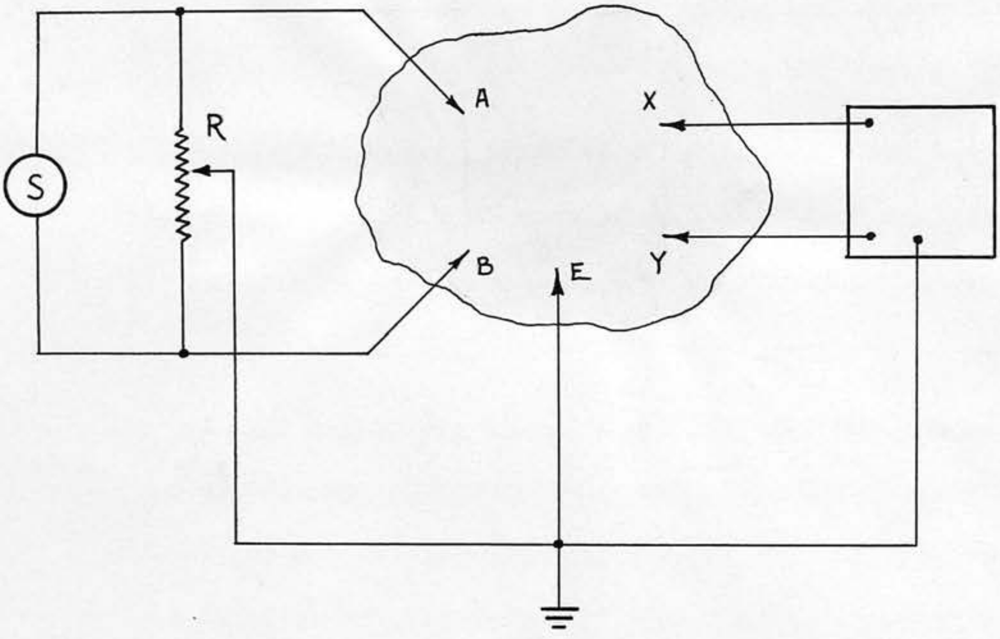

Fig 5.8.1.

field and a pair of recording electrodes acquiring a difference of potential in this field is required. The simplest way in which two Differential Direct components could be produced would utilise either a single pair of recording electrodes acted upon by two stimulus fields, or two pairs of recording electrodes operating in a single stimulus field.

The first of these alternatives leads naturally to some kind of 'Tripolar Stimulation' scheme, the simplest such system being the use of a 'Wagner Earth' across the stimulator as shown in Fig. 5.8.1. The stimulator S (necessarily of the constant voltage type) is shunted by a potentiometer R the slider of which is earthed. For maximum effectiveness the resistance of the potentiometer should be very low in comparison with the stimulating electrode impedances. The voltages of the stimulating electrodes A and B can then be adjusted differentially with respect to earth by variation of the setting of the slider of the potentiometer.

Except for one position of the slider, a net current must flow into, or out of, the preparation through the earth electrode E in addition to the current flowing between A and B. Thus currents enter at A and E and leave at B, or current enters at A and leaves at B and E. In either case two stimulating currents can be regarded as flowing in the preparation, and by selecting the position of the slider to give currents appropriate to the positions of electrodes A, B and E, it may be possible to arrange the resultant stimulating field so that recording electrodes X and Y lie on the same equipotential. The elimination of the potential difference between the recording electrodes in this way can be interpreted as being due to the cancellation of the Differential Direct artefact components due to the two stimulating currents.

As it stands this scheme has several shortcomings, some of which must arise in any Tripolar Stimulation system.

(1) Since a substantial fraction of the stimulating current enters or leaves the preparation at the earth electrode E, the risk of spurious stimulation at this point is greatly increased. Even if this does not happen, variation of the effective stimulus with alteration of the relative magnitudes of the two currents in a Tripolar Stimulation scheme can occur. (Bishop and Clare 1953).

(2) The use of a low impedance (constant voltage) source leads inevitably to differences in the waveforms of the two stimulating currents unless the stimulating electrode impedances are identical.

The arrangement used by Bishop and Clare (1953) avoided this difficulty by using constant current stimuli provided by a battery and high series resistances. Although the current waveforms in this case would be relatively unaffected by the electrode impedances, the waveform matching of the currents produced by such simple apparatus could not be expected to be very precise.

A more sophisticated tripolar stimulator might be constructed using valves or transistors to provide the necessary high output impedance. The matching of the current waveforms could then be more easily controlled but, in the case of the valve stimulator, it would be difficult to arrange an output having two anodes and a cathode. This physiologically more useful output arrangement could more readily be obtained using transistors, but a transistorised constant current stimulator would suffer from the limitations of available output voltage imposed by present transistor characteristics.

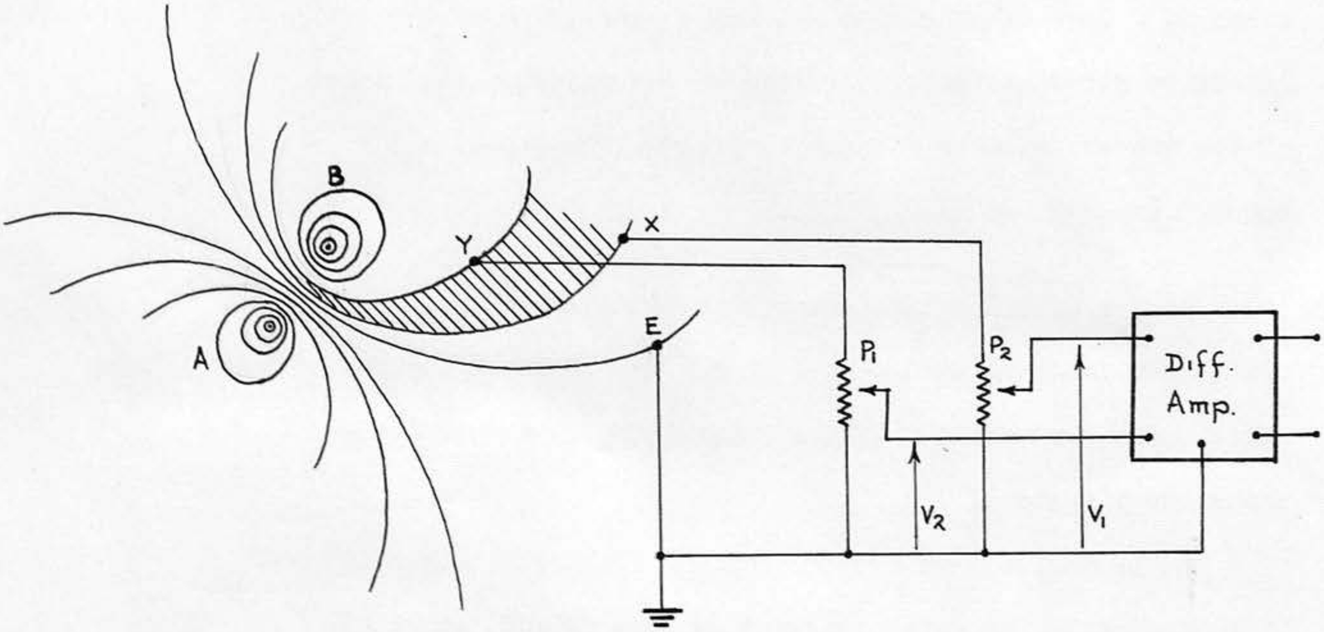

Fig 5.8.2.

(3) Even in theory it is not easy to formulate a rule giving the relationship between the two stimulating currents and the electrode positions which will guarantee cancellation of the artefact. In practice it was found that the system was difficult to operate, several changes of electrode position being necessary before cancellation of the artefact could be achieved.

(4) Both the constant current and constant voltage versions of the scheme lead to difficulties in controlling the other artefact components.

The 'Wagner Earth' (constant voltage) type, depending as it does on a deliberately introduced escape current, produces a relatively large voltage drop across the earth electrode impedance, while a floating constant current tripolar stimulator would obviously increase the difficulty of applying the capacitance reduction system of section 5.6.

(5) The attainment of perfect matching of the stimulating current waveforms would not in itself guarantee complete cancellation of the Differential Direct component, for should the assumption of a perfectly resistive preparation not apply due to polarization effects in the tissues, the waveforms of the voltages at the recording electrodes produced by the two currents may not match.

The alternative approach to the control of the Differential Direct component using two pairs of recording electrodes and one pair of stimulating electrodes appears to present fewer disadvantages.

Fig. 5.8.2. shows a pair of recording electrodes, X and Y, and an earth electrode E, lying in the field produced by a pair of stimulating electrodes A and B. It can be seen that unless the earth electrode E lies in the region

enclosed by the isopotential surfaces on which X and Y are situated, the potentials V_x and V_y of X and Y respectively must have the same sign although they may differ in magnitude. If the potentials V_x and V_y are applied to a pair of potentiometers P_1 and P_2 arranged as a differential attenuator, i.e. so that the output from P_1 is zero when that from P_2 is maximum and vice-versa, a position of the sliders of P_1 and P_2 must exist such that the outputs V_1 and V_2 are equal. If these outputs are applied to a differential amplifier having zero common mode sensitivity, the output of the system due to the stimulus field shown will be zero.

The operation of the system in rejecting this Differential Direct artefact can be thought of in either of two ways. The recording system can be regarded as two single ended systems recording from two pairs of recording electrodes XE and YE in the same stimulus field. Since one side of each recording system input is earthed the differential mode component of the voltage at each pair of recording electrodes is equal to the common mode component. The two Differential Direct components (and hence the Common Direct components) are thus eliminated by balancing one against the other. Alternatively the recording system can be regarded as a differential one using electrodes X, Y and E. In this view the Differential Direct component of the artefact is eliminated by balancing it against the Common Direct Component.

From either point of view it is seen that in principle the system could be used to eliminate both the Common and Differential Direct components so that when used with a stimulator giving negligible escape current, simultaneous control of all four artefact components could be achieved.

One of the attractions of this scheme is its independence of the type of stimulator used so that full advantage can be taken of the method proposed in section 5.6 for controlling the escape current by artificial reduction of the stimulator capacitance to earth.

Another advantage of the system is the relative ease with which it can be applied in comparison with the Tripolar Stimulation scheme. This follows from the almost unrestricted choice of positions for the electrodes possible with this arrangement. For any given positions of the recording electrodes X and Y the earth may be placed anywhere in the preparation with the exception of the 'forbidden zone' shown shaded in Fig. 5.8.2. There is thus only a rather restricted choice of positions for the earth electrode for which the system will not work; in all other positions success is guaranteed, in theory at least.

This advantage was apparent in practice, it being found much easier to select electrode positions enabling the artefact to be minimised using the Differential attenuator scheme than had been the case with the Tripolar Stimulation system.

While confirming the expected advantages of the system in controlling the Differential Direct artefact component, the same trials demonstrated some of the disadvantages inherent in the system as exemplified in Fig. 5.8.2.

For a given setting of the sliders of the potentiometers of the Differential attenuator there will be zero response to any field in the preparation in which the recording electrodes X and Y acquire potentials in the same ratio as they have in the field selected for rejection. Since the rejected field is not unique it is conceivable that some wanted signal may be lost if its field at the recording electrodes happens to fulfil this condition. This implies no restriction on the system which does not apply equally to every other system, since it is always possible that the two recording electrodes needed in the simplest of systems, may lie on the same equipotential surface of the field of a wanted signal.

Since for complete cancellation a field must satisfy the special condition that it must produce potentials in an exactly specified ratio at X and Y, in general a given field in the preparation will not be completely cancelled, so that wanted signals, while possibly suffering some attenuation, are unlikely to be eliminated with the artefact. In practice, advantage can be taken of the relative freedom of choice in the matter of electrode positions so as to arrange the electrodes to favour the wanted signals.

The existance of some, and possibly considerable, sensitivity to all fields save those fulfilling the special distribution required for rejection, underlies the most serious disadvantage of the system, namely the sacrifice of the rejection of common mode signals.

Except at the central position of the sliders of the Differential attenuator the system will respond to fields which result in a purely common mode signal being applied to X and Y. While this does not affect the rejection of the Common Direct component of the artefact, the contribution of the recording system to the rejection of the Common Escape component, which was anticipated in section 5.6., is destroyed. The decreased rejection of common mode signals may also result in excessive interference from hum and other artefacts producing common mode signals at the recording electrodes.

This difficulty is illustrated in Appendix VII A,

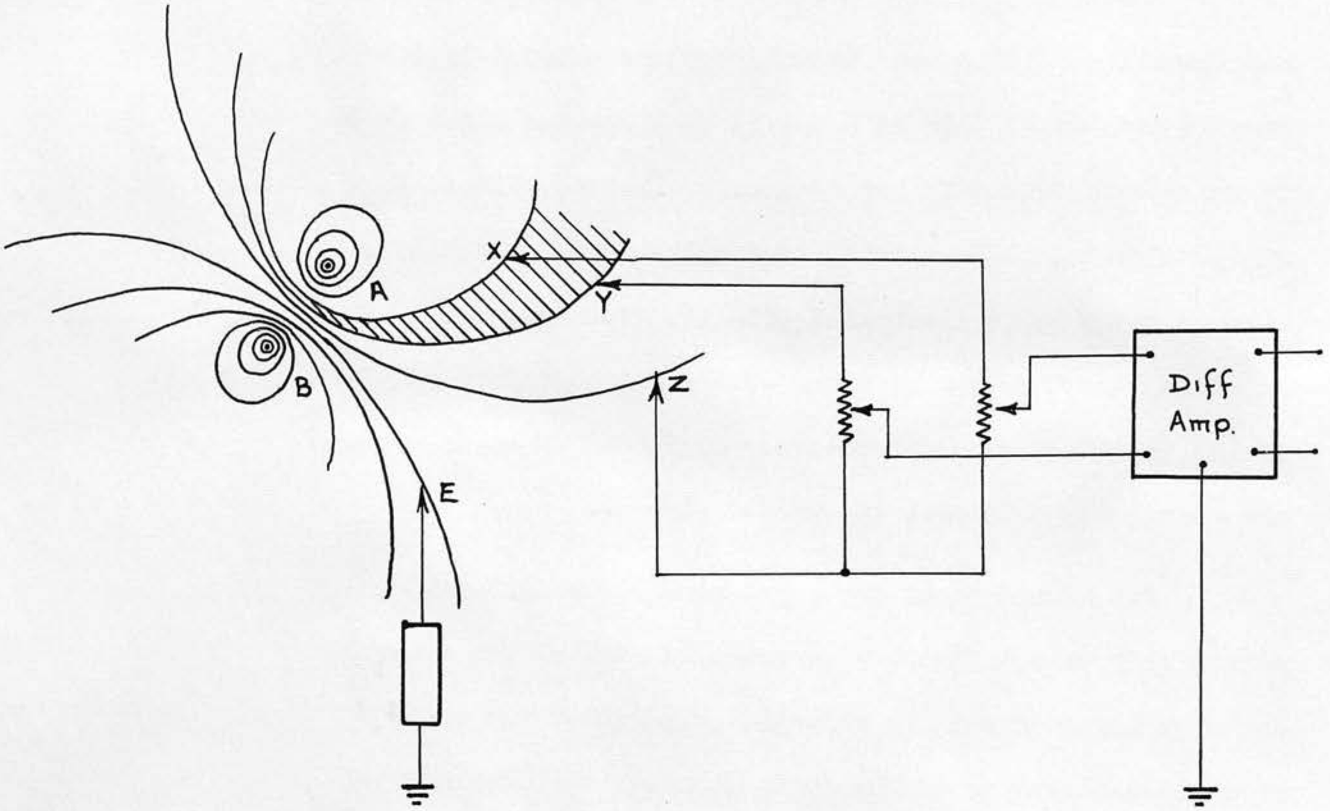

Fig. 5.8.3.

where it is shown that the voltage drop across the earth electrode impedance caused by the escape current and other interfering sources is not rejected in general by this system.

It was observed that this defect of the system of Fig. 5.8.2 can be attributed to the fact that the lower ends of the two potentiometers of the Differential attenuator are returned to the earth side of the earth electrode impedance, with the result that the whole of the voltage drop across the earth electrode impedance appears across each potentiometer.

This feature is eliminated in the modified system illustrated in Fig. 5.8.3. Here an extra electrode Z is introduced into the recording system to connect the lower ends of the Differential attenuator to the preparation. Appendix VII B analyses the results obtained with such a system when both a stimulating and an escape field are present in the preparation. It is shown that, provided the third electrode Z does not have a potential in the stimulus field intermediate between those of the recording electrodes X andY, (i.e. Z does not lie in the 'forbidden zone' shaded in Fig. 5.8.3.), a setting of the Differential attenuator can be found such that the voltage between its sliders produced by the stimulus field is zero. At the same time any potential common to all three electrodes X, Y and Z, will produce no difference of potential across the Differential attenuator output.

When set to reject the stimulus field the output of the attenuator will contain only a small voltage representing the difference between the Differential Escape components of the artefact picked up between electrodes X and Z, and Y and Z, and it has already been assumed (Section 5.6) that these will be adequately controlled by the low capacitance

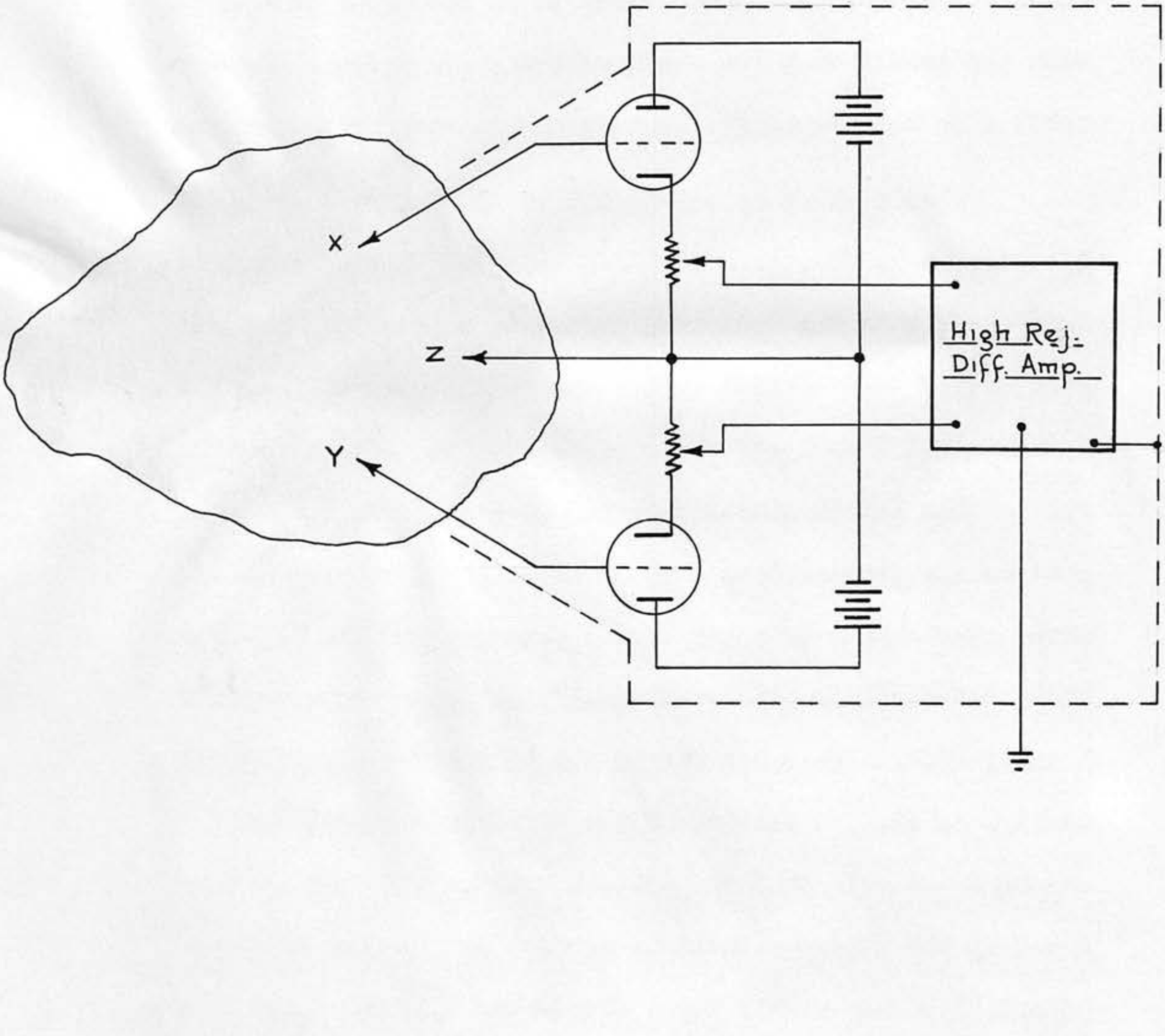

Fig 5.8.4.

stimulator.

Potentials common to X, Y and Z appear as a common mode input to the amplifier used in Fig. 5.8.3., so that an amplifier of high inherent Rejection Ratio is required in this position. The analysis of Appendix VII takes no account of stray impedances to earth from the Differential attenuator circuit, but it is evident that any such impedance which is not very large in comparison with the attenuator output impedance may spoil the rejection of the common mode signal. At the same time, the impedance of the potentiometers of the Differential attenuator must be large compared with the recording electrode impedances if distortion of the waveforms across the potentiometers is to be avoided when the electrode impedances are not resistive.

Fig. 5.8.4. shows how these apparently conflicting requirements can be met by the use of cathode followers as part of the Differential attenuator to provide a high input impedance as seen by the electrodes, and facilitate a low output impedance feeding the main amplifier.

If the main amplifier is of the high rejection type described in section 5.7, its screening, maintained at the common mode input potential, may be extended to surround the entire Differential attenuator unit so that the stray admittance to earth of the circuit would be much reduced.

As in the case of the Tripolar Stimulation scheme the effectiveness of the system in controlling the Differential Direct component depends on the assumption of a resistive preparation. In so far as polarization effects are present in the tissues, the distribution of the stimulus field in the preparation will vary with time during the stimulus pulse so that the waveforms of the potentials across the potentiometers of the Differential attenuator will differ.

Under extreme conditions when the value of D_d associated with each pair of recording electrodes is of the order of 50Ω and a stimulating current of 10 mA is used, a voltage of 500 mV will appear across each potentiometer. To reduce the resultant Differential Direct artefact to a few microvolts then requires that the Differential attenuator be set to an accuracy of around one part in 10^5, and that the waveforms across each half of the attenuator are matched to this order of accuracy.

It seems unlikely that the waveforms picked up from actual tissues could be matched to this extent, and since no way of overcoming this difficulty can be envisaged, it is concluded that tissue polarization effects must set a final limitation on the extent to which the Differential Direct component of the artefact can be controlled. Nevertheless when recording electrodes X and Y are relatively close together in the tissue, the difference in waveforms across the two potentiometers of the Differential attentuator may be small enough to allow a considerable reduction in the artefact.

Since the Differential attenuator scheme seemed to offer the most promising solution to the problem of controlling the Differential Direct component of the artefact, it was chosen to complete the proposed general anti-artefact system.

5.9 Summary

Consideration of the problem of artefact reduction in general has led to the conclusion that it is desirable to be able to reduce all four artefact components to the noise level of the recording system.

To do this under the worst conditions likely to be met in practice would require a stimulator having a total capacitance to earth of around 1 pF., a recording system having a Rejection Ratio of the order of 10^5, and a means of balancing out the Differential Direct component at the recording electrodes also with an accuracy of the order of one part in 10^5.

The possibility of polarization effects in the tissues of the preparation makes it doubtful whether apparatus meeting this last requirement could in fact be fully utilised under practical conditions.

The ways in which these requirements might be realised have been discussed leading to the selection of the Low Capacitance Stimulator, High Rejection Ratio Amplifier, and Differential Attenuator Unit, as component parts of an optimum anti-artefact system.

The development of this apparatus in a practical form is described in the next chapter.

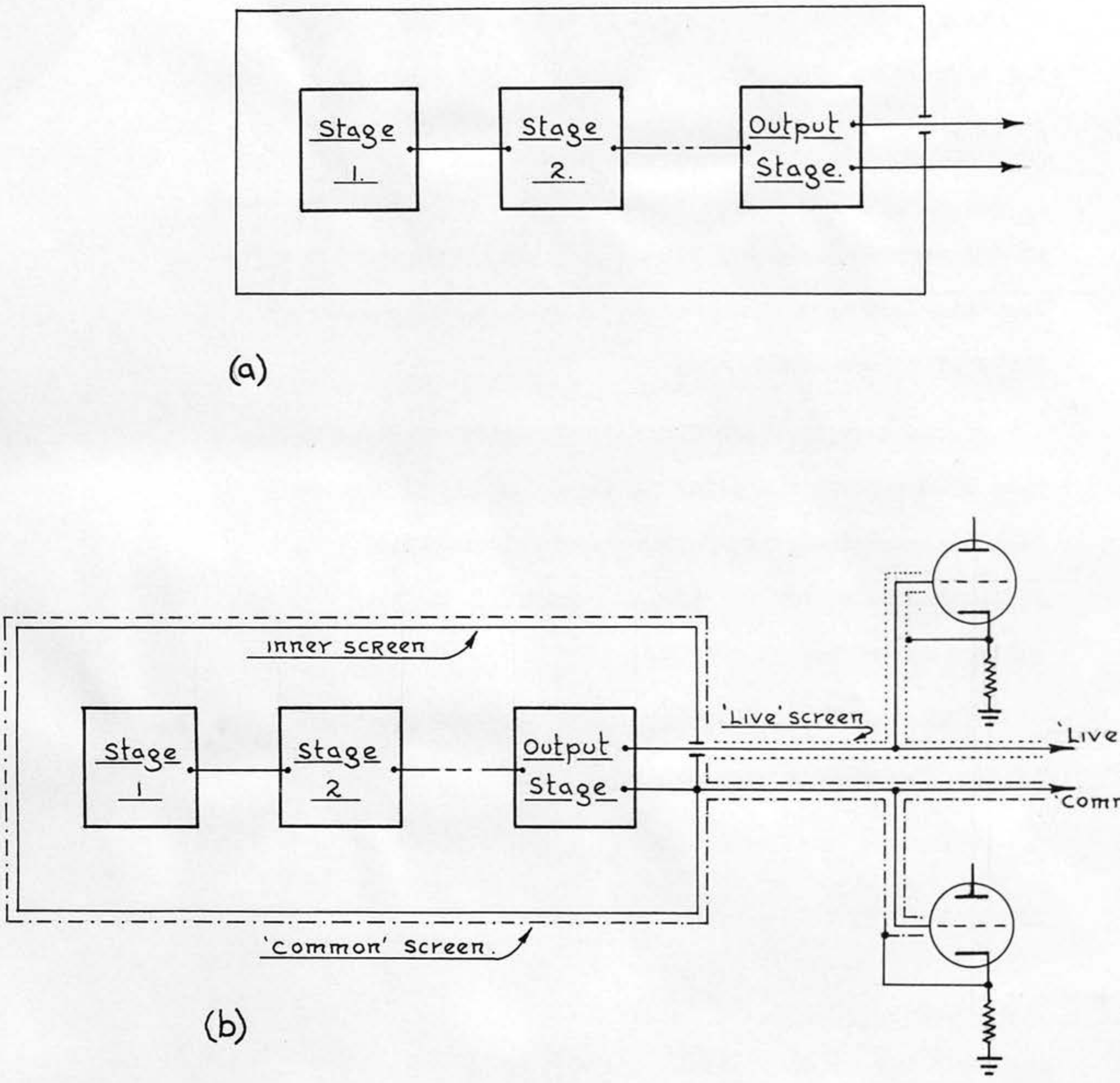
Stage 1.
Stage 2.
Output Stage.
(a)
inner screen
Stage 1
Stage 2
Output Stage
'Live' screen
'Live
'Comm
'common' screen.
(b)

Fig. 6.1.1.

CHAPTER SIX

Development of the Apparatus
for the
Anti-artefact System

6.1 The Low Capacitance Stimulator

This instrument was developed to demonstrate the possibility of constructing a mains operated stimulator having a range of facilities such as might normally be expected in a laboratory stimulator, giving a constant current output of up to 20 mA into loads of up to 10 KΩ at least, yet having an apparent capacitance to earth of around 1 pF.

Fig. 6.1.1. shows the basic screening arrangement. The stimulator is constructed in a metal box to which one of the output terminals, referred to as the 'common' terminal, is connected. (Fig. 6.1.1.(a)) This ensures that the circuit behaves as a simple two terminal generator as assumed in Section 5.6., all exposed parts of the stimulator being at the potential of one or other of the two output terminals. An outer screen is arranged round the metal box containing the stimulator and extended along the entire length of the 'common' output lead, while a separate screen is provided for the other, 'live', output lead. (Fig. 6.1.1.(b)).

Each of the two outer screens is connected to the output of a cathode follower which is fed from the side of the circuit protected by that screen.

If the cathode followers had unity gain there would be no potential difference between any part of the stimulator and its screening so that no currents could flow through the capacitances between the stimulator and its environment. This would give the same effect as reducing the capacitances between the stimulator and screening to zero. In practice the cathode followers cannot have exactly unity gain so that the capacitances to the screens are reduced by a finite reduction factor rather than eliminated. In addition, some parts of the stimulator circuit are inevitably exposed outside the screening, for example at the electrodes, so that there will always be a certain minimum unscreened capacitance to earth.

The residual capacitance to earth from each side of the stimulator circuit is thus made up of two components viz.

$$\text{Residual Capacitance} = \frac{\text{Initial Capacitance}}{\text{Reduction Factor}} + \begin{array}{r}\text{Unscreened Stray}\\ \text{Capacitance}\end{array} \qquad \text{..... 6.1.1.}$$

where the initial capacitance is that to the screening when the screening is earthed.

Ideally it would seem that the first term in Eqn. 6.1.1. should be reduced until the major part of the residual capacitance is due to the unavoidable stray capacitance represented by the second term. It was estimated that the unscreened stray capacitance might be kept to within a few tenths of a pF. so that the initial capacitance and reduction factor should be chosen to reduce the first term of Eqn. 6.1.1. to this order.

On the 'Live' side of the circuit the initial capacitance is virtually that between the inner conductor and screening of the output cable, but on the 'Common' side this cable capacitance is augmented by the capacitance between the

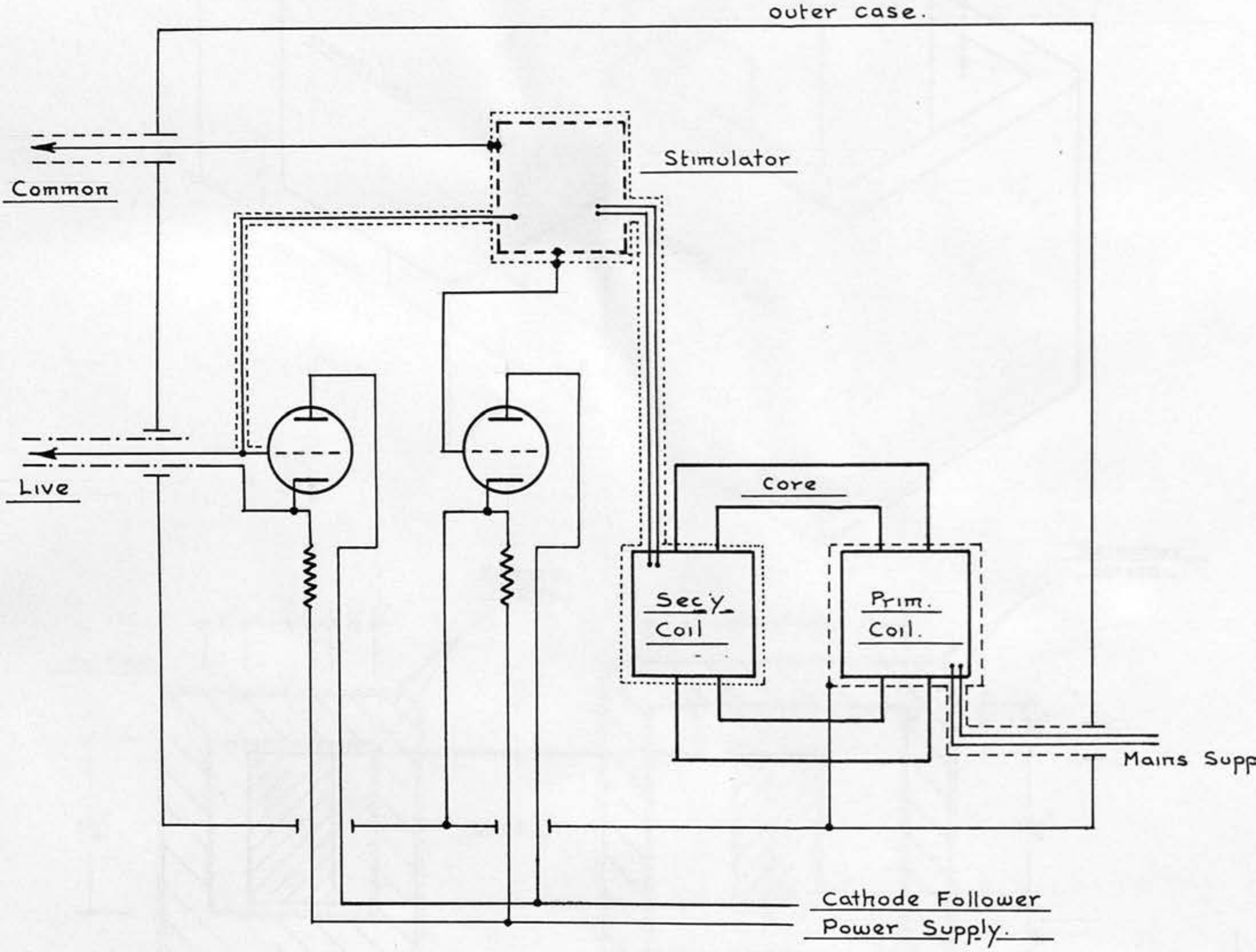
outer case.
Common
Stimulator
Live
Core
Secy
Coil
Prim.
Coil.
Mains Supp
Cathode Follower
Power Supply.

Fig 6.1.3.

inner and outer screens round the stimulator circuit. Most of this additional capacitance on the 'Common' side would normally be concentrated where the inner and outer screens pass between the windings of the mains transformer.

Experiment with metal boxes of various dimensions suggested that the capacitance between a case just large enough to contain the stimulator circuit (12" x $4\frac{3}{4}$" x $4\frac{1}{4}$") and an outer case of the largest size convenient for use on the bench (18" x 18" x 10"), would be around 20 to 30 pF.

On the other hand, judging from the capacitances measured between the screens and windings of several commercially available mains transformers, the capacitance between double screens passing through a transformer of normal construction might well be several hundred, perhaps over a thousand, pF.

To reduce the initial capacitance on the 'Common' side to a more reasonable value, a mains transformer was specially built to have the lowest practicable capacitance between the screen surrounding its secondary to its core and primary. The construction of this component is illustrated in Fig. 6.1.2. The primary and secondary windings were placed on opposite limbs of a large rectangular core and an unusually large air gap provided between the core and secondary winding. Screens of metal foil were arranged to cover the inner and outer surfaces of both windings, the secondary screen being connected to the 'Common' output lead of the stimulator, and the primary screen to the output of the 'Common' side cathode follower as shown in Fig. 6.1.3.

In this way the total capacitance between the common side of the stimulator circuit and the common side screening (including the outer case of the apparatus) was reduced to

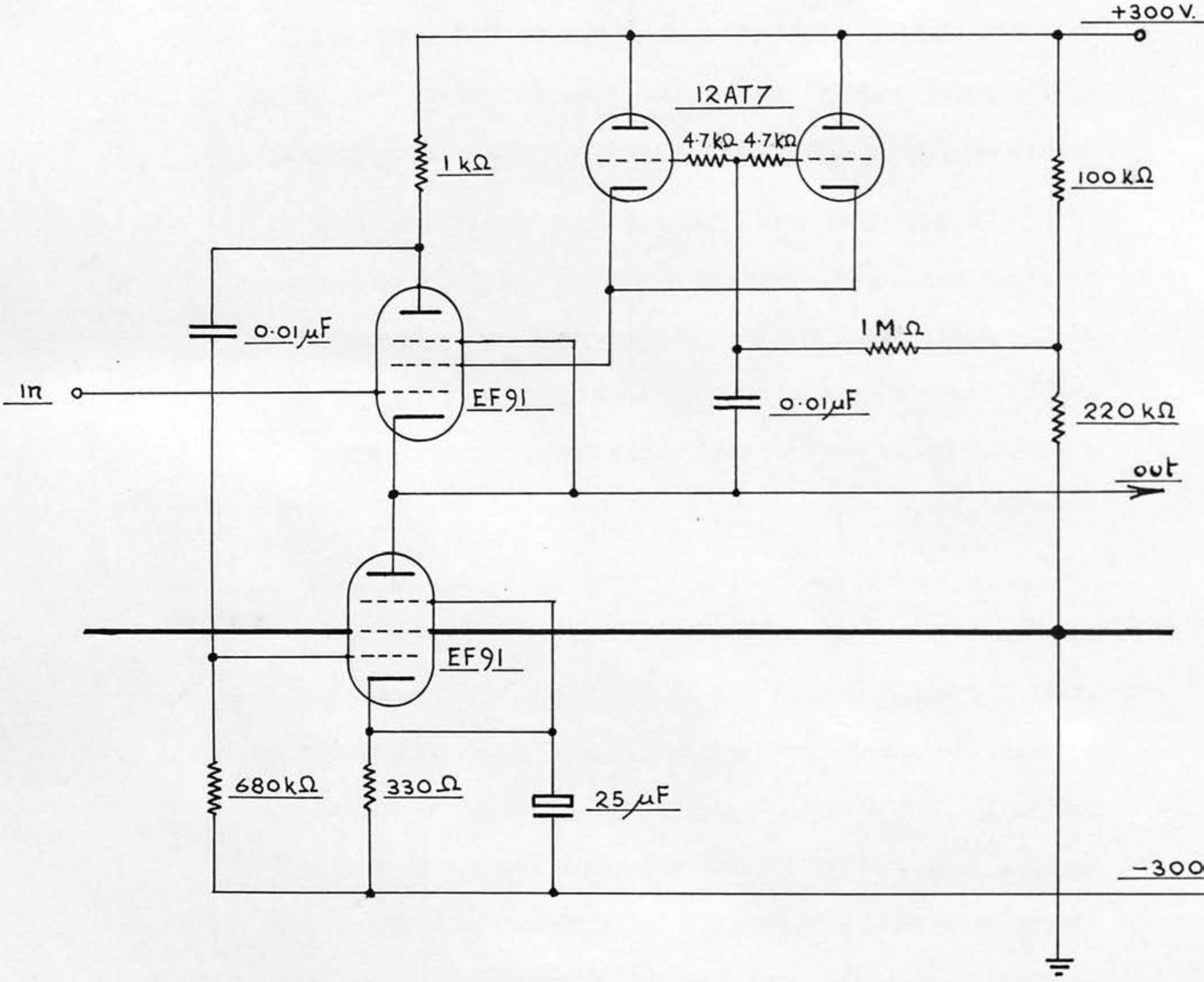
+300 V.
12AT7
4·7kΩ
4·7kΩ
1 kΩ
100 kΩ
0·01µF
1 MΩ
In
EF91
0·01µF
220 kΩ
out
EF91
680 kΩ
330 Ω
25 µF
-300

Fig 6.1.4.

approximately 130 pF. These values of initial capacitance to earth from the two sides of the stimulator circuit indicated that the reduction factor required should be at least a hundred if a total stimulator capacitance to earth approaching 1 pF was to be achieved.

Since a cathode follower with a gain of $\frac{K}{K+1}$ would yield a reduction factor of K + 1, to obtain a reduction factor of at least a hundred would require a cathode follower gain of at least 0.99. In this application the cathode followers must also work into capacitive loads of several hundred pF, depending on the proximity of earthed objects to the outer screens of the stimulator, and handle pulse inputs of up to around a hundred volts with rise times of a few microseconds. Most important of all, the input capacitance of the cathode follower stages must be much less than 1 pF, since this is in parallel with the reduced capacitance.

Since it was apparent that no simple triode or pentode cathode follower could meet this specification attention was turned to the more elaborate White cathode follower (White 1944). The modified version shown in Fig. 6.1.4. was developed using an auxiliary cathode follower to ensure that the potential of the screen grid of the upper valve of the White circuit followed that of its cathode and grid, thus minimising the input capacitance of the circuit while imposing minimum load on the output.

The input capacitance of this circuit, estimated by observing the effect on the rise time of a pulse applied to the input, of the insertion of a high resistance in the input lead, appeared to be of the order of 0.1 pF. The gain of the circuit, measured using a calibrated attenuator and high rejection ratio differential amplifier to compare the signal

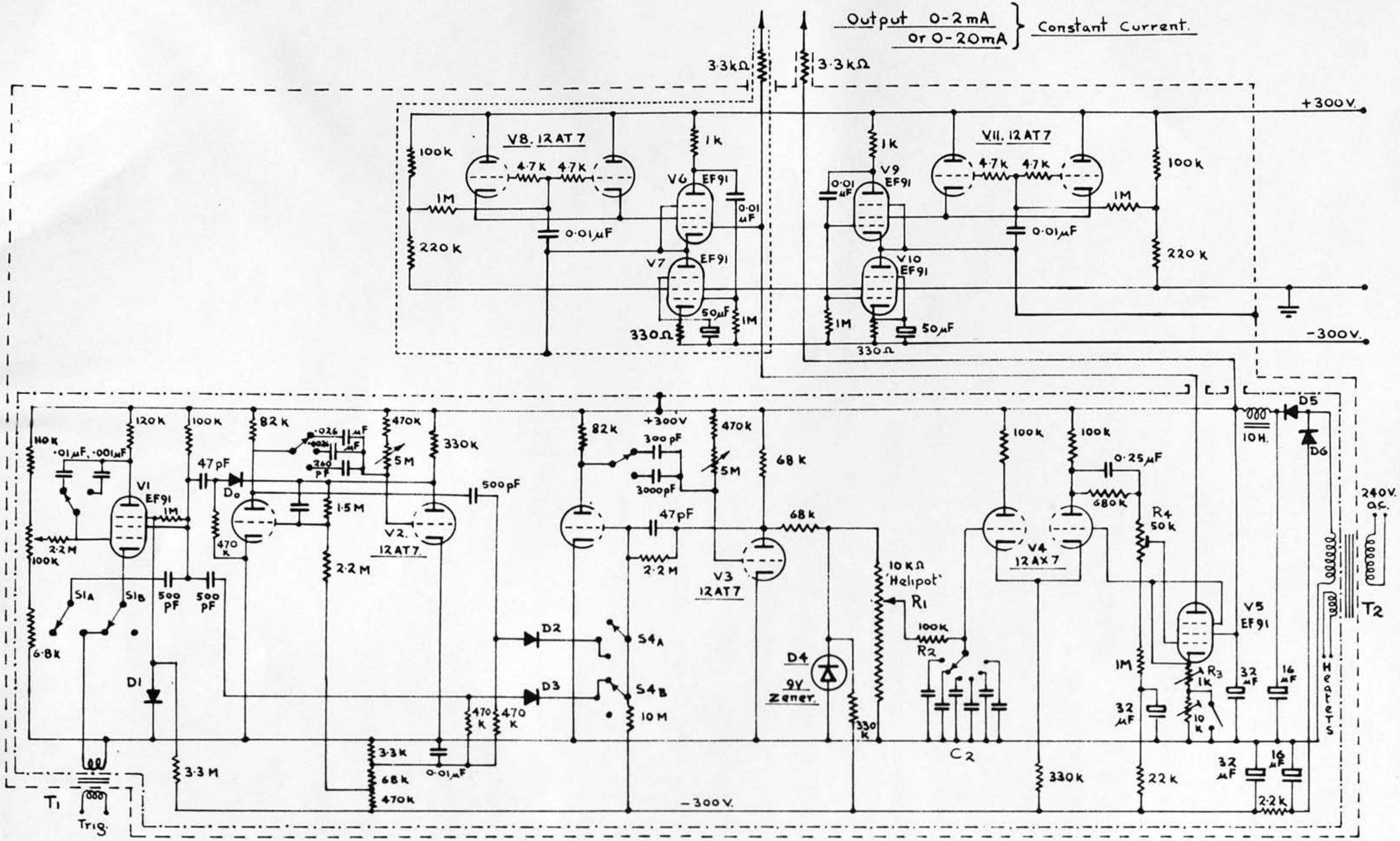
Output 0-2mA
or 0-20mA
Constant Current.
3·3kΩ
3·3kΩ
+300V.
-300V.
V8. 12AT7
V11. 12AT7
V6 EF91
V7 EF91
V9 EF91
V10 EF91
100k
1M
220K
4·7k
4·7k
0·01μF
1k
0·01 μF
50μF
330Ω
1M
V1 EF91
120K
110K
·01μF. ·001μF
2·2M
100K
6·8K
S1A
S1B
500 pF
500 pF
D1
T1
Trig.
3·3M
100K
47pF
D0
470 K
82K
·026 μF
·0026 μF
260 pF
1·5M
2·2M
470K
5M
330K
V2. 12AT7
500pF
470 K
470 K
3·3k
68k
470k
0·01μF
D2
D3
S4A
S4B
10M
82K
+300V
300 pF
3000pF
47pF
2·2M
470K
5M
68 K
68k
V3 12AT7
D4
9V Zener.
330 K
10KΩ 'Helipot'
R1
100K
R2
C2
-300V.
V4 12AX7
100k
100k
0·25μF
680K
R4 50K
330K
1M
32 μF
22K
V5 EF91
R3 1K
10 K
32 μF
16 μF
32 μF
16 μF
2·2k
10H.
D5
D6
240V. a.c.
Heaters
T2

Fig. 6.1.5.

between the input and output terminals with that across the input, was found to be $1 - 10^3$ (i.e. 0.999 approximately). The output impedance, deduced by observing the drop in output when a known resistance was connected across the output terminals, was 10 ohms.

Cathode follower units of this design were built for use on both the 'Live' and 'Common' sides of the stimulator circuit.

The design of the stimulator proper was determined mainly by the needs of other workers in the laboratory at the time. The circuit of the complete apparatus is shown in Fig. 6.1.5. Stimulus pulses are initiated either by an external trigger pulse applied through transformer T_1, constructed similarly to the special mains transformer, or by the master oscillator V_1, a Phantastron giving pulse repetition rates from 0.5 to 50 pulses per second. Pulses from this stage can be used to trigger the pulse generator stage V_3 either directly, or indirectly through the delay stage V_2, or by both routes simultaneously. The delay stage provides an output pulse after a period variable from 100 µ Sec. to 100 m Sec. after being triggered by the first stage. The pulse generator stage thus delivers a pulse coincident with, or delayed with respect to the pulses from the first stage, or a pair of pulses for each initiating pulse with the interval between the pulses of a pair determined by the delay stage.

The duration of the pulses produced by the pulse generator stage is continuously variable from 100 µ Sec. to 10 m Sec. To ensure that the pulses are 'flat topped' and of constant amplitude, they are clipped by the zener diode D_4 before application to the output current control R_1. The

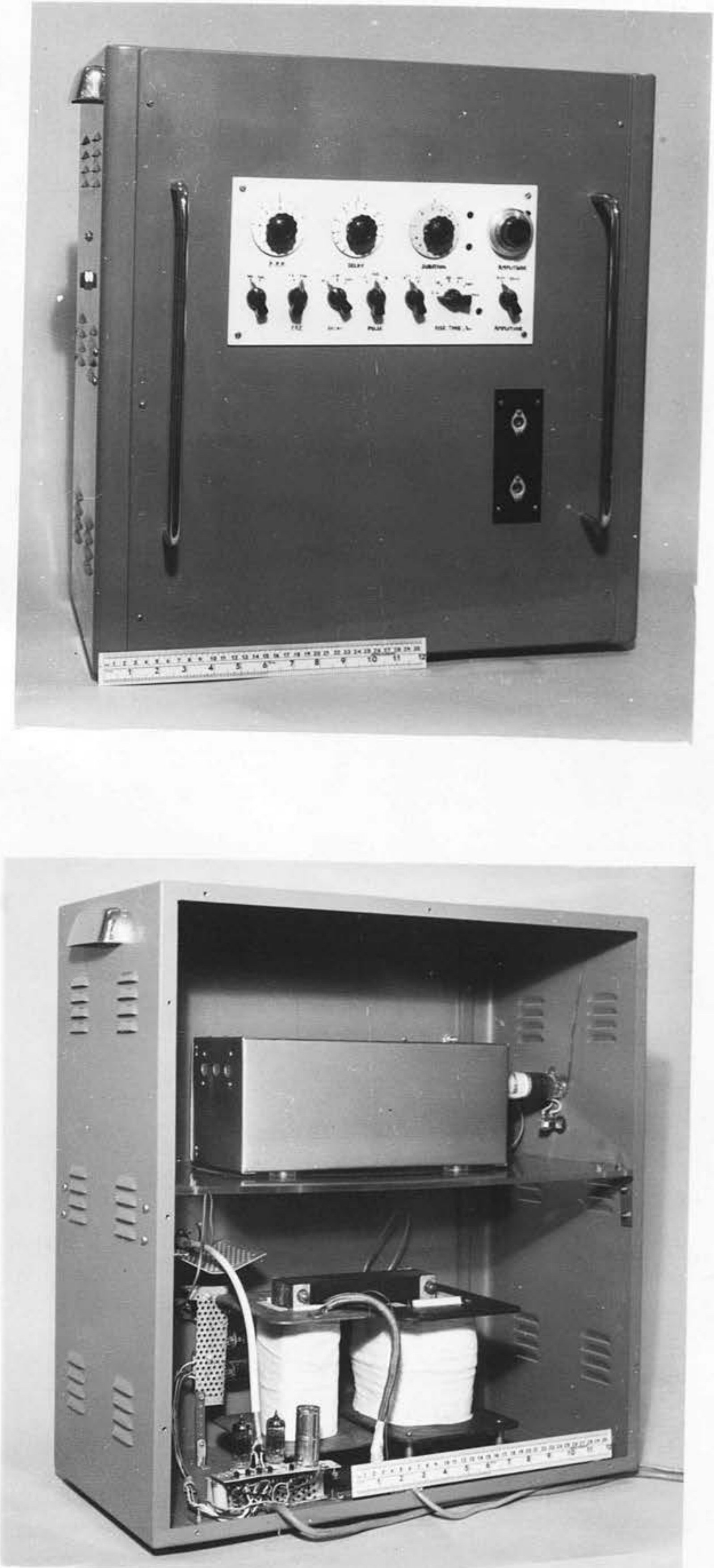

Fig. 6.1.6.

The Stimulator.

rise and fall time of the output pulses is determined by R_2 and C_2 and can be varied from 1 µ Sec. to 1 m Sec.

The shaped pulses so obtained are applied to the servo assisted constant current output stage (V_4 and V_5). V_4 operates to minimise the difference between the voltage across the cathode resistor of the output valve V_5 and the voltage across C_2. The current through the output valve is thus almost exactly proportional to the voltage applied to the output stage, the constant of proportionality being determined by the value of R_3 which was chosen to give maximum outputs of 2 and 20 mA. Output current between pulses can be adjusted to zero by means of the pre-set control R_4.

This arrangement gives an output impedance at least an order of magnitude higher than could be obtained with a simple pentode constant current source, and much improved linearity of the output current control scale. The circuit is also relatively independent of changes in the characteristics of the valves and supply voltages.

To ease the design of the special low capacitance mains transformer T_2, the stimulator was designed to consume the minimum current consistent with obtaining the required performance from each stage, the total H.T. current drain being 13 to 20 mA. The H.T. and Bias voltages are provided by half wave semiconductor rectifiers D_5 and D_6. The two cathode follower units comprising V_{6}, $_7$ and $_8$, and V_9, $_{10}$ and $_{11}$ are supplied from a conventional power unit external to the stimulator. They were constructed on subchassis mounted within the outer case of the stimulator as can be seen in the rear view of the instrument in Fig. 6.1.6.

The performance of the circuit as a stimulator was found to be more than adequate for all the applications in

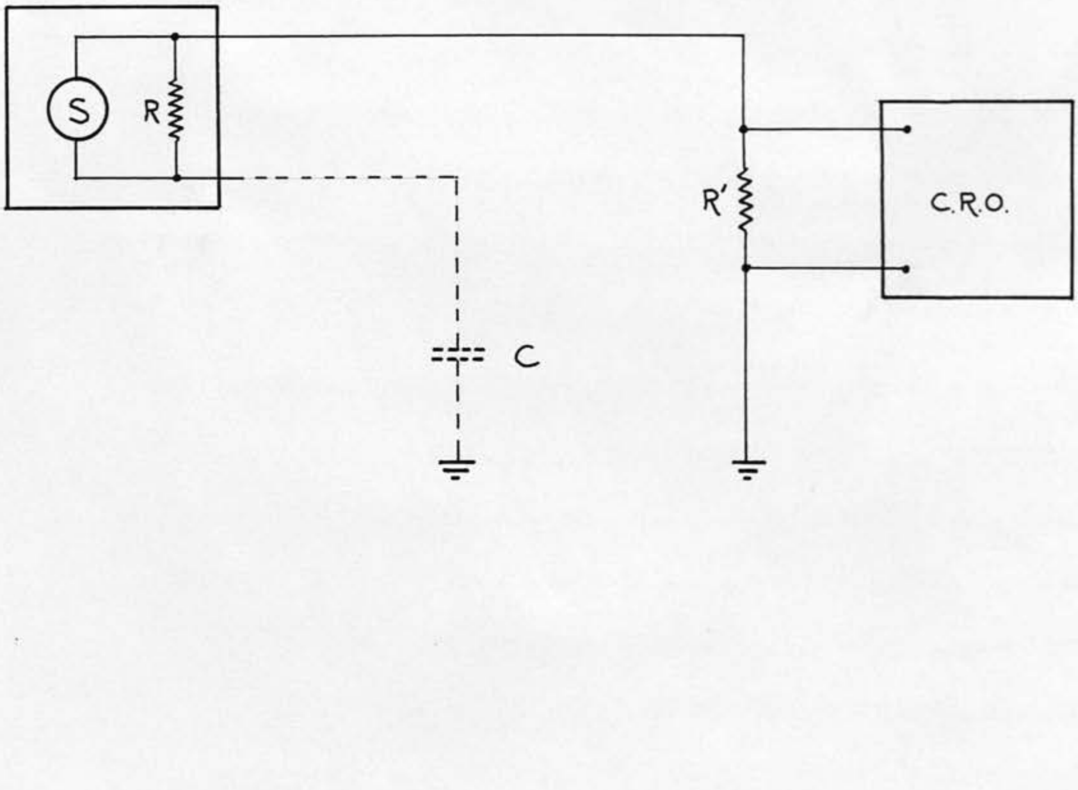

Fig 6.1.7.

this laboratory. The output impedance, measured on the 2 mA range, was 24 MΩ so that the stimulating current was virtually independent of the impedance of the stimulating electrodes (less than 0.5% change in current for a change in electrode impedance from zero to 100 KΩ). The instrument proved to be remarkably stable, no adjustments being necessary, after initial calibration, over a period of eighteen months involving an estimated two thousand hours use.

The effective capacitance to earth of the stimulator was measured using the scheme illustrated in Fig. 6.1.7. The output terminals of the stimulator were connected together by a resistance R inside the stimulator case so that the instrument became essentially a voltage generator of output resistance R. One terminal of the stimulator was connected to earth through a resistance r across which the voltage drop due to the current flowing to earth from the other terminal through the capacitance C, could be measured.

If the stimulator produces voltage pulses of amplitude E and rise time constant λ, at the rising and falling edges of the pulses a current will flow through r given by:-

$$I_{(p)} = \frac{E\,C}{\lambda - T}\left[\frac{1}{p + 1/\lambda} - \frac{1}{p + 1/T}\right] \quad \ldots\ldots 6.1.2.$$

where $T = (R + r)C$

$$\therefore I_{(t)} = \frac{E\,C}{\lambda - T}\left(e^{-t/\lambda} - e^{-t/T}\right) \quad \ldots\ldots 6.1.3.$$

Now, if $\lambda \gg T$, these charging and discharging transients become

$$I_{(t)} \doteqdot C\frac{E}{\lambda}\,e^{-t/\lambda} \quad \ldots\ldots\ldots 6.1.4.$$

so that the amplitudes of the transients are directly proportional to the capacitance to earth from the floating

Fig. 6.1.8.

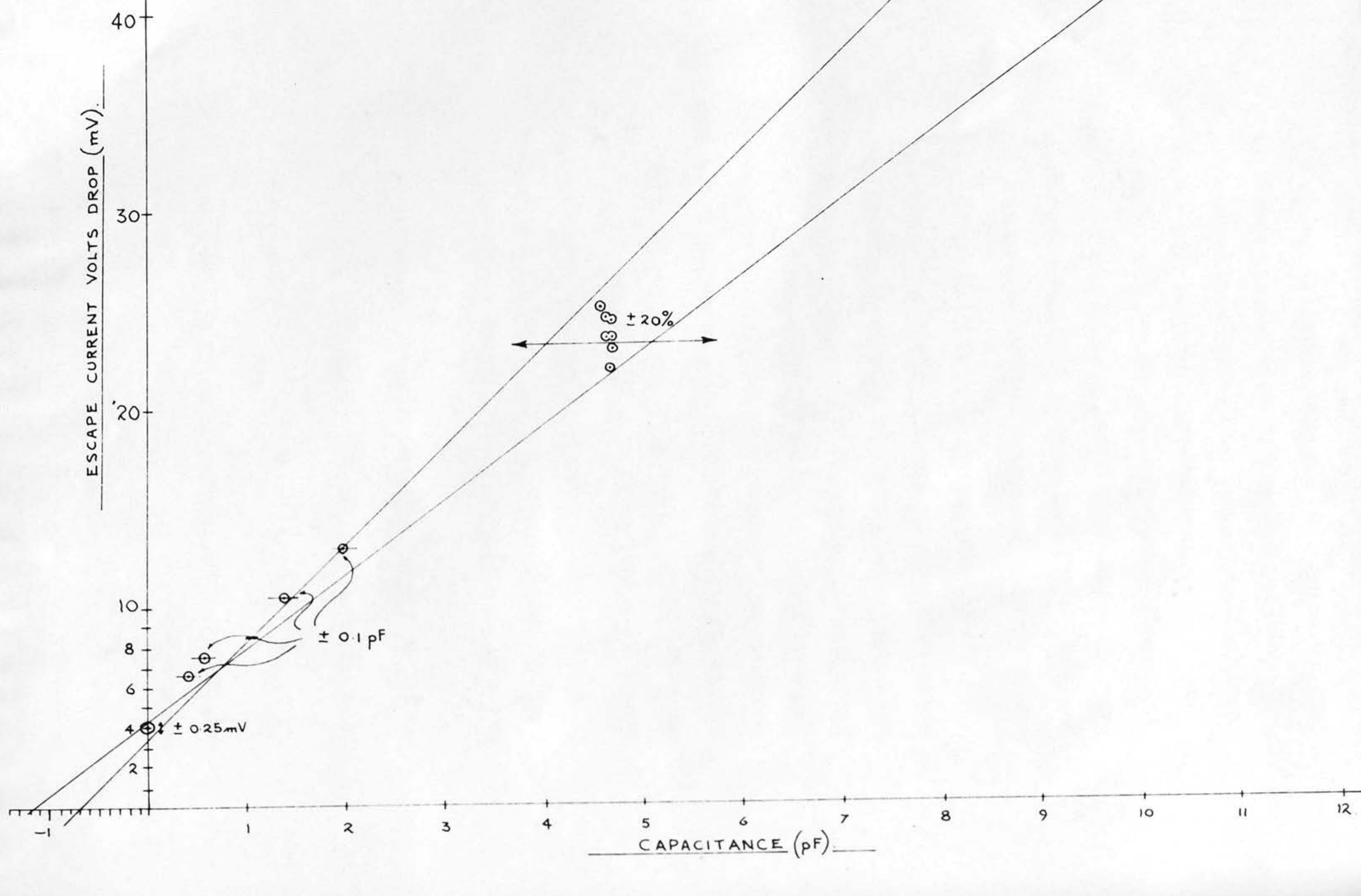
40
30
20
10
8
6
4
2
ESCAPE CURRENT VOLTS DROP (mV).
± 20%
± 0.1 pF
± 0.25 mV
-1
1
2
3
4
5
6
7
8
9
10
11
12
CAPACITANCE (pF)

terminal of the stimulator.

Assume then that the effective residual capacitance to earth from the floating terminal of the stimulator is x pF., and that a peak voltage V is observed across the sampling resistor r due to the charging transients $I_{(t)}$. If various known capacitances C are connected between the floating terminal and earth so as to add to x, and the corresponding values of V plotted against C, a straight line should be obtained since

$$\begin{aligned} V &= I_{(t)} r \propto (c + x) \\ &= KC + Kx, \text{ say, where K is a constant} \end{aligned}$$

This line cuts the C axis, (V = 0), at C = -x so that the value of the residual capacitance can be read off from the graph.

Using capacitors of known value, and pulses of rise time constant 3 to 30 μ Sec., with resistances R and r of a few kilohms, it was confirmed that the relationship between C and the peak charging current was a linear one within the limits of experimental error (usually in the region of ± 10% arising from uncertainty regarding the exact values of capacitance used) for capacitances up to 20 pF.

Fig. 6.1.8. is the graph obtained for the 'Common' side of the stimulator. The points for the lower values of added capacitance C were obtained using capacitors which had been previously standardised (± 0.1 pF) using a commercial Q - Meter.

Making the allowances shown by the boundary lines for possible errors in the values of the capacitors and in the measurement of the voltage, it was concluded that the value of the effective capacitance to earth from the 'Common' side of the stimulator was 1.0 ± 0.2 pF. A similar determination of the capacitance to earth from the 'Live' side of the stimulator gave a result of 0.15 ± 0.05 pF. Thus the total capacitance to earth of the stimulator was found to be approximately 1 pF.

The only disadvantage of the apparatus as built was as occasional tendency to instability in the cathode follower units when low resistance stimulating electrodes were used. This was entirely eliminated when the resistances of the electrodes were increased to 6 KΩ(common side) and 2.2. KΩ(live side).

Since time was not available for a full investigation of the stability of the circuit, extra resistances were inserted in the stimulator leads when low resistance electrodes were in use, an expedient which proved quite satisfactory.

6.2. The High Rejection Ratio Amplifier

The principle underlying the operation of this amplifier has been outlined in Chapter 5 section 7, where it was shown that a theoretically unlimited improvement in the overall rejection ratio of a recording system could be obtained if the potential of the whole system was made to follow that of the common mode component of the voltage at its input, using an auxiliary servo amplifier itself part of the floating recording system. Since the output of this servo amplifier would be applied between the circuit of the recording system and earth, the capacitance to earth of the entire floating system would appear across the servo amplifier output terminals. This is one of the factors which limits the practical performance of the scheme.

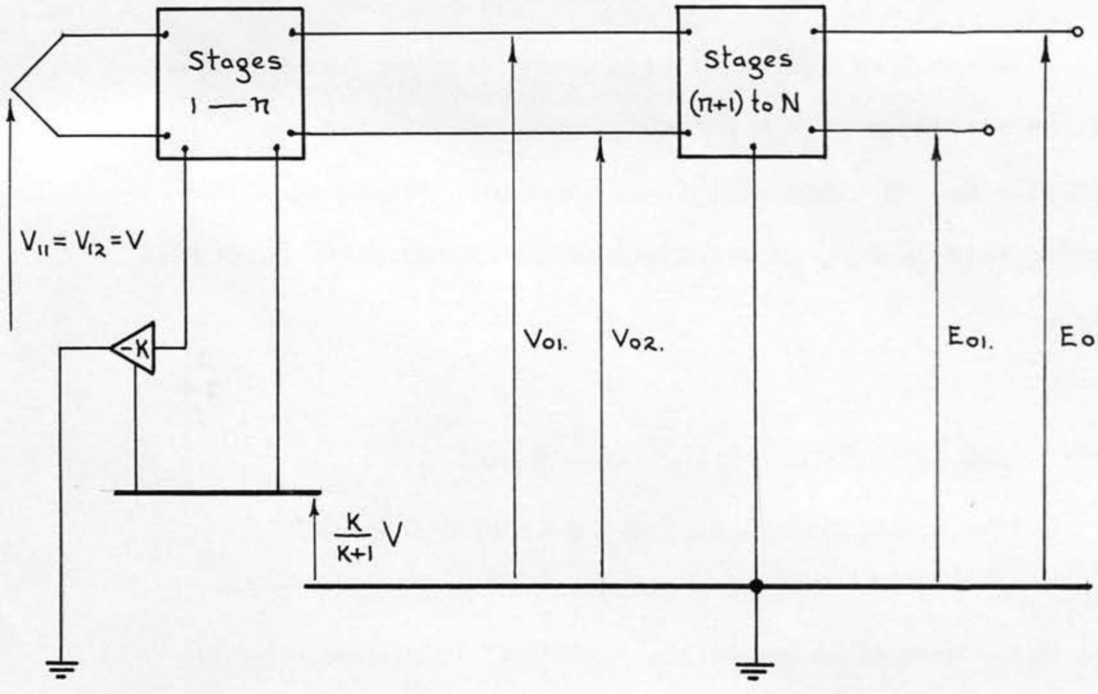

Fig 6.2.1.

As a large part of this unwanted capacitance would normally be composed of the interwinding capacitances of mains transformers used in the apparatus, one way in which it could be reduced would be to miniaturise the complete recording system including the indicating equipment (e.g. Oscilloscope or pen recorder) and power the equipment from batteries. While this would undoubtedly ease the design of the servo amplifier, this improvement might well be at the expense of a considerable increase in the design effort required to develop the rest of the system, so that the overall simplification obtained would be negligible. It is doubtful too whether such a 'packaged' system would find a ready acceptance in other laboratories, since it might well be incompatible with existing apparatus.

Fortunately, a method was discovered whereby the system could be exploited without the necessity of battery supplies and allowing full use to be made of existing conventionally earthed display equipment.

Consider the system shown in Fig. 6.2.1. consisting of a floating amplifier of n stages incorporating a servo amplifier of open loop gain K, followed by a conventional differential amplifier of (N - n) stages, forming a recording amplifier of N stages. If a common mode signal V is applied to the input of the first amplifier, the action of the servo system is to reduce the resulting voltage between the output terminals of this amplifier by a factor of (K + 1).

An apparent disadvantage of the system is that the input to the second part of the amplifier is subjected to a common mode input of $\frac{K}{K+1}$ V, which, if the second amplifier has appreciable common mode sensitivity, may spoil the high rejection of common mode signals which would have been obtained had the whole amplifier of N stages been floating.

A quantitative treatment of the situation given in Appendix VIII shows that the results to be expected from such a hybrid system are by no means as disappointing as might be expected. If $M_{v_{A(p)}}$ is the overall inversion gain transfer function when the whole system is floating, and $M_{v_{B(p)}}$ the corresponding function when a floating-to-grounded conversion is made after n stages as in Fig. 6.2.1., the ratio of the two transfer functions is given by:-

$$\frac{M_{v_{B(p)}}}{M_{v_{A(p)}}} = 1 + \frac{(K+1)\, m_{v_{(n+1)(p)}}}{m_{v_{1(p)}}\left(m_{d_{2(p)}}\, m_{d_{3(p)}} \cdots m_{d_{(n+1)(p)}}\right)} \quad \ldots 6.2.1.$$

where $m_{d_{r(p)}}$ etc. are the individual transfer functions of the rth stage.

By providing sufficient gain in the second and later stages of the floating part of the amplifier, the factor $(m_{d_{2(p)}}\, m_{d_{3(p)}} \cdots m_{d_{(n+1)(p)}})$ can be made so large that the second term of Eqn. 6.2.1. becomes very small in comparison with unity.

Since the success of this modification to the original fully floating system depends on the gain of the amplifier up to the conversion point being large, if a gain control is fitted in the floating part of the amplifier the overall rejection ratio will vary with the gain and may deteriorate excessively at very low gains. Such variation in rejection ratio is of little practical importance since the use of very low gain implies the presence of a large wanted signal so that the signal to artefact ratio would probably be large in any case. At high gains, when artefact rejection is likely to be more important, the hybrid system can be arranged to give an overall rejection ratio within one per cent or less

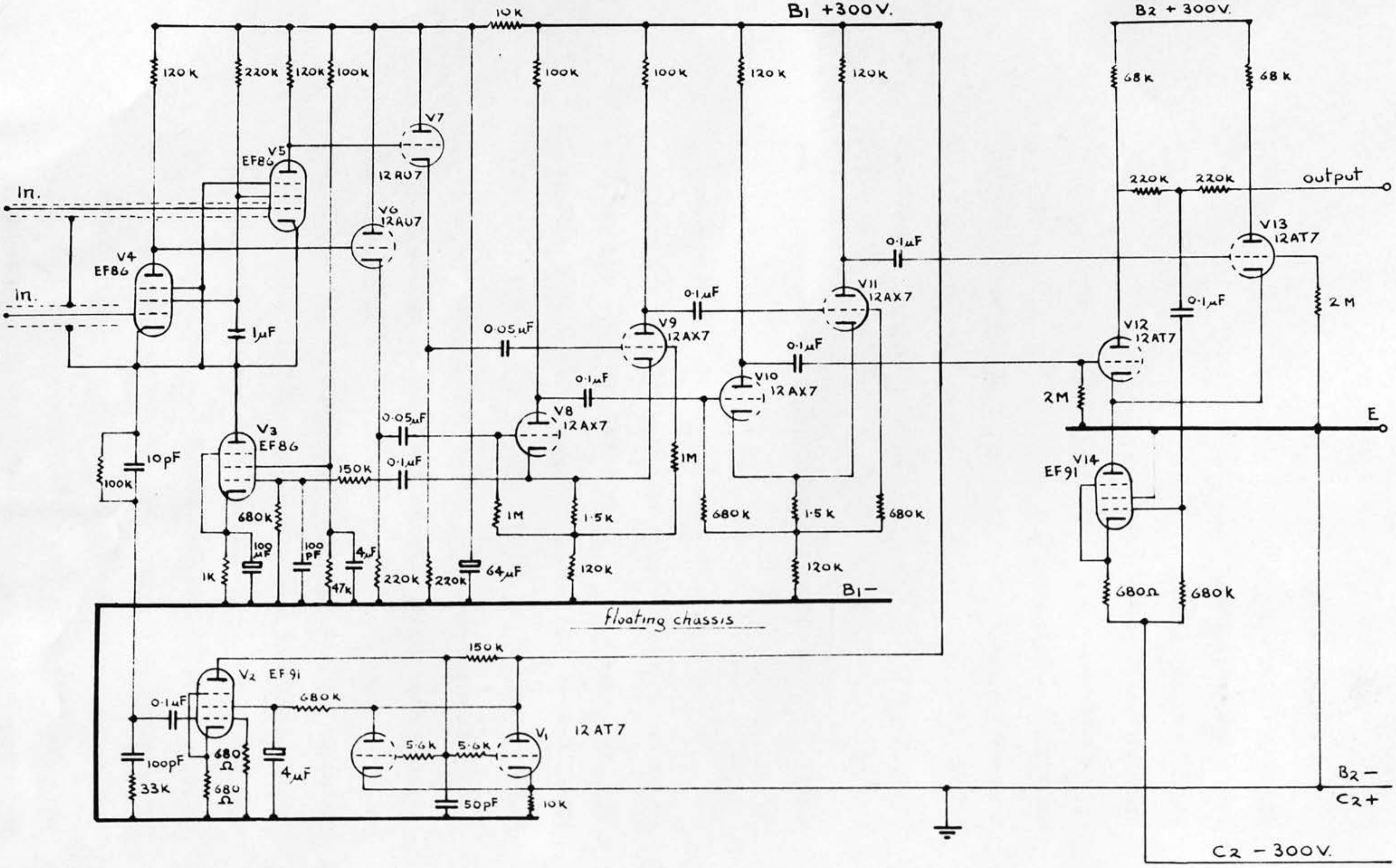
B1 +300V.
10K
120K
220K
120K
100K
100K
100K
120K
120K
B2 + 300V.
68K
68K
V7
12AU7
V5
EF86
In.
V6
12AU7
220K
220K
output
V13
12AT7
0·1μF
V4
EF86
In.
0·1μF
V11
12AX7
2M
0·1μF
1μF
0·05μF
V9
12AX7
0·1μF
V12
12AT7
0·1μF
V10
12AX7
0·1μF
2M
E
0·05μF
V8
12AX7
V3
EF86
10pF
100K
150K
0·1μF
1M
V14
EF91
680K
1M
1·5K
680K
1·5K
680K
100μF
100pF
4μF
1K
47k
220K
220K
64μF
120K
120K
680Ω
680K
B1 –
floating chassis
150K
V2 EF91
0·1μF
680K
V1
12AT7
680 Ω
5·6K
5·6K
100pF
4μF
33K
680 Ω
50pF
10K
B2 –
C2 +
C2 – 300V.

Fig 6.2.2.

of that which would have been attained with a fully floating system.

It was decided, therefore, that the High Rejection Amplifier should consist of a floating pre-amplifier of adequate gain, powered with its servo amplifier from a small floating power unit, the system being completed by a grounded amplifier feeding into conventional display equipment. The circuit of the complete amplifier is shown in Fig. 6.2.2.

A three stage floating amplifier, V_4 to V_{11}, with an auxiliary servo amplifier, V_1 and V_2, feeds a single stage grounded output amplifier, V_{12} to V_{14}. To obtain the highest possible initial rejection ratio, i.e. with the servo loop inoperative, the first L.T.P. stage is based on that described by Richards (1956). The output from the anodes of the first stage L.T.P. (V_4, V_5) is taken through cathode followers V_6, V_7, which minimise the shunt capacitance across the first stage anode loads, to the second L.T.P. stage V_8, V_9. The mean potential of the first stage anodes is then fed back from the cathodes of V_8 and V_9 to the grid of the first stage 'tail' valve V_3. This arrangement enabled amplifier rejection ratios of from 10^4 to 10^5 to be obtained with most pairs of valves used for V_4 and V_5 without the assistance of the servo system. After further amplification by V_{10} and V_{11} the signal is passed to the grounded part of the amplifier.

The common mode rejection of the grounded amplifier does not need to reach the high standard necessary for the first stage of the amplifier, since the gain from the second stage to the output is approximately 10^5 at maximum. Thus with an open loop gain K of 10^2 for the servo amplifier, the common mode rejection of the output stage need be only a tenth of that of the first stage to achieve an overall rejection ratio within 1% of that for a fully floating system.

The servo amplifier uses a single pentode V_2 with a simple cathode follower stage V_1 to feed its output to the capacitive load of some 400 pF presented by the floating amplifier and its power supply.

The amplifier was constructed in a standard ('Lektrokit') metal case on two separate chassis, one for the floating stages, and one for the grounded stage. The floating chassis was insulated from the rest of the structure by polythene spacers. The layout followed the usual rules observed in the construction of high gain amplifiers to ensure stability, freedom from hum, etc., and in addition, particular attention was paid to the provision of adequate screening, (at the potential of the floating chassis), round the early stages of the amplifier. This is necessary to screen the amplifier wiring from nearby earthed objects which are at the full common mode input potential relative to the floating amplifier.

One feature of the screening arrangements is of particular importance, and under many conditions makes possible an improvement of considerably more than (K + 1) times in the overall rejection ratio of the system. This is the connection of the screening of the amplifier input leads, not to the chassis of the floating amplifier as originally proposed, but to the cathode of the first L.T.P. stage.

It is shown in Appendix VI that this connection can result in an important increase in the common mode rejection of the recording system. In theory, the contribution to the common mode response arising from the input network can be reduced by a factor of up to $\frac{1}{1-\beta}$, where β is the gain for

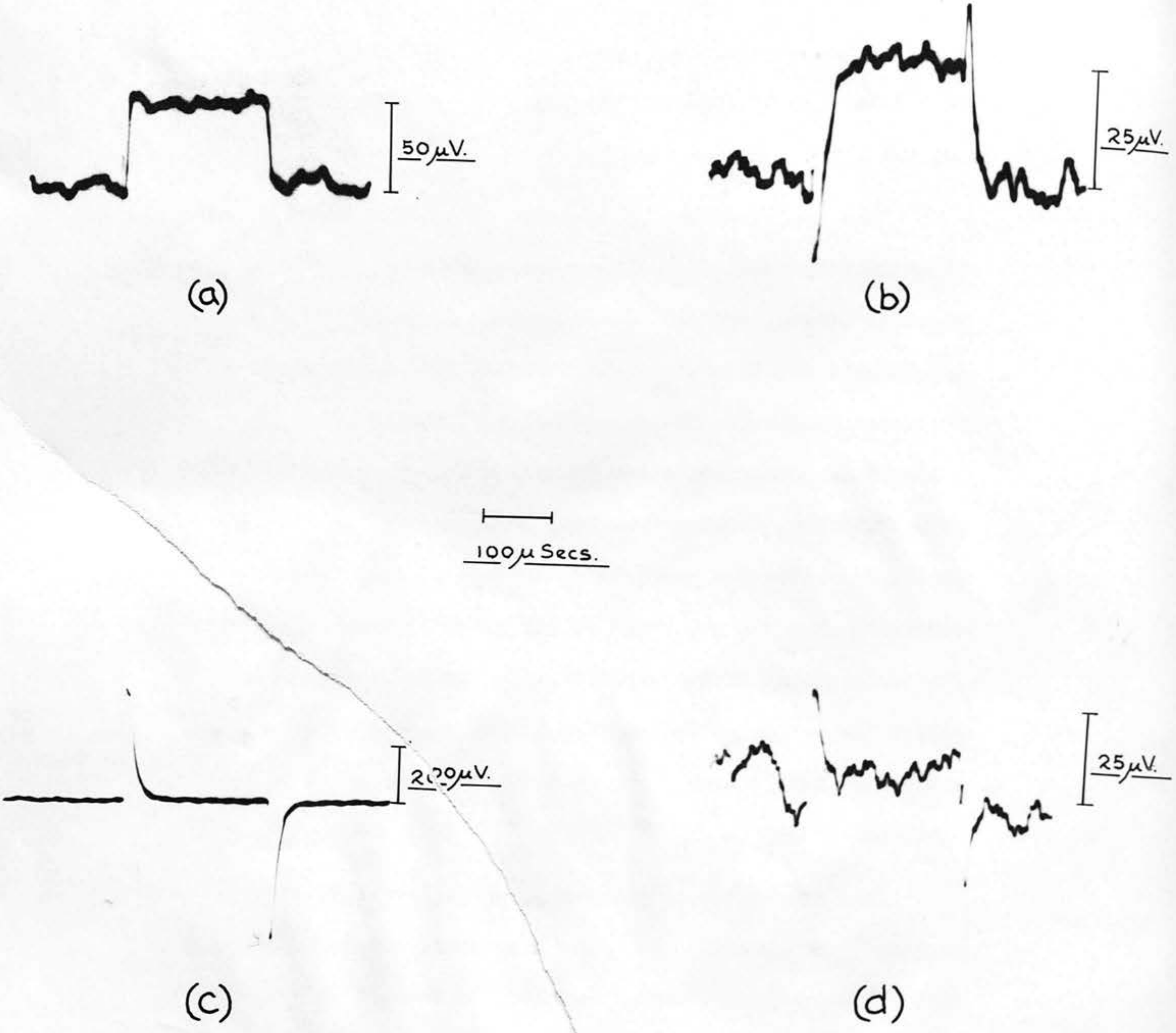

Fig 6.2.3.

common mode signals from the grids to the cathode of the first L.T.P. stage. Such an improvement, of the order of several thousand times for typical values of β, would not be obtained unless the impedances of the recording electrodes were very low, but with normal values for the electrode impedances a reduction of many times in this component would be expected.

The improvement actually observed in practice is limited by the stray capacitance to earth and to the floating chassis resulting from imperfections in the screening of the input leads. Nevertheless, if, as is usually the case, the dominant term in the overall $M_{V(P)}$ of the recording system is that due to the electrode impedance/input impedance network, the overall rejection ratio of the system may be reduced by a factor substantially greater than (K + 1).

The amplifier had an overall maximum gain of 3×10^6 and a maximum output of 200 volts peak to peak. The bandwidth (3db. down) was from 10 c/s to 10 kc/s and the noise level referred to the input terminals was approximately 12 µV peak to peak (1.5 µV R.M.S.).

The performance of the system in rejecting common mode inputs can be gauged from the oscillograms shown in Fig. 6.2.3.

The inherent rejection ratio of the amplifier alone was measured by connecting the two input leads together and applying a pulse having a rise time of 3 µ Sec. between the input leads and earth. Fig. 6.2.3. (a) shows the amplifier output when a 1 volt pulse was injected with the servo amplifier disconnected. The peak output, referred to the input terminals, of 51 µV implies a rejection ratio, using the apparatus as a conventional differential amplifier, of of 2×10^4. Fig. 6.2.3. (b) shows the response obtained with the servo amplifier operating and the input pulse increased to 50 volts.

The reduction of the peak output to the equivalent of 39 µV at the input terminals shows that the amplifier rejection ratio was 1.3×10^6.

The transients at the rising and falling edges of the output pulse were found to be due to excessive rise time in the servo amplifier as they could be reduced to the level of the main body of the output pulse by increasing the open loop high frequency response at the expense of the servo stability margin. When this was done the amplifier rejection ratio was 2×10^6, corresponding to the value expected for a servo loop gain of one hundred. Although it was not found possible to combine this improved rise time with a satisfactory stability margin it was not considered worthwhile to elaborate the servo amplifier to bring this about since a stable rejection ratio of over a million to one was more than enough for the work in hand.

The improvement in the rejection ratio of the recording system as a whole was demonstrated using resistances of 1.0 KΩ and 1.5 KΩ to represent the recording electrode impedances. These resistors were connected to the amplifier through three foot lengths of co-axial cable so that the capacitance between each input lead and its screen was approximately 65 pF. Pulse common mode signals were then applied through the resistors with the input lead screens earthed, and again with the screens connected to the cathode of the first L.T.P. stage.

Fig. 6.2.3. (c) shows the response of the system with the input lead screens earthed when a pulse of 0.1 volts was

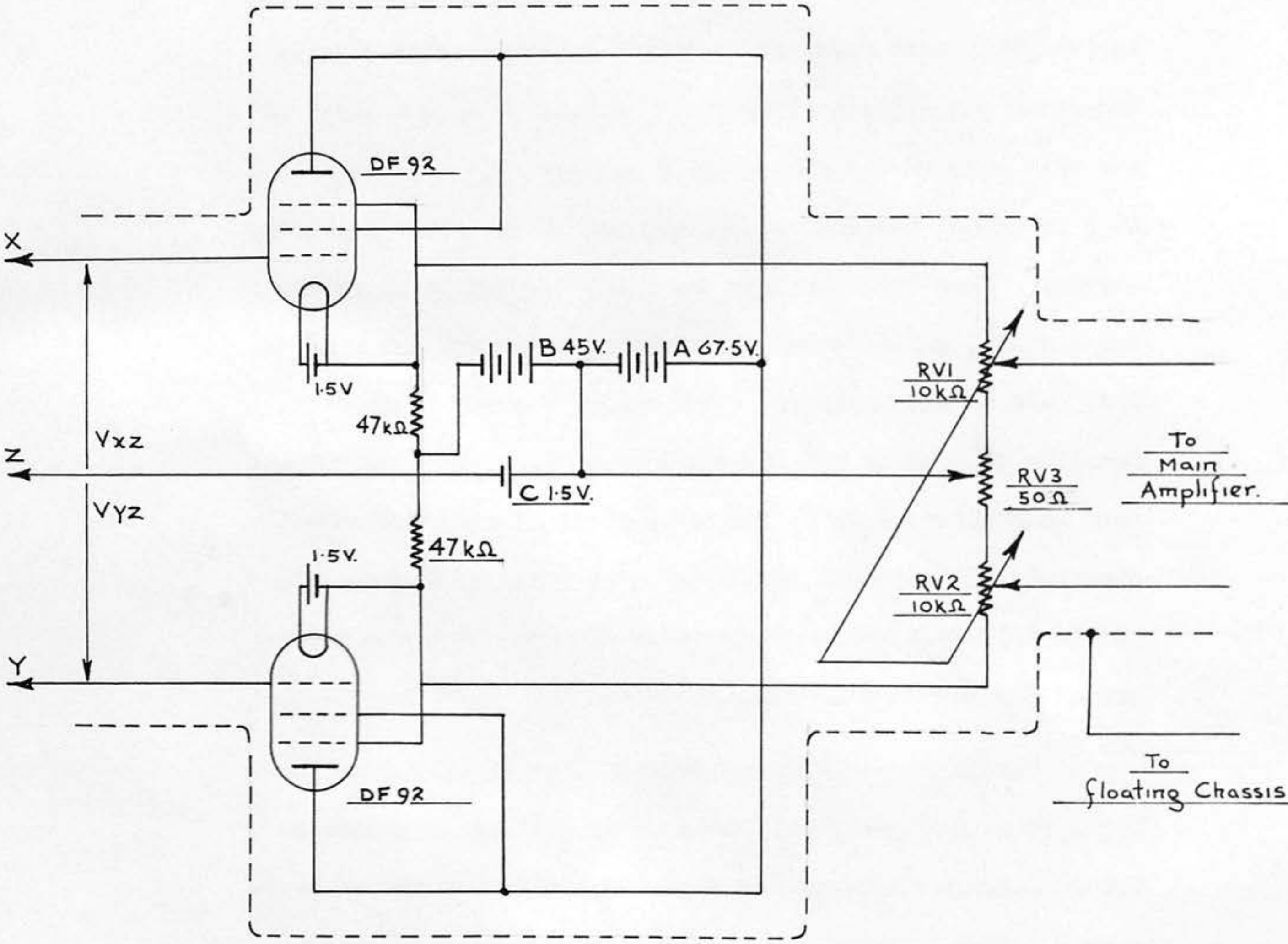
DF 92
X
Vxz
Z
Vyz
Y
1.5V
47kΩ
B 45V.
A 67.5V.
C 1.5V.
1.5V.
47kΩ
DF 92
RV1
10kΩ
RV3
50Ω
RV2
10kΩ
To
Main
Amplifier.
To
floating Chassis

Fig 6.3.1.

applied. The output, corresponding to a differential mode input of 380 μV peak, represents an overall rejection ratio of only 260, illustrating the very poor performance of the system using quite low resistance electrodes, due to the insufficiently high input impedance of the amplifier.

Fig. 6.2.3. (d) shows the improvement in the overall rejection ratio when the input lead screens were connected to the cathode of the first L.T.P. stage. An input of 10 volts then gave an output of only 26 μV peak referred to the input terminals, indicating a rejection ratio of 4×10^5, an increase of some fifteen hundred times over the value obtained with the system of conventional input impedance.

A similar improvement in overall rejection ratio should be obtained using all but the very lowest impedance electrodes (500Ω or less), for which an improvement of only a hundred times would be expected, so that in many cases the recording system described in this section should give an overall rejection ratio approaching or exceeding the 'ideal' ratio of 10^5 recommended in Chapter 5.

6.3. The Differential Attenuator Unit

Fig. 6.3.1. shows the circuit of the Differential Attenuator Unit developed from the basic idea discussed in Chapter 5.

Signals V_{xz} and V_{yz} from recording electrode pairs XZ and YZ are passed through separate cathode followers and applied across ganged potentiometers RV_1 and RV_2. The connections of the potentiometers are arranged so that rotation of their common shaft increases the proportion of V_{xz} fed to the main amplifier while decreasing the contribution from V_{yz}. The signal applied to the main amplifier is thus of the required form ($V_{xz} - V_{yz}$).

To minimise the distortion of the waveforms of V_{xz} and V_{yz} caused by voltage drop in the recording electrode impedances, the input impedances between X and Z and between Y and Z should be as high as possible. At the same time, to obtain the maximum rejection of signals common to all three recording electrodes, the impedance between the main amplifier input terminals and the preparation should be as low as possible, and the shunt impedances from the amplifier input leads to earth as large as possible.

The design of the floating cathode follower stages attempts to satisfy these three requirements.

To minimise the capacitance to earth associated with the power supplies for the cathode followers the circuit was designed around small directly heated battery valves so that the power required by the unit could be supplied from relatively small dry batteries which are contained within the case housing the instrument.

The battery voltages and circuit resistances were chosen to operate the valves under conditions giving minimum grid current (1.5×10^{-10}A) and maximum input resistance. When the cathode follower valves were mounted close to the preparation so that grid leads of only an inch or so in length could be used, the input impedances between XZ and YZ were effectively determined by the input capacitances of the cathode followers (one or two pF.).

Under the operating conditions chosen the output impedances of the cathode followers were approximately 1 KΩ so that the maximum impedance between each main amplifier input and the preparation is just over 5 KΩ, occurring when the sliders of RV_1 and RV_2 are at their mid position.

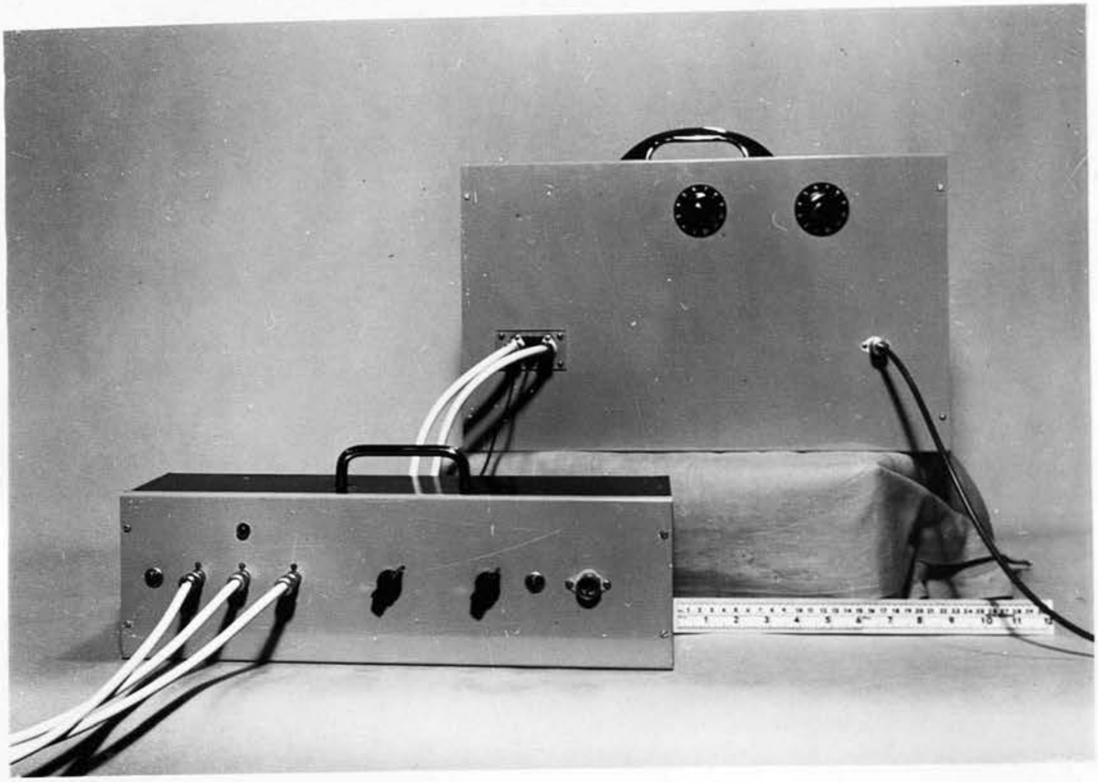

Fig. 6.3.2.

The Recording System.

To avoid the necessity of balancing the time constants which would be introduced by resistance capacitance coupling of the two cathode followers to the potentiometers RV_1 and RV_2, direct coupling is used throughout the circuit. This makes it inevitable that some D.C. potential must appear across the input to the main amplifier. If excessive this potential may overload the first amplifier stage so that the signal being carried might be seriously distorted or even lost entirely if the first stage is driven to cut-off by the D.C. component at its input. Another disadvantage of direct coupling is that the D.C. potential applied to the main amplifier is dependent on the setting of the Differential Attenuator, so that alteration of this setting will produce changes of potential at the amplifier input which will be transmitted through the amplifier, and may easily be large enough to cause 'blocking' of the later stages. These difficulties are largely avoided by the use of the bias battery C the voltage of which is chosen to ensure that the D.C. potential across RV_1 and RV_2 is never more than a few tenths of a volt. This protects the main amplifier first stage from overload and minimises the disturbance produced by operation of the Differential Attenuator control.

The circuit was constructed in a small metal case, separate from the main amplifier, for use as an add-on unit in cases where the Differential Direct component of the stimulus artefact was significant. Fig. 6.3.2. shows a later model in which the cathode follower valves were mounted inside the case of the unit rather than used as probes, connection to the preparation being made by short lengths of low capacitance cable. The case of the unit and screening of its cables was connected to the floating chassis of the main amplifier. This mechanically more convenient arrangement was adopted since it was found that although the input capacitances of the unit were raised to some 20 pF due to the input cables, this did not limit the performance of the system when recording from actual tissues.

The measured response of the system when a step function signal was injected simultaneously into all three inputs of the Differential Attenuator was found to correspond to a rejection ratio of from 2×10^5 to 4×10^5, depending on the setting of the coarse control, RV_1/RV_2, of the unit.

When the input lead Z was earthed and a common mode step function input applied to leads X and Y, the coarse and fine controls RV_1/RV_2 and RV_3 could readily be adjusted to reduce the recording system output to a level corresponding to a rejection ratio of over 10^4.

The performance of the system in rejecting signals in the more general case when V_{xz} is not equal to V_{yz} was investigated using a saline bath as a purely resistive 'preparation'.

An evaporating dish was filled with 0.9% NaCl solution to present a liquid surface of about 7 cm. diameter. Dipping into the saline at various points were six electrodes usually of steel or silver wire for use as stimulating, X, Y and Z recording and earth electrodes. Current pulses of 1 mA having durations of around 1 m Sec. and rise time constants of a microsecond were injected into the saline from the low capacitance constant current stimulator, and the Differential Attenuator adjusted for minimum artefact with each arrangement of the electrodes.

The results at first obtained were inconsistent and somewhat puzzling. It was observed that the waveform of the direct artefact component occasionally differed considerably from that of the stimulating current pulses and varied with the positions of the electrodes, especially when electrodes were separated by distances comparable with their dimensions. It was apparent that the waveforms of the signals appearing across the two potentiometers of the Differential Attenuator were often dissimilar since with the instrument adjusted for minimum artefact, an unexpectedly large residual signal was obtained in the form of a pair of transients the 'time constants' of which suggested a polarization effect.

That the waveform distortion was not due to the polarization impedance of the stimulating electrodes was confirmed by monitoring the waveform of the voltage dropped across a small sampling resistor in series with the stimulating electrodes. The stimulating current and thus the stimulus field in the resistive 'preparation', was found to be of the correct waveform, as expected in view of the very high stimulator output impedance. Another experiment in which a common mode step input was applied to leads X and Y through the recording electrodes in a saline bath established that the waveform of the recorded voltage was virtually unaffected by the impedances of the electrodes used due to the much higher input impedances of the cathode followers.

Eventually it was found that the phenomenon could be shown to be due to the disturbing effect of the electrodes themselves on the distribution of the field in the preparation. Any object of conductivity different from that of the saline when placed in the bath will alter the field distribution in its vicinity. If the disturbing object is polarizable its effect on the surrounding field will vary with time as the conductivity of the body changes due to the polarization of its surface by the current passing through it. The waveform

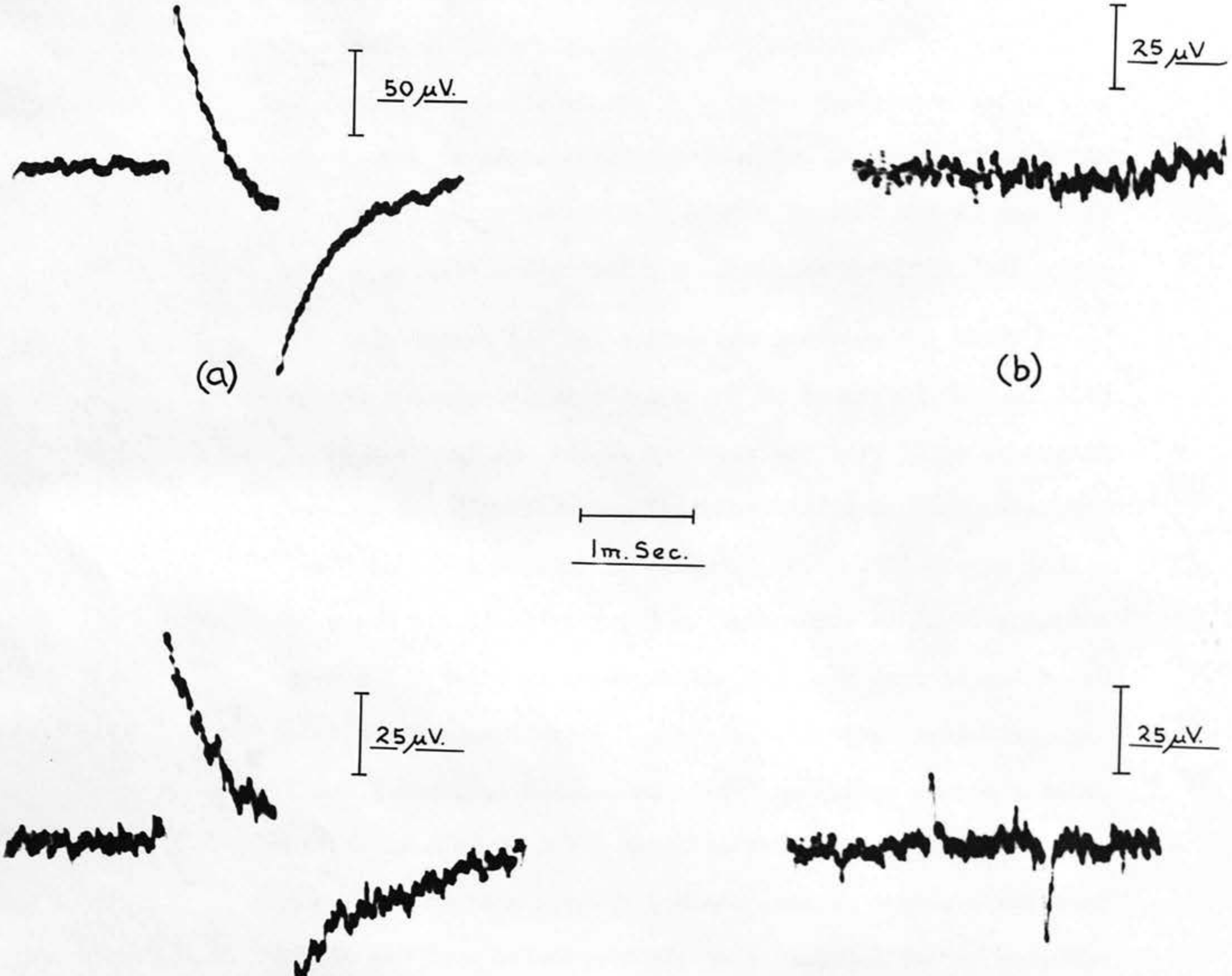

Fig. 6.3.3.

of the potential recorded from the saline in the region of the polarizable body will thus differ from that of the stimulating current. It was shown that the presence of any polarizable materials in the 'preparation', whether in the form of electrodes, or as isolated objects placed in the neighbourhood of the electrodes, could give rise to distortion of the recorded waveform with consequent anomalous behaviour of the Differential Attenuator.

To demonstrate this effect, and to obtain consistent results from the apparatus, it was necessary to construct special electrodes so that all polarizable materials were excluded from the 'preparation'. The electrodes were formed from silver/silver chloride wires sealed into one end of glass tubes approximately 6 cm. long filled with saline solution. The other ends of the tubes were open and dipped under the surface of the saline in the bath.

Fig. 6.3.3. illustrates some of the results obtained. A stimulus pulse of 0.8 mA and 1 m Sec. duration was injected into the bath using two of the glass tube electrodes described separated by a distance of 2 cm. Figs 6.3.3. (a) shows the residual artefact cancelled as far as possible with the Differential Attenuator when the X and Y electrodes were of clean silver some 2 cm. apart and 3 cm. from the stimulating electrodes. Fig. 6.3.3. (b) shows the marked improvement in rejection obtained under identical conditions except that glass tube electrodes were used for X and Y. The response to the field which was producing a potential difference of 5 mV between recording electrodes X and Y, and a common mode potential of some 80 mV between them and earth and the Z electrode, was below the noise level of the system.

The effect of placing an isolated silver recording electrode, a body of about 1 ml. in volume, at a distance of 1 cm. from one of the recording electrodes is shown in Fig. 6.3.3. (c), while the disturbance produced by a much smaller object is illustrated in Fig. 6.3.3. (d). Here a noticeable deterioration in the maximum performance of the system was produced by placing a 3 mm. length of No. 30 S.W.G. silver wire at a distance of one or two mm. from one recording electrode.

It was evident from results like these, obtained using a purely resistive 'preparation', that the Differential Attenuator Unit was capable of effecting a reduction of a thousand times or more in the amplitude of the Differential Direct component of the artefact. It was also clear that to achieve this level of performance a very high degree of 'resistivity' was required of the medium in which the recording was being made.

Since it seemed most probable that under the ordinary circumstances of recording from the nervous system the tissues would fall short of this requirement, and in so doing set a limit to the rejection attainable, the performance of the Differential Attenuator Unit was judged to be entirely adequate for all practical purposes.

Chapter Seven

Performance of the Anti-Artefact System

The experiments described in this chapter were designed to demonstrate the effectiveness of the various parts of the anti-artefact system in dealing with the individual artefact components, and of the complete system in rejecting a general artefact, while recording from live tissue preparations with practical electrodes.

Adult guinea pigs were anaesthetised with Urethane and the electrodes applied to exposed muscles of the neck and hind legs and to the cerebral cortex. Although recording of action potentials from the tissue was seldom required, to minimise the disturbance of the physical properties of the tissue every care was taken to avoid interference with the tissue blood supply and to prevent drying out of the exposed surfaces.

The oscillograms reproduced on the following pages illustrate the reduction in Common Direct and Common Escape artefact components obtained using the High Rejection Amplifier, in the Common and Differential Escape components using the Low Capacitance Stimulator, and in the whole artefact when the complete anti-artefact system was employed.

7.1. Reduction of Common Mode Artefact Components

The effectiveness of the high rejection ratio recording amplifier in reducing the Common Direct artefact

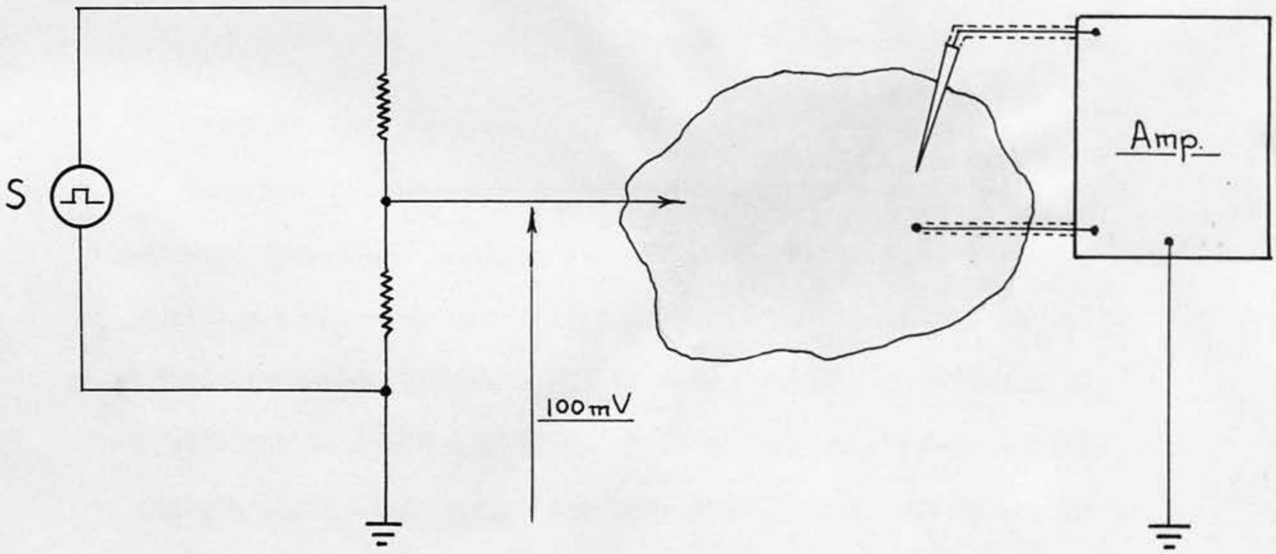

Fig. 7. 1. 1.

component was investigated using the arrangement shown in Fig. 7.1.1.

The preparation was isolated from earth and a 100 mV, 200 µ Sec. pulse injected into the tissue through a low impedance electrode (an uninsulated hypodermic needle inserted into muscle) from an attenuator across the output of the stimulator S.

The recording electrodes used were of markedly differing impedance, one being an electrolytically thinned steel needle enamelled to leave only a 15 µ tip exposed, and having an impedance of around 100 KΩ, the other being a silver/silver chloride ball electrode of approximately 1 mm diameter, having an impedance in the region of 300Ω. The silver ball electrode rested on the surface of the exposed muscle while the needle electrode was inserted some one or two millimetres under the muscle surface.

Each electrode was connected to the amplifier by three feet of low capacitance co-axial cable (17 pF/ft.) the screening of which could be connected either to earth or to the cathode of the first L.T.P. stage in the floating amplifier. The 100 mV stimulus pulse waveform set up between the preparation and earth and appearing as a common mode signal at the recording electrodes gave rise to the large Common Direct artefact seen in the top trace of Fig. 7.1.2. (a). The common mode signal at the amplifier input is also shown on the lower traces of the oscillograms in this figure.

The artefact amplitude of 10 mV peak to peak corresponds to an overall rejection ratio of only twenty to one - a direct result of the use of such dissimilar recording electrodes with an amplifier having a capacitance to earth of some 50 pF from each input terminal. The disturbing

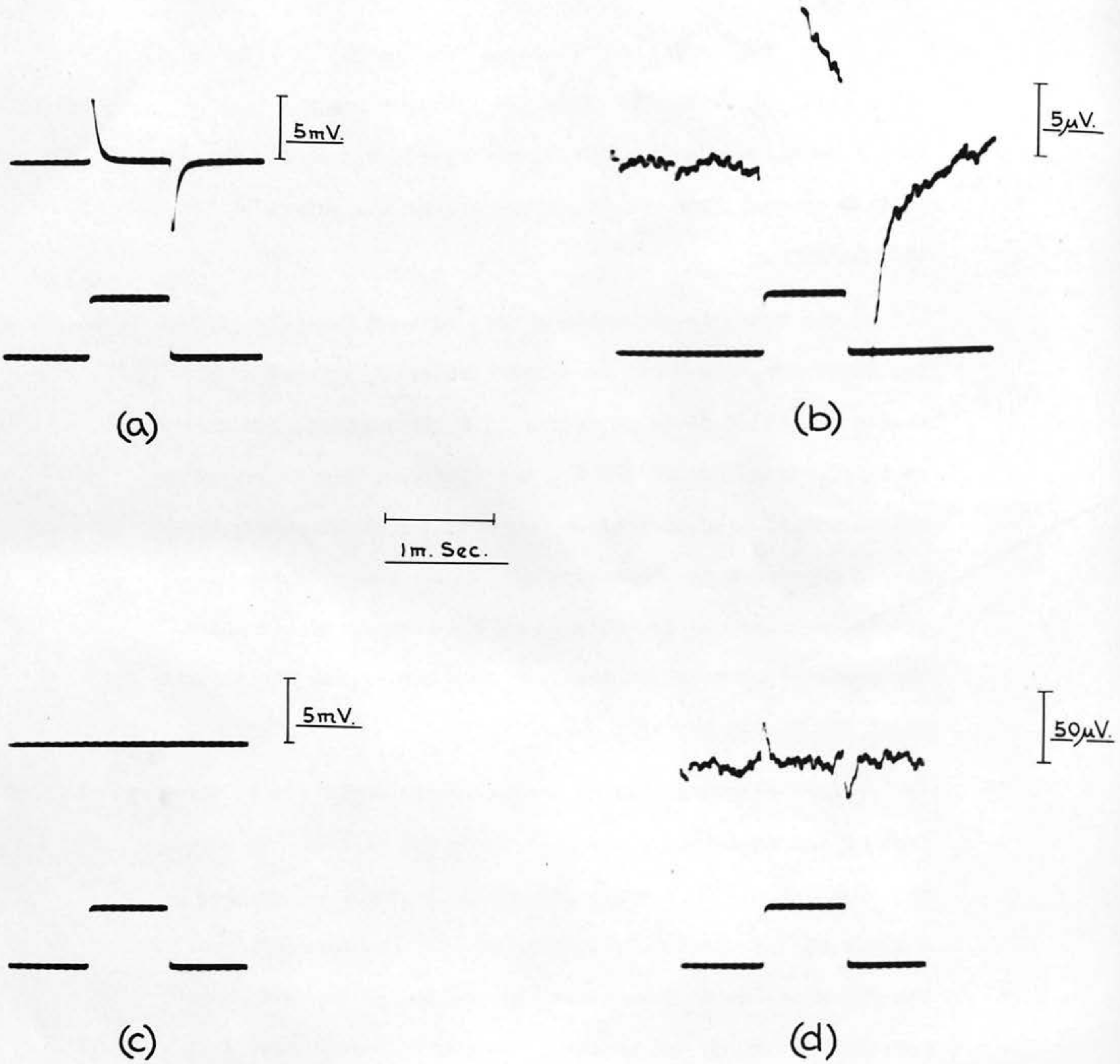

Fig. 7.1.2.

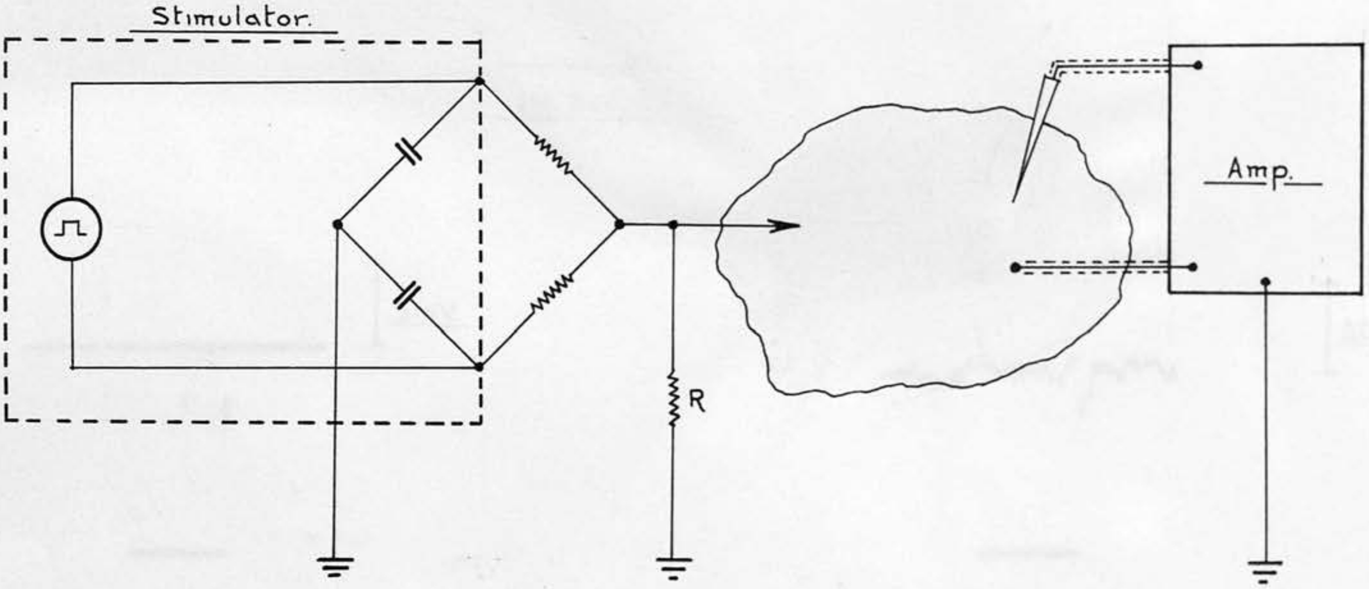

Fig. 7. 1.3.

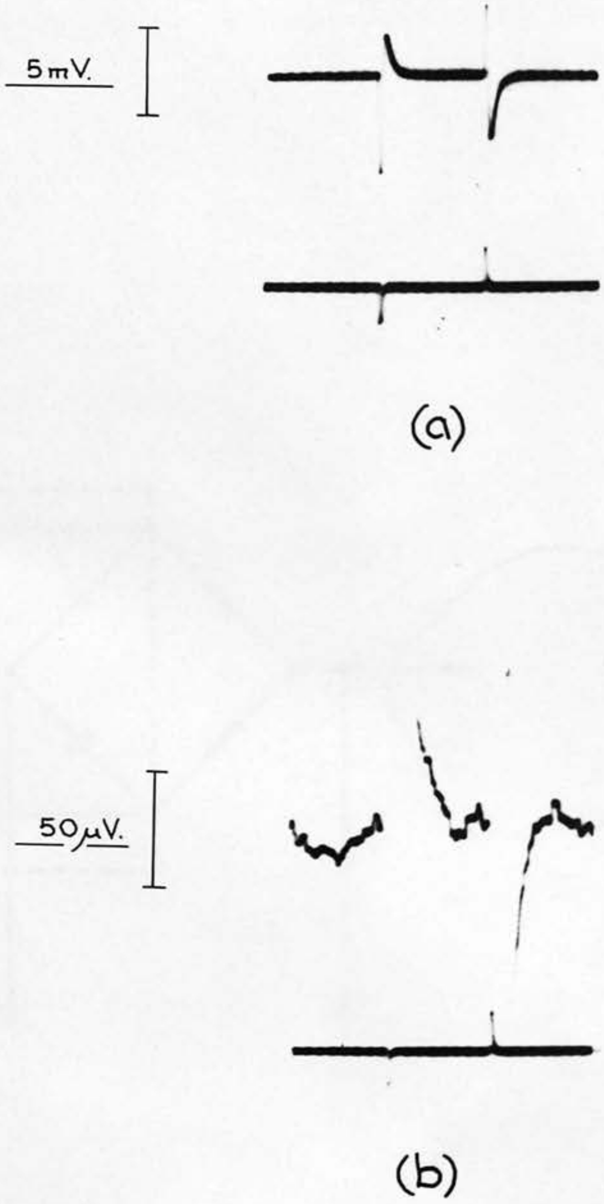

Fig 7.1.4.

effect of the same artefact at higher amplifier gains may be judged from the oscillogram of Fig. 7.1.2. (b).

Figs. 7.1.2. (c) and (d) show the very substantial reduction in amplitude of the artefact resulting from the connection of the input lead screens to the cathode of the first L.T.P. stage converting the recording system from a conventional one to the high rejection ratio system proposed in the present work. The artefact, not visible in Fig. 7.1.2. (c), taken at the same gain as was used in (a), can be seen in Fig. 7.1.2. (d) for which the gain was increased to that used in (b). The amplitude of the artefact, referred to the amplifier input terminals was 49 µV peak to peak indicating an increase in overall rejection ratio of just over two hundred times.

To simulate conditions under which the only significant artefact component is the Common Escape component, the experimental set up was changed to that shown in Fig. 7.1.3. The stimulator was allowed to float with its outer screens connected to earth. Resistors, representing the stimulating electrode impedances, were connected in each stimulator lead, the junction of the two resistors being connected to earth through a third resistor R. A stimulator output was chosen so that the escape current flowing to earth through R developed transient voltages of 100 mV peak to peak which were applied as a common mode potential to the preparation as before. The lower traces of the oscillograms of Fig. 7.1.4. show the waveform of the common mode signal appearing at the amplifier input terminals as monitored between the floating amplifier chassis and earth.

Fig. 7.1.4. (a) shows the amplifier output at low gain when this signal was injected with the amplifier input

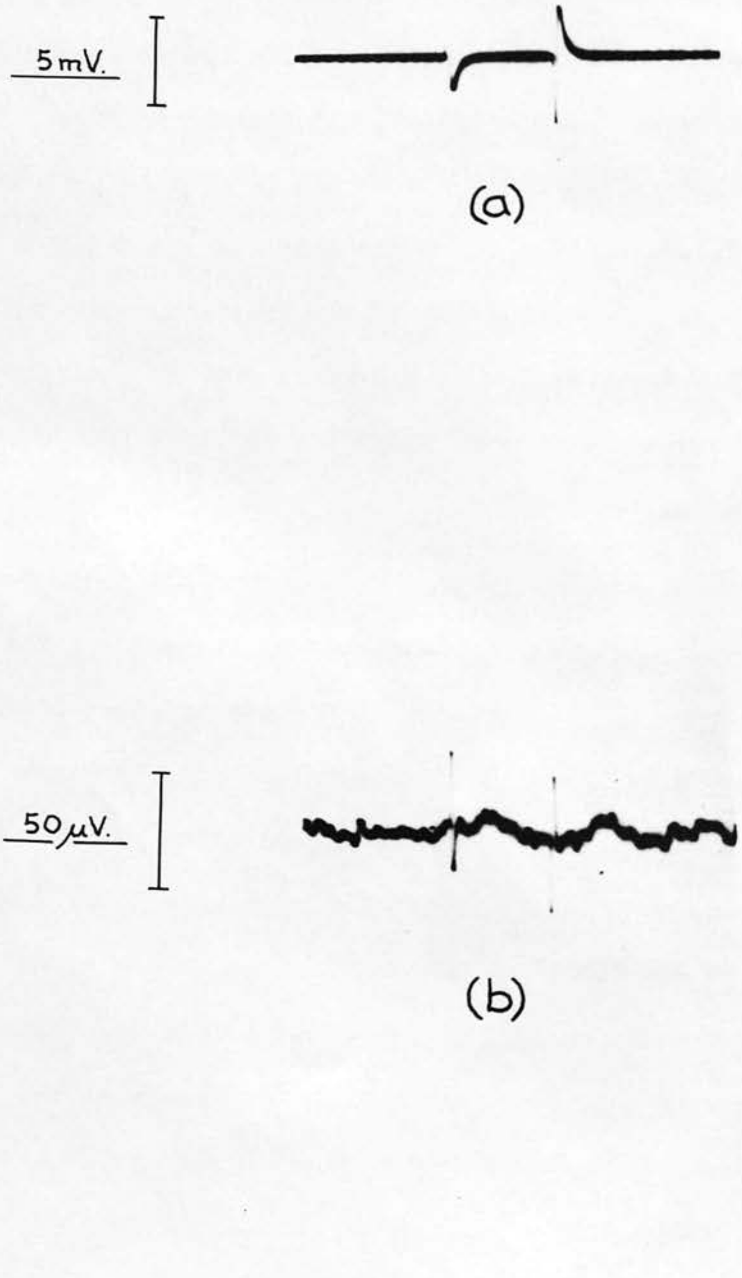

Fig 7.2.1.

lead screens earthed. Again an output corresponding to a differential input of 10 mV peak to peak was obtained, sufficient to produce severe distortion of the oscilloscope trace at the higher gain used in Fig. 7.1.4. (b).

Restoring the high rejection properties of the recording system by driving the amplifier input lead screens, reduced the artefact amplitude to 67 µV peak to peak, demonstrating an improvement in the rejection of this Common Escape artefact by a factor of approximately a hundred and fifty times.

7.2. Reduction of Escape Artefact Components

The alternative approach to the control of the Common Escape artefact using the Low Capacitance Stimulator was demonstrated using the same arrangements (Fig. 7.1.3.).

In this case the screening of the amplifier input leads was earthed, so destroying the high common mode rejection of the recording system. The amplifier output obtained when the stimulator outer screening was earthed, was then compared with that when the stimulator screens were driven by the auxiliary cathode followers to put the stimulator into its 'Low Capacitance' condition.

Fig. 7.2.1. (a) shows the recording system response with the stimulator operating conventionally with earthed screening. Once more the output corresponded to a differential input of 10 mV peak to peak.

Switching on the auxiliary cathode followers to drive the stimulator screens so invoking the low capacitance properties of the instrument, reduced the recording system output to that which would have been produced by a differential

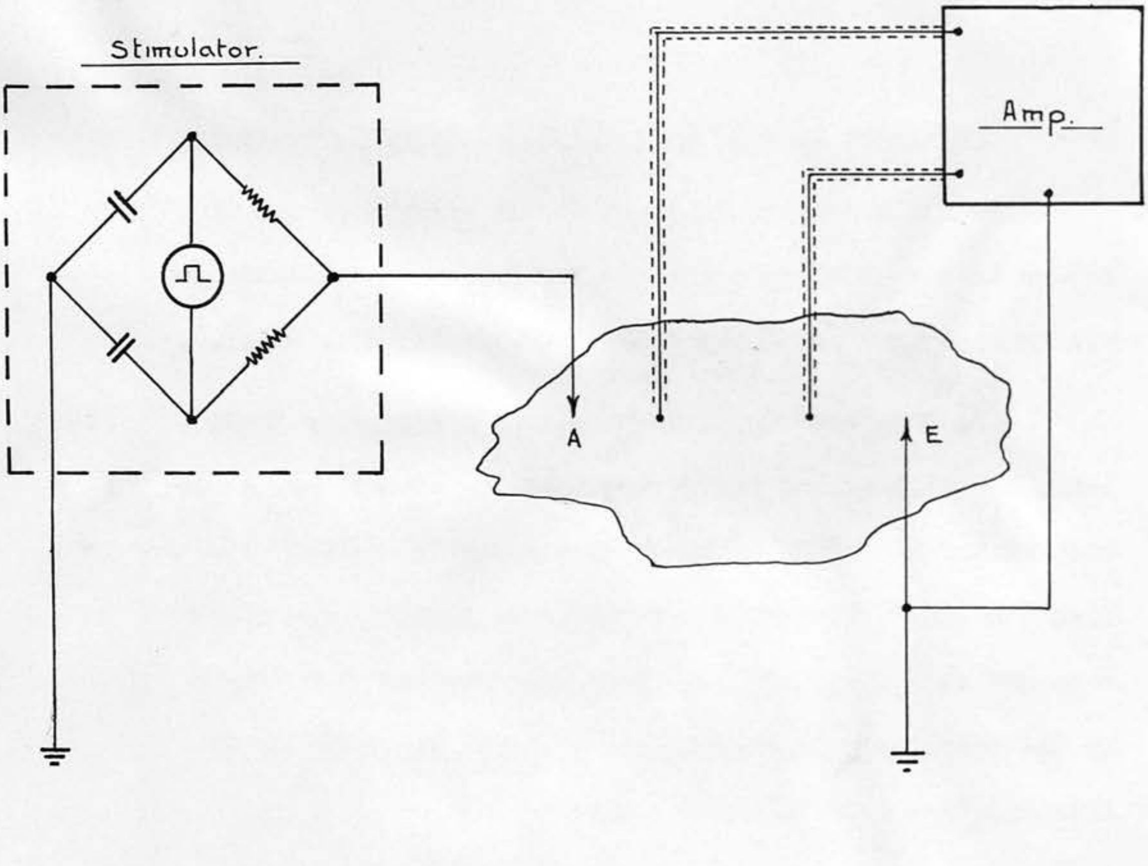

Fig 7. 2.2.

input of only 72 µV peak to peak (Fig. 7.2.1. (b)), thereby reducing the Common Escape artefact by a factor of a hundred and forty times.

The circuit shown in Fig. 7.2.2. was used to demonstrate the reduction of a virtually pure Differential Escape artefact by the Low Capacitance Stimulator.

As before the floating stimulator output was passed through two resistors representing the stimulating electrode impedances. The junction of these resistances was connected to the preparation at A so that the stimulus escape currents flowed through the tissues to a large earth electrode E, situated some 15 cm. from A. Low impedance silver/silver chloride electrodes were placed on the surface of an exposed muscle between A and E, and on a line joining these injection electrodes.

The electrode arrangement thus favoured the recording of a Differential Escape component, while the use of large, low impedance earth and recording electrodes tended to minimise the Common Escape component.

With the stimulator screening earthed, the escape current transients, as monitored using a sampling resistor in the earth lead, were adjusted to 100 µA peak to peak. This escape current resulted in the artefact output of 6 mV peak to peak shown in Fig. 7.2.3. (a) when the recording amplifier input lead screens were earthed giving minimum rejection of common mode signals.

The input lead screens were then connected to the first L.T.P. stage cathode thereby vastly increasing the common mode rejection of the recording system. That the output was unaltered by this manoeuvre, (Fig. 7.2.3. (b)),

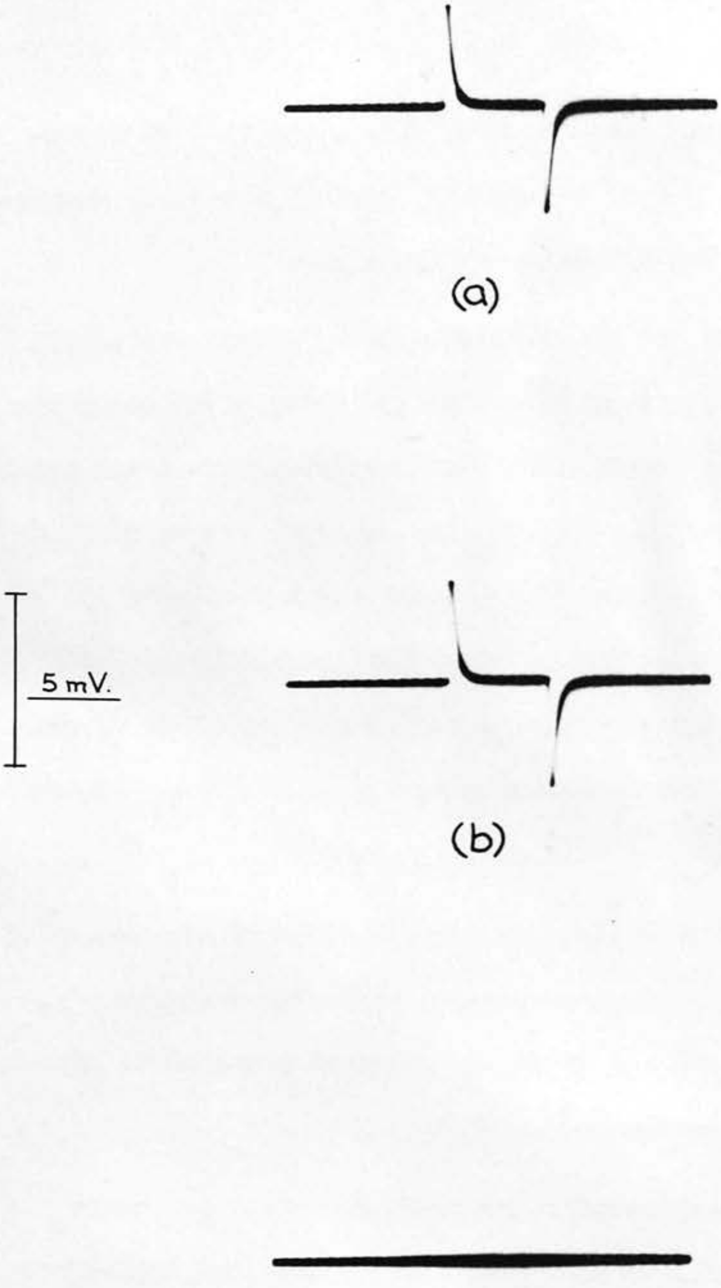

(a)

(b)

(c)

Fig. 7.2.3.

confirmed the insignificance of the Common Escape artefact component compared with the Differential Escape component.

When the outer screens of the stimulator were then driven to reduce the stimulator capacitance to earth, the artefact was no longer visible in the output of the amplifier (Fig. 7.2.3. (c)). Increasing the amplifier gain showed that the amplitude of the artefact had in fact been reduced to 49 μV peak to peak.

7.3. Reduction of a General Artefact

A simple stimulating and recording experiment was set up to illustrate the usefulness of the complete anti-artefact system in a situation where all four artefact components would be encountered.

Silver/silver chloride ball electrodes were used to stimulate and record from the surface of an exposed muscle using the Low Capacitance Stimulator, the High Rejection Amplifier, and the Differential Attenuator.

The separation of both stimulating and X/Y recording pairs of electrodes were approximately 5 mm, the distance between the nearest stimulating and recording electrodes being 7 mm. The Z reference electrode was some 10 mm. on the far side of the recording electrodes from the stimulus site, and the earth electrode - a large hypodermic needle - was inserted into muscle several centimetres from the recording electrodes.

The wide spacing of both stimulating and recording electrode pairs, in comparison with the distance between stimulating and recording sites, was deliberately chosen to provoke a large Differential Direct artefact component to

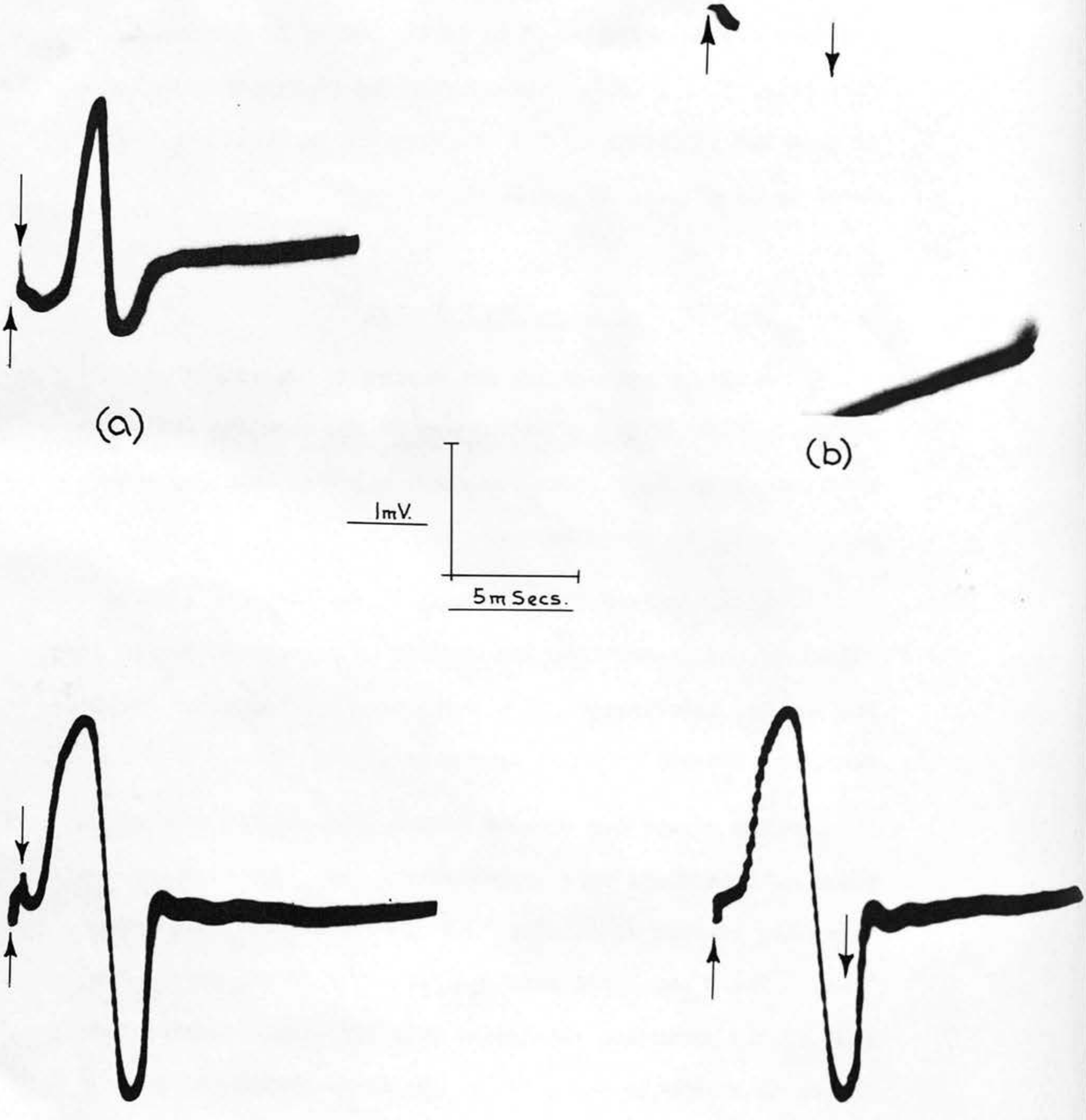

Fig 7.3.1.

demonstrate the use of the Differential Attenuator Unit.

Fig. 7.3.1. (a) shows the record obtained when a 0.6 mA, 500 µ Sec. stimulus pulse was applied and the Differential Attenuator control was set at its mid position so that the recording system was equivalent to a floating differential amplifier working between recording electrodes X and Y. A similar result would have been obtained had the Differential Attenuator not been in use and the X and Y recording electrodes been connected directly to the main amplifier.

The stimulus pulse, marked at its start and finish by the small arrows, produced a large Differential Direct artefact component which badly overloaded the amplifier so that the action potential following, and occurring during the amplified recovery, was grossly distorted.

When the stimulus pulse duration was increased to 5 m Sec., the overloading of the recording system was so severe that the trace was driven almost completely off the oscilloscope screen during the entire period from the start of the stimulus pulse until after the end of the response (Fig. 7.3.1. (b)).

The experiment was then repeated with the Differential Attenuator Unit adjusted for minimum artefact yielding the results shown in Figs. 7.3.1. (c) and (d). The record of Fig. 7.3.1. (c), obtained using a 500 µ Sec. stimulus as in (a), shows small residual artefacts at the start and finish of the stimulus pulse resulting from incomplete cancellation of the Differential Direct component due to tissue polarization effects. These, however, act as convenient stimulus markers, and could not be said to interfere seriously with the recorded response.

When the 5 m Sec. stimulus pulse was used a virtually undistorted response was actually recorded during the stimulus as shown in Fig. 7.3.1. (d).

The measured reduction in Differential Direct component obtained was from 6.3 mV in records (a) and (b), to transients 0.15 mV in amplitude in records (c) and (d). Although this represents a reduction of only forty to one which is much less than could be achieved by the Differential Attenuator, given a resistive medium, this ratio gives little impression of the marked improvement in recording which was in fact obtained due to the difference in waveform of the artefacts before and after cancellation.

The results of these experiments using real tissue preparations showed the performance of the anti-artefact system in rejecting actual artefacts to be consistent with expectations based on the properties of the apparatus as reported in Chapter Six. The reduction in capacitance to earth of the stimulator circuit, and increase in the Rejection ratio of the recording system, should result in a reduction of at least a hundred to one in the amplitude of the Common and Differential Escape components and in the Common Direct component. In fact just such a reduction was observed. Similar trials of the stimulator and recording amplifier on brain tissue, and using surface electrodes on the skin of human limbs, gave equally satisfactory results. In no case was a reduction of these artefact components by a factor of less than a hundred to one observed.

The less spectacular improvement in the Differential Direct artefact component obtained in the experiment described here, and in similar experiments on other tissues, was also to be expected in view of the sensitivity of the system to the presence of polarizable structures near the electrodes demonstrated in Chapter Six.

Chapter Eight

Conclusions.

A theory of the mechanism of the production of stimulus artefact in three dimensional preparations has been advanced, in which the artefact is regarded as being composed of four major components.

That it has been possible to demonstrate these four components separately, and to reduce a large artefact to below the system noise level using methods based on the theory, would support the view that these four components represent the only ones of practical significance.

The theory is quantitative in that, if values are assigned to the various transfer functions involved, the amplitude and waveform of the artefact produced in a given system is predictable. It has been found that where the transfer functions involve the electrode impedances, in many cases a sufficiently close approximation to the true transfer function can be obtained by regarding the electrode impedance as either a pure resistance, or a shunt combination of resistance and capacitance. Values of resistance and capacitance corresponding to the various electrodes used in this laboratory have been indicated, and it has been shown that these can be used to evaluate the overall transfer functions of the recording system and stimulating circuit.

A knowledge of the transfer impedances associated with the preparation completes the information required to estimate the amplitude and waveform of the artefact to be expected in a given situation. The lower limit of one of these transfer impedances, ($C_{e_{(p)}}$), is set by the earth electrode impedance, but the other three can assume any value, including zero, over a very wide range. Since the other transfer functions, associated with the electrode networks, and the stimulating and recording apparatus, can also vary within very wide limits, the resultant artefact, being a function of all these variables, can assume an enormous variety of amplitudes and waveforms.

It is because the artefact is a function of so many variables, most of which can effect a change of several orders of magnitude in one or more of the artefact components, that the importance of viewing the stimulating/preparation/recording system as a whole, when considering stimulus artefact, can hardly be overstressed.

The usefulness of a quantitative theory of stimulus artefact becomes apparent when an attempt is made to reduce the artefact arising in a practical situation. Thus a proper appreciation of the mechanism of artefact production should enable the various components present to be recognised, and make it possible to diagnose which parts of the system are responsible. Steps can then be taken to improve the performance of the relevant parts of the system using the techniques and apparatus described here and elsewhere.

Consideration of possible methods of reducing stimulus artefact in general has shown that three out of the four major components could be reduced indefinitely by sufficient improvement in the isolation of the stimulator, and in the common mode rejection of the recording system.

Thus it has been argued that the best way in which the 'Escape' components of the artefact can be controlled is to reduce to a minimum the capacitance to earth of the stimulator circuit. The disadvantages of the conventional, passive way of fulfilling this requirement, using a radio frequency isolating unit, can be overcome by the active system using the Low Capacitance Stimulator described.

It has been shown possible to construct such an instrument having substantially less capacitance to earth than the best R.F. units published, yet retaining all the advantages of a conventional earthed stimulator, exemplified in this case by the provision of constant current output pulses of up to 20 mA.

Measurements of the maximum value of the escape component likely to be observed when using a conventional stimulator, were used to assess the required capacitance to earth of an 'ideal' stimulator giving escape artefacts below the recording system noise level in all circumstances. This ideal capacitance was estimated to be approximately one pF. - the value chosen as the design target in the development of the Low Capacitance Stimulator. The conclusion that this value represents the limit to which the capacitance to earth of a stimulator may be usefully reduced, is supported by the complete absence of escape artefact components always observed when the stimulator was used under normal stimulating conditions, i.e. not specially arranged to demonstrate escape components.

Nevertheless, the stimulator described here is not presented as a fully engineered equipment, but rather as an experimental apparatus, constructed to demonstrate the feasibility of the active technique which it embodies. There would therefore seem to be no reason why advantage should not be taken of the possibility of further reduction in stimulator capacitance, should this be considered desirable, by using a miniature, transistorised construction, and more sophisticated servo amplifiers in place of the auxiliary cathode followers. In this way a standard of stimulus isolation might be attained which would be quite unapproachable by any passive technique.

Similar remarks as to the experimental nature of the High Rejection Ratio recording amplifier described in chapter six can also be made. No doubt an improvement in its performance could be obtained by increasing the complexity of its auxiliary servo amplifier to increase its gain and bandwidth while retaining adequate stability with high resistance recording electrodes, but it is questionable whether a further increase in common mode rejection, already over a hundred times that of a conventional system, could often be employed. Certainly it can be said that when normal stimulation was used, as distinct from the injection of artificially large common mode potentials into the preparation, the common components of the artefact obtained with the smallest electrodes used in this laboratory were always reduced to below the recording system noise level.

An additional advantage of the much higher rejection of common mode interference obtainable under practical conditions with this recording system, is the enhanced rejection of 'in-phase' potentials induced in the preparation from the supply mains, and of unwanted biological signals appearing as common mode potentials at the recording electrodes.

There would appear to be other applications for such a purely 'differential' amplifier in instrumentation in non-biological fields.

A system using both the Low Capacitance Stimulator and the High Rejection Ratio amplifier might be said to be capable of reducing to below noise level three of the components of any artefact likely to be met with in practice. Were it possible to make a similar claim for the Differential Attenuator Unit in dealing with the fourth component, a combination of the three units might have been held to constitute an 'ideal' anti-artefact system.

Unfortunately, there seems little chance that the Differential Attenuator Unit could ever be relied on to reduce every Differential Direct artefact component encountered to below noise level, indeed experience has shown that it is not always possible, with arbitrary electrode positions, to achieve the standard of rejection obtained in Fig. 7.3.1. On the other hand, it has been demonstrated that, using non-polarizable electrodes in an artificial resistive 'preparation', a much higher standard of rejection of the whole artefact can be attained, so that the disappointing results with real tissue can reasonably be ascribed to the properties of the tissues themselves. This being so, there is little to be gained by further development of the Differential Attenuator Unit.

Although the combination of the three units developed in the course of this study falls short of forming an 'ideal' anti-artefact system, in the sense of being able to eliminate any conceivable artefact, it may be argued that such a system comes near to being an optimum one in which further development of the apparatus would yield no significant improvement of the anti-artefact performance.

Acknowledgements

The work described in this thesis was supported by a Graduate Research Fellowship for which I am permanently indebted to the Faculty of Medicine of the University of Edinburgh.

During my tenure of the Fellowship I was attached to the Department of Medical Physics and wish to express my gratitude to Dr. J.R. Greening, Director of the Department, for his unfailing support and encouragement.

I wish also to thank my two Supervisors - Dr. J.A. Simpson, Director of the Neurological Unit of the Department of Medicine to which I was seconded during my period of study, under whose immediate supervision most of the work was carried out, and Dr. D.C. Simpson of the Department of Medical Physics, for many helpful discussions of the physical aspects of the investigation.

Finally, I wish to record my debt to my one time colleague, Dr. G.W. Pearce, who first drew my attention to the technical problems involved in recording the electrical activity of the nervous system.

References

Amatniek, E.

"A Feedback Controlled Stimulus Isolation Unit and its Biological Applications"

Proc. 2nd Int. Conf. Medical Electronics, 84, 1959

Andrew, A.M.

"Differential Amplifier Design"

Wireless Eng. 32, 73, 1955

Bishop, G.H.

"The Form of the Record of the Action Potential of Vertebrate Nerve at the Stimulated Region"

Amer. J. Physiol. 82, 462, 1927

Bishop, G.H.

"The Relation between the Threshold of Nerve Response and Polarization by Galvanic Current Stimuli"

Amer. J. Physiol. 84, 417, 1928

Bishop, G.H.

"The Reactance of Nerve and the Effect upon it of Electrical Currents"

Amer. J. Physiol. 89, 618, 1929

Bishop, G.H. & Clare, M.H.

"Responses of the Cortex to Direct Electrical Stimulation applied at various Depths"

J. Neurophysiol. 16, 1, 1953

Blumlein, A.D.

"Push-Pull Amplifiers with Common Cathode Loads"

British Patent No. 482740,
4th July, 1936

Buchthal, F., Guld, C. & Rosenfalck, P.

"Propagation Velocity in Electrically Activated Muscle Fibres in Man"

Acta. Physiol. Scand.
34, 75, 1955

Bureš, J.

"Electrophysiological Methods in Biological Research"
Bureš, J., Petráň, M. & Zachar, J.

Publishing House of the
Czechoslovak Academy of Sciences
Prague, 1960

Cole, K.S.

"Alternating Current Conductance and Direct Current Excitation of Nerve"

Science 79, February 1934

Dawson, G.D.

"A Summation Technique for the Detection of Small Evoked Potentials"
E.E.G. & Clin. Neurophysiol.
6, 65, 1954

Dickenson, C.J.

"Electrophysiological Technique"
Electronic Engineering 1950

Donaldson, P.E.K.

"Electronic Apparatus for Biological Research"

Butterworth's Scientific
Publications 1958

E.M.I. Laboratories

"Balanced Output Amplifiers of Highly Stable and Accurate Balance"

Electronic Eng. 18, 189, 1946

Frike, H.

"The Theory of Electrolytic Polarization"

Phil. Mag. 14, 310, 1932

George, R.E.

"A Transistor Stimulator for Physiological Use"

Electronic Eng. 31, 530, 1959

Goldberg, H.

"Bioelectric Research Apparatus"

Proc. I.R.E. 32, 330, 1944

Greer, J.R.

"Transistor Sub-Units for Biological Stimulators"

Proc. 3rd Int. Conf. Medical Electronics, Pt. 1, 68, 1960

Grundfest, H.

"Biological Requirements for the Design of Amplifiers"

Proc. I.R.E. 38, 1018, 1950

Guld, C.

"Use of Screened Power Transformers and Output Transformers to Reduce Stimulus Artefact"

Proc. 2nd Int. Conf. Medical Electronics 25, 1959

Guld, C.

"The Reduction of Stimulus Interference in Electrophysiology"

Proc. 3rd Int. Conf. Medical Electronics, Pt. 1, 103, 1960

Haapanen, L.

"A Radiofrequency Coupled Input Stage"

Acta. Physiol. Scand.,
25 (Supplement 89) 1951

Haapanen, L., Hyde, J. & Skoglund, C.R.

"The Application of Radiofrequency Coupled Input Stages and Stimulators to Neurophysiological Experiments"

Acta. Physiol. Scand.,
29 (Supplement 106) 1953

Johnston, D.L.

"Electroencephalograph Amplifier"

Wireless Eng. 24, 231, 1947

Landau, W.M.

"An Analysis of the Cortical Response to Antidromic Pyramidal Tract Stimulation in the Cat"

E.E.G. & Clin. Neurophysiol.,
8, 455, 1956

Matthews, B.H.C.

"A Special Purpose Amplifier"

Proceedings of the Physiological Society
J. Physiol. 81P, 28, 1934

Nightingale, A.

"The Sensitivity of L.F. Amplifiers for Electromyography"

J. Sc. Inst. 35, 366, 1958

Offner, F.F.

"A Push-Pull Resistance Coupled Amplifier"

Rev. Sc. Inst. 8, 20, 1937

Offner, F.F.

"Balanced Amplifiers"

Proc. I.R.E. 35, 306, 1947

Parnum, D.H.

"Transmission Factor of Differential Amplifiers"

Wireless Eng. 32, 125, 1950

Petráň, M.

"Electrophysiological Methods in Biological Research"
Bureš, J., Petráň, M. & Zachar, J.

Publishing House of the
Czechoslovak Academy of Sciences
Prague, 1960

Phillips, C.G.

"Cortical Motor Threshold and Thresholds and Distribution of Excited Betz Cells in the Cat"

Quart. J. Exp. Physiol.
41, 70, 1956

Richards, J.C.S.

"An Improved Type of Differential Amplifier"

Electronic Eng. 28, 302, 1956

Schaefer, H.

Pflüg. Arch. ges Physiol.
237, 717, 1936

Schmitt, O.H.

"A Radiofrequency Coupled Stimulator"

Science 107, 432, 1948

Schmitt, O.H., & Dubbert, D.R.

"Tissue Stimulators Utilizing Radiofrequency Coupling"

Rev. Sc. Inst. 20, 170, 1949

Svaetichin, G.

"Low Resistance Microelectrodes"

Acta. Physiol. Scand.
24, 278, 1952

Toennies, J.F.

"Differential Amplifiers"

Rev. Sc. Inst. 9, 95, 1938

Tommerdahl, J.B.

"A Pre-Amplifier for an Electrocardiograph Monitoring System"

I.R.E. Trans. Bio. Med.
BME8, 55, 1961

Weinman, J. & Mahler, Y.

"The Polarization Impedance of Stainless Steel Recording and Stimulating Electrodes in Saline"

Proc. 2nd Int. Conf. Medical
Electronics, 18, 1959

White, E.L.C.

U.S. Patent No. 2,358,428

September 19th, 1944

Whitfield, J.C.

"An Introduction to Electronics for Physiological Workers"

MacMillan, 1959

Appendix I

The Overall Transfer Functions of the Recording System.

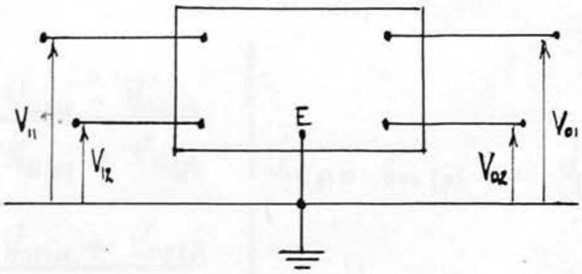

Let the recording system be represented by a five terminal network as shown. Let one terminal, E, be the reference or earth point.

Output voltages $V_{01(t)}$ and $V_{02(t)}$ correspond to input voltages $V_{11(t)}$ and $V_{12(t)}$. All of these voltages may be functions of time so that the relationship between the output and input voltages may be conveniently expressed in terms of their Laplace Transforms:-

$$\frac{V_{01(p)} - V_{02(p)}}{2} = M_{d(p)} \frac{V_{11(p)} - V_{12(p)}}{2} + M_{v(p)} \frac{V_{11(p)} + V_{12(p)}}{2} \dots (1)$$

$$\frac{V_{01(p)} + V_{02(p)}}{2} = M_{u(p)} \frac{V_{11(p)} - V_{12(p)}}{2} + M_{i(p)} \frac{V_{11(p)} + V_{12(p)}}{2} \dots (2)$$

Thus the four transfer functions relating the output of the network to its input are:-

$$M_{d(p)} = \frac{V_{o1(p)} - V_{o2(p)}}{V_{11(p)} - V_{12(p)}} \Bigg|_{V_{11(p)} = -V_{12(p)} = V_{(p)}}$$

$$M_{v(p)} = \frac{V_{o1(p)} - V_{o2(p)}}{V_{11(p)} + V_{12(p)}} \Bigg|_{V_{11(p)} = V_{12(p)} = V_{(p)}}$$

$$M_{u(p)} = \frac{V_{o1(p)} + V_{o2(p)}}{V_{11(p)} - V_{12(p)}} \Bigg|_{V_{11(p)} = -V_{12(p)} = V_{(p)}}$$

$$M_{i(p)} = \frac{V_{o1(p)} + V_{o2(p)}}{V_{11(p)} + V_{12(p)}} \Bigg|_{V_{11(p)} = V_{12(p)} = V_{(p)}}$$

For brevity we drop the (p)s it being understood that Laplace transforms are intended throughout the rest of the work. Thus Eqns. (1) and (2) may be written in matrix notation.

$$\begin{bmatrix} \dfrac{V_{o1} - V_{o2}}{2} \\[2ex] \dfrac{V_{o1} + V_{o2}}{2} \end{bmatrix} = \begin{bmatrix} M_d & M_v \\ M_u & M_i \end{bmatrix} \begin{bmatrix} \dfrac{V_{11} - V_{12}}{2} \\[2ex] \dfrac{V_{11} + V_{12}}{2} \end{bmatrix} \quad \text{----}(3)$$

This notation is particularly useful when several networks are connected in cascade, the output of each forming the input of the next. The output voltage of a chain of n such networks is related to the voltages at the input of the first network in the chain by:-

$$\begin{bmatrix} \frac{V_{01}-V_{02}}{2} \\ \frac{V_{01}+V_{02}}{2} \end{bmatrix} = \begin{bmatrix} Md_n & Mv_n \\ Mu_n & Mi_n \end{bmatrix} \begin{bmatrix} Md_{(n-1)} & Mv_{(n-1)} \\ Mu_{(n-1)} & Mi_{(n-1)} \end{bmatrix} \cdots \begin{bmatrix} Md_2 & Mv_2 \\ Mu_2 & Mi_2 \end{bmatrix} \begin{bmatrix} Md_1 & Mv_1 \\ Mu_1 & Mi_1 \end{bmatrix} \begin{bmatrix} \frac{V_{11}-V_{12}}{2} \\ \frac{V_{11}+V_{12}}{2} \end{bmatrix} \quad \cdots\cdots (4)$$

So that the overall transfer functions of the system are the elements of the overall transfer function matrix which can be obtained by matrix multiplication of the individual transfer function matrices of the sub-networks.

$$\begin{bmatrix} Md & Mv \\ Mu & Mi \end{bmatrix} = \begin{bmatrix} Md_n & Mv_n \\ Mu_n & Mi_n \end{bmatrix} \begin{bmatrix} Md_{(n-1)} & Mv_{(n-1)} \\ Mu_{(n-1)} & Mi_{(n-1)} \end{bmatrix} \cdots \begin{bmatrix} Md_2 & Mv_2 \\ Mu_2 & Mi_2 \end{bmatrix} \begin{bmatrix} Md_1 & Mv_1 \\ Mu_1 & Mi_1 \end{bmatrix} \quad \cdots\cdots (5)$$

Consider, for example, a three stage amplifier. Writing D_r, V_r, ... etc. for M_{dr}, M_{vr} ... etc., the transfer functions of the rth stage, we have:-

$$\begin{bmatrix} Md & Mv \\ Mu & Mi \end{bmatrix} = \begin{bmatrix} D_3 & V_3 \\ U_3 & I_3 \end{bmatrix} \begin{bmatrix} D_2 & V_2 \\ U_2 & I_2 \end{bmatrix} \begin{bmatrix} D_1 & V_1 \\ U_1 & I_1 \end{bmatrix}$$

$$= \begin{bmatrix} D_3 & V_3 \\ U_3 & I_3 \end{bmatrix} \begin{bmatrix} D_2D_1 + V_2U_1 & D_2V_2 + V_2I_1 \\ U_2D_1 + I_2U_1 & U_2V_1 + I_2I_1 \end{bmatrix}$$

$$= \begin{bmatrix} D_3 D_2 D_1 + D_3 V_2 U_1 & D_3 D_2 V_1 + D_3 V_2 I_1 \\ + V_3 U_2 D_1 + U_3 I_2 U_1 & + V_3 U_2 V_1 + V_3 I_2 I_1 \\ & \\ U_3 D_2 D_1 + U_3 V_2 U_1 & U_3 D_2 V_1 + U_3 V_2 I_1 \\ + I_3 V_2 D_1 + I_3 I_2 U_1 & + I_3 U_2 V_1 + I_3 I_2 I_1 \end{bmatrix} \quad \ldots . (6)$$

We are usually interested only in M_d and M_v which, from (6) are given by:-

$$M_d = D_3 D_2 D_1 + D_3 V_2 U_1 + V_3 U_2 D_1 + V_3 I_2 U_1 \quad \cdots\cdot (7)$$

$$M_v = D_3 D_2 V_1 + D_3 V_2 I_1 + V_3 U_2 V_1 + V_3 I_2 I_1 \quad \cdots\cdot (8)$$

When, as is often the case in Differential Amplifiers $D_r \gg V_r$, U_r, and I_r:-

$$M_d \doteqdot D_3 D_2 D_1 \quad \ldots . (9)$$

$$M_v \doteqdot D_3 D_2 V_1 \quad \ldots . (10)$$

Appendix II

Transfer Functions of an L.T.P. Stage

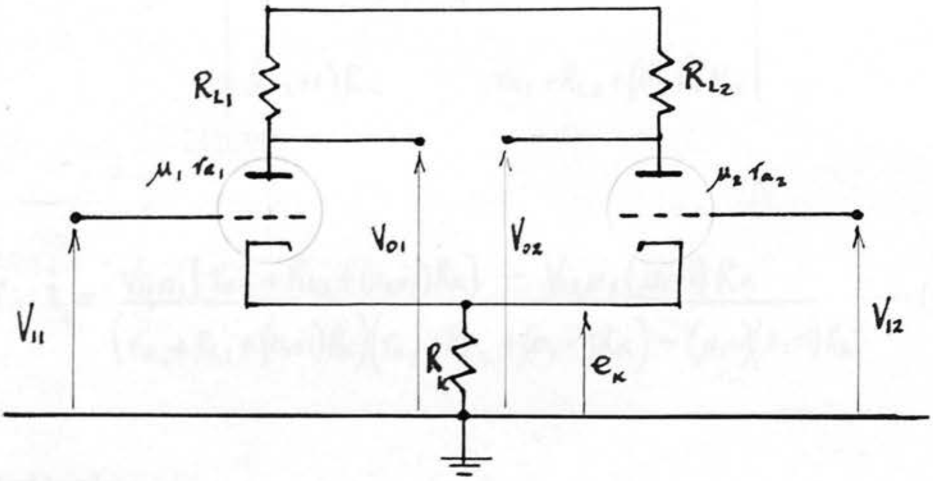

Fig. 1

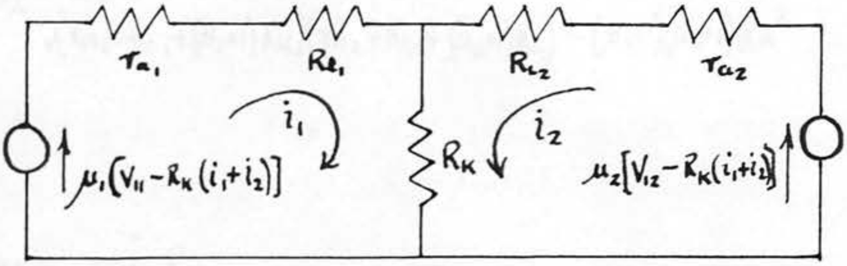

Fig. 2

Consider the L.T.P. circuit of Fig. 1 and its equivalent circuit of Fig. 2. We have:-

$$i_1\left(r_{a_1}+R_{L_1}+(\mu_1+1)\right) \quad + \quad i_2(\mu_1+1)R_K = \mu_1 V_{11} \quad \cdots\cdots (1)$$

$$i_1(\mu_2+1)R_K \quad + \quad i_2\left(r_{a_2}+R_{L_2}+(\mu_2+1)R_K\right) = \mu_2 V_{12} \quad \cdots (2)$$

Hence $$i_1 = \frac{\begin{vmatrix} \mu_1 V_{11} & (\mu_1+1)R_K \\ \mu_2 V_{12} & \left(r_{a_2} + R_{L_2} + (\mu_2+1)R_K\right) \end{vmatrix}}{\begin{vmatrix} r_{a_1} + R_{L_1} + (\mu_1+1)R_K & (\mu_1+1)R_K \\ (\mu_2+1)R_K & r_{a_2} + R_{L_2} + (\mu_2+1)R_K \end{vmatrix}} \quad \cdots (3)$$

$$\therefore\ i_1 = \frac{V_{11}\mu_1\left[r_{a_2} + R_{L_2} + (\mu_2+1)R_K\right] - V_{12}\mu_2(\mu_1+1)R_K}{\left(r_{a_1} + R_{L_1} + (\mu_1+1)R_K\right)\left(r_{a_2} + R_{L_2} + (\mu_2+1)R_K\right) - (\mu_1+1)(\mu_2+1)R_K^2} \quad \cdots (4)$$

Similarly,

$$i_2 = \frac{V_{12}\mu_2\left[r_{a_1} + R_{L_1} + (\mu_1+1)R_K\right] - V_{11}\mu_1(\mu_2+1)R_K}{\left(r_{a_1} + R_{L_1} + (\mu_1+1)R_K\right)\left(r_{a_2} + R_{L_2} + (\mu_2+1)R_K\right) - (\mu_1+1)(\mu_2+1)R_K^2} \quad \cdots (5)$$

Thus

$$V_{o1} = -i_1 R_{L_1}$$

$$= \frac{V_{12}R_{L_1}\mu_2(\mu_1+1)R_K - V_{11}R_{L_1}\mu_1\left[r_{a_2} + R_{L_2} + (\mu_2+1)R_K\right]}{\left(r_{a_1} + R_{L_1} + (\mu_1+1)R_K\right)\left(r_{a_2} + R_{L_2} + (\mu_2+1)R_K\right) - (\mu_1+1)(\mu_2+1)R_K^2} \quad \cdots (6)$$

$$V_{o2} = -i_2 R_{L_2}$$

$$= \frac{V_{11}R_{L_2}\mu_1(\mu_2+1)R_K - V_{12}R_{L_2}\mu_2\left(r_{a_1} + R_{L_1} + (\mu_1+1)R_K\right)}{\left(r_{a_1} + R_{L_1} + (\mu_1+1)R_K\right)\left(r_{a_2} + R_{L_2} + (\mu_2+1)R_K\right) - (\mu_2+1)(\mu_1+1)R_K^2} \quad \cdots (7)$$

and

$$e_K = (i_1 + i_2)R_K$$

$$= \frac{R_K\left[V_{11}\left[\mu_1(r_{a_2} + R_{L_2})\right] + V_{12}\left[\mu_2(r_{a_1} + R_{L_1})\right]\right]}{\left(r_{a_1} + R_{L_1} + (\mu_1+1)R_K\right)\left(r_{a_2} + R_{L_2} + (\mu_2+1)R_K\right) - (\mu_1+1)(\mu_2+1)R_K^2} \quad \cdots (8)$$

Note. For $\mu_1 \doteqdot \mu_2 = \mu$, $r_{a_1} \doteqdot r_{a_2} = r_a$, $R_{L_1} \doteqdot R_{L_2} = R_L$ and $\mu \gg 1$

so that $2(\mu+1)R_K \doteqdot 2\mu R_K \gg (r_a + R_L)$ then:-

$$e_K \doteqdot \frac{V_{11} + V_{12}}{2} \qquad \cdots\cdots (9)$$

A potential which can be very nearly equal to the common mode component of the input to the stage thus appears at its cathode.

The Transfer function matrix for the stage is $\begin{bmatrix} M_d & M_v \\ M_u & M_i \end{bmatrix}$ where:-

$$M_d = \left.\frac{\frac{V_{01} - V_{02}}{2}}{\frac{V_{11} - V_{12}}{2}}\right|_{V_{11} = -V_{12} = V}$$

$$= \frac{\mu_2\left[R_{L_2}\left(r_{a_1} + R_{L_1} + (\mu_1+1)R_K\right) + R_{L_1}(\mu_1+1)R_K\right] + \mu_1\left[R_{L_1}\left(r_{a_2} + R_{L_2} + (\mu_2+1)R_K\right) + R_{L_2}(\mu_2+1)R_K\right]}{\left[r_{a_1} + R_{L_1} + (\mu_1+1)R_K\right]\left[r_{a_2} + R_{L_2} + (\mu_2+1)R_K\right] - (\mu_1+1)(\mu_2+1)R_K^2}$$

$$\cdots\cdots (10)$$

$$\doteqdot \frac{\mu R_L}{r_a + R_L} \qquad \cdots\cdots (11)$$

for $\mu_1 \doteqdot \mu_2 = \mu$

$r_{a_1} \doteqdot r_{a_2} = r_a$

$R_{L_1} \doteqdot R_{L_2} = R_L$

$(\mu+1)R_K \gg (r_a + R_L)$

$$\doteqdot g_m . R_L \qquad \cdots\cdots (12)$$

in the case of pentodes

when $r_a \gg R_L$

Likewise,

$$M_V = \left.\frac{\frac{V_{01}-V_{02}}{2}}{\frac{V_{11}+V_{12}}{2}}\right|_{V_{11}=V_{12}=V}$$

$$\simeq \frac{\mu_2 R_{L2} r_{a1} - \mu_1 R_{L1} r_{a2} + (\mu_2-\mu_1)\left[R_{L1}R_{L2}+(R_{L1}+R_{L2})R_K\right]}{(r_a+R_L)(r_a+R_L+2(\mu+1)R_K)}$$

----(13) for triodes

$$= \frac{r_a^2(g_{m2}R_{L2}-g_{m1}R_{L1}) + (\mu_2-\mu_1)R_L(R_L+2R_K)}{(r_a+R_L)(r_a+R_L+2(\mu+1)R_K)}$$

·····(14) for pentodes

$$M_i = \left.\frac{\frac{V_{01}+V_{02}}{2}}{\frac{V_{11}+V_{12}}{2}}\right|_{V_{11}=V_{12}=V}$$

$$= -\left[\frac{\tfrac{1}{2}(\mu_1-\mu_2)(R_{L1}-R_{L2})R_K + \mu R_L(r_a+R_L)}{(r_a+R_L)(r_a+R_L+2(\mu+1)R_K}\right] \cdots\cdots (15)$$

$$= -\left[\frac{\Delta\mu}{2\mu}\cdot\frac{\Delta R_L}{2\,r_a+R_L} + \frac{R_L}{2R_K}\right] \cdots\cdots (16)$$

for $(\mu+1)R_K \gg r_a+R_L$

$\mu \gg 1$ etc.

and

$$M_u = \left.\frac{\frac{V_{01}+V_{02}}{2}}{\frac{V_{11}-V_{12}}{2}}\right|_{V_{11}=-V_{12}=V}$$

$$= \frac{2(R_{L2}-R_{L1})R_K(\mu_1\mu_2+1) + R_{L1}R_{L2}(\mu_2-\mu_1) + (\mu_2R_{L2}r_{a1}-\mu_1R_{L1}r_{a2})}{2(r_a+R_L)(r_a+R_L+2(\mu+1)R_K)}$$

·····(17)

Of particular interest are M_d and M_v because of the way in which they enter into the overall transfer functions of the recording system. To take into account the effect of stray capacitance on the high frequency performance of the stage let it be assumed that the total strays are represented by capacitors C_1 and C_2 in parallel with R and R respectively.

The anode loads then become

$$Z_{1(p)} = \frac{R_{L1}}{T_1(p + 1/T_1)} \quad \text{and} \quad Z_{2(p)} = \frac{R_{L2}}{T_2(p + 1/T_2)} \qquad \begin{array}{l} T_1 = R_{L1}C_1 \\ T_2 = R_{L2}C_2 \end{array}$$

Then

$$Md_{(p)} \doteqdot \frac{\mu Z}{r_a + Z} \quad \text{or} \quad g_m . Z \quad \cdots (18) \quad \text{assuming } Z_{1(p)} \doteqdot Z_{2(p)}$$

In either case $M_{d(p)}$ will be approximately of the form $\dfrac{G}{T(p + 1/T)}$ where G is the gain of the stage.

Similarly, assuming a capacitance C_K in parallel with the cathode resistor R_K, so that $Z_K = \dfrac{R_K}{T_K(p + 1/T_K)}$ where $T_K = R_K C_K$, we have:-

$$M_{v(p)} = \frac{r_a^2(g_{m1}Z_1 - g_{m2}Z_2) + (\mu_1 - \mu_2)Z(Z + 2Z_K)}{(Z + r_a)(Z + r_a + 2(\mu+1)Z_K)} \quad \cdots\cdots (19)$$

$$\doteqdot \frac{(g_{m1}Z_1 - g_{m2}Z_2)}{[1 + Z/r_a][(1 + Z/r_a) + 2g_m Z_K]} + \frac{(\mu_1 - \mu_2)(Z + 2Z_K)Z}{(r_a + Z)(r_a + Z + 2(\mu+1)Z_K)} \quad \cdots (20)$$

$$\doteqdot \frac{g_{m1}Z_1 - g_{m2}Z_2}{2g_m Z_K} + \frac{(\mu_1 - \mu_2)Z}{\mu r_a} \quad \cdots\cdots (21)$$

$$\begin{array}{l} \text{for } r_a \gg Z \\ \qquad \mu \gg 1 \\ 2(\mu+1)Z_K \gg r_a + Z. \end{array}$$

$$= \left[\frac{T_K\left(p+1/T_K\right)\left(g\mu_2 R_{L2}(pT_1+1) - g\mu_1 R_{L1}(pT_2+1)\right)}{2g_m R_K T_1 T_2 \left(\quad (p+1/T_1)(p+1/T_2) \quad \right)} + \frac{(\mu_2-\mu_1) R_L}{T_a \mu T (p+1/T)} \right] \quad \text{....} (22)$$

Appendix III

The Transfer Function Matrix of a Passive Network

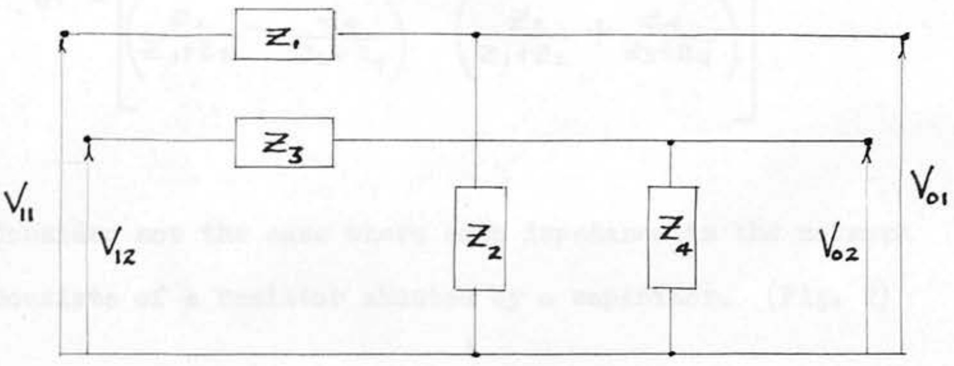

Fig. 1

Consider a five terminal network composed of four passive impedances Z_1 to Z_4 as shown in Fig. 1.

We have $V_{01(p)} = V_{11(p)}\left(\frac{Z_2}{Z_1+Z_2}\right)$, $V_{02(p)} = V_{12(p)}\left(\frac{Z_4}{Z_3+Z_4}\right)$

Hence,

$$M_{d(p)} = \left.\frac{\frac{V_{01}-V_{02}}{2}}{\frac{V_{11}-V_{12}}{2}}\right|_{V_{11}=-V_{12}=V} = \frac{1}{2}\left[\frac{Z_2}{Z_1+Z_2} + \frac{Z_4}{Z_3+Z_4}\right]$$

$$M_{V(p)} = \left.\frac{\frac{V_{01}-V_{02}}{2}}{\frac{V_{11}+V_{12}}{2}}\right|_{V_{11}=V_{12}=V} = \frac{1}{2}\left[\frac{Z_2}{Z_1+Z_2} - \frac{Z_4}{Z_3+Z_4}\right]$$

$$M_{t(p)} = \left.\frac{\frac{V_{01}+V_{02}}{2}}{\frac{V_{11}+V_{12}}{2}}\right|_{V_{11}=+V_{12}=V} = \frac{1}{2}\left[\frac{Z_2}{Z_1+Z_2} + \frac{Z_4}{Z_3+Z_4}\right] = M_{d(p)}$$

$$M_{u(p)} = \left.\frac{\frac{V_{01}+V_{02}}{2}}{\frac{V_{11}-V_{12}}{2}}\right|_{V_{11}=-V_{12}=V} = \frac{1}{2}\left[\frac{Z_2}{Z_1+Z_2} - \frac{Z_4}{Z_3+Z_4}\right] = M_{V(p)}$$

Thus the Transfer Function Matrix of the Passive Network is:-

$$M_{(p)} = \frac{1}{2}\begin{bmatrix} \left(\frac{Z_2}{Z_1+Z_2} + \frac{Z_4}{Z_3+Z_4}\right) & \left(\frac{Z_2}{Z_1+Z_2} - \frac{Z_4}{Z_3+Z_4}\right) \\ \left(\frac{Z_2}{Z_1+Z_2} - \frac{Z_4}{Z_3+Z_4}\right) & \left(\frac{Z_2}{Z_1+Z_2} + \frac{Z_4}{Z_3+Z_4}\right) \end{bmatrix}$$

Consider now the case where each impedance in the network consists of a resistor shunted by a capacitor. (Fig. 2)

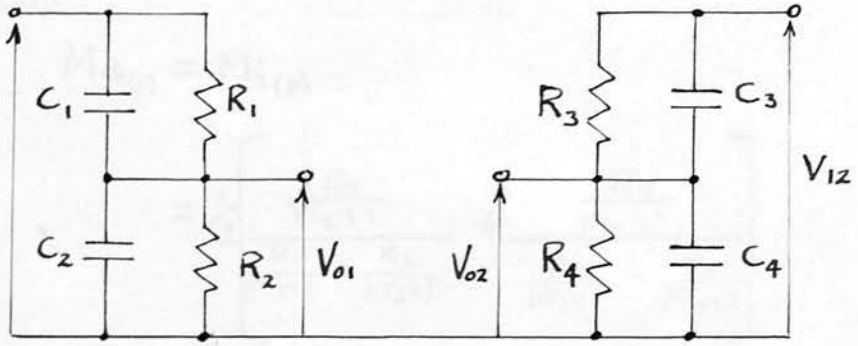

Fig. 2

Here $Z_r = \frac{R_r}{1+pT_r}$ where $T_r = R_r C_r$, $r = 1, 2, 3, 4$.

Thus

$$M_{V_{(p)}} = M_{u_{(p)}}$$

$$= \frac{1}{2}\left[\frac{\frac{R_2}{pT_2+1}}{\frac{R_1}{pT_1+1} + \frac{R_2}{pT_2+1}} - \frac{\frac{R_4}{pT_4+1}}{\frac{R_3}{pT_3+1} + \frac{R_4}{pT_4+1}}\right]$$

$$= \frac{1}{2}\left[\frac{Pp^2 + Qp + R}{S(p+\frac{1}{T_{12}})(p+\frac{1}{T_{34}})}\right]$$

Where
$$T_{12} = \frac{R_1 R_2}{R_1+R_2}(C_1+C_2)$$

$$T_{34} = \frac{R_3 R_4}{R_3+R_4}(C_3+C_4)$$

$$P = (R_1R_2R_3R_4)(C_1C_4 - C_2C_3)$$

$$Q = R_2R_3(T_1+T_4) - R_1R_4(T_2+T_3)$$

$$R = R_2R_3 - R_1R_4$$

$$S = (R_1+R_2)(R_3+R_4)T_{12}\,T_{34}$$

Similarly
$$Md_{(p)} = Mi_{(p)}$$

$$= \tfrac{1}{2}\left[\frac{\dfrac{R_2}{pT_2+1}}{\dfrac{R_1}{pT_1+1}+\dfrac{R_2}{pT_2+1}} + \frac{\dfrac{R_4}{pT_4+1}}{\dfrac{R_3}{pT_3+1}+\dfrac{R_4}{pT_4+1}}\right]$$

$$= \tfrac{1}{2}\left[\frac{Up^2+Vp+W}{S(p+1/T_{12})(p+1/T_{34})}\right]$$

Where
$$U = 2R_2R_4T_1T_3 + R_2R_3T_1T_4 + R_1R_4T_2T_3$$

$$V = 2R_2R_4(T_1+T_3) + R_2R_3(T_1+T_4) + R_1R_4(T_2+T_3)$$

$$W = 2R_2R_4 + R_2R_3 + R_1R_4$$

Special Cases

Case 1 - Resistive Electrodes and Infinite Input Resistance

This case occurs when the recording electrodes can be regarded as pure resistances and the resistance to earth from each amplifier input terminal is very high, as when grid leaks are omitted. Then C_1 and C_2 tend to zero and R_2 and R_4 tend to infinity. Thus $T_{12} \doteq R_1C_2$ and $T_{34} \doteq R_3C_4$. So the transfer functions become:-

$$M_{d_{(p)}} = M_{i_{(p)}} = \tfrac{1}{2}\left[\frac{T_{34}\left(p+\frac{1}{T_{34}}\right) + T_{12}\left(p+\frac{1}{T_{12}}\right)}{T_{12}\,T_{34}\left(p+\frac{1}{T_{12}}\right)\left(p+\frac{1}{T_{34}}\right)}\right]$$

$$M_{v_{(p)}} = M_{u_{(p)}} = \tfrac{1}{2}\left[\frac{p\left(T_{34}-T_{12}\right)}{T_{12}\,T_{34}\left(p+\frac{1}{T_{12}}\right)\left(p+\frac{1}{T_{34}}\right)}\right]$$

Case 2 - The Skin Electrode Case

Here $C_3 \gg C_4$, $C_1 \gg C_2$ and $R_3 \ll R_4$, $R_1 \ll R_2$

Hence $T_{12} \doteq T_1$ and $T_{34} \doteq T_3$ Thus:-

$$M_{d_{(p)}} = M_{i_{(p)}}$$

$$= \tfrac{1}{2}\left[\frac{2R_2R_4(pT_1+1)(pT_3+1) + R_2R_3(pT_1+1)(pT_4+1) + R_1R_4(pT_2+1)(pT_3+1)}{(R_1+R_2)(R_3+R_4)(pT_1+1)(pT_3+1)}\right]$$

$$= \tfrac{1}{2}\left[\frac{2R_2R_4}{(R_1+R_2)(R_3+R_4)} + \frac{R_2R_3}{(R_1+R_2)(R_3+R_4)}\cdot\frac{(pT_4+1)}{(pT_3+1)} + \frac{R_1R_4}{(R_1+R_2)(R_3+R_4)}\cdot\frac{(pT_2+1)}{(pT_1+1)}\right]$$

$$\doteq 1 + \tfrac{1}{2}\left[\frac{R_3}{R_4}\,\frac{(pT_4+1)}{(pT_3+1)} + \frac{R_1}{R_2}\,\frac{(pT_2+1)}{(pT_1+1)}\right]$$

for $R_2 \gg R_1$

$R_4 \gg R_3$

and

$$M_{V(p)} = M_{u(p)} = \frac{1}{2}\left[\frac{R_2R_3(pT_1+1)(pT_2+1) - R_1R_4(pT_2+1)(pT_3+1)}{(R_1+R_2)(R_3+R_4)(pT_1+1)(pT_3+1)}\right]$$

When $T_1 = T_3 = T$

$$M_{V(p)} = M_{u(p)} \doteq \frac{1}{2}\left[\frac{R_2R_3(pT_4+1) - R_1R_4(pT_2+1)}{(R_1+R_2)(R_3+R_4)(pT+1)}\right]$$

$$\doteq \frac{1}{2}\left[\frac{R_3/R_4\,(pT_4+1) - R_1/R_2\,(pT_2+1)}{T(p+1/T)}\right]$$

for $R_2, R_4 \gg R_1, R_3$.

For $T_1 \neq T_3$ but $T_2 \gg T_1$ and $T_4 \gg T_3$

$$M_{V(p)} = M_{u(p)} \doteq \frac{1}{2}\left[\frac{R_2R_3(pT_4+1) - R_1R_4(pT_2+1)}{(R_1+R_2)(R_3+R_4)(pT_1+1)(pT_3+1)}\right]$$

$$\doteq \frac{1}{2}\left[\frac{R_3/R_4\,(pT_4+1) - R_1/R_2\,(pT_2+1)}{T_1T_3(p+1/T_1)(p+1/T_3)}\right]$$

for $R_2 \,\&\, R_4 \gg R_1 \,\&\, R_3$

For $T_1 \neq T_3$ but $T_2 \gg T_1$ and $T_4 \gg T_3$

$$M_{V(p)} = M_{u(p)} \doteq \frac{1}{2}\left[\frac{R_2R_3(pT_1+1) - R_1R_4(pT_3+1)}{(R_1+R_2)(R_3+R_4)(pT_1+1)(pT_3+1)}\right]$$

$$\doteq \frac{1}{2}\left[\frac{R_3}{R_4}\cdot\frac{1}{T_3(p+1/T_3)} - \frac{R_1}{R_2}\cdot\frac{1}{T_1(p+1/T_1)}\right]$$

for $R_2 \,\&\, R_4 \gg R_1 \,\&\, R_3$

Appendix IV

Evaluation of $A_{(p)}$

I Purely Resistive Stimulating Electrodes

(1) Constant Voltage Stimulator

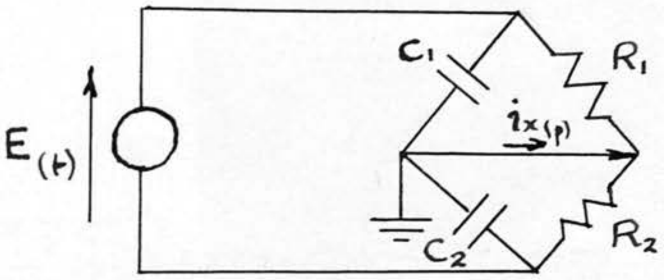

Fig. 1.

Let the stimulator voltage $E_{(p)}$ produce an escape current $I_{x_{(p)}}$ in the earth lead (Fig. 1.)

Using Thévènins theorem to find the out of balance current $I_{x_{(p)}}$, we have:-

$$I_{x_{(p)}} = \frac{E_{x(p)}}{Z_B}$$

where

$$E_{x_{(p)}} = E_{(p)}\left[\frac{C_1}{C_1+C_2} - \frac{R_2}{R_1+R_2}\right]$$

and

$$Z_B = \frac{R_1R_2}{p(R_1+R_2)}\left[p + \frac{1}{(C_1+C_2)\frac{R_1R_2}{R_1+R_2}}\right]$$

$$\therefore \frac{I_{x(p)}}{E_{(p)}} = \left[\frac{C_1R_1 - C_2R_2}{(C_1+C_2)\frac{R_1R_2}{R_1+R_2}}\right]\left[\frac{p}{R_1+R_2}\right]\left[\frac{1}{p+\frac{1}{(C_1+C_2)\frac{R_1R_2}{R_1+R_2}}}\right]$$

$$= \frac{1}{(R_1+R_2)} \cdot \frac{T_1 - T_2}{T} \cdot \left(\frac{p}{p+1/T}\right) \cdots\cdots (1)$$

Where $\quad T_1 = C_1R_1, \; T_2 = C_2R_2, \; T = (C_1+C_2)\frac{R_1R_2}{R_1+R_2}$

Now, so long as it is valid to represent the stimulating electrode impedances by resistors R_1 and R_2, the stimulus current $I_{s(p)}$ is given by:-

$$I_{s(p)} = \frac{E_{(p)}}{R_1+R_2}$$

$$\therefore \quad E_{(p)} = I_{s(p)}(R_1+R_2)$$

Hence, from (1),

$$A_{1(p)} = \frac{I_{x(p)}}{I_{s(p)}} = \frac{(T_1-T_2)}{T} \cdot \frac{p}{(p+1/T)} \quad \cdots\cdots (2)$$

(2) Constant Current Stimulator

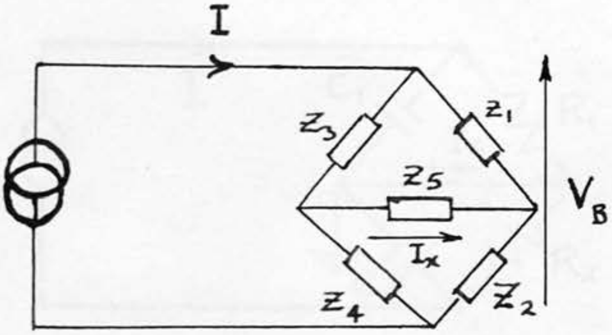

Fig.2

For the circuit of Fig. 2, assuming that the earth electrode impedance Z_5 is negligible compared with Z_1, Z_2, Z_3 and Z_4, the escape current $I_{x(p)}$ is given by:-

$$I_{x(p)} = \frac{V_{x(p)}}{Z_T}$$

where $$V_{x(p)} = V_{B(p)}\left[\frac{Z_4}{Z_3+Z_4} - \frac{Z_2}{Z_1+Z_2}\right]$$

and $$Z_T = \frac{(Z_1+Z_3)(Z_2+Z_4)}{Z_1+Z_2+Z_3+Z_4}$$

Now,

$$V_{B_{(p)}} = I_{(p)}\left[\frac{Z_1 Z_3}{Z_1 + Z_3} + \frac{Z_2 Z_4}{Z_2 + Z_4}\right]$$

$$\therefore I_{x_{(p)}} = \frac{I\left[\frac{Z_1 Z_3}{Z_1+Z_3} + \frac{Z_2 Z_4}{Z_2+Z_4}\right]\left[\frac{Z_4}{Z_3+Z_4} - \frac{Z_2}{Z_1+Z_2}\right]}{\frac{(Z_1+Z_3)(Z_2+Z_4)}{Z_1+Z_2+Z_3+Z_4}}$$

$$\therefore A_{2_{(p)}} = \frac{I_{x(p)}}{I_{(p)}} = \left[\frac{Z_1Z_4 - Z_2Z_3}{(Z_1+Z_2)(Z_3+Z_4)}\right]\left[\frac{Z_1Z_3(Z_2+Z_4)+Z_2Z_4(Z_1+Z_3)}{(Z_1+Z_3)(Z_2+Z_4)}\right]\left[\frac{Z_1+Z_2+Z_3+Z_4}{(Z_1+Z_3)(Z_2+Z_4)}\right] \quad \cdots\cdots(3)$$

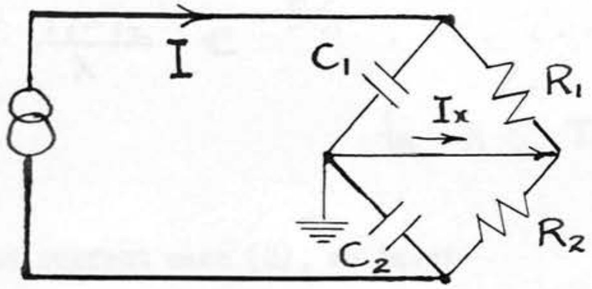

Fig. 3.

For the circuit of Fig. 3, Eqn. (3) reduces to:-

$$A_{2_{(p)}} = \left[\frac{C_1R_1 - C_2R_2}{(C_1+C_2)(R_1+R_2)}\right]\left[\frac{C_2(p+1/T_2)+C_1(p+1/T_1)}{C_1C_2(p+1/T_2)(p+1/T_1)}\right]\left[\frac{p\left[R_1(p+1/T_1)+R_2(p+1/T_2)\right]}{R_1R_2(p+1/T_1)(p+1/T_2)}\right]$$

where $T_1 = C_1R_1$, $T_2 = C_2R_2$

$$= \frac{p}{T_1T_2}\left(\frac{T_1-T_2}{(C_1+C_2)(R_1+R_2)}\right)\left(\frac{T_1(p+1/T_1)^2 + (C_1R_2+C_2R_1)(p+1/T_1)(p+1/T_2) + T_2(p+1/T_2)^2}{(p+1/T_1)^2(p+1/T_2)^2}\right)$$

$$\cdots\cdots(4)$$

(3) Escape Current for Stimulus Pulse of Finite Rise Time.

Consider the escape current obtained when the stimulus pulse has exponentially rising and falling edges of time constant λ. The rising edge of the stimulus current pulse is given by:-

$$I_{(t)} = I\left(1 - e^{-t/\lambda}\right)$$

$$\therefore I_{(p)} = \frac{I}{\lambda} \cdot \frac{1}{p(p+1/\lambda)}$$

Thus, in the constant voltage case (1), we have:-

$$I_{x_{(p)}} = I_{(p)} A_{1_{(p)}} = \frac{I}{\lambda} \cdot \frac{T_1 - T_2}{T} \cdot \frac{1}{(p+1/\lambda)(p+1/T)}$$

$$\therefore I_{x_{(t)}} = I\,\frac{T_1 - T_2}{\lambda - T}\left(e^{-t/\lambda} - e^{-t/T}\right) \quad \ldots\ldots (5)$$

$$\doteq I\,\frac{T_1 - T_2}{\lambda}\, e^{-t/\lambda} \quad \ldots\ldots\ldots (6)$$

$$\text{for } \lambda \gg T$$

In the constant current case (2), we have:-

$$I_{x_{(p)}} = I_{(p)} A_{2_{(p)}}$$

$$= \frac{I}{\lambda T_1 T_2}\left[\frac{T_1 - T_2}{(C_1+C_2)(R_1+R_2)}\right]\left[\frac{T_1(p+1/T_1)^2 + (C_1R_2+C_2R_1)(p+1/T_1)(p+1/T_2) + T_2(p+1/T_2)^2}{(p+1/\lambda)(p+1/T_1)^2(p+1/T_2)^2}\right]$$

Whence

$$I_{x_{(t)}} = I\left[\frac{T_1-T_2}{(C_1+C_2)(R_1+R_2)}\right]\Bigg[\frac{\lambda}{T_1T_2}\left[T_1\left(\frac{T_2}{\lambda-T_2}\right)^2+\left(C_1R_2+R_1C_2\right)\left(\frac{T_1}{\lambda-T_1}\right)\left(\frac{T_2}{\lambda-T_2}\right)+T_2\left(\frac{T_1}{\lambda-T_1}\right)^2\right]e^{-t/\lambda}$$

$$+\frac{1}{T_1-T_2}\left[\left(C_1R_2-C_2R_1\right)+\lambda\left(\frac{T_1}{\lambda-T_1}+\frac{T_2}{\lambda-T_2}\right)\right]\left(e^{-t/T_1}-e^{-t/T_2}\right)$$

$$-\frac{\lambda/T_1T_2}{T_1-T_2}\left[T_1\left(\frac{T_2}{\lambda-T_2}\right)^2+\left(C_1R_2+C_2R_1\right)\left(\frac{T_1}{\lambda-T_1}\right)\left(\frac{T_2}{\lambda-T_2}\right)+T_2\left(\frac{T_1}{\lambda-T_1}\right)^2\right]\left[(\lambda-T_2)e^{-t/T_1}-(\lambda-T_1)e^{-t/T_2}\right]$$

$$-\left(\frac{T_1}{\lambda-T_1}\right)\frac{t}{T_1}e^{-t/T_1}-\left(\frac{T_2}{\lambda-T_2}\right)\frac{t}{T_2}e^{-t/T_2}\Bigg] \quad \text{- - - - (7)}$$

$$\doteqdot I\left(\frac{T_1-T_2}{\lambda}\right)e^{-t/\lambda} \quad \text{. . . . . (8)}$$

for $\lambda \gg T_1$, $\lambda \gg T_2$.

Note that the escape current in both the constant voltage and constant current cases when the rise time constant of the stimulus pulse is much greater than the time constants of the stimulus capacitances to earth with the stimulating electrode resistances, is virtually the same as would have been obtained had the transfer functions of the circuits been:-

$$A_{(p)} = p(T_1 - T_2)$$

Then,

$$I_{x_{(p)}} = I_{(p)} A_{(p)}$$

$$= \frac{I}{\lambda}(T_1 - T_2) \cdot \frac{\cancel{p}}{\cancel{p}(p + 1/\lambda)} = I \cdot \frac{(T_1 - T_2)}{\lambda} \cdot \frac{1}{(p + 1/\lambda)}$$

$$\therefore \quad I_{x_{(t)}} = I\left(\frac{T_1 - T_2}{\lambda}\right) e^{-t/\lambda} \quad \ldots\ldots \ (9)$$

So that

$$A_{1_{(p)}} \doteq A_{2_{(p)}} \doteq A_{(p)} = p(T_1 - T_2) \quad \cdots (10)$$

II Skin Surface Electrodes

(1) Constant Voltage Case

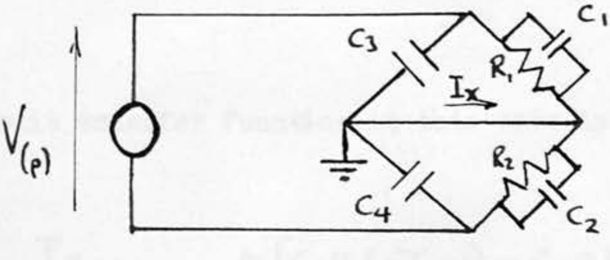

Fig. 4.

In the circuit of Fig. 4 the escape current is given by:-

$$I_{x_{(p)}} = \frac{V_{x_{(p)}}}{Z_{B_{(p)}}}$$

Where

$$V_{x_{(p)}} = V_{(p)}\left[\frac{C_3}{C_3+C_4} - \frac{\dfrac{R_2}{(1+pT_2)}}{\dfrac{R_1}{(pT_1+1)} + \dfrac{R_2}{(pT_2+1)}}\right]$$

$$T_1 = C_1R_1$$

$$T_2 = C_2R_2$$

$$Z_{B_{(p)}} = \frac{1}{p(C_3+C_4)} + \frac{\dfrac{R_1}{pT_1+1}\cdot\dfrac{R_2}{pT_2+1}}{\dfrac{R_1}{pT_1+1} + \dfrac{R_2}{pT_2+1}}$$

$$\therefore I_{x_{(p)}} = \frac{V_{(p)}\,p.\left[C_3R_1(pT_2+1) - C_4R_2(pT_1+1)\right]}{\left[R_1T_2+R_2T_1+R_1R_2(C_3+C_4)\right]\left[p + \dfrac{(R_1+R_2)}{R_1T_2+R_2T_1+R_1R_2(C_3+C_4)}\right]}$$

$$= \frac{V_{(p)}\,p\left[C_3R_1(pT_2+1) - C_4R_2(pT_1+1)\right]}{(R_1+R_2)\left[\dfrac{R_1}{R_1+R_2}T_2 + \dfrac{R_2}{R_1+R_2}T_1 + T\right]\left[p + \dfrac{1}{\frac{R_1}{R_1+R_2}T_2 + \frac{R_2}{R_1+R_2}T_1 + T}\right]}$$

$$T = \frac{R_1R_2}{R_1+R_2}(C_3+C_4)$$

$$= \frac{V_{(p)}\,p\left[C_3R_1(pT_2+1) - C_4R_2(pT_1+1)\right]}{(R_1+R_2)\,T'\left(p+\frac{1}{T'}\right)}$$

$$T' = \left(\frac{R_1}{R_1+R_2}T_2 + \frac{R_2}{R_1+R_2}T_1 + T\right)$$

The circuit transfer function in this case is given by $A_{e_{(p)}}$ where:-

$$A_{E_{(p)}} = \frac{I_{x(p)}}{V_{(p)}} = \frac{p\left[C_3R_1(pT_2+1) - C_4R_2(pT_1+1)\right]}{(R_1+R_2)\,T'\left(p+\frac{1}{T'}\right)}$$

$$\cdots\cdots(11)$$

Now assume a form $E(1 - e^{-t/\lambda})$ for the stimulating voltage $V_{(t)}$

Hence,

$$I_{x_{(p)}} = A_{E_{(p)}} \cdot V_{(p)} = \frac{E}{\lambda \mathcal{T}(R_1+R_2)} \cdot \frac{\left[C_3 R_1 (pT_2+1) - C_4 R_2 (pT_1+1)\right]}{(p+1/\lambda)(p+1/\mathcal{T})}$$

So that

$$I_{x_{(t)}} = \frac{E}{(R_1+R_2)} \left[\frac{C_3 R_1 (pT_2+1) - C_4 R_2 (pT_1+1)}{\mathcal{T} - \lambda} e^{-t/\lambda} + \frac{\frac{T}{\mathcal{T}}\left[(T_1-T_2) + (C_3 R_1 - C_4 R_2)\right]}{T - \lambda} e^{-t/\mathcal{T}} \right]$$

$$\ldots . (12)$$

If the assumption is made that T_1, T_2 and $\mathcal{T}$ are all very much greater than λ, almost always valid for skin surface stimulation, then the escape current is given approximately by:-

$$I_{x_{(t)}} = \frac{E}{R_1+R_2} \left[\frac{\frac{T_2}{\mathcal{T}} C_3 R_1 - \frac{T_1}{\mathcal{T}} C_4 R_2}{\lambda} e^{-t/\lambda} + \frac{T}{\mathcal{T}} \cdot \frac{(T_1-T_2) + (C_3 R_1 - C_4 R_2)}{\mathcal{T}} e^{-t/\mathcal{T}} \right]$$

$$\ldots . (13)$$

(2) Constant Current Case

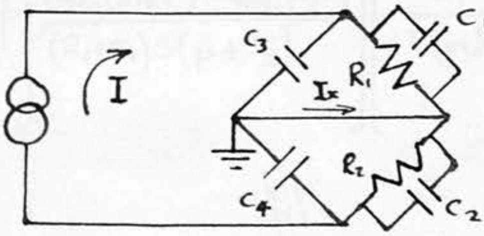

Fig. 5

We assume that C_3 and C_4 are much smaller than C_1 and C_2, so that T_1 and T_2 are much greater than R_1C_3 and R_2C_4.

Then

$$I_{x_{(p)}} = \frac{I_{(p)}\, K_{(p)}\, Z_{B(p)}}{Z_{T(p)}}$$

Where

$$K_{(p)} = \frac{C_3}{C_3+C_4} - \frac{\dfrac{R_2}{pT_2+1}}{\dfrac{R_1}{pT_1+1} + \dfrac{R_2}{pT_2+1}}$$

$$= \frac{C_3R_1(pT_2+1) - C_4R_2(pT_1+1)}{(C_3+C_4)(R_1+R_2)(pS+1)}$$

$$S = \left(\frac{R_1}{R_1+R_2}T_2 + \frac{R_2}{R_1+R_2}T_1\right)$$

$$Z_{T_{(p)}} = \frac{\left(\dfrac{R_1}{pT_1+1} + \dfrac{1}{pC_3}\right)\left(\dfrac{R_2}{pT_2+1} + \dfrac{1}{pC_4}\right)}{\dfrac{R_1}{pT_1+1} + \dfrac{R_2}{pT_2+1} + \dfrac{1}{pC_3} + \dfrac{1}{pC_4}}$$

$$\doteqdot \frac{1}{p(C_3+C_4)} \qquad \text{for } R_1C_3 \ll T_1,\ R_2C_4 \ll T_2$$

$$Z_{B_{(p)}} = \left(\frac{R_1}{pT_1+1} + \frac{R_2}{pT_2+1}\right)$$

Then

$$A_{(p)} = \frac{I_{x(p)}}{I_{(p)}} = p\left[\frac{C_3R_1(pT_2+1) - C_4R_2(pT_1+1)}{(R_1+R_2)S(p+1/S)}\right]\left[\frac{R_1}{T_1(p+1/T_1)} + \frac{R_2}{T_2(p+1/T_2)}\right]$$

$$\cdots\cdots(14)$$

The escape current I_x when the stimulus current is given by $I_{(t)} = I\,(1 - e^{-t/\lambda})$ is thus:-

$$I_{x_{(p)}} = I_{(p)}\,A_{(p)}$$

$$= \frac{I}{S\lambda(R_1+R_2)}\left[\frac{C_3R_1(pT_2+1)-C_4R_2(pT_1+1)}{(p+1/\lambda)(p+1/S)}\right]\left[\frac{R_1}{T_1(p+1/T_1)}+\frac{R_2}{T_2(p+1/T_2)}\right]$$

$$= I\left[\frac{R_1(pT_2+1)+R_2(pT_1+1)}{T_1T_2\,\lambda S(R_1+R_2)}\right]\left[\frac{C_3R_1(pT_2+1)-C_4R_2(pT_1+1)}{(p+1/\lambda)(p+1/S)(p+1/T_1)(p+1/T_2)}\right]$$

Assuming $\lambda \ll T_1$, T_2, and S we obtain:-

$$I_{x_{(t)}} \doteq I\left[\frac{C_3R_1}{T_1}\left(e^{-t/T_1}-e^{-t/\lambda}\right)-\frac{C_4R_2}{T_2}\left(e^{-t/T_2}-e^{-t/\lambda}\right)\right]$$

$$\doteq I\left[\frac{C_3}{C_1}\,e^{-t/T_1}-\frac{C_4}{C_2}\,e^{-t/T_2}\right] \qquad \ldots\ldots (15)$$

Or, if the electrodes are similar so that

$R_1 \doteq R_2 = R$, $C_1 \doteq C_2 = C$, $T_1 \doteq T_2 = T$ then,

$$I_{x_{(t)}} \doteq I\left[\frac{C_3-C_4}{C}\right]e^{-t/T} \qquad \ldots\ldots (16)$$

Appendix V

Recording System Response

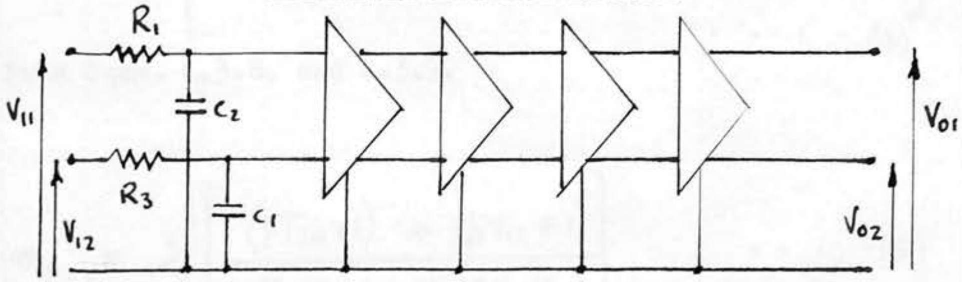

Fig. 1.

Consider a recording system consisting of an amplifier of four L.T.P. stages preceeded by an RC network representing the recording electrode and amplifier input impedances. (Fig. 1). Let the first stage gain be G_1, and those of the succeeding stages G. Let the time constants of the first stage anode loads be $\mathcal{T}_1$ and $\mathcal{T}_2$ where $\mathcal{T}_1 \doteqdot \mathcal{T}_2 = \mathcal{T}$
Let the time constant at the first stage cathode be T_K
Let the time constants associated with the anode loads of stages 2, 3 and 4 be all equal to T.
Let the time constants of the electrode resistances with the amplifier input capacitances be $R_1C_2 = T_{12}$ and $R_3C_4 = T_{34}$.

From Eqns. 4.3.4. and 4.3.5.

$$Md_{(p)} \doteqdot Md_{a_{(p)}} \cdot md_{(p)} \quad \cdot \cdot \cdot \cdot \cdot \ (1)$$

$$Mv_{(p)} \doteqdot Md_{a_{(p)}} mv_{(p)} + Mv_{a_{(p)}} md_{(p)} \cdots (2)$$

From Eqns. 4.3.1. and 4.3.2. and the results of Appendix II

$$Md_{a_{(p)}} = \frac{G_1}{\mathcal{T}(p+1/\mathcal{T})} \cdot \frac{G^3}{T^3(p+1/T)^3} \quad \cdot \cdot \cdot \cdot \cdot \ (3)$$

$$M_{v(a)_{(p)}} = \frac{G^3}{(pT+1)^3}\left[\frac{T_K(p+1/T_K)}{2gm\,R_K T_1 T_2}\left(\frac{gm_2 R_2(pT_1+1) - gm_1 R_1(pT_2+1)}{(p+1/T_1)(p+1/T_2)}\right) + \frac{(\mu_2-\mu_1)R}{r_a \mu (pT+1)}\right] \quad \cdots \quad (4)$$

From Eqns. 4.3.8. and 4.3.9.

$$m_{d_{(p)}} = \frac{1}{2}\left[\frac{(pT_{34}+1) + (pT_{12}+1)}{T_{12}T_{34}(p+1/T_{12})(p+1/T_{34})}\right] \quad \cdots \quad (5)$$

$$m_{v_{(p)}} = \frac{1}{2}\left[\frac{p(T_{34}-T_{12})}{T_{12}T_{34}(p+1/T_{12})(p+1/T_{34})}\right] \quad \cdots \quad (6)$$

Substituting results (3), (4), (5), and (6) in (1) and (2) and inserting the following typical values,

$(gm_2 R_2 - gm_1 R_1) = \frac{gmR}{10}$ and $gmR = 100 = G_1 = G$

$gm\,R_k \doteqdot 1{,}000$

$(u_2 - u_1) = \frac{\mu}{10}$ and $\mu \doteqdot 1{,}000$

$(T_{12} - T_{34}) = 0.1$ µSec.

$T = 10$ µSec.

$T_k = 5$ µSec.

Yields values for $M_{d_{(p)}}$ and $M_{v_{(p)}}$ involving errors of around 10% in amplitude.

$$M_{d_{(p)}} \doteqdot \frac{G_1 G^3}{T^3(p+1/T)^3} \quad \cdots \quad (7)$$

$$M_{v_{(p)}} \doteqdot \frac{G_1 G^3}{2}\left[\frac{T_{12}-T_{34}}{T}\right]\frac{p}{T^2(p+1/T)^2} \quad \cdots \quad (8)$$

The waveforms of the artefact components obtained in the example considered in Chapter 4.4. are given by the response of this system to differential and common mode input voltages of the form $E(1 - e^{-t/\lambda})$ and $Ee^{-t/\lambda}$ where λ, the rise time constant of the stimulator pulse is much less than T.

Thus the response to a differential mode input of the form $E(1 - e^{-t/\lambda})$ gives the waveform of the Differential Direct component as:-

$$EG_1G^3\left\{1 - e^{-t/T} + \tfrac{t}{T}e^{-t/T} - \left(\tfrac{t}{T}\right)^2 \frac{e^{-t/T}}{2}\right\}$$

The response to a common mode input of the form $E(1 - e^{-t/\lambda})$ gives the Common Direct component as:-

$$\frac{EG_1G^3}{2}\left(\frac{T_{12} - T_{34}}{T}\right)\left(\tfrac{t}{T}\right)^2 \frac{e^{-t/T}}{2}$$

The response to a differential mode input of the form $Ee^{-t/\lambda}$ gives the Differential Escape component

$$EG_1G^3 \frac{\lambda}{T}\left(\tfrac{t}{T}\right)^2 \frac{e^{-t/T}}{2}$$

The response to a common mode input of the form $Ee^{-t/\lambda}$ gives the Common Escape component

$$\frac{EG_1G^3}{2}\left(\frac{T_{12} - T_{34}}{T}\right)\left(\tfrac{t}{T}e^{-t/T} - \left(\tfrac{t}{T}\right)^2 \frac{e^{-t/T}}{2}\right)$$

Appendix VI

The High Rejection Ratio Amplifier

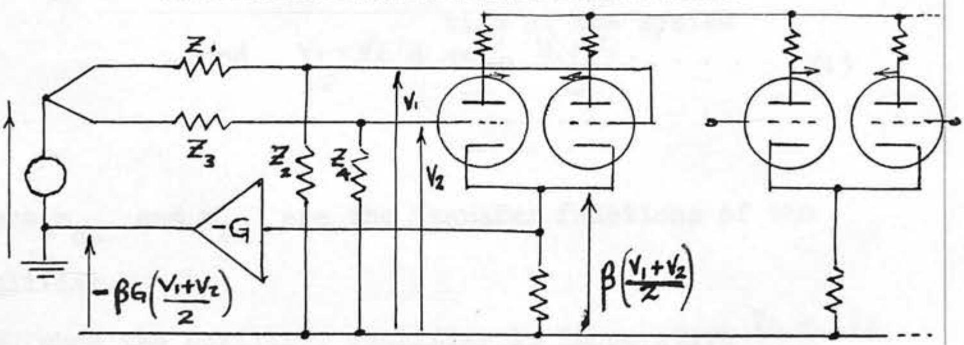

Fig. 1

Consider the floating amplifier of Fig. 1, incorporating an auxiliary amplifier of gain - G, the output of which is applied between the floating chassis and earth. Z_1 and Z_3 represent the recording electrode impedances and Z_2 and Z_4 the amplifier input impedances. A common mode input E is applied between the recording electrodes and earth. Let the grid voltages of the first L.T.P. stage in the amplifier be V_1 and V_2. As was shown in Appendix II, a potential proportional to the common mode component of these voltages - say $\beta \frac{V_1 + V_2}{2}$ where β is some factor approaching unity - appears at the cathode of this stage.

The response of the recording system to the common mode input E is given by:

$$\frac{V_{o1} - V_{o2}}{2} = M_v . E$$

where M_v is the overall Inversion Gain Transfer Function of the system

$$= m_{da} \frac{V_1 - V_2}{2} + m_{va} \frac{V_1 + V_2}{2} \quad \cdots \cdots \quad (1)$$

where m_{da} and m_{va} are the transfer functions of the amplifier.

Now, when the auxiliary amplifier is inoperative $\frac{V_1 - V_2}{2}$ and $\frac{V_1 + V_2}{2}$ are given simply by:-

$$\frac{V_1 - V_2}{2} = m_{vn} E$$

$$\frac{V_1 + V_2}{2} = m_{in} . E$$

where m_{vn} and m_{in} are the transfer functions of the input network Z_1, Z_2, Z_3 and Z_4.

So that the overall common mode response of the system is:-

$$\frac{V_{o1} - V_{o2}}{2} = \left[m_{da} m_{vn} + m_{va} m_{in} \right] E \quad \cdots \quad (2)$$

When the auxiliary amplifier is operating we have:-

$$\frac{V_1 + V_2}{2} = m_{in} \left[E - \beta G \frac{V_1 + V_2}{2} \right]$$

$$= \frac{m_{in} E}{1 + m_{in} \beta G} \quad \cdots \cdots \quad (3)$$

$$= \frac{m_{in} E}{K + 1} \quad \cdots \cdots \quad (4)$$

Where $K = m_{in} \beta G$.

= Gain round the servo amplifier loop.

and $$\frac{V_1 - V_2}{2} = m v_n\left[E - \beta G\,\frac{V_1+V_2}{2}\right]$$

$$= m v_n\left[E - \beta G\,\frac{m i_n E}{1+\beta G m i_n}\right]$$

$$= \frac{m v E}{1+\beta G m i_n}$$

$$= \frac{m v E}{K+1} \qquad - - - - - - (5)$$

Thus, from(1), the overall common mode response is:-

$$\frac{V_{01} - V_{02}}{2} = \left[\frac{m d_a\, m v_n + m v_a\, m i_n}{K+1}\right] E \cdot\cdot (6)$$

Consider now the effect of returning the amplifier input impedances Z_2 and Z_4 to the cathode of the first L.T.P. stage, as shown in Fig. 2, instead of to the amplifier chassis.

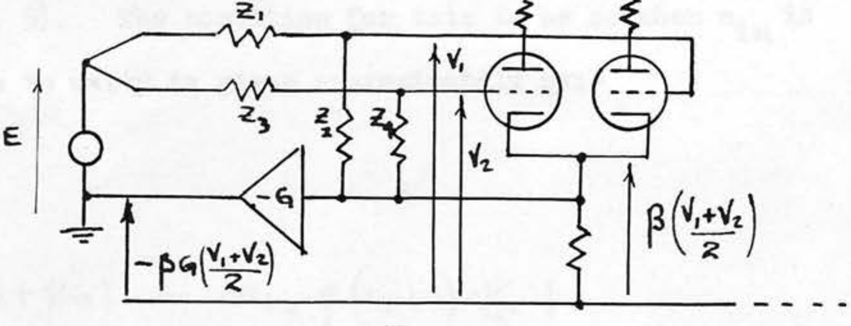

Fig. 2

Now
$$\frac{V_1+V_2}{2} = \beta\left(\frac{V_1+V_2}{2}\right) + m i_n\left[E - \beta G\,\frac{V_1+V_2}{2} - \beta\,\frac{V_1+V_2}{2}\right]$$

$$= \frac{m i_n E}{1+\beta G} \qquad \cdot\ \cdot\ \cdot\ \cdot\ \cdot\ (7)$$

and
$$\frac{V_1 - V_2}{2} = m v_n\left[E - \beta G\,\frac{V_1+V_2}{2} - \beta\,\frac{V_1+V_2}{2}\right]$$

$$= E m v_n\left[1 - \frac{\beta G m i_n}{1+\beta G} - \frac{\beta m i_n}{1+\beta G}\right] \text{ from (7)}$$

$$= m v_n E\left[\frac{1+\beta G - m i_n \beta(G+1)}{1+\beta G}\right] \cdot\cdot (8)$$

$$= m v E\left[\frac{1-\beta}{1+\beta G}\right] \quad \text{for } m i_n = 1 \cdot\cdot (9)$$

Comparing these results with those from the previous case, we see that where m_{in} is close to unity, as is usually the case,

$$\frac{V_1 + V_2}{2} = \frac{m_{in} E}{1 + m_{in}\beta G} \quad \cdots\cdots (3)$$

$$\doteq \frac{m_{in} E}{1 + \beta G} \quad \cdots\cdots (7)$$

$$\doteq \frac{m_{in} E}{K + 1} \quad \cdots\cdots (4)$$

So that the common mode input to the first L.T.P. stage in both cases is reduced by a factor of (K + 1). The Differential mode input to the first stage can, however, be much smaller in the second case (Eqn. 8) than in the first (Eqn. 5). The condition for this to be so when m_{in} is close to unity is given approximately by:-

$$(1 + \beta G) - m_{in}\beta(G + 1) \ll 1$$

$$\therefore \quad m_{in} > \frac{G}{G + 1} \quad \cdots\cdots (10)$$

This condition is easily satisfied in a typical case where, at the centre of the pass band, $m_{in} = (1 - 10^{-3})$, $G = 100, \beta = (1 - 2 \times 10^{-2})$. Then Eqn. 8 yields a differential mode component at the amplifier input only a tenth of that given by Eqn. 5.

If the overall common mode response of the system is due mainly to this component, the improvement in the overall common mode rejection obtained by returning the input impedances to the cathode of the first L.T.P. stage may be very significant.

Appendix VII

The Differential Attenuator

A. System Using Earth Electrode

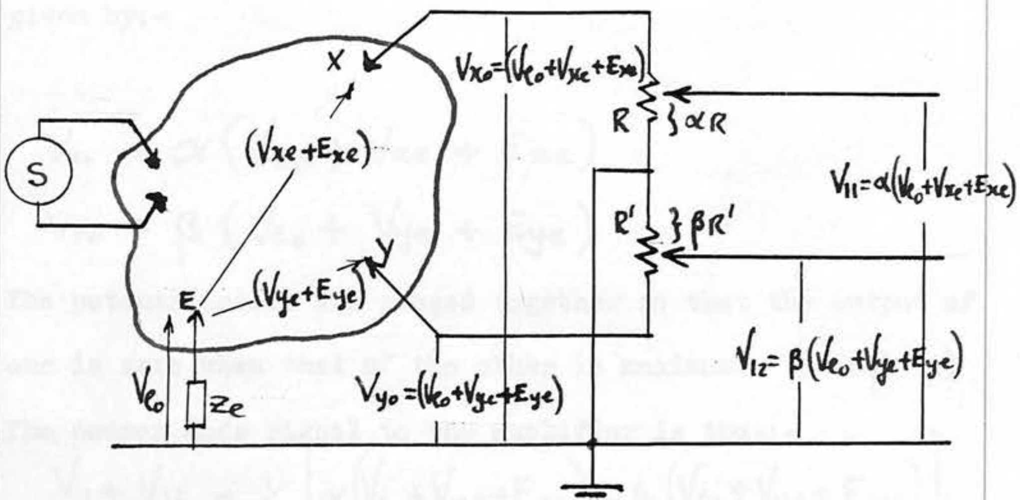

Fig. 1

Fig. 1 shows the preparation with the stimulator S and recording electrodes X and Y and earth electrode E.

Let the Direct artefact field in the preparation produce potentials E_{xe} and E_{ye} between electrodes X and E, and Y and E as shown.

Let the escape current produce a volts drop V_{eo} across the earth electrode impedance, and let the field in the preparation due to the escape current produce potentials V_{xe} and V_{ye} between the X and Y and earth electrodes.

Thus the potentials of the recording electrodes X and Y with respect to earth are:-

$$V_{xo} = (V_{eo} + V_{xe} + E_{xe})$$

$$V_{yo} = (V_{eo} + V_{ye} + E_{ye})$$

These potentials are applied across two potentiometers the sliders of which tap off fractions α and β of the potential drop across each potentiometer.

The sliders are connected to the inputs of a differential recording amplifier so that the amplifier input voltages are given by:-

$$V_{11} = \alpha\left(V_{eo} + V_{xe} + E_{xe}\right)$$
$$V_{12} = \beta\left(V_{eo} + V_{ye} + E_{ye}\right)$$

The potentiometers are ganged together so that the output of one is zero when that of the other is maximum. $(\alpha+\beta=1)$

The common mode signal to the amplifier is thus:-

$$\frac{V_{11}+V_{12}}{2} = \tfrac{1}{2}\left[\alpha\left(V_{eo}+V_{xe}+E_{xe}\right) + \beta\left(V_{eo}+V_{ye}+E_{ye}\right)\right]$$

$$= \tfrac{1}{2}(\alpha+\beta)V_{eo} + \tfrac{1}{2}\left[\alpha\left(V_{xe}+E_{xe}\right) + \beta\left(V_{ye}+E_{ye}\right)\right]$$

$$= \tfrac{1}{2}V_{eo} + \tfrac{1}{2}\left[\alpha\left(V_{xe}+E_{xe}\right) + \beta\left(V_{ye}+E_{ye}\right)\right] \quad \ldots\ldots (1)$$

Since $(\alpha+\beta)=1$.

The differential mode signal at the amplifier input is:-

$$\frac{V_{11}-V_{12}}{2} = \tfrac{1}{2}\left[\alpha\left(V_{eo}+V_{xe}+E_{xe}\right) - \beta\left(V_{eo}+V_{ye}+E_{ye}\right)\right] \quad \ldots\ldots (2)$$

Now, so long as the electrodes are arranged so that the earth electrode is not intermediate in potential with respect to the X and Y electrodes in the Direct field, then E_{xe} and E_{ye} will have the same sign, so that $\frac{E_{xe}}{E_{ye}} > 0$.

It is then possible to set the ganged potentiometers so that $\alpha E_{xe} = \beta E_{ye}$ and the differential input to the amplifier becomes:-

$$\frac{V_{11} - V_{12}}{2} = \tfrac{1}{2} V_{eo}(\alpha - \beta) + \tfrac{1}{2}(\alpha V_{xe} - \beta V_{ye}) \cdots (3)$$

There is then no differential signal at the amplifier input due to the direct artefact field. There remain, however, two components due to the escape field of which the first, $\frac{1}{2} V_{eo}(\alpha - \beta)$, may be considerable, unless $\alpha = \beta$, since V_{eo} is usually much larger than V_{xe} and V_{ye}.

The case $\alpha = \beta$ corresponds to a conventional differential recording system giving rejection of "In phase" or common mode signals. For other settings of the Differential Attenuator such that $\alpha \neq \beta$, the direct artefact component may be rejected but at the expense of degradation of the common mode rejection of the system. This may give rise to 'hum' artefact as well as to break through of the Common Escape artefact.

B. System Using an Extra Recording Electrode

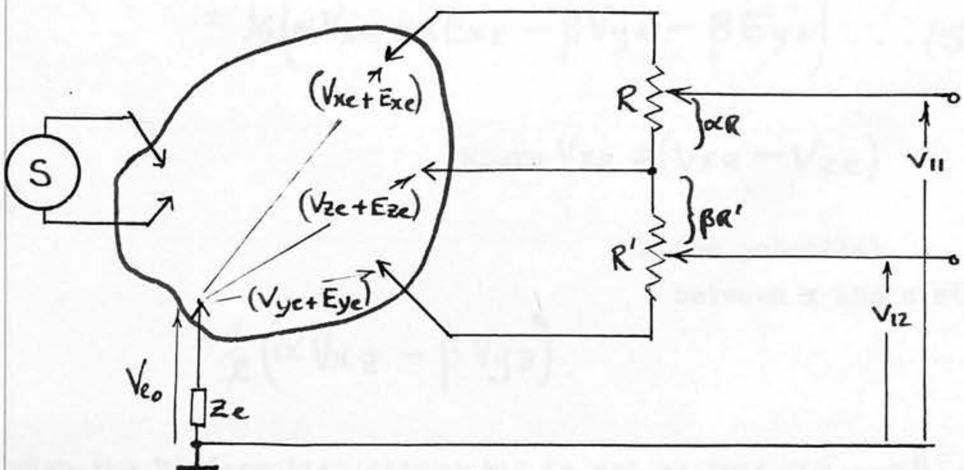

Fig. 2.

If, instead of returning the junction of the two potentiometers forming the Differential Attenuator to earth, we connect it to the preparation through a third recording electrode Z, we have the system shown in Fig. 2.

Now
$$V_{11} = \alpha(V_{eo}+V_{xe}+E_{xe}) + (1-\alpha)(V_{eo}+V_{ze}+E_{ze})$$
$$= V_{eo} + \alpha(V_{xe}+E_{xe}) + (1-\alpha)(V_{ze}+E_{ze})$$

and
$$V_{12} = \beta(V_{eo}+V_{ye}+E_{ye}) + (1-\beta)(V_{eo}+V_{ze}+E_{ze})$$
$$= V_{eo} + \beta(V_{ye}+E_{ye}) + (1-\beta)(V_{ze}+E_{ze})$$

The common mode input to the amplifier is then:-
$$\frac{V_{11}+V_{12}}{2} = \tfrac{1}{2}\Big[2V_{eo} + \alpha(V_{xe}+E_{xe}) + (1-\alpha)(V_{ze}+E_{ze}) + \beta(V_{ye}+E_{ye}) + (1-\beta)(V_{ze}+E_{ze})\Big]$$
$$= V_{eo} + \frac{\alpha}{2}(V_{xe}+E_{xe}) + \frac{\beta}{2}(V_{ye}+E_{ye}) - \frac{V_{ze}+E_{ze}}{2}$$

. . . . (4)

Since $(\alpha+\beta)=1$

The differential mode input to the amplifier is:-

$$\frac{V_{11}-V_{12}}{2} = \frac{1}{2}\left[\left(\alpha(V_{xe}+E_{xe}) + (1-\alpha)(V_{ze}+E_{ze})\right) - \left(\beta(V_{ye}+E_{ye}) + (1-\beta)(V_{ze}+E_{ze})\right)\right]$$

$$= \frac{1}{2}\left(\alpha V_{xz} + \alpha E_{xz} - \beta V_{yz} - \beta E_{yz}\right) \ldots (5)$$

Where $V_{xz} = (V_{xe} - V_{ze})$

= the potential between x and z etc.

$$= \frac{1}{2}\left(\alpha V_{xz} - \beta V_{yz}\right)$$

when the Differential Attenuator is set so that $\alpha E_{xz} = \beta E_{yz}$

From (5) it is seen that the differential mode input to the amplifier contains no component derived from V_{eo}, the potential common to all three recording electrodes. In addition, by suitable choice of $\frac{\alpha}{\beta}$, the component of the differential mode input signal due to the Direct artefact field can be cancelled, leaving only a residual signal due to the Escape component of the artefact.

Thus one selected field component in the preparation can be rejected from the recording system while retaining rejection of signals common to all three recording electrodes, such as 'hum' and escape voltages across the earth electrode impedance.

Appendix VIII

Floating to Grounded Amplifier Conversion

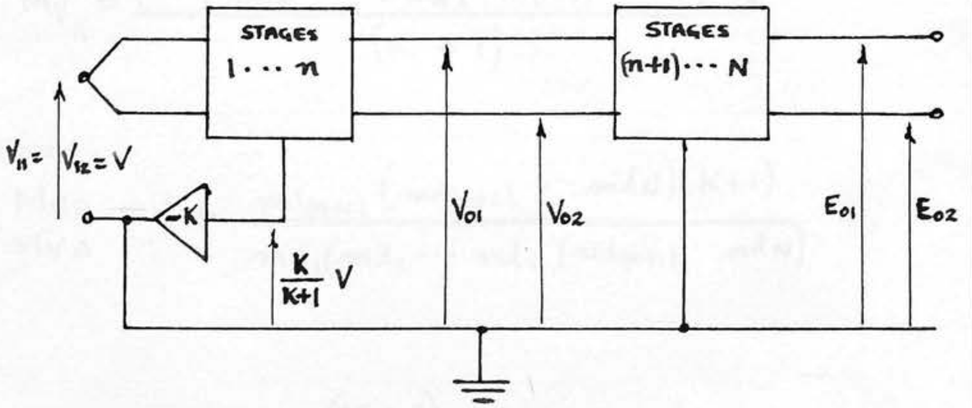

Consider an N stage amplifying system with the first n stages arranged as a floating amplifier driven by an auxiliary servo system with loop gain K, and the last (N -n) stages as a conventional differential amplifier.

We have:-

Overall

$$M_V = \left.\frac{\frac{E_{01}-E_{02}}{2}}{\frac{V_{11}+V_{12}}{2}}\right|_{V_{11}=V_{12}=V}$$

$$= \frac{1}{V}\left[\left(m_{d_{(n+1)}}\cdots m_{d_N}\right)\left(\frac{V_{01}-V_{02}}{2}\right) + m_{s_{(n+1)}}\left(m_{d_{(n+2)}}\cdots m_{d_N}\right)\left(\frac{V_{01}+V_{02}}{2}\right)\right]$$

where m_{d_r} is the differential gain of stage r, etc.

$$= \frac{1}{V}\left[\frac{m_{s_1} m_{d_2}\cdots m_{d_n}}{K+1}\left(m_{d_{(n+1)}}\cdots m_{d_N}\right)V + m_{s_{(n+1)}}\left(m_{d_{(n+2)}}\cdots m_{d_N}\right)\left(\frac{M_{i_1}}{K+1}V+\frac{K}{K+1}V\right)\right]$$

where M_{i_1} is the overall 'in phase gain' of the first n stages.

$$= \left[\frac{\left(m_{s_1} m_{d_2}\cdots m_{d_n}\right)}{K+1}\left(m_{d_{(n+1)}}\cdots m_{d_N}\right) + m_{s_{(n+1)}}\left(m_{d_{(n+2)}}\cdots m_{d_N}\right)\left(\frac{M_{i_1}}{K+1}+\frac{K}{K+1}\right)\right]$$

$$= \left[\frac{\left(m_{s_1} m_{d_2}\cdots m_{d_n}\right)}{K+1}\left(m_{d_{(n+1)}}\cdots m_{d_N}\right) + m_{s_{(n+1)}}\left(m_{d_{(n+2)}}\cdots m_{d_N}\right)\right] \quad \text{for } K \gg 1$$

$$= M_{V_B}\text{, say.}$$

For the whole N stages floating and driven by the servo amplifier, the overall M_v is given by:-

$$M_{V_A} = \frac{(mv_1\, md_2 \cdots md_n)(md_{(n+1)} \cdots md_N)}{(K+1)}$$

Hence

$$\frac{M_{V_B}}{M_{V_A}} = 1 + \frac{mv_{(n+1)}(md_{(n+2)} \cdots md_N)(K+1)}{mv_1(md_2 \cdots md_n)(md_{(n+1)} \cdots md_N)}$$

$$= 1 + \frac{(K+1)\, mv_{(n+1)}}{mv_1(md_2 \cdots md_{(n+1)})}$$

<u>Note</u> For splitting after the nth stage where

$m_{d_1} = m_{d_2} = \; = m_{d_{(n+1)}} = m_d$, and $m_{v_1} = m_{v_{(n+1)}}$

$$\frac{M_{V_B}}{M_{V_A}} = 1 + \frac{K+1}{md^n}$$

Which is very nearly unity for $(m_d)^n \gg (K+1)$

e.g. If $m_{v_{(n+1)}} = m_{v_1}$, $(n + 1) = 5$, $m_{d_1} = \; = m_{d_5} = 100$, $K = 100$.

then $\dfrac{M_{V_B}}{M_{V_A}} = 1 + 10^{-6}$