Approximate Procedures for Simulation and Synthesis of Nonideal Separation Systems

Teresa do Rosário Senos Matias

Thesis presented for Degree of Doctor of Philosophy
University of Edinburgh
1997

Declaration

I declare that this thesis was composed by myself and that it describes my own work except where specifically stated in the text. The work was carried out between June 1991 and September 1996 in the Department of Chemical Engineering at the University of Edinburgh under the supervision of Prof. J.W.Ponton.

Teresa R. S. Matias

Acknowledgements

I would like to thank all the people of the *ECOSSE* research group for their help and support. Special thanks are due to Eric Fraga for the interesting discussions and support on using CHiPS, to Neil Skilling and Geoff Ballinger for the computing support they have provided and to Rory McKinnel for the valuable team work in testing the final part of this work. Also many thanks to Professor Ponton for giving me the opportunity to do this work and for his support throughout. Finally I wish to thank my husband Murray, for his support and patience.

Abstract

Simulation and synthesis of nonideal separation systems is computationally intensive. The main reasons for this are the time used in the calculation of physical properties, which cannot be assumed constant throughout the calculation, and the elaborate methods required for the full rigorous simulation and design of distillation units.

The present work looks at two different ways of reducing computing time in steady state simulation and in synthesis of nonideal separation systems:

- Use of approximate models for physical property calculation.
- Use of 'shortcut' procedures, which are thermodynamically rigorous, in simulation and synthesis of nonideal distillation.

Approximate models are derived for the liquid activity coefficient and for relative volatilities within a simplified flash unit. Liquid activity coefficient models include a Margules-like equation generalised for a multicomponent mixture and other equations of the form of rational functions. They are tested with several nonideal ternary mixtures and it is shown how their behaviour changes across the ternary composition diagram.

The development of simplified flash units with approximate physical properties is done in a dual level flowsheeting environment. One level is used to solve the material balance assuming given fixed relative volatilities. The other level approximates the physical property values based on rigorous bubble point data obtained from a rigorous physical property package, using an 'ideal' correction to calculate the vapour liquid equilibrium conditions. It is shown how the two levels can be used in different arrangements, by converging them simultaneously or one within the other. The performance of the dual level flowsheeting arrangements is tested using the Cavett problem structure for several mixtures and compared against the conventional method where the flash is performed directly by the rigorous physical property package.

Finally a rigorous shortcut procedure has been developed for designing nonideal distillation processes. The procedure is based on a nonideal variation of Fenske equation with rigorous physical properties using an iterative method. The procedure is implemented in a package for automated synthesis incorporating heat integration. An example case is studied and the results obtained in the synthesis are compared with a full rigorous simulation of the same process. It is shown for the first time how a rigorous shortcut procedure can be used in synthesis to produce results that consider heat integration in the initial stages of design, within a reasonable amount of time.

Table of Contents

1. Introduction **1**

1.1 Motivation 1

1.2 Approximating Physical Properties 3

1.3 Using a Shortcut Procedure for Nonideal Distillation 6

1.4 Definitions 7

2. Approximate Methods for Modelling Nonideal System Separation **8**

2.1 Introduction 8

2.2 Thermodynamic Equilibrium 10

2.3 Rigorous Correlations for the Calculation of Activity Coefficients . 13

2.4 Implementation and Use of Local Models in Separation Processes . 14

2.5 Distillation of Nonideal Mixtures 28

2.6 Equilibrium Diagrams 30

2.7 Feasibility of Separation 37

2.8 Entrainer Selection 45

2.9 Synthesis of Nonideal Distillation 51

2.10 Summary 54

3. Local Approximations for Liquid Activity Coefficient Functions 58

3.1 Considerations on Choice of Approximate Models 60

3.2 Rigorous Physical Properties Calculation 61

3.3 Margules-like Models 63

3.3.1 Testing the Models 66

3.4 Wilson-like models 76

3.4.1 Testing the Models 78

3.5 Rational fraction approximation to activity coefficient in flash calculations 79

3.5.1 Testing the Model 80

3.6 Conclusions 86

4. Local Approximations for Flash Models in Flowsheet Solution 89

4.1 Isothermal Flash Calculation 91

4.2 Approaches for Flowsheet Solution 93

4.3 Flash Modules 97

4.4 Physical Property Calculations 99

4.5 Case Studies 100

4.5.1 The Cavett Problem 100

4.5.2 Results with the Original Cavett Problem 108

4.5.3 Results with a Mixture of Water, Methanol, Ethanol 116

4.5.4 Results with a Seven Component Nonideal Mixture 119

4.6 Conclusions 122

5. A Thermodynamically Rigorous Shortcut Procedure for Nonideal Distillation **126**

5.1 Infinite Reflux Calculation 128

5.2 Algorithm 133

5.2.1 Initial Estimate 134

5.2.2 Calculation of the Minimum Number of Stages 135

5.3 Azeotrope Detection 138

5.4 Calculation of Minimum Reflux Ratio 141

5.5 Calculation of the Number of Stages 146

5.6 Summary 147

6. Application to the Synthesis of Azeotropic Distillation **149**

6.1 Introduction to CHiPS 150

6.2 Adding the Shortcut Azeotropic Distillation Model with the Unit Model Interface 151

6.2.1 The Initialisation Group 151

6.2.2 The Design Group 153

6.3 Physical Data 155

6.4 Cost Function 156

6.5 Entrainer Selection and Feasibility 157

6.6 Case Studies 157

6.6.1 Analysis of Example Mixture 157

6.6.2 Model Structure 164

6.6.3 Low Recovery Example 164

6.6.4 High Recovery Example 169

6.6.5 Comparison of Performance Against a Full Rigorous Model 174

6.7 Conclusions 175

7. Conclusions **177**

7.1 Approximate Procedures 178

7.1.1 Physical Property Calculation 178

7.1.2 Rigorous Shortcut Procedure for Nonideal Distillation 180

7.2 Future Directions 181

A. Bibliography **182**

Bibliography **190**

B. Implementation of the Structural Evolution Method **191**

B.1 Application to the Cavett Problem 191

List of Figures

2.1 Diagram of a distillation column. 32

2.2 Residue curves and distillation lines in the ternary equilibrium diagram. 33

2.3 Types of singular points. 35

2.4 Example of a ternary mixture with a distillation boundary. 36

2.5 Separation of a ternary mixture in a three column sequence. 39

2.6 Example of locally indeterminate system as published by Foucher *et al.* 42

2.7 Identifying feasible products in nonideal ternary mixtures. 44

3.1 Variation in the parameter value of component 1 along the composition diagram for Mixture 1 with first Margules-like equation . . . 69

3.2 Variation in the parameter value of component 2 along the composition diagram for Mixture 1 with first Margules-like equation . . . 70

3.3 Variation in the parameter value of component 3 along the composition diagram for Mixture 1 with first Margules-like equation . . . 71

3.4 Variation in the parameter value of component 1 along the composition diagram for Mixture 1 with second Margules-like equation . . 73

3.5 Variation in the parameter value of component 2 along the composition diagram for Mixture 1 with second Margules-like equation . . 74

3.6 Variation in the parameter value of component 3 along the composition diagram for Mixture 1 with second Margules-like equation . . 75

3.7 Relative error in activity coefficient for component 1 in mixture 2 along the composition diagram 81

3.8 Relative error in activity coeffcient for component 2 in mixture 2 along the composition diagram 82

3.9 Relative error in activity coeffcient for component 3 in mixture 2 along the composition diagram 83

3.10 Ternary diagram division into four areas for parameter fitting . . . 85

4.1 Structural evolution method diagram. 96

4.2 Simple flowsheet diagram of flash with recycle. 99

4.3 Cavett Problem. 102

4.4 Recycle configuration using streams 6, 9 and 11 103

4.5 Recycle configuration using streams 3 and 11 103

4.6 Recycle configuration using streams 3 and 10 104

4.7 Recycle configuration using streams 3 and 8 104

4.8 Recycle configuration using streams 4 and 8 105

4.9 Convergence of the Cavett Problem using the conventional method and Redlich Kwong Soave. 112

4.10 Convergence of the Cavett Problem using the conventional method and Peng Robinson. 112

4.11 Convergence of the Cavett Problem using the conventional method and Redlich Kwong Soave (API). 113

4.12 Convergence of the Cavett Problem using the parallel method and Redlich Kwong Soave. 113

4.13 Convergence of the Cavett Problem using the parallel method and Peng Robinson. 114

4.14 Convergence of the Cavett Problem using the parallel method and Redlich Kwong Soave (API). 114

4.15 Iteration of the Cavett Problem using the inside-out method and Redlich Kwong Soave. 115

4.16 Convergence of the three component system using the parallel method. 119

5.1 Structure of rigorous shortcut procedure. 129

5.2 Bubble and dew point curves of a mixture of acetone and chloroform showing a maximum boiling azeotrope at 100 kPa. 139

6.1 Equilibrium diagram for a mixture of acetone, chloroform and benzene at 100 kPa. 158

6.2 Direct split of a mixture of acetone, chloroform and benzene in a two column structure. 160

6.3 Direct/Indirect split of a mixture of acetone, chloroform and benzene in a three column structure. 161

6.4 Indirect split leading to infeasible separation of a mixture of acetone, chloroform and benzene. 162

6.5 Intermediate split structure for separation of a mixture of acetone, chloroform and benzene. 163

6.6 Separation of acetone, chloroform and benzene at low recovery in a two column structure with no heat integration 166

6.7 Separation of acetone, chloroform and benzene at low recovery in a two column structure with heat integration 167

6.8 CHiPS heat integrated structure for the two column structure example 168

6.9 Separation of acetone, chloroform and benzene at high recovery in a two column structure with no heat integration 170

6.10 Separation of acetone, chloroform and benzene at high recovery in a two column structure with heat integration 171

6.11 Full rigorous simulation of the separation of acetone, chloroform and benzene at high recovery in a two column structure with no heat integration 173

B.1 First stage of structural evolution 192

B.2 Second stage of structural evolution 193

B.3 Third stage of structural evolution 194

List of Tables

2.1 Types of single-stage vapour-liquid adiabatic flash 18

3.1 Sample nonideal ternary mixtures with data at 100 kPa. 67

3.2 First fitting set of molar composition points for each ternary mixture. 80

3.3 Second fitting set of molar composition points for each ternary mixture. 84

3.4 Third fitting set of molar composition points for each ternary mixture including 4 subsets. 85

4.1 Data and solution for the Cavett Problem from Rosen and Pauls. . 106

4.2 Data and solution for the Cavett Problem obtained by both the conventional and parallel methods. 109

4.3 Number of iterations for the Cavett Problem using the conventional and parallel methods. 110

4.4 Number of iterations taken by the structural evolution method coupled with the conventional and parallel methods. 117

4.5 Data and solution for the 3 component mixture Cavett Problem obtained by all methods using Wilson data. 118

4.6 Data and solution for the 7 component mixture Cavett Problem obtained by all methods using Wilson data. 120

4.7 Number of iterations for the Nonideal Cavett Problem using conventional and the parallel methods. 121

4.8 Number of iterations required by the inside-out method 121

6.1 Variables that can be set in the shortcut azeotropic distillation model. 152

6.2 Feed composition and Boiling temperature of singular points in the system acetone, chloroform and benzene at 100 kPa 159

6.3 Operating parameters for the two column heat integrated sequence. 169

6.4 Results of the synthesis of the high recovery case. 172

Chapter 1

Introduction

1.1 Motivation

The computation time required for simulation of nonideal separations has been a subject of research for many years. Even with today's much faster computers the problem remains the simulation requires significant time.

The most time consuming activities in the simulation of nonideal separations are:

- The calculation of physical properties, which can not be assumed constant throughout.
- The methods involved in the full rigorous simulation of the separation process.

Reasons for this are:

- The interaction between components, leading to the physical properties changing not only with temperature and pressure but also with composition. This increases the number of variables for which physical property equations must be solved.
- The lack of shortcut procedures for distillation of nonideal mixtures.

The majority of processes of practical interest include nonideal mixtures. Such processes require recalculation of physical properties every time conditions change in order to maintain accuracy. This is a time consuming activity. It is estimated that between 50% and 90% of the simulation time is normally spent estimating physical properties [1] [2] [3] [4] [5]. The time required depends on how nonideal and complex the components involved in the mixture are. The problem is greater when synthesis is considered. In the synthesis of chemical processes, particularly one involving nonideal distillation, a large number of alternatives can be considered to accomplish the same goal [6]. This coupled with the complexity of a rigorous simulation model makes synthesis of nonideal distillation a difficult and lengthy process.

Hence it is desirable to develop efficient ways of reducing computing time. This has led in the past to the development of local physical property calculations using simplified functions, which are then combined with an updating procedure in order to maintain accuracy of the results.

There is a need for reliable simplified procedures that will cut down computing time without compromising the validity of the solution. Such a goal can be achieved in two different ways:

- Using approximate models to calculate physical properties.

- Using shortcut procedures in simulation and synthesis of such processes. Such procedures could be in the form of equations to calculate design variables for nonideal distillation, avoiding full rigorous simulation of the column.

The present work explores both ways of achieving this goal. It provides new approximate models to calculate activity coefficients of multicomponent mixtures. It also studies different kinds of dual level flowsheeting structures that use simplified units by approximating physical property calculation. Their performance is compared in steady state simulation against the conventional solving method.

Finally, the experience gained in the early stages of this work regarding physical property behaviour is used to develop a new shortcut procedure for distillation of nonideal mixtures.

1.2 Approximating Physical Properties

Approximate models are simplified functions that make use of assumptions and have a set of local parameters. They should be independent of the thermodynamic package and process models used. They should also be easy to fit, using a reduced set of states, and they should accelerate calculations while maintaining accuracy. These features will reduce computing time in property calculation but have inherently only localised applicability requiring in general some kind of parameter update. Thus it is important that they mimic well the physical behaviour within a specified area of validity. The parameter updating procedure must be efficient in order to obtain the savings in computing time while maintaining the accuracy of the physical property values. In the case of nonideal mixtures dependence of physical properties on composition must be considered, due to the strong interaction between components. This increases the complexity of the functions used and, hence, of parameter fitting.

Simplified models should be physically based equations which have a reduced set of parameters and can be analytically differentiated. These characteristics will provide good extrapolation properties, low overhead for updating and fast initialisation.

Once a decision has been made on the local model structure its parameters must be initialised using a set of rigorous physical properties. Some fitting method, such as least squares, can be used to fit the parameters. Alternatively, if the function is linear in its parameters and a number of explicit equations exists, the system of equations may be solved exactly.

As simplified models are by nature approximate functions, errors increase as conditions change from the point where they were fitted. The functions must be therefore used in a dual level environment. A validation criterion determines when control of the calculation should pass on to the other level where re-evaluation of the parameters is performed. Hence it is necessary to have a measurement of the error or to define intervals of validity for the fitted local models. When the limiting condition for the error is exceeded, the local model parameters must be updated. The update interval may be a composition area, a change in working conditions, a preset number of calculations or, in the case of dynamic simulation, a calculated time. In steady state simulation an efficient updating interval is harder to define. The iteration procedure is not as smooth as with the expected changes in operating conditions during dynamic simulation.

The updating criterion must be carefully chosen. Examples of updating intervals used in the past are

- Function evaluation intervals.
- Time intervals.
- Predefined regions of validity, e.g. composition regions.
- Interval defined by an error model.

The first issue to consider is the choice of the physical property to approximate. For nonideal vapour liquid separation it is common to choose the liquid activity coefficient, since nonideal behaviour is present mostly in the liquid phase. Approximate functions must provide nonlinearity and good degree of interaction between components to be adequate for the kind of mixtures studied in this work. According to the type of function chosen, it will be necessary to establish its validity boundaries by one of the methods described above. The method's suitability

depends on the type of function and calculation required, i.e. steady-state or dynamic. The present work considers steady-state only, as its main objective is to look at steady-state simulation and synthesis.

A step further in approximate methods is the use of simplified unit models. The physical property package is used only to perform a bubble or dew point calculation and the components' relative volatilities are calculated locally. The units are then used in a dual level flowsheeting environment. One level of calculation is used to solve the flowsheet material balance assuming constant physical properties in the units. The other level updates the physical properties using the bubble or dew point calculation from the rigorous physical property package. Once both levels have converged simultaneously the calculation is completed. In this case the physical properties are recalculated always for the latest values of composition. Moving between levels can be done in various ways:

- Both levels can be used in parallel by constantly swapping between levels until convergence is achieved.

- The two levels can be converged one inside the other, using an inside-out procedure. The inside level will iterate on the material balance until it converges and the outside level recalculates physical properties for the newly converged values of composition.

Such arrangements are particularly suitable for flowsheets containing simpler units, such as flash units, mixers and splitters, where changes in physical properties do not have as great an effect as with, for instance, more complex distillation processes. They prove not to be as effective in steady state simulation of more complex nonideal systems and their limitations are used as a stepping stone to the development of a shortcut procedure for distillation of nonideal mixtures.

1.3 Using a Shortcut Procedure for Nonideal Distillation

In its simplest form a distillation column can be viewed as a series of flash vessels with recycles. The Cavett problem structure described in chapter 4 is an example of this. In this structure the change in physical properties during iteration greatly affects the separation and physical properties in the nearby stages. Hence convergence becomes more difficult due to interdependency. Complexity and computing time increase considerably since, in the rigorous simulation of a distillation column, a rigorous physical property package must be called for each stage and also for the condenser and reboiler. The liquid vapour ratio specified and degree of nonideal behaviour of the mixture significantly affect the computing time required in design.

Shortcut calculations are a valuable tool for the initial stages of design, as discussed by Douglas [6]. However little work is available in this area for nonideal distillation. This fact is due, in part, to the lack of knowledge on the behaviour of nonideal mixtures and the complexity of their physical properties. Well established correlations used for ideal mixtures in the calculation of design variables such as number of stages [7] [8] and minimum reflux ratio [9] are no longer valid in the case of nonideal mixtures because they assume constant relative volatility across the column. Hence it is desirable to develop similar correlations and algorithms that can be applied to nonideal mixtures, suitable for the initial stages of design.

Effective nonideal separation design considerably depends on accurate physical properties. Errors in their calculation may cause the overall calculation to fail, as discussed by Laroche *et al.* [10]. However a shortcut procedure can be used in conjunction with simplified models for the calculation of physical properties, provided the models are robust and accurate for the problem in question.

The core of the shortcut procedure described in this work is a modified Fenske equation, adapted to nonideal systems, that calculates the minimum number of stages taking into account changes in physical properties across the column. The solution of this equation is obtained via an iterative calculation of a column operating at infinite reflux.

1.4 Definitions

Local Physical Properties: Physical properties calculated by simplified functions used locally in the solution of a flowsheet. The parameters used in these functions are usually fitted using rigorous physical property data.

Rigorous Physical Property Package: Software package used to calculate rigorous physical properties.

Rigorous Physical Properties: Physical properties calculated using a physical property database or experimental data.

VLE Method: Method for calculation of vapour liquid equilibrium.

Rigorous Full Simulation: A simulation performed using a detailed method, e.g. tray by tray calculation in the simulation of a distillation column. Rigorous physical properties are used for each tray.

Rigorous Shortcut Procedure: A procedure using correlations to calculate the design variables for a unit, such as a distillation column, using rigorous physical properties.

Chapter 2

Approximate Methods for Modelling Nonideal System Separation

2.1 Introduction

This chapter reviews research by other authors on nonideal mixtures' separation. It includes the development of approximate functions to calculate physical properties and a review of the factors that influence a mixture's behaviour and must be taken into consideration in the synthesis of nonideal distillation.

Interest in simulation and synthesis of nonideal separation systems has grown considerably in the recent past. The phase separation behaviour of nonideal mixtures and its influence on their separation into the pure components has received detailed attention.

In nonideal mixtures one cannot ignore the variation of the components' physical properties with the mixture composition. Thus the assumption of constant physical properties used for ideal mixtures is no longer valid. During simulation the calculation of physical properties is done, conventionally, by a rigorous physical property package using well established VLE methods and containing the relevant parameters for each component in the mixture. The physical property package must be called a considerable number of times, which depends on the complexity of the mixture behaviour and number of operations required. The calculation of

physical properties is a computationally intensive step and efforts have been made in the past to reduce the amount of time it requires.

There are two ways of reducing computation time; using approximate functions for physical properties or using shortcut models that have a reduced number of calls to the rigorous package. A great part of the work done to date considers the first option, although some work has also investigated the approximation of calculations such as dew and bubble point, as well as flash and simple distillation units.

Early work considered simple functions for physical properties, such as liquid activity coefficient and equilibrium constants. In most cases the functions derived are only applicable to mixtures that do not deviate considerably from ideal behaviour. Later work used more complex functions in conjunction with an updating procedure to maintain accuracy as conditions change. These functions are normally used in a dual level environment. The function parameters are updated in one level using the rigorous physical property package. The other level uses a local physical property model to solve the flowsheet until the boundaries of validity are exceeded.

Most work has been developed for use in dynamic simulation. Variations expected in dynamic simulation are usually smooth, resulting from relatively small changes in the operating conditions from time step to time step. Hence they are easier to follow making it more straightforward to develop an updating procedure, e.g. time related. However some work has also been carried out for steady state simulation.

In order to approximate whole units, particularly in the synthesis of nonideal distillation, it is important to understand the physical behaviour for given operating conditions. In recent years research has moved into this area with the aim of developing effective tools for simulation and synthesis of nonideal distillation. Important issues, such as separation feasibility and selection of entrainers have

been addressed. Different approaches have been taken. One of the main issues has remained the considerable amount of time required in the calculations combined with a still incomplete picture of the total area of feasible products and of sequencing alternatives for distillation of nonideal mixtures.

2.2 Thermodynamic Equilibrium

For a vapour liquid mixture of n_c components at thermodynamic equilibrium the fugacity of each component is equal between the vapour and liquid phases, i.e.

$$f_i^V = f_i^L \qquad i = 1, ..., n_c \tag{2.1}$$

where V and L relate to the vapour and liquid phases, respectively and f_i is the fugacity of component i. In practice it is important to be able to relate fugacity to readily measured process variables such as composition, pressure and temperature. The component vapour fugacity is related to composition and operating conditions through the definition of fugacity coefficient, ϕ, i.e.

$$\phi_i = \frac{f_i^V}{y_i P} \tag{2.2}$$

where y_i is the vapour mole fraction of component i and P the system pressure. The fugacity coefficient has a value of 1 for ideal mixtures. For nonideal mixtures it is related to temperature, pressure and composition by an equation of state.

The component liquid fugacity is related to the liquid phase composition through the activity coefficient γ_i,

$$\gamma_i = \frac{f_i^L}{x_i f_i^o} \tag{2.3}$$

where x_i is the liquid mole fraction of component i and the standard state fugacity of the pure liquid, f_i^o, at the mixture's temperature and pressure is given by:

$$f_i^o\left(T,P\right) = P_{vp,i}\phi_i^S exp\left[\int_{P_{vp,i}}^{P} \frac{V_i^L}{RT} dP\right] \tag{2.4}$$

where $P_{vp,i}$ is the vapour pressure for component i and the fugacity coefficient ϕ_i^S is calculated under saturation conditions from vapour phase volumetric data. The molar liquid volume of component i is given by V_i^L and is a function of pressure.

Equation 2.1 gives the fundamental relation for vapour liquid equilibrium. Replacing equations 2.2 and 2.3 in equation 2.1 gives:

$$\phi_i y_i P = \gamma_i x_i f_i^o \qquad i = 1, ..., n_c \tag{2.5}$$

Replacing equation 2.4 in equation 2.5 gives:

$$y_i P = \gamma_i x_i P_{vp,i} \mathcal{F}_i \qquad i = 1, ..., n_c \tag{2.6}$$

where

$$\mathcal{F}_i = \frac{\phi_i^S}{\phi_i} exp\left[\int_{P_{vp,i}}^{P} \frac{V_i^L}{RT} dP\right] \tag{2.7}$$

For sub-critical components the correction factor $\mathcal{F}_i$ has a value close to unity when total pressure is sufficiently low or even moderate [11]. Furthermore equation 2.6 reduces to Raoult's Law assuming $\gamma_i = 1$, i.e. an ideal mixture. Considering that working conditions are such that $\mathcal{F}_i = 1$, the component equilibrium constants, k_i, can be defined as the ratio between component i vapour and liquid molar compositions at equilibrium:

$$k_i = \frac{y_i}{x_i} = \frac{\gamma_i P_{vp,i}}{P} \tag{2.8}$$

Dependency of the activity coefficient on pressure is normally small since it is given by

$$\left(\frac{\partial \ln \gamma_i}{\partial P}\right)_{T,x} = \frac{V_i^L - V_i^{L*}}{RT} \tag{2.9}$$

where V_i^{L*} is the molar volume of pure liquid i, R the universal gas constant and T the temperature. The relationship in equation 2.9 can lead to great variation when high pressures are considered, especially in the critical region, but it is reasonable to assume it is constant for most cases as noted by Reid *et al.* [11].

The activity coefficient can be related to the Gibbs free energy, g^E. If the Gibbs free energy is known as a function of composition the activity coefficient can be determined by:

$$RT \ln \gamma_i = \left(\frac{\partial g^E}{\partial x_i}\right)_{T,P,x_j} \qquad i = 1, ..., n_c \tag{2.10}$$

where x_i is the mole fraction of component i and x_j is the mole fraction of other components $j \neq i$. Therefore equations 2.8 and 2.10 provide the necessary information to calculate the equilibrium constants, k_i, for the working conditions taking the mixture composition into account.

2.3 Rigorous Correlations for the Calculation of Activity Coefficients

Methods have been developed in the past that can be used to predict the activity coefficient of each component for a given mixture as a function of composition, for given temperature and pressure. Reid *et al.* [11] list a series of VLE correlations for this purpose. In general the complexity of the equations increases with number of components. But, most importantly, their validity depends on the kind of components in the mixture and on the operating conditions.

The liquid activity coefficient is represented by a function of the form of equation 2.10. In order to solve this equation a suitable function of composition must be found for the Gibbs free energy. The function parameters are usually calculated at some known conditions and, in the case of nonideal behaviour, a change in those conditions may invalidate the function's applicability if the parameters are not updated.

There are published VLE methods [12] of greater or lesser complexity that can be used with different kinds of mixtures. The simplest equations are of empirical nature, such as Margules and Van Laar. These are relatively simple functions to use for binary mixtures, preferably with nonpolar liquids, but empirically they have been found to perform well also for more complex mixtures. The Margules equation is slightly more complex and reliable than Van Laar. Other empirical equations have been developed by Redlich-Kwong and Peng-Robinson, as modifications of the Van der Waals equation of state. Their parameters have some physical significance.

Wilson developed a correlation based on molecular considerations and local composition. Renon extended Wilson's work to develop the NRTL equation which has the advantage that it can be used also for mixtures exhibiting immiscibility.

The Wilson equation can be used only where there is a single liquid phase, so if a mixture exhibits a liquid phase split one must ensure that the calculations are performed outside of that exclusion area. The Wilson equation is mathematically simpler than NRTL, having only two parameters as opposed to three for NRTL.

The UNIQUAC method has a stronger physical basis than the previous correlations. It consists of two parts. The first is a combinatorial part depending on composition as well as the size and the shape of the molecules. The second part is called residual part and considers intermolecular forces. Subsequently, as more data were available and collected into databases, group contribution methods were developed, such as ASOG, UNIFAC and modifications thereof [12] [13].

Complex VLE methods may be used with more confidence in difficult mixtures, i.e. strongly nonideal mixtures but they also have a higher price in terms of computing time. This provides justification for using local models for physical property calculation.

2.4 Implementation and Use of Local Models in Separation Processes

An example of early work in the use of simplified calculations for separation processes is the work of Hutchison and Shewchuk [14]. They developed a method for linearising the equilibrium and enthalpy relationships in a distillation column. Rigorous physical properties were used throughout the calculation but the method assumes the relative volatilities are locally constant to obtain a linearised set of equations used in steady state solution of the distillation column. The set of equations thus obtained is sparse in most cases. The results obtained by Hutchison and Shewchuk [14] were encouraging in that acceleration in convergence of the steady state solution was obtained in the examples studied. Subsequently more work was

developed in creating simplified functions for equilibrium constants and activity coefficients making use of the rigorous property package only for updating.

Leesley and Heyen [1] implemented an independent procedure to calculate the equilibrium constants locally as a function of temperature and pressure only. Dependence on composition was not considered because this was not required for the mixtures studied. Their results are therefore only applicable to near ideal mixtures. They defined a standard state for zero pressure at the system's temperature and limited their study to a low pressure range. The resulting function is:

$$\ln k_i = A_i \ln P_{vp,r} + B_i - \ln P \qquad i = 1, ..., n_c \tag{2.11}$$

for a mixture of n_c components where $P_{vp,r}$ is the known vapour pressure of a reference component, P and T are the system's pressure and temperature. A_i and B_i are parameters for component i, which can be initially estimated from two rigorous sets of values (k_i, P, T) provided by a rigorous physical property database. Equation 2.11 performs well only over a temperature range of 50-100°C and for pressures lower than 200-300 kPa. A third parameter, C_i, was included to account for higher pressures as shown below

$$\ln k_i = A_i \ln P_{vp,r} + B_i + C_i \ln P \qquad i = 1, ..., n_c \tag{2.12}$$

The application of equations 2.11 and 2.12 above is also restricted to operating pressures that do not differ from the reference pressure by more than 30-50%. There is no updating procedure. Interpolation was used instead to obtain the equilibrium constants at different pressures and temperatures. Since there is no physical basis for parameter update, this procedure may result in inaccurate values in some instances. However for the near ideal mixtures considered, the error

obtained was generally smaller than 5% and to eliminate it a final calculation is done using the rigorous physical property package.

Barrett [15] used approximate functions, or simple global models, as he called them, for the calculation of physical properties. The subroutines created were put together in a package called TPIF and interact with a rigorous physical property database PPDS [16], using its data to fit Antoine-like functions, which are easily differentiable. The system can then be converged using the Newton-Raphson method since the Jacobian can be easily calculated. The best performing models were those with some physical meaning and of order greater than one.

Barret and Walsh [17] extended the work of Leesley and Heyen [1] to nonideal mixtures. They used local models to calculate the liquid phase activity coefficient instead of calculating equilibrium constants. Such a procedure accounts for composition dependence.

The regular solution model for liquid phase activity is given by

$$\ln \gamma_i = \frac{1}{T} \sum_{j=1}^{n_c} \left((A_{ij} + A_{ji})\, x_j - \sum_{k=1}^{n_c} x_k A_{kj} x_j \right) \qquad i = 1, ..., n_c \tag{2.13}$$

Barret and Walsh [17] modified equation 2.13 to give a model with better temperature dependence, viz.

$$\ln \gamma_i = B_i + \frac{1}{T} \sum_{j=1}^{n_c} \left(2A_{ij} x_j - \sum_{k=1}^{n_c} x_k A_{kj} x_j \right) \qquad i = 1, ..., n_c \tag{2.14}$$

Equation 2.14, however, gives poor composition dependence at points far from the fitting point. Hence a temperature and composition interaction term was included in the error bounds to counteract it. Each pressure and temperature region was treated as a different thermodynamic state. Each region has associated a set of local model parameters and a set of coefficients to an approximated error model. The error function used is a Taylor series expansion around the difference

between local and rigorous model functions. They assumed the error would be first or second order based on dividing the space into different thermodynamic states limited by temperature, pressure and composition bounds. This reduces cross dependencies, which cannot be ignored for nonideal mixtures. Thus the total error incurred is greater than that actually calculated by their method.

The method works well, giving good accuracy with nonideal mixtures but, unfortunately, computing and updating parameters for activity coefficients are time consuming, taking longer than would have been saved by using simpler models. Also considerable storage space was required, since the error model parameters also had to be stored.

Boston and Britt [18] applied the local model approach to a flash unit instead of just approximating the physical properties. They developed an algorithm using local models for physical property calculation in an adiabatic flash model. They called this algorithm an 'inside-out' approach. The term 'inside-out' is derived from converging the physical properties in the outer iteration as opposed to the more conventional method of converging the physical properties within the material balance. Their main concern was to find equations whose parameters do not depend strongly on the variables that remain constant in each level. In this case the variables are the physical properties. This procedure enables a faster convergence in each level and an easier parameter update since the Jacobian becomes a diagonally dominant matrix. However, not having interdependent terms means there is little interaction between temperature and composition, which is not acceptable for strong nonideal mixtures. One other disadvantage is that storage requirements for the Jacobian matrix grow in proportion to the square of the total number of parameters, making the method impractical for large systems. Hence they also studied convergence methods such as direct substitution and the Wegstein acceleration method. Direct substitution converges slowly to the solution whereas Wegstein acceleration performs poorly particularly when strongly nonideal mixtures are used. The difficulties encountered in the convergence are

due to the method being based on the assumption that autocorrelation of the variables is strong when compared to cross-correlation. However cross-correlation is very important for nonideal mixtures.

The algorithm also requires that the inlet variables be prespecified. Feed composition, flow and enthalpy are specified and output compositions and liquid flow are calculated. Given the number of degrees of freedom, two other quantities must be specified giving the six common types of single-stage flash problem listed in table 2.1. A different modification of the base algorithm is needed for each flash type.

Flash type	Specified Quantities	Calculated quantities
I	Heat flow and Pressure	Vapour flow and Temperature
II	Heat flow and Temperature	Vapour flow and Pressure
III	Heat and Vapour flows	Temperature and Pressure
IV	Vapour flow and Temperature	Heat flow and Pressure
V	Vapour flow and Pressure	Heat flow and Temperature
VI	Temperature and Pressure	Heat and Vapour flows

Table 2.1: Types of single-stage vapour-liquid adiabatic flash

With such an algorithm it is not possible to estimate errors. The calculation moves from the inner loop to the outer loop when the material balance has converged, then the physical property functions are re-evaluated and checked for convergence.

The work from Boston and Britt [18] was later extended by Boston [19] who included a composition dependent term in the equilibrium constant local model. Such a term is of the form of a pseudo-activity coefficient, which is a linear function of composition. As a result two additional parameters must be considered. They are computed by a perturbation in the rigorous activity coefficients calculation. Boston's main objectives were to keep the update numerically stable and to make it

computationally inexpensive through efficient storage and minimisation of rigorous evaluations. In order to keep the computing load down only one parameter is updated in each iteration, while the other is kept constant. The resulting algorithm proved to be more robust for nonideal mixtures when composition dependence was included, as would be expected.

Following these initial steps on the use of local models for evaluation of thermodynamic properties, a series of papers was published by Chimowitz *et al.* [20] [21] [22] describing a method called P-DELTA, *Process Design by Limiting Thermodynamic Approximations.* They established several local nonlinear models for the equilibrium constants starting from the liquid phase activity coefficient equations in order to obtain composition dependent models. They based their study on the same equation for Gibbs free energy used by Barret and Walsh [17] developing equations that treated the multicomponent mixture as a pseudo-binary. The dominant constituent in the mixture is elected as reference component and pseudo-binary pairs are formed between it and other components in the mixture. For each pair they assume that composition dependence of the activity coefficients takes the form of a two-suffix Margules-like equation. In this case the Gibbs free energy, g^E, is given by

$$g^E = a \cdot x_i x_j \tag{2.15}$$

where a is an empirical constant with energy units, characteristic of components i and j, depending on temperature but independent of composition. As the liquid phase activity coefficient is given by equation 2.10 they wrote for a pseudo-binary system ($i = 1, 2$)

$$\ln \gamma_i = \frac{a}{RT} (1 - x_i)^2 \tag{2.16}$$

By taking the logarithm and substituting equation 2.16 in equation 2.8 they obtain the reference component equilibrium constant

$$\ln(k_r P) = \frac{a}{RT}(1 - x_r)^2 + \ln P_{vp,r} \tag{2.17}$$

Equation 2.17 is used as a base for several local models developed by Chimowitz *et al.* [20]. The first two use equations for relative volatility solved in conjunction with equation 2.17 above. These equations are obtained from equation 2.8 written both for a component i and a reference component. The resulting equations are divided to obtain the ratio $\frac{k_i}{k_r}$ and the activity coefficient is substituted by equation 2.16. For the case where the ratio of pure component vapour pressures is assumed to be insensitive to temperature the following equation is obtained:

$$\ln\left(\frac{k_i}{k_r}\right) = A_i(1 - x_r)^2 + B_i(1 - x_i)^2 + C_i \qquad i = 1, ..., n_c \tag{2.18}$$

As an alternative to equation 2.18 they assume the ratio of pure component vapour pressures to be a simple function of temperature of the form $a + \frac{b}{T}$. This assumption gives a local model with an extra parameter,

$$\ln\left(\frac{k_i}{k_r}\right) = A_i(1 - x_r)^2 + B_i(1 - x_i)^2 + C_i + \frac{D_i}{T} \qquad i = 1, ..., n_c \tag{2.19}$$

A third alternative was to simply calculate the equilibrium constants for each component using equation 2.17 instead of relative volatilities.

The last alternative presented by Chimowitz *et al.* [20] approximates $\ln(\gamma_i)$ by a linear or quadratic function:

$$\ln(k_i P) = A_i x_i^2 + B_i x_i + C_i \qquad i = 1, ..., n_c \tag{2.20}$$

The behaviour of each model was studied and results compared both with rigorous calculations and previous work from Leesley and Heyen [1]. More accurate

behaviour was found, mostly because composition was considered as a variable in the local models.

Chimowitz *et al.* applied these equations both to fundamental problems in separation [21] and to dynamic simulation of more complex problems [22]. The models require initialisation and parameter updating which they developed successfully in both cases. In their dual level approach physical properties are also calculated and updated in the outside level. The publications by Chimowitz *et al.* [20] [21] [22] are the first where a systematic procedure is successfully built to determine the frequency for error and parameter update. Estimation and update of parameters is done using recursive least squares (RLS).

Following the usual least squares procedure applied to a linear system of equations they constructed a recursive procedure in which only one new rigorous measurement is used at a time. This has the advantage of keeping information on all past measurements, and also that they do not need to re-invert the matrix used to store them. This way the cost of perturbation and the inaccuracy resulting from neglecting cross dependencies is avoided. An uncertainty is set initially and a scaling factor is also used during the update to disregard old information as it becomes obsolete. The factor is increased in proportion to the square root of the estimated relative error. This gives a variable scaling, avoiding having new data, which really has not changed much, always replacing the old data.

The local models are always updated in the outside level of calculation. In the case of fundamental equilibrium calculations the local model parameters are updated every time the inside level (material balance) converges and the calculation is passed on to the outside level for physical property convergence. In dynamic simulation examples update is done when one of two different conditions occur. If the relative change between the local model output and the corresponding last rigorous calculation is greater than a given tolerance, an update is performed and the sampling time interval is reduced. Otherwise, if the error is still too small, the sampling time is increased. The error is again used in the scaling factor computa-

tion for parameter update. This means that if there was a recent large variation the recursive update would 'forget' faster about past information due to changing the scaling factor. Also the sampling interval is reduced causing more frequent update.

This method works well for relatively large problems, being stable and efficient with reasonable storage requirements. Implementation of the recursive least squares algorithm requires, however, careful attention to numerical details during parameter update.

A different approach was taken by Johns and Vadhwana [23] who used a similar procedure to Barret and Walsh [17] to approximate unit models instead of just physical properties. Their main aim was to avoid integration and iterative procedures in order to reduce computing time. They developed approximate models for the calculation of bubble and dew points, and for modelling flash units and simple distillation units. By first approximating the system to an ideal mixture they obtain explicit equations for bubble and dew point temperatures, as a function of pressure, composition and activity coefficients. For bubble point they obtained:

$$\frac{1}{T} = \frac{1}{T^r} - \left(\frac{R}{H_{av}}\right) \ln \left(\frac{\sum_{i=1}^{n_c} P_i \gamma_i x_i}{P} \right) \tag{2.21}$$

where T^r is the temperature at which the rigorous data was computed, H_{av} is some mean enthalpy of vaporisation, R the universal gas constant and P_i the pressure of pure component i that predicts the correct boiling point at matching conditions. The boiling point is given explicitly by:

$$\frac{1}{T_{bp,i}} = \frac{1}{T^r} + \left(\frac{R}{H_{av,i}}\right) \ln \left(\frac{P_i}{P}\right) \qquad i = 1, ..., n_c \tag{2.22}$$

The activity coefficient is given as a function of composition only in a Margules-like equation. This equation contains only one parameter. Thus it can be fitted

with one reading from the rigorous physical property package. Analogously for the dew point they obtain

$$\frac{1}{T} = \frac{1}{T^r} - \left(\frac{R}{H_{av}}\right) \ln\left(P \sum_{i=1}^{n_c} \frac{y_i}{\gamma_i p_i}\right) \tag{2.23}$$

For flash units they assume as parameters the fraction of feed vapourised, $\frac{V}{F}$, the ratio of temperatures $T_{d,b} = \frac{(T-T_{bp})}{(T_{dp}-T_{bp})}$ and the ratio of enthalpies $H_{d,b} = \frac{(H-H_{bp})}{(H_{dp}-H_{bp})}$. To avoid integration from bubble point ($T_{d,b} = 0$) to dew point ($T_{d,b} = 1$) explicit relationships are established as follows:

$$T_{d,b} = H_{d,b} + A_1 H_{d,b} (1 - H_{d,b}) \tag{2.24}$$

$$\frac{V}{F} = T_{d,b} + A_2 T_{d,b} (1 - T_{d,b}) \tag{2.25}$$

Only one rigorous point is needed to obtain A_1 and A_2. The algorithm works well for near ideal mixtures. It is less accurate however for nonideal mixtures.

Johns and Vadhwana [24] extended their earlier work by developing an optimisation method for updating the approximate model parameters. Their aim is to optimise the computing time by calculating the optimal number of local calculations before a rigorous calculation has to take place. The resulting expression is based on several assumptions. The values calculated by the local and rigorous models are linearly convergent to their respective solutions. The difference between the values calculated by the local and rigorous models at the same iteration step increases super linearly from the starting point. The final assumption is that the error in the local models is linearly related to the distance between refitting point and rigorous solution point. The mathematical expressions for the above assumptions result in an explicit equation for the number of local calculations, n, of the form

$$r^n = \frac{\nu \ln \nu}{\left(\frac{t^r}{t^l} - 1\right)(r - \nu) \ln \left[\frac{\left(\frac{t^r}{t^l} - 1\right) r}{\frac{t^r}{t^l}} \right]} \tag{2.26}$$

where t^r and t^l correspond to time taken, respectively, by a rigorous and a local calculation, r is the linear convergence rate and ν gives a measure of the local model quality. Equation 2.26 depends on the credibility of the values assigned to r and ν. Johns and Vadhwana examined the behaviour of equation 2.26 for different values of $\frac{t^r}{t^l}$, ν and r. They concluded that n is rather insensitive to the quality of the model and the equation performed well for most practical cases. They also concluded that the number of local model calculations is independent of the iteration starting point. One cumbersome issue still remaining is the estimation of r and ν, since $\frac{t^r}{t^l}$ can be calculated from a one off calculation using each model. The values of r and ν are calculated using an arbitrary procedure that gives and approximation to their value.

Following from Johns and Vadhwana [23], Ponton [25] presents a non-iterative procedure for equilibrium calculations. The general case of a flash is presented, similarly to that studied by Boston and Britt [18]. Feed composition, heat load and pressure are given. Vapour and liquid outputs, temperature and vapour split ratio must be determined. The conventional calculation requires an iterative solution of the material and energy balances until suitable values for vapour split ratio and temperature are found. Ponton noted, however, that the relationship between vapour split ratio and total enthalpy, i.e. combination of material and energy balances, is close to linear. He made use of this property to fit the vapour split ratio to an approximate function in the form of a rational function:

$$\frac{V}{F} = \frac{A_1 + A_2 H}{1 + A_3 H} \tag{2.27}$$

where A_1, A_2 and A_3 are parameters that can be determined using three distinct rigorous points. Such a rational function provides non-linearity and is relatively easy to fit. The method works well for narrow boiling mixtures, but results are not so accurate for wide boiling mixtures.

In a more recent work Hillestad *et al.* [5] implement another method for estimating the error of approximate models. This method is intended for dynamic simulation. Like Macchietto *et al.* [22] they use recursive least squares for parameter update. The approximate function used has the form

$$\ln(k_i P) = A_i + \frac{B_i}{T} + C_i (1 - x_i)^2 \qquad i = 1, ..., n_c \tag{2.28}$$

Equation 2.28 does not take into account interactions between components in the mixture, hence it is not such a good approximation for strongly nonideal mixtures. However the error estimation model performs reasonably well. The estimated error is defined as the difference between the value obtained using the rigorous model and the value of the last updated point. To calculate this error a Taylor series expansion truncated after the third term is used around the last updated point. As the approximate model is given by equation 2.28 the following quadratic structure is obtained for the error at point k, ϵ_k:

$$\epsilon_k(x) = \epsilon_k(x_k) + \frac{1}{2}(x - x_k)^T \mathbf{Q}_k (x - x_k) \tag{2.29}$$

where x is the vector of independent variables in the approximate model and $\mathbf{Q}_k$ is an estimate of the Hessian matrix at point k, giving a measure of the rigorous model curvature. An estimate of $\mathbf{Q}_k$ is used to avoid too many calls to the rigorous package. The estimation is done by perturbing equation 2.28 around point k. When the calculated error is too large the rigorous model is used and the parameters are updated. This enables the correct computation of the exact error and equation 2.29 can be fitted again with the correct Hessian, thus updating $\mathbf{Q}_k$.

Assuming a rank-one update and a constant rigorous model curvature over the interval between two updates, the equation for recursive updating is established as:

$$\mathbf{Q}_{k+1} = \mathbf{Q}_k + \frac{(x_{k+1} - x_k)(x_{k+1} - x_k)^T 2\delta_{k+1}}{\left[(x_{k+1} - x_k)^T (x_{k+1} - x_k)\right]^2} \tag{2.30}$$

where δ_{k+1} is the difference between the measured and the predicted error. The method does not require any additional property evaluations except in the initialisation.

This work was extended by Støren and Hertzberg [26] in a recent publication. An extra parameter was included both in the model and in the error function. This parameter is then updated while the parameters in the original model are kept constant. The method performed well although instability can occur if an update is executed far from the region where the actual error is close to the predefined one.

Also recently Hager and Stephan [27] presented a different approach by constructing a group model for multicomponent mixtures. Thermophysically similar components are classified into substance groups. Components of the same group are assumed to have ideal behaviour and interactions between components of one group and another should be similar. An overall mole fraction, $x^{(g)}$, is defined for each group as

$$x^{(g)} = \sum_{k,g} x_{k,g} \tag{2.31}$$

where $x_{k,g}$ are mole fractions of each component k in group g. Similarly an overall group equilibrium constant, $k^{(g)}$, is given by:

$$k^{(g)} = \prod_{k,g} k_{k,g} \tag{2.32}$$

where $k_{k,g}$ are the equilibrium constants of each component k in the group g. The division of components into groups follows Ewell's classification [28]. Hence, for a particular multicomponent mixture the simplified equations describing the physical properties can be expressed in terms of groups of components instead of each component separately. Thus the number of necessary parameters is reduced. The examples provided by Hager and Stephan [27] are again for dynamic simulation only and compare well with results previously obtained by Macchietto and coworkers [22].

Recent work published by Perreguard [29] describes a general model simplification procedure to be used in the calculation of physical properties both with dynamic and steady-state simulation. The procedure makes use of a Newton-like method to solve the set of nonlinear equations. Its novelty lies on the use of a simplified model for calculating the Jacobian only, while the function values, e.g. equilibrium constants, are always calculated using the rigorous model. A reliable simplified model is required for Jacobian calculation, otherwise the error and updating procedure may not work properly. Perreguard calculates equilibrium constants using a Wilson-like equation, viz.

$$\ln k_i = A_i + \frac{B_i}{T} + C_i \left(1 - x_i\right)^2 + D_i \ln \left[\frac{P}{P^{\text{ref}}}\right] \tag{2.33}$$

where A_i, B_i, C_i and D_i are parameters for component i, T and P are temperature and pressure, P^{ref} is the reference pressure and x_i the molar composition of component i in the mixture.

Since the derivatives of k_i with respect to x_i, T and P are required for the Jacobian and they can be explicitly written from equation 2.33, there are enough equations to determine the four unknown parameters from one rigorous model evaluation only. The procedure works well for moderate nonideal mixtures, although it is not as reliable as that developed by Macchietto and coworkers [22]. It is less

accurate for strong nonideal mixtures, due to stronger composition dependence of the physical properties.

2.5 Distillation of Nonideal Mixtures

Thus far the discussion has concentrated on ways of reducing the computing load by using approximate models in the calculation of physical properties. Simple flash and distillation models have been developed by using approximate physical properties. Keeping physical properties up to date is a key factor when nonideal mixtures are considered. Particularly in design and simulation of nonideal distillation units, the cost of keeping the physical properties up to date is usually high. Another way of reducing computing load is through the use of shortcut methods to calculate design variables.

Shortcut methods have been published in the past to be used in distillation of ideal mixtures. These methods include using the Underwood equation [9] to calculate the minimum reflux ratio, the Fenske equation [7] for the minimum number of stages and the Gilliland correlation [8] for the effective number of stages. However the application of Underwood and Fenske equations in the case of distillation of nonideal mixtures is questionable due to the inherent assumption of constant relative volatility across the column.

The present work investigates ways of establishing shortcut procedures for nonideal distillation. So far in the discussion there has been no reference to azeotropic behaviour and its effects on separation. The emphasis has been on establishing correlations for accurate calculation of physical properties in a given mixture. Assuming now there is a reliable way of obtaining the physical properties the next question is how the mixture behaviour affects the separation process. The presence of azeotropes creates zones of distillation in the equilibrium diagram which are bounded by $n_c - 2$ dimensional hyperplanes and distillation bound-

aries. A distillation boundary indicates the existence of a concentration profile corresponding to the azeotropic mixture. For many years scientists have tried to understand the exact meaning of distillation boundaries and their implication in separation feasibility. This is a subject of discussion in section 2.6.

The discussion in this work is restricted to ternary mixtures. Most multicomponent systems contain only binary or ternary azeotropes. Hence they can eventually be reduced to separating a ternary azeotropic mixture. A typical problem is that of separating a binary mixture that forms an azeotrope into its pure components. Separation can be achieved in several ways. Pressure shift can be used if azeotrope composition is sufficiently sensitive to changes in working conditions, i.e. pressure. In other cases a third component may be added as an entrainer. The entrainer may or may not be a species that reacts preferentially with one of the azeotrope forming components. Where reaction occurs the process of separation is called reactive distillation. The present work addresses non-reactive entrainers only, which themselves can be of several kinds. A separation using an entrainer that introduces no additional azeotropes in the mixture is called extractive. The entrainer modifies the relative volatility between the other species making separation possible. On the other hand, entrainers may be used that form a new azeotrope with at least one of the azeotrope forming components. This type of distillation is called azeotropic distillation. It can be further classified as homogeneous if there is no phase separation or heterogeneous when liquid phase split occurs.

In heterogeneous azeotropic distillation advantage is taken of the formation of two liquid phases by using decantation as part of the separation process. However the system controllability will be more difficult and crucial in process operation, since a change in operation conditions may cause liquid phase separation to occur within the distillation column, thereby reducing efficiency.

This work is concerned primarily with extractive distillation and homogeneous azeotropic distillation using it as a starting point to understanding and tackling

the nonideal distillation problem. Since extractive distillation is a special case of homogeneous azeotropic distillation, where no new azeotrope is formed with introduction of an entrainer, it will be encompassed within the definition of homogeneous azeotropic distillation definition. Other authors, such as Levy *et al.* [30] and Doherty and Caldarola [31], have used similar generalisations. A discussion will follow on the current knowledge on the issues to consider for simulation and synthesis of nonideal separation systems.

2.6 Equilibrium Diagrams

The equilibrium diagram of a mixture containing one or more azeotropes is not as straightforward as that of an ideal mixture or nonideal mixture that does not contain azeotropes. Presence of azeotropes causes the relative volatilities to change considerably in different points of the diagram, creating distillation zones and boundaries. These zones have an important role on the separation feasibility as will be discussed in section 2.7.

For a separation by distillation to be feasible two conditions must be satisfied, as described by Hoffmann [32]:

1. There must be, at least, one path of calculation accounting for material and energy balances and equilibrium relationships, describing each stage of the distillation column, viz.

$$x_{i,j} = f\left(x_{i,f}, P_{vp,i}, \gamma_i, T, P, R, D/F, m, ...\right) \tag{2.34}$$

where $x_{i,j}$ and $x_{i,f}$ are the liquid compositions of component i in stage j and at the feed stage f, respectively, $P_{vp,i}$ the vapour pressure of pure component

i, γ_i the liquid activity coefficient of component i, T the temperature, P the pressure, R the reflux ratio, D/F the overall recovery and m the number of stages. As discussed in the previous sections $f()$ is usually a complex function.

2. The overall balance must be satisfied:

$$F = D + B \tag{2.35}$$

$$x_{i,f}F = x_{i,d}D + x_{i,b}B \tag{2.36}$$

where F, D, and B are total flows of feed, distillate and bottom products, respectively, and $x_{i,f}$, $x_{i,d}$ and $x_{i,b}$ are the corresponding compositions for component i.

For a feasible separation at infinite reflux the first condition is described by a residue curve or distillation line connecting the top and bottom compositions given by:

$$y_{i,j} = f\left(x_{i,j}, P_i^o, \gamma_i, T, P, ...\right) \tag{2.37}$$

$$x_{i,j+1} = y_{i,j} \tag{2.38}$$

where $x_{i,j}$ and $y_{i,f}$ are the liquid and vapour compositions of component i in stage j, respectively.

The operation of an adiabatic column at infinite reflux combines the operation at total reflux and a material balance across the column since it assumes that

products are taken out. Operation at total reflux is convenient in design calculation but not of much use in practice, since no products are ever taken out. Thus the concentration profiles of a column operating under infinite reflux conditions are in fact a number of equilibrium steps connecting the column stages. Figure 2.1 shows a conventional distillation column with one feed.

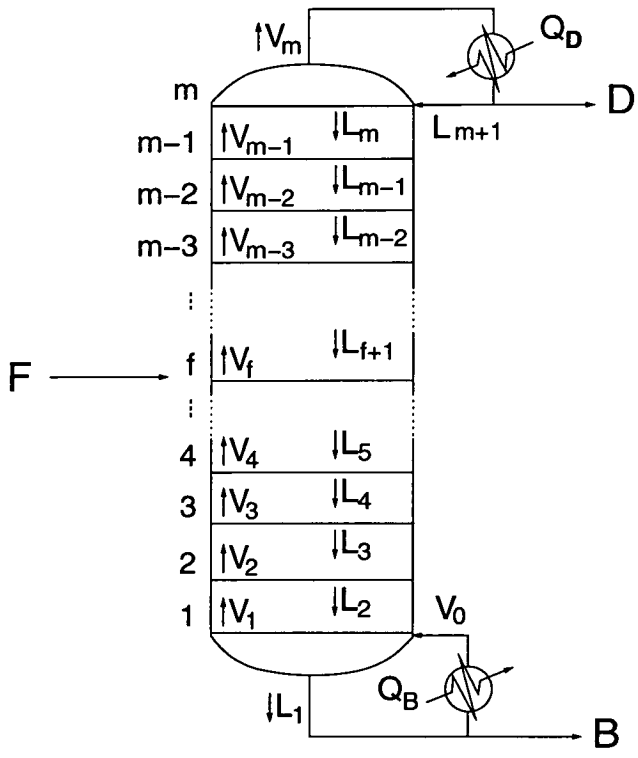

Figure 2.1: Diagram of a distillation column.

At infinite reflux the vapour rising from each stage has the same composition as the liquid coming down from the stage above, as given by equation 2.38.

It is also assumed that vapour liquid equilibrium is achieved for each stage, hence the vapour and liquid compositions are explicitly related in each stage. The relationship can be determined experimentally or by a well established equilibrium relation, such as one of those mentioned in section 2.3. Once an initial composition is specified at one extreme of the column the system can be solved step by step by

a succession of tie lines. Stichlmair *et al.* [33] defined distillation lines by removing the tie line steps and connecting the points with a curve, as shown in figure 2.2.

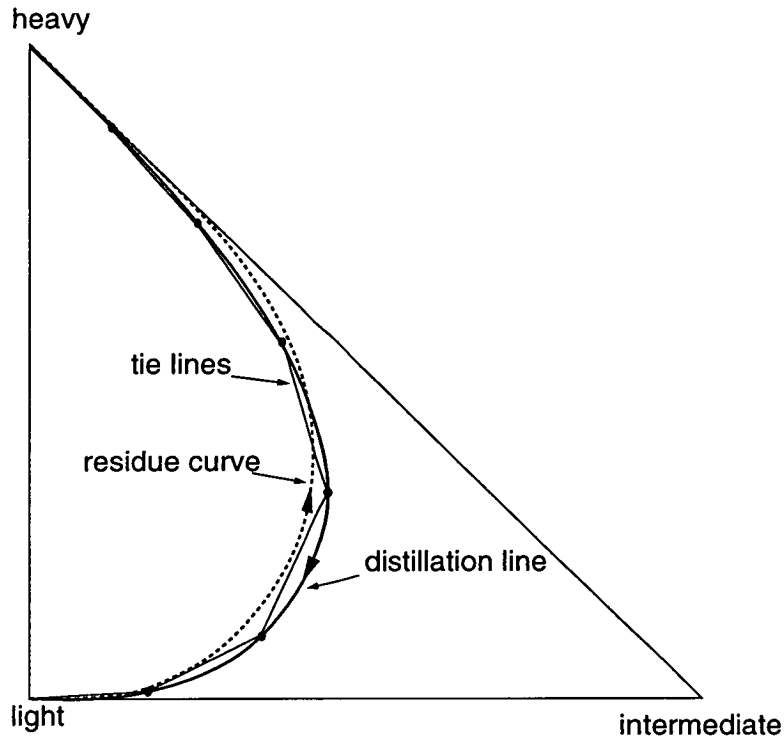

Figure 2.2: Residue curves and distillation lines in the ternary equilibrium diagram.

The direction in which liquid is constantly boiled off (from the bottom to the top of the column) is used to construct residue curve maps. Residue curves are given by:

$$\frac{dx_i}{d\xi} = x_i - y_i \tag{2.39}$$

where x_i and y_i are the liquid and vapour composition profiles, respectively, for component i and ξ denotes the dimensionless time for the evaporation process or the dimensionless height of a packed column [34]. At infinite reflux the differential equations describing packed columns coincide with the residue curve equations [10] [35] [36]. Hence the residue curve gives a good approximation for the composition

profile of a column operating at infinite reflux and can be used interchangeably. Figure 2.2 shows graphically the qualitative relation between a residue curve and a distillation line in the equilibrium diagram. The difference between them is usually insignificant and can be neglected in the calculations [36].

Residue curves provide useful information on composition dependence in vapour-liquid equilibrium for a given system. Various authors use residue curve maps, which are a collection of residue curves for a system, to study and understand the system behaviour at given operating conditions. Residue curve maps are particularly useful in determining feasibility and in the selection of entrainers, which will be discussed in sections 2.7 and 2.8.

Doherty and Perkins [37] [38] [39] [40] were the first to do an intensive analysis of residue curve maps for ternary mixtures. They characterise the equilibrium surface mathematically and combine this with physical considerations to conclude on some properties of residue curve maps [37]. Their study is, however, constrained by several physical considerations and simplifications, which lead to conclusions that are not adequate for nonideal mixtures. In the equilibrium calculations a quadratic regular solution model is used [38] in the form of the two suffix Margules equation described in Reid *et al.* [11]. Singular points and their kind are determined using the quadratic model. Such points are obtained by examining residue curves which run towards the highest boiling points. Singular points can be of four different kinds, as shown in figure 2.3. A stable node has all residue curves converging to it, i.e. it is an absolute maximum boiling point. An unstable node is an absolute minimum boiling point and all residue lines originate at this point. Saddle and chair points are intermediate boiling points and have lines converging to them but then continuing in the direction of a stable node.

The procedure implemented by Doherty and Perkins [37] limits the use of their theory, particularly for strongly nonideal mixtures which do not follow the quadratic model behaviour. They propose that these cases be treated as special cases and examined individually. The distillation boundaries are also considered

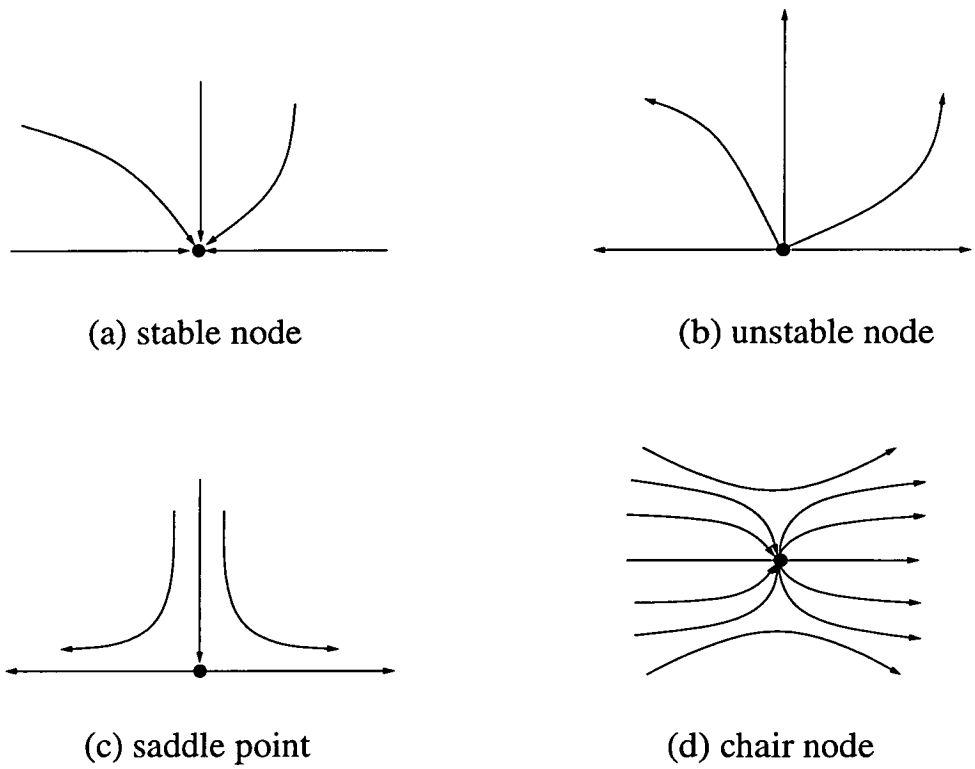

Figure 2.3: Types of singular points.

to be rigid, i.e. cannot be crossed. In part 4 of their work Doherty and Perkins [40] prove mathematically that the residue curves are unique and do not intersect. Later in part 5 Dongen and Doherty [41] show that the valleys and ridges in the temperature surface do not coincide with the azeotropic distillation region boundaries. They conclude this will give more flexibility in design but it was only in 1991 that Wahnschafft [36] explored and took advantage of this fact in separation sequencing.

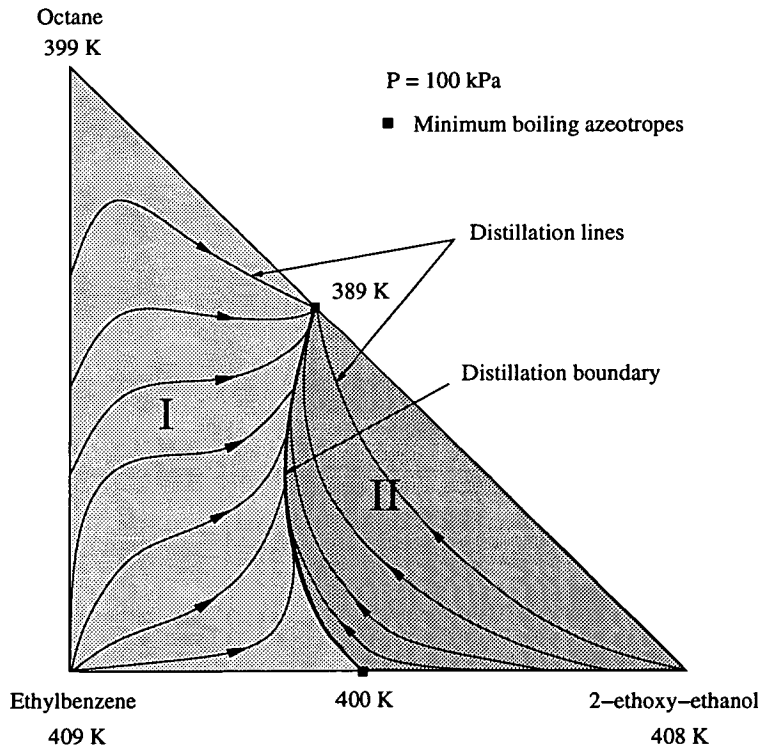

Figure 2.4: Example of a ternary mixture with a distillation boundary.

As figure 2.4 shows the composition space is divided into two different areas called distillation regions I and II. These regions are separated by a distillation boundary, the line in bold in the figure, which limits the separation achievable by columns operating at total reflux [36]. The distillation boundary curvature is a common occurrence and reflects the selectivity with which components modify each others volatilities. A straight line indicates no selectivity at all, which is rare in the case of nonideal mixtures. It is important to remember, however, that

these distillation boundaries do not always coincide with ridges and valleys of the boiling temperature surface [41] [31] [36]. As early as 1945, in experiments with five different mixtures, Ewell and Welch [42] realised the existence of ridges in vapour liquid surfaces. These surfaces, they remarked, are curved and can be crossed during rectification when approached from the concave side. In the case of figure 2.4 the concave side is defined as the side of the boundary in distillation region II, whereas the convex side is that in distillation region I. The belief that this was not possible derives from the initial studies on residue curves and distillation boundaries. The temperature is always found to increase along a residue curve and residue curves are always diverging from or converging towards distillation boundaries. These facts led researchers in the past to believe that the distillation boundaries coincided with the valleys and ridges of the temperature surface [41]. However the composition profiles do not approach valleys or ridges in the boiling temperature surface perpendicularly [43] so there can be paths across the ridge that lead continuously upwards.

2.7 Feasibility of Separation

Until recently most work has been devoted to ideal mixtures. The lack of knowledge and unpredictability of the behaviour of nonideal mixtures justified the reduced attention in the past given to the feasibility of their separation. Interest in this area has grown considerably in recent past as more progress has been made towards understanding their behaviour.

In nonideal distillation the relative volatility of the components can change so that the order of volatility of the components changes locally. This fact, allied to the lack of knowledge in the behaviour of nonideal mixtures, has been the cause for the difficulty in predicting separation sequences in nonideal distillation.

The conditions for a feasible separation, as defined in the previous section, require that the overall material balance is satisfied and that there is at least one path of calculation accounting for material and energy balances and equilibrium relationships describing the individual stages of a distillation column. The latter condition can be evaluated by checking the feasibility of operation at infinite reflux, hence that there is a distillation line going through the top and bottom compositions. However it has been shown that finite reflux ratios sometimes lead to a better separation than infinite reflux for nonideal mixtures [10] [44], [45]. One of the reasons for this is the result of increased curvature of the distillation lines as the reflux ratio decreases from infinity [35].

Laroche *et al.* [10] published a review of feasibility and entrainer selection in azeotropic distillation. They examine the operation at finite and infinite reflux separately. The overall effect of increasing the reflux is a combination of two competing effects:

- It improves the operating lines in the column sections, thereby increasing the separation.

- It dilutes the entrainer in the extractive section, decreasing the relative volatility of the azeotrope forming components, thereby decreasing separation.

Laroche *et al.* [44] show how these two effects combine for different reflux ratios. For heavy entrainers, which are usually fed close to the top of the column, the separation first increases with the reflux ratio, reaches a maximum and then starts decreasing because the effect of dilution takes over. In the limiting condition of operation at infinite reflux no separation occurs. But the simplicity and speed of calculation of the residue curve maps and the information they provide makes them a suitable tool to determine the feasibility of separation in the first stage of design [46] [47]. In many cases the methods used hitherto involve heuristic rules

and assumptions that often unnecessarily constrain the feasibility of separation causing the user to overlook feasible separations.

Dongen and Doherty [41] analysed the residue curve maps' topology for separation of ternary mixtures. They looked at how the topology of the vapour liquid equilibrium surface constrains the range of possible compositions for the distillate and bottom products. This work was then extended by Doherty and Caldarola [31] where an attempt at establishing entrainer selection rules is done. These rules derive from the assumption that it is impossible for the column material balance line to cross the distillation boundary regardless of the operating conditions. This assumption proved to be restrictive as will be discussed in section 2.8. Later work [33] [36] [48] [10] [34] showed that separation can be feasible even for these cases, as long as the boundary is sufficiently curved.

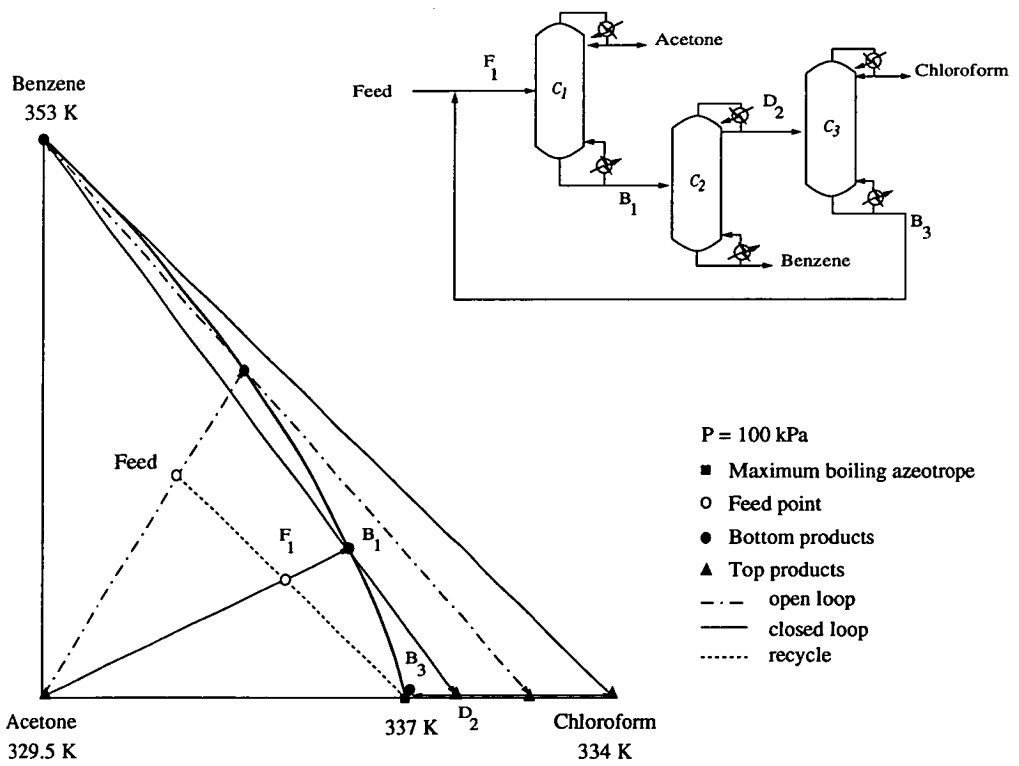

Figure 2.5: Separation of a ternary mixture in a three column sequence.

The example in figure 2.5 illustrates this. If benzene is present in the feed in a

sufficient amount it will allow the first column to separate acetone at the top and a mixture with a composition close to the distillation boundary is obtained as the bottom product. The overall separation is achieved by recycling the azeotropic mixture that comes out at the bottom of the third column and mixing it with the original feed. The bottom product of the first column is then separated in a second column by crossing the boundary, i.e. the feed for this column is on the concave side of the boundary whereas both products are on the convex side. This arrangement still complies with the definition of separation feasibility described in section 2.6. In this way benzene is separated as a bottom product in the second column and a binary mixture with only traces of benzene comes out at the top. This mixture is then easily separated in the third column into the third component, chloroform, at the top and the azeotrope to be recycled. The reasons for boundary crossing in this case have no relation to the fact that the residue curve map does not overlap with the temperature boiling surface. This is, however, an interesting and stable operation as shown by McKinnel [49]. He was able to simulate the column dynamically in his distillation column dynamic parallel simulator, PDIST and PNET [50]. Starting from an estimate for the feed, of unknown composition because it depends on the first column output, and from the product specifications the convergence to the expected operating profile was smooth.

In parallel with the detailed study of the residue curve map, Dongen and Doherty [35] published a boundary value method for design of homogeneous azeotropic distillation of ternary mixtures. This method follows certain assumptions, such as constant molar overflow, theoretical stages and single saturated liquid feed. It is the basis for the development of more complete methods in later publications by Doherty and coworkers [30] [31] [51] [52] [53], particularly for the calculation of minimum reflux ratio. The material balances for a column operating at steady state are approximated by differential equations. This procedure is equivalent to replacing the stage composition points by continuous lines. The approximation is done by a Taylor series expansion and the solution is obtained by applying the 4th

order Runge Kutta method in the integration. They choose to ignore terms of order higher than one in the Taylor expansion giving a good qualitative, if arbitrary, approximation to their study. They assume a given ternary mixture where the feed composition and pressure are specified and product specifications are known, i.e. compositions for 2 components, at the top and the bottom of the column. A search for a feasible separation path starts from both ends of the column, top and bottom. The paths should intersect at the feed stage composition for the separation to be feasible. The application of the method in the design case implies that a search must be done for a value of reflux ratio that makes the separation feasible, i.e. that makes the lines of the stripping and the rectifying sections intersect at the feed stage. The number of stages is also obtained but the process involves trial and error and is time consuming.

Fidkowski *et al.* [54] [34] took the work developed by Doherty and coworkers to implement an equation based method for determining separation regions. They made use of the pinch point equations for the rectifying and stripping sections provided by Dongen and Doherty [35] together with material and energy balances across the column and the condition that the lines coincide at the feed stage composition. Combining the above equations they obtained the necessary equations to calculate the distillation limits and design variables given the feed composition, thermodynamic state and operating pressure. The feasibility check is based on the work from Foucher *et al.* [46], who developed a criterion to quickly build up the residue curve maps and identify feasible entrainers.

The procedure implemented only requires the knowledge of boiling temperatures and the approximate composition of pure components and azeotropes in the mixture. This information in conjunction with a set of properties of the singular points listed in the same publication, is used to build up an adjacency matrix that represents the connections between the species in the mixture. If there is a connection, i.e. residue line, between the species the corresponding term in the matrix is set to 1, otherwise it has a value of zero. Once the matrix is completely

set it is straightforward to establish connections between the species in the ternary equilibrium diagram. However the distillation boundaries are approximated by straight lines taking no advantage of the boundary curvature. When a ternary saddle exists and there are as many binary azeotropes as components, it is also not possible to determine one unique structure for the equilibrium diagram in this way. Several possible structures can be constructed and it is necessary to use a VLE method to build up the actual residue curve map. The same holds for the case named as 'local indeterminacy' by the authors. Local indeterminacy consists of having a different number for the binary saddles and intermediate boiling azeotropes. An example in the same publication illustrated in figure 2.6 shows the two possible configurations generated by the method. Again the actual residue curve map must be calculated to decide on the correct one.

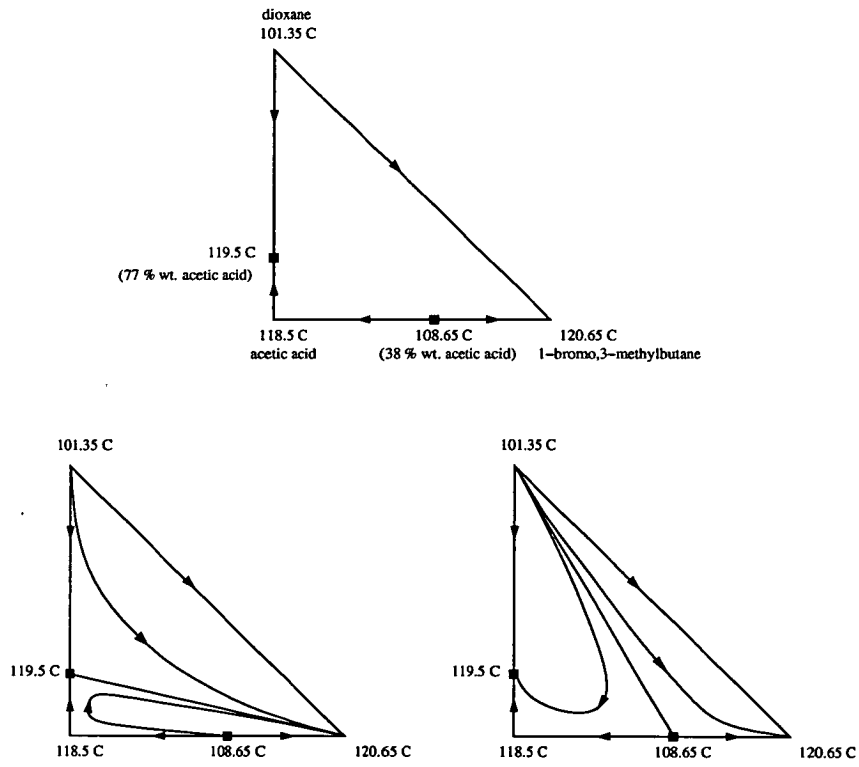

Figure 2.6: Example of locally indeterminate system as published by Foucher *et al.*

Another fast procedure to determine separation feasibility is that of considering

separation at infinite reflux. Although the method is not infallible, as shown by Laroche *et al.* [44], it works in a great number of cases and provides a quick way of determining regions of feasible products.

The feasibility of separation at infinite reflux requires that:

- There is a residue curve or distillation line connecting the top and bottom compositions given by equations 2.37 and 2.38.
- There is a material balance line connecting the products' compositions and going through the feed composition, as given by the equations 2.35 and 2.36.

Stichlmair *et al.* [33] used this definition to identify product composition regions. Figure 2.7 shows an example published by them. They used distillation lines to draw the vapour liquid equilibrium diagram of ternary mixtures. The distillation lines, as described in section 2.6, are constructed by interconnecting the liquid composition points corresponding to stages of a column operating at infinite reflux. For simplicity Stichlmair *et al.* removed the points and left the smooth lines only. By drawing first the distillation line that passes through the feed composition and then the material balance lines that start at its extreme boiling points and also pass through the feed composition, the limits of feasible product composition regions are obtained. Taking as an example point F_1 in figure 2.7 the application of the method described by Stichlmair *et al.* gives the dark shaded areas of that side of the boundary as feasible products' composition region. These areas contain the set of points of the distillation lines which can be combined with a material balance line that intersects the feed distillation line twice, including the intersection at the feed point.

The feasible regions at infinite reflux are therefore constrained by the sides of the composition triangle, the infinite reflux curve (distillation line) through the feed and the material balance lines that include feed F_1 and the points of lowest and highest temperature on the distillation line.

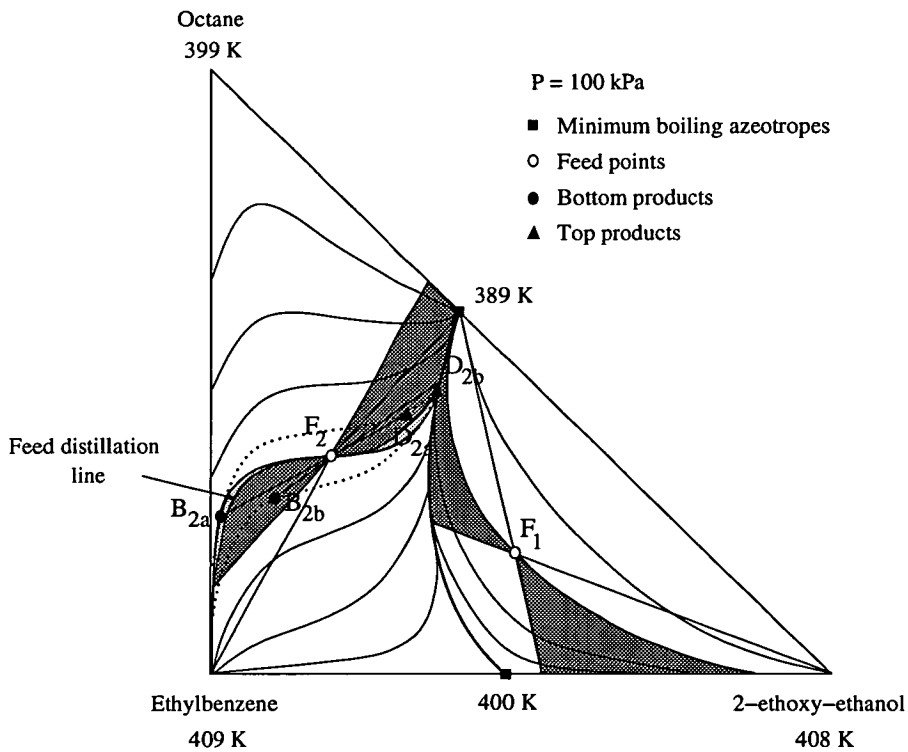

Figure 2.7: Identifying feasible products in nonideal ternary mixtures.

The situation becomes more complex when the distillation lines have an inflexion point and a feed such as F_2 in figure 2.7 is located close to that point. The method still works even for more complex cases but, as shown by Wahnschafft *et al.* [36] [43], it includes sufficient conditions only and leaves out an area of feasible products, as clearly seen in figure 2.7 (light shaded areas). Wahnschafft described a method that is able to determine this area as well. The method is based on the construction of pinch point curves, which had been previously discussed by Nikolaev *et al.* [45] when the phenomenon of crossing distillation boundaries was being examined. In the construction of the feed pinch point curve tangents to the distillation lines are drawn that point through the feed composition point. The points that form the feed pinch point curve are the intersection of the tangents,i.e. material balance lines, with the same distillation line on the other side of the feed. This curve provides the extra area of additional feasible product compositions shaded lightly in figure 2.7.

2.8 Entrainer Selection

The selection of a suitable entrainer is the first stage of the synthesis procedure in azeotropic distillation. The present work is more concerned with the second stage where a preliminary flowsheet structure is obtained for a previously chosen entrainer. Nevertheless, the choice of entrainer is an important issue to consider and a review of research done in this area is justified.

Until recently the choice of entrainer has been left very much to trial and error or practical experience. Work has progressed with the understanding of the equilibrium diagram and feasibility of separation discussed in sections 2.6 and 2.7, respectively.

The point at which the entrainer is fed to the column influences the separation as pointed out in section 2.7. The entrainer can be previously mixed with the feed

or input at a different stage. This is particularly important where the entrainer is the extreme boiling component. Wahnschafft *et al.* [47] recently presented a preliminary method for screening entrainers by ranking them as heavy, intermediate and light boiling with respect to the azeotrope forming components.

Heavy entrainers

- When used to separate a minimum boiling azeotrope they are fed close to the top of the column, because that is where the critical separation occurs.
- When used to separate a maximum boiling azeotrope, they are only really required in the stripping section so they are usually fed with the feed stream.

Light entrainer

- When used with minimum boiling azeotropes, a distillation boundary is formed and there is no distillation line connecting the azeotrope forming components. The entrainer is usually fed below the azeotrope composition and recovered at the top of the entrainer recovery column.
- There is little practical interest in using this kind of entrainer to separate a maximum boiling azeotrope. Light entrainers normally accumulate in the vapour phase and nonideal behaviour usually occurs in the liquid phase, so there would be no marked influence in the separation. But if its use is recommended it should be fed at the bottom.

Intermediate boiling entrainer

This type of entrainer is not common because it is difficult to find a species with the appropriate boiling point, between that of the azeotrope forming components, that introduces no further azeotropes. They are, however, versatile in separation. As shown by Laroche *et al.* [55] [10] they enable the

separation of the azeotrope forming components in one single column if the loss of a small amount of entrainer is allowed.

Attempts have been made recently to systematise the choice of entrainers. There is still not a satisfactory methodology, although advances have been made to try to identify the factors that make a good entrainer. Most work makes use of the calculation at infinite reflux and residue curve maps to establish rules for entrainer selection. While giving a good account for the best entrainers that make the separation feasible at infinite reflux, the study is by no means complete because it will leave out entrainers that enable the separation at a finite reflux but fail at infinite reflux, a case that sometimes happens in homogeneous azeotropic distillation, as shown in section 2.7.

Doherty and Caldarola [31] show a shortcut procedure in which residue curve maps can be easily derived from the boiling temperatures of the pure components and the azeotropes. However they approximate all boundaries as straight lines taking no advantage of the boundary properties. They state that any component that does not place the azeotrope forming components in different regions from the column feed is a potential entrainer. The restriction of having both the feed and distillation column profile lying on the same side of the boundary excludes many candidate entrainers. According to a review on entrainer selection by Laroche *et al.* [44] a couple of industrial separations, as well as a class of light entrainers are left out. However Doherty and Caldarola [31] justified this decision by stating that the processes which are feasible with boundary crossing are not economically competitive.

Stichlmair *et al.* [33] took advantage of the system's distillation lines to determine the feasibility of separation for a candidate entrainer. They show that it is possible to use entrainers that introduce distillation boundaries if these boundaries are sufficiently curved. A curved boundary means that the relative azeotropic composition changes considerably in the presence of the entrainer. Since distilla-

tion lines are used to determine feasibility only entrainers that make separation feasible at infinite reflux are accounted for. As mentioned in section 2.7 some candidate entrainers will be left out because they may provide a feasible separation at finite reflux but fail at infinite reflux.

Their criterion assumes the entrainer will only be successful if the azeotrope forming components are stable nodes, i.e. they are termini of the distillation lines. They divide their criterion in two rules:

1. A heavy entrainer or an entrainer that forms new maximum boiling azeotropes can be used to separate a maximum boiling azeotrope.

2. A light entrainer or an entrainer that forms new minimum boiling azeotropes can be used to separate a minimum boiling azeotrope.

The criterion rules out intermediate entrainers, which had been suggested before by Hoffmann [32]. Also, as Laroche *et al.* [44] have shown, it accepts many candidate entrainers that do not appear to make separation feasible and excludes feasible operations in which saddle components are recovered. One of the reasons why their rules can fail is that they simply extended their conclusions from zeotropic distillation.

Stichlmair and Herguijuela [56] study separately entrainer selection with and without border crossing and they take intermediate boiling entrainers into consideration. Where no border crossing is considered their work followed closely that of Doherty and Caldarola [31]. The azeotrope forming components must be in the same distillation region, i.e. the azeotrope should not be an origin or terminus of distillation lines. Hence for

a minimum boiling azeotrope

Feasible entrainers are intermediate entrainers and the light entrainers that form intermediate boiling maximum azeotropes with the light azeotrope forming component.

a maximum boiling azeotrope

Feasible entrainers are intermediate entrainers and the heavy entrainers that form intermediate boiling minimum azeotropes with the heavy azeotrope forming component.

For processes with border crossing, azeotrope forming components must be either origins or termini of distillation lines. The equilibrium diagram is separated into two distillation regions by a distillation boundary. Stichlmair and Herguijuela [56] defined minimum requirements for a successful entrainer, viz

minimum boiling azeotrope

An entrainer lighter than the azeotrope, an intermediate entrainer forming new minimum boiling azeotropes with the light azeotrope forming component or a heavy entrainer forming new minimum boiling azeotropes where at least one of them should be lower boiling than the azeotrope to separate.

maximum boiling azeotrope

An entrainer heavier than the azeotrope, an intermediate entrainer forming new maximum boiling azeotropes with the heavy azeotrope forming component or a light entrainer forming new maximum boiling azeotropes, where at least one of them should be higher boiling than the azeotrope to separate.

Foucher *et al.* [46] followed the method from Doherty and Caldarola [31] by building the residue curve maps only from the knowledge of the pure component boiling points and approximate azeotrope compositions. This method gives a quick but limited study, with no general rules for entrainer screening. Distillation boundaries are approximated by straight lines, taking no advantage of the boundary curvature.

Laroche *et al.* [55] introduced a procedure for entrainer selection in the separation of minimum binary azeotropes. They focus on separation in two distillation

columns. The first column is the extractive column and separates one of the azeotrope forming components as a pure product and a mixture of entrainer and the other azeotrope forming component as the other product. The second column is the entrainer recovery column and separates the second azeotrope forming component from the entrainer. The entrainer is normally recycled to the first column.

Only entrainers that do not introduce additional azeotropes are considered. They introduce new definitions that are used in comparison of suitable entrainers:

- **Equivolatility curves:** curves along which the relative volatilities of the two azeotrope forming components are constant.
- **Isovolatility curves:** curves along which the relative volatilities of the two azeotrope forming components are equal to 1.
- **Local volatility order:** relative volatility between the two azeotrope forming components in a specific separation region.

Their criterion followed from the analysis of these curves and is summarised below:

- Select heavy entrainers which send the lighter **or** the heavier azeotrope forming component to the top of the extractive column;
- Select light entrainers which send the lighter **or** the heavier azeotrope forming component to the bottom of the extractive column.

They also consider all intermediate entrainers. Entrainer selection is used to design, cost and optimise sequences and the final result with lowest cost will give the best entrainer.

In their review of entrainer selection Laroche *et al.* [44] published their own results based on a survey done on 416 binary minimum boiling azeotropes. They concluded that:

- Heavy entrainers that do not introduce azeotropes *almost* always make the separation feasible;
- Intermediate entrainers that do not introduce azeotropes always make the separation feasible;
- Entrainers that cause the binary azeotrope to become a saddle always make the separation feasible.

Their results are qualitative and they are not dependent on physical specifications. However they acknowledged that these specifications are very important for feasibility in homogeneous azeotropic distillation, due to its sensitivity to uncertainty in the thermodynamic data.

In conclusion, although considerable attention has been given to the subject of entrainer selection recently, there is still no complete and systematic criterion for entrainer selection. Progress has been made in recent years but some information is contradictory and incomplete, due to deficiencies in the rules and to the difference in operation observed in some cases between finite and infinite reflux.

2.9 Synthesis of Nonideal Distillation

Westerberg [57] produced a review on the synthesis of distillation systems. The review does not include azeotropic distillation which then was only beginning to be addressed. Westerberg shows how, even for systems without azeotropes, the solution space is large, greatly increasing with the number of components to separate. He summarises synthesis methods which include use of heuristics and branch and bound search. He comments on the fact that, even for simpler systems, heuristics sometimes contradict each other making the synthesis process difficult. A review of heat integration for this type of system is also supplied. Normally heat integration is considered after the synthesis structure has been found.

The richness of the solution space for non-azeotropic mixtures reported by Westerberg [57] is more predictable than that of azeotropic distillation. In azeotropic distillation there may be many alternatives and there is no general rule to choose among them.

It was only in this decade that synthesis packages started to emerge geared towards nonideal distillation. A summary is given by Malone and Doherty [58]. One of the most complete tools for automated synthesis of nonideal distillation was developed by Wahnschafft *et al.* [36] [59]. This tool, named SPLIT, uses a decomposition approach where streams, stored in a stack, are considered sequentially. The separation method is chosen before finding feasible splits and selecting operating conditions. Processes are created by choosing separation steps until all output streams meet the product specifications or can be recycled. The separation step is chosen by analysing which splits still have not been carried out and two options are considered:

- Maximum separation between components with different final destinations.
- Minimum separation of certain streams so that output streams can later be sharply separated into products.

If sharp splits are feasible only the first option is considered. The choice of recycles is also automated for the following cases:

- To facilitate separation, e.g. entrainers.
- The flowsheet already contains separation steps which lead to the desired separation.

SPLIT uses a blackboard architecture allowing the user to optionally guide the solution procedure. It relies on heuristic rules and handles the problem formulations at different levels of abstraction in a parallel fashion, which is useful

for the evaluation of alternatives during conceptual design. Heat integration has not been considered. The distillation model used is RADFRAC from Aspen Plus [60].

Malone and Doherty [58] are developing a computer aid called MAYFLOWER also geared towards nonideal distillation. The system is still not capable of synthesising flowsheets. It includes a feasibility check and designs individual units. The procedure requires the specification of the feed composition, operating pressure and product purity. In the feasibility check the residue curves are constructed from a chosen VLE model or from experimental data. If not enough information is available a sketch of the distillation map is done based on the work of Foucher *et al.* [46]. The separation sequence is then established through a series of heuristics. Rules of thumb are used to determine the effective operating flows and number of stages and correlations are used for costing. With this procedure a set of comparable least expensive alternatives is found. The design is then refined to optimise variables such as the pressure, reflux ratio, etc.

A different approach is taken by CHiPS. CHiPS has been developed by Fraga and McKinnon [61]. Its main aims are providing good solutions quickly that can then be refined. It includes a single pass generation of heat integrated processes, i.e. heat integration, if requested, is done simultaneously as part of the branch and bound search for the best sequence. It can also provide the n best solutions. The package does not include nonideal distillation. It contains models such as reactors, absorbers and ideal distillation columns. However it allows the user to develop and include further models through its unit model interface. Hence, a nonideal distillation model can be implemented and tested with it.

Smith and Pantelides [62] have recently proposed a different approach using complete plant connectivity and detailed unit operation models for the synthesis of complete and rigorous plant flowsheets. For a given feed composition, product specification and set of units, as well as the maximum number of each unit allowed, the program optimises the flowsheet choosing the required number of units

and links between them. Each input to each unit and all final products may be formed by combining all raw materials and all unit outputs in proportions determined by the optimisation. Such a complete connectivity together with the maximum number of detailed units allowed for each type usually incurs in lengthy calculations. However they state that the use of detailed models in fact alleviates the combinatorial nature of the problem and the end result is final with no need for further refining. Recycles and best input location for raw materials are done automatically due to the method's nature. A drawback is that it tries to do the work completely on its own retrieving one best solution, making it hard for the user to experiment and consider between the best alternatives. This is aggravated by the fact that complete connectivity does not guarantee a global optimum. The authors are currently proceeding with research on this.

2.10 Summary

Interest in the simulation of nonideal separations has grown in recent years and there has been considerable development in the understanding of the physical behaviour and separation mechanism for nonideal distillation. The first steps have been taken into the automation of the synthesis of nonideal distillation sequences.

The main motivation has been the need to improve the simulation and design performance, not only in terms of reliability but also in computing time. The behaviour of nonideal mixtures is only now being understood, in great part due to work from Doherty and his coworkers. The complexity of separation of nonideal mixtures requires careful handling in the calculation of the mixture's physical properties. The values change not only with operating conditions, such as temperature and pressure, but also with composition. The classical procedure in simulation is to keep updating the physical properties by means of rigorous VLE methods every time conditions change using parameters stored in a database. This is time

consuming and has prompted research into the development of local simplified models for calculation of physical properties. The model parameters have limited regions of validity, hence they must be used in a dual level calculation environment where parameter update is performed. Earlier work published in this area includes severe restrictions due to lack of generality for nonideal mixtures. Most work developed is directed towards dynamic simulation, with particular emphasis on the work published by Macchietto and coworkers. They developed robust local models and an effective parameter updating procedure that depends on the variation of the values from the previous rigorous evaluation. The parameter update also includes a 'forgetting' factor to discard out of date information.

More recent similar work has been developed by Hertzberg and coworkers, including a different type of error monitoring and update also geared towards dynamic simulation.

The emphasis on dynamic simulation is not only due to its importance in the study of process operation. It is also easier to obtain a robust algorithm for parameter update. Given the characteristics of a dynamic process one will expect changes in normal operating conditions to be smooth, unlike the steady state solution of a flowsheet where the final working conditions are not yet known and it is likely that the starting point in the calculations is far from the final conditions.

Johns and Vadhwana have also studied process separation flowsheeting, approximating dew point, bubble point, flash units and simple distillation by simplified models. They have produced an updating procedure including optimisation of the number of successive local calculations as a function of computing times for rigorous and local calculations, and an empirical parameter that gives a measure of the quality of the model. Perreguard also looked at steady state simulation. He uses approximate functions only in the calculation of the Jacobian, during the iteration procedure, whereas the actual physical property values are always calculated rigorously in the update.

Given the unpredictability in solving steady state flowsheets it is much harder to implement a parameter updating procedure for nonideal mixture separation. From one iteration to the next there can be extreme variations in operating conditions. A different kind of boundary of validity such as composition limits may be more adequate.

For a reliable nonideal distillation model, particularly where synthesis is considered, it is also necessary to look into issues such as feasibility and entrainer selection. Distillation sequencing is not always straightforward due to the existence of distillation regions within the equilibrium diagram.

Doherty and coworkers have contributed a great deal to the understanding of the equilibrium diagrams for ternary nonideal mixtures. This knowledge, even if still under development, allows further insight into separation feasibility, entrainer selection and calculation of variables such as minimum reflux ratio. The information and research are now being compiled and used to implement a synthesis package for nonideal distillation. The package relies in part on heuristics, such as rules on feasibility criterion. In their work the effect of a curved distillation boundary on separation feasibility has been ignored. Feasibility has also been studied by Stichlmair *et al.*, who used the infinite reflux calculation to quickly obtain areas of feasible products for ternary mixtures. Their work was extended by Wahnschafft *et al.*, who also investigated the effects of the distillation boundary to a greater extent. Unlike Doherty and coworkers they take advantage of the distillation boundary curvature. Previous studies by Doherty and coworkers had dismissed this topic with the argument that it would not be economically attractive and because questions exist on the stability and controllability of such processes. However the dynamic simulation study done by McKinnel [49] suggests such systems have a stable operation. Laroche *et al.* also provided more insight into feasibility of separation in their study on entrainer selection. In particular they studied the effect of the reflux ratio value in separation feasibility. They

showed how operation at infinite reflux may, in some cases, lead to infeasible separation, which will actually become feasible for some other finite reflux value.

The complete picture has not been fully drawn yet. The current knowledge on the behaviour of nonideal mixtures separation provides a good basis for the development of procedures and tools, with the aim of decreasing the intensive computing time required for these systems. Work to date has focussed on ternary mixtures, the most common case in industry. The complexity of behaviour increases greatly with the number of components in the mixture. Many nonideal multicomponent mixtures can, however, be reduced to a ternary mixture by removing first the components with behaviour close to ideal.

It is important to evaluate and understand the effect of using approximate physical properties in the calculations. The calculation of physical properties is a time consuming step but it is also fundamental to use reliable values in the simulation and synthesis of nonideal separation, otherwise we may fail to obtain results or they may not be trustworthy.

Chapter 3

Local Approximations for Liquid Activity Coefficient Functions

Interest in approximate methods for estimating physical properties in nonideal mixtures derives from the intense computing time required to maintain accurate values as conditions change during vapour liquid equilibrium calculations. In nonideal mixtures physical properties depend both on composition and operating conditions such as pressure and temperature. In the past experimental data has been used to fit parameters in mathematical models. These parameters are stored in databases such as PPDS [16]. They can then be used in VLE methods contained in the database to retrieve physical properties for components in a mixture at given conditions. The number of parameters and complexity of models used, particularly for three or more components, usually accounts for a great amount of computing time dedicated to physical property calculation during process simulation and synthesis.

As seen in chapter 2 considerable attention has been given to this subject in the past. Since a great percentage of overall computing time during process simulation is consumed in physical property calculation efforts have been made in terms of reducing this time. Reducing the time consuming step, i.e. the rigorous calculation of the physical properties, implies the development of local methods for

their calculation, thereby avoiding frequent calls to the rigorous physical property package.

The use of local models is constrained, particularly in the bounds of their applicability. As conditions change the model parameters must be updated when the region of validity has been exceeded. It is important to know when an update is required. Most work published in the past is directed towards dynamic simulation. The main reason for this is that parameter update is more straightforward, since changes in operating conditions normally occur gradually. Hence the pattern of change is more predictable and this makes implementing a parameter updating procedure an easier task. Johns and Vadhwana [24] and Perreguard [29] have addressed the issue of parameter update in steady state simulation. In the calculation of steady state operation the starting point of iteration is often quite different from the final converged solution. Greater variation is expected from iteration to iteration and this unpredictability makes it difficult to establish a parameter updating procedure. However, steady state calculations are very important in simulation and, particularly, in synthesis where many alternative flowsheets are evaluated.

Approximate models for the activity coefficient should be physically based. Nevertheless arbitrary models can also be used successfully in some cases as reported by Ponton and Klemeš [63]. In their study they make a comparison between different types of arbitrary functions, including Neural Networks, for inferential measurement of composition in ideal distillation and dynamic flash calculations. They also suggest an expression for liquid composition as a function of the component equilibrium constants.

In this chapter new local models are presented for component activity coefficients. These models are based on established correlations such as the Margules equation and Wilson method. The Margules equation is generalised for a multicomponent mixture under certain assumptions. Simplified versions of the

Wilson correlation are also proposed. The behaviours of these new correlations are analysed with several different nonideal mixtures.

The new equations presented were chosen for their relative simplicity when compared to other VLE methods for nonideal mixtures. Their structure makes them easy to fit and faster to use. As a result a compromise with accuracy must be made in order to decide on their applicability.

3.1 Considerations on Choice of Approximate Models

Physical insight into activity coefficient behaviour and existing models described in Reid *et al.* [11] show that functions for activity coefficients are highly nonlinear and must include interaction between the variables. The interaction between variables can be additive as in

$$a_0 + a_1x_1 + a_2x_2 + ... + b_1x_1^2 + b_2x_2^2 + ... + z_1x_1^n + z_2x_2^n + ... \tag{3.1}$$

It can also be polylinear as in

$$a_0+a_1x_1+a_2x_2+a_3x_3+...+b_1x_1x_2+b_2x_1x_3+...+c_1x_1x_2x_3+z_1x_1x_2...x_n+... \tag{3.2}$$

or include both terms from equations 3.1 and 3.2. This type of equation requires a great number of parameters, which increases factorially with the number of variables. Normally some considerations are made for the particular case that allow certain terms to be ignored, thus controlling the number of parameters to fit.

Another kind of equation which introduces nonlinearity and interaction between variables is that of a rational function [64]. The general form of a multivariable rational function is given by,

$$f(x_1, ..., x_n) = \frac{a_0 + a_1x_1 + a_2x_2 + ... + a_nx_n}{b_0 + b_1x_1 + b_2x_2 + ... + b_nx_n} \tag{3.3}$$

A function such as equation 3.3 provides nonlinearity in each variable and nonlinear intervariable interactions. Unlike the previous equations 3.1 and 3.2, the number of parameters in equation 3.3 increases only linearly with the number of variables.

The type of rational function shown in equation 3.3 has been used successfully in physical property calculation, such as boiling temperature [64]. Molecules were divided into their structural groups, e.g. C, CH, CH_2, CH_3, Cl and F, and these were used as variables in the rational function. Results were encouraging, but the number of components used was relatively small.

In section 3.3 two models are presented based on the Margules model for a binary mixture. The first provides only additive interaction between variables but the second also provides polylinear interaction. Sections 3.4 and 3.5 test two different kinds of rational functions. The data used for fitting the approximate models will be discussed in section 3.2.

3.2 Rigorous Physical Properties Calculation

Rigorous physical property data required in the calculations is retrieved from PPDS [16] through a FORTRAN interface developed locally by Lababidi *et al.* [65]. This interface retrieves up to eighteen constant properties for each component in a stream and up to twenty three variable properties, i.e. stream properties. It

also performs VLE calculations on streams. The existing options in PPDS [16] for VLE calculation methods are:

1. Redlich Kwong Soave
2. Wilson
3. UNIFAC
4. Peng Robinson
5. Redlich Kwong Soave with API modification
6. Lee Kesler Plöcker
7. UNIQUAC
8. UNIFAC for LLE

A description of each method can be found in Reid *et al.* [11], Prausnitz *et al.* [12] or in the PPDS manual [16]. Some of them have also been summarised in chapter 2. Redlich Kwong Soave, Peng Robinson and Lee Kesler Plöcker are used for mixtures with nearly ideal liquid phase behaviour and high pressure systems. The Wilson equation along with UNIFAC and UNIQUAC are used in systems containing polar components. The Wilson equation is not applicable for mixtures which form two liquid phases although it can be used when studying each liquid phase in isolation. UNIQUAC parameters are less dependent on temperature [11] when compared to Wilson equation parameters.

The VLE method to use in rigorous physical properties calculation will be very much dependent on the mixtures involved. Wilson and UNIFAC are the most adequate for the nonideal mixtures considered here and they will be used in this study.

3.3 Margules-like Models

Margules equations are empirical equations used for binary mixtures. The simplest equation is the two-suffix Margules equation, which originates from a simple relation for the Gibbs energy function:

$$g^E = a \cdot x_1 x_2 \tag{3.4}$$

where x_1 and x_2 are the component liquid molar compositions in the binary mixture and a is an empirical parameter determined from experimental measurements. Use of equation 3.4 is limited to simple mixtures, i.e. mixtures of components which are similar in size, shape and chemical structure. For nonideal binary mixtures an equation of higher order such as the three-suffix Margules equation is required. A higher order model has more parameters and hence the amount of experimental data points needed increases. Typical data in the literature [12] leads us to conclude that no more than two or three parameters are required so a three-suffix Margules equation is usually sufficient for the general case.

The three-suffix Margules equation for a binary mixture can be derived by assuming for component 1

$$\ln \gamma_1 = a x_2^2 + c x_2^3 \tag{3.5}$$

where a and c are empirical binary parameters. Then from the Gibbs Duhem equation the activity coefficient for component 2 is given by

$$\ln \gamma_2 = \left(a + \frac{3}{2}c\right) x_1^2 - c x_1^3 \tag{3.6}$$

Derivation and particulars can be found in pages 209-213 of Prausnitz *et al.* [12]. In order to generalise equations 3.5 and 3.6 for a multicomponent mixture they can be written for two generic components i and j as follows:

$$\ln \gamma_i = a x_j^2 + c x_j^3 \tag{3.7}$$

$$\ln \gamma_j = \left(a + \frac{3}{2}c\right) x_i^2 - c x_i^3 \tag{3.8}$$

For the binary case $x_i + x_j = 1$, hence equations 3.7 and 3.8 can be rewritten as

$$\ln \gamma_i = a\left(1 - x_i\right)^2 + c\left(1 - x_i\right)^3 \tag{3.9}$$

$$\ln \gamma_j = \left(a + \frac{3}{2}c\right)\left(1 - x_j\right)^2 - c\left(1 - x_j\right)^3 \tag{3.10}$$

In order to generalise equations 3.9 and 3.10 and eliminate x_j the parameters a and c must be transformed. Assuming for component i in equation 3.9 a parameter $B_i \equiv a$ the corresponding B_j in equation 3.10 will be given by

$$B_j = a + \frac{3}{2}c \tag{3.11}$$

From the newly defined B_i and B_j:

$$c = \frac{2}{3}\left(B_j - B_i\right) \tag{3.12}$$

Equation 3.12 gives a parameter expression for the cubic term of equation 3.7. Note that for equation 3.8 i and j exchange places but the constant is now $-c$

resulting in the same parameter expression for the cubic term. Hence the following expression can be written for a binary mixture of components i and j:

$$\ln \gamma_i = B_i (1 - x_i)^2 + \frac{2}{3} (B_j - B_i) (1 - x_i)^3 \tag{3.13}$$

Equation 3.13 can be made more general to enable its use for multicomponent mixtures by writing it as

$$\ln \gamma_i = B_i (1 - x_i)^2 + \frac{2}{3} \left(\sum_{j=1, j \neq i}^{n_c} B_j - B_i \right) (1 - x_i)^3 \tag{3.14}$$

Equation 3.14 is strictly valid for a binary mixture and could provide a generalisation for a multicomponent mixture with $n_c > 2$. Its form gives a convenient way of calculating the parameters. For a mixture of n_c components n_c equations can be written containing n_c parameters using equation 3.14, thus defining a linear system of equations of size $n_c \times n_c$ in terms of the unknown parameters. The number of parameters increases proportionally to the number of components. One set of rigorous data, i.e. one measuring point, is required to solve the system of equations regardless of the number of components in the mixture.

In equation 3.14 the activity coefficient for component i depends on its mole fraction only and dependence on other components in the mixture is not taken into account. However, particularly in nonideal mixtures, the influence of other component compositions usually plays an important role in the activity coefficient value. Equation 3.14 can be rearranged to include the composition of other components thus providing polylinear additive interaction as described by Ponton [64]. Rewriting equation 3.14 as

$$\ln \gamma_i = (1 - x_i)^2 \left[B_i + \frac{2}{3} (1 - x_i) \left(\sum_{j=1, j \neq i}^{n_c} B_j - B_i \right) \right] \qquad i = 1, ..., n_c \tag{3.15}$$

it can be further rearranged so that

$$\ln \gamma_i = (1 - x_i)^2 \left[B_i + \frac{2}{3} \left(\sum_{j=1, j \neq i}^{n_c} B_j (1 - x_i) - B_i (1 - x_i) \right) \right] \qquad i = 1, ..., n_c \tag{3.16}$$

and knowing that $1 - x_i = x_j$ for a binary

$$\ln \gamma_i = (1 - x_i)^2 \left[B_i + \frac{2}{3} \left(\sum_{j=1, j \neq i}^{n_c} B_j x_j - B_i (1 - x_i) \right) \right] \qquad i = 1, ..., n_c \tag{3.17}$$

Similarly to equation 3.14 equation 3.17 reduces exactly to equation 3.13 for a binary mixture. It provides, however, a different approximation from equation 3.14 for a multicomponent mixture. Both equations will be studied here to assess their suitability for multicomponent mixtures. This new approximation takes into account the composition of all components in the mixture in calculating the component activity coefficient.

For both equations 3.14 and 3.17 the parameters can be easily calculated with one measuring point only, i.e. one call to the rigorous physical property package. The data point is then used to solve the linear system of equations. They exhibit diagonal dominance and can easily be solved using Gauss Jordan [66].

3.3.1 Testing the Models

Equations 3.14 and 3.17 were tested using six different nonideal ternary mixtures shown in table 3.1.

Boiling points quoted are for 100 kPa in all cases and all data were calculated by PPDS using the UNIFAC VLE method. Tests were conducted at a pressure of 100 kPa and the ideal values for the equilibrium constants were calculated at a temperature of 347 K, except for mixture 2, which has a lower boiling range. In this

Mixture	Components	Boiling point (K)	Binary azeotropes (molar composition)	
1	1. water	373.15	0.103	-
	2. methanol	337.69	-	-
	3. ethanol	351.44	0.897	-
	Azeotrope boiling point (K)		350.86 (min.)	-
2	1. acetone	329.22	0.372	-
	2. chloroform	334.32	0.628	-
	3. benzene	353.24	-	-
	Azeotrope boiling point (K)		337.18 (max.)	-
3	1. acetone	329.22	0.579	-
	2. 2-methylpent-1-ene	335.25	0.421	-
	3. butane	272.65	-	-
	Azeotrope boiling point (K)		321.86 (min.)	-
4	1. ethylbenzene	409.34	0.555	-
	2. ethylene glycol monoethyl ether	408.15	0.445	0.371
	3. octane	398.82	-	0.629
	Azeotrope boiling point (K)		396.83 (min.)	385.64 (min.)
5	1. water	373.15	0.310	-
	2. ethylene glycol	470.69	-	-
	3. propan-2-ol	355.39	0.690	-
	Azeotrope boiling point (K)		353.02 (min.)	-
6	1. acetone	329.22	0.372	-
	2. chloroform	334.32	0.628	-
	3. toluene	383.78	-	-
	Azeotrope boiling point (K)		337.18 (max.)	-

Table 3.1: Sample nonideal ternary mixtures with data at 100 kPa.

case the temperature used was 337 K. Pressure was kept constant. The Wilson VLE method in PPDS did not have stored data for some components so any results retrieved from PPDS would be ideal in those cases. This would defeat the purpose of this study, hence the UNIFAC method was used throughout. Activity coefficients were calculated at the mixture's bubble point for each composition point at fixed pressure.

At this stage the objective is to find out if and how the parameters vary across the composition diagram. A gradual variation will justify the development of an updating procedure. Negligible variation ensures that only one fitting point is required and the equation can be used reliably for the whole composition region. Hence parameters have been calculated for the whole range of compositions using small steps of 0.025. The rigorous physical property package was used at each step to ensure that parameters obtained for each point give an accurate value for the activity coefficient.

Results have been plotted in tridimensional graphs showing the parameter for each component in the z axis. Scale has been kept between -300 and 100 to help with visualisation, although a few values exceed it.The x axis shows the composition of component 1 in the mixture and the y axis that of component 2. Hence the points in the surface lower triangular area to the left give the ternary diagram composition region, whereas the other triangular area is meaningless because it corresponds to an area of impossible composition, i.e. $\sum x_i > 1$. Figures 3.1, 3.2 and 3.3 show the variation in the parameters values for components 1, 2 and 3, respectively, in mixture 1 when equation 3.14 was tested. The parameters values remain fairly constant in small areas of the diagrams. There are great variations towards some central areas of the diagrams. The area around the azeotrope location is well behaved. But the parameters have a relatively large, although smooth, variation towards the pure component vertices. All parameters show a similar type of behaviour.

The same type of behaviour is found for mixture 2. In this case the azeotrope is

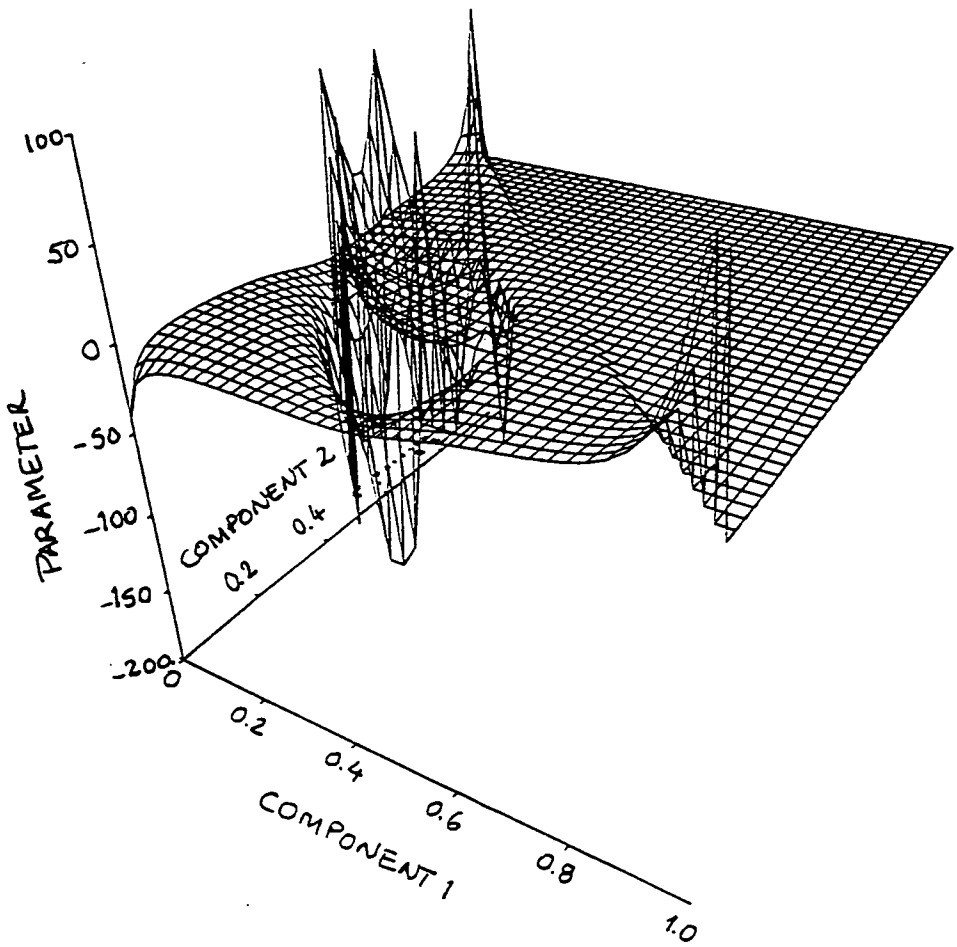

Figure 3.1: Variation in the parameter value of component 1 along the composition diagram for Mixture 1 with first Margules-like equation

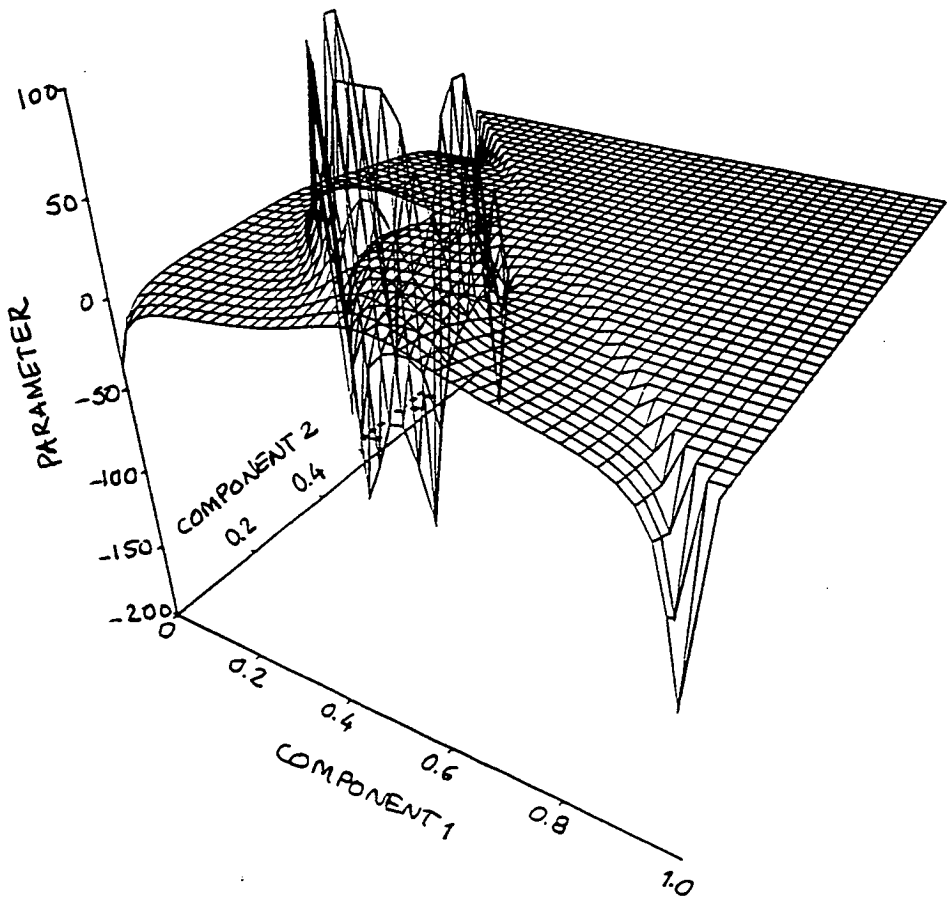

Figure 3.2: Variation in the parameter value of component 2 along the composition diagram for Mixture 1 with first Margules-like equation

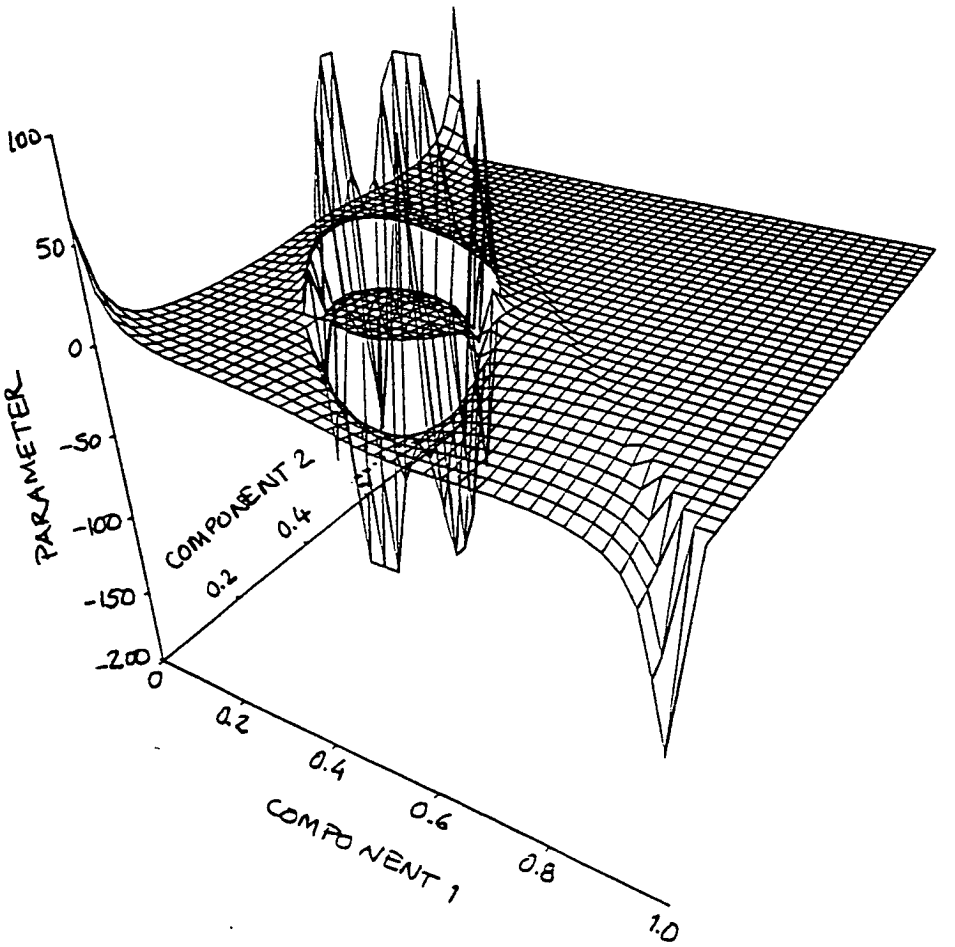

Figure 3.3: Variation in the parameter value of component 3 along the composition diagram for Mixture 1 with first Margules-like equation

located in neighbourhood of the point where changes in the parameters originate in a gradual way. The variation seen in the other mixtures was so large and unpredictable that the graphs can not be analysed properly.

The preferential boiling paths in mixture 3 are more complex and this is reflected in the unpredictability of parameter values for equation 3.14. This proved to be inadequate for mixture 3.

Mixture 4 contains 2 binary azeotropes and also a more complex boiling path diagram. This again reflects on the parameters values. The same conclusions are made as in the case of mixture 3. Equation 3.14 does not give good results for mixture 5 either. Parameter variation is irregular and happens throughout most of the ternary diagram.

Mixture 6 has small areas where the parameters remain fairly constant or vary smoothly. But the same effects appear as in the previous examples. Also as in previous cases parameters have a large, if smooth, variation towards the pure component vertices.

In all cases the largest and most unpredictable variations occur towards the centre of the diagram where all three components exist in appreciable amounts. The variation observed towards the edges, i.e. pure component vertices, is usually smooth and continuous. A parameter updating procedure would be easy to implement in this area given the continuity of the variation. The update would be a function of composition only for each temperature and pressure combination. However the great variation in the central area is impossible to correlate. Hence the use of equation 3.14 is limited to small areas in the diagram. The equation will also be limited to mixtures which do not show strong intermolecular dependency. The term that accounts for it is absent in this equation and it has proven to be important for this kind of mixtures.

Results obtained with equation 3.17 are more interesting. For mixture 1 they are shown in figures 3.4, 3.5 and 3.6. The parameter values remain fairly constant

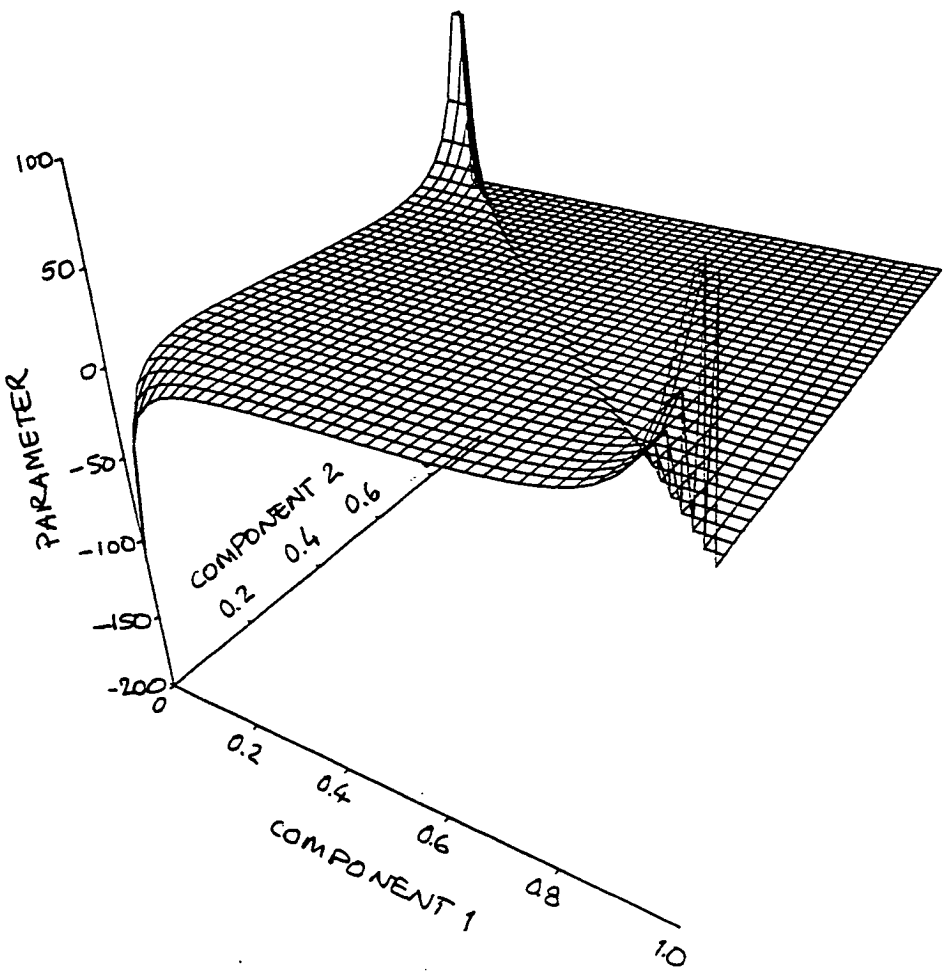

Figure 3.4: Variation in the parameter value of component 1 along the composition diagram for Mixture 1 with second Margules-like equation

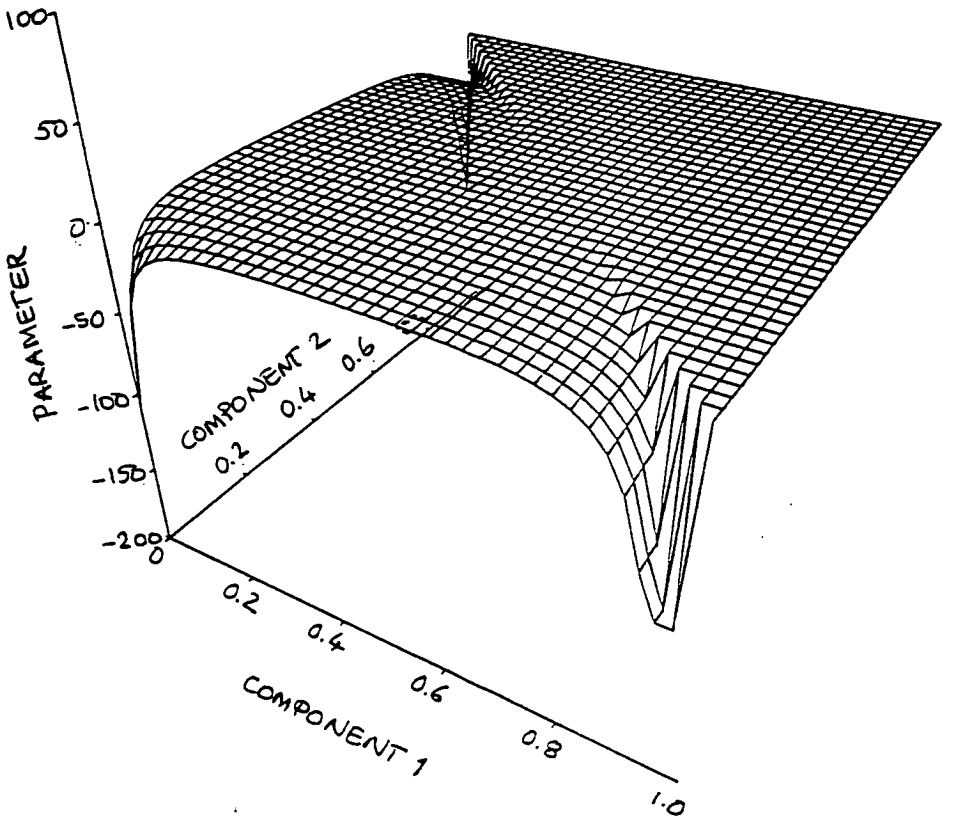

Figure 3.5: Variation in the parameter value of component 2 along the composition diagram for Mixture 1 with second Margules-like equation

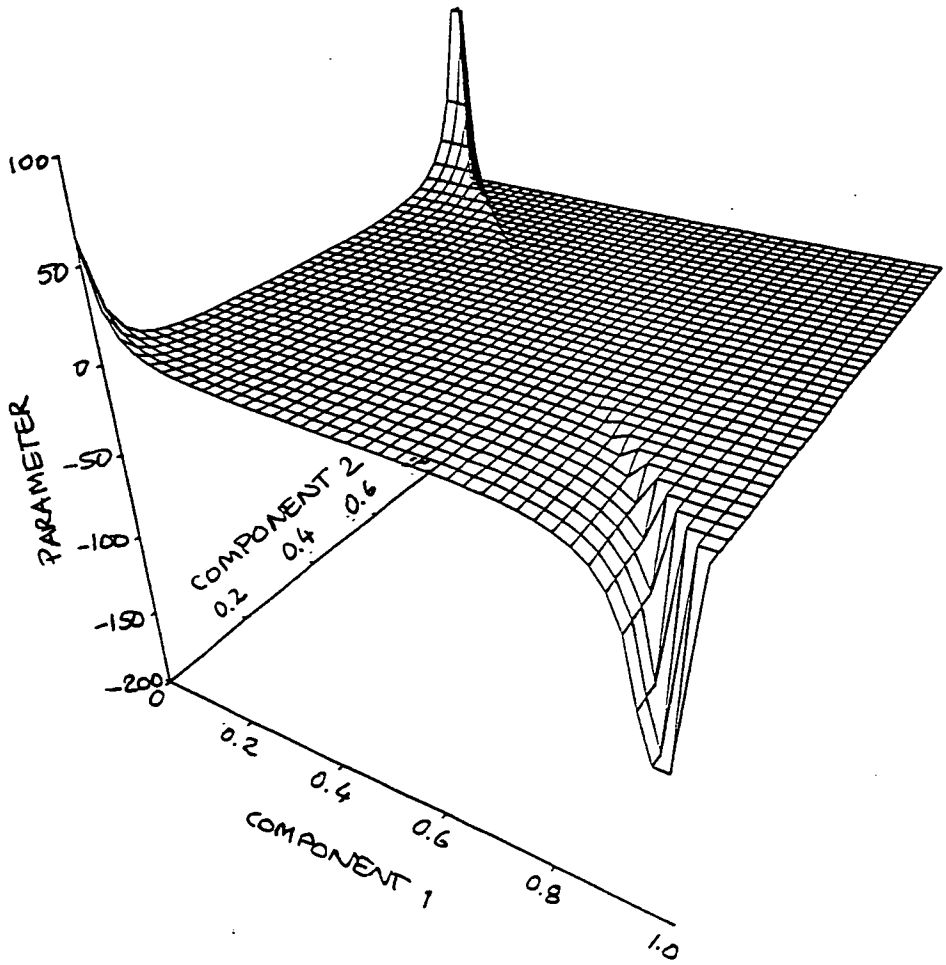

Figure 3.6: Variation in the parameter value of component 3 along the composition diagram for Mixture 1 with second Margules-like equation

throughout the entire composition region. However the same behaviour is found as in equation 3.14 in areas close to pure component vertices. Mixture 2 behaves similarly to mixture 1.

Mixtures 3, 4, 5 and 6, which had shown the greatest parameter variation with equation 3.14, now have a much improved behaviour with equation 3.17. They show a similar behaviour to mixtures 1 and 2 but there is a more marked asymptotic behaviour towards the pure component vertices.

Results obtained for equation 3.17 show the considerable improvement obtained by introducing a term to account for intermolecular dependency. For this small sample of six nonideal mixtures it performs well to concentrations up to 70%. Only one fitting point is required.

Parameter variation for compositions richer than 70% is fast and has an asymptotic form. An updating procedure is not worth considering. Given the variation rate it would have to be used repeatedly, greatly increasing the usage of the rigorous physical property package. It is more reasonable to switch to using the rigorous physical property package when the purity of the mixture with respect to one component exceeds a value of 80%.

3.4 Wilson-like models

The equation for the Gibbs energy proposed by Wilson for multicomponent mixtures is based on molecular considerations [12] and is given by

$$g^E = -RT \sum_{i=1}^{n_c} x_i \ln \sum_{j=1}^{n_c} x_j \Lambda_{ij} \tag{3.18}$$

where Λ_{ij} are the Wilson equation parameters. Using equation 3.18 in equation 2.10 to calculate the activity coefficient the following is obtained:

$$\ln \gamma_i = 1 - \sum_{j=1}^{n_c} \frac{x_j \Lambda_{ji}}{\sum_{k=1}^{n_c} \Lambda_{jk} x_k} - \ln \sum_{j=1}^{n_c} x_j \Lambda_{ij} \qquad i = 1, ..., n_c \tag{3.19}$$

Based on equation 3.19 a simpler rational function is proposed for the activity coefficient calculation, viz

$$\ln \gamma_i = 1 - \frac{A_i x_i}{\sum_{j=1}^{n_c} A_j x_j} \qquad i = 1, ..., n_c \tag{3.20}$$

where A_i, $i = 1, ..., n_c$ are parameters to be fitted and the x_i are the mixture's composition.

Equation 3.20 has a few desirable properties:

- it shows correct behaviour at $x_i = 1$, i.e. for pure component solutions;
- it contains n_c parameters requiring only one point fit;
- it introduces nonlinear representation and nonlinear interaction between parameters, while including only a reasonable number of nonlinear parameter terms.

A variant of equation 3.20 is

$$\ln \gamma_i = 1 - \frac{A_i x_i}{\sum_{j=1}^{n_c} A_j x_j} - \ln \sum_{j=1}^{n_c} \frac{A_j}{A_i} x_j \qquad i = 1, ..., n_c \tag{3.21}$$

Equation 3.21 is more similar in its structure to equation 3.19 than equation 3.20. Its more complex structure, however, makes it more difficult to fit.

3.4.1 Testing the Models

As suggested in Ponton [64] the standard NAG library procedure for nonlinear least squares [67] has been used. The procedure is readily available and is usually quite fast and reliable [64].

The equations were tested using the mixtures already described in section 3.3.1. The ternary diagram was divided into a grid of compositions at intervals of 2.5% and the equations fitted for each point in order to check the parameters' variation with composition.

During the fit of equation 3.20 for each point in the equilibrium diagram not all the parameters were successfully calculated. In some cases NAG returned a message saying that a minimum could not be found for the least squares. There were also cases where the denominator became close to zero causing the method to fail.

In conclusion, a good fit could not be obtained for the whole range of compositions with any of the example mixtures. Two possible reasons for this are:

1. The method used to calculate the parameters is ineffective.

2. The data can not be well represented by a function such as equation 3.20.

Analysis of the error between the activity coefficient calculated with the fitted data and the value retrieved from PPDS using the Wilson method leads to believe that equation 3.20 will not represent the data appropriately in any case. The error was greater than 20% for all cases.

It was not possible to obtain the parameters for equation 3.21 with the non-linear least squares method.

3.5 Rational fraction approximation to activity coefficient in flash calculations

A different approach to the use of rational functions in determining the liquid activity coefficient is to use them as a correction factor in a flash calculation. The factor is applied to the known feed activity coefficients. The function proposed here takes the form:

$$\ln \gamma_{i,l} = \left(\frac{A_0 + A_1 x_{i,f}}{1 + A_2 x_{i,f}} \right) \gamma_{i,f} \qquad i = 1, ..., n_c \tag{3.22}$$

where $\gamma_{i,l}$ and $\gamma_{i,f}$ are component i liquid activity coefficients, respectively, for the liquid output and feed. The mole fraction of component i in the feed is represented by $x_{i,f}$ and A_0, A_1 and A_2 are parameters. Equation 3.22 is basically an arbitrary function, containing three parameters: A_0, A_1 and A_2. Therefore its fitting requires three known rigorous equilibrium data points.

Hence, three points are chosen and the rigorous physical property package is used to obtain values for the components activity coefficients both for the feeds and respective liquid outputs. These values are used to fit the function which will then be used for any particular feed required. The fitting procedure includes a flash calculation for each point. At present the flash calculations allowed by the PPDS interface developed by Lababidi *et al.* [65] include calculations at fixed temperature and pressure only. However, to perform the study over the whole range of compositions in the ternary diagram it is more useful to fix the pressure and vapour to feed ratio, while flash temperature is calculated. Since this is impossible at the moment with the tools available it was decided to study the function behaviour in two ways:

- By varying the temperature for each composition point, choosing the average between bubble and dew points for the particular composition.

- By judging the function's behaviour in the composition area of the diagram where phase split occurs for fixed temperature and pressure.

It is expected that for the points calculated at different temperature from that used in the fitting a difference will be found between the rigorous values and those obtained by the correction model since no account is taken of temperature dependency. Calculation at fixed temperature and pressure should, however, give a measure of the function's performance in terms of composition dependence only.

The three parameters are calculated by solving the system of equations resulting from equation 3.22. In this work only ternary mixtures are considered so the system is easy and fast to solve, but the resulting system of equations is suitably solved for any number of components using the Gauss elimination method. The same mixtures described in section 3.3.1 were used here.

3.5.1 Testing the Model

There are several issues in the function fitting. The most important is how to go about choosing the fitting points. A first fitting was attempted by using three points in the middle area of the ternary composition diagram. Table 3.2 shows the compositions used for each point.

Point	Component 1	Component 2	Component 3
1	0.15	0.30	0.55
2	0.25	0.40	0.35
3	0.45	0.45	0.10

Table 3.2: First fitting set of molar composition points for each ternary mixture.

The results for the case where the flash temperature is varied with composition have been plotted using tridimensional graphs. Similarly to previous examples the x and y axis show the composition of components 1 and 2, respectively. The z axis shows the percentile relative error between the liquid activity coefficient calculated by PPDS and that calculated by the rational function, for each component in the mixture. The upper right triangular area in the graph corresponds to impossible composition combination and has no physical meaning. All these points have been set to zero.

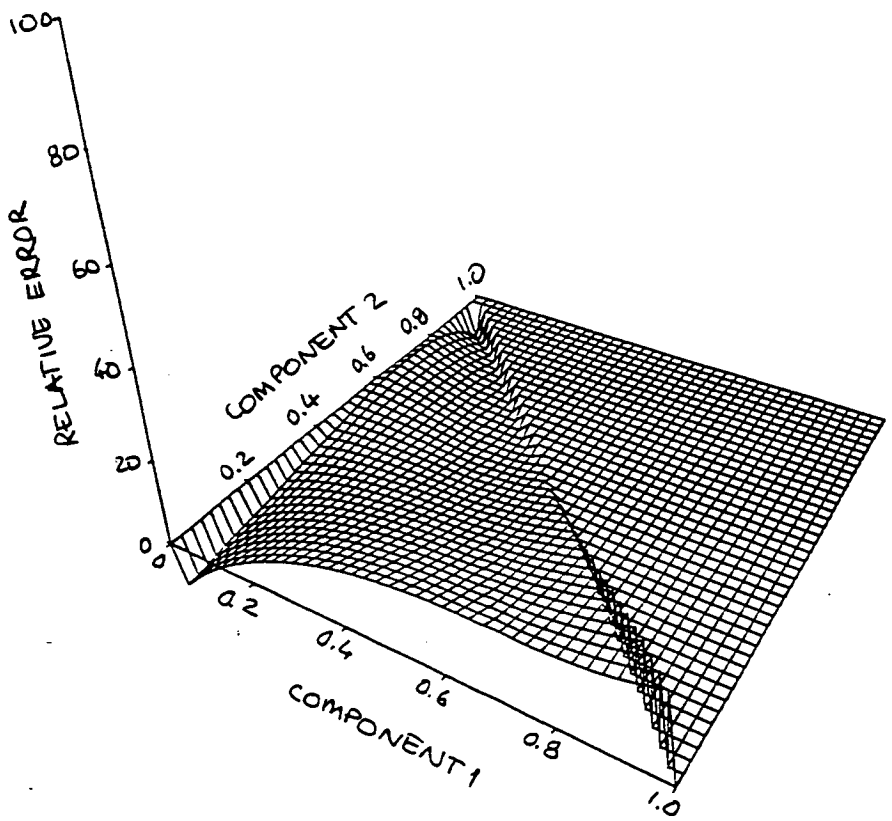

Figure 3.7: Relative error in activity coefficient for component 1 in mixture 2 along the composition diagram

Mixture 2 showed best results for all components as seen in figures 3.7, 3.8

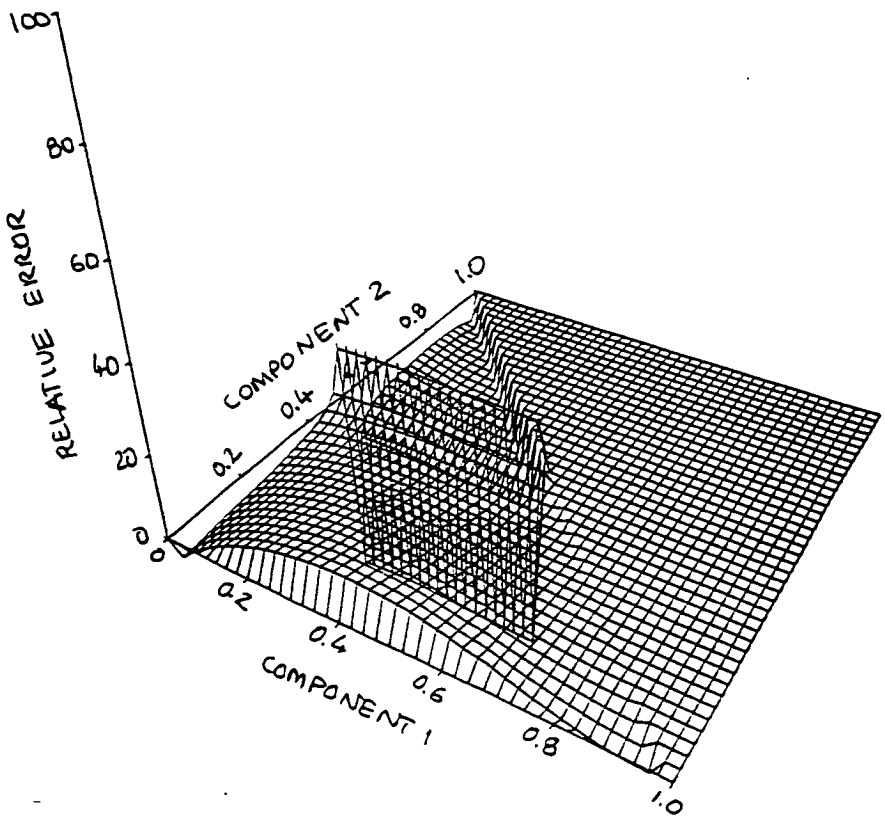

Figure 3.8: Relative error in activity coeffcient for component 2 in mixture 2 along the composition diagram

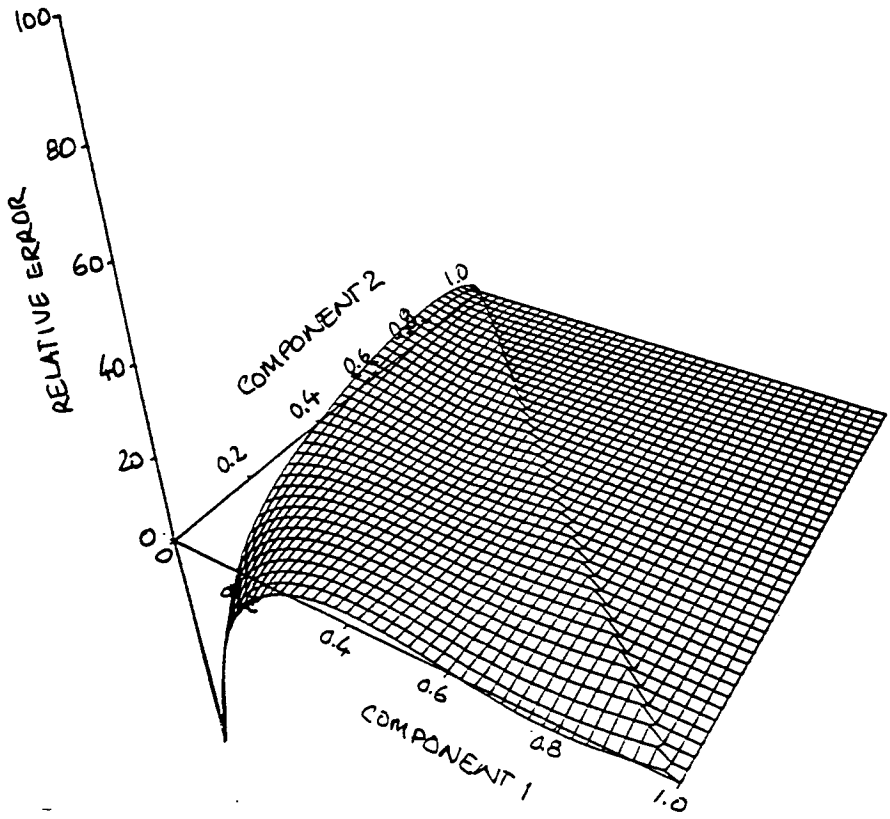

Figure 3.9: Relative error in activity coeffcient for component 3 in mixture 2 along the composition diagram

and 3.9. The other mixtures show great variations as well as large error values, including discontinuities in some cases.

The second case where the only points calculated were those found to have vapour liquid equilibrium at the fitting temperature and pressure showed little improvement. This case is not easy to visualise in a tridimensional graph because only a small area of the diagram is meaningful. But the error remained on a similar scale for mixture 1. It was, however, slightly smaller for the other mixtures although values up to 40% in relative error have been observed in some cases. It was also found that the fitting points must be carefully chosen in order that vapour liquid equilibrium is obtained for all of them at the same pressure and temperature conditions.

A second set of fitting points was tried as shown in table 3.3. These points are close to each component vertex and a similar behaviour was obtained for the error in all mixtures as with the first set of fitting points.

Point	Component 1	Component 2	Component 3
1	0.05	0.10	0.85
2	0.10	0.85	0.05
3	0.85	0.05	0.10

Table 3.3: Second fitting set of molar composition points for each ternary mixture.

The unpredictable discontinuities in the error make an updating procedure based on the error difficult to formulate. An attempt to divide the ternary diagram into areas was done and the fitting points for each area were chosen accordingly. Figure 3.10 shows how the diagram has been divided into four areas. The fitting points used are shown in table 3.4. No further improvement was found in function behaviour using this system.

	Subset 1			Subset 2		
Point	Cmpt. 1	Cmpt. 2	Cmpt. 3	Cmpt. 1	Cmpt. 2	Cmpt. 3
1	0.85	0.05	0.10	0.45	0.50	0.05
2	0.55	0.10	0.35	0.05	0.85	0.10
3	0.50	0.45	0.05	0.10	0.55	0.35
	Subset 3			Subset 4		
1	0.45	0.05	0.50	0.45	0.45	0.10
2	0.05	0.10	0.85	0.05	0.50	0.45
3	0.10	0.35	0.55	0.55	0.05	0.40

Table 3.4: Third fitting set of molar composition points for each ternary mixture including 4 subsets.

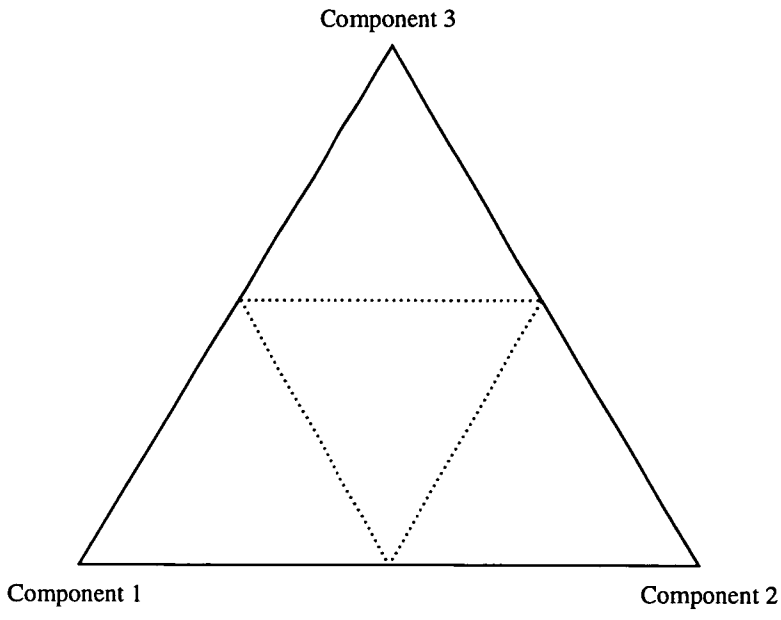

Figure 3.10: Ternary diagram division into four areas for parameter fitting

3.6 Conclusions

Best results were obtained when using the Margules-like equation 3.17. The good interdependency of parameters obtained by the equation structure causes the parameters to remain approximately constant across the equilibrium surface, except near the vertices when one of the component's composition is greater than 80%. The difference between equations 3.14 and 3.17 is that activity coefficients become explicitly dependent on the composition of other components in the mixture in the latter equation. In the area of compositions close to pure components' vertices the parameters vary quickly, though smoothly. In these areas the parameters require updating. However the ratio of change in the parameter values is so fast that almost constant updating will be required, therefore greatly increasing the time consumed in the calculation of the physical properties. As discussed in chapter 2 this will become ineffective and it will be preferable to use the rigorous physical property package instead of the simplified model for concentrations greater than 70% in one component.

The simplified Wilson-like equations failed to perform satisfactorily. The fit obtained for equation 3.20 using least squares was not adequate for any of the example mixtures. The relative error between the rigorous value at each point and that calculated with the fitted equation was large in all cases. Equation 3.21, a more complex version than equation 3.20 could not be fitted using least squares.

All equations discussed above required one rigorous set of values only. The Margules-like equation 3.17, in particular, is linear in the parameters, so it can be fitted easily. These features make it convenient to use, since only one fit is required for the whole range of compositions in the diagram, excluding the areas of composition where the purity is greater than 70%.

The last equation studied is a completely arbitrary function represented by

equation 3.22. It assumes that a correction can be made on the feed activity coefficient in a flash calculation. This correction is of the form of a rational function, containing three parameters and depending on the feed composition. Three rigorous data points are required for fitting in this case. Several different sets of points were experimented with, including subsets belonging to predefined subregions. The prediction of the liquid activity coefficient obtained was poor in most cases.

The only flash model available through the PPDS interface used requires both temperature and pressure to be given. Hence the study of the function behaviour across the composition diagram was done for variable temperature to ensure that, for each point in the diagram, there was vapour liquid equilibrium at the working conditions. There is no temperature term in equation 3.22 to account for temperature variation. Its inclusion would increase the number of parameters in the function and, as a consequence, the number of rigorous data points required in fitting. However it is only worth considering it if this type of arbitrary function can prove to provide a good fit at constant temperature. Results obtained when temperature was kept constant show the method proposed is not suitable. The same conclusion holds when the equilibrium diagram composition area is divided into smaller regions to be fitted separately.

Although reasonable results were achieved with equation 3.17 it is evident how difficult it is to obtain a reliable function to fully describe the component activity coefficients in nonideal mixtures. The main difficulty arises from the extreme changes in nonideal mixture properties with composition. These systems are usually complex in terms of interaction between components in the mixture and strongly dependent on composition. This also explains why a more arbitrarily based equation such as a rational function correction used in section 3.5 is not successful. Equation 3.17 has the advantage of being easy to fit and able to be used throughout the composition diagram, except where the concentration of one

of the components is greater than 70%. Only one call to the physical property package is required to fit the parameters.

Chapter 4

Local Approximations for Flash Models in Flowsheet Solution

The conventional way of performing an isothermal flash calculation using a rigorous physical property package, such as PPDS [16] is to simply input feed data, i.e. flow and composition, and the operating conditions, i.e. temperature and pressure. PPDS will make use of stored rigorous physical property data to calculate the flash output for given data. This can be time consuming, particularly for nonideal mixtures.

One possible way to reduce computing time is to use simplified functions to approximate liquid activity coefficients in a rigorous vapour-liquid equilibrium model as proposed in chapter 3.

Simplified functions are intended to replace calculations done by the rigorous physical property package by approximating the liquid activity coefficients. As shown in chapter 3 it is difficult to find an approximate function and maintain the accuracy of its parameters for the full range of compositions in the ternary diagram. It is important to include physical considerations since purely arbitrary functions are likely to fail with complex mixtures.

In this chapter instead of approximating physical properties only, whole unit models for isothermal vapour-liquid equilibrium calculations are approximated

with the same intent of reducing computing time in vapour liquid equilibrium calculation for nonideal mixtures. These models are incorporated in a modular flowsheeting program and retrieve all required physical data from the rigorous physical property package. Local models can interact with the rigorous physical property package in a dual level flowsheeting environment.

In this chapter two different ways of using dual level flowsheeting are presented and analysed: parallel and inside-out methods. The inside-out method has been used successfully before [18]. Both methods make use of approximate physical property calculations, using the rigorous physical property package for a bubble point calculation only.

The isothermal flash unit assumes constant relative volatilities are given as input data. Hence, the flowsheet material balance is performed in one calculation level assuming constant physical properties. The physical properties are calculated in a different level by an approximate method. Along with the given temperature and pressure the method approximates physical properties for the latest material balance compositions, as calculated in the other level. Calculations can be done in parallel, i.e. the material balance and physical property levels are converged simultaneously always using the most up to date values for each level, or using an inside-out structure. In the latter case the physical properties are calculated in one level for current values of material balance, then used in an inner level that converges the material balance. The newly converged material balance values are then used in the outer level where the physical properties are again recalculated and checked for convergence.

A further approximation presented in this chapter is a structural evolution approach. The approach uses the techniques mentioned, i.e. the parallel or inside-out approaches, but starts with a simplified flowsheet including fewer units than the original. As the simpler flowsheet converges more units are added and the procedure is repeated until the complete flowsheet is solved.

The behaviour and efficiency of each arrangement will be tested against the conventional approach in which the isothermal flash is calculated completely by the rigorous physical property package. This is illustrated with the Cavett problem described by Rosen and Pauls [68] and by Westerberg *et al.* [3].

4.1 Isothermal Flash Calculation

The study of the behaviour of different methods is analysed for isothermal flash calculation. The mass balance for an isothermal flash is given by

$$x_{i,f} = \frac{V}{F} y_i + \left(1 - \frac{V}{F}\right) x_i \qquad i = 1, ..., n_c \tag{4.1}$$

where $x_{i,f}$ is the mole fraction of component i in the feed, x_i and y_i are the liquid and vapour mole fractions of component i, respectively, and V/F the vapour split ratio in the feed. Replacing y_i with equation 2.8 gives:

$$x_{i,f} = x_i \left(\frac{V}{F} k_i + 1 - \frac{V}{F}\right) \qquad i = 1, ..., n_c \tag{4.2}$$

Defining the relative volatility, $\alpha_{i,j}$, between two components i and j as

$$\alpha_{i,j} = \frac{k_i}{k_j} \tag{4.3}$$

equation 4.2 can be re-arranged to

$$x_i = \frac{x_{i,f}}{\frac{V}{F} k_r \alpha_{i,r} + 1 - \frac{V}{F}} \qquad i = 1, ..., n_c \tag{4.4}$$

where r is a chosen reference component. The vapour mole fractions can then be calculated by

$$y_i = k_r \alpha_{i,r} x_i \qquad i = 1, ..., n_c \tag{4.5}$$

Equations 4.4 and 4.5 can be used to calculate the flash outputs by specifying either the equilibrium ratio of a reference component r in the products, k_r, or a fixed split ratio, V/F. One of these two variables must be specified and the other can then be calculated since the vapour-liquid equilibrium is bounded by the bubble and dew points.

As the sum of both the liquid and vapour mole fractions must be equal to 1 the following condition can be used to check when convergence of previous equations has been achieved,

$$\sum_{i=1}^{n_c} x_i - \sum_{i=1}^{n_c} y_i = 0 \tag{4.6}$$

Equations 4.4, 4.5 and 4.6 are used to set up a flash module requiring as input the feed's total flow and composition, pressure, relative volatilities, and either a reference component equilibrium constant or a fixed split ratio. The outputs will be the vapour and liquid streams and either the fixed split ratio or the reference component equilibrium constant.

The relative volatility of the components in the mixture is not known initially, hence an estimate must be calculated before the flash material balance is solved. An updating procedure for the physical property estimates must be implemented in order to converge the flash model. Updating is done in a dual level environment. In one level the physical properties are evaluated and in the other the flash material balance is solved. Overall convergence is achieved when both levels converge simultaneously. The next section illustrates different ways of using a dual level flowsheeting environment.

4.2 Approaches for Flowsheet Solution

In this section different methods for flowsheet solution are described. The first is the conventional approach where rigorous physical properties are used throughout the flowsheet calculation. The other approaches are alternative dual level flowsheeting environments making use of approximate physical properties in the flash model.

Conventional Approach

The conventional approach is a single level method used commonly in process flowsheeting. Physical property calculations are performed solely by the rigorous physical property package. The rigorous package is called from within the module containing the flash calculation, retrieving equilibrium conditions. This approach is used to evaluate the performance of the dual level approaches proposed below.

Parallel Method

In the parallel method the rigorous physical properties package is used to perform a bubble or a dew point calculation on the liquid or vapour output streams, respectively, instead of the full vapour liquid equilibrium calculation on the feed stream as in the conventional approach. The bubble or dew point results are then used in the flash calculation in conjunction with an ideal correction for the flash operating conditions which will be explained in more detail in section 4.3.

The method relies on the difference between the speed of calculation by the rigorous physical property package of the bubble or dew point and that of the whole flash. The compromise is the additional number of flowsheet iterations required by using approximate physical properties.

In the parallel method the flowsheet is solved by calculating both physical properties and material balance simultaneously. This ensures that the most recent approximations are used in both calculation loops, i.e. it is not necessary to converge one loop completely before the other variables can be calculated. In normal calculation for each flash model the equilibrium physical properties are initialised, usually by approximating them to the feed's. The material balance for the whole flowsheet is then calculated based on this approximation and the new values obtained for the flash output flows are now used for a new update in the physical property calculations. Hence there are two loops in parallel, one converging the physical properties and the other converging the material balance. The calculation keeps moving from one loop to the other every time a new update is generated. It stops when overall convergence has been achieved.

Inside-out Method

The same approximation for the physical properties is used as in the parallel method, i.e. the rigorous physical properties package is used to perform a bubble or dew point calculation only. However, in this case, the two loops of calculation, i.e. the physical properties and the material balance, are converged separately. Once an approximation is obtained for the physical properties, it is used to converge the material balance loop. Once convergence has been achieved the new flowsheet flows are used to approximate new physical properties. The cycle repeats itself until the physical properties loop has converged.

The material balance loop is the inner loop because it is converged within the physical properties loop, which hence is the outer loop.

This idea has been successfully used in vapour-liquid equilibrium calculations by Boston and Britt [18], as mentioned in chapter 2.

Structural Evolution Method

In the structural evolution method there is a level of calculation in which a flowsheet is 'grown' to its full size. Calculation starts with a simpler flowsheet which will be a sub-flowsheet of the one to be solved. Once the simpler flowsheet is successfully converged, a unit is added, the flowsheet once again converged and the procedure repeated until the full flowsheet is represented and fully converged. The level in which each flowsheet is solved can use any of the methods described above. Figure 4.1 shows the procedure schematically and appendix B shows an example of the application of this method to the Cavett problem. The choice of an appropriate initial flowsheet depends on the units contained in the whole flowsheet. Normally one would consider starting with a single unit and more could be added as the flowsheet converges for each configuration. It may, however, not always be possible or advantageous to start with just one unit, particularly if that does not include any recycle streams. It is also important to consider arrangements where the flowsheet evolution does not involve any abrupt changes in working conditions of the units already considered. Both the physical properties and stream component flows will have, at that stage, a good approximation to their final values in the complete flowsheet. This enables convergence to occur faster and more smoothly. It also means the number of iterations will be considerably reduced when more units are being calculated, reducing the amount of time spent calculating the full flowsheet.

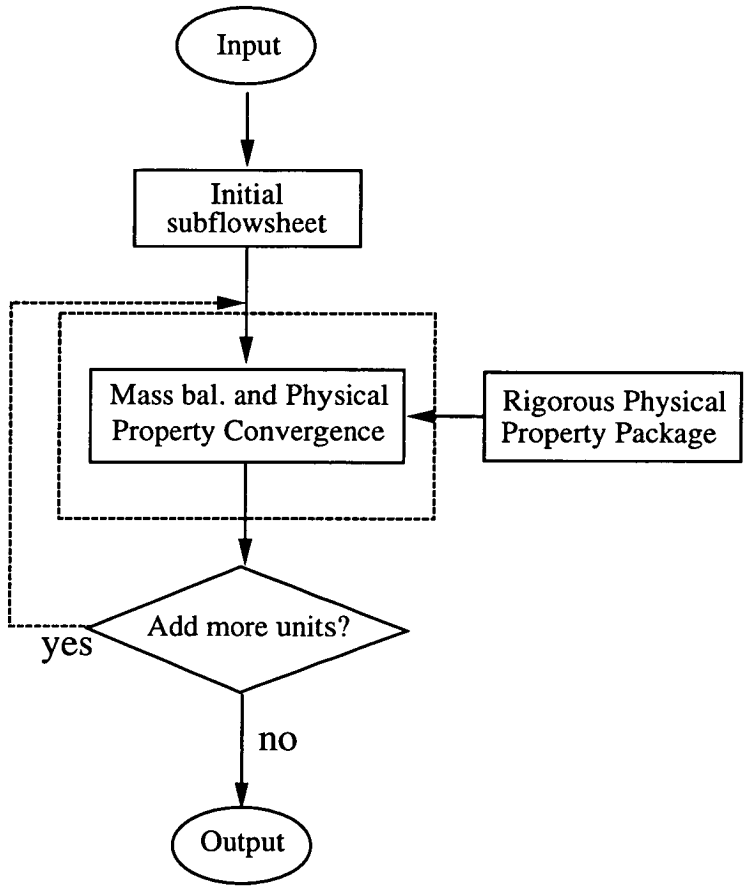

Figure 4.1: Structural evolution method diagram.

4.3 Flash Modules

The models developed are written in FORTRAN in a modular form, enabling their easy addition to a modular flowsheeting package. At present they are tested in the flowsheeting package ESSPROS [69].

ESSPROS is a package of simple units that uses sequential modular simulation of chemical processes doing material balance calculations. No energy balances are available yet. ESSPROS is a package built for teaching purposes, but its use and capability can be increased if linked to other existing packages. It is written in FORTRAN. At the moment the operations available in ESSPROS are:

1. Stream operations: definition, loading, storing, creating and deleting.

2. Unit operations: mixers, splitters, simple flash for ideal mixtures, reactors and separators.

3. Iteration which uses direct substitution and has now been extended with the Wegstein acceleration method and damped substitution.

Program construction in ESSPROS is simple. As it is built in modular form, it consists of a series of calls to relevant subroutines containing models, stream setting, definitions, recycling and printing instructions. The following is an extract from a typical code for a flowsheet containing a flash with a recycle as shown in figure 4.2.

```
nc = 7
codestring = '57,9,8,11,10,56;'
compnames = 'propane,1-butene,butane,2t-butene,2c-butene,pentane;'
feedflows = '10.0,15.0,20.0,20.0,20.0,10.0;'
initrecycle = '0.5,1.5,6.0,6.0,6.0,4.5;'
```

```
maxiters = 100
ppdsstream = 'flashstream'
vlemethod = 3
splitfraction = 0.5

call set nc(nc)
call setcodes(codestring)
call setnames(compnames)
call feed(1,feedflows,t,p)
call recycle(6,initrecycle,t,p)
call setiterations(maxiters)

call start iteration
do
   call mixer(1,6,2)
   call ppdsseparator(2,4,3,ppdsstream,t,p,vlemethod)
   call splitter(3,5,6,splitfraction)
   uncvgstreams = unconverged()
   if (uncvgstreams <= 0) exit
end do

call reportstreams
```

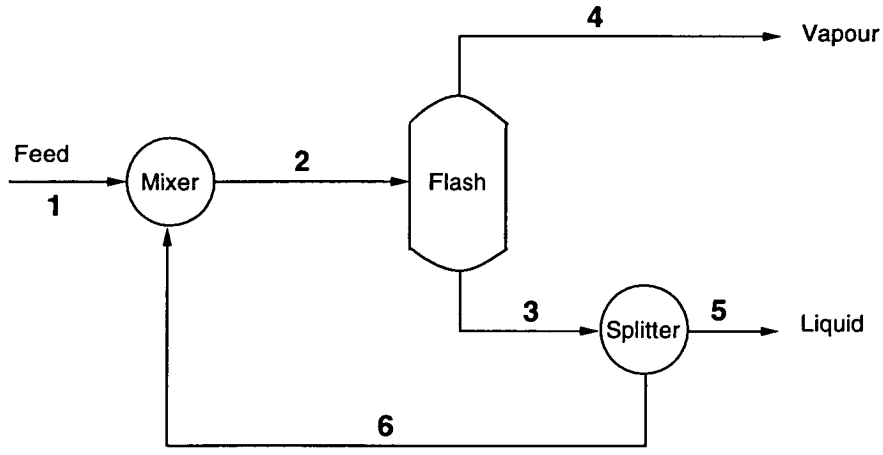

Figure 4.2: Simple flowsheet diagram of flash with recycle.

4.4 Physical Property Calculations

The physical property data required for the calculations are retrieved from PPDS through a FORTRAN interface developed by Lababidi *et al.* [65]. This interface is used to link the flowsheeting program containing simple units to a comprehensive database from which physical properties can be easily retrieved and used in flowsheet calculations.

There are several ways of solving an isothermal flash using the tools described above. PPDS performs an isothermal flash on a stream given its composition, temperature and pressure. This is an effective general way of solving an isothermal flash since the user only needs specifying the appropriate VLE calculation method. This type of calculation corresponds to the conventional method described in section 4.2.

In dual level flowsheeting, however, flash equilibrium compositions are calculated in local models developed for ESSPROS. In this case the flash will be solved by ESSPROS rather than PPDS. However the required physical data will be provided by PPDS. The new ESSPROS models are based on relative volatil-

ities. For a nonideal mixture the flash is solved using a PPDS bubble or dew point calculation on the liquid or vapour output streams, respectively. Thus multicomponent data are obtained and approximated to the flash operating conditions.

The approximation is done via an ideal correction on the reference component equilibrium constant rigorously estimated at bubble or dew point conditions. The reference component equilibrium constant, k_r, at flash conditions is then approximated via

$$k_r = \frac{P_{bp}}{P} k_{r,bp} \tag{4.7}$$

where P_{bp} is the bubble point pressure and $k_{r,bp}$ is the equilibrium constant for the reference component at bubble point.

Equation 4.7 is derived from an ideal approximation of equation 2.8 assuming the activity coefficient equal to unity. The value obtained for k_r is then used in the flash model to calculate the material balance and the vapour split ratio with the relative volatility values.

In this study the bubble point calculation from PPDS was used since the dew point did not seem entirely reliable. Nevertheless in principle either calculation can be used in the models.

4.5 Case Studies

4.5.1 The Cavett Problem

The Cavett problem has been used in the past for studying convergence of acceleration methods, e.g. by Rosen and Pauls [68] and Westerberg *et al.* [3]. It will be used here to compare the performance of the parallel, inside-out and structural evolution methods described in section 4.2, against the conventional method

described in the same section. The flowsheet of the Cavett problem and the corresponding block diagram for ESSPROS are shown in figure 4.3. It consists of a series of four flash units where the liquid product stream of each flash is used as an input to the next flash unit. The vapour product is part of the input to the previous flash. The feed to the system is mixed with the liquid output from the first flash and vapour output from the third flash and then fed into the second flash. Products are the vapour output of the first flash and the liquid output of the last flash.

From the description above it becomes clear that this problem has a structure similar to a four stage distillation column, with the feed coming into the second stage from the top. For such a structure there is more than one possible recycle configuration depending on the tear streams chosen, as can be seen in figures 4.4 to 4.8. Rosen and Pauls [68] studied recycle configurations corresponding to figures 4.4, 4.5, 4.6 and 4.7. Westerberg *et al.* [3] use the configuration in figure 4.8 by tearing streams 4 and 8.

The original Cavett problem uses a mixture of 16 components as described in table 4.1. The table shows results obtained by Rosen and Pauls [68] translated to SI units. It was not possible to retrieve the original paper published by Cavett, but in Motard and Westerberg [70] it is confirmed there is a typographical error in the original article by Rosen and Pauls. They believe the light product should contain 2383.2 lb-mole/hr of ethane as opposed to the 2883.2 lb-mole/hr presented in the paper. Bearing this in mind the results can still be used to draw conclusions. Rosen and Pauls [68] used FLOWTRAN and its physical property program, PROPTY, in their calculations. They studied the first and fourth recycle configurations mentioned above. FLOWTRAN took 54 iterations to converge the first configuration in figure 4.4 by direct substitution, whereas the fourth configuration in figure 4.7 took 73 iterations. Rosen and Pauls tried using Wegstein acceleration every iteration on both decompositions but the error value oscillated. When Wegstein acceleration method was used every fourth iteration the first configuration

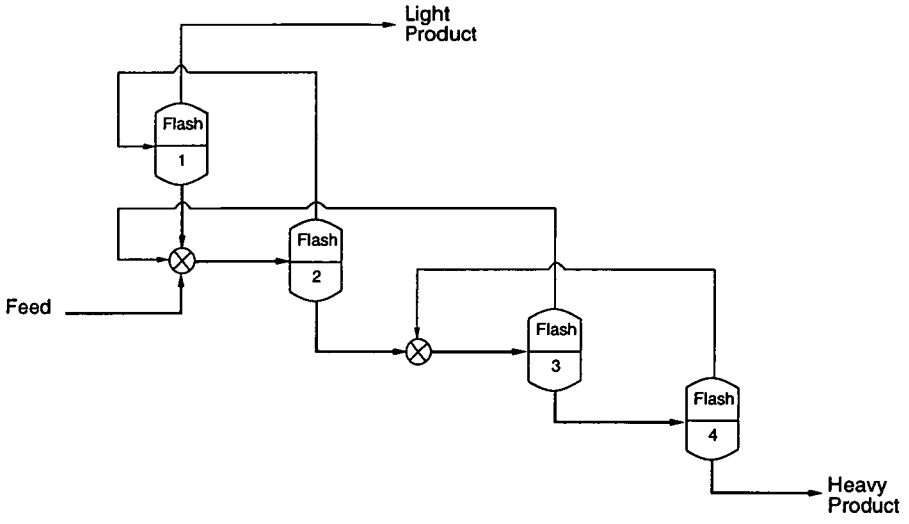

(a) Flowsheet diagram.

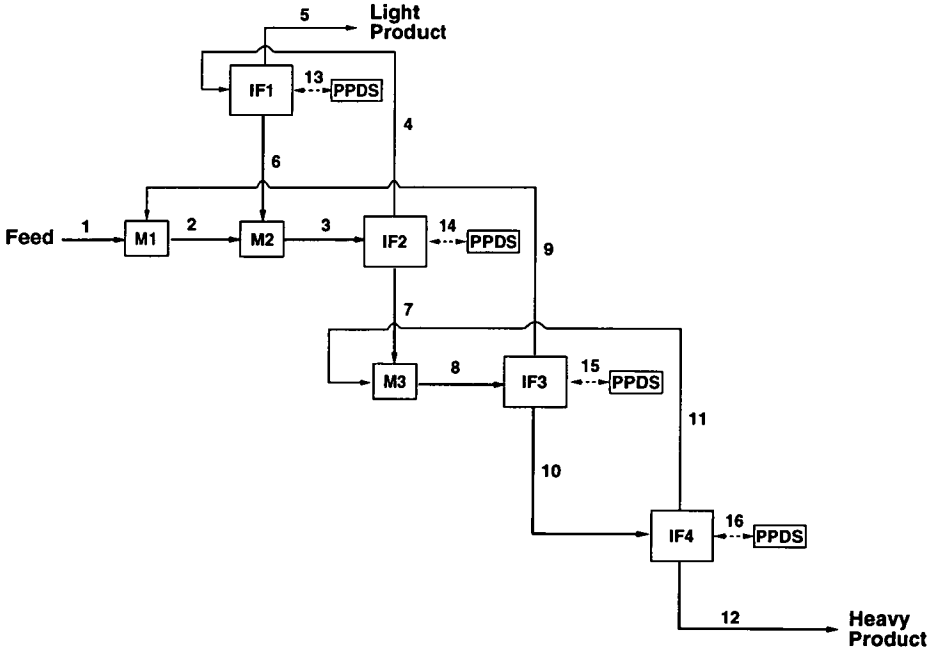

(b) ESSPROS diagram

Figure 4.3: Cavett Problem.

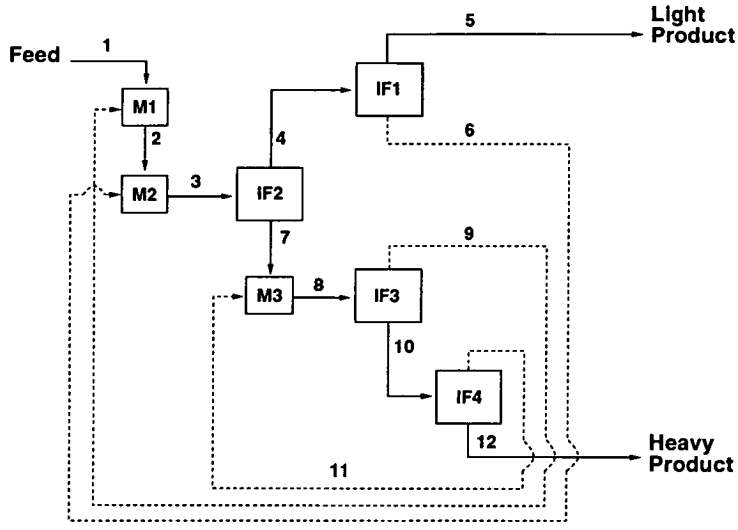

Figure 4.4: Recycle configuration using streams 6, 9 and 11

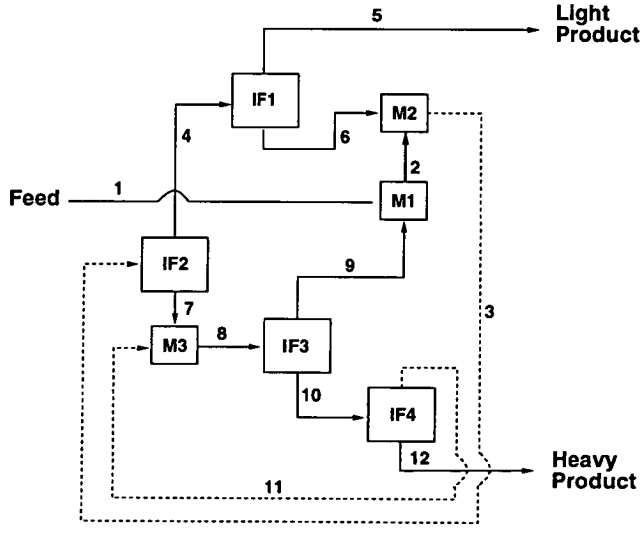

Figure 4.5: Recycle configuration using streams 3 and 11

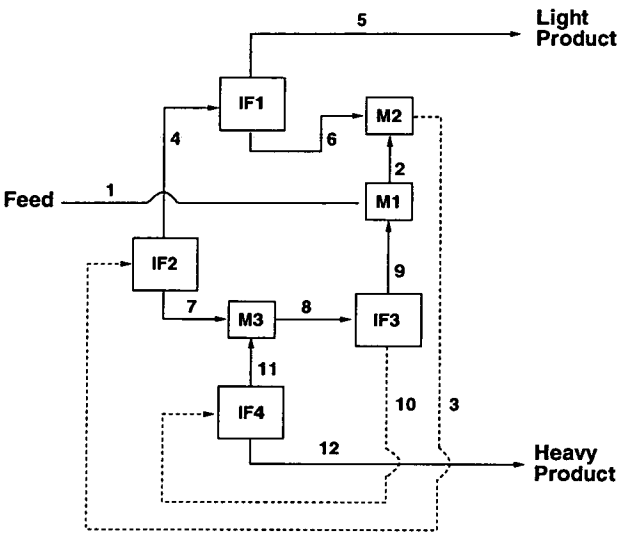

Figure 4.6: Recycle configuration using streams 3 and 10

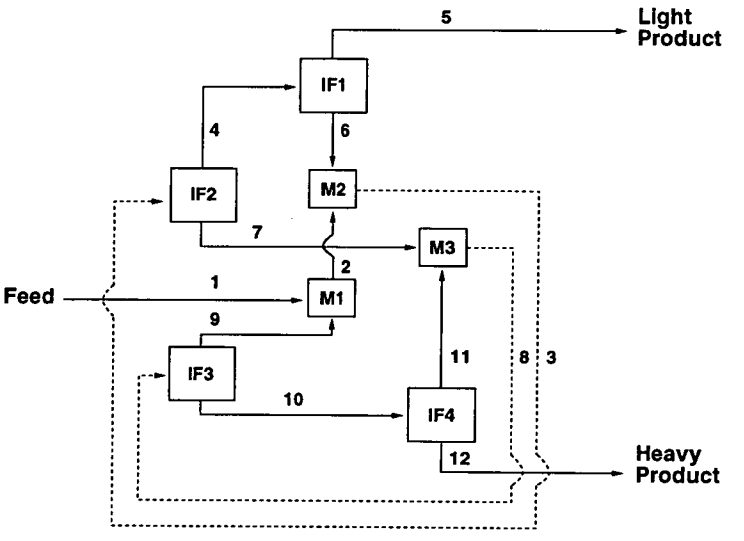

Figure 4.7: Recycle configuration using streams 3 and 8

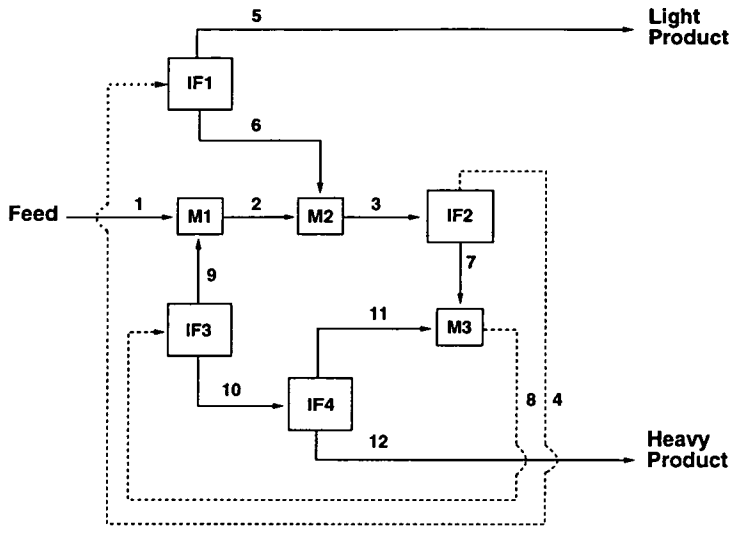

Figure 4.8: Recycle configuration using streams 4 and 8

converged after 23 iterations. The second configuration converged in 48 iterations when acceleration was applied every fifth iteration, although the convergence curve was irregular.

Westerberg *et al.* [3] applied the secant method to this example with different acceleration steps using a recycle configuration with streams 4 and 8, as shown in figure 4.8. Their aim was to test the performance of the secant method when not using lower bounding. The secant method failed to converge the recycle configurations used by Rosen and Pauls [68]. Their best results were obtained for delayed secant method without lower bounding applied every eighth iteration step. In this case the flowsheet converged after 23 iterations.

In the present study the Cavett problem structure was used with several mixtures to test the dual level models proposed and their applicability. First the original 16 component mixture was studied. The results obtained by the different models were compared and a comparison was also done with the results from Rosen and Pauls and also Westerberg *et al.* Then a three component system of water, methanol and ethanol and a nonideal mixture of seven components with different characteristics were used to test the models.

	moles/s			Equilibrium constants at solution			
Component	**Feed**	**Light**	**Heavy**	**Flash 1**	**Flash 2**	**Flash 3**	**Flash 4**
N_2	45.23	45.23	0.000011	5.94	24.6	149.7	620.8
CO_2	626.97	626.86	0.60	1.51	4.64	21.1	72.3
H_2S	42.85	42.26	0.66	0.89	2.03	8.28	27.1
Methane	378.22	378.32	0.02	3.09	10.3	52.9	200.1
Ethane	302.46	364.04	1.83	1.0	2.66	11.2	39.3
Propane	289.27	239.79	51.04	0.502	0.943	3.29	10.8
Isobutane	76.28	25.03	51.81	0.31	0.445	1.34	4.22
n-Butane	194.43	37.8	157.50	0.246	0.342	0.99	3.07
Isopentane	99.8	4.70	95.19	0.155	0.164	0.417	1.22
n-Pentane	142.66	4.39	138.25	0.126	0.132	0.327	0.944
n-Hexane	222.82	1.33	221.54	0.064	0.051	0.107	0.290
n-Heptane	329.13	0.47	328.69	0.035	0.022	0.039	0.101
n-Octane	232.89	0.069	232.83	0.017	0.008	0.013	0.033
n-Nonane	210.73	0.015	210.72	0.009	0.004	0.005	0.012
n-Decane	105.01	0.002	105.01	0.005	0.002	0.002	0.004
n-Undecane	153.35	0.0008	153.35	0.003	0.0008	0.0009	0.002
Temperature (K)	322	311	303	311	322	309	303
Pressure (bar)	4.39	56.2	1.91	56.2	19.6	4.39	1.91

Table 4.1: Data and solution for the Cavett Problem from Rosen and Pauls.

Figure 4.3(b) shows the block diagram used in both the parallel and inside-out methods when PPDS is used to calculate the bubble point only. The dashed line connects the flowsheet units to the physical property database. In the case of the parallel method the physical properties were converged simultaneously with the material balance solution as explained in section 4.2. For the inside-out method this is done in two levels where the physical properties are updated in an outer level only after the flowsheet has converged in the inner level using fixed values for physical properties, as seen in section 4.2. The physical properties are then updated for the newly converged stream flows and used in the next material balance convergence loop.

A preliminary study of the system showed that success in convergence was very much dependent on the initial approximation for the flash feed stream. The reason for this is that having fixed the flash operating pressure, a feed with flows very different from the actual values may fall in an area where no equilibrium exists. The resulting zero flows prohibited further iteration. This is particularly important if the mixture's boiling range is narrow. After performing tests with the alternative recycling structures it became clear that the best structure to use is that shown in figure 4.4. One of the main reasons is that it is easier to predict an approximate composition for the recycle streams in this case. Stream 4, which is the output of flash 2 will contain mostly the lightest components in the feed mixture (N_2, CO_2, H_2S and CH_4) and only small percentages of intermediate boiling components. The intermediate and heavier components will be almost completely recovered in stream 6. Streams 9 and 11 will contain mostly traces of the most volatile components and a small amount of the other components in the mixture. However, as a good initial approximation can be determined for the feed to the first flash (stream 4) replacing recycle stream 6 by stream 4 in the recycle configuration of figure 4.4 is still another option and, after some preliminary work on the convergence behaviour of both recycle structures, it was decided to use stream 4 as a recycle since it leads to faster convergence. The results presented

here are compared with those found by Rosen and Pauls [68], summarised in table 4.1. However, differences are expected due to the use of a different physical property database.

As the PPDS version used only allows for single precision the relative error tolerance used in the convergence loops was restricted to 1×10^{-5}.

4.5.2 Results with the Original Cavett Problem

The original problem as proposed by Cavett uses a mixture of 16 components. The results obtained using the conventional and parallel methods were identical as expected if both methods performed well. Table 4.2 lists data and results for the solution of the Cavett problem using these two methods.

As in the study of Westerberg *et al.* it was not possible to reproduce exactly the same values as Rosen and Pauls. Physical properties were estimated using a different data bank and there is also a question on their material balance results as discussed in section 4.5.1. Still the results were similar enough for the other components which leads to believe they are acceptable. In comparison to the three iteration streams in Rosen and Pauls work, there are a total of seven in this work because of the approximate nature of the physical properties calculation. Three of the iteration streams are the material balance streams 4, 9 and 11 in the flowsheet diagram of figure 4.3(b). The other four correspond to ESSPROS physical property streams. They are specially defined streams in ESSPROS for each flash unit containing the latest values for the relative volatilities. They are represented by streams 13 to 16 in the flowsheet diagram of figure 4.3(b).

As the original Cavett problem mixture is nearly ideal the VLE methods for ideal mixtures from PPDS were used. The Lee-Kesler-Plöcker method did not give good results. It gave results that differed considerably from the other methods and warned that the system was close to its critical point. Data retrieved from PPDS was considerably different from that retrieved by the other methods and

	moles/s			α_{ij} values at solution			
Component	**Feed**	**Light**	**Heavy**	**Flash 1**	**Flash 2**	**Flash 3**	**Flash 4**
N_2	45.23	45.228	0.002	18.2	69.6	138.3	175.2
CO_2	626.97	612.08	14.88	4.80	9.54	13.7	15.4
H_2S	42.85	36.34	6.51	3.20	4.80	6.27	6.85
Methane	378.22	378.03	0.19	10.4	30.7	54.4	66.3
Ethane	302.46	287.07	15.39	3.99	7.33	10.2	11.4
Propane	289.27	157.61	131.66	1.99	2.69	3.17	3.36
Isobutane	76.28	15.17	61.11	1.21	1.30	1.36	1.38
n-Butane	194.43	25.26	169.17	1.00	1.00	1.00	1.00
Isopentane	99.8	3.76	96.04	0.59	0.47	0.41	0.39
n-Pentane	142.66	3.94	138.72	0.52	0.38	0.32	0.30
n-Hexane	222.82	1.22	221.60	0.25	0.14	0.10	0.09
n-Heptane	329.13	0.42	328.71	0.14	0.058	0.035	0.030
n-Octane	232.89	0.065	232.83	0.074	0.023	0.012	0.0096
n-Nonane	210.73	0.01	210.72	0.039	0.0092	0.0041	0.0031
n-Decane	105.01	0.001	105.009	0.021	0.0038	0.0014	0.001
n-Undecane	153.35	0.0004	153.35	0.011	0.0015	0.0005	0.0003
Temperature (K)	322	311	303	311	322	309	303
Pressure (bar)	4.39	56.2	1.91	56.2	19.6	4.39	1.91

Table 4.2: Data and solution for the Cavett Problem obtained by both the conventional and parallel methods.

there was a warning flag stating the system was close to its critical point. All other VLE methods achieved a satisfactory solution, similar to that of Rosen and Pauls. Table 4.3 lists the number of iterations for each case when using the conventional and parallel methods. As in Rosen and Pauls, the error ϵ_i at the ith iteration has been taken as

$$\epsilon_i = max \mid \epsilon_{ij} \mid \tag{4.8}$$

where ϵ_{ij} is the relative error for component j at the ith iteration step relative to the previous iteration.

VLE	**Direct substitution**		**Wegstein (5th it.)**		**Wegstein (3rd it.)**	
Method	**Conv.**	**Par.**	**Conv.**	**Par.**	**Conv.**	**Parallel**
R. K. S.	40	41	20	19	27	42
P. R.	34	36	19	19	27	31
R. K. S. (API)	39	41	20	20	25	-

Table 4.3: Number of iterations for the Cavett Problem using the conventional and parallel methods.

Figures 4.9, 4.10 and 4.11 show the maximum error versus iteration number when using the conventional approach for each VLE method and figures 4.12, 4.13 and 4.14 show the corresponding results for the parallel approach.

The number of iterations increased slightly when the parallel method was used with direct substitution. The performance of both conventional and parallel methods was similar when acceleration was used every fifth iteration. The number of iterations was reduced by nearly 50% in most cases compared to direct substitution. However, when acceleration was used the parallel method more frequently had difficulty in converging, moving into an area where no phase equilibrium was found for the first flash.

The graphs in figures 4.9 to 4.14 show that with acceleration the error follows an irregular path towards convergence. When acceleration is used every fifth iteration the error increases and then is followed by a steep decrease until acceleration is used again. This behaviour results in an overall faster convergence, if more irregular. A similar effect is found when acceleration is used more frequently but then convergence rate is slightly slower and the path is even more irregular. It is worth considering acceleration at longer intervals, such as every fifth iteration, to improve the convergence rate. The nature of the flowsheet makes convergence towards equilibrium in each flash dependent on its input flow for a specified pressure and temperature. Hence sudden variations in the input may lead to unrecoverable divergence.

The methods are converged quickly, in terms of running time, and their differences are negligible. Although, contrary to what was expected, the parallel method does not produce a shorter computing time for the same number of iterations when compared to the conventional method. This is because, as was found later, the bubble point calculation in PPDS takes the same time to compute as its own flash calculation. A different physical property package with a lower ratio in computing time between the bubble point and flash calculations will produce more favourable results for the parallel method, since the number of iterations required by both methods is similar, except when Wegstein is used every third iteration.

The inside-out method failed to converge after the preset maximum number of iterations. This was surprising since it was expected to be a robust method [18]. Figure 4.15 shows the profile of maximum relative error along the iteration path. After wide variations during the first three iterations, the error oscillates between eight discrete values never achieving convergence. The wide variation at the start is due to the material balance not converging after the maximum number of iterations. The system then recovers from the poor initial estimates but enters a cycle between eight points, both for the physical properties and material balance

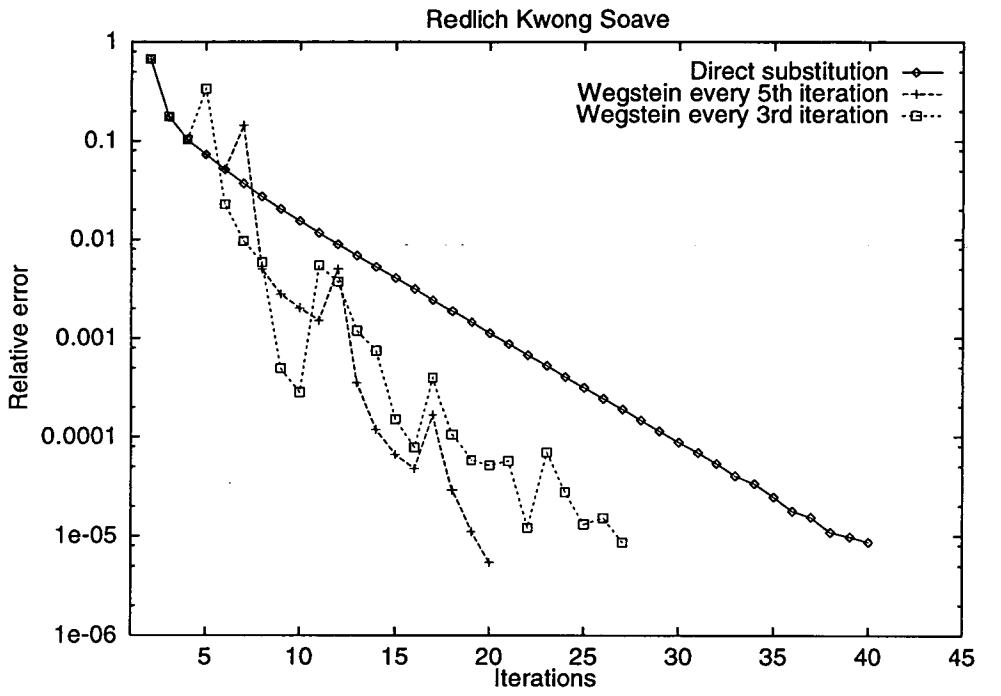

Figure 4.9: Convergence of the Cavett Problem using the conventional method and Redlich Kwong Soave.

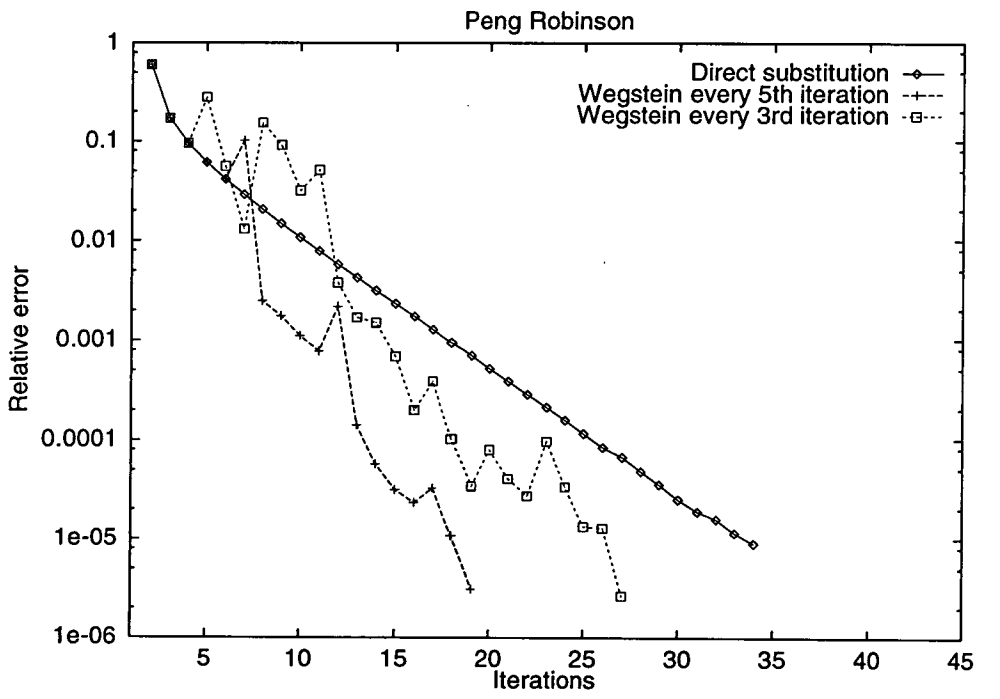

Figure 4.10: Convergence of the Cavett Problem using the conventional method and Peng Robinson.

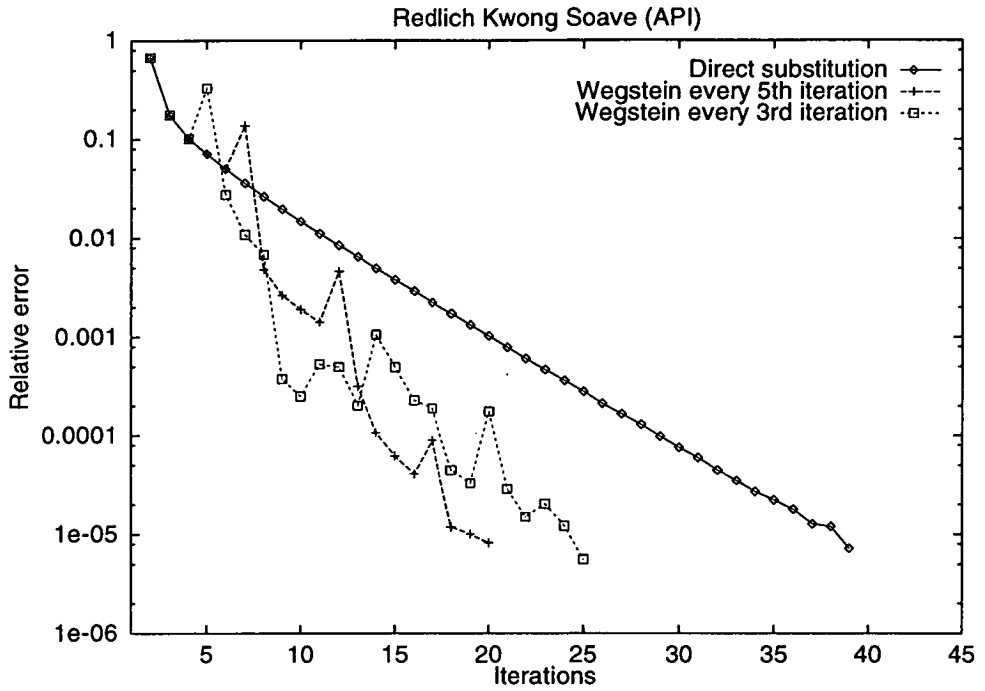

Figure 4.11: Convergence of the Cavett Problem using the conventional method and Redlich Kwong Soave (API).

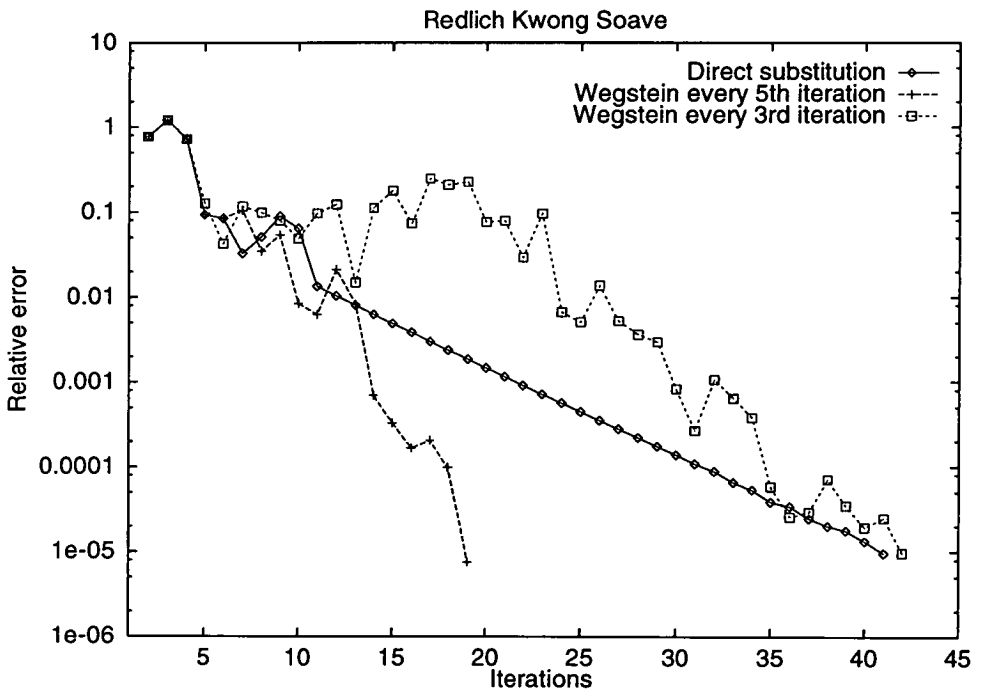

Figure 4.12: Convergence of the Cavett Problem using the parallel method and Redlich Kwong Soave.

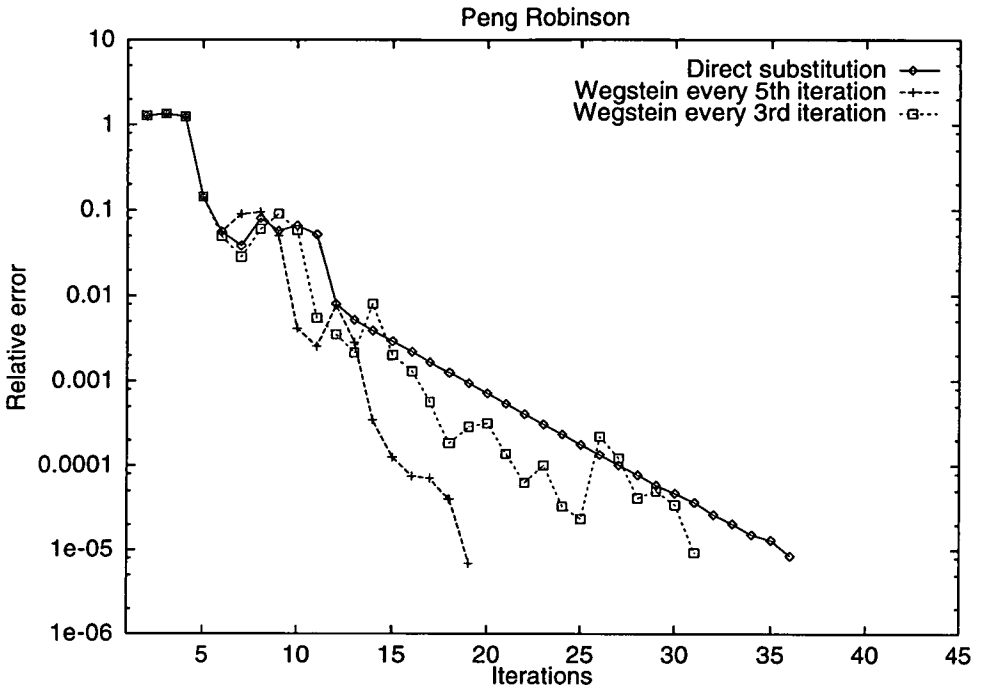

Figure 4.13: Convergence of the Cavett Problem using the parallel method and Peng Robinson.

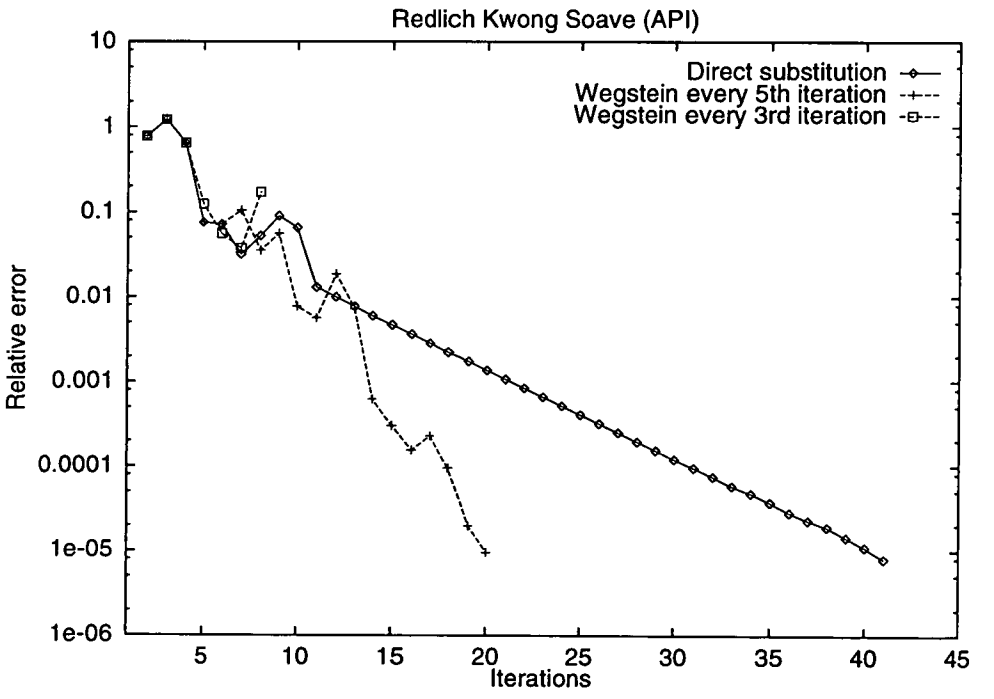

Figure 4.14: Convergence of the Cavett Problem using the parallel method and Redlich Kwong Soave (API).

loops. Applying acceleration does not have any effect on convergence although the inner loop no longer oscillates between the same group of values. Tightening the relative error tolerance in the inner loop, i.e. material balance, does not have any effect either. The reason that this may be happening could be the use of single precision to converge the data in PPDS whereas a higher precision is used for overall convergence. But the smallest error obtained is of the order 10^{-3} as shown in figure 4.15 which is still two orders of magnitude greater than the specified tolerance. The following examples, however, show a different behaviour.

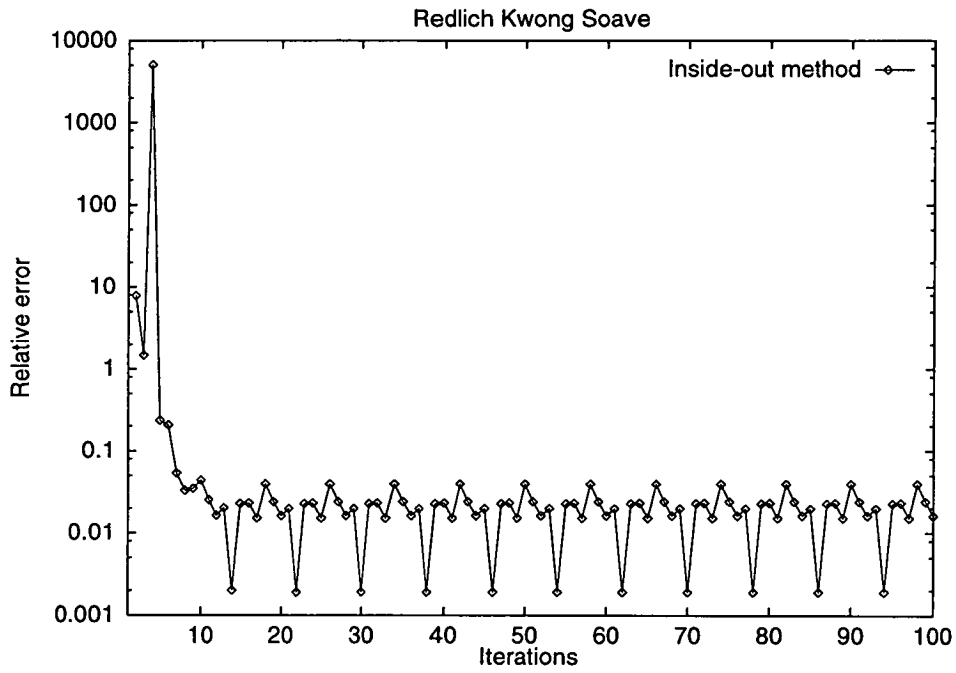

Figure 4.15: Iteration of the Cavett Problem using the inside-out method and Redlich Kwong Soave.

Using the structural evolution approach, the Cavett problem was built up for each method starting with flash 1 and adding one flash at a time as described in appendix B. The parallel method performs better using a total of 61 iterations as opposed to 67 by the conventional method. Table 4.4 shows the number of iterations taken by each flowsheet evolution. The parallel method shows faster convergence as the flowsheet 'grows' from one flash vessel to the full process.

However, once again convergence is very much dependent on the initial guesses for recycle streams and could not be achieved by the parallel method using the Peng Robinson VLE method. The structural evolution method proved to be a lengthier way of calculating the complete flowsheet in terms of overall number of iterations. Although the number of calls to PPDS is reduced during the early iterations when the flowsheet does not yet include all units, the number of iterations still required in the last step, when the whole flowsheet is being calculated, makes this method more expensive in terms of computing time, even for the fastest approach. The inside-out method failed as expected from the results obtained previously.

4.5.3 Results with a Mixture of Water, Methanol, Ethanol

The results obtained for this mixture are rather different. The Wilson VLE method is the only one that works with this mixture. A closer look through the boiling ranges computed by PPDS for the same mixture with the different VLE methods shows a remarkable variation from method to method. As expected Redlich Kwong Soave, Peng Robinson and Redlich Kwong Soave (API) show similar intervals, but these are different from Wilson's, UNIFAC and UNIQUAC. Furthermore, all methods except Wilson showed strange behaviour for this mixture. The mixture would flash in sudden peaks for small temperature intervals and the iteration variables oscillated between zero and other values, never converging.

The data used in the Cavett structure for this mixture and results obtained can be found in table 4.5. The choice of temperature and pressure for each flash was done by trial and error until phase separation was found. As a result not much separation was obtained in the light and heavy products. However a comparison on the methods behaviour can still be done.

Convergence with the Wilson method is fast both when the conventional and parallel methods are used. Using direct substitution the conventional and the

VLE Method	Number of flash vessels in structural evolution	Number of iterations					
		Conventional method			Parallel method		
		Dir. Subst.	Wegstein 5th it.	Wegstein 3rd it.	Dir. Subst.	Wegstein 5th it.	Wegstein 3rd it.
R.K.S.	1	2	2	2	5	5	5
	2	6	6	7	5	5	5
	3	24	15	15	13	10	8
	4	35	31	34	37	14	19
	Total	67	54	58	61	34	37
P.R.	1	2	2	2	-	-	-
	2	6	6	7	-	-	-
	3	20	15	13	-	-	-
	4	32	32	23	-	-	-
	Total	60	54	45	-	-	-
R.K.S. (API)	1	2	2	2	5	5	5
	2	6	6	7	5	5	5
	3	21	10	15	13	10	8
	4	37	22	33	18	14	18
	Total	66	40	57	41	34	36

Table 4.4: Number of iterations taken by the structural evolution method coupled with the conventional and parallel methods.

	moles/s			α_{ij} values at solution			
Component	**Feed**	**Light**	**Heavy**	**Flash 1**	**Flash 2**	**Flash 3**	**Flash 4**
Methanol	40.0	39.90	0.10	1.0	1.0	1.0	1.0
Ethanol	30.0	29.82	0.18	0.74	0.68	0.66	0.64
Water	30.0	29.29	0.71	0.38	0.32	0.31	0.29
Temperature (K)	400	470	375	470	400	390	375
Pressure (bar)	2.0	24	1.6	24	4.73	2.75	1.6

Table 4.5: Data and solution for the 3 component mixture Cavett Problem obtained by all methods using Wilson data.

parallel methods take 17 and 19 iterations, respectively. The lowest number of iterations was found using Wegstein every fifth iteration with only 9 iterations required for the conventional method and 13 for the parallel method. Using acceleration every third iteration required 13 iterations for conventional method. The parallel method did not converge in this case, as can be seen in figure 4.16. The error increased after iteration 9, when acceleration had just been used, and the system diverged to distant values and was no longer able to readjust and achieve convergence ending up with a solution of no phase split for the first flash in the flowsheet. A little improvement was found when acceleration was used every fifth iteration. The same behaviour observed for the previous mixture when acceleration was used is observed here. This time the shoot up in the error, caused by acceleration every third iteration, led to an unrecoverable situation. This confirms that acceleration works only if used carefully.

The inside-out method converged the physical properties loop at the second iteration making this method the fastest to converge. It had been seen before that there was little variation in the relative volatilities for this case since as long as the system stays clear of the azeotrope conditions it can be considered nearly ideal. This contributed to the fast convergence of the physical property loop, i.e. outer

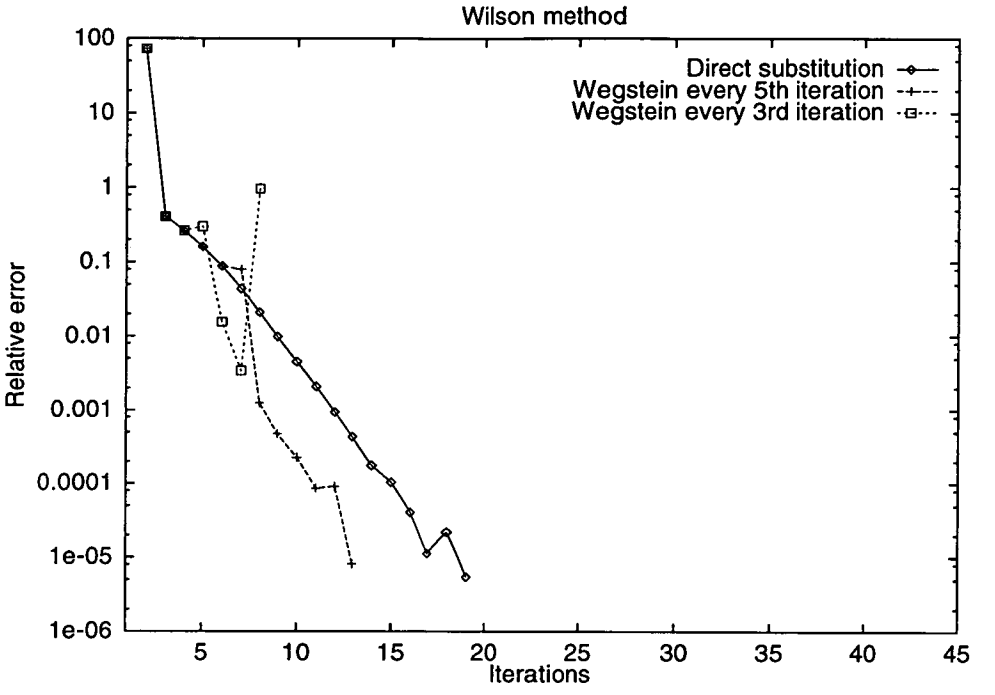

Figure 4.16: Convergence of the three component system using the parallel method.

loop. It can also be due to the lack of effective separation of the feed into a light and a heavy product for the operating conditions.

In this mixture the structural evolution method worked with the conventional method only. The total number of iterations required was 48 and 16 iterations were required at the last stage of structural evolution, similar to the total number of iterations for the previous methods, as table 4.4 shows. The difficulties and type of physical data contained in PPDS for this mixture account for these poor results, since in most cases the system diverged to areas where there is no phase split and was unable to recover.

4.5.4 Results with a Seven Component Nonideal Mixture

The data and results obtained for this mixture can be seen in table 4.6.

	moles/s			α_{ij} values at solution			
Component	**Feed**	**Light**	**Heavy**	**Flash 1**	**Flash 2**	**Flash 3**	**Flash 4**
CO	10.0	8.48	1.52	344.2	111.6	400.4	494.4
HCN	10.0	0.14	9.86	3.94	2.74	3.98	4.24
Methanol	10.0	0.02	9.98	1.0	1.0	1.0	1.0
Acetone	10.0	0.02	9.98	1.36	1.05	1.35	1.40
Acetic Acid	10.0	0.0003	10.0	0.123	0.131	0.114	0.111
Methyl Ether	10.0	1.21	8.79	19.83	11.18	20.8	23.06
Methyl Acetate	10.0	0.03	9.97	1.44	1.21	1.52	1.57
Temperature (K)	350	320	310	320	350	315	310
Pressure (bar)	10.0	30.0	6.0	30.0	20.0	7.0	6.0

Table 4.6: Data and solution for the 7 component mixture Cavett Problem obtained by all methods using Wilson data.

Table 4.7 summarises the results obtained with the different VLE methods. Redlich-Kwong-Soave is only used for reference. In fact results obtained with it assume an ideal mixture so they will not be correct and flows are actually different from the results obtained with Wilson. Given this is a nonideal mixture only the Wilson, UNIFAC and UNIQUAC VLE methods could be used effectively. However for the latter two methods PPDS had only ideal data stored for the components so the results obtained are ideal and therefore different from those obtained by the Wilson equation.

For the Wilson method the system converged quickly and again there was no difference between using the parallel and conventional methods. In this case acceleration did not have any effect. Once again direct substitution gives a smoother iteration curve whereas acceleration curves are more unstable. The inside-out method converged quickly. It took five outer loop iterations to converge the physical properties. The number of iterations required in the inner loop to converge

VLE	Direct substitution		Wegstein (5th it.)		Wegstein (3rd it.)	
Method	Conv.	Par.	Conv.	Par.	Conv.	Par.
R. K. S.	8	-	7	-	-	7
Wilson	8	8	8	8	9	9
UNIFAC	8	8	8	8	9	9
UNIQUAC	8	-	7	-	9	-

Table 4.7: Number of iterations for the Nonideal Cavett Problem using conventional and the parallel methods.

the material balance decreased very quickly after each outer loop iteration as table 4.8 shows.

Outer loop Iteration number	Number of inner loop iterations
1	8
2	6
3	3
4	2
5	2

Table 4.8: Number of iterations required by the inside-out method

The structural evolution approach worked with the conventional method only. The last stage of flowsheet evolution took the same number of iterations as the conventional method on its own. So again, there was no gain in using structural evolution.

4.6 Conclusions

In this chapter methods were presented to solve flowsheets containing isothermal nonideal phase separation steps. They are used in a dual level flowsheeting environment where the physical properties are approximated and solved in conjunction with the material balance. The intention behind using a dual level flowsheeting environment is to reduce computing time by performing some calculations locally in a simplified manner. However the results obtained were not completely successful.

Two different strategies have been presented: the parallel and inside-out methods. Their performance was compared against the traditional approach where the full equilibrium calculation is done by the rigorous physical property package. A third method using a structural evolution approach was also studied. The performance of the methods has been tested using the Cavett structure with several mixtures, with varying degrees of nonideal behaviour. It was also possible to study the behaviour of the methods using different convergence algorithms.

The parallel method using local approximations had a performance comparable to the conventional method. This did not translate to faster running times as expected when using local calculations because PPDS took the same amount of time to perform a bubble point calculation as to perform an isothermal flash calculation. It is worth, however, testing the parallel method with a different rigorous physical property package where the ratio of calculation rate between bubble point and isothermal flash is smaller. This test could not be implemented in the current work because, at the time, there was no other package available to the author. The modular form of the models developed makes them easy to plug into other software with minimum transfer work.

The inside-out method was not successful for the original 16 component mix-

ture. The error curve showed a cyclic behaviour, in which the error oscillates between a distinct set of values. An analysis of the errors for each variable show that each converged material balance loop originated a new set of distinct values for the relative volatilities in a sequence of eight different solutions that repeated themselves without achieving the required accuracy between each converged solution. However the method worked well and proved to be very fast for the other two mixtures studied. Results show that this method is fast and converges efficiently to the final solution when used for nonideal mixtures. However it is not absolutely reliable since it does not always guarantee convergence will be achieved.

This method differs from that of Boston and Britt [18] in the way the reference component equilibrium constant is calculated. As seen in chapter 2 they assume a simplified function of temperature which includes two parameters that are largely independent of temperature. Later Boston [19] included a third parameter to account for pressure dependency in nonideal mixtures. In this work an ideal approximation for the pressure correction is used of the form of equation 4.7. For an isothermal flash, no temperature correction is performed. It is expected that such an approximation gives a good estimate of the value for the reference component equilibrium constant. It is also possible that this lack of convergence has to do with the precision required in ESSPROS which is greater than that used by PPDS.

The use of Wegstein acceleration is justified on an infrequent basis. It causes irregularity in convergence but reduces the number of iterations considerably when used every fifth iteration. It should be used with caution because frequent acceleration may cause the system to diverge.

There was no noticed gain in using the structural evolution method. It converged quickly in the first steps when simpler flowsheets were being considered. This, however, did not produce better estimates for the recycle streams associated with added units and so did not decrease the number of iterations required to converge the final flowsheet. In fact the number of iterations was basically the

same in the last stage of structural evolution, when the full flowsheet was calculated, as when no structural evolution was used. Some mixtures even experienced problems in converging for the new estimates. This is related in particular to the kind of components in the mixture, as in the case of the ternary mixture of water, methanol and ethanol. The models cannot cope with great variations in the feed when the temperature and pressure are fixed. In these cases, particularly for narrow boiling mixtures, the estimated flash feed composition may fall in a region where no vapour liquid equilibrium exists, making it impossible for the algorithm to recover due to lack of new values for the physical properties in the new iteration step.

In summary, for the cases studied, the best results were obtained by the conventional and parallel methods accelerated every fifth iteration. Unfortunately no gain was found in terms of computing time for the parallel method, due to the inefficiency of the bubble point calculation in PPDS. It would be worth doing the same study with a different rigorous physical property package to evaluate this.

The results obtained in this chapter and in chapter 3 show how difficult it is to obtain a reliable method using approximate physical properties to solve the separation of nonideal mixtures. Given the high interdependency of components in nonideal mixtures, it is extremely important to have accurate values for the physical properties, which implies the need for a robust and reliable way of calculating them. As was stressed before in this work, time is an important factor and is strongly related to the frequency with which the properties are calculated in flowsheet simulation and synthesis.

The results so far in this work show how critical the use of accurate physical properties is to successfully simulate nonideal separation systems. Nevertheless their calculation is an important slice of the simulation time required. The other potential time consuming factor is the use of detailed models to accurately and completely simulate and design a separation unit. The remainder of this work will

discuss the development of a shortcut procedure for nonideal mixture separation that is thermodynamically rigorous.

Chapter 5

A Thermodynamically Rigorous Shortcut Procedure for Nonideal Distillation

Work to date as described in chapter 2 shows the complexity and lengthiness of rigorous simulation and synthesis for the separation of nonideal mixtures. The complexity of physical properties of nonideal mixtures and their influence on the separation process do not lend themselves easily to the development of shortcut methods for use in design. On the other hand the computing demand justifies research into the development of shortcut methods for the first stage of design. The areas of greatest time consumption are:

- Physical property calculation.
- Full rigorous simulation of the separation process.

Thus far this work has looked into ways of reducing the amount of computing time by approximating component physical properties. This has proved to be a difficult task and the results highlighted how important it is to use accurate physical properties in order to obtain reliable and fast convergence in simulation.

It becomes more crucial in the synthesis of nonideal distillation processes. Various designs must be evaluated under different operation conditions, making the effective use of approximate physical properties even more difficult.

The other potential time reducing factor is the use of shortcut correlations to avoid a time consuming rigorous simulation. There are well known shortcut methods both in the form of correlations and in graphical form [71] mainly used for ideal and near ideal mixtures. In particular correlations such as Underwood's equation for the minimum reflux [72] and the Fenske equation for the minimum number of stages [7] are usually employed assuming physical properties will remain constant along the column. This assumption invalidates their use for nonideal systems.

The use of shortcut correlations also implies that a rigorous detailed simulation will be required at a latter stage to obtain the complete design and specifications. Hence a shortcut procedure should be viewed as a fast tool to eliminate the bulk of unwanted solutions and provide the user with the best candidates to be worked on in detail. Some authors, e.g. Smith and Pantelides [62], consider it convenient to have a tool capable of making all the decisions using complex rigorous models to design a process in detail. Such a tool would retrieve a single optimal flowsheet. Their reasoning is that approximate methods, if not accurately defined, may lead to structures that may not always be feasible to operate, or may overlook other feasible structures. However it also means that the user will rely completely on the final solution presented and will have little input on how it is achieved. Other authors such as Wahnschafft *et al.* [36] [59] and Malone and Doherty [58] agree that it is useful to have a first stage of synthesis using heuristics and shortcut methods to decide on the structure, at the same time allowing the user some control. Such a procedure screens off the bulk of unwanted alternatives in a small amount of time, in comparison to the full rigorous simulation. As a result the synthesis procedure retrieves a set of best solutions found, which the user can then refine.

Recent developments in the understanding of nonideal separation behaviour have enabled more research into the use of heuristics and shortcut calculations. The resulting small set of alternative designs can then be refined by the user, taking into account knowledge and facts specific to the particular problem. At this stage a fully rigorous simulation tool can be used to decide on the final design. Although previous authors have made frequent use of heuristics, it is important to keep them to a minimum to maintain the required degree of rigour and accuracy for the preliminary design, while employing techniques that will shorten the computing time required.

The present work puts the previous considerations into practice by using a thermodynamically rigorous shortcut procedure. Figure 5.1 shows the schematic of the proposed procedure. The design variables generated are the number of stages, reflux ratio, heat requirements and costs. The reflux ratio calculation is based on the minimum reflux ratio calculated by the Underwood equation using rigorous physical properties at the feed. Section 5.4 describes the minimum reflux calculation in more detail. The actual reflux ratio for the column is then calculated with a reflux factor provided by the user. The minimum number of stages for the column is obtained via an infinite reflux calculation, which is an iterative procedure and will be described in section 5.1. The actual number of stages is calculated via the Gilliland correlation [8]. The cost correlation used is from Rathore *et al.* [73] and is described in chapter 6.

5.1 Infinite Reflux Calculation

A column operating at infinite reflux can be shown graphically by the distillation lines described in chapter 2, section 2.6. Although this is not a practical separation condition, it has interesting qualities that are useful for shortcut calculations. Apart from giving an operation profile it includes a material balance around the

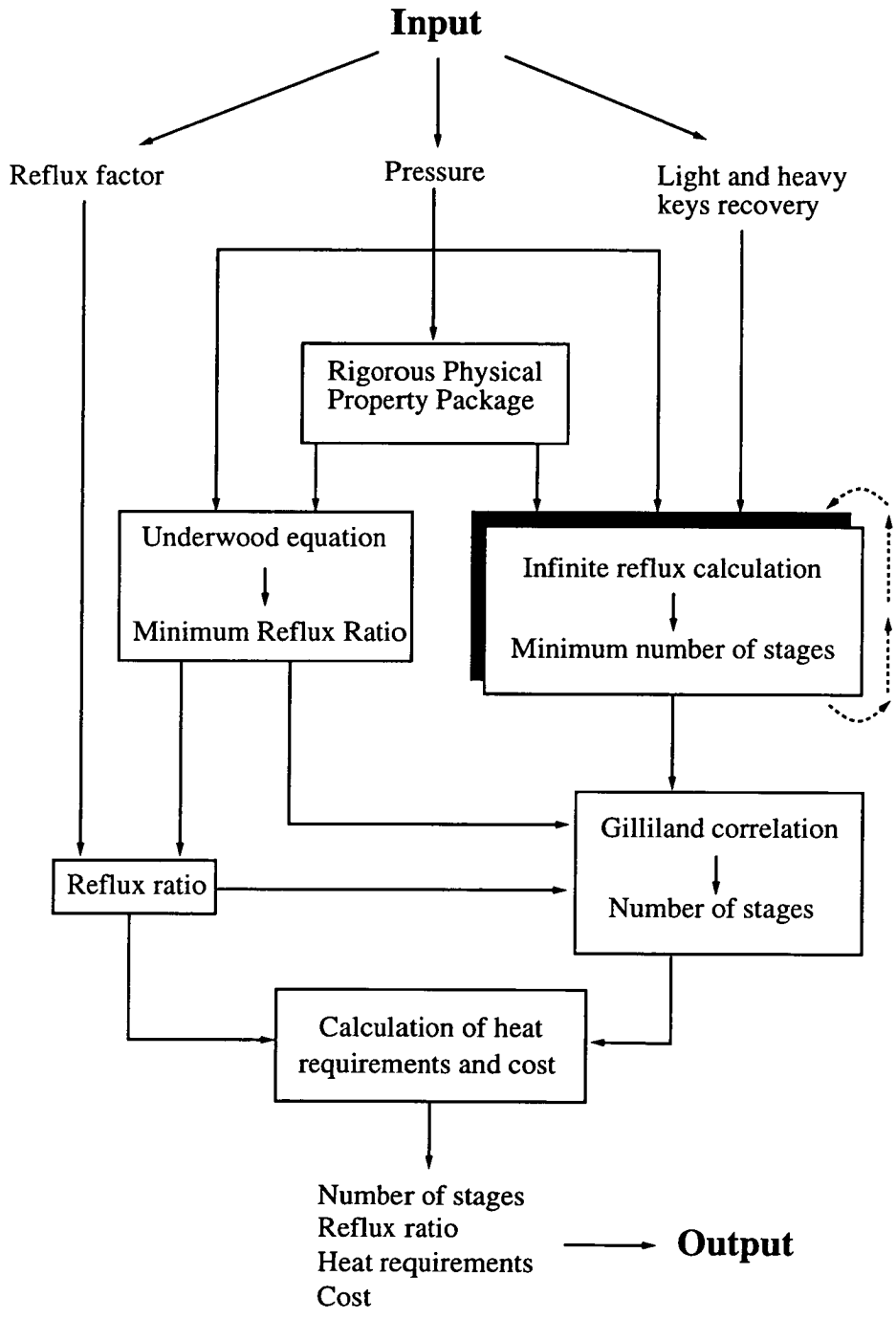

Figure 5.1: Structure of rigorous shortcut procedure.

column corresponding to a feasible operation point. Furthermore, given the comparatively small dimension of the flows in and out of the column in relation to the infinite reflux, the number of feeds and their location are irrelevant for the calculations.

The operation inside the column is equivalent to that of total reflux, involving the same stage-to-stage and equilibrium equations, viz

$$y_{i,j} = x_{i,j+1} \tag{5.1}$$

$$y_{i,j} = k_{i,j}x_{i,j} = \frac{\alpha_{ir,j}x_{i,j}}{\sum_{k=1}^{n_c} \alpha_{kr,j}x_{k,j}} \tag{5.2}$$

where i is the component number from 1 to n_c and j is the tray number from 1 to m counting from the bottom. The variables x and y are the liquid and vapour mole fractions, respectively, $k_{i,j}$ the equilibrium constant as defined by equation 2.8 and $\alpha_{ir,j}$ the relative volatility with respect to a reference component r, as defined by equation 4.3.

In addition there are n_c material balances around the column, viz

$$f_i = d_i + b_i \tag{5.3}$$

where f_i, d_i and b_i are the partial flows of component i in the feed, distillate and bottoms, respectively.

The compositions at the top stage, $y_{i,m}$, and bottom stage, $x_{i,1}$, and the corresponding component flows, d_i and b_i are related by

$$y_{i,m} = \frac{d_i}{\sum_{i=1}^{n_c} d_i} = y_{i,d} \tag{5.4}$$

$$x_{i,1} = \frac{b_i}{\sum_{i=1}^{n_c} b_i} = x_{i,b} \tag{5.5}$$

Substituting $y_{i,j}$ given by equation 5.1 in equation 5.2 for two key components, light key, l, and heavy key, h, the following relation is obtained:

$$\frac{x_{l,j+1}}{x_{h,j+1}} = \frac{\alpha_{l,j}}{\alpha_{h,j}} \frac{x_{l,j}}{x_{h,j}} \tag{5.6}$$

Hence,

$$\frac{y_{l,d}}{y_{h,d}} = \frac{x_{l,b}}{x_{h,b}} \prod_{j=i}^{m} \frac{\alpha_{l,j}}{\alpha_{h,j}} \tag{5.7}$$

If the component relative volatilities are constant across the column, equation 5.7 reduces to the Fenske equation:

$$\frac{y_{l,d}}{y_{h,d}} = \frac{x_{l,b}}{x_{h,b}} \left(\frac{\alpha_{l,j}}{\alpha_{h,j}} \right)^m \tag{5.8}$$

From equations 5.4 and 5.5 it follows that

$$\frac{y_{i,d}}{y_{j,d}} = \frac{d_i}{d_j} \tag{5.9}$$

$$\frac{x_{i,b}}{x_{j,b}} = \frac{b_i}{b_j} \tag{5.10}$$

So for any component $i \neq h$

$$\frac{d_i}{d_h} = \frac{b_i}{b_h} \prod_{j=1}^{m} \frac{\alpha_{i,j}}{\alpha_{h,j}} \tag{5.11}$$

which can be re-written as

$$\frac{d_i}{b_i} = \frac{d_h}{b_h} \prod_{j=1}^{m} \frac{\alpha_{i,j}}{\alpha_{h,j}} \tag{5.12}$$

From the equations above there are

- n_c component material balances in equation 5.3.
- $(n_c - 1)$ equilibrium equations in equation 5.11.

If the component flows in the feed are known there are

- $(2 \times n_c)$ unknowns, d_i and b_i.
- 1 unknown number of stages m.

Hence there are a total of $(2n_c - 1)$ equations and $(2nc + 1)$ unknowns. If two other variables are specified the remaining unknowns can be determined. Typical specifications are

- *In design:* two product flows, concentrations or recoveries.

- *In simulation:* one product flow, concentration or recovery and number of stages.

The primary aim of this study is to produce a model that will be used in design and synthesis of processes. Hence a procedure must be developed for use in the design of distillation columns. The development of such a procedure will be discussed in the next section.

5.2 Algorithm

The rationale described in section 5.1 is used to implement an algorithm to calculate the minimum number of stages for a nonideal distillation column. As seen in section 5.1 two degrees of freedom remain, hence two variables must be specified. The variable to calculate is the minimum number of stages, m, which appears in equation 5.12. In order to calculate m it is necessary to know the component flow rates and relative volatilities for each stage. The relative volatilities vary from stage to stage. Their rigorous calculation depends on the mixture's composition for each stage, and hence on the component flows. But the composition is not known for any stage, including either extreme of the column. Hence an initial estimate is required for the calculations. Iteration proceeds from there until the physical properties and the material balance across the column are solved, thus obtaining the solution for m.

In order to facilitate the calculation of the component flows across the column, the two specified variables were chosen to be the recoveries of two components, light key, l, and heavy key, h. The recovery for component i, r_i is defined as

$$r_i = \frac{d_i}{f_i} \tag{5.13}$$

From the flows relationship given by equation 5.3, equation 5.13 can be rewritten as a function of the product flows, viz

$$\frac{d_i}{b_i} = \frac{r_i}{1 - r_i} \tag{5.14}$$

Also the material balance equation 5.3 can be rearranged by dividing b_i on both sides, viz

$$b_i = \frac{f_i}{1 + \frac{d_i}{b_i}} \tag{5.15}$$

It is more convenient to write the equation in this form since it gives the ratio d_i/b_i, which also appears in the nonideal Fenske equation 5.12.

The solution for m is obtained at the point where the extreme points of the infinite reflux profile coincide with the material balance across the column. Hence the iterative calculation can start at one extreme of the material balance profile, i.e. tops or bottoms composition. The stage by stage infinite reflux calculation will proceed from there until the specified recovery is achieved. At this point, if the system has converged, the composition of the infinite reflux profile for this stage should coincide with the corresponding material balance composition.

5.2.1 Initial Estimate

Given that both the components flows and their relative volatility are unknown across the column and must be iterated upon, an initial estimate is required to start up the procedure.

An initial estimate for the tops and bottoms components flows can be obtained assuming ideal physical properties. This assumption provides an analytical solution by using Fenske equation 5.8 which can be re-written in terms of flows as follows:

$$\frac{d_l}{b_l} = \frac{d_h}{b_h}\left(\frac{\alpha_{l,j}}{\alpha_{h,j}}\right)^m \tag{5.16}$$

Since, in this case, the physical properties are constant, it can be further assumed they are equal to those of the feed. Hence they can easily be calculated using a rigorous physical property package.

The ratios d_h/b_h and d_l/b_l can be easily calculated using equation 5.14 for the specified light and heavy key component recoveries. These two ratios plus the physical properties calculated for the feed provide a first estimate for the minimum number of stages assuming an ideal mixture. Equation 5.16 can then be used again to calculate all d_i/b_i for other components in the mixture, using the calculated m and one of the key component ratios. Once all ratios are calculated the actual flows b_i and d_i can finally be obtained with equation 5.15.

The calculation above provides the necessary initial estimates for the algorithm explained below. These are the bottoms and tops component flows to start the stage by stage calculation and check whether the lines intersect at the other end.

5.2.2 Calculation of the Minimum Number of Stages

The stage by stage calculation can start at either end of the column. This will be determined by which component is being separated from the mixture, since the required recovery may not be achieved for the other key component at the other end of the column.

If the tops are chosen, then an estimate must be provided as described above. The stage by stage calculation will then proceed as a series of dew point calculations until the required recovery for the key component is achieved. The flows are calculated for each stage and compared to the estimate obtained for the bottoms by the material balance. They must coincide for convergence to be achieved. Alternatively the calculation can start at the bottoms but follow the same rationale.

For illustration it will be assumed that the calculation will start at the bottom of the column and the initial flow estimate has been calculated as detailed in section 5.2.1. In this case the bubble point conditions are calculated for the bottom flow via a rigorous physical property package. The bubble point vapour composition is used to calculate the top product flows for this stage. This calculation is done in the following way. The amount of light key required in the tops is known and calculated from equation 5.13. The flow of heavy key has been fixed and its amount in the bottoms has been estimated as b_h. Thus d_h can also be estimated.

By definition in equation 5.4

$$\frac{d_h}{y_h} = \frac{d_l}{y_l} = \frac{d_i}{y_i} \tag{5.17}$$

Hence all component flows can be calculated from the stage vapour composition and fixed d_h. A value for d_l is obtained for the current stage, which will be compared to the specified value obtained from equation 5.13. It is now possible to decide whether the required recovery for the light key component has been achieved for the current stage or if one more stage should be added. As the calculation is done assuming equilibrium has been reached at each stage under infinite reflux conditions, the liquid flow in the stage above is known and equal to the vapour flow coming from the previous stage. Repeated stage to stage calculations continue until the required light key recovery is achieved. At this point the other component flows are checked for convergence against the estimated

material balance flows. This step corresponds to checking if the extreme points estimated for the material balance and those of the infinite reflux curve intersect. If this is the case calculation is complete. However it will only happen after the physical properties have converged because only then will the correct flow estimates be obtained.

If convergence has not been achieved yet, the values for the flows b_i and d_i will now be estimated using equation 5.12 with the values obtained for the physical properties in each stage during the previous iteration and the new number of stages, m.

Since rigorous physical properties are used at all times the method should converge easily, as was verified in chapter 4 when rigorous physical properties were used. The performance of this shortcut procedure will be evaluated in chapter 6.

The main steps of the algorithm are summarised below:

1. $j = 1$ (start at bottom of column)

2. Perform a bubble point calculation using a rigorous physical property package to obtain $y_{i,j}$.

3. Store the component relative volatilities, $\alpha_{ir,j}$ and the stage vapour and liquid compositions.

4. Calculate top product flows $d_{i,j}$ which would be achieved for this stage using equation 5.17.

5. Check if calculated light key flow ($d_{l,j}$) is greater or equal to the specified d_l as calculated by equation 5.13.

6. If previous condition is true this is the current estimate of column size, i.e. $m = j$. Move to step 8.

7. If the condition is false add one more tray to the column, i.e. $j = j + 1$, and go back to step 2.

8. All flows from the column $d_i, i \neq l, h$ are now known. Check these against the material balance equation 5.3 with the estimated b_i. If it meets the balance then finish.

9. If not, re-estimate b_i by obtaining an improved ratio d_i/b_i for $i \neq l, h$ from equation 5.12 with values obtained for m and $\alpha_{i,j}/\alpha_{h,j}$ in the previous iteration.

10. Calculate new b_i from equation 5.15.

11. Go back to step 2.

5.3 Azeotrope Detection

The degree to which a mixture is nonideal can be measured by the deviation of the activity coefficient from unity for each component. This deviation in turn influences the component equilibrium constants. Wahnschafft [36] describes a simple procedure to determine binary azeotropes. The procedure uses equilibrium constants for the two components at infinite dilution in each other. Its success depends on using a reliable method such as UNIFAC [11] for physical property calculation.

The calculation of equilibrium constants at infinite reflux is illustrated with aid of figure 5.2. The figure shows the bubble and dew point curves for a mixture containing acetone and chloroform. It shows a maximum boiling azeotrope at atmospheric pressure. The equilibrium constant of acetone at infinite dilution in chloroform is lower than one. But the equilibrium constant of chloroform at infinite dilution in acetone is also lower than one. Following the same idea, in

a mixture with a minimum boiling azeotrope both values would be greater than one. According to Wahnschafft [36] this criterion is reliable since it should only fail for binary mixtures with multiple azeotropes, an extremely rare phenomenon. He includes a third rule in that a heteroazeotrope exists when the equilibrium constants at infinite dilution are greater than 10. However this is a heuristic rule derived from numerous case studies.

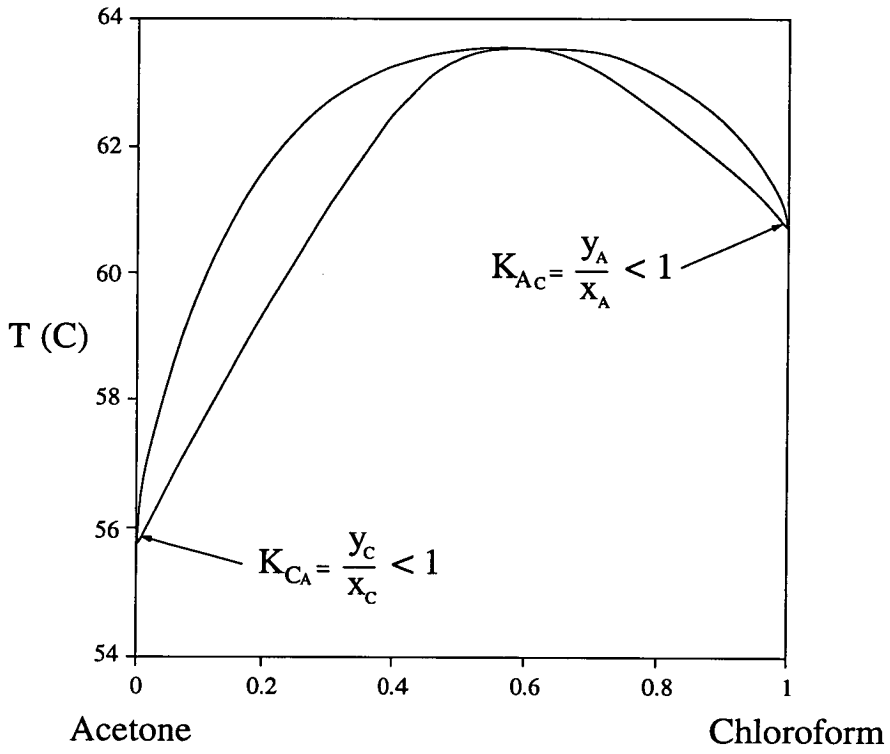

Figure 5.2: Bubble and dew point curves of a mixture of acetone and chloroform showing a maximum boiling azeotrope at 100 kPa.

More recently Fidkowski *et al.* [74] have introduced a mathematical, rather than physically based, method for identifying azeotropes of any order. The prediction of azeotropes is defined as a multi-dimensional root finding problem. They propose a homotopy method to solve the roots of

$$y_i - x_i = 0 \qquad i = 1, ..., n_c - 1 \tag{5.18}$$

where x_i and y_i are the liquid and vapour compositions in equilibrium, respectively, for component i. Equation 5.18 has as roots all pure components and azeotropes.

The homotopy method introduces a deformation by a homotopy parameter h_p, thus defining an artificial equilibrium function

$$\tilde{y}_i = \left[(1 - h_p) + h_p \frac{\gamma_i}{\phi_i}\right] \frac{P_{vp,i}}{P} x_i \tag{5.19}$$

where γ_i and ϕ_i are the activity and fugacity coefficients, respectively, for component i. $P_{vp,i}$ is the pure component i vapour pressure and P the system's pressure.

For $h_p = 0$ equation 5.19 reduces to Raoult's law and for $h_p = 1$ the nonideal relation shown in equation 2.8 is obtained. The physical properties can be calculated using a suitable VLE method, such as UNIFAC or Wilson [11]. They then use a homotopy continuation method and solve

$$\tilde{y}_i - x_i = 0 \qquad i = 1, ..., n_c - 1 \tag{5.20}$$

in terms of bifurcation theory. Details on the mathematical particulars can be found in the paper by Fidkowski *et al.* [74] and references quoted therein.

The graphical representation of this method is straightforward. However, experimental data is still required to fully justify the claims that the method can fully determine all azeotropes in a given mixture for more complicated cases.

In a different approach Schembecker and Simmrock [75] describe a stand-alone system called AZEOPERT intended to be used in synthesis. The system has five different levels of operation with different degrees of accuracy. It includes a database of about 20,000 azeotropes and heuristic rules formulated on the basis of case studies from components in the database and results from literature. Although

it is not specified if higher order azeotropes can be determined, all the rules and procedures are made for binary azeotropes. This system is reliable in that it tries to include sufficient experimental data to provide accurate azeotrope prediction, but the use of heuristic rules limits its use and reliability for mixtures of unknown behaviour, given the unpredictability of nonideal mixtures. Furthermore, no mention is made of effects of pressure on azeotrope behaviour.

In the current work only mixtures with binary azeotropes are considered. Hence the procedure used by Wahnschafft [36] is sufficient and has been chosen as an efficient way of identifying azeotropes.

5.4 Calculation of Minimum Reflux Ratio

A method for calculating the minimum reflux ratio has been developed by Doherty and coworkers [30] [51] [52] [53]. Their approach is restricted in that it is only valid for splits where either the lightest or heaviest components are separated as a high purity stream. It also includes a trial and error procedure and the complete rectifying and stripping profiles are designed during this procedure. They include, however, some interesting ideas. Levy *et al.* [30] developed an approximate method for nonideal and azeotropic distillation that becomes exact for ideal mixtures, reducing to the Underwood method. It assumes constant molar liquid flow rates in both sections of the column, constant molar flow rate of vapour, saturated liquid feed and theoretical stages. The basis of this procedure is a design method developed by Dongen and Doherty [35] in which the column is approximated by the set of differential equations that have been discussed in chapter 2. This method is applied in a trial and error procedure where the iterative variable is minimum reflux. The condition for minimum reflux is given by the reflux ratio for which one of the profiles (rectifying or stripping) just ends as it touches the other profile (stripping or rectifying). The argument for their method is as

follows: if the product compositions, as well as the feed, are specified the profiles can be calculated starting at the column extremes and moving in the direction of the feed stage. Geometrically they show that the condition of minimum reflux in ideal mixtures is that the tangent to the saddle pinch profile at the feed pinch point is a straight line through the feed composition. This is the foundation for the algebraic method. For ideal mixtures it constitutes a search for the value of reflux ratio which makes the feed pinch point, saddle pinch point and the feed composition point collinear.

Although the method is correct for ideal mixtures, it can only be used as an approximation for nonideal mixtures since the saddle pinch point profile is no longer linear. They claim the approximation is still good and add a few additional rules for the case of azeotropic mixtures which contain distillation boundaries. These rules are related to boundary crossing which is only allowed if it is done from the concave side of the boundary.

The method was later extended by Levy and Doherty [51] to be used in columns with two feed streams. In this case there are pinch points in each section of the column, giving a total of three. They determine which is the controlling feed composition to eliminate one point and apply the method as before, using the ideal approximation again. All assumptions made in the previous work by Levy *et al.* [30] remain.

In a continuation of this work the assumption of constant molar overflows and saturated liquid feed were removed by Knight and Doherty [52] who considered non-negligible heat effects. Energy balance equations are thus added to the previous method by Levy *et al.* [30]. The calculation is done in the same way, by iterating on the reflux ratio value and the ideal approximation of collinear points is still used for nonideal mixtures. In the examples shown the errors reported were of the order of 5%.

Julka and Doherty [53] followed up on the previous work from Doherty and

coworkers [30] [52]. They reintroduced the restriction of constant molar overflows but extended the method for quaternary mixtures and presented a proof of its validity to multicomponent mixtures of any number of components. They called their method the *zero volume method.* Instead of three composition points, i.e. feed and saddle pinch points and feed composition, three composition vectors are obtained comprising the feed point and pinch point concentrations. For an ideal mixture these vectors must be coplanar. For nonideal mixtures they make the same approximation, as previously done by Levy *et al.* [30] for the three component case. The method is exact for constant relative volatilities and reduces to the Underwood method as a limiting case.

While the methods discussed above merit consideration for the geometric insight on the calculation of the minimum reflux ratio for nonideal mixtures, they still contain several assumptions and are limited to two different algorithms valid only for certain types of splits. This, allied to the fact that they are trial and error methods requiring the calculation of the column profile at each step, justifies continuing the search for other more suitable methods for the calculation of the minimum reflux ratio in the distillation of nonideal mixtures.

Recently Blaß and coworkers [76] [77] have developed shortcut models for the minimum reflux ratio calculation in nonideal distillation. Their methods are intended to be used in the first stages of synthesis, hence the choice of a fast shortcut procedure. The first publication by Koehler *et al.* [76] describes an empirical method that does not require the assumptions on ideal boiling or enthalpy behaviour and is valid for multicomponent mixtures, irrespective of the type of split, as long as no mixing gaps occur. The method does not use rigorous simulation or column iteration procedures. A reversible distillation model is used, which is reversible in the limit where no entropy production occurs. This brings in certain conditions such as

- All the heat to and from the column must be transferred at zero temperature difference.

- No pressure drop is allowed along the column if no means for reversible pressure adjustment exist.

- No contact of non-equilibrium liquid and vapour is permitted anywhere in the column.

The method developed can only be used in columns with a single feed and two outputs and assumes that the products are given and can be obtained by distillation. The key components must be neighbouring to each other.

Instead of the collinearity criterion they propose a general angle minimisation criterion to identify the physically meaningful pinch point pair. Minimisation then proceeds using the light key component as the search variable in the stripping section as opposed to the minimum reflux as used by Doherty and coworkers. Blaß and coworkers choose a variable which is known to monotonically decrease/increase between a column extreme and the respective adiabatic pinch point. This method has been tested with a number of mixtures, a few cases of numerical problems were encountered and the authors emphasise that further work is required in the numerical details.

Poellmann *et al.* [77] substitute the empirical angle criterion by a physically based one. Near the pinch point composition the stages are very close together and the variation in composition between each stage is small. It is thus possible to approximate the nonlinear stage-to-stage model by a linear first order differential equation. The method is only briefly described in the literature and is based on work published elsewhere. In the present work it was not possible to collect more detailed information about this recently developed method and test its applicability.

From the considerations above it was decided to use the Underwood method [9] at this first stage of evaluation, using rigorous physical properties at the feed. The principle used by the Underwood method is that the conditions for the liquid stream leaving the feed stage as derived from the rectifying section and from the stripping section must be simultaneously satisfied at minimum reflux. Hence the following empirical correlation is obtained:

$$R_{min} + 1 = \sum_{i=1}^{n_c} \frac{\alpha_{i,r} x_{i,d}}{\alpha_{i,r} - \psi} \tag{5.21}$$

where R_{min} is the minimum reflux ratio, $\alpha_{i,r}$ the relative volatility of component i and $x_{i,d}$ the liquid molar fraction of component i in the distillate. The parameter ψ is related to the degree of vaporisation of the feed, q, by

$$\sum_{i=1}^{n_c} \frac{\alpha_{i,r} x_{i,f}}{\alpha_{i,r} - \psi} = 1 - q \tag{5.22}$$

The parameter ψ should have a value between the values of the relative volatilities of the light and heavy keys. The bisection method is used to solve these equations.

The Underwood method has been widely used for ideal mixtures because it assumes constant relative volatilities and molar overflow. The assumption of constant relative volatilities hinders its use for nonideal mixtures, but it will still provide an approximation if rigorous physical properties are used. In the present work the exact values for relative volatilities at the feed composition are used. Hence, the accuracy of the method is restricted by the assumption that the pinch occurs at the feed. This is not an unreasonable assumption for a shortcut procedure in the first stage of synthesis, providing a quick answer for R_{min}. The method will return a reasonable approximation for the minimum reflux ratio, to which will be applied a user defined factor to obtain the operating reflux ratio. The factor will be a heuristic factor based on experience. This strategy should be revised in

the future as more knowledge on the behaviour of nonideal mixtures is available and new methods are under development.

5.5 Calculation of the Number of Stages

The calculation of the number of stages can be done by means of two different equations. Gilliland equation [8] is used primarily to determine the effective number of stages, m, once the minimum number of stages, m_{min}, minimum reflux ratio, R_{min} and effective reflux ratio, R, are known. For

$$\frac{R - R_{min}}{R+1} < 0.125 \tag{5.23}$$

The Gilliland equation is given by

$$\frac{m - m_{min}}{m+1} = 0.5039 - 0.5968\left(\frac{R - R_{min}}{R+1}\right) - 0.0908\log\left(\frac{R - R_{min}}{R+1}\right) \tag{5.24}$$

and for

$$\frac{R - R_{min}}{R+1} \geq 0.125 \tag{5.25}$$

it is given by

$$\begin{aligned}\frac{m - m_{min}}{m+1} &= 0.6257 - 0.9868\left(\frac{R - R_{min}}{R+1}\right) + 0.5160\left(\frac{R - R_{min}}{R+1}\right)^2 \\ &\quad -0.1738\left(\frac{R - R_{min}}{R+1}\right)^3\end{aligned} \tag{5.26}$$

An alternative equation has also been made available and that is Eduljee's equation [78], which is based on the replacement of the Gilliland graphical method by

$$m = \frac{m_{min} - 0.75\left[1 - \left(\frac{R - R_{min}}{R+1}\right)^{0.5668}\right]}{1 - 0.75\left[1 - \left(\frac{R - R_{min}}{R+1}\right)^{0.5668}\right]} \tag{5.27}$$

Equation 5.27 is valid only when

$$\frac{R - R_{min}}{R+1} \geq 0.01 \tag{5.28}$$

It was found during the analysis of the case studies that the number of stages is usually slightly underestimated by these methods. Furthermore Eduljee's equation tends to calculate a lower number of stages than Gilliland equation. Hence Gilliland equation was chosen as a default in the shortcut procedure. This is not an unreasonable choice, particularly since the Gilliland equation is most commonly used in practice. It should be noted however that no one has yet quantified the accuracy of this correlation.

5.6 Summary

A thermodynamically rigorous shortcut procedure for nonideal distillation has been presented. The procedure can be used as a stand alone model or as part of a synthesis package in the preliminary design of nonideal distillation sequences.

The minimum number of stages is calculated at infinite reflux using an iterative procedure and rigorous physical properties for each stage. The actual number of stages is calculated by the Gilliland equation. The minimum reflux ratio is calculated using the Underwood method assuming rigorous physical properties at the feed. The detection of azeotropes is kept as simple as possible at this stage. Only binary azeotropes are considered, which are the most common case in practice.

The design variables calculated by this procedure will be used in the next chapter as a model for a synthesis package. Case studies will be presented that evaluate the performance of such a procedure for use in the synthesis of azeotropic distillation sequences.

Chapter 6

Application to the Synthesis of Azeotropic Distillation

In this chapter the shortcut method described in chapter 5 is applied to case studies. The model has also been implemented as a stand-alone tool for rapid simulation and design of nonideal distillation columns. However, its more important application is as a model within a synthesis package for synthesis of nonideal distillation structures. As discussed in chapter 5 the main aim is to provide accurate design variables for the first stages of synthesis, where it is required to calculate a small set of good candidate alternatives for further rigorous analysis at later design stages.

The next sections will give a general view of the synthesis package chosen, its features and the implementation of the azeotropic distillation model in it. Examples of its application follow.

6.1 Introduction to CHiPS

As seen in chapter 2 a few synthesis tools have been recently implemented that can deal with distillation of nonideal mixtures. Each has different aims and different philosophies. The most adequate to our goals is CHiPS. The general features of CHiPS are described by Fraga and McKinnon [61] and more detail on how to use the software is included in Fraga [79].

The optimisation algorithm in CHiPS uses a branch and bound search between all unit types allowed by the user. One of the features of CHiPS is its ability to provide a single pass heat integration, allowing the user to consider heat integrated processes at this early stage of synthesis. This feature can be used to much advantage at this stage as will be illustrated in the examples in section 6.6. CHiPS uses discrete quantities to reduce the amount of calculation needed. In the case of heat integration this is done by extending the stream definition to contain heat flows, which are called *virtual heat links* in CHiPS. The discrete nature of the heat flows means that further improvement can be achieved when a more detailed design is considered. The model described in the previous chapter was used with genetic algorithms in a continuous search to optimise the solution found initially by the discrete branch and bound search [80]. However considerable gain is attained already at this first stage as the examples in section 6.6 demonstrate.

Once the synthesis process is complete CHiPS provides the user with a set of n best solutions that are suitable for the first stages of the synthesis process and can be further refined. The user can choose the number n of best solutions. The success and reliability of the answer is very much dependent on the models used. The user can add on custom built models to serve their particular purposes. This is done with help of a built in Unit Model Interface [81]. Hence it is relatively easy to implement the azeotropic shortcut distillation model and add it to the CHiPS library of built-in models.

6.2 Adding the Shortcut Azeotropic Distillation Model with the Unit Model Interface

The Unit Model Interface (UMI) enables the user to extend the library of unit types (models) that CHiPS can use to synthesise the flowsheet. The unit types are usually written in FORTRAN or C [81]. The model developed here was written in FORTRAN 90.

The shortcut azeotropic distillation unit model is decomposed into six modules. These are FORTRAN routines and are divided into two groups. One group is used for initialising the model settings and the other actually defines the unit operations to perform.

6.2.1 The Initialisation Group

Four subroutines and functions must be set up to define the model variables.

Subroutine init

Subroutine *init* is used to set default values for all variables that can be set by the user. Table 6.1 shows the variables that can be set for this model and their default values.

For nonideal mixtures it is found that the factor multiplying the minimum reflux ratio to obtain the operating reflux ratio should be, at least, 1.5 [58]. This fact has been confirmed by full rigorous simulation runs that were done to test results obtained here [49].

The reference temperature is left undefined initially. The user should specify the reference temperature to be used in the calculations of certain physical proper-

Variable	Description	Default value
reclightkey	light key component recovery	0.99
recheavykey	heavy key component recovery	0.99
refluxfactor	reflux ratio factor	1.5
trayefficiency	tray efficiency	1.0
userreftemp	user set reference temperature	-1 (undefined)
tolerance	tolerance	1×10^{-5}
plotgraphs	plot equilibrium diagram of the separation	false
mindistboundary	min. distance from feed to distillation boundary	0.05
nstagesequation	equation for calculation of number of stages	2

Table 6.1: Variables that can be set in the shortcut azeotropic distillation model.

ties, such as reference enthalpy and entropy. This may, however, not be necessary. If the temperature remains undefined the model will check it and reset the variable to $298K$ if the value is required.

The tolerance is set to 1×10^{-5} by default, mainly due to the precision used by the physical properties package as described in section 6.3.

The model also provides the ability to plot the ternary diagram and operating path at infinite reflux for each column designed. This feature was initially implemented for debugging and easy visualisation of the separation procedure. It is therefore restricted to mixtures with one azeotrope only and, at the moment, to a two column separation structure, as shown in the examples of section 6.6. It can be switched off for other cases, but it is also possible to update it to a more general case.

The minimum distance from the feed to the distillation boundary is currently used to determine the feasibility of crossing the boundary when the feed is on its concave side and the products are both on the convex side. This variable will be withdrawn in the near future since crossing the boundary is feasible as long as the

feed is located between the arc of the distillation boundary and the straight line that connects its extreme points. Thus, upon checking whether the feed is on the concave side of the boundary, a further check can be done to ascertain if it lies between the arc and the straight line.

Two methods can be used in the model for calculating the number of stages as described in chapter 5. The Gilliland method was chosen as default because from experience the Eduljee equation 5.27 usually calculates a smaller value for the number of stages. From observation of full rigorous simulations, the number of stages is usually slightly underestimated with the Gilliland method [49].

Function setvar

This function allows the user, and also the package during the optimisation, to set the particular variables that are initialised in subroutine *init.*

Function getvar

This function is used by the package to retrieve the current values for the variables that can be changed in the model and were initialised by subroutine *init.*

Function start

Function *start* ensures that all remaining settings required are implemented. These include, for instance, setting the upper and lower limits for variables such as operating pressure and reflux ratio factor. These variables can be used for further fine tuning in a continuous fashion in a next stage of design, after the initial candidate flowsheets have been defined, as shown by Fraga and Matias [80].

6.2.2 The Design Group

By the time CHiPS uses this part of the model, all required initialisation of the model variables has been done and the input stream has been defined. At the

moment CHiPS can only deal with one feed stream for each model, so the azeotropic distillation column can have only one feed, although more than two products are allowed. However the shortcut procedure overcomes this restriction. Since it uses an infinite reflux, both the feed and products are of relatively insignificant size when compared to the infinite reflux. Hence their location and number becomes irrelevant. Other input streams can be added as other stream types called *make-ups* and, in the latest version, *recycles.* The model must have information on the recycles and make-up streams required. CHiPS uses this information and the product specifications to decide on the feasibility of the final flowsheet, i.e. if there is no stream in the process that fits the requirements for the recycle stream to be used in the unit, the search continues for another feasible flowsheet.

The design functions are called by CHiPS when needed to exhaust all possible flowsheet alternatives during searching.

Function procstream

Function *procstream* is used once for each stream found during the search. It allows the performance of some preliminary work on the stream, such as sorting the components by their relative volatility. The function will also pass on information to the optimiser regarding the number of make-up streams, number of recycles and the size of the family of designs to be done for the combination of stream and model.

Function design

Function *design* performs all design calculations for the given feed stream. The type of calculation is specified by a combination of two variables: *task* and *counter.* The variable *counter* determines which split is being considered. The variable *task* designates if

- The whole family of designs is to be calculated.

- A specific member of the family is to be designed. Usually this is requested after the whole family is calculated, e.g. the user requests that the optimal flowsheet be designed in order to see the design specifications.

- A design with certain specified variables can be requested by the optimiser after the first stage is completed. The variables that can be used in this model for further fine tuning are the operating pressure and the reflux ratio factor, as seen in section 6.2.1

The shortcut procedure is applied for the requested *task* and *counter*. The column design variables are determined and, if the calculation is successful, costs, heating and cooling requirements are computed using the calculated output flows and operating conditions. They are then used by CHiPS to analyse the possibility of heat integration and to cost the exchangers necessary to meet the heating and cooling requirements.

6.3 Physical Data

CHiPS has its own built in physical properties calculation. It is based on the Kistakowski method [82], which is not reliable for the azeotropic mixtures being studied in this work due to its approximate nature. CHiPS also has a link to PPDS[16]. In the current work PPDS is used for the physical property calculations within CHiPS. The PPDS version available is the single precision version. Thus the maximum accuracy used is 1×10^{-5}, hence the choice of default value for the variable *tolerance* in section 6.2.1. The physical properties used in the case studies were calculated using UNIFAC.

6.4 Cost Function

The optimisation done by CHiPS is based on the best cost. The cost correlations used are from Rathore *et al.* [73]. They have been updated by a factor of 10 as pointed out by Fraga [83]. All costs are in US$. The column cost is given by

$$4.34\left[7620 \times D_c\left(\frac{H_c}{12.2}\right)^{0.68}\right] \tag{6.1}$$

where D_c is the column diameter and H_c the column height. A correction factor of

$$[1 + 0.0147\,(P - 3.4)] \tag{6.2}$$

is used for pressure greater than 340 kPa.

The instrumentation cost is fixed at US$ 4,000.00 and the installed cost of trays is given by

$$70\left(\frac{m}{\eta}\right)\left(\frac{D_c}{1.22}\right)^{1.9} \tag{6.3}$$

for m trays with a tray efficiency of η. Other costs, such as maintenance cost factor and heat exchanger cost are automatically done in CHiPS.

6.5 Entrainer Selection and Feasibility

The model developed assumes that an entrainer has been chosen beforehand and it is fed as one of the components in the feed mixture. The position and number of feeds is irrelevant in this shortcut procedure because we are considering operation at infinite reflux. The fine tuning of entrainer and feed location is left to the next stage of synthesis where a full rigorous simulation model must be used.

At present the feasibility check is simple because a fixed structure of two distillation columns in sequence performing a direct split has been used initially. In this case the feed to the system must be located on the concave side of the boundary for the separation to be feasible. The column product that lies close to the boundary must be a near binary mixture of the other two components.

6.6 Case Studies

6.6.1 Analysis of Example Mixture

The shortcut azeotropic distillation unit has been tested first in a simple mixture containing one binary maximum boiling azeotrope. Most of this testing has been done with CHiPS version 8.0, which did not yet use recycles. Both the unit and optimiser had to undergo adaptations so the unit could be implemented successfully.

The ternary mixture of acetone, chloroform and benzene has been used in examples of azeotropic distillation in the literature [6] [36]. It is a good starting point to test the procedure because the data and behaviour are reasonably well known. Benzene is used as an entrainer to separate the azeotrope forming components,

acetone and chloroform. The equilibrium diagram for the mixture at 100 kPa is shown in figure 6.1.

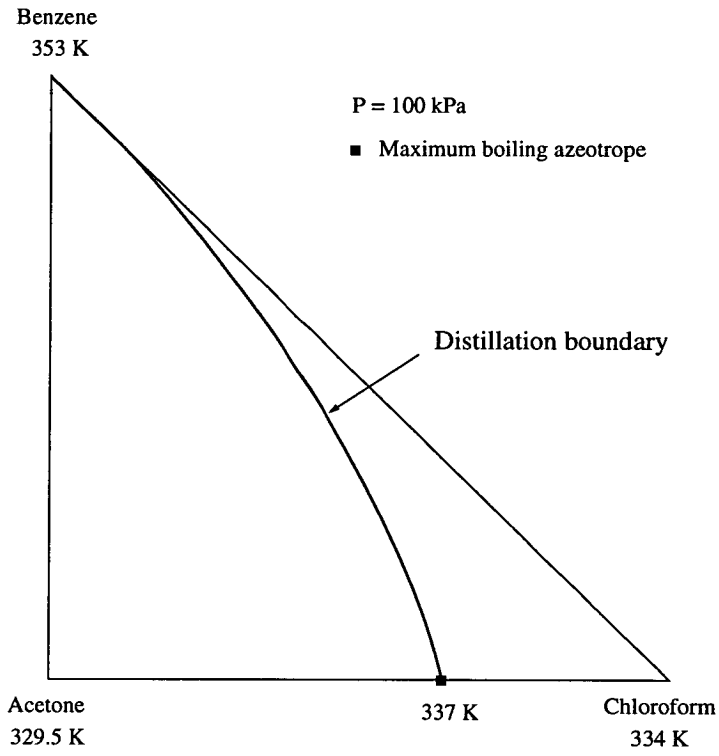

Figure 6.1: Equilibrium diagram for a mixture of acetone, chloroform and benzene at 100 kPa.

The maximum boiling azeotrope is a saddle point of composition 37.2% in acetone and 62.8% in chloroform, as calculated by PPDS. Benzene is the highest boiling component in the diagram, as can be seen from table 6.2.

The acetone and chloroform vertices are unstable nodes and benzene is a stable node. According to the literature [6] [36] the mixture can be split into sequences of two or three columns. The separation of this mixture into its components includes a column that operates 'across the boundary', i.e. its feed and products are on opposite sides of the distillation boundary. Doherty and Caldarola [31] had dismissed this type of arrangement initially because they consider that it is not economically attractive and doubts exist concerning the operability and

Component	Flow (kmol/hr)	Boiling Temperature (K)
Acetone	36.0	329.2
Chloroform	24.0	334.3
Benzene	40.0	353.2

Table 6.2: Feed composition and Boiling temperature of singular points in the system acetone, chloroform and benzene at 100 kPa

controllability of such a column. These are issues that are not considered at this first stage, but should be considered at the next stage, when a small set of best alternatives has been selected. The data obtained in this example was used to perform a full rigorous simulation and the sequence showed considerable stability towards the wanted profile [49].

Figure 6.2 shows the two column direct split arrangement. Since the distillation boundary can only be crossed from the concave side the feed point, *Feed*, has the composition given in table 6.2. Otherwise it would be impossible to obtain the three component products without initially mixing the feed with a stream that places the mixture on the concave side of the boundary.

This is an interesting arrangement in that only two columns are required to separate the three components. However, the second column operates on the opposite side of the boundary from its feed. To enable separation with this arrangement a sufficient quantity of benzene must be present in the feed to the first column. Benzene is therefore recycled from the second column and mixed with the original feed. This operation moves the overall feed composition in the direction of the pure benzene vertex and the bottom product will have only traces of acetone.

A second alternative for separating this mixture is that shown in figure 6.3. In this case the second column performs an indirect split by separating benzene as a bottom product and a binary mixture of acetone and chloroform as the top product. This mixture does not have the correct specifications of a final

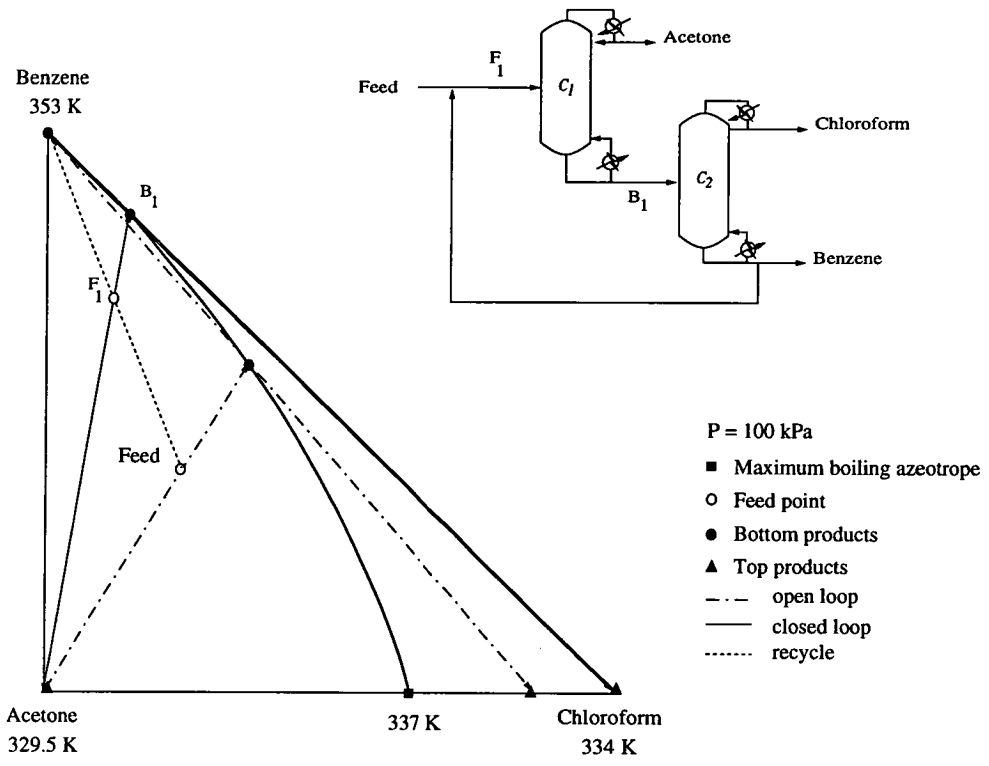

Figure 6.2: Direct split of a mixture of acetone, chloroform and benzene in a two column structure.

product but is on the opposite side of the boundary from the original feed. Hence, chloroform, which is locally the most volatile component, can now be obtained as a final product, but not acetone. The third column is therefore separating a binary mixture into the remaining specified product, chloroform, and a mixture close to the azeotrope composition. This mixture can be recycled and mixed with the initial feed to the first column, as shown, moving the feed composition of the first column to a mixture poorer in benzene. In the limit the bottom product of the second column would be close to azeotropic composition, but still on the opposite side of the boundary from the feed. The infinite reflux distillation profile would follow the distillation boundary.

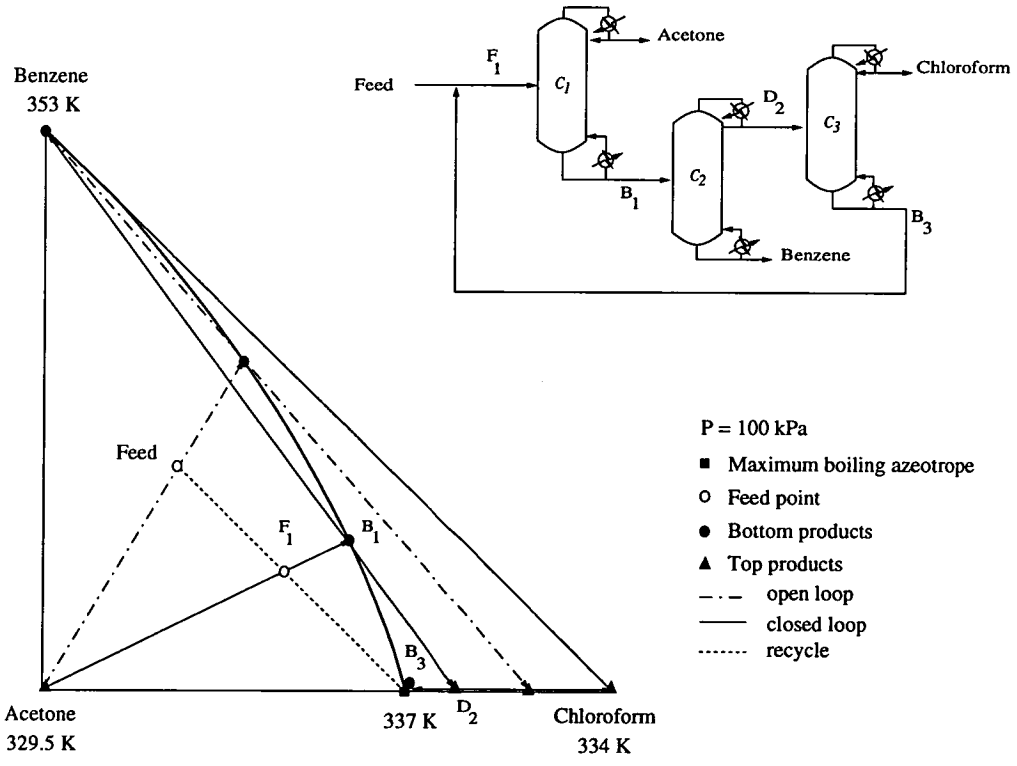

Figure 6.3: Direct/Indirect split of a mixture of acetone, chloroform and benzene in a three column structure.

Starting the separation in the first column with an indirect split, by first separating benzene as a bottom product, will lead to an infeasible separation of all components, as can be seen in figure 6.4. A binary mixture of acetone and chlo-

roform is obtained as the top product. This mixture can be separated into a top product of acetone and a mixture close to azeotropic composition, but on the same side as the original feed. It is thus impossible to separate this mixture, and obtain chloroform as a product. There is also no obvious recycle structure that would lead to this.

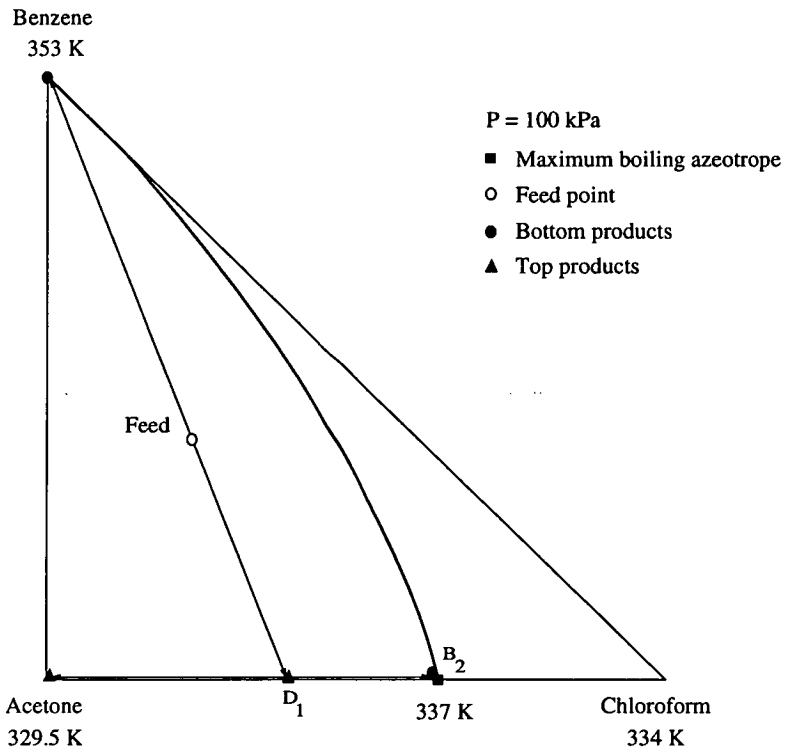

Figure 6.4: Indirect split leading to infeasible separation of a mixture of acetone, chloroform and benzene.

One last alternative is to perform an intermediate split in the first column, obtaining essentially two binary mixtures of acetone + chloroform and benzene + chloroform. The mixture of benzene and chloroform is readily separated into the two pure components. The mixture of acetone and chloroform is separated into acetone and a mixture close to azeotropic composition, which can be recycled as in the previous alternatives. Figure 6.5 shows this separation structure.

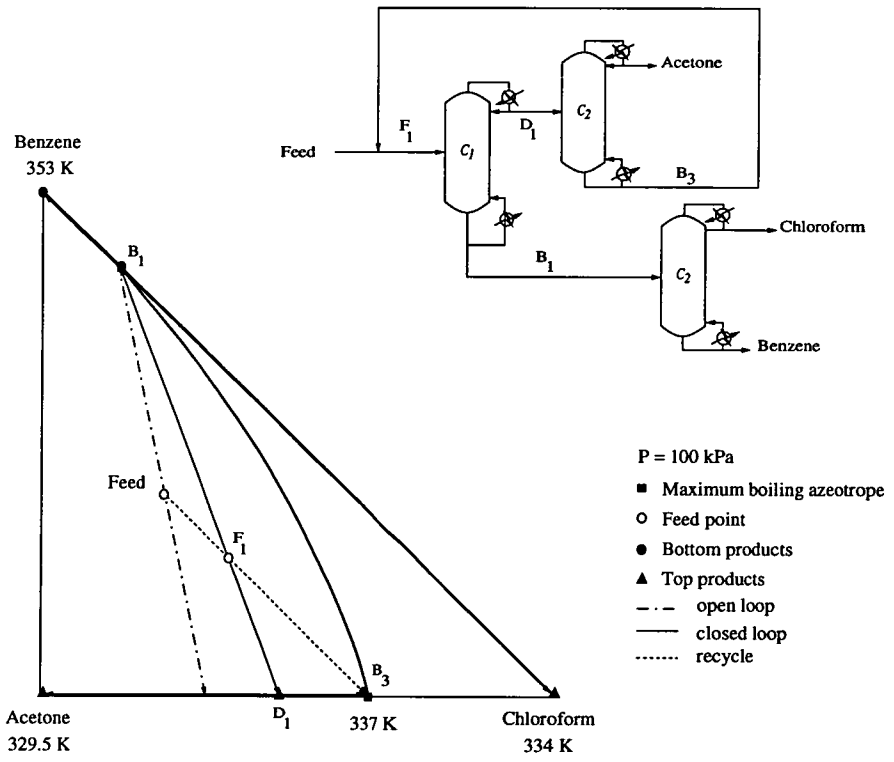

Figure 6.5: Intermediate split structure for separation of a mixture of acetone, chloroform and benzene.

6.6.2 Model Structure

Ideally the shortcut azeotropic distillation model should be able to allow CHiPS to build these sequences automatically and decide on the best. However in all cases recycles are required which CHiPS was unable to support at the time of this study. It was decided to test the procedure by using a fixed two column structure corresponding to the example in figure 6.2. This still leaves decisions, such as the choice of operating pressures in each column and, more importantly, it allows the evaluation of a useful feature of CHiPS, i.e. heat integration. The operation of both columns at different pressures also provides an interesting analysis of the mixture and azeotrope behaviour at different conditions.

The resulting unit thus consists of two distillation columns instead of one and has overall one feed and three products. The recycle is totally internal to the unit so it does not exist as far as CHiPS is concerned.

6.6.3 Low Recovery Example

An initial study was done using a low key component recovery. The results have been summarised in a publication by Matias *et al.* [84]. It was found that the procedure had difficulty converging for component recoveries higher than 93%. A later examination of the convergence procedure showed that this was due to a higher accuracy being used in the material balance, than in the physical properties package. Thus the material balance at infinite reflux was unable to converge after the physical properties values retrieved from PPDS had converged. This was subsequently corrected by using the same accuracy in the material balance in the physical property package. Hence the default value of 1×10^{-5} for the tolerance variable in section 6.2.1. This value still gives an acceptable accuracy and enables the convergence of the unit.

In this example the feed described in table 6.2 was separated for

- Light key recovery in top product 90%.
- Maximum heavy key in top product 5%.

The study was carried out in a range of operating pressures from 100 kPa to 500 kPa. As CHiPS uses discrete quantities the pressure range was divided into ten discrete pressure values uniformly in a *log* basis. Thus there is a total of 100 pressure combinations, i.e. alternative designs, for the overall system.

CHiPS calculated the best configuration for two distinct cases. In the first case no heat integration was requested. The result obtained is plotted in the equilibrium diagram shown in figure 6.6. Point P_1 corresponds to the acetone product, P_2 to the chloroform product and P_3 to the benzene product. A second run was performed and this time CHiPS was requested to consider heat integration. The result is plotted in figure 6.7. F_1 is the feed to the first column after the recycle has been added to the initial system's feed. F_2 is the feed to the second column. It is also the bottom product of the first column.

The calculation of the minimum number of stages converges quickly. The calculated number of stages remains constant most times from the second iteration until the mass balance is met. An average of five material balance iterations is required to solve the infinite reflux calculation. The full synthesis both for heat integrated and non-heat integrated examples each took around 30 minutes to compute on a SUN SPARCstation 2.

Figures 6.6 and 6.7 show that the difference in operating pressures between the first and second columns is greater for the heat integrated sequence. Figure 6.7 clearly shows how the distillation boundary moves as pressure changes. In this case altering the boundary position does not affect the system, due to the composition of the feed to the second column. There may be cases, however, where this could be successfully used to advantage, by moving the azeotrope or even making it disappear for certain operating pressures. It is possible to have a

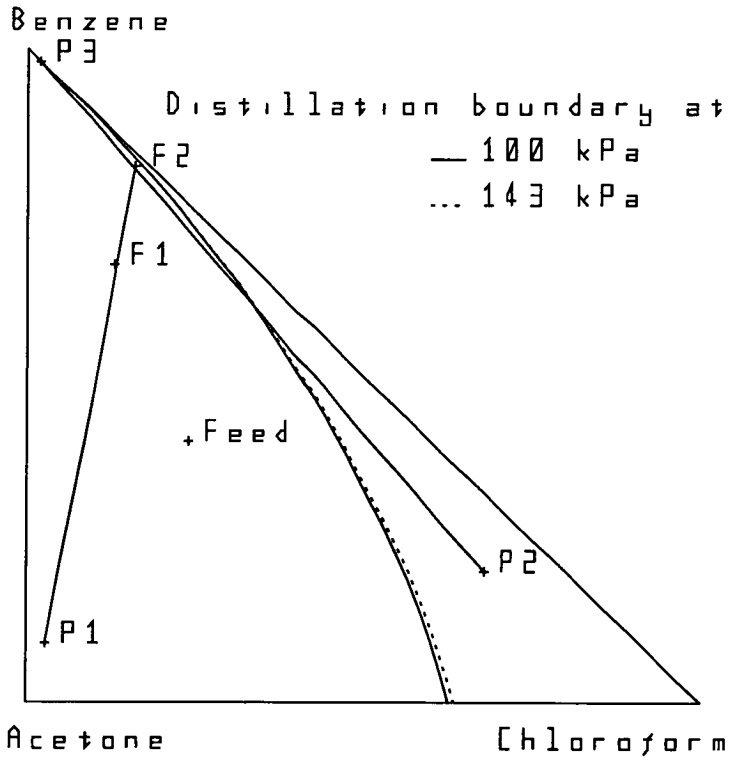

Figure 6.6: Separation of acetone, chloroform and benzene at low recovery in a two column structure with no heat integration

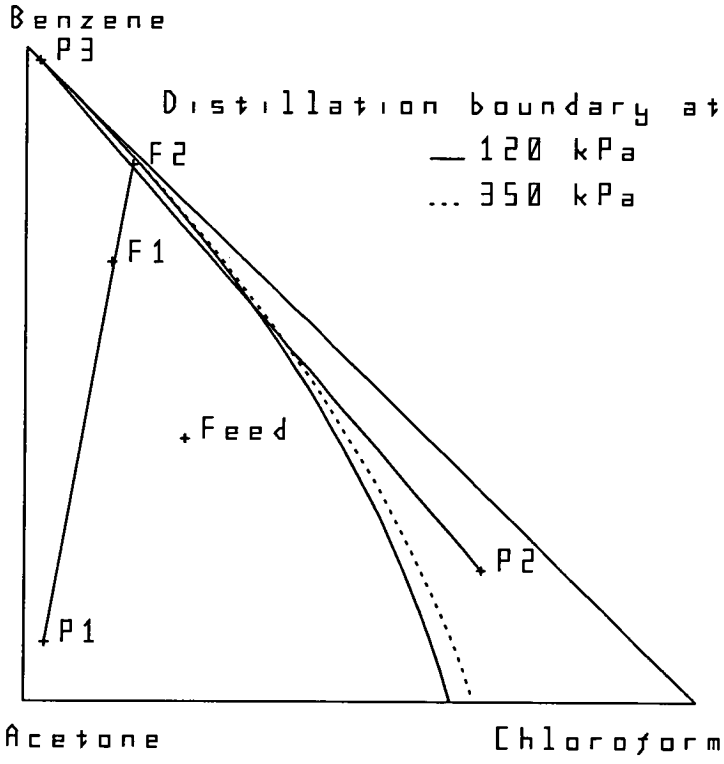

Figure 6.7: Separation of acetone, chloroform and benzene at low recovery in a two column structure with heat integration

setting where the second column operates at lower pressure, placing the feed to the second column on the other side of the boundary thus significantly changing the operating conditions of the second column. Although, in this example, it did not prove to be the optimal combination in terms of cost, consideration of issues such as operability may affect this decision.

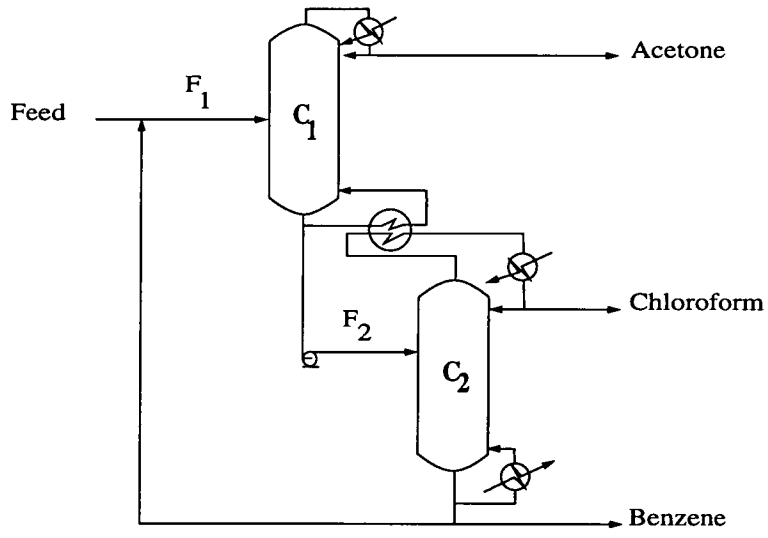

Figure 6.8: CHiPS heat integrated structure for the two column structure example

Figure 6.8 shows the heat integrated structure calculated by CHiPS for this example. Assuming a stage efficiency of 100%, the first column in the heat integrated separation sequence was designed to operate at 120 kPa with a reflux ratio of 0.87 and 27 stages. The second column operates at 350 kPa with a reflux ratio of 7.44 and 28 stages. The sequence obtained when heat integration was not considered has the same number of stages in each column as for the heat integrated case. Reflux ratio in the second column is 7.75, slightly higher than in the heat integrated case. The heat integrated structure operates at higher pressures but the reduction in energy costs compensates for compression costs. Heat integration results in a cost saving of approximately 10%.

Table 6.3 shows the cooling and heating requirements for the heat integrated

two column arrangement. CHiPS integrated the tops of column 2 with the bottoms of column 1, transferring the required 3.4 GJ/hr to the first column reboiler and removing the excess amount of heat remaining on the tops of the second column with cooling water at 305 K. Medium pressure steam was used in the second column reboiler.

Unit Type	Pressure (kPa)	Inlet Temperature (K)	Outlet Temperature (K)	Duty (GJ/hr)
Column 1 Condenser	120	336.1	335.1	0.7
Column 1 Reboiler	120	354.4	355.9	3.4
Column 2 Condenser	350	383.8	382.2	6.0
Column 2 Reboiler	350	398.7	398.8	7.9

Table 6.3: Operating parameters for the two column heat integrated sequence.

These results are, however, not completely reproducible by full rigorous simulation. They are dependent on the recycle calculation, which is internal to the unit and assumes a high purity benzene product being recycled to calculate the recycle flow required. Hence, the unit as it is should be used for sharp distillation only. The next example shows results obtained in this case.

6.6.4 High Recovery Example

The same example studied in section 6.6.3 was now tested using

- Light key recovery in top product 99.9%.
- Maximum heavy key in top product 0.1%.

The separation was studied for a wider range of pressures this time to evaluate the model's behaviour and capability under more extreme conditions. Hence operating pressures were varied between 100 kPa and 2000 kPa. Similarly to the

previous example the pressure range was also divided into ten discrete pressure values. Figures 6.9 and 6.10 show results without and with heat integration respectively.

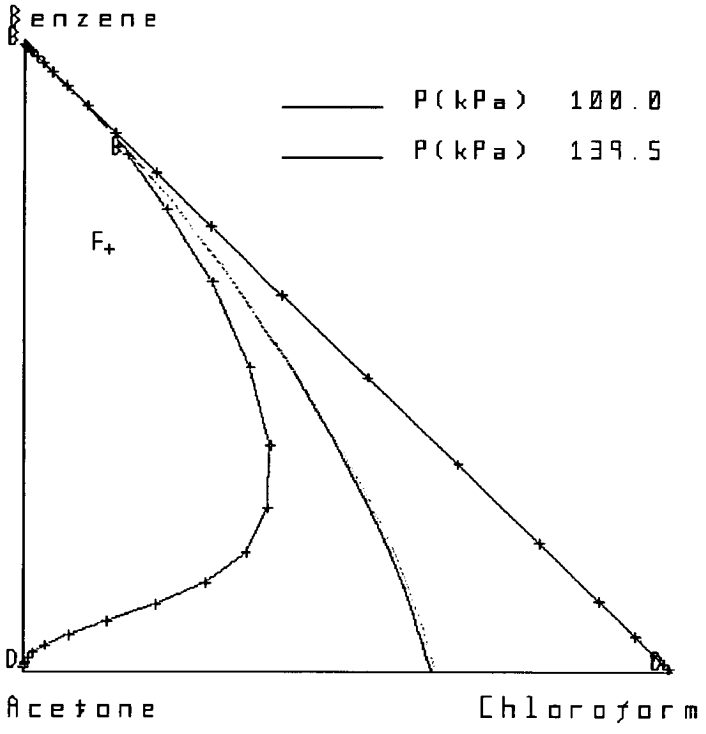

Figure 6.9: Separation of acetone, chloroform and benzene at high recovery in a two column structure with no heat integration

The infinite reflux profile for the second column corresponds to that of a binary mixture separation and lies on the edge of zero acetone composition. The cost for the structure without heat integration is $\$127,707.94/yr$, whereas the heat integrated structure has a cost of $\$115,857.67/yr$. The reduction is, again, nearly 10%. The difference in cost shows that it is worth considering heat integration at this first stage of design when shortcut procedures are being used.

Convergence of the shortcut procedure, even for high key component recovery, is fast taking a maximum of six iterations. However the total calculation time

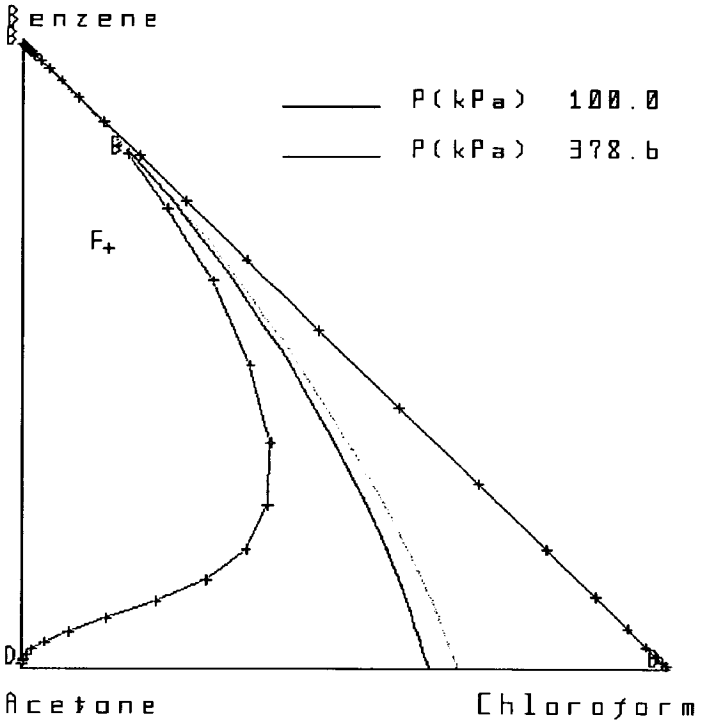

Figure 6.10: Separation of acetone, chloroform and benzene at high recovery in a two column structure with heat integration

used by CHiPS slightly exceeds one hour due mainly to the higher number of stages required for the second column.

The number of stages in the first column remains practically the same as in the low recovery example because acetone, the component recovered here, is easy to separate from the rest of the solution. However, in the second column the high purity required for both benzene and chloroform demands that the lower part of the column operates close to the distillation boundary while separating a product at high purity. As the column profile at infinite reflux in figure 6.9 shows the composition change between stages is small and a great number of stages is needed to achieve the required purity.

The minimum number of stages calculated during the iteration usually remains constant after the second iteration. At pressures greater than 1500 kPa the azeotrope disappears. The shortcut procedure is not so useful when there are no azeotropes present because it requires a column operating at infinite reflux with a great number of stages to achieve the component recoveries requested. The infinite reflux profile will in fact run along the sides of the equilibrium diagram. Hence the calculation is lengthier and the method invariably fails because the maximum number of stages of 200 allowed by default is exceeded. A different unit should be used for nonideal mixtures with no azeotropes, one that uses rigorous physical properties but avoids the infinite reflux calculation. Table 6.4 summarises the results obtained for this example.

	Without heat integration		With heat integration	
Variable	Column 1	Column 2	Column 1	Column 2
Pressure (kPa)	100.0	139.5	100.0	378.6
Reflux ratio	4.78	16.11	4.78	15.25
Number of Stages	26	43	26	46

Table 6.4: Results of the synthesis of the high recovery case.

The values of the design variables were then used to perform a full rigorous simulation of the separation process [49] using PDIST which was developed by McKinnel [50]. It was only possible to test the case where no heat integration is considered, since heat integration is not available with PDIST. Figure 6.11 shows the composition profiles of the columns operating at the conditions described in table 6.4. The results are similar to those obtained by the shortcut procedure shown in figure 6.9, although the purity achieved in the full rigorous simulation is not as high as with the shortcut procedure.

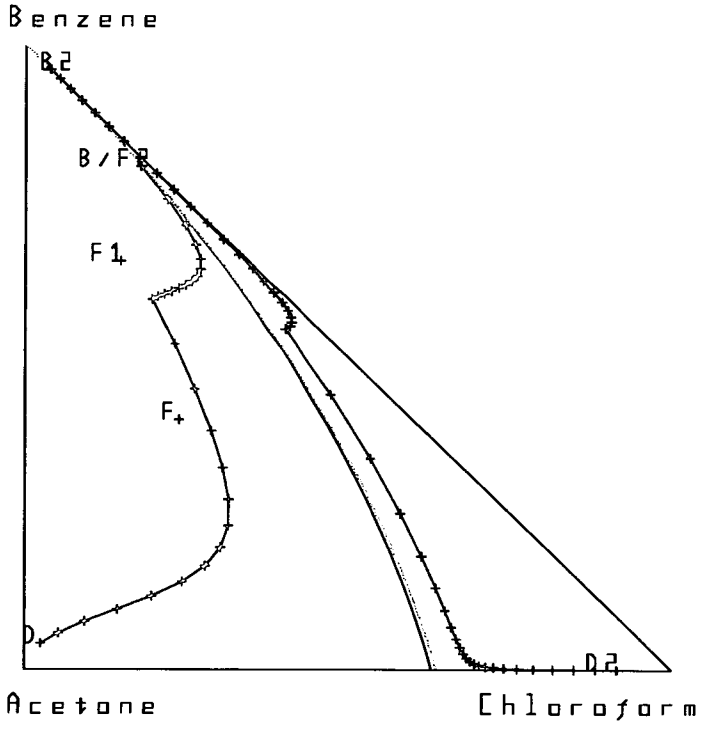

Figure 6.11: Full rigorous simulation of the separation of acetone, chloroform and benzene at high recovery in a two column structure with no heat integration

This is due in part to the recycled benzene not being as pure as that assumed for the shortcut unit. But in spite of the use of shortcut equations such as the Underwood equation for the minimum reflux ratio and the Gilliland equations for the number of stages, the agreement is quite good.

As a matter of interest McKinnel [49] also found that the dynamic simulation of the second column showed a very stable behaviour towards the steady state, even when the operating profile moved across the boundary during simulation. This indicates that operation of the second column is not as unstable as it is believed.

The second column requires a large number of stages and a high reflux ratio. This is due to the fact that a large number of stages is needed in the section of the column where the composition profile is closer to the saddle azeotrope and in the rectifying section where operation is close to the distillation boundary profile, as had also been observed for the shortcut procedure.

6.6.5 Comparison of Performance Against a Full Rigorous Model

The shortcut procedure shows fast and reliable convergence in the calculation of the minimum number of stages. But how does it compare against a full rigorous calculation? The running time needed to calculate the number of stages by the shortcut procedure was compared against the time taken by the RADFRAC model from Aspen Plus [60].

Aspen's RADFRAC model was used in design specification mode to design the first column of the example presented in section 6.6.4. Similarly to the shortcut procedure the light and heavy key recoveries were specified and the overall feed to the column included the entrainer flow as calculated by the shortcut procedure. An initial estimate was required for the number of stages. Also a search interval between 2 and 60 was specified. The reflux ratio entered was the same as that calculated in the example of section 6.6.4.

Aspen took 16.7 seconds to calculate the number of stages and flows when an initial estimate near the upper bound of the search interval was given. Twelve iterations were required for convergence. When an initial estimate of 30 stages

was used the calculation time increased to 30 seconds and the number of iterations to 20, even though the initial estimate was much closer to the solution. Looking at the iteration output information it is clear why this happens. The iteration does not follow a smooth path, the number of stages varies between higher and lower values until the solution is finally achieved. Performance is also sensitive to the search interval given leading the calculation not to converge in some cases. In this case there was already an idea of the number of stages, as it had been calculated by the shortcut procedure, but where that option is not available some trial and error will be required to obtain the solution.

The same data was used in the stand alone infinite reflux shortcut procedure. In this case convergence is both fast and smooth taking 1.38 seconds to obtain the number of stages with five iterations required. The convergence is also robust since the number of stages remains constant from the second iteration leaving only the material balance to converge.

6.7 Conclusions

The agreement between results obtained using the rigorous shortcut procedure and the full rigorous simulation in the high recovery example shows that the rigorous shortcut procedure is suitable for preliminary design. The convergence of the iterative procedure calculating the minimum number of stages is fast and robust. It takes a maximum of six iterations in the worst case. The minimum number of stages is usually found after two iterations. The remaining iterations are used to converge the physical properties in order to obtain a distillation profile that fits the material balance around the column, which is the condition for a column operating at infinite reflux.

The procedure includes rigorous phase equilibrium calculations, but avoids a complete simulation of the column by using a nonideal extension to the Fenske

equation for the calculation of the minimum number of stages in an iterative manner. Both the shortcut procedure and full rigorous simulation show stability in convergence for the example studied.

Avoiding full rigorous simulation reduces computing time and, when the shortcut procedure is used with CHiPS, it enables the generation of preliminary designs including heat integration. The user can then concentrate on the smaller set of alternatives generated and analyse them in more detail.

At present the model used is fixed, containing two distillation columns separating a mixture with a maximum boiling azeotrope. A more general version using only one distillation column is required. This model should be able to accept recycles which are now supported in CHiPS. The two column model contains an internal recycle which assumes pure entrainer being recycled from the second column. Hence, an error is incurred when low key component recoveries are specified. This error should be overcome when the recycle can be set up more realistically, i.e. when a stream taking into account the impurity in the recycle is introduced. The recycle stream is the main difference between the shortcut and full rigorous simulation calculations, since the latter uses the actual output flow of the bottoms from the second column.

The infinite reflux calculation becomes lengthy and uses a great number of stages when a high recovery is specified and no azeotrope is present. In fact the distillation profile at infinite reflux follows the sides of the equilibrium diagram triangle in this case. Whereas the method still performs for this case, it is not efficient and should not be used. Hence a flag has been introduced in the model to avoid any further calculations when no azeotropes are present. A different model should be developed to use for zeotropic distillation.

Chapter 7

Conclusions

Considerable research has been given to reducing the amount of computing time required for the simulation of nonideal separations. This decade has seen considerable development in synthesis tools that include nonideal distillation. This thesis has addressed both steady state simulation of systems with nonideal mixtures and development of models for synthesis of separation processes for nonideal mixtures.

Reduction in computing time, while maintaining accuracy in the final result, can be achieved in two different ways:

- Approximate procedures can be used for the calculation of physical properties of the mixture.

- Shortcut design procedures can be used in conjunction with rigorous physical properties.

This work investigated both ways of reducing computing time.

7.1 Approximate Procedures

7.1.1 Physical Property Calculation

Most work done in this area has been related to dynamic simulation. When approximate functions are used to calculate physical properties there is usually a need to keep function parameters up to date as conditions change, since the physical properties of nonideal mixtures do not remain constant. Several approximate functions to calculate the component liquid activity coefficient in a mixture were tested. The Margules-like equation represented by equation 3.17 in chapter 3 showed a good fit as long as the mixture purity remained below $70 mol\%$. This equation also has the advantage of requiring only one set of rigorous values to fit the parameters. As it is linear in its parameters it can be easily fitted using a method such as Gauss elimination. For purity higher than 70% the parameters varied rapidly with the composition. Using the rigorous physical property package in this range of composition becomes the best solution.

The use of arbitrary rational functions was not successful. It confirms that a physically based solution should normally be used instead of a totally arbitrary one.

A different approach to the approximation of the liquid activity coefficient is the use of a rigorous physical package in a dual level flowsheeting environment. The rigorous physical property package is used to calculate the bubble point for a given pressure and composition. Two levels of calculation exist, one used for local calculation of the relative volatilities and the other to solve the material balance. Three different strategies were studied.

- *The parallel method* where the material balance and the physical properties are converged simultaneously.

- *The inside-out method* where the physical properties are converged in an outer level and the material balance in an inner level.

- *The structural evolution method* which can use either of the two techniques described above, but starts by converging a simplified flowsheet, with fewer units, subsequently adding more until the whole flowsheet is converged.

The parallel method gave the best performance from the dual level approaches, although no reduction in time was effectively accomplished when compared to the conventional approach where the rigorous physical property package is used to retrieve the vapour liquid equilibrium conditions. The number of iterations in each case is similar but it was found that the rigorous physical property package takes the same amount of time to perform both the bubble point and the VLE calculation. Hence, some gain will be achieved with a physical property package that is actually faster in calculating just the bubble point for a mixture. As well as using repeated substitution the Wegstein method was also used to accelerate the convergence procedure. It was found that the convergence path becomes more erratic as acceleration is used more frequently, sometimes leading to divergence. Acceleration should be used no more frequently than every fifth iteration for best results.

The inside-out method worked well and it was fast but not for all cases. The original Cavett mixture failed to converge with the error showing a cyclic behaviour through the iteration. However the method performed well with nonideal mixtures.

The results obtained by using approximate physical properties highlighted the importance of using accurate physical properties in the separation of nonideal systems. Experience gained in this analysis led to the development of an effective shortcut procedure for use in simulation and the preliminary stages of synthesis.

7.1.2 Rigorous Shortcut Procedure for Nonideal Distillation

The aim of a thermodynamically rigorous shortcut procedure is to combine rigorous phase equilibrium calculations with shortcut design calculations. Thus the complete rigorous simulation or design of the distillation column is avoided. The rigorous shortcut procedure developed in this work includes:

- The calculation of the minimum reflux ratio by the Underwood method using rigorous physical properties at the feed.
- The calculation of the minimum number of stages via an iterative procedure that assumes a column operating at infinite reflux and uses rigorous physical properties for each stage.
- The calculation of the effective number of stages using the Gilliland correlation.
- The cost calculation using correlations given by Rathore *et al.* [73].

The procedure has been used to implement a model for use in the automated synthesis package CHiPS which includes heat integration. Results obtained with the rigorous shortcut procedure were found to be in good agreement with those of a full rigorous simulation. The procedure also proved to be considerably efficient and robust when compared to full rigorous simulation. The shortcut procedure is, therefore, a suitable tool for the first stage of design, where a full rigorous model is unnecessary and too lengthy in calculation time.

By taking advantage of the heat integration feature in CHiPS a reduction in 10% was obtained for the cost at this first stage of design. These results emphasise the importance of considering heat integration even at this first stage. Further optimisation using genetic algorithms with the same model showed an improvement of another 15% in the cost [80].

7.2 Future Directions

The use of simplified functions for the calculation of the physical properties in nonideal mixtures for steady state simulation and design still requires further investigation. The Margules-like equation 3.17 can, however, be implemented in a package such as CHiPS in a way that it is only used for mixtures where the composition of any component does not exceed 70%. The package should then be able to automatically switch to a different physical property calculation in the region of higher purity.

The shortcut procedure developed for nonideal distillation now requires generalisation. This step can be implemented as CHiPS progresses, particularly in the way it handles recycle streams. The model generalisation will also require a more detailed feasibility analysis to be implemented. This model can then be the starting point for the development of models capable of handling heterogeneous azeotropic mixtures, as well as reactive distillation. It is also necessary to develop a different model for use with nonideal mixtures that do not contain azeotropes. The rigorous shortcut procedure developed in the present work becomes too lengthy in those cases.

The inclusion of mixtures with more than three components is also possible but an efficient criterion that determines higher order azeotropes in multicomponent mixtures must be developed. Often multicomponent mixtures can be reduced to ternary mixtures after the easily separable components have been removed.

Appendix A

Bibliography

1. M. E. Leesley and G. Heyen. The dynamic approximation method of handling vapour-liquid equilibrium data in computer calculations for chemical processes. *Computers chem. Engng.*, 1:109–112, 1977.

2. M. Shacham, S. Macchietto, L. F. Stutzman, and P. Babcock. Equation oriented approach to process flowsheeting. *Computers chem. Engng.*, 6(2):79–95, 1982.

3. A. W. Westerberg, H. P. Hutchison, R. L. Motard, and P. Winter. *Process flowsheeting.* Cambridge University Press, 1979.

4. N. Ganesh and L. T. Biegler. A robust technique for process flowsheet optimization using simplified model approximations. *Computers chem. Engng.*, 11(6):553–565, 1987.

5. M. Hillestad, C. Sørlie, T. F. Anderson, I. Olsen, and T. Herzberg. On estimating the error of local thermodynamic models - a general approach. *Computers chem. Engng.*, 13(7):789–796, 1989.

6. J. M. Douglas. *Conceptual Design of Chemical Processes.* McGraw-Hill, 1988.

7. M. R. Fenske. Fractionation of straight-run pennsylvania gasoline. *Ind. Eng. Chem.*, 24(5):482–485, 1932.

8. E. R. Gilliland. Multi-component rectification, estimation of the number of theoretical plates as a function of the reflux ratio. *Ind. Eng. Chem.*, 32(9):1220–1223, 1940.

9. A. J. W. Underwood. Fractional distillation of ternary mixtures - calculation of minimum reflux ratio. *Journal Inst. Petrol.*, 32:614–626, 1946.

10. L. Laroche, N. Bekiaris, H.W. Andersen, and M Morari. Homogeneous azeotropic distillation: Separability and flowsheet synthesis. *Ind. Eng. Chem. Res.*, 31:2190–2209, 1992.

11. R. C. Reid, J. M. Prausnitz, and B. E. Poling. *The Properties of Gases & Liquids.* McGraw-Hill, 4rd edition, 1987.

12. J. M. Prausnitz, R. N. Lichtenhaler, and E. G. Azevedo. *Molecular thermodynamics of fluid-phase equilibria.* Prentice-Hall Inc., 2nd edition, 1986.

13. J. Gmehling. From UNIFAC to modified UNIFAC to PSRK with the help of ddb. In *Proceedings of ASPENWORLD 94 Conference*, November 1994.

14. H. P. Hutchison and C. F. Shewchuk. A computational method for multiple distillation towers. *Trans. Instn. Chem. Engrs.*, 52:325–336, 1974.

15. A. A. Barrett. *Improved process simulation using local representation of thermodynamic data.* PhD thesis, University College Dublin, 1978.

16. National Engineering Laboratory. PPDS *Physical Properties Data Service.* The Institution of Chemical Engineers, Rugby, England, 1981.

17. A. Barret and J. J. Walsh. Improved chemical process simulation using local thermodynamic approximations. *Computers chem. Engng.*, 3:397–402, 1979.

18. J. F. Boston and H. I. Britt. A radically different formulation and solution of the single-stage flash problem. *Computers chem. Engng.*, 2:109–122, 1978.

19. J. F. Boston. Inside-out algorithms for multicomponent separation process calculations. In *American Chemical Society Symposium Series 124*, volume 124, pages 135–151, 1980.

20. E. H. Chimowitz, T. F. Anderson, S. Macchietto, and L. F. Stutzman. Local models for representing phase equilibria in multicomponent, nonideal vapor-liquid and liquid-liquid systems. 1. thermodynamic approximation functions. *Ind. Eng. Chem. Process Des. Dev.*, 22:217–225, 1983.

21. E. H. Chimowitz, S. Macchietto, T. F. Anderson, and L. F. Stutzman. Local models for representing phase equilibria in multicomponent, nonideal vapor-liquid and liquid-liquid systems. 2. application to process design. *Ind. Eng. Chem. Process Des. Dev.*, 23:609–618, 1984.

22. S. Macchietto, E. H. Chimowitz, T. F. Anderson, and L. F. Stutzman. Local models for representing phase equilibria in multicomponent, nonideal vapor-liquid and liquid-liquid systems. 3. parameter estimation and update. *Ind. Eng. Chem. Process Des. Dev.*, 25:674–682, 1986.

23. W. R. Johns and V. Vadhwana. A dual-level flowsheeting system. In *Proceedings of PSE'85 Conference*, pages 37–54, Cambridge, 1985.

24. W. R. Johns and V. Vadhwana. Convergence studies in dual-level flowsheeting. *Chem. Eng. Res. Des.*, 64:332–340, 1986.

25. J. W. Ponton. Rapid approximate vapour-liquid equilibrium calculations. *Computers chem. Engng.*, 11(5):537–541, 1987.

26. S. Støren and T. Hertzberg. Local thermodynamic models applied in dynamic process simulation: a simplified approach. *Trans IChemE*, 72:395–401, May 1994.

27. M. Hager and K. Stephan. Evaluation of gas-liquid phase equilibria with local group models. *Chemical Engineering Science*, 49(23):3853–3860, 1994.

28. R. H. Ewell, J. M. Harrison, and L. Berg. Azeotropic distillation. *Ind. Engng. Chem.*, 36:871–875, 1944.

29. J. Perreguard. Model simplification and reduction for simulation and optimization of chemical processes. *Computers chem. Engng.*, 17(5/6):465–483, 1993.

30. S. G. Levy, D. B. Van Dongen, and M. F. Doherty. Design and synthesis of homogeneous azeotropic distillations. 2. minimum reflux calculations for nonideal and azeotropic columns. *Ind. Eng. Chem. Fundam.*, 24:463–474, 1985.

31. M. F. Doherty and G.A. Caldarola. Design and synthesis of homogeneous azeotropic distillations. 3: The sequencing of columns for azeotropic and extractive distillations. *Ind. Eng. Chem. Fundam.*, 24:474–485, 1985.

32. E. J. Hoffmann. *Azeotropic and extractive distillation.* Interscience Publishers, John Wiley & Sons, 1964.

33. J. Stichlmair, J. R. Fair, and J. L. Bravo. Separation of azeotropic mixtures via enhanced distillation. *Chemical Engineering Progress*, 85(1):63–69, 1989.

34. Z. T. Fidkowski, M. F. Doherty, and M. F. Malone. Feasibility of separations for distillation of nonideal ternary mixtures. *AIChE Journal*, 39(8):1303–1321, August 1993.

35. Van Dongen and D. B.. M. F. Doherty. Design and synthesis of homogeneous azeotropic distillations. 1. problem formulation for a single column. *Ind. Eng. Chem. Fundam.*, 24:454–463, 1985.

36. O. M. Wahnschafft. *Synthesis of separation systems for Azeotropic mixtures with an emphasis on distillation-based methods.* PhD thesis, Department of Chemical Engineering, Technical University of Munich, 1991.

37. M. F. Doherty and J. D. Perkins. On the dynamics of distillation processes - i. *Chemical Engineering Science*, 33:281–301, 1978.

38. M. F. Doherty and J. D. Perkins. On the dynamics of distillation processes - ii. *Chemical Engineering Science*, 33:569–578, 1978.

39. M. F. Doherty and J. D. Perkins. On the dynamics of distillation processes - iii. *Chemical Engineering Science*, 34:1401–1414, 1979.

40. M. F. Doherty and J. D. Perkins. On the dynamics of distillation processes - iv. *Chemical Engineering Science*, 37(3):381–392, 1982.

41. Van Dongen and D. B.. M. F. Doherty. On the dynamics of distillation processes-v. *Chemical Engineering Science*, 39(5):883–892, 1984.

42. R. H. Ewell and L. M. Welch. Rectification in ternary systems containing binary azeotropes. *Industrial and Engineering Chemistry*, 37(12):1224–1231, December 1945.

43. O. M. Wahnschafft, J. W. Köhler, E. Blaß and A. W. Westerberg. The product composition regions of single-feed azeotropic distillation columns. *Ind. Eng. Chem. Res.*, 31:2345–2362, 1992.

44. L. Laroche, N. Bekiaris, H.W. Andersen, and M Morari. The curious behaviour of homogeneous azeotropic distillation - implications for entrainer selection. *AIChE Journal*, 38(9):1309–1328, 1992.

45. N. S. Nikolaev, V. N. Kiva, A. S. Mozzhukhin, L. A. Serafimov, and S. I. Goloborodkin. Utilization of functional operators for determining the regions of continuous rectification. *Theor. Found. Chem. Eng.*, 13:418–423, 1979.

46. E. R. Foucher, M. F. Doherty, and M. F. Malone. Automatic screening of entrainers for homogeneous azeotropic distillation. *Ind. Eng. Chem. Res.*, 30:760–772, 1991.

47. O. M. Wahnschafft, J. W. Köhler, and A. W. Westerberg. Homogeneous azeotropic distillation: Analysis of separation feasibility and consequences for entrainer selection and column design. *Computers Chem. Engng.*, 18(Suppl.):S31–S35, 1994.

48. E. Rév. Crossing valleys, ridges and simple boundaries by distillation in homogeneous ternary mixtures. *Ind. Eng. Chem. Res.*, 31:893–901, 1992.

49. R. C. McKinnel. Personal communication, 1995.

50. R. C. McKinnel. *An Investigation Into the Application of Parallel Computers for the Dynamic Simulation of Chemical Processes.* PhD thesis, The University of Edinburgh, Edinburgh, 1994.

51. S. G. Levy and M. F. Doherty. Design and synthesis of homogeneous azeotropic distillations. 4. minimum reflux calculations for multiple-feed columns. *Ind. Eng. Chem. Fundam.*, 25:269–279, 1986.

52. J. R. Knight and M. F. Doherty. Design and synthesis of homogeneous azeotropic distillations. 5. columns with nonnegligible heat effects. *Ind. Eng. Chem. Fundam.*, 25:279–289, 1986.

53. M. V. Julka and M. F. Doherty. Geometric behaviour and minimum flows for nonideal multicomponent distillation. *Chemical Engineering Science*, 45(7):1801–1822, 1990.

54. Z. T. Fidkowski, M. F. Malone, and M. F. Doherty. Nonideal multicomponent distillation: Use of bifurcation theory for design. *AIChE Journal*, 37(12):1761–1779, December 1991.

55. L. Laroche, N. Bekiaris, H.W. Andersen, and M Morari. Homogeneous azeotropic distillation: Comparing entrainers. *The Canadian Journal of Chemical Engineering*, 69:1302–1319, December 1991.

56. J. G. Stichlmair and J.-R. Herguijuela. Separation regions and processes of zeotropic and azeotropic ternary distillation. *AIChE Journal*, 38(10):1523–1535, October 1992.

57. A. W. Westerberg. The synthesis of distillation-based separation systems. *Computers chem. Engng.*, 9(5):421–429, 1985.

58. M. F. Malone and M. F. Doherty. Separation system synthesis for nonideal liquid mixtures. *Foundations of Computer-Aided Engineering Process Design'94*, pages 9–18, July 1994.

59. O. M. Wahnschafft, T. P. Jurain, and A. W. Westerberg. SPLIT: A separation process designer. *Computers chem. Engng.*, 15:565–581, 1991.

60. Aspen Tech. *Aspen Plus user guide to release 8.3.* Aspen Technology Inc., 1991.

61. E. S. Fraga and K. I. M. McKinnon. CHiPS: A process synthesis package. *Trans IChemE*, 72:389–394, May 1994.

62. E. M. B. Smith and C. C. Pantelides. Design of reaction/separation networks using detailed models. *Computers chem. Engng.*, 19(Suppl.):S83–S88, 1995.

63. J. W. Ponton and J. Klemeš. Alternatives to neural networks for inferential measurement. *Computers chem. Engng.*, 17(10):991–1000, 1993.

64. J. W. Ponton. The use of multivariable rational functions for nonlinear data representation and classification. *Computers chem. Engng.*, 17(10):1047–1052, 1993.

65. H. M. S. Lababidi, B. Thompson, and N. Skilling. The PPDS FORTRAN interface. Technical Report TR-1991-11, Department of Chemical Engineering, University of Edinbrugh, Edinburgh, EH9 3JL, 1991.

66. W. H. Press, S. A. Teukolsky, W. T. Vettering, and B. P. Flannery. *Numerical Recipes in* FORTRAN. Cambridge University Press, 2nd edition, 1992.

67. P. E. Gill and W. Murray. Algorithms for the solution of the nonlinear least-squares problem. *SIAM J. Numer. Anal.*, 15:970–992, 1978.

68. E. M. Rosen and A. C. Pauls. Computer aided chemical process design: the flowtran system. *Computers chem. Engng.*, 1:11–21, 1977.

69. N. Skilling. ESSPROS programming system. University of Edinburgh, May 1991.

70. R. Motard and A. W. Westerberg. Personal communication, 1995.

71. C. J. King. *Separation processes.* McGraw-Hill Publishing Company Limited, 2nd. edition, 1980.

72. A. J. V. Underwood. Fractional distillation of multicomponent mixtures. *Chem. Eng. Prog.*, 44(8):603–614, August 1948.

73. R. N. S. Rathore, K. A. Vanwormer, and G. J. Powers. Synthesis of distillation systems with energy integration. *AIChE Journal*, 20(5):940–950, September 1974.

74. Z. T. Fidkowski, M. F. Malone, and M. F. Doherty. Computing azeotropes in multicomponent mixtures. *Computers chem. Engng.*, 17(12):1141–1155, 1993.

75. G. Schembecker and K. H. Simmrock. Azeopert - a heuristic system for the prediction of azeotrope formation. *Computers chem. Engng.*, 19(Suppl.):S253–S258, 1995.

76. J. Koehler, P. Aguirre, and E. Blass. Minimum reflux calculations for nonideal mixtures using the reversible distillation model. *Chemical Engineering Science*, 46(12):3007–3021, 1991.

77. P. Poellmann, S. Glanz, and E. Blass. Calculating minimum reflux of nonideal multicomponent distillation using eigenvalue theory. *Computers chem. Engng.*, 18(Suppl.):S49–S53, 1994.

78. H. E. Eduljee. Equations replace gilliland plot. *Hydrocarbon Processing*, pages 120–122, September 1975.

79. E. S. Fraga. CHiPS: A user's manual. Technical Report TR-1994-21, University of Edinburgh, 1995.

80. E. S. Fraga and T.R. Senos Matias. Synthesis and optimization of a nonideal distillation system using a parallel genetic algorithm. 1996.

81. E. S. Fraga. CHiPS: The unit model interface. Technical Report TR-1994-22, University of Edinburgh, 1995.

82. W. Kistiakowsky. *Zeitschrift für Physikalische Chemie*, 107:65, 1923.

83. E. S. Fraga. Personal communication, 1995.

84. T. R. S. Matias, E. S. Fraga, and J. W. Ponton. Nonideal distillation in automated synthesis. *Computers chem. Engng.*, 19(Suppl.):S57–S62, 1995.

Appendix B

Implementation of the Structural Evolution Method

The use of the structural evolution method in simulation starts by making a simpler flowsheet removing some of the operation units. Once the simplified flowsheet is converged the units initially removed are added one by one with the new flowsheet being converged at each stage. The procedure is repeated until the complete flowsheet is solved.

In this appendix a description is presented of the application of this method to the Cavett problem described in section 4.5.1.

B.1 Application to the Cavett Problem

The flowsheet diagram for the Cavett problem and corresponding block diagram are given in figure 4.3. As discussed in section 4.5.1 the recycle configuration used in this work was that where streams 4, 9 and 11 are used as recycle streams. These streams must therefore be given an initial estimate. Their value will be kept constant in the calculations until the flowsheet evolution reaches the point where they must be effectively converged, i.e. they appear in the flowsheet both as an

input and an output of different units. In the next flowsheet evolution step they will be converged once again, but now their initial estimate will be the converged values obtained in the previous flowsheet evolution.

For the Cavett problem the calculations start with one flash unit only and a flash unit is added in each flowsheet evolution until the complete structure is obtained. The procedure is described in the steps below.

Step 1

The initial simplified flowsheet for the Cavett process contains mixers M1 and M2 and flash IF1 from figure 4.3(b). Figure B.1 shows the simplified flowsheet for step 1. This step includes two recycle streams 4 and 9 which have been assigned initial estimates. In this flowsheet they are inputs only, so their value is kept constant throughout the calculation. Hence there is no convergence required in this first step. All streams are calculated through one pass only and the calculation proceeds to the second step.

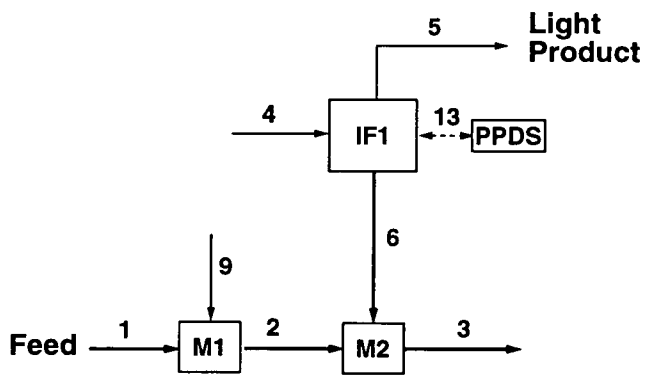

Figure B.1: First stage of structural evolution

Step 2

In this step flash unit IF2 is added as shown in figure B.2. This flowsheet can now be converged by calculating the correct flows of recycle stream 4 for this

arrangement. Once convergence has been achieved for this flowsheet the next evolution step can be performed with the new values obtained for all streams.

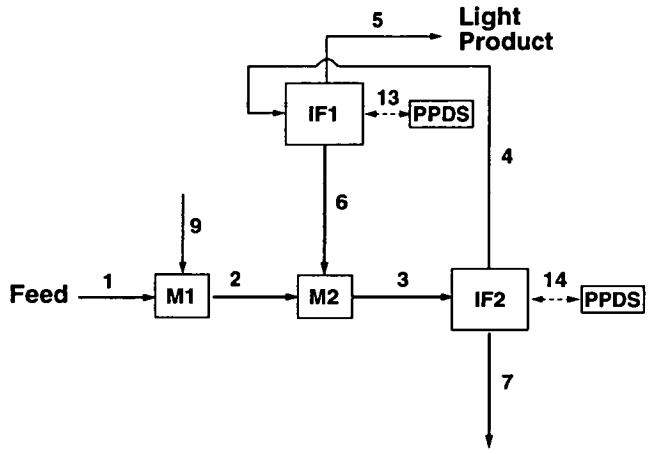

Figure B.2: Second stage of structural evolution

Step 3

In this step mixer M3 and flash unit IF3 are added as shown in figure B.3. The new flowsheet obtained is converged for both streams 4 and 9. In this case the starting estimate for recycle stream 4 will be that obtained from converging the flowsheet in step 2 whereas stream 9 will be converged starting from the initial estimate. In this flowsheet recycle stream 11 is simply an input to the process and its estimate will remain unchanged. Once this flowsheet has been converged the structural evolution process can proceed to step 4.

Step 4

In step 4 the remaining unit IF4 is added and the flowsheet is now complete. The full flowsheet is now converged for all three recycle streams. Convergence of stream 11 will start from its initial estimate, whereas convergence of streams 4 and 9 will start with the values calculated in step 3. Once overall convergence is achieved in this step the final flowsheet solution is obtained.

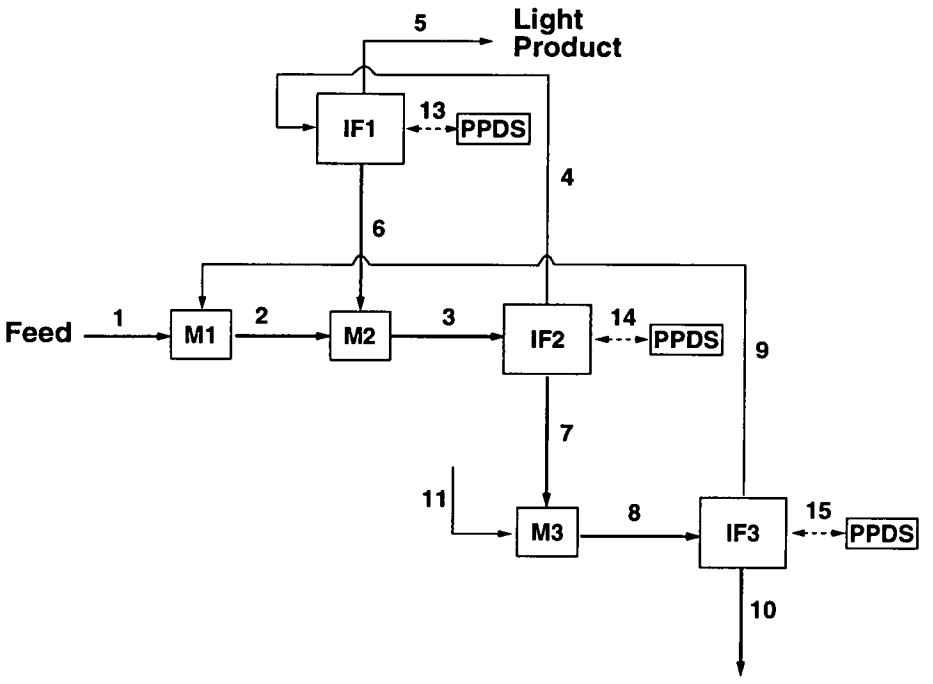

Figure B.3: Third stage of structural evolution

Nomenclature

Variables

$a =$ empirical constant, $[J]$

$a_i =$ parameters

$a_{jk} =$ local parameters coefficients for component j at iteration k

$A_i =$ parameters

$A_{ij} =$ interaction parameters between components i and j

$b_i =$ bottoms component flow, $[kmol/s]$

$B =$ total bottom flow, $[kmol/s]$

$B_i =$ parameters

$c =$ empirical constant, $[J]$

$C_i =$ parameters

$d_i =$ distillate component flow, $[kmol/s]$

$D =$ total distillate flow, $[kmol/s]$

$D_c =$ column diameter, $[m]$

$D_i =$ parameters

$D/F =$ overall recovery

$f_i =$ feed component flow, $[kmol/s]$

f_i^o = standard state fugacity of the pure liquid i, $[kPa]$

f_i^L = liquid fugacity of component i, $[kPa]$

f_i^V = vapour fugacity of component i, $[kPa]$

F = feed total flow, $[kmol/s]$

g^E = molar excess Gibbs energy, $[J/kmol]$

h_p = homotopy parameter

H = enthalpy, $[J/kmol]$

H_{bp} = Bubble point enthalpy

H_{dp} = Dew point enthalpy

$H_{d,b}$ = Average of bubble and dew point enthalpies

H_{av} = mean enthalpy, $[J/kmol]$

H_c = column height, $[m]$

$k^{(g)}$ = overall group equilibrium constant

k_i = equilibrium constant of component i

$k_{i,j}$ = equilibrium constant of component i in stage j

k_{kg} = equilibrium constant of each component k in group g

k_r = equilibrium constant of reference component r,

$k_{r,bp}$ = equilibrium constant of reference component r at bubble point conditions

L_k = liquid flow from stage k

m = number of stages

m_{min} = minimum number of stages

n = number of local calculations

$n_c =$ number of components

$P =$ system's operating pressure $[kPa]$

$P^{ref} =$ reference pressure $[kPa]$

$P_{bp} =$ bubble point pressure, $[kPa]$

$P_i =$ pressure of component i, $[kPa]$

$P_{vp,i} =$ vapour pressure for component i, $[kPa]$

$P_{vp,r} =$ vapour pressure of reference component r, $[kPa]$

$q =$ degree of vaporisation of the feed

$\mathbf{Q}_k =$ estimate of the Hessian matrix at iteration k

$r =$ linear convergence rate

$r_i =$ recovery of component i

$R =$ in chapter 2, universal gas constant, $[8.314 J/(kmol \cdot K)]$

$R =$ in chapter 5, reflux ratio

$R_{min} =$ minimum reflux ratio

$t^l =$ time used by the local calculation, $[s]$

$t^r =$ time used by the rigorous calculation, $[s]$

$T =$ system's temperature, $[K]$

$T_{bp} =$ Bubble point temperature

$T_{dp} =$ Dew point temperature

$T_{d,b} =$ Average of bubble and dew point temperatures

$T^r =$ temperature for the rigorous data, $[K]$

$V_i^L =$ molar liquid volume of component i, $[m^3]$

$V_i^{L*} =$ molar volume of pure liquid i, $[m^3]$

V/F = vapour split ratio, [−]

V_k = Vapour flow from stage k

x = vector of independent variables

x_i = liquid molar fraction of component i

$x_{i,b}$ = liquid composition of component i in the bottoms

$x_{i,d}$ = liquid composition of component i in the distillate

$x_{i,f}$ = liquid composition of component i at the feed

$x_{i,j}$ = liquid composition of component i in stage j

x_{kg} = mole fraction of each component k in group g

$x^{(g)}$ = overall group composition

x_r = liquid molar fraction of reference component r

y = rigorous property model

y_i = vapour molar fraction of component i

$\tilde{y}_i$ = artificial equilibrium vapour composition of component i

$y_{i,j}$ = vapour composition of component i in stage j

$y_{i,d}$ = vapour composition of component i in distillate

y_r = vapour molar fraction of reference component r

Z_i = parameters

Greek symbols

$\alpha_{i,j}$ = relative volatility of component i w.r.t. j

$\alpha_{i,r}$ = relative volatility of component i w.r.t. a reference component r

$\alpha_{ir,j}$ = relative volatility of component i w.r.t. a reference component r in stage j

δ_{k+1} = difference between the measured and the predicted error

ϵ_c = convergence error

ϵ_i = error at iteration step i

ϵ_{ij} = relative error for component j at the ith iteration step

ϵ_k = error at point k

ϵ^T = transposed vector of residuals

$\mathcal{F}_i$ = correction factor for component i

γ_i = activity coefficient of component i

$\gamma_{i,f}$ = liquid activity coefficient of component i in the feed

$\gamma_{i,l}$ = liquid activity coefficient of component i in the liquid output

Λ_{ij} = Wilson equation parameters

ν = measure of quality of the local model

η = tray efficiency

ϕ_i = fugacity coefficient of component i

ϕ_i^S = fugacity coefficient of component i calculated under saturation conditions

ψ = parameter of the Underwood equation

ξ = dimensionless time for the evaporation process or the dimensionless height of a packed column