1976.

DEPARTMENT OF INDUSTRY

THE DEVELOPMENT OF WAVE POWER

A Techno-Economic Study

ECONOMIC ASSESSMENT UNIT
NATIONAL ENGINEERING LABORATORY
EAST KILBRIDE GLASGOW
SCOTLAND

Price £5 From NEL

EAU M25

DEPARTMENT OF INDUSTRY

NATIONAL ENGINEERING LABORATORY

THE DEVELOPMENT OF WAVE POWER - A TECHNO-ECONOMIC STUDY

J M Leishman, Economic Assessment Unit

and

G Scobie, Fluid Mechanics Division

PREFACE

A study of the development of wave power was undertaken by the National Engineering Laboratory for the Department of Energy and was presented in a two-part report (Summary and Full Report) dated February 1975.

Because of the interest generated in the development of wave power it was decided to make the NEL contribution generally available in this report which presents in one document the bulk of the material in the two-part report.

The text has not been revised to take account of developments which have taken place since February 1975 and it should be emphasised that this report represents the status and NEL's thinking on wave power at that time. Some footnotes have been added to indicate where new information is in conflict with that in the report. No attempt has been made to take account of all new information in this way.

First published 1976

CONTENTS

SUMMARY

1 THE SURVEY

In February 1974 NEL was formally asked by the Energy Technology Division of the Department of Energy to undertake a study of the economic and technical feasibility of large-scale generation of electricity in the UK from sea/ocean waves. A preliminary study by the Division had concluded that the large-scale exploitation of wave power appeared to be technically feasible but that the cost of electricity produced would probably be around twice the cost of power generated by nuclear means. The NEL survey was commissioned to take a second and broader look at wave-powered generation in order to test the conclusions of the preliminary study.

The study, carried out by NEL's Economic Assessment Unit and Fluid Mechanics Division, obtained information from published sources and from visiting and contacting organisations and individuals concerned with wave-powered concepts, wave data and offshore operations. Details of work being undertaken abroad was obtained by UK Scientific Counsellors stationed in British Embassies in the USA, Europe and Japan.

During the course of the study considerable developments took place such as the award of the University of Edinburgh contract and the investigations undertaken by the CEGB and other organisations. The interest and the effort being expended by others must necessarily mean that the current situation in regard to wave power is a dynamic rather than a static one. Consequently, this study, although it has been able to produce a reasonably complete assessment regarding the state-of-the-art existing at one point in time, should be considered in the light of other work on the subject which has been undertaken since its inception.

2 THE NEED FOR WAVE POWER

In considering the development of wave power in the UK some of the possible reasons for making provision for an alternative and preferably inexhaustible source of energy were explored. We see the main factors in favour of alternative and preferably renewable sources (wind, solar, tidal, wave) as:

a Indigenous nature of renewable sources.

b Systems could be modular and decentralised and therefore less vulnerable to damage. Damage itself would not have secondary consequences.

c Systems are likely to be much less complex than nuclear systems and less demanding in the level of design, operation and maintenance skills required.

d Because of the possible limits to thermal pollution or on other grounds it may be desirable to determine that a certain percentage of a country's energy should be produced from renewable sources.

Having considered the alternative sources of energy available in the UK, we agree that wave power appears to be more attractive than wind or tidal power. In particular, wave power would appear to have the attraction of not requiring the very large single investments which tidal power would require.

3 WAVE DATA - THE ENERGY AVAILABLE

A vital part of this exercise was to confirm that the levels of energy in the sea waves around the coast of the UK are of sufficient magnitude to make wave power a genuine contender as an alternative source of power.

The energy in a train of sea waves can be calculated by considering the potential energy existing in the wave surface due to its deviation from a datum level. The power available can then be calculated by considering that this energy crosses a boundary at the wave velocity.

Based on this approach and using wave data obtained from the National Institute of Oceanography and from the National Physical Laboratory, mean annual power levels were calculated for various locations off the UK coast. The level of the power available is very sensitive to location. Off Lands End, for example, the mean power output was calculated to be around 27 kW/m whereas in the Atlantic off the Hebrides power levels can reach 70 kW/m.

A simple relationship between 50-year design waves and energy levels was deduced enabling maps of annual energy available to be built up. It was estimated that the wave energy on a 1700-mile contour 10 miles from the shore around Great Britain is around 500 million megawatt hours (equivalent to a mean power level of 21 kW/m). This is more than twice the combined annual energy output of the Electricity Boards in the UK*.

Should wave power become a serious proposition there may have to be a reconsideration of navigational clearways; if allowance were made for existing recommended clearways it is estimated that the 1700 miles available would be reduced to 500-1000 miles depending on distance from the shore.

One of the attractive features of wave energy is that it is at a maximum in the winter when consumption is also at its highest. There is however a greater variation in wave energy available than energy demanded with the result that there would either be a shortfall of energy in the summer or a theoretical excess (over the maximum installed rating) in the winter.

No wave-power scheme can be conceived that would remove all of the energy in sea waves, nor would this be desirable, and it is therefore necessary to calculate what could be reasonably captured in practice. Assuming that a wave-power scheme were to occupy 50 per cent of the length of any contour and was then to be capable of converting 50 per cent of the wave energy to usable power gives an overall efficiency of 25 per cent. Using this figure of 25 per cent, half the total British requirements for electricity* could be met by the wave energy in a stretch of ocean between 600 and 1400 miles long. The shorter length corresponds to all generation being undertaken at the best sites.

The best sites (Fig. 12) correspond to a line at variable distance from the shore and comprise 450 miles running parallel to the Outer Hebrides then turning east towards Orkney and north to Shetland, 45 miles of a line between Fraserburgh and Wick, 130 miles of the English Channel from Lizard Point to Portland Bill and 60 miles on a line approximately north-west of a point 10 miles west of the Isles of Scilly.

4 WAVE ENERGY WORLD WIDE

The levels of wave energy in the North Sea and off the south of England are roughly the same as the levels of energy off the USA, Canada, Japan

---

*At 1974 levels.

and Australia. The Atlantic approaches of the British Isles, excluding south-west England, have however much higher wave energy levels and more constancy of wave direction than any other sea area in the world adjacent to areas of high energy consumption.

5 ENVIRONMENTAL ASSESSMENT

It is very difficult to assess at this stage the environmental effects of wave-power stations but it is clear that putting wave-power generating stations into UK waters in any significant numbers is likely to cause difficulties to existing fishing operations. There may however be benefits to be gained from the existence of floating structures which do, in themselves, tend to attract fish or which could be intentionally used for mariculture techniques. Floating structures could also be used to limit the access of vessels to certain areas and thus prevent overfishing particularly by foreign vessels.

The effect on the coastline of removing wave energy also cannot be easily assessed. There can be little doubt that removing all of the wave energy on a continuous line not far from shore would have a significant effect on coastal erosion, deposition and sea-water turbidity. To determine the magnitude of these effects and whether they would be beneficial or harmful would require specific studies of particular generating schemes at particular locations. It is unlikely however that any practical wave-power scheme would extract more than half of the total incoming wave energy.

Certain designs of wave-power generator may not be unsightly. In general, generating stations would most likely be sufficiently far off shore or of low enough profile not to have an adverse effect on visual amenity. Certain designs of stations could also provide positive recreational benefits such as fishing platforms.

6 ENGINEERING SCHEMES

Wave power is innovatory as far as serious investigation is concerned but is not a new concept. It is estimated that over 340 British patents were granted between 1856 and 1973 for devices which were claimed to be able to utilise sea wave energy.

A schematic diagram was devised to classify the various principles of operation embodied in past and current proposals and 38 system types were accommodated. A review of wave-powered generators built and tested to date was undertaken. Schemes can be classified according to how they appear to extract wave energy. The energy in water waves can be thought of in terms of:

a Variations in surface profile of travelling deep-water waves.

b Sub-surface pressure variations.

c Sub-surface fluid particle motion.

d Unidirection motion of fluid particles in a shallow-water wave.

Schemes in category (a) include the many proposals for floats utilising a drive operated by a mechanical link between the float and a sea bed or shore-based connection or even a larger floating structure. Other proposals utilise the relative motion of a column of fluid within the float structure and this has been utilised both directly and by employing the secondary movement of air. A further option is to generate electricity directly from the oscillatory linear motion of an armature within an annular stator.

The fluctuation in pressure below the water surface can also be utilised in a number of ways. Oscillation of a water column inside a vertical tube could drive a rotor on a vertical shaft. Using the water column to displace air and drive an air turbine was demonstrated as early as 1910 and is now the basis of a commercial unit. Also relying on sub-surface pressure variations is a concept being investigated by Kayser in Germany.

The easiest way to utilise the sub-surface motion of fluid particles is to hinge a simple vertical flap about its lower edge and then to tap its oscillatory motion. The low efficiencies inherent in this simple concept have been overcome by Salter who has demonstrated that efficiencies above 90 per cent can be achieved with an asymmetric vane.

A combination of sloping ramps and converging wave channels has been used with shoaling waves; this has been shown in the past to be technically feasible but not economically viable. Re-appraisal of this type of scheme now suggests the possibility of economic viability at specific locations*.

7 CURRENT WAVE-POWER INVESTIGATIONS

Contrary to first impressions we found considerable and increasing activity in the UK and in other countries on wave power. Assessment and experimental work is being undertaken in the USA, France, Germany, Sweden, Finland and Japan. A list of all the organisations concerned with wave power is given in Appendix III.

8 SELECTION OF WAVE-POWERED GENERATORS

The attributes of a generator, in the absence of actual experience of operating such machines, have to be chosen on the basis of informed opinion. In selecting schemes worthy of further study the test criteria applied were:

i Number of intermediate stages between wave energy and electrical output.

ii Primary efficiency, wave/mechanical.

iii Linkage complexity.

iv Degree of stress concentration in principal components.

v Extent of exposure of components to sea water.

vi Manufacturing complexity.

vii Difficulty of transportation between manufacturing site and operating site.

viii Complexity of maintenance and repair.

ix Extent of hazard presented to navigation and fishing.

x Likelihood of damage to system if required to produce power in severe sea conditions.

xi Sensitivity of output to wave height.

---

*Bott, A. N. Power plus protein from the sea. Paper given to Royal Society of Arts, 11 March 1975.

xii Sensitivity of output to wave length.

xiii Difficulty of achieving tidal compensation.

xiv Possibility of extracting energy from more than one direction simultaneously.

xv Possibility of realigning structure to suit principal wave direction.

xvi Likelihood of adverse criticism on credibility and aesthetic considerations.

xvii Extent of R & D effort required to produce a prototype.

Applying these criteria, three promising schemes, the 'front-runners', were selected as worthy of further assessment. These are the floating ring buoy concept described by Masuda(2), the oscillating vane device of Salter(3) and the diaphragm buoy of Kayser(4).

In the ring buoy, (Fig. 31), the oscillation of the water level in an open-bottomed chamber results in a displacement of air which is rectified by a flap valve arrangement and used to drive an air turbine. Salter's device (Fig. 41) employs an asymmetric vane which oscillates in response to the incoming wave train and could be used to provide high-pressure fluid to a hydraulic motor or turbine. Kayser's device (shown in Fig. 38 in a buoy embodiment) utilises sub-surface pressure variations to operate a piston eventually powering a hydraulic turbine.

9 THE MOST PROMISING SCHEME

We selected the floating ring buoy scheme of Masuda for further technical and economic assessment. At the time of selection this particular scheme appeared to satisfy all the criteria which we postulated and it also appeared to be of such construction that its cost could be readily estimated. Having undertaken the assessment it was found that this thesis was partly justified but that considerable uncertainties on the technical design still remained. Consequently, we still rate this scheme as one of the 'front-runners' but it would be pretentious to claim that it, and it alone, merits the title of 'most promising scheme'. Moreover, the costs estimated for the scheme are inevitably based on untested technical assumptions about its operation and therefore these costs should be viewed with this firmly in mind.

The particular merits which led us to select this system for further assessment were:

a No large external moving parts.

b High efficiency claimed for wave to air energy conversion from tests carried out on floating breakwaters and rigidly held chambers.

c The valved air turbine/a.c. generator system has already been demonstrated to be effective and reliable in small units operating in the marine environment over a number of years.

d Fabrication of floating ring buoys could be undertaken using existing shipbuilding and construction technology.

e Overall system has a higher credibility rating than most others and could well lend itself to multiple-use applications.

On the other hand, this system shares the same areas of uncertainty as other wave-power generators namely:

a Motion of the structure in real sea conditions.

b Forces exerted by wind, current and waves on the structure.

c Structural design and mooring requirements.

d Arrangements for collecting power from a number of stations and transmission back to shore.

Uncertainties peculiar to this particular scheme are likely to be:

a Air displacement pattern within each chamber in real sea conditions.

b Optimisation of valve/air turbine/generator parameters.

c Harnessing the output from a large number of generators or integrating a large number of air flows to an air turbine.

10 COST OF WAVE-POWER GENERATION

With no provision for back-up it is estimated that the floating ring buoy concept, including transmission to shore, could cost from £700-1400/kW (equivalent to unity load factor) or more meaningfully could produce electricity at about 1p/kW h annuitised at 10 per cent. No undue emphasis should be placed on these cost estimates as the assessment did not and could not determine the costs of structures and components whose detailed design requires extensive investigation.

Cost estimates for wave-power generation made by other studies and investigations in the past were converted to today's prices giving capital costs at various or unknown load factors in the range £175-350/kW. Calculating capital costs at unity load factor, where possible, gives a range of £300-600/kW.

The estimates produced by this study and others indicate that wave-generated electricity is likely to be more expensive than nuclear-generated electricity but possibly by no more than a factor of 3, not by an order of magnitude. Without further design and development work it is not possible to be more precise than this. In suggesting the need for further development it must be emphasised that one function of R & D is to provide the information required to take major capital investment decisions. Further work to determine the economics of wave power could decide in which of three categories wave-powered generation lay:

a Capital cost less than nuclear plant and therefore justified on economic grounds alone.

b Capital costs higher than nuclear power but the additional cost balanced by benefits based on strategic considerations or multiple use of offshore platforms.

c Capital costs so much higher than nuclear that the additional cost far outweighs any conceivable summation of benefits.

11 MANUFACTURE OF WAVE-POWER STATIONS

In examining the potential of wave power to satisfy the demands of an alternative power source it is considered that large-scale production of energy from sea waves is technically feasible and could be achieved by the development of existing technology.

The construction of wave-power stations would be able to utilise the manufacturing technology and facilities which continue to be developed for exploration and production of oil in UK waters. Production of wave-power stations would however compete for resources if it were to be undertaken on any significant scale before the demand for oil platforms and equipment slows down. If on the other hand the two programmes were inter-phased there is a possibility of prolonging the life of offshore engineering activities in the UK.

There is a current trend for industry (power generation, chemical and mineral processing) and other activities to be moving into the offshore environment. Wave-power generation must be viewed in this context and opportunities will arise to make multiple use of floating platforms thus radically improving the credibility and economics of wave-power generation.

12 THE DEVELOPMENT OF WAVE POWER IN THE UK - RECOMMENDATIONS

In the full report we discuss in detail the various options for the further development of wave power in terms of low, medium and high profile responses.

Our main recommendations are:

a The UK should maintain an interest in the development of power generation from sea-wave energy.

b Liaison should be established and maintained between all centres in the UK and elsewhere which are concerned with the development and applications of wave power.

c The research programme on wave power at Edinburgh University should receive continuing support within the terms already laid down.

d Consideration should be given to a programme of work complementary to the Edinburgh programme to investigate means of converting oscillating mechanical motion into a usable form of energy.

e Consideration should also be given to design/development studies of a system or systems other than that being developed at Edinburgh University. Systems based on the displacement of air to drive an air turbine are considered to be the most promising alternatives.

f All competing wave-power schemes in the UK and abroad should be assessed against each other as further information becomes available. Wave-power schemes should be continually assessed against other alternative sources such as wind and tidal schemes.

g The effect on specific sections of the coastline of installing particular configurations of wave absorbing devices should be studied by experts competent in that field.

FULL REPORT

1 THE SURVEY

1.1 Background

This survey of the economic and technical feasibility of generating power in the UK from sea/ocean waves was commissioned by the Energy Technology (ENT) Division of the Department of Energy, following a preliminary study undertaken by the Division. The preliminary study had concluded that large-scale exploitation of wave power appeared to be technically feasible but the cost of electricity produced would probably be around twice the cost of power generated by nuclear means. The NEL survey was commissioned to take a second and broader look at wave-powered generation in order to test the conclusions reached by the ENT study.

Other forms of renewable energy such as wind, sun, tides and geothermal, had been considered by ENT Division, but it had been concluded that although these sources had their uses in special circumstances wave power appeared to be the most promising source of recurring energy in the UK.

1.2 Terms of Reference

After discussion between NEL and ENT Division formal approval was given in February 1974 to proceed with a survey having the following objective:

> "The study will seek to assess the economic and technical viability of wave power generation in the UK and will effectively attempt to provide confirmation or otherwise of the findings of the preliminary survey by ENT Division. Any particular scheme which may be selected in the course of the study as the most promising will not be examined technically in any more detail than is needed to establish its operational feasibility and to provide a reasonable estimate of its operating and capital cost."

The specific sub-objectives adopted by the survey were:

a To examine the potential for wave power generation around the coast of the United Kingdom. The suitability and extent of coastal sites will be estimated in terms of wave magnitude, variation with time, incidence of extreme conditions, depth of sea etc. The possible constraints on wave power generation imposed by shipping, fishing, amenity and marine ecology will be identified where possible.

b To review the state-of-the-art of wave power generation to establish the status of historical and current developments in the UK and elsewhere. From this review, which will not attempt to be exhaustive, the most promising wave power generation systems will be identified. An economic and technical assessment will then be undertaken to select which, if any, merits a more detailed study.

c Subject to the proviso in (b) above, to conduct a detailed economic and technical assessment of the most promising scheme. It is possible, but not certain that this scheme will be the float system already appraised by ENT Division.

Assuming for illustration purposes that this scheme were selected, the study would attempt to assess the operating feasibility of the system and its components. The engineering requirements for the components, the pumps, turbines, transmission units, floats etc would be specified and any need for research and development work indicated. The likely capital and operating costs of a typical wave power station would be estimated taking into account such considerations as the extreme environmental conditions and their effect on maintenance expenditure. The implications of the manufacture and operation of wave power generators on any significant scale would be estimated.

2 WAVE DATA - THE ENERGY AVAILABLE

2.1 Introduction

As a prelude to the economic and technical feasibility study of a wave generated power source of sufficient magnitude to be a useful addition to the existing public supply network, some background data on waves has been considered.

The data available$^{(1-12)}$ is limited to those areas and applications considered most relevant at the time of measurement. Therefore the two principal sources are the National Physical Laboratory, which has been responsible for observations in the northern fishing grounds and the North Atlantic (applications for trawler design) and the National Institute of Oceanography whose records relate to observations and measurements from lightships and more recently sites in the North Sea (offshore rig applications).

2.2 Waves

The model given below is based on that due to Longuet Higgins$^{(13)}$ and similar to a model in one dimension considered by Rice$^{(14)}$.

Consider properties of the surface which are common to a family of surfaces consisting of a sum of sinusoids with various relative phases and amplitudes. In this family the phases are distributed 'at random' and such that, when averages are taken with respect to the phase distribution, they are the same as the averages with respect to x, y and t. The surface may be written as

$$\zeta(x,y,t) = \sum_{n=1}^{\infty} a_n \cos (xk_n \cos \theta_n + yk_n \sin \theta_n - \sigma_n t + \epsilon_n). \qquad (1)$$

The horizontal and vertical axes being designated x and y respectively, time t, k is wave number magnitude and θ the angle of propagation referred to an appropriate reference which may be identified as the local mean direction of propagation.

For deep water every $\sigma_n^2 = gk_n$, and k_n and θ_n are densely distributed over $(0 < k_n < \infty, 0 \leqslant \theta_n \leqslant 2\pi)$ and in every interval $(k, k + \delta k)$, $(\theta, \theta + \delta\theta)$.

$$\sum_{k}^{k+\delta k} \sum_{\theta}^{\theta+\delta\theta} \tfrac{1}{2} a_n^2 = E(k,\theta)\delta k, \delta\theta, \qquad (2)$$

$E(k,\theta)$ being a finite spectral energy function known as 'the directional energy spectrum' of the wave system. The phases ϵ_n are randomly distributed in $(\theta, 2\pi)$.

It is well known (15,16) that the mean wave energy per unit area of water surface, which in deep water is half kinetic and half potential, is given by the mean value of $\rho g \zeta^2$ over all x, y and t. On squaring the series (1) all the cross products average out to zero and each squared term contributes a mean value $\frac{1}{2}\rho g a_n^2$ to the total energy. Thus in comparison to (2) we see that $\rho g E(k,\theta)$ represents the mean energy per unit area contributed by the wave components (k,θ) per unit increment of k and θ,

ie $$\rho g(\text{mean square elevation})^2 = \text{total energy.}$$

In the organised motion of simple regular trains of waves in deep water, all the water particles move in approximately circular orbits in the vertical plane perpendicular to the long crest line of the waves. All particles take the same periodic time to complete one cycle of their motion but do not all reach the top of their orbits at the same time.

If it is true that each surface particle moves on a circular orbit of diameter H (ie height of trough to crest) in a periodic time T, the acceleration towards the centre is $2\pi^2 H/T^2$. When the particle is halfway up its orbit this acceleration is purely horizontal and combines with gravity to give a false vertical inclined to the true vertical by an angle whose tangent is $2\pi^2 H/gT^2$. If the wave is sufficiently low to have a sinusoidal form the tangent of the angle is $\pi H/L$.

Equating these two expressions gives the wave equations

$$L = \frac{gT^2}{2\pi} \tag{3}$$

since velocity of advance $$C = \frac{L}{T}$$

$$L = \frac{2\pi C^2}{g} \tag{4}$$

$$C = \frac{gT}{2\pi}. \tag{5}$$

2.3 Analysis of Measured Wave Data

The most generally used method of recording wave information is by the Shipborne Wave Recorder (17). Records are taken at three hourly intervals and provide the measured parameters:

a H_1 the sum of the distances of the highest crest and the lowest trough from the mean water level (irrespective of whether or not they are part of the same wave).

b H_2 the sum of the distances of the second highest crest and the second lowest trough from the mean water level.

c T_z the mean crossing period, ie the duration of the record divided by N_z the number of times the record trace crosses the mean water level in an upward direction during the record.

d T_c the mean crest period, ie the duration of the record divided by the number of times the water level is momentarily stationary, falling to either side.

A record of sea waves is complicated and in principle can only be described adequately by its spectrum or the equivalent. However for many practical purposes a simplified description has to be used consisting of a characteristic wave height and a characteristic wave period. From the measured parameters listed above the following parameters may be calculated.

e H_s the significant wave height. The original definition by Sverdrup and Munk(18) was 'the average height of the one-third highest waves'. Tucker(19) made this slightly more precise as follows:

If h_n is the difference in level between the nth crest in the record and its preceding trough and t_n is the interval between the zero crossings in an upward direction on either side of the nth crest, and N_c the average of the number of crests in the record, then H_s is the average of the highest $N_c/3$ values of h_n.

H_s may be derived from $H_1 = kH_s$ where k is a factor related to the number of zero crossings in the record. The numerical value of k for a record containing 100 waves is 1.6 and for 50 waves $k = 1.49$. These values of k are theoretical ones for a narrow band spectrum(20) and have been shown to be substantially correct for typical wide-band spectra of sea waves(19).

f H_{max} (3 hours) the most probable height of the highest wave which occurred in the recording interval(21).

g ε the spectral width parameter which gives a simple but useful measure of the width of the wave spectrum.

$$\varepsilon^2 = 1 - (T_c/T_z)^2 \quad \text{(Reference 22).}$$

2.4 Presentation of Wave Data

The ways in which the wave data can be usefully presented are shown in Figs 1-6.

Wave height exceedance diagram, Fig. 1, yields the percentage of time for which wave heights exceed any given value. This figure is prepared by adding the number of occurrences of waves in each height range irrespective of their period. These totals are then added, starting at the greatest height, to give the number of occasions when wave height exceeded a given value. The number of occasions exceeding the lowest value of the second highest range is the number of waves in that range plus the number in the highest range, and so on. After this successive summation the figures are expressed as percentages as shown in Fig. 1. This is then directly in the form of the percentage of the season during which waves exceeded any given height.

Wave period histogram, Fig. 2, yields the percentage occurrence of some particular period parameter lying between specified small intervals. As for the wave exceedance diagram this is most usefully expressed on a seasonal basis, but in this case percentage occurrence is to be preferred to percentage exceedance.

The scatter diagram, Fig. 3, relates the relative occurrence of waves within specified height intervals. The example given is for observations made in a complete year and uses the significant wave height and the zero crossing period with the number of occurrences expressed in parts per thousand. Superimposed are lines of equal numbers of occurrences and two lines showing the ratio wave height/wave length and are useful as a guide to wave steepness.

Persistence diagram, Fig. 4, shows the number of times during a year when a specific significant wave height or above is achieved and the number of occasions when this height value is exceeded continuously for any specified duration. From this diagram may be deduced the number and duration of the occasions in one year on which waves persisted at or above a given height. For example if the limit for a particular operation is governed by a significant wave height of 6 ft, it would not be possible to perform it for periods in excess of 10 hours on 32 occasions and for periods in excess of 24 hours on 18 occasions.

The spectral width parameter, Fig. 5, gives the percentages of spectral width parameter values which occur within specified small intervals; because its distribution has been found not to vary significantly from season to season it is expressed as a percentage occurrence over the whole year. One can think of the significance of this parameter as follows.

If the wave components cover a wide range of frequencies, the long waves will carry short waves on top of them and there will be many more crests than zero crossings, so that T_c will be much smaller than T_z and ε will be nearly unity. If on the other hand, there is a simple swell which contains only a narrow range of frequencies, each crest will be associated with a zero crossing, so that T_c will be approximately equal to T_z and ε will be nearly zero.

Using the measured values of ε, the values of other wave height parameters can be estimated from H_1 and H_2. For example(19) the root mean square wave-height is estimated as follows:

From H_1; $\quad H_{r.m.s.} = \frac{1}{2}H_1(2\theta)^{-\frac{1}{2}}(1 + 0.289\theta^{-1} - 0.247\theta^{-2})^{-1}$

From H_2; $\quad H_{r.m.s.} = \frac{1}{2}H_2(2\theta)^{-\frac{1}{2}}(1 - 0.211\theta^{-1} - 0.103\theta^{-2})^{-1}$

where $\theta = \log_e N_z$.

An estimate of the most probable value of the height of the highest wave likely to occur in one or more durations of time such as 10 or 50 years can be made from a graph plotted on probability paper, Fig. 6. Its derivation has been described in detail in Reference 23.

2.5 Visual Observations

Although in the majority of areas of sea there is no instrumentally measured wave data, there are millions of visual estimates logged in meteorological reports. It is not immediately obvious which wave height and period parameters are being assessed by the visual observer, but some studies(24) have suggested that visually observed height is close to the significant wave height. However a comparison of British visually observed data in the North Atlantic(25) with measurements from the Ocean Weather Ship Station India(26) suggests that visual observations are a little lower, perhaps about 20 per cent, than the measured significant heights for the most common conditions (see Hogben's contribution to the discussion of Reference 26), and that really high waves, for example $H_s > 10$ metres, which appear about 15 per cent of the time in measurements(26) are nearly non-existent in visual observations(25) at 0.02 per cent. The area over which visual observations were made is much larger than that over which the measurements were taken, but it is difficult to see why there should be a significant difference.

2.6 Estimated Wave Data

Draper(27) considered estimates based on wind data and instrumentally measured wave data to produce a coherent picture of the extreme conditions in British and adjacent waters. The wind information is applied to established forecasting techniques such as Darbyshire and Draper(28) (derived entirely from instrumental measurements) or Bretschneider(29). The wave heights derived from the Darbyshire system are the most probable value of the height of the highest wave in a ten minute record, which can be used to derive the significant wave height, and the most probable height of the highest wave in some longer period. The Bretschneider method yields the significant height directly. The period forecast by both methods is the significant period, T_s.

For estimates based on instrumentally measured wave data, the records of the highest wave to have occurred in a 3-hour interval, H_{max} (3 hours), are plotted as cumulative exceedance on probability paper (Fig. 6) and extrapolated to yield an estimate of the 50-year wave height appropriate to the 3-hour period.

Agreement between the two methods of prediction proved to be good and the results are expressed in the map (Fig. 7).

Abbreviations for measuring stations are explained in Table 1.

2.7 Energy Available

Total energy per unit area, as indicated previously = $\rho g H_{rms}^2$ where $H_{rms} = (\overline{y^2})^{\frac{1}{2}}$ the root mean square wave height and y the elevation or depression above or below mean sea level.

Therefore Power per unit length of wave crest $= \dfrac{\rho g H_{rms}^2}{2} \dfrac{L}{T}$

$$= \frac{\rho g H_{rms}^2}{2} \frac{gT^2}{2\pi} \frac{1}{T}$$

$$= \frac{\rho g^2 H_{rms}^2}{4\pi} T.$$

Tucker(19) gives for the wave spectrum $H_{rms} = H_s/4$.

Therefore $$\text{Power} = \frac{\rho g^2 H_s^2 T}{64\pi} \text{ per unit length of wave crest.} \qquad (6)$$

Equation (6) may be applied to the scatter diagram (Fig. 3) to provide the annual energy availability.

Taking ρ for sea water 1.99 slugs/ft^3 and $g = 32.2$ ft/s^2 equation (6) reduces to

$$\text{Power} = \frac{H_s^2 T}{53.66} \text{ hp/ft} = \frac{H_s^2 T}{21.933} \text{ kW/m.} \qquad (7)$$

The number of occurrences in Fig. 3 are expressed in thousandth parts of one year, so that one occurrence may be taken as 24 × 365/1000 = 8.76 hours, therefore from equation (7)

$$\text{Energy} = \frac{H_s^2\,T}{21.933} \times 8.76\ \frac{\text{kW h}}{\text{m}}$$

$$= \frac{H_s^2\,T}{2.504}\ \frac{\text{kW h}}{\text{m}} \text{ for each occurrence.} \qquad (8)$$

Table 2 lists the energy available, calculated using equation (8) for each occurrence on the scatter diagrams, from the various measuring stations. It also includes the mean power output and the 50-year design wave height taken from Fig. 7.

Plotting the total available energy at each measuring station against the 50-year design wave height yields the unique curve of Fig. 8. It has therefore been taken as a reasonable assumption that the curves of equal wave height in Fig. 7 may be transposed to curves of equal energy level by the unique relationship between the two quantities. The estimate of the availability of wave energy in different areas is presented in Fig. 9.

2.8 Comparison with Demand

Fig. 10 compares the energy available each month with the output of CEGB for the months of 1970. The effects of industrial action raised doubts about more recent data. The wave data used for this figure is based on over 9000 observations(10) during 1965-68 from oil rigs operating in the North Sea in blocks 21 (57-58^{o}N, 0-1^{o}E), 42-44, 47-49 (53-55^{o}N, 0-3^{o}E) and 53 (52-53^{o}N, 2-3^{o}E). This data was recorded only as wave heights without the corresponding wave periods, so that energy calculations have been made with an assumed wave period of 8 seconds (based on observations from MV Famita). Energy was calculated as the sum of the energy available at the individual wave heights (see equations (7) and (8)),

ie
$$\text{Energy}\left(\frac{\text{kW h}}{\text{m}}\right) = \sum_{H=0}^{H=H_{max}} \frac{H^2T}{21.933}\,\frac{Nm}{N_1}\,N_2$$

where T is assumed equal to 8 seconds,

Nm = 730 the number of hours each month,

N_1 = total number of observations per month, and

N_2 = number of observations at individual wave heights per month.

Distribution of wave heights during any particular month take the same form as Fig. 11 (or Fig. 1), the skew distribution being displaced towards the lower wave heights in summer.

2.9 Areas Suitable for Use

Fig. 9 shows clearly that the Western and particularly the North Western approaches to the British Isles have by far the highest energy available. However since increasing distance from shore suggests increasing transmission costs a brief consideration of the effect of distance on available sites and energy densities has been made.

Four lines, three at fixed distances from the shore, of 10, 20, 30 miles and one of variable distance between 10 and 30 miles have been considered.

Results are presented in Table 3. The energy and coastline available are given with and without the shipping clearways considered. The effect of coastal shipping is clear when 10- and 20-mile figures are compared since the latter lies outside most of the coastal routes.

It is obvious that the variable mileage presents the highest density of energy per unit distance thereby requiring the minimum length of sea. The 685 miles shown in Fig. 12 comprises 450 miles running parallel to the Outer Hebrides then turning east towards the Orkneys and north to the Shetlands, 45 miles of a line between Fraserburgh and Wick, 130 miles of the English Channel from Lizard Point to Portland Bill and 60 miles on a line approximately north-west of a point 10 miles west of the Scilly Isles.

It is impossible in such a brief exercise to optimise the distance on the basis of cable costs alone since as more cable is needed further out to sea there is also a reduction in the number of structures necessary to absorb the greater amount of energy available, although the cable rating would have to be higher.

2.10 Wave Energy World-wide

NPL's 'Ocean Wave Statistics'(25) were used to provide data to estimate the amount of wave energy available in UK waters as compared with other sea areas of the world. 'Ocean Wave Statistics' is a statistical survey of wave characteristics estimated visually from voluntary observing ships sailing along the shipping routes of the world and is based on almost two million sets of observations of sea conditions made between 1953 and 1961.

The amounts of energy available estimated from this data were found to be less, by up to 25 per cent, than those calculated from measured data (as described in Section 2.7) but the figures were considered to be sufficiently representative to allow comparisons to be made between various sea areas. The figures derived for annual wave energy (MW h/m) in the various sea areas around the world are shown in Fig. 13; the basis on which the data were analysed is dealt with more fully in Appendix I.

Wave energy levels were calculated for 12 sea areas, 10 of which were found to have annual wave energies of between 300 and 500 MW h/m. The lowest figure obtained, 275 MW h/m, was for the Mediterranean. The highest figure calculated was for Area 2, the eastern half of the North Atlantic to the west of Scotland and Ireland, for which a level of 535 MW h/m was calculated. Energy levels in the North Sea and off the south-west corner of England are in the 300-400 MW h/m range and therefore compare favourably with other parts of the world. If Area 2 with its very high energy density is included, the British Isles probably ranks as the most attractive geographical area in the world to exploit wave power generation, if its technical feasibility on a large scale can be demonstrated. This however does not imply that wave power generation could not be economically viable elsewhere. Countries such as Japan with little indigenous source of energy, and shipbuilding and marine engineering capability and a level of wave energy roughly the same as that around much of the UK coast have considerable incentives to step up their effort on wave power generation and exploit it if possible.

There are also other locations in the world where the local physical environment is considered to be particularly suited to wave power generating systems combined with other uses. Schemes designed for such specific locations will be significant both in their potential benefits to the locality involved and in demonstrating the technical difficulty and economics of wave power for its possible application on a much wider scale.

2.11 The Impact of Wave Power Generation in the Coastal Zone

Putting wave powered generators into the sea will have three main environmental effects which will to some extent be interactive. Firstly, wave powered generators would be installed to extract wave energy and would therefore affect to some extent the pattern of waves reaching the coast behind the generators. Secondly, wave power generators are themselves structures and would therefore present a physical intrusion into coastal waters which would have some effect on operations such as navigation and fishing normally carried out in such areas. Thirdly, the construction and servicing of offshore structures would have a major impact on the physical and human environment on the coastal strip and hinterland serving the offshore region. Problems arising under this category would be similar to those encountered in the development of offshore oil and therefore studies of its effect on the environment(30) and planning guidelines(31) would be particularly relevant.

Energy extraction

It is difficult to generalise about the effects of installing wave powered generation on the coastline and offshore marine environment for a number of reasons. Waves, depending on their wavelength, height and direction cause both deposition and erosion of coastlines(32). Waves also give rise to longshore currents which have a very important part to play in coastal formation either depositing material eroded elsewhere or carrying it to locations from which it cannot be recovered. Wave powered generators, depending on their design and their location, would modify the energy spectra and the direction of waves impinging on the shore. These modifications would to some extent alter the way in which the coastline would have changed had wave power generators not been installed. In other words, the coastline is continually changing in any case: what is important is to determine whether this change would be modified and whether the modified change would be acceptable. The magnitude of the modification will depend very much on the length, spacing and distance from shore of a wave powered generation installation. There can be little doubt, for example, that a continuous generator several hundred miles long close to shore would result in major modification of the coastline behind such an installation. On the other hand, discrete wave powered generators would require to be positioned at some multiple of their width apart and therefore would probably extract less than 20 per cent of the energy coming into shore. With these considerations it is not considered possible at this stage to reach any definite conclusions on the effect of wave powered generation on coastal formation. Only an assessment of a specific design at a specific location using information on existing coastal changes(33-34) will give meaningful results. Secondary effects would have to be studied as part of such an assessment. For example, it is possible that a reduction in wave energy might increase water clarity which in turn could increase photosynthesis of marine flora and fauna. The reduction in wave-induced currents might also affect flows of nutrients. Although such effects may occur to some degree it is highly probable that the extent to which they will occur will effectively be negligible.

Fishing operations

Fishing around the UK coast is diverse in terms of type of fish caught and size and type of fishing vessel (drifter, trawler etc) and here again it is difficult to conclude exactly what the effects on fishing operations would be without defining a specific arrangement of wave power generator in a specific location. Qualitative information on fishing operations off the west coast of the UK is given in the Underwater Handbook(35), an extremely useful publication, and in particular areas by the relevant Pilot(36). Quantitive information on hours spent fishing and fish caught in specific sectors of sea is available from the Ministry of Agriculture, Fisheries and Food and from various publications(37,38).

Having defined a specific scheme, statistical information and discussions among interested parties could be used to determine the likely economic disbenefit, if any, which might arise. It is by no means certain that all the effects would be negative. By apparently providing a reference point offshore structures may attract fish and thus facilitate fishing. This concept can also be carried further and the platforms themselves used in connection with open sea mariculture techniques(39). The duration of fishing operations might also be increased if a specific generating station were to significantly reduce the severity of sea conditions between the station and the shore. One other difficulty arises in respect of fishing and that is the likelihood that power cables or pipelines could be cut or trawled up by fishing boats. This already gives rise to problems in Scottish waters with submarine power cables at particular locations being trawled up fairly regularly. Experience with wave data recording buoys in British waters suggests that the life of a buoy is about two or three weeks before it is rendered inoperable as a result of fishing operations.

Navigation

The mooring of floating, wave powered generators will add to the hazards presented to the mariner but once again the location and design will be critical. The need to maintain shipping clearways has already been recognised in Section 2.9 of this report where the estimates of potential mileage for wave powered installations have been adjusted to allow for this need. The approach here has been to react to existing traffic; if wave power were however to look like becoming a reality it is more likely that a compromise would be agreed between vessel clearways and the siting of wave power stations. Floating stations would naturally have to be fitted with navigation lights and perhaps audible warning and means of ensuring a good radar reflection. Under current legislation the installation of wave powered generators less than 3 miles from shore would appear to be governed by Part II (Safety of Navigation) of the Coast Protection Acts 1949.

Conflicts of interest in the coastal zone

The numerous uses of the coastal zone and the conflicts which may arise in this region are well summarised by Flemming(40) in a matrix presentation. Wave power generation may well be an additional item to add to this conflict of interests. Flemming goes on to demonstrate the difficulties associated with coastal planning in all countries having a coastal zone, indicating some 52 specific activities in the coastal zone with which some 13 possible Government Departments might be concerned.

The conflict between the movement to major offshore developments and environmental objectives with a consequent need for comprehensive environmental impact reports has been indicated by Heckard and Woodford(41) who conclude that there is not a wealth of experience in the form of completed environmental studies to draw upon in this area but argue that after the imminent submission, review and questioning of studies on offshore nuclear generation stations and offshore deepwater ports proposed for locations off the USA, a better understanding of regulatory guideline requirements should emerge. This conclusion can be equally applied to wave power stations off the UK. Only after design studies which include environmental impact studies have been prepared and discussed among the appropriate Government Departments and interested parties will the real problems and solutions be identified and resolved.

3 WAVE-POWERED GENERATORS PAST AND PRESENT

3.1 Patents

Contrary to popular belief the concept of wave power is not a recent entrant to the energy scene but has been around for at least two hundred years. It is estimated that between 1856 and 1973 over 340 patents* for wave-powered generators were granted.

Examination of the numbers of UK patents on wave power from 1860 to the present day shows an approximate s-curve (see Fig. 14). Between 1860 and 1890 two or three patents were being granted each year rising to around six per year between 1900 and 1930. After 1930 there is a marked reduction in the number of patents granted, the rate settling down to around one per year between 1935 and 1970. The resurgence of interest in wave power in recent years can however be deduced from the curve which shows that the annual number of patents is now tending to increase again rather than decrease. The most recent surge in interest in wave power encouraged by the massive increase in fossil fuel costs is not yet reflected in the curve which only shows the position up to 1973. Even when the most recent patent applications go through it is unlikely that the rate of invention will approach the 1900-1930 rate. A list of the numbers of the UK patents from 1856-1973 is given in Appendix II.

3.2 Schematic Review

One approach to classifying wave-powered generators or WPGs, is to consider how wave energy manifests itself and then to divide the main types of WPG according to the fashion in which they appear to extract energy from waves. It must be pointed out that in certain cases there is some doubt as to the extent to which a WPG fits wholly into one category rather than another and these divisions should therefore be considered as useful descriptors rather than rigorous categories. With these reservations, energy in ocean waves can be obtained by WPGs from:

A variations in surface profile (slope, height) of travelling deep water waves,

B sub-surface pressure variations,

C sub-surface fluid particle motion,

D unidirectional motion of fluid particles in a breaking wave which may be naturally or artificially induced, or

E other effects (this category is included to stimulate thinking on other possible ways of obtaining energy from sea waves; all systems identified to date are included in categories A-D).

---

*From 1909 onwards wave-powered generators and tidal-powered devices are classified together. This is not unreasonable since some devices can operate either because of the short period level variations from waves or from long period tidal changes. If tidal generators are included (from 1909 only) the total number of patents from 1856-1973 equals 413. Removing those which are definitely known to depend purely on tidal action and making an estimate for the remainder reduces the total to 341.

The general classification system is presented as a tree diagram in Fig. 15 with category A being sub-divided into three main branches covering systems where variations in surface profile:

i cause motion of a float, buoy or ship,

ii are transmitted to a water level chamber without significant attenuation*, or

iii are converted into a standing waveform.

Following through the branches to sub-branches we can identify specific schemes and these are numbered (1)-(38) in Figs 16-18. Virtually every scheme in this classification system represents at least one idea which has been proposed and in some cases tested. Table 4 gives the classification figure number, illustration figure number and literature reference(s) for schemes (1)-(38).

Category A: Schemes depending on variations in surface profile (slope, height)

(1) Float/Sea-bed Connection

There is no doubt that the action of waves on a ship or buoy producing heaving, pitching and rolling motion is the most apparent manifestation of wave power to the observer and the number of systems based on these effects reflects this. The most obvious way of extracting energy from the sea is to use the relative movement between the sea bed and a float to operate some sort of mechanical drive coupled directly to an electric generator or indirectly to a pump which in turn supplies high-pressure fluid to drive a hydraulic motor or turbine. The motor can be installed either on the float, on the sea bed or in the structure fixed to the sea bed. More recently proposals have been studied for the generation of electrical power from the vertical motions of a float using a linear generator. This system with variations is described in many patents and now and again re-appears in the popular scientific press(42).

Two variations on this scheme are possible. In one the float is constrained within a platform structure secured to the sea bed(42-44) whereas others describe the float attached either to a sea-bed mooring(45) or an intermediate submerged mooring(46) by means of a cable. Others propose to use a connecting rod between the float and the sea bed(47,48). Fig. 19 illustrates this concept diagrammatically.

Romanosky(49) describes two float schemes, one built by Fusenot in 1920 and the other by Cattancao in 1931. Fusenot's is reported as producing only a feeble amount of power whereas Cattancao's at Monaco operated for 10 years but was eventually destroyed by the action of the sea.

Floats directly connected to a sea-bed mooring were assessed by Voysey and Elliott in a study in 1951 for the Ministry of Fuel and Power and by Goodwin of the Energy Technology Division of the Department of Trade and Industry in 1973. The 1951 study concluded that a floating tank scheme should be capable of producing small amounts of power at about 0.3 d/kW h but found it difficult to conceive of any large amounts of power being developed on account of the great number of units that would have to be spread over a large area. Goodwin updated the 1951 study and concluded that a system of floating tanks 900 miles long could in theory provide up to 30 000 MW capacity for the UK.

---

*These systems would now be classified under category B.

The cost per kW h was estimated to be higher than nuclear power but not more than by a factor of three. Detailed studies of the intermediate submerged mooring concept were made by the Chance Vought Corporation(46) for oceanographic data buoys which produced favourable results and concluded that hardware development was the logical next step. In this particular study the mooring connection was employed directly to rotate an a.c. generator.

(2) Float/Drag Plate Connection

In this system the connection from the mechanical drive, instead of being made to a large weight on the sea bed or a structure piled into the sea floor is connected to a device with a high resistance to movement through the water. In its simplest form this can be a flat plate suspended horizontally in the water(50). In a more sophisticated version(51) an umbrella-type device was proposed which would open out and resist movement only as the float was lifted by a wave.

(3) Float/Shore Connection

Arrangements which utilise purely vertical motion of a float linked to a structure which is secured to a cliff or beach structure are not common. Pinard and Sala(52) describe a concept in which a float with an attachment moves vertically to drive a spur gear. On further examination, however, it is evident that the float is contained within a vertical passage in a cliff which is in connection with the open sea. The system strictly speaking therefore should be classified under A(ii) or B.

(4) Float/Floating Structure

This system represents a particularly interesting concept patented by Brady(53) and is illustrated in Fig. 20. In this case an unbuoyant structure between 800 and 1000 ft long is fitted with a large number of floats which, as well as supporting the structure, move relative to it, to operate hydraulic pumps. The series of buoyant members is designed to extend longitudinally over two or more wave lengths with the aim of keeping the apparatus as a whole substantially level. Brady's patent is dated 1930 and in it he proposes that his structure should be self propelled, that it should be submersible and that it could be used as a floating chemical plant or should produce hydrogen by electrolysis! These ideas of the 1930s are quoted to put in perspective seemingly new ideas on hydrogen production and self-propelled energy farming machines.

(5) Float/Internal Linear Generator

This system does not rely on external connections to produce power. The device was patented(54) by the University College of North Wales and is said to relate to a generator for generating electricity from oscillating motion such as that of sea waves, vehicle suspensions, pedestrians or animals. The invention consists of an electric generator comprising a permanently magnetised annular stator with a longitudinal axis and an armature which can move up and down on the same axis. Vertical oscillation of the generator as a whole gives rise to linear oscillations of the armature largely as a result of the inertia of a mass attached to the armature carrier. The device employed in a buoy is shown in Fig. 21. This patent was taken up and developed by a UK firm. The prototype however produced less than 1 watt and the project has since been abandoned. Computer predictions supported by sea trials showed that the generation of even 1 watt (mean) at periodicities of the order of 5 seconds required a prohibitively large mass and unacceptable mechanical complications.

(6) Tail Tube Float/Internal Float

The previous device described depends on the vertical motion of a mass relative to the float or buoy. Instead of a discrete mechanical weight in a buoy a mass of water in a pipe extending from the buoy can be used. Oscillation of the buoy caused by wave action results in an oscillation of the water column within the buoy and this can then be converted into useful power. What appears to be a rather circuitous way of achieving this is proposed in a UK patent by the Institut for Schiffbau(55). In this scheme an internal float situated in the water column drives electric generators via a rack and pinion arrangement.

(7) Tail Tube Float/Air Turbine

By far the most successful idea, however, has been to use the motion of the column of water to displace air rectified by a valve arrangement to drive an air turbine as is shown in Figs 22 and 23. This concept invented by Yoshio Masuda is well described in a number of papers(56-58) and is produced for sale by the Ryokuseisha Corporation of Japan and covered by British patent(59). Over 300 of these units or WATGs have been in operation in Japanese waters for the last 10 years and in this country the principle of the WATG has been tested by the National Physical Laboratory for Trinity House. A unit has been in operation in Kish Bank off the Irish coast for the Commissioner of Irish Lights and has produced levels of power in excess of expectations. The diameter of the aluminium alloy turbine used in the WATG is approximately 20 cm and the nominal rating of the generator is 60 watts. In an investigation on the probable life expectancy of the unit it was concluded that the generator could have operated satisfactorily for an indefinite period and certainly for a 3-year term of duty. A theoretical analysis of the power generated by this device has recently been published by McCormick(60).

(8) Tail Tube Float/Water Turbine

A more direct approach has been adopted by the Scripps Institute of Oceanography(61-63) to the conversion of energy from a buoy with a tail tube. In this system illustrated in Fig. 24 there is no intermediate air displacement stage. During operation the flapper valve closes for approximately half of the wave cycle forcing the water in the pipe to follow the motion of the float. As the float changes its direction of motion the water continues upward on an inertial course, which carries it higher than the wave height. Subsequent cycles raise it successively higher until a pressure suitable for power generation is reached. Test runs have been carried out on a device with a 320 ft tail tube of 8 inches diameter. Evaluation of the system had not been completed (November 1973) but on the basis of results obtained at that point it was claimed(65) that a generator with a 300 ft long, 15 ft diameter pipe would yield an approximate output of 300 kW in 8 ft significant waves.

(9) Float/Immersed Rotor

If a suitably bladed impeller is suspended sufficiently far beneath a float so that it is free from the circular motion of the water particles near the surface, it can be made to rotate by the vertical oscillations imposed on it by the float (see Fig. 25). This system(66) has been investigated by Swedish engineers at the research laboratory of the Fagersta organisation since mid 1972. The two propellers have a pitch control mechanism which ensures that their directions of rotation are always the same. The transmission system involves water being pumped to a water turbine/generator set contained within the float. Experiments have been undertaken on a ½-metre diameter float and it is estimated that a float 5 metres in diameter and 2 metres high could produce 250 kW.

A similar concept has been developed and tested at the National Physical Laboratory and is the subject of a patent application through NRDC. In NPL's idea the pitch-controlled propellers are replaced by an impeller with no moving parts.

(10) Float/Suspended Pressure Transducer

If an object is submerged sufficiently deeply to be out of the pressure fluctuations which are found immediately below the wave surface and is then connected by a taut line mooring to a buoy on the surface, it will experience pressure fluctuations because of its variation in depth with respect to the mean sea level. A design utilising this effect was prepared for a proposal to the US Navy Bureau of Naval Weapons(67). It should be noted that this is not the same concept as system (27) below which utilises the sub-surface pressure variations which are experienced by a taut line buoy moored just below the wave surface.

The above 10 systems cover the main ways in which the vertical oscillations produced by wave action can be converted. The next category of systems (11)-(14) depend purely on the rolling oscillations which are produced as a result of wave action.

(11) Rolling Float/Pendulum

In this system the general principle adopted is the use of a suspended pendulum within the buoy, power being derived from the relative motion of the pendulum and buoy, see Fig. 26. A buoy of this type was suggested and researched by Yoshio Masuda of the Defence Agency Technical Research Laboratory which led to two Japanese companies spending 20 million Yen between 1963 and 1965 on buoy development(56). In operation the buoy produced an output of 2-3 watts but the buoy was forced to roll greatly and the sway of the navigation light was found to be unacceptable.

Rejection of this mechanism of operation led to the successful system described under (7). The generation of power from the rolling motion of a buoy was investigated some 20 years ago by Trinity House which concluded that it did not appear that practical power output levels would be sufficient for large electronic units and that the overall cost of power generated in this way would be too high to justify the use of the system except in cases of utmost need.

(12) Rolling Float/Fluid Displacement

The rolling motion of an internally divided tank fitted with an appropriate series of one-way valves can be used to elevate the fluid to a reservoir which can be used to supply a low-head turbine. This system featured in some early British patents. Not all the patents were aimed at the production of useful power; in one proposal(68) the object was simply to achieve the transfer of fluid.

(13) Rolling Float/Shore Connection

In a recent US patent by Casey(69) an elongated U-shaped pipeline is hinged to a shore-based structure and attached to it are pivoted buoyant floats which rock in response to the wave action; this concept is shown in Fig. 27. The floats operate on hydraulic pistons to provide a high-pressure fluid supply back to shore. Means are provided for sinking the floats so as to ride below the surface in storm conditions. In postulating that the floats will continue to operate when submerged the system could be considered to approach the concept of an oscillating vane. The shape of the float approaches that described in (31) but because of its symmetry the vane efficiency will be minimal compared with system (31).

(14) Rolling Float/Other Floats

Utilising the relative motion between two or more floats or ships has been described by a number of writers$^{(57,70)}$. A three-float system with an overall length of one wavelength was tested in 1947 by Masuda, Fig. 28. Over a short period it was able to generate an output of 200 watts but the tests were abandoned after the device had been overturned by a high wave. A British patent$^{(71)}$ describes a fluid power system which utilises the rolling motion between two ships to power a reel-in winch to maintain the tension in the cable strung between the two ships. A multiple float system has been proposed by Cockerell and tests on this system are being carried out by British Hovercraft Corporation for Wavepower Ltd*.

(15) Combined Motion Float/Self-winding Mechanism

Rather than depend purely on vertical oscillations or pure rocking motion of a float, some systems attempt to utilise motion in either a vertical or horizontal axis together with rotational movement. In learning of attempts to utilise wave power, one is apt to ask why a large self-winding watch mechanism is not used. This is exactly what the Hamilton Watch Company were reported$^{(72)}$ to have done some 10 years ago. A prototype model weighing 1 lb was developed which was activated by a series of eccentric weights arranged so that any motion would cause at least one weight to turn on a shaft.

(16) Combined Motion Float/Sea-bed Connection

Realising that a float on a wave surface follows an elliptical path and is also subject to side thrust, Jones$^{(73)}$ proposes a spherical float connected to a three-cylinder sea-bed mounted radial pump which utilises horizontal as well as vertical motion, see Fig. 29. Jones also notes that any rigid structure offers resistance to wave motion and tends to attenuate available power.

A wave-powered generator which 'by means of a system of levers and ratchet wheels advantage is taken of every motion of the water in sidewise and slantwise directions as well as in the vertical' was actually built and demonstrated$^{(74)}$ by the United States Wave Power Company in 1911! The unit was built onto Young's 'Million dollar' pier, Atlantic City, New Jersey and was claimed by the promoters to have an output of 125 hp (110 kW). The company claimed (in 1911) that commercial plant could be built for $17.50 per horsepower and proposed to build a commercial plant at Boston or New York. Whether the company failed to raise the necessary capital or underestimated the costs it is fairly clear that this venture got no further.

(17) Combined Motion Float/Shore Connection

A float joined to an arm which is pivoted at its other end is not simply moving vertically up and down but has a rotational motion also. Presumably because the movement at its leading edge is less than the movement at the trailing edge, it has been found on test to have an efficiency about twice

---

*Since this study was undertaken the results obtained have led to this scheme's inclusion in the front runners. (New Scientist 6 May 1976, p 309).

that achieved by a float in vertical motion. Detailed schemes having floats with arms pivoted to a shore structure have been proposed in several patents and papers(75-77). A typical arrangement is shown in Fig. 30. It is not clear whether the latter paper describes a design concept or a piece of equipment which was manufactured. However the unrealistic shortness of the wavelength of sea in a sketch of apparatus is usually a sure indication that the proposer is not familiar with the real appearance of ocean waves!

(18) Combined Motion Float/Floating Structure

Instead of being pivoted about an arm attached to a shore station, it is possible to conceive of a ship or floating structure with pivoted floating outriggers. The ship, unless it is small, will have a larger period of motion than the floats and will therefore be effectively immobile as far as the float movement is concerned. The movement of the float arm can be directly linked to a hydraulic piston which supplies high-pressure fluid to the floating structure and can be used to provide propulsion or power generation. This system, among others, is described in a patent application by Cockerell.

(19) Travelling Wave Chamber/Floating Structure

If a barrier is immersed in sea but not very deeply, most of the wave is transmitted rather than reflected. Wiegel(78) gives an expression which relates the transmission coefficient to the depth of immersion and the characteristics of the wave. Masuda, in investigating floating breakwaters, found that the wave height could be significantly attenuated if the breakwater was in the form of an inverted box and the wave motion inside the box was made to do work on air forced in and out of orifices drilled in the top of the box. Measurements made suggest that up to 70 per cent of the wave energy was converted in this way. Masuda now proposes(79) to utilise this mechanism in very large floating ring buoys as illustrated in Fig. 31. The displacement of air would be used to drive air turbines of the type invented by Masuda and now proven in their application on navigation buoys. Cost estimates have been made by the proposer who considers that a 3 MW station can be built for about £850,000 producing electricity with a total cost per unit (kW h) of about 0.9p.

(20) Travelling Wave Chamber/Sea-bed Connection

A floating buoy of the type described above depends on having a very long oscillation period compared with the natural wave period and must therefore be very large; for the Atlantic, for example, the buoy would need to be around 1000 ft in diameter. A technically feasible but more costly approach for smaller stations is to immobilise the air chamber by mounting it on a platform secured to the sea bed. This concept which is illustrated in Fig. 32 has been proposed for a 100 kW demonstration unit for the Ocean Expo 1975 in Okinawa. It is estimated that on this scale and with this construction the unit cost of electricity will be in the range 4-8p/kW h. Unlike the floating buoy, a fixed platform does not automatically compensate for changes in level. In other fixed schemes which have been designed and built wave action communicates to the air chamber via a pipe which is still immersed at low water level. In this case the water level in the internal chamber will not retain a similar profile to the incoming wave and is better classified under systems depending on sub-surface pressure variations.

(21) Standing Wave Basin/Elevated Reservoir

When a wave is reflected by a vertical barrier such as a cliff or breakwater the incoming and reflected waves interact to produce a standing wave. In this waveform, crests and troughs are found only in certain places half a wave length apart and they do not move along. At the wall and at the other antinodes the rise and fall is twice the height of the component waves. This effect has been proposed in one scheme in which flap valves fitted to the vertical breakwater would transfer water to a reservoir which could be maintained above the mean sea level. The water would then be drained back to sea via a water turbine driving an electric generator. Dhaille also considers the effect of standing waves elevating water to a reservoir in his study of converging wave channels(80). This concept is illustrated in Fig. 33.

(22) Standing Wave Chamber/Shore Station

Another approach to producing a standing waveform to be utilised by a shore station has been suggested by Jacobs(81). In this approach a converging channel is used to collect wave energy and then transfer this energy by causing the incoming waves to set up resonance within a circular enclosed water-filled port. This port is divided by a thin-walled cylinder extending from the roof dividing the chamber into an annular ring chamber and a central cylindrical chamber. The water level oscillates between the cylindrical and annular sections and was to be used to drive an air turbine. The general arrangement of this scheme is shown in Fig. 34. This proposal formed part of the Wave Power Project of A D Little Inc., Massachusetts and although it was admitted that the behaviour of the port would be a major hydrodynamic problem it was estimated in 1956 that a 50 MW prototype of this type of station could be built for $430 per kW assuming an overall efficiency of 50 per cent. The paper concluded that the important point was that estimates of the cost of the wave-powered prototype fell within the range of conventional power projects. Jacobs hoped that his paper would stimulate further studies. Sadly, A D Little can now not trace details of the 'Wave Power Project' nor are they aware of the whereabouts of Mr Jacobs.

(23) Standing Wave Chamber/Floating Station

In a recent US patent, William Fadden(82) takes up the standing wave idea and envisages it being used in a floating power station. The patent envisages an exponentially curved channel with the energy of the standing wave in the wave basin being absorbed by displacing air in a honeycomb of vertically disposed chambers, Fig. 35. A moveable wall at the rear of the station is to be used to 'create standing waves in the vertical chambers and to minimise energy deterioration due to reflection and infringement'. The energy extraction portion of the invention includes an air dehumidification section to produce fresh water. As well as being an interesting technical proposal this patent gives a short but useful review of other wave-power concepts and references for the design of standing wave systems.

Category B: Systems depending on sub-surface pressure variations

(24) Pipe Connected Air Chamber/Shore Station

As a wave passes over a fixed point below sea level it experiences a pressure fluctuation(67). The trochoidal theory of wave motion indicates that this total cyclic pressure change is

$$\Delta P = Hwe^{\left(-\frac{2\pi h}{\lambda}\right)},$$

where H = wave height (ft),

h = depth below mean sea level (ft),

λ = wave length (ft), and

w = specific weight of fluid (lb/ft^3).

This pressure fluctuation decreases exponentially with depth and can be utilised in a number of ways. If a tube is immersed in the water the water level within it will oscillate due to the change in pressure in the water at its bottom end. This principle is utilised in an adaption of the WATG system described under Scheme (7). A lighthouse on Ashika-Jima Island, Japan, has been powered by a system such as this since 1966[56] and is illustrated in Fig. 36. It is claimed from the operational experience gained that the fixed type WATG is cheaper to install than solar cells, fuel cells or batteries. Applications to observation towers, oil platforms etc are illustrated in the technical literature of the Ryokuseisha Corporation. It is not surprising that this system has been demonstrated to be technically feasible. As early as 1910 Bochaux-Praceique was using an almost identical system to light and power his house in Royan, near Bordeaux[83]. This unit which must mark as the earliest successful generation of a substantial quantity of electrical power (1 kW) was fitted with an ingenious air reaction turbine with two sets of leather-covered slots. Irrespective of whether pressure or suction was applied to the turbine disc the valve slots ensured that the reaction force was such that the turbine rotated in the same direction.

A large number of devices which involve periodic oscillations in pipes and chambers of different and varying cross-section are described in a patent[84] granted to Electricité de France. In each case, according to the patent, the aim is to tune the pipe or chamber so that amplified oscillations are achieved by virtue of resonant behaviour. In this respect the devices in this patent impinge on classifications (21)-(23). In one embodiment illustrated the amplified oscillations within a chamber are in fact used to elevate water to a low-head reservoir in the same way as (21) attempts to raise water at a vertical wall.

(25) Submerged Air Chamber/Sea-bed Connection

As has been mentioned earlier the periodic pressure fluctuations experienced at a fixed point below the surface decay exponentially with depth: it is certainly not valid to assume that there are pressure fluctuations at any depth equal in magnitude to the wave amplitude. This is erroneously the basis for the evaluation of one scheme shown in Fig. 37 which envisaged two vessels spaced half a wavelength apart and joined by a duct in which was situated an air turbine. At a depth of 30 ft in 10 ft high waves a pressure fluctuation of ±5 ft is assumed to occur whereas in reality the pressure change would, by the formula given above, give a pressure fluctuation of ±4 ft. Even at station 'India' waves of significant height 10 ft occur most often with a 9-second period and in this case the fluctuations would be reduced to ±3 ft. This scheme was selected at one time as the most promising of a number examined; a re-appraisal using the trochoidal theory to estimate the pressure fluctuation would be unlikely to come to the same conclusion.

(26) Immersed Pipe/Water Turbine

Reconsidering the concept of a tube partially immersed in the sea with an oscillating level within it, it is clear that instead of displacing air to drive an air turbine, the flow of water could be used to drive a water turbine. This is the concept proposed by Rhead(85) and a number of variations are described. The turbine is designed to accept oscillating flow but maintain its direction of rotation; the turbine tubes can be affixed to sea cliffs or floating pontoons of sufficient size to be substantially undisturbed by wave action. In one variation the turbine is designed to operate in a column of oil which is oscillated on a supporting column of water. Although it does not invalidate the concept if the immersion depths are not too great, the assumption is again wrongly made that the pressure fluctuation due to wave action continues unattenuated to any given depth.

(27) Diaphragm/Taut-line Buoy

The pressure fluctuations experienced at a fixed depth below the wave surface will act on a plane surface at this depth and this approach has been adopted in the design of taut-line moored buoys fitted with diaphragms. In this concept a buoy is kept in position below the wave surface by a taut-line mooring and the fluctuating wave pressure acts on a diaphragm operating on a hydraulic piston. The Research and Development Division of the AVCO Corporation built and tested a buoy of this type(67,86). The buoy could in theory produce 1 watt but on test in Buzzard's Bay, Massachussetts, no effective swell was experienced until a hurricane terminated the tests damaging the buoy and rupturing the diaphragm.

Kayser(87,88) envisages using the fluctuating forces acting on a large diameter piston in a submerged buoy to drive a much smaller pump piston and hence produce sufficient head to drive a Pelton wheel, Fig. 38. A prototype of this device 1 metre in diameter with an output of 500 watts (electrical) is now under construction. Inertia stabilisation of the buoy as distinct from taut-line mooring is also being considered.

(28) Diaphragm/Sea-bed Structure

Utilising the same concept as in the taut-line buoy Kayser also describes(87) a 1 MW wave-powered generator sitting on the sea bed in a small bay providing high-pressure water to a shore-based water turbine. A method of tidal compensation is described.

Also sited on the sea bed is the concept proposed recently by the Power Systems Company of Boston(89). The design shown in Fig. 39 consists of pliable rubber-like tubes filled with hydraulic fluid firmly secured in concrete troughs built along the sea bed near the coast. The pressure exerted on the fluid in the strips is transmitted to a hydraulic accumulator on the shore driving a fluid motor. It is claimed that small-scale tests have been successfully made which showed that 'almost all of the hydrostatic pressure is collected and converted into usable energy'.

Category C: Systems depending on sub-surface fluid particle motion

All the particles of water beneath a surface disturbed by ocean waves are in motion. As an approximation the particles can be said to move in circular orbits at a constant speed in one direction of rotation. The orbits must be completed once every period and the diameters of the orbit of particles at the surface must be equal to the wave height. The radius of the circular path decreases exponentially with depth. In intermediate depths, d, of water ($1/20 < d/\lambda < 1/2$) the orbits of the particles are ellipses whose major and minor axes both decrease exponentially with depth(90). In shallow water ($0 < d/\lambda < 1/20$) only the minor axis of the ellipse decreases with depth. These sub-surface motions due to wave action can be utilised in a number of ways.

(29) Wave Rectifier

In a concept which Shick calls a wave rectifier(91) a series of floats are fitted with hinged flaps. The wave rectifier flaps open fully to catch the force of the water particles as they travel forwards. In the trough of the wave the motion of the water particles closes the flap and the rectifier thus evades most of the opposing energy. Scale models have been tested and the applications considered range from towing fishing lines to propelling a string of barges.

(30) Oscillating Vane/Sea-bed Connection

Rather than rectify and utilise the oscillation of a flap to propel a craft its motion under wave influence can be used to drive a mechanism and provide useful power. In an assessment of an oscillating plate device consisting of a large paddle which rotates about a hinge built into a concrete foundation, Fig. 40, it was concluded that compared with other schemes studied this scheme was much simpler in construction and presented no serious design difficulties. It was also estimated that at that time (1954) the unit would be economically viable and that R & D costs would be minimal.

(31) Oscillating Vane/Floating Structure

One of the main disadvantages of many devices which attempt to convert wave energy is that the operation of the device creates further waves or reinforces the waves passing to the rear of the device. Even a simple flap of the kind described in (30) will by its action transmit waves behind it and therefore its efficiency will be reduced. Tests have shown that about 40 per cent of the energy is absorbed, 25 per cent is transmitted onwards and 20 per cent reflected to the source with a simple oscillating plate.

This difficulty has been tackled and resolved by the vane shape designed by Salter(92), see Fig. 41. When the vane moves there is no displacement of the water behind it and the changing displacements in front of it rise from zero at the bottom of the vane to amounts close to those in the approaching wave at the top. In model tests this type of vane has been found to convert up to 90 per cent of the wave energy and therefore must rank as the most efficient concept for converting wave motion to mechanical movement. In one ocean-going concept, Salter proposes to use the random oscillations of the vane to provide high-pressure water to power a hydraulic turbine by means of a specially designed pump. A common backbone for about 40 vanes is provided by a composite cylindrical member containing the hydraulic network. The ends of the cylindrical members are joined to vertical fins which house trim tanks, ballast and machinery. The structure is conceived of as being freely floating. A stable reference against which the waves could act, could be arranged by using a structure 0.5-1 km long. Since the crest lengths of waves would in general be only a fraction of the length of the structure, the structure itself would experience a number of crests and troughs simultaneously and therefore would not move up and down in the waves. The drawback to using very great lengths is that the structures would experience very large stresses resulting in an expensive construction. R & D on this system will attempt to define the minimum length of structure which will remain stable.

(32) Horizontal Rotor/Axis Normal to Wave Direction

The Savonius rotor(93), named after the inventor, was developed to rotate in one direction irrespective of the direction of the wind driving it. This rotor is formed by halving a vertical hollow cylinder and then fixing the two parts, displaced from each other, between two end pieces. This device will also operate in a current of water rather than air but will also rotate due to wave action. Although there is no nett motion in a wave such as there is in a river current it can be shown that the rotor operating in waves is subjected to a rotating flow pattern which causes motion. The inventor himself conducted limited trials in the Baltic Sea which showed that the rotor was kept in motion even when submerged to a depth of four to five times the wave height. This feature of systems operating on sub-surface particle motions or pressure fluctuations cannot be stressed too strongly: they will continue to operate at a reducing power level the deeper they are submerged, thus permitting continued operation in storm conditions, not at the level of power present in storm waves, but at their designed power output.

A larger version of the Savonius rotor system was subsequently installed at the Musée Oceanographique in Monaco and was used to drive pumps lifting water to a height of 200 ft to supply the Musée's aquariums.

(33) Horizontal Rotor/Axis Parallel to Wave Direction

The axis of rotation of the Savonius rotor is at right angles to the direction of travel of the driving wave. A rotor has been designed however which has, like the Savonius rotor, its axis horizontal but which is parallel to the direction of the wave travel. This rotor has been built and tested but initial results do not suggest that it represents a particularly efficient way of converting wave energy.

Category ~~C~~ D: Systems depending on unidirectional particle motion in breaking waves either naturally or artificially induced

In deep water, apart from a very small secondary effect, there is no nett movement of water in a wave. When the water depth is reduced, however, by a shoal or beach it is observed to break or spill, in which case the water particles themselves move continuously forward. The water transported up a beach in this fashion is of course returned to the sea in the swash before the next wave breaks. Obviously there is a very large amount of kinetic energy in breaking waves and a number of schemes have been proposed to capture this form of wave energy.

(34) Horizontal Air Chamber/Floating Structure

In deep water a wave can only break or spill due to the effect of an externally applied energy source such as the wind, which produces 'white horses'. If a suitably designed obstruction is put in the path of the waves in deep water they will break in the same way as occurs with the natural obstructions presented by sloping beaches. This principle has been adopted by Parrish(94) who describes a floating structure equipped with an appropriately designed breakwater. The deep water waves are caused to break over the barrier and the resulting rush of water forces its way into a horizontal chamber compressing the air within it which can then be used to drive an air turbine.

(35) Horizontal Air Chamber/Shore Structure

A similar concept was proposed by Parenty and Vandamme(95) for a shore-based station consisting of a large number of horizontally disposed chambers provided with water seals.

36

(37) Hydraulic Ram/Shore Structure

In this scheme(96) a funnel connected to a long horizontal pipe is situated in water just seaward of the breakers. The funnel constrains the water particles to go forward in the funnel gathering speed as they go. A waste valve in the shore-mounted end of the horizontal pipe is designed to close at a certain water velocity. On closing a water hammer is set up in the pipe raising the water to a reservoir. A feature of the system is that the water hammer or excess pressure produced on each occasion is the same; waves with a higher energy content simply produce more pressure excursions in each wave cycle. The proposer estimated that this type of unit could convert 60 per cent of the kinetic energy of the wave to a potential head for use in standard hydraulic machines.

(37) Converging Channel/Direct Water Turbine

The scheme proposed by Pinard and Sala(52) has certain similarities to the above. In this case, however, the funnel is cut out of an existing rock structure on the sea shore or is artificially constructed. A jet of water which is produced in the neck of the funnel is then channeled through a nozzle to drive an impulse turbine. In another shore-based scheme studied around 1950 incoming waves were to be translated into forward motion by an inclined ramp. The water was then to be converged by buttresses through an orifice to drive a turbine. Each turbine in turn was to drive a pump and provide a continuous flow of high-pressure water to a Pelton-wheel driving an electrical generator. An assessment of this scheme concluded that its capital costs compared with other schemes would be high and the efficiency of conversion of kinetic energy to electrical energy would be low.

(38) Converging Channel/Elevated Reservoir

A simple way of overcoming some of the drawbacks in the previous system is to use the converging channel and sloping ramp(61,80,97) to elevate water to a reservoir, see Fig. 42. The water in the elevated reservoir discharges back to sea level via a low-head turbine driving a generator. Compensation for changes in level due to tides can be achieved by using a ramp which has a fixed and a sliding part. Under certain conditions the waves in converging channels can demonstrate standing wave behaviour. This mode which also serves to elevate water to a reservoir is described in (21) above. In 1956 an assessment(80) of a converging wave channel power station concluded that it would be technically feasible but unprofitable in spite of the possible use of axial, bulb or well-type turbines. One way of overcoming the low hydraulic heads implicit in this type of scheme may be to utilise a hydraulic ram as described in (36) above.

3.3 Generators Built and Tested

Table 5 which is largely self-explanatory lists 27 wave-powered devices which are known to have been built and tested and gives details of power levels and comments on their performance. Examination of this table shows quite clearly that the most successful of these devices employ the air-turbine principle. The earliest scheme noted (1910) generated 1 kW using the same fixed-type air turbine scheme which is now finding application in Japan and elsewhere. In the system operated in 1910 the valves were incorporated into the turbine disc itself whereas the Japanese design separates the valving from the turbine. Float devices have operated successfully in Monaco (1931) and Japan (1947) but have invariably been eventually put out of action by being overturned or otherwise damaged. Rotors of the Savonius variety have been operated effectively (Monaco 1931) but no measure of their efficiency is available. Converging channel power stations have been shown to be technically feasible (Algeria 1944) but not economically viable at the time tested. Pendulum system buoys have been built and have produced power but their swaying motion was found unacceptable in navigation applications. Diaphragm devices have been operated and are likely to find application in defence fields where invisibility is important but they too can be damaged by extreme weather conditions. The most efficient conversion mechanism designed to date appears to be the vane developed by Salter (Edinburgh 1973). This device is still at the model stage, however, and further R & D is being undertaken which will enable its real potential to be determined.

3.4 The Current Scene

In considering the study of wave power at the end of 1973 it could have appeared on the surface that no work was being undertaken. Unlike solar power and wind power the possibility of generating power from ocean waves seemed to have attracted many critics but few proponents. However, in carrying out this study it became increasingly obvious that not only was research being undertaken in a number of centres but similar studies to assess the technical and economic feasibility of wave power were in progress or had been undertaken in a number of countries. A complete list of all the organisations in the world currently known to this survey to be concerned in the assessment, development or application of wave power generators at the present time (January 1975) is given in Appendix III.

3.5 Criteria for Generator Selection

The attributes of a generator, in the absence of actual experience of operating such machines, have to be chosen on the basis of informed opinion. The criteria therefore set out below are open to criticism and inevitably will be modified and added to in the light of future research, design studies and contributions from other parties. A number of the designs studied although effective in producing small amounts of power would not be capable of scaling up to produce power in quantities suitable for the electricity supply network. One of the implicit criteria which was adopted in assessing the suitability of particular generators was the ability to produce large amounts of power. In selecting schemes worthy of study the test criteria applied were as follows.

3.5.1 Number of intermediate stages between wave energy and electrical output

This number ranges from two to five in the systems considered. For example in the case of scheme (1), wave energy is converted by a <u>float</u> into:

i oscillating mechanical energy in a vertical axis converted by a <u>rope and pulley</u> to

ii rotational energy in an output shaft converted by <u>pump</u> to

iii fluid energy converted by hydraulic <u>turbine</u> to

iv rotational energy in output shaft converted by <u>generator</u> to an electrical output.

The energy can therefore be considered to exist in four intermediate forms with losses inherent in the conversion units, ie the float, pulley, pump, turbine and generator. It may be that a large number of intermediate stages are required to match the random nature of the wave energy to a smooth electrical output. On the other hand a large number of stages implies greater losses and a greater number of components which can give rise to failure and require maintenance.

3.5.2 Primary efficiency, wave/mechanical

Wave energy impinging on a vane or float can be reflected, absorbed and transmitted and to maximise absorption a WPG should be designed to minimise the other two losses. From experimental measurements it appears that a float bobbing up and down can be expected to have an efficiency of around 30 per cent and a maximum of 40 per cent if the dimensions of the float are optimised in terms of wave length and freeboard. The principal loss associated with this type of device appears to be transmission as occurs when a float is forced up and down in calm waters radiating waves in all directions. Hinging the float at or from one end will reduce the displacement at the rear edge and this measure can raise the primary efficiency to a maximum of 60 per cent.

A similar loss of efficiency occurs with a plate oscillating due to wave motion which can be reduced or eliminated by designing a vane which does not in turn generate or amplify the waves to its rear. In all the devices above, wave forces act directly on a vane or float and the resultant power available from the mechanical component as a fraction of the wave energy is taken as the primary efficiency. In the case of the floating ring concept it is known from tests that around 70 per cent of wave energy is absorbed by air movement but this then has to be converted to mechanical energy in an air turbine. Although this implies a lower primary efficiency than 70 per cent there are no further stages to be gone through other than the electrical generator and therefore overall efficiency can be expected to be high.

It is obvious that with this particular criteria as high a value as is theoretically possible should be sought as a high efficiency system would require a shorter length of coastline for a specific output and would have a lower capital cost.

3.5.3 Linkage complexity

This refers to the number and type of mechanical links in the system and should obviously be minimised. This factor would be high in the case for example of a float connected by links to a shore station.

3.5.4 Degree of stress concentration in principal components

This factor would obviously be high in a situation, for example, where all the mechanical energy in an oscillating float is taken by a rope connected between a pulley and an anchor weight. Such concentrations of stress should be avoided wherever possible.

3.5.5 Extent of exposure of components to sea water

Reliability of systems will be greatly reduced if moving parts in particular are subject to corrosion by sea water or fouling by marine flora and/or fauna.

3.5.6 Manufacturing complexity

This factor is a subjective rating of the total difficulty of manufacture of the structure and components and their assembly. It takes into account the need to develop special tooling or skills as opposed to the employment of existing manufacturing facilities and expertise.

3.5.7 Difficulty of transportation between manufacturing site and operating site

Only in a few cases is this likely to prove a major difficulty as has been the case with schemes requiring 300 ft of tail tube. Some floating stations will however have better towing characteristics than others and in addition to placing in its initial location this may be a significant factor if the station is subsequently moved from location to location or back to shore. Shore stations involving concrete constructions would obviously have to be built in situ.

3.5.8 Complexity of maintenance and repair

This factor which again should be as low as possible, is a composite assessment of the accessibility of wave power generators for maintenance and the ease with which major components could be replaced or repaired at the operating site. For example it will be much easier to access a large floating structure by helicopter than to board a tank bobbing up and down in 20 ft waves. Submerged units also pose additional difficulties in that they must either be brought to the surface (or raised above it) or be accessed by divers operating from a surface craft.

3.5.9 Extent of hazard presented to navigation and fishing

All devices put into the sea to extract energy from the waves will obviously present a hazard to navigation but this hazard will depend on the type of system. A large number of small floats will present a highly dispersed type of barrier with damage more likely to small craft which might attempt to navigate through the 'station'. There is also a high probability with a large number of floats that one or more will come adrift at any time. Conversely, a floating station which requires to be large in extent would have a high visibility and may even be able to provide a breakwater facility for vessels moving inshore of its location. The consequences of such a station coming adrift would of course be severe. The mooring of large offshore structures is however becoming an increasing reality with the development of offshore oil and the technology built up for the construction and operation of oil rigs and platforms would be directly usable for large wave powered stations.

Fishing operations are likely to be more adversely affected by a dispersed type of wave power station involving a great many separate units and mooring lines than they would be by a smaller number of larger units.

3.5.10 Likelihood of damage to system if required to produce power in severe sea conditions

Certain types of systems could be protected from severe sea conditions if they were to be submerged. For example, a float connected to a sea bed mooring could be 'wound down' to a sufficient depth to prevent damage, a semi-submersible with an oscillating vane could be submerged to such an extent to avoid the worst excesses of storm conditions. There is however an important distinction between these two systems. In the float system the source of power is lost once the float is completely submerged* and the system then ceases to operate at any level of power. Systems such as (27) and (31) which depend on sub-surface pressure variations and sub-surface particle motion respectively can continue to operate at designed power levels depending on the degree of submergence.

Other designs such as the floating ring station (19) cannot be completely submerged but in this case the concept is considered to be inherently less susceptible to damage. It has no external moving floats or vanes and because of its circular shape it cannot broach to. Excess power could be also dissipated through orifices rather than through the turbine.

3.5.11 Sensitivity of output to wave height

The energy in a wave is proportional to the square of the wave height and therefore the output of a WPG is similarly affected. It has been demonstrated theoretically however that the output of the air turbine generator on a bobbing buoy is proportional to the cube of the wave height(60). The sensitivity of output to wave height was confirmed in practice by the use in Irish waters of a generator designed for Japanese conditions. Tests with a linear generator on a bobbing buoy demonstrated that a measurable power output required a distinctive plunging motion. In these two cases, where this information is available, the sensitivity has been rated as high. With most other generators where the particular relationship between output and wave height has not been quantitively determined the sensitivity was rated as 'moderate'.

3.5.12 Sensitivity of output to wave length

The sensitivity of a wave-powered generator to wave length is much more easily perceived. For example in a system such as (14) which depends on the relative movement of three floats, one of which is in the crest of a wave, the other two in troughs and vice versa, it is fairly obvious that the output will be a maximum at any one particular wave length, falling off very rapidly as the wave length decreases or increases. Although about 60 per cent of the energy in the Western Atlantic comes in waves of length 300-700 ft it is fairly clear that a system should not be highly sensitive to one particular frequency. As in all the criteria considered so far, with the exception of primary efficiency, an attractive system will have a low rating.

3.5.13 Difficulty of achieving tidal compensation

Ratings on this criteria range from low to high. It is reasonable to expect that the greatest difficulties would be experienced with shore-based stations. One way of achieving tidal compensation with a converging channel/ramp scheme such as (38) is to have a moveable ramp. This would be an expensive solution and perhaps explains why converging channel schemes have usually been considered for areas where tidal changes are small.

A free floating station which does not use a connection to the sea bed in its generating mechanism is considered to have a low degree of difficulty in achieving tidal compensation. A scheme which relies on a sea-bed connection as part of its power generation mechanism could be made to operate under a constantly varying sea level but it is an added complication and the difficulty is rated at moderate.

---

*Since this study was first reported experimental work has indicated that a submerged float would respond to sub-surface particle motion and therefore some level of power might be still obtainable.

3.5.14 Possibility of extracting energy from more than one direction simultaneously

At any one time in an area of ocean, waves of differing height and period may be arriving from more than one direction giving rise to what is known as a directional power spectrum(101). In extreme cases in a storm the energy in the sea waves, generated locally by the wind, might be at right angles to the energy in the swell which may have travelled many hundreds of miles.

Some systems such as a bobbing float symmetrical about its vertical axis, will extract energy from whatever direction it is coming provided that the behaviour of its internal power converting mechanism can respond to such mixed seas. On the other hand, systems such as the oscillating vane device will be operated principally by waves coming from a point at right angles to their horizontal axis. Waves in the sector 90° either side of this direction will still cause the vane to move but with decreasing efficiency as the angle approaches 90°.

Information on directional energy spectra is very limited and will have to be improved upon if detailed design studies of WPGs are to be undertaken. At this stage an ability to extract energy from various directions simultaneously would be an attraction. Further studies might however indicate that it would be better to design systems which are selective with respect to energy direction and thus forego a certain amount of energy in exchange for a more tractable design. A decision on this will depend very heavily on area. Off the west coast of the British Isles the principal wave direction is virtually constant. In any season around 20 per cent of waves are observed coming from the same 30° sector. In the North Sea on the other hand waves coming from the principal direction account for less than 10 per cent of the total in any season and therefore the eastern seaboard is a less attractive proposition for a directional wave-powered generator.

3.5.15 Possibility of re-aligning structure to suit principal wave direction

Wave energy comes from various directions simultaneously but in the longer term over the year the principal direction may change. Thus in the sea off South West England (Area 3, Reference 25) waves are principally noted from 225-255° of north from December to February but from 255-285° from June to August. In area 2, which includes the Atlantic coast of the British Isles, no change in principal direction is noted. In the North Sea the principal wave direction from December to February is 225-255° but changes to 345-375° during March to May. Off the eastern coast of the United States there is also about a 120° difference in the principal direction between seasons.

On first analysis it would appear that to operate in eastern seaboard areas a directional WPG should be able to be turned through more than 100°. In the case of structures up to 1 km long this would obviously pose major difficulties not least with regard to changes in mooring connections. From a navigation point of view it is also better to have a hazard which does not change position with the season. On further reflection and recalling the point made in the previous section it appears that areas in which the principal direction changes significantly from season to season are also areas in which waves from the principal direction occur a smaller fraction of the time. This tends to suggest that criteria 3.5.14 and 3.5.15 can be combined and that stations for areas in which the principal direction varies either season by season or within the season itself should be able to accept energy from more than one direction simultaneously. If directional WPGs were used in such areas their principal dimensions would have to be roughly equal so that they could be rotated without major effort or consequences. For areas where the wave direction does not change much, which are also areas where the waves tend to come from the same direction even within the season, a directional WPG could be employed.

No movement is obviously possibly with a shore-mounted station. Waves however tend to align themselves normal to the shore and this has a compensatory effect. Where however the principal wind direction reverses from one half of the year to the other it is clear that a shore-mounted station is missing, in certain seasons, a large part of the energy which is available offshore.

3.5.16 Likelihood of adverse criticism on credibility and aesthetic considerations

One of the features which adversely affects wave power is its low credibility. This does not seem to apply to the same extent to solar and wind-powered devices which are also renewable sources of energy. It certainly is true that many wave power proposals are of the 'Heath Robinson' variety and this certainly lowers the credibility of other schemes which have been thought through.

Familiarity with the complex technological nature of nuclear power generation also helps to create a resistance against the adoption of what appears to be a primitive technology. The possibility of deriving substantial quantities of energy without limit of time by relatively simple means must appear to call into question the vast expertise and hardware of nuclear technology. This natural bias must therefore be taken into account when assessing the intensity of adverse criticism which is met when even the mere possibility of generating power from ocean waves is suggested.

Applying a credibility criteria may be thought of as a composite of all the previous assessments put together but it is felt that it is more than that. Even if a scheme were technically and economically feasible it may still appear ridiculous in both the public and the professional eye and this must detract from it irrespective of any intrinsic merit it may have.

Aesthetic and credibility criteria are very closely connected being expressed in the adage 'if it looks right it is right'. The aesthetic nature of a wave power system could vary from negative to positive. Highly dispersed schemes with a multitude of bobbing tanks would be considered unsightly by most people whereas a symmetrical floating station with no external moving parts may be considered less unsightly and might even be considered attractive.

3.5.17 Extent of R & D effort required to produce prototype

One criteria which has been postulated as a requirement for a wave-power generator is that it should require a minimum of R & D and should use as far as possible components currently available. Scheme (1), involving floating tanks, is the one scheme most likely to meet this requirement. This may appear as a desirable aim where it is vital to develop a viable system at short notice. However, past experience, even under conditions of extreme urgency, has shown it to be a mistake to assume that this criteria can be met and that in the ultimate it is only possible to have first consideration for the design of the system. Accordingly we have not put great weight on this criteria in the primary selection of suitable systems but will attempt to define the likely level of R & D required for systems after selection.

3.6 The 'Front-runners'

Using the criteria detailed in the previous section we have selected a number of schemes as being 'front-runners'. Inclusion in this list indicates that the schemes selected rate favourably on the criteria adopted and have no outstanding disadvantages which could not conceivably be overcome and therefore merit further detailed technical and economic assessment.

The schemes selected were:

Scheme	Description	Described by	Described in this report on page:
(19)	Floating ring buoy	Masuda	17
(27)	Diaphragm on buoy or submerged station	Kayser	20
(31)	Oscillating vane/ floating structure	Salter	21

Space does not permit arguing the case for each and every scheme in terms of all the criteria employed. The particular problem areas associated with the above schemes are discussed in more detail in Section 5.3 of this report which deals with the possibilities for further R & D in this field.

Scheme (19) satisfies all the criteria discussed. It can accept energy from various directions at the same time and it is felt that it has a high degree of credibility and would be acceptable on aesthetic grounds. It is discussed in more detail in Section 4, page 32.

Scheme (27) is considered to be sufficiently attractive to warrant further investigations. For generating large quantities of power the originator proposed a station situated on the sea bed as opposed to the smaller taut-line buoy units. It is more likely however that a semi-submersible or tension leg structure would provide the containing structure for large-scale schemes.

Scheme (31) has been selected as one of the front runners principally because of the very high efficiency demonstrated by a rigidly mounted vane in the small-scale model tests. It is emphasised however that there are very large areas of uncertainty to be resolved with this scheme particularly in regard to its operation in a free-floating mode and the engineering of a power transmission system.

3.7 Unselected Schemes

It is appropriate at this point to comment on a number of schemes which have not been included in the list of front-runners even although they have been receiving considerable attention.

Scheme (1), page 12, involving the motion of floats connected to the sea bed has been rejected for a number of reasons the principal ones being:

Low primary efficiency (<40 per cent)

Difficult to access for maintenance and repair

Stress concentration inherent in single-line connection power take-off

Reliance on lengthy connections to sea bed for power take-off

Inability to operate at reduced levels of power in storm conditions*

Multitude of small units considered to present a considerable hazard to navigation and shipping

Experience of operating float systems has indicated that this type of system is invariably damaged by heavy seas

Low credibility with both professional and other commentators

Low aesthetic appeal.

Scheme (8) - the tail tube water turbine device being developed by Scripps Institute - is claimed to be highly efficient, outputs of 65 kW/m being thought possible in 8 ft significant waves. The main objection to this device is the very long length required, 300 ft, which will obviously limit the areas in which the device can be installed to well offshore; the structural integrity of such a concept is also likely to present difficulties.

Scheme (9), page 14, developed by Fagersta also appears to be attractive. Power levels of 50 kW/m are considered possible. While it would appear that model tests show that a specially designed rotor suspended on a rigid connection below a float can be made to rotate and transmit power, there are a number of drawbacks. Firstly, as in all floats bobbing up and down, the primary efficiency is limited, secondly, the turbine would have to be suspended to a considerable depth below the float if it is to be in water unaffected by water particle motion. Because of this and also because a float unrestrained in the horizontal plane moves in an elliptical path the analysis of the motion of the turbine in the water would be exceedingly complex. Tests undertaken elsewhere have demonstrated the capacity of a turbine moving up and down on a purely vertical axis to generate power but it is felt that the likely behaviour in a sea environment is not sufficiently well understood to suggest that the method has anything other than a very low primary efficiency.

All of the above three schemes which have been rejected depend on the vertical component of motion of a float. In general this reflects our feeling that schemes should not depend on the movement of the structure as a whole but on the effect of the wave or some part of it such as the vane in (31) or the internal movement of air in (19).

Scheme (20) is a platform version of the floating wave chamber described in (19). That this is considered technically feasible is indicated by Okinawa Electrics' plans to build a 100 kW demonstration unit. On the other hand building a rigid platform and providing tidal compensation will incur heavy costs and it is likely that these will render this approach uneconomic. Costs of 8p/kW h which could be brought down to 4p/kW h are being quoted for the 100 kW unit. If 'used' oil platforms or rigs were to become available being no longer required for their original purposes it is possible that conversion to this type of scheme could provide limited numbers of economically viable units.

In considering wave-power schemes we have almost entirely rejected, without costing, shore-based schemes. Such schemes would involve major despoilation of the coast, have to be compensated for tidal movements and more important, would involve very large single schemes whose design would be very strongly influenced by local conditions.

---

*See note on page 27.

If major investment in coastal schemes were to be considered theoretically possible a very strong case would have to be made to demonstrate their technical and economic superiority over the tidal schemes proposed for the UK. No quantitive comparison has been attempted but it is considered very unlikely that a coastal wave station could compete with the most promising of the tidal schemes.

One coastal scheme which could be usefully re-appraised is (22) described by Jacobs who estimated installed costs of \$430/kW in 1956. The 'groynes' which form part of the collecting horn are likely however to alter patterns of sand movement along beaches.

The following two schemes have been proposed but have not received much attention; however in our opinion they should not be completely dismissed.

Scheme (23) is in many respects very similar to (19). Unlike (19) however it is a purely theoretical concept and none of the components have been built or tested. It is a directional scheme but could be rotated to meet main wave directions and its ability to be tuned to the predominant wave length is considered to be its particular advantage. Any further study of an air turbine scheme should consider this concept as an alternative embodiment of the floating ring buoy.

Scheme (26) has not been described in detail, only the sub-units on which it might depend. This scheme would consist of a floating or static structure with a multitude of vertically disposed pipes. The action of the wave passing through the array of vertical pipes is to cause an oscillating flow within the pipes causing a specially designed water turbine to rotate in the one direction irrespective of the direction of water flow.

3.8 Costs of Wave-power Generation

Most proposers of wave-power schemes stop short of trying to estimate the costs of their schemes. The few estimates which have been made are given in Table 6 for reference and for comparison with the costings produced by this study. A number of the studies were carried out around 20 years ago and one as early as 1911! Costs quoted for these years have been converted to sterling where necessary and updated using relevant price indices(102,103) Where production cost/kW h is quoted the capital costs have been annuitised at 10 per cent unless otherwise stated.

Although costs have been estimated by a number of workers over a span of 60 years (for completely different types of scheme) it is remarkable that excluding the ridiculously low figure of £70/kW all capital costs quoted at various or unknown load factor are within a range of £175-350/kW, a span of 1:2. Expressing these capital costs at unity load factor, where possible, gives a range of £300-600/kW.

There appears to be little correlation between the size of the 'module' and costs. (In the case of a number of floats or devices feeding a single turbine/generator the size of the 'module' is defined here as the output from one float or device.)

4 ASSESSMENT OF SELECTED SYSTEM

4.1 Selection of the Most Promising Scheme

Having listed the 'front-runners' (Section 3.6) this study was to have picked the 'most promising scheme' for the purpose of further technical and economic assessment and one scheme has indeed been selected for this purpose, scheme (19), the floating ring buoy concept proposed by Masuda(79). This particular scheme appeared at the time of selection to satisfy all the criteria which were put forward in Section 3.5 and it also appeared to be of such construction that its cost could be readily estimated. Having undertaken the assessment it was found that this thesis was partly justified but that considerable uncertainties on the technical design still remained. Consequently, we still rate this scheme as one of the 'front-runners' but it would be pretentious to claim that it, and it alone, merits the title of 'most promising scheme'. Moreover, the costs estimated for the scheme are inevitably based on untested technical assumptions about its operation and therefore these costs should be viewed with this firmly in mind.

The particular merits which led us to select this system for further assessment were:

a No large external moving parts.

b High efficiency claimed for wave to air energy conversion from tests carried out on floating breakwaters and rigidly held chambers.

c The valved air turbine/a.c. generator system has already been demonstrated to be effective and reliable in small units operating in the marine environment.

d Fabrication of floating ring buoy could be undertaken using existing shipbuilding and construction technology.

e Overall system has a higher credibility rating than most others and could well lend itself to multiple-use applications.

On the other hand this system shares the same areas of uncertainty as other wave-power generators namely:

i Motion of the structure in real sea conditions.

ii Forces exerted by wind, current and waves on the structure.

iii Structural design and mooring requirements.

iv Arrangements for collecting power from a number of stations and transmission back to shore.

Uncertainties peculiar to this particular scheme are likely to be:

I Air displacement pattern within each chamber in real sea conditions.

II Optimisation of valve/air turbine/generator parameters.

III Harnessing the output from a large number of generators or integrating a large number of air flows to an air turbine.

4.2 System Design

The system presented in Figs 31, 43 and 44 and described earlier (page 17) represents an extension of the principle already successfully demonstrated over a period of 10 years for powering navigational buoys and lighthouses.

The principle of operation is simple. The large floating structure (Fig. 43) is constructed of such a size as to be longer than one wavelength of the prevailing seas. Table 7 is based on observations recorded in the form of scatter diagrams (Fig. 3) and provides the range and mean values of wavelength, period and height. From this data the overall length of 1000 ft was assumed to provide a stable structure whose position would not vary much above or below the mean sea level.

The unit is divided into chambers, in which the wave motion produces a varying air pressure of sufficient magnitude to move large volumes of air through non-return valves and nozzles, which accelerate the flow, into an air turbine. Similarly when the internal air pressure falls lower than total ambient pressure, air is drawn through the air turbine from the atmosphere.

The physical height of the structure is based on two related major points. Firstly the largest wave likely to occur and be a physical danger to the structure and secondly the major 'normal' wave height. The first limit is set by the '50 year design wave' (Fig. 7) and the second as the maximum wave height occurring in a 12-month sample, ie the scatter diagram (Fig. 3). Both of these wave heights are dependent on the geographical location. In the same way, generator rating will also be dependent on location due to differing availability of power (Fig. 9). For this exercise the data relevant to Sevenstones light-vessel, 20 miles south west of Land's End, has been used.

Fig. 44 is a cross-sectional view through section AA of Fig. 43, drawn approximately to scale is a 250 ft long wave of 7-second period whose height is 5 ft, ie the most regularly recurring wave pattern in the Sevenstones area. The change in volume due to the wave moving from its minimum to maximum position is about 180 ft^3 for each foot length of chamber. For the dimension assumed this means a volumetric flowrate of (180 × 70 ft)/7 s = 1800 ft^3/s. The volume of the outer chamber is approximately 1256 ft^3 per foot length of chamber.

From PV^{γ} = constant and assuming $\gamma = 1.3$ and the chamber to be closed, the pressure variation Δp may be estimated,

$$\Delta p = \pm \frac{P_{mean} V_{mean}^{1.3}}{V_{max}^{1.3}} - P_{mean}$$

$$= \pm P_{mean} \left(\frac{V_{mean}^{1.3} - V_{max}^{1.3}}{V_{max}^{1.3}} \right)$$

$$= \pm 14.7 \left\{ \frac{1256^{1.3} - \left(1256 + \frac{180}{2}\right)^{1.3}}{\left(1256 + \frac{180}{2}\right)^{1.3}} \right\}$$

$$= \pm 1.26 \text{ lb/in}^2 \ (\pm 0.08 \text{ kg/cm}^2).$$

Obviously these values of pressure variations and volumetric flowrate will not occur at the same time due to the fact that air is flowing out of the chamber and the loading on the turbine will reduce the wave height in the chamber.

Taking the pressure variation as a 'head' of air and using normal water turbine practice it is possible to estimate that the turbine runner diameter is likely to be approximately 5-6 ft for operation in the speed range 1500-3000 rev/min.

Fig. 45 has been computed from the scatter diagram for Sevenstones and is presented to show in terms of power spectrum and cumulative power output that most of the energy occurs at the lower wave heights. In addition the extreme energy levels (calculated from the minimum and maximum values of wave period at any one wave height on the scatter diagram) rise steeply as wave height increases. This quantity also gives an indication of how generator and transmission costs would vary with wave height.

Since the cumulative power output tends to level off with increasing wave height, and costs will also rise with wave height there is a strong case for limiting the amount of energy to be accepted by the system.

The three power limits, (a), (b) and (c), of Fig. 45 are included to illustrate the effect of limiting power generation to a specific level. Similar data, relating power limit to a mean annual energy level, presented in tabular form by Salter(92) is in agreement with this figure.

For this exercise the arbitrary limit of 100 kW/m has been selected. This corresponds to an annual available power figure of 206 000 kW h/m (ie a mean level of 23.5 kW/m).

Masuda's work(79) suggests that the concept under consideration will present 60-70 per cent of the wave energy to the air turbines so that allowing for turbine efficiency it is fair to assume that the generator may be rated at 50 per cent of the accepted energy level. Therefore for a 70 ft long chamber the generator rating would be

21·336m

$$\frac{0.5 \times 100 \times 70 \times 0.3048}{1000} \text{ MW} \equiv 1.0 \text{ MW.}$$

4.3 Component Parts

The following parts list is based on a hypothetical design which was initially assumed suitable for use in any sea area.

a Superstructure

It is assumed that all steel used is $\frac{5}{8}$ inch thick (as is common in shipbuilding practice) and that each chamber is braced internally by a steel honeycomb fabricated from 15 ft by 8 ft mild steel plate. For simplicity it is also assumed that the unit consists of 80 identical chambers. Fig. 46 shows an exploded view of the chamber and the assumed average dimensions. Table 8 lists the areas, weld lengths and weights used to estimate the cost of the superstructure.

		£	£
Material	26,500 tons of 8 × 15 ft mild steel plate @ £105/ton	2,782,500 13·2 kwht/ton	$36{\cdot}729 \times 10^6$ kwht
Preparation	Shot blasting by 3 wheel plant (£10 wheel/hour) at 6 ft/min; 100% handling time	96,000	2,878,500 10×10^6 kwht

ASSUME 50% OF COST IS ELECTRICITY
AT 2p/kWhr

$$4{\cdot}192 \times \frac{1}{0{\cdot}02} \times \frac{96{,}000}{2} =$$

ENERGY
INTENSITIES FOR 68
INFLATOR 2·071 ⇒ 75 PRICES
↓

		£	£	
Carried forward			2,878,500	
Painting	One coat primer @ £10/gallon and 500 ft^2/gallon	92,000		6.6×10^6
	PAINT 14882			
	Two finishing coats @ £13/gallon and 600 ft^2/gallon	208,000		14.9×10^6
	PAINT 14882			
	Labour 30 ft^2/min @ £4/hour ZERO'	31,000		ZERO
Fabrication	576,376 ft @ 5 ft/hour @ £4/hour	462,000	793,000	15.1×10^6
80 SHIPBUILDING and Marine Eng.	, SHIPBUILDING 67·8			
			3,671,500	

The provision of such items as catwalks, landing platforms, power points etc, cannot be estimated without a more specific design exercise. However it would seem reasonable to allow a further 30% to cover such items. 1,102,000 28.3×10^6 kWh

80 Shipbuilding and Marine Eng. FITTING 53.2

Total: 4,773,500

SUPERSTRUCTURE TOTAL
111.629×10^6 kWh
⇒ EN. INT.
123·391
($\times$ 2·071 = 48·43)

Ferro-concrete could be used for the superstructure and the costs could be reduced in the ratio 8/13. Therefore the superstructure cost may be £2,938,000. £2,938,000

b Valves

These may be made from sheet metal or glass reinforced plastic at approximately 50p/ft^2 (including fitting) = £21,000

52 - 58·94 $\cdot 60 \times 10^6$

c Air Turbine and Nozzles

One runner and two sets of nozzles for use under the conditions at Sevenstones would cost approximately £10,000 each, 80 @ £10,000 = £800,000

52 - 5894 22.8×10^6

d Generator

A d.c. generator has been assumed, although in reality the design and choice of type would be optimised to suit the location. It is sized to take power up to the maximum arbitrary limit of 100 kW/m on the assumption that 50 per cent of available energy reaches the generator, ie 1.0 MW.

MY EL MACH WORK 62·98

80 × 1.0 MW @ £6/kW = £480,000

14.6×10^6

e Terminal Equipment

For reactive compensation on shore, 80 × 1.0 MW @ £20/kW = £1,600,000

MY EL. MACH. WORK 54·24 41.9×10^6

f Transmission

The cost of 33 kV cable rated at 100 MVA is £2,250/MW mile.

80 × 1.0 MW × 5 miles × £2,250 = £900,000 34.0×10^6

72 - 78·31

£6,739,000

TOTAL 225.524×10^6 6,974,500 ??

Carried forward £6,739,000

g **Cable Laying**

5 miles @ £10,000/mile = £50,000 ·96×10⁶

39·70 CONSTRUCTION (PUBLIC)

h **Mooring Cost** = £40,000 ·77×10⁶

Therefore total cost (for concrete structure) = £6,829,000

227·259 ×10⁶ kWht

4.4 Unit Costs

The nature and occurrence of wave energy is such that conventional criteria cannot apply in reaching a value of cost per kilowatt with any real meaning. To emphasise this point the calculations have been done in two ways, the first based on the power generated and the second based on installed capacity at a particular load factor. Load factor itself is very sensitive to whether or not all the wave energy is accepted or whether the large, less regularly occurring bursts of energy can be ignored, or even if only the smaller waves (which provide the 'firmest' power) are used.

Both methods naturally yield the same price per kW h which gives perhaps the best 'feel' for the true cost.

Assuming that 70 per cent of the accepted energy is absorbed as useful power, then the power produced by one 1000 ft long float 1000 ft = 304·8

$$= 0.7 \times 1000 \times 0.3048 \times \frac{206\ 000}{8760}$$

(206 000 kW h/m; from the arbitrary limit of 100 kW/m at Sevenstones)

= 5017 kW. 43·98 ×10⁶ kWh/year

⇒ AVERAGE 16·46 kW/m

(POWER LIMIT $\frac{16·46}{·0627} = 262·5$ kW/m)

The unit cost expressed in terms of generated power

$$= \frac{6\ 829\ 000}{5017} = £1,361.2/\text{kW}.$$

This may be expressed in terms of installed capacity as

$$\frac{6\ 829\ 000}{80 \times 1.0\ \text{MW} \times 10^3} \text{ at load factor } \frac{5017}{80 \times 1.0\ \text{MW} \times 10^3}$$

$$= £85.4/\text{kW at load factor } \boxed{0.0627}.$$

16·46 kW/m

TOTAL AVAILABLE 91 kW/m (MOLLISON)

⇒ 18%

Both methods of expression result in the same price per kW h, eg

	(A)	(B)
Capital cost	£1,361.2	£85.4
Interest during construction at 15% for 3 years on half the capital	£306.3	£19.22
	£1,667.5	£104.62

GJ
29.9.81

life 25y
± 30y
e.s.
5.795
= 5.8 kWhe/kWht

E.R. ·193
EFFIC. 18%

ENERGY RATIO

$$\frac{43·9}{227·259} = 0·193\ \frac{\text{kWhe}}{\text{kWht year}}$$

⇒ ENERGY PAYBACK TIME 5·18 years

Running cost = £100,000	$\frac{100\,000}{5017}$	$\frac{100\,000}{80 \times 1.0 \times 10^3}$
	= £19.93	£1.25
Annuitising capital cost and interest during construction over 30 years at 10% (factor 9.4269)	£176.89	£11.10
	£196.82	£12.35
Units generated per annum	8760	8760 × 0.0627
Therefore cost in pence/kW h	2.25p	2.25p

To provide a better idea of how the choice of location affects the cost of generated power, the same basic structure could be situated one mile west of the Hebrides, where a power limit of 300 kW/m and the local average energy level of 67 kW/m gives the generator rating,

$$\frac{0.5 \times 300 \times 70 \times 0.3048}{1000} = 3.2 \text{ MW}$$

and the generated power $= 0.7 \times 67 \times 1000 \times 0.3048$

$= 14\ 295$ kW.

The increased cost of generators, terminal equipment and transmission raises the total cost to £11,041,000.

In terms of:	(A) generated power	(B) installed capacity
Unit cost:	$\frac{11\,041\,000}{14\,295}$	$\frac{11\,041\,000}{80 \times 3.2 \times 10^3}$
		$\frac{14\,295}{80 \times 3.2 \times 10^3}$ load factor
	= £772.4/kW	= £43.13/kW @ 0.0558
Interest during construction	£173.79	£9.70
	£946.19	£52.83
Running cost	$\frac{100\,000}{14\,295}$	$\frac{100\,000}{80 \times 3.2 \times 10^3}$
	= £7.00	= £0.391
Annuitising over 30 years at 10%	£100.37	£5.60
	£107.37	£5.991
Units generated/annum	8760	8760 × 0.0558
Cost pence/kW h	1.22p	1.22p

The system considered has been conceived very much as a universal structure suitable for use in a range of energy densities. The calculations above indicate that optimisation of the accepted power level will influence unit cost. The same is certain to be true of the structure, where structure design and cost could be optimised to meet the range of conditions prevalent in the area selected for its operation.

5 THE DEVELOPMENT OF WAVE POWER IN THE UK

5.1 The Need for an Alternative Power Source

It is not the purpose of this study to argue the case for wave power but to throw more light on its technical and economic feasibility to enable decisions to be taken on its further development. The main reasons for considering alternative sources could be summarised thus:

a Indigenous nature of renewable sources.

b Modular and decentralised and therefore less vulnerable to damage. Damage itself would not have secondary consequences.

c Likely to be much less complex than nuclear systems and less demanding in the level of design, operation and maintenance skills required.

d Because of the possible limits to thermal pollution or on other grounds it may be desirable to determine that a certain percentage of a country's energy should be produced from renewable sources (wind, solar, tidal, wave).

5.2 Alternative Sources of Energy in the UK

If we accept as a premise that the UK should consider utilising some form of alternative energy source the main contenders apart from wave power must be:

Solar
Geothermal
Tidal
Wind.

Solar, principally in its direct form, could provide, even in the UK, a considerable energy saving in the heating of domestic hot water but is unlikely to be a serious contender in the generation of electricity. Biosynthesis of vegetation for eventual use as a fuel does not appear to be a reasonable alternative in the UK bearing in mind the low yields, very long lead times and the competing use for forest products. Geothermal energy too does not seem to be a viable prospect for the UK leaving only wind and tidal power as serious competitors. Wave power is of course a form of wind power which is in turn a form of solar energy but in transferring to wave power there appears to be a number of distinct advantages.

a On selected sites in the UK wind power could only provide something like 25 000 million kW h per annum(104) whereas it is estimated that wave power could, in theory, supply over ten times this quantity.

b Wave motion does not primarily involve a transport of working fluid and therefore energy can be transmitted a great distance with less attenuation. The energy arriving in UK waters in the form of waves may have been produced by strong winds blowing several thousand miles away. In designing a windmill there are two opposing constraints; to achieve maximum energy from the wind its velocity has to be reduced but at the same time the mass flowrate of the wind has to be maintained. These opposing design constraints do not occur in the wave energy situation. Wave powered generators can be designed so that the structure does not have to resist a nett horizontal thrust unlike a windmill where resistance against thrust and overturning must be built into very high structures.

c Neither wind nor wave energy is as firm as the best conventional or nuclear plant but both are highest in the winter when demand is highest. Wave energy is however predicted to vary less in intensity from second to second and would take longer to change from one level to another.

d The ratio of maximum/average levels of energy in a wave situation are much less than the same ratio for wind. Output from a windmill varies as the cube of the wind speed which means that a windmill rated at 100 kW at 30 mile/h would be subjected to a potential power level eight times as large at 60 mile/h. Wave energy on the other hand as seen by most wave-powered generators is proportional to the square of the wave height giving a narrower band of energy for which to design.

e One disadvantage attributed to wind-power generators is the visual despoilation of the countryside. Wind-power stations can however be considered in an offshore context as has been proposed by Heronemus(105). Situated in this way a direct comparison can be made with wave-power generation.

The main advantage wind power could offer on a limited scale is that the development and production lead times could be very short. If windmills were sited on land maintenance would be very much easier than that expected with offshore wave-power stations. Storage of energy could be more easily effected in a number of ways, or alternatively, power from the windmill could be put to uses other than the generation of electricity.

Tidal energy appears to be the most serious competitor to wave power. In fact many would consider it strange that wave power is even considered as a serious competitor to tidal power. Compared to wave-powered generation it is already in use and therefore has been demonstrated to be technically feasible although not economically attractive. Other advantages of tidal power are:

i Although not constant in output it is predictable and therefore can be integrated into a larger system.

ii In most cases schemes can include a degree of storage and provide 'firm power' within certain limits.

iii Other benefits may arise from the building of a barrage such as the provision of roadways, improved navigational and recreational facilities.

The main disadvantages of tidal as compared with wave power appear to be:

I Sites for tidal schemes are limited to one or two main locations and consequently potential output in the UK is limited to around 20 000 GW h/year, corresponding to an installed capacity of around 6000 MW. This by itself should not mean that the best scheme should not be undertaken because the total amount is limited.

II There is no seasonal variation such as is available from wind or wave sources which provide the most power when it is required.

III Although the development time for a tidal scheme would be less than that for wave-power schemes, construction would take longer especially when it is likely that tidal schemes would attract public enquiries and consequent delays, modification or even rejection of schemes.

IV Unlike wave-power or wind-power schemes tidal stations represent massive single capital investments. Such large single disbursements are unattractive to spenders at any level be it local authority or national government. Wave-power stations of perhaps 25 MW costing £12 million each could be installed at a rate to suit a compromise of energy forecasting and capital availability. The Severn tidal scheme on the other hand would demand an investment of the order of £1,000 million.

V Tidal power schemes also present an entirely different level of risk from wave-power schemes. If a technically successful tidal scheme were implemented in the UK its benefits would be evident. On the other hand if for external or internal reasons the scheme fell short of its theoretical performance in operation a very large amount of capital would have been disbursed and would be unrecoverable. Wave power unlike tidal could be attempted with prototypes, and the experience gained used to improve design and the cost estimates of production on a large scale.

5.3 A Role of Wave for Power Generation in the UK?

It would appear then that wave power does stand out as the most attractive among the alternative sources and therefore it is appropriate at this point to assess how wave-power generation meets the main criteria and where areas of uncertainty lie.

5.3.1 Amount of power available

This study confirms, on the statistics available, that the UK could meet a substantial portion of its energy needs from the wave energy around its coast. A number of assumptions were made in the deriving of energy figures from wave data. Design of generators would demand further effort on wave data collection and processing in specific areas of sea.

5.3.2 Technical feasibility

Generating power from sea waves is technically feasible, a number of systems have been selected as front-runners but all require research and development. It is unlikely that a prototype of any system could be developed in less than 5 years.

5.3.3 Credibility

Generating power from ocean waves has had a low credibility. This report which has described past and current investigations must surely have helped to show that wave power is not in the realms of science fiction as has been asserted(106) but has been achieved on a small scale and is being seriously considered not only in the UK but elsewhere for large-scale power generation. In addition the concept of very large offshore conventional or nuclear power stations is being actively investigated in the UK(107) and in the USA(108). Both the USSR(109) and the USA(110) are using ships and barges with gas- or oil-fuelled generating plant to supplement local demand for power.

5.3.4 Economics

From the rough cost estimates which have been produced by others and by this study it is clear that wave-power generation falls into a grey area. Current estimates indicate that costs would not be low enough to make wave power compellingly attractive nor does it appear that costs would be absurdly high. Without further design and development work it is not possible to be more precise than this. In suggesting the need for further development it must be emphasised that one function of R & D is to provide the information required to take major capital investment decisions. Further work to determine the economics of wave power could decide in which of three categories wave-powered generation lay.

i Capital cost less than nuclear plant and therefore justified on economic grounds alone.

ii Capital costs higher than nuclear power but the additional cost balanced by benefits based on strategic considerations or multiple use of offshore platforms.

iii Capital costs so much higher than nuclear that the additional cost far outweighs any conceivable summation of benefits.

5.3.5 Production capability

The advent of North Sea oil operations has fundamentally changed the credibility of the concept of large floating platforms. Without these operations the design and construction of large wave-powered stations off the coast of the UK would have required the setting-up of a completely new industry. As it is, construction facilities are now available to build offshore structures and with the limited life of oil fields it is likely that capacity to build structures other than oil platforms will become available around the time when decisions could be taken whether or not to construct wave-power stations. Various estimates exist as to the need for platform building after 1980. Some yards see a continuing work load for the next 20 years but it would seem most likely that spare capacity will become increasingly available from about 1983 on. With the pressure on steel and concrete suppliers and fabricators and other suppliers of offshore equipment and services, it is likely that competition for resources would be created if wave-powered constructions were demanded on a significant scale before the mid 1980s.

5.3.6 Other benefits

Multiple use of ocean platforms

In recent years attention has focused on moving a number of traditionally land-based operations onto various floating structures. Recently, for example, Pertamina of Indonesia has commissioned the conversion of two bulk carriers to floating Ammonia and Urea plants(111). Gordon(110) has recently reported on the following concepts and the firms concerned:

Barged gas turbine units	Consolidated Edison, USA Electrobras, Brazil George Wimpey, UK
Offshore nuclear power	Public Service Electric & Gas Co (N.J.), USA
Offshore nuclear power/office buildings	Kansai Electric Power Co, Japan Mitsubishi, Japan
Offshore nuclear power barge	Association Européène Oceanique, Monaco
Semi-submerged nuclear plant	Rand Corp., California(112) Naval Undersea Center, California, USA

Offshore industrial waste processing coupled with ship repairing, oil and chemical storage, gas liquefaction and sewage processing	Bos Kalis Westminster Dredging, Netherlands Study sponsored by Phillips & Shell
Sea-bed mining/floating processing plant	Ocean Resources Inc., San Diego, California
Sea-bed mining/floating processing plant coupled with fishing base and fish processing	Naval Undersea Centre, Hawaii

Green(113) had in his Oceanic Resources Base concept contemplated a massive floating configuration situated in the Cromwell current powered by low-head turbines which would combine the formation of fishing banks by raising nutrient rich waters, mining of sediments and nodules, processing of sea water, electric power generation, housing, tourism and oceanographic and meteorological research. Part of the cost of the floating base is in the provision of a breakwater array to damp out storm waves! Hanson(39), summarising the prospects for open sea mariculture, does not overlook the possibility that waves could be used to provide the energy source for open sea mariculture platforms.

Viscount Caldecote has also drawn attention to the valuable spin off which can be expected from the expansion of the offshore industry and has suggested(114) that 'a good example is likely to be the development of large offshore structures for such things as air bases and heliports, supply depots, radar and navigational stations, lighthouses, power stations, hotels and even cities'.

Any of the foregoing uses which are being currently proposed for offshore platforms would, if realised, radically alter the economics of wave-power generation. Both the wave-powered systems of Salter and Masuda, schemes (31) and (19), lend themselves to deployment around the periphery of a floating structure. In Masuda's concept the central area is left open. If this central area were to be covered over and the area 'sold' to other users or if peripheral space on offshore processing platforms could be 'rented' to install wave generators then considerable reductions in capital cost could be achieved. This is an obvious oversimplification of the situation as it would probably be necessary to design the system as a whole. Whether or not the UK installed multiple-use platforms there could be a market for wave-powered generator modules to attach to platforms which may be built by others. An indication of this is that NEL has already been approached by a company operating in the North Sea which is examining the possibility of utilising wave power in a production platform situation.

The situation in regard to the increasing attention to offshore activities and multiple use is nicely summed up by quoting Hanson(39).

1 "It seems likely that as environmental and other pressures make shore-side siting of large-scale power facilities ever more difficult and expensive, power production will begin to follow petroleum to sea."

2 "The most important point to be emphasized with respect to man-made offshore platforms is that they are relatively expensive. Therefore, any non-conflicting multiple use that can be made of them can help to increase their profitability and defray their capital and maintenance costs."

5.4 Wave Power R & D - The Options

There are various possible options for the further development of wave power in the UK ranging from no further expenditure to the setting-up of a Wave Power R & D Centre with extensive facilities. It will be appropriate to discuss the various levels of expenditure in relation to the specific schemes selected as front-runners in Section 3.6.

Low profile programme

The decision made to support S H Salter at Edinburgh University (£65,000 over 3 years) and by the CEGB to undertake work in wave power at Marchwood obviously precludes the option of allocating no expenditure to R & D on wave power. Salter's work is being supported by the Mechanical Engineering and Machine Tools Requirements Board and is to be monitored by NEL. NEL supported Salter's submission because the model device appeared to be the most efficient converter of wave energy to have been developed and because the ability and motivation of the staff involved suggested that the viability of this type of device would be established as a priority. The University of Edinburgh team will be concentrating in the first instance on building and testing models to assess the structural feasibility of wave-power installations. Without further work it is probable that the technical problems associated with the power transmission mechanism of this device will be as difficult to solve as its structural behaviour and therefore it is recommended that additional resources be brought to bear on this part of the problem. This package, the University of Edinburgh effort monitored by NEL and supplemented by additional effort on power transmission mechanism development, plus the work of the CEGB, is defined here as a low profile approach. Additional effort would be required from bodies such as the Institute of Oceanographic Sciences on wave data collection and interpretation.

Medium profile programme

Even if only the low profile approach which is geared to one particular scheme is adopted, a considerable effort will have to be expended on activities which are not exclusively related to that particular scheme. In particular, the test facilities, wave data collection, the monitoring of wave power research elsewhere, mooring studies, transmission studies, will all be applicable in whole or in part to the studies of other systems. This suggests that it would be possible to examine two alternative systems at less than twice the cost and by so doing double the probability of success. At this stage in the proceedings it would seem prudent not to decide the future of all wave-power generation on a system which promises high efficiency but which is at an earlier stage in its development.

We feel at least one other scheme should be studied in addition to the oscillating vane scheme. The most attractive concept on which to undertake further study is the use of wave motion to displace air and drive an air turbine. The floating ring concept which we selected above probably represents the most attractive embodiment of this type of scheme; another is the standing wave system of Fadden (scheme (23)). Neither of these concepts have been invented within the UK and therefore any proposals for development would have to be co-ordinated with work abroad. Only recently has it been learned, for example, that Mitsubishi and the Japan Marine Science and Technology Centre are re-examining Masuda's work in their laboratories. Neither Fadden nor Masuda have taken out patents in the UK on their schemes but the possibility of this happening should not be overlooked.

If initial design and tests were favourable the development of a prototype of this type of scheme could be undertaken much sooner than the oscillating vane design - the main uncertainties would be readily, but not cheaply, ascertained. These are likely to be the optimum geometric dimensions, the mooring arrangements and the harnessing and control of a large number of air turbines and electrical generators operating under varying input conditions.

Our best estimate at this point in time is that a complete design study for a prototype including testing of components and models could possible be confined to a period not exceeding 3 years. Similarly, the best estimate of cost is of the order of £250,000 at 1975 prices. The study would require the involvement of a number of centres of expertise, the management of which would present a considerable challenge.

High profile programme

To complete the range of options it would be possible to consider setting up a special-purpose centre with its own budget on the lines of an establishment such as the UKAEA or the research establishment of the generating authorities. We do not recommend this course for the following reasons.

a Staff and facilities are already active in a number of centres, universities, nationalised industry and government establishments. Bringing these together would be administratively very difficult and staff and facilities are in any case not generally 'mobile' resources.

b Although good communication between R & D staff would be achieved a considerable delay would be experienced before effective work could be undertaken.

c If early studies did not confirm the viability of wave power the centre would have to be run down and dispersed.

On the other hand, examining the concept of a centre stresses the need for communication between different groups and it is considered vital that parties active in this field should have some mechanism for getting together on a regular basis.

Speculative activities

One of the problems of wave or wind power generation is the need to provide back-up or energy storage facilities, if these sources represent a significant fraction of the total generating capacity. One of the possibilities in this respect might be to produce hydrogen by electrolysis. This has already been proposed in an offshore power generation context(105). It is recommended that the production and transmission of hydrogen from wave-power stations should be studied as a possible means of converting a varying energy input into a fuel which can be utilised in a number of ways as and when it is required.

6 CONCLUSIONS

1 The data on wave heights and periods which are available for specific locations off the British Isles have been analysed and estimates of the energy present have been made.

2 The wave energy on a 1700-mile long contour, 10 miles from the shore around Great Britain during the course of a year, is estimated at around 500 million megawatt hours. This is more than twice the combined annual energy output of the Electricity Boards in Britain*.

3 One of the attractive features of wave energy is that it is at a maximum in the winter when comsumption is also at its highest. There is however a greater variation in wave energy available than energy demanded with the result that there would either be a shortfall of energy in the summer or a theoretical excess (over the maximum installed rating) in the winter.

4 On the assumption of an overall (capture and conversion) efficiency of 25 per cent, half the total British requirements for electricity* could be met by the wave energy in a stretch of ocean between 600 and 1400 miles long. The shorter length corresponds to all generation being undertaken at the best sites. If allowance is made for current navigational clearways it is estimated that the 1700 miles available would be reduced to 500-1000 miles depending on distance from the shore.

5 Putting wave-power generating stations into UK waters in any significant numbers is likely to cause difficulties to existing fishing operations. There may however be benefits to be gained from the existence of floating structures which tend to attract fish or which could be intentionally used for mariculture techniques. Floating structures could also be used to limit the access of vessels to certain areas and thus prevent overfishing particularly by foreign vessels.

6 The effect on the coastline of removing wave energy cannot be easily assessed. There can be little doubt that removing all of the wave energy on a continuous line not far from shore would have a significant effect on coastal erosion, deposition and sea-water turbidity. To determine the magnitude of these effects and whether they would be beneficial or harmful would require specific studies of particular generating schemes at particular locations. It is unlikely however that any practical wave-power scheme would extract more than a half of the total incoming wave energy.

7 Certain designs of wave-power generator may not be unsightly. In general generating stations would most likely be sufficiently far off shore or of low enough profile not to have an adverse effect on visual amenity. Certain designs of stations could also provide positive recreational benefits such as fishing platforms.

8 The levels of wave energy in the North Sea and off the south of England are roughly the same as the levels of energy off the USA, Canada, Japan and Australia. The Atlantic approaches of the British Isles, excluding south west England, have however much higher wave energy levels and more constancy of wave direction than any other sea area in the world adjacent to areas of high energy consumption.

---

*At 1974 levels.

9 Ideas on wave-power generators are not new. From 1856-1973 it is estimated that over 340 British patents on wave-powered generators were granted. The rate of invention was highest between 1900 and 1930.

10 A schematic diagram has been devised to classify the various principles of operation embodied in past and current proposals and 38 system types have been described. A review of wave-powered generators built and tested to date has been undertaken.

11 Contrary to first impressions there is considerable and increasing activity in the UK and in other countries on wave power. Assessment and experimental work is being undertaken in the USA, France, Germany, Sweden, Finland and Japan. A list of all the organisations concerned with wave power has been produced.

12 Criteria for the selection of wave-powered generators have been outlined and using these criteria, three promising schemes, the 'front-runners', have been selected. Among these front-runners are the floating ring buoy concept described by Y Masuda and the oscillating vane device invented by S H Salter.

13 The floating ring buoy concept was also further selected for a more detailed assessment as it appeared to offer technical feasibility at reasonable cost and because its use of established practice rendered it capable of assessment, in very broad terms, without prior R & D.

14 With no provision for back-up it is estimated that the floating ring buoy concept could cost from £700-1400/kW (equivalent to unity load factor) or more meaningfully could produce electricity at about 1.0p/kW h annuitised at 10 per cent. No undue emphasis should be placed on these cost estimates as the assessment did not and could not determine the costs of structures and components whose detailed design requires extensive investigation.

15 Cost estimates for wave-power generation made by other studies and investigations in the past have been converted to today's prices. Where possible these have been converted to unity load factor to yield a range of capital cost of £300-600/kW.

16 In considering the development of wave power in the UK some of the possible reasons for making provision for an alternative and preferably inexhaustible source of energy have been indicated.

17 Having considered the alternative sources of energy available in the UK, wave power appears to be more attractive than wind or tidal power. Wave power has the attraction of not requiring the very large single investments which tidal power would require.

18 In examining the potential of wave power to satisfy the demands of an alternative power source it is considered that large-scale production of energy is technically feasible and could be achieved by the development of existing technology.

19 The estimates produced by this study and others indicate that wave-generated electricity is likely to be more expensive than nuclear-generated electricity but possibly by no more than a factor of 3, not by an order of magnitude. Other considerations, changes in circumstance and optimised design could result in the costs of wave-generated power becoming acceptable.

20 The construction of wave-power stations would be able to utilise the manufacturing technology and facilities which continue to be developed for exploration and production of oil in UK waters. Production of wave-power stations would however compete for resources if it were to be undertaken on any significant scale before the demand for oil platforms and equipment slows down. If on the other hand the two programmes were inter-phased there is a possibility of prolonging the life of the offshore engineering activities in the UK.

21 There is a current trend for industry (power generation, chemical and mineral processing) and other activities to be moving into the offshore environment. Wave-power generation must be viewed in this context and opportunities will arise to make multiple use of floating platforms thus radically improving the credibility and economics of wave-power generation.

22 The various options for the further development of wave power have been presented in terms of low, medium and high profile responses.

7 RECOMMENDATIONS

1 It is considered that the UK should maintain an interest in the development of power generation from sea-wave energy.

2 Liaison should be established and maintained between all centres in the UK and elsewhere, which are concerned with the development and application of wave power.

3 The research programme on wave power at Edinburgh University should receive continuing support within the terms already laid down.

4 Consideration should be given to a programme of work complementary to the Edinburgh programme to investigate means of converting oscillating mechanical motion into a usable form of energy.

5 Consideration should also be given to design/development studies of a system or systems other than that being developed at Edinburgh University. Systems based on the displacement of air to drive an air turbine are considered to be the most promising alternatives.

6 All competing wave-power schemes in the UK and abroad should be assessed against each other as further information becomes available. Wave-power schemes should be continually assessed against other alternative sources such as wind and tidal schemes.

7 The effect on specific sections of the coastline of installing particular configurations of wave-absorbing devices should be studied by experts competent in that field.

REFERENCES

1 HOGBEN, N. Sea state observation studies on the SS Cairndhu and RV Ernest Holt. NPL Ship Report No 32, August 1962.

2 HOGBEN, N. A study of voluntary observer ship data for the North Atlantic. NPL Ship Report No 33, August 1962.

3 EWING, J. A. and HOGBEN, N. A first look at some wave and wind data from trawlers. NPL Ship Report No 46, January 1964.

4 DRAPER, L. and FRICKER, H. S. Waves off Land's End. Journal of the Institute of Navigation, <u>18</u>, 2, April 1965.

5 DRAPER, L. Waves at Morecambe Bay light vessel, Irish Sea. NIO Internal Report No A32, September 1968.

6 DRAPER, L. Waves at Smith's Knoll light vessel, North Sea. NIO Internal Report No A33, September 1968.

7 DRAPER, L. and GRAVES, R. Waves at Varne light vessel, Dover Strait. NIO Internal Report No A34, September 1968.

8 DRAPER, L. and BLAKEY, A. Waves at Mersey Bar light vessel. NIO Internal Report No A37, March 1969.

9 HOGBEN, N. Measured and visual wave data and wind observations from trawlers. NPL Ship Report No 134, April 1969.

10 DUTTON, M. J. Analysis of wave heights in the North Sea, 1965-68. London Weather Centre Memo No 10, April 1969.

11 DRAPER, L. and DRIVER, J. S. Winter waves in the Northern North Sea at 57°30' N 3°00' E recorded by MV Famita. NIO Internal Report No A48, August 1971.

12 DRAPER, L. Waves at North Carr light vessel, off Fife Ness. NIO Internal Report No A50, August 1971.

13 LONGUET-HIGGINS, M. S. Statistical analysis of a random moving surface. Phil. Trans. Roy. Soc. London 1957, A249, 321-387.

14 RICE, S. O. The mathematical analysis of random noise. Bell Syst. Techn. J. 1945, <u>23</u>, 282-332; <u>24</u>, 46-156.

15 LAMB, H. Hydrodynamics. Cambridge University Press, 1932, p 369.

16 MILNE-THOMSON, L. M. Theoretical hydrodynamics, 4th edition. MacMillan & Co Ltd, London 1960.

17 TUCKER, M. J. A shipborne wave recorder. Trans. Instn Nav. Archt. London 1956, <u>98</u>, 236-250.

18 SVERDRUP, H. V. and MUNK, W. H. Wind, sea and swell: theory of relations for forecasting. Tech. Report No 1. US Hydrographic Office (HO Publ. No 601), 1947.

19 TUCKER, M. J. Analysis of records of sea waves. Proc. Instn Civ. Engrs, 1963, <u>26</u>, 304-316.

20 CARTWRIGHT, D. E. and LONGUET-HIGGINS, M. S. The statistical distribution of the maxima of a random function. Proc. Roy. Soc., 1956, A237, 212-232.

21 DRAPER, L. The analysis and presentation of wave data - a plea for uniformity. Proc. 10th Conf. on Coastal Engineering, Tokyo, Chapters 1 and 2.

22 TUCKER, M. J. Simple measurement of wave records. Proc. Conf. Wave Recordings for Civ. Engrs, 1961 (NIO) 22-3.

23 DRAPER, L. The derivation of a 'design-wave' from instrumental measurements of sea waves. Proc. Instn Civ. Engrs, 1963, 26, 291-304.

24 HOGBEN, N. and LUMB, F. E. The presentation of wave data from voluntary observing ships. NPL Ship Report No 49, 1964.

25 HOGBEN, N. and LUMB, F. E. Ocean wave statistics. HM Stationery Office, London (1967).

26 DRAPER, L. and SQUIRE, E. M. Waves at Ocean Weather Ship India. J. Roy. Inst. Nav. Archt. 1967, 109, 85-93.

27 DRAPER, L. Extreme wave conditions in British and adjacent waters. Presented at 13th International Conference on Coastal Engineering, Vancouver, July 1972.

28 DARBYSHIRE, M. and DRAPER, L. Forecasting wind-generated sea waves. Engineering (London) 1963, 195, 482-484.

29 BRETSCHNEIDER, C. L. Forecasting relations for wave generation. Look Lab/Hawaii 1, 3, 31-34.

30 North Sea Oil and the Environment. A report to the Oil Development Council for Scotland, HMSO 1974.

31 North Sea Oil and Gas. Coastal Planning Guidelines. Scottish Development Department, 1974.

32 KING, C. A. M. Beaches and coasts. Edward Arnold, 1972.

33 STEERS, J. A. The Coastline of England and Wales. Cambridge University Press, 1964.

34 STEERS, J. A. The Coastline of Scotland. Cambridge University Press, 1973.

35 Underwater Handbook - Western approaches to the British Isles. Hydrographic Department MOD, London, 1970. (obtainable from Agents for the Sale of Admiralty Charts).

36 West of Scotland Pilot, Hydrographic Department, Admiralty, London, 1958. (obtainable from Agents for the Sale of Admiralty Charts).

37 Sea Fisheries Statistical Tables. HMSO, 1974.

38 Statistical News Letters. Conseil International pour l'Exploration de la Mer. Copenhagen.

39 HANSON, J. A. Open sea mariculture - perspectives, problems and prospects. Paper OTC 2085 Offshore Technology Conference, Dallas, Texas, 1974.

40 FLEMMING, N. C. Matrix presentation of conflicts of interest in the coastal area. Paper presented at the 2nd International Colloquium on Exploitation of the Oceans, Bordeaux, France, 1-4 October 1974.

41 HECKARD, J. M. and WOODFORD, D. L. Environmental studies for major offshore developments. Paper OTC 2097 Offshore Technology Conference, Dallas, Texas, 1974.

42 McKILLOP, A. Technological alternatives. New Scientist, 22 November 1973, p 549.

43 ANON. Ocean waves power electricity-producing facility. Machine Design, 21 February 1974, p 8.

44 LUND, C. H. Proposes motor to utilize ocean waves for power. Industry and Power, November 1944, p 65.

45 Energy Conservation - A Study by the Central Policy Review Staff. HMSO, 1974.

46 ZLOTKY, R. A. A concept for a remotely interrogated synoptic oceanographic data sampling buoy. Marine Sciences Instrumentation, 1962, Vol. 1, pp 80-87.

47 HOLMAR, J. Private communication.

48 WITTSTOCK, K. Private communication.

49 ROMANOSKY, P. L'Energie des Mers est-elle utilisable? Science et Vie, May 1950, pp 279-283.

50 British Patent No 1,099,977.

51 British Patent No 807,281.

52 PINARD, F. and SALA, R. L'utilisation de la force motrice des vagues et le système Pinard-Sala. Bulletin de la Société d'Eng. pour l'Industrie Nationale, February 1925, pp 119-134.

53 British Patent No 346,947.

54 British Patent No 1,316,950.

55 British Patent No 940,823.

56 YOSHIDA, T. and IZUMI, H. Sea-wave air turbine generator. 2nd International Ocean Development Conference, 1972. Preprints Vol. 2, pp 2053-2073.

57 MASUDA, Y. Study of wave activated generator and future view as an island power source. 2nd International Ocean Development Conference, 1972. Preprints Vol. 2, pp 2074-2090.

58 MASUDA, Y. Wave activated generator for robot weather buoy and other use. Paper presented at the International Colloquium on the Exploitation of the Oceans, March 1971, Bordeaux, France.

59 British Patent No 1,014,196.

60 McCORMICK, M. E. Analysis of a wave energy conversion buoy. Journal of Hydronautics, 1974, 8(3), 77-82.

61 ISAACS, J. D. and SEYMOUR, R. J. The ocean as a power resource. Intern. J. Environmental Studies, 1973, Vol. 4, pp 201-205.

62 ANON. An energetic life on the ocean waves. New Scientist, 21 June 1973, p 754.

63 ISAACS, J. D. and CASTEL, D. Wave-powered generator system. University of California Sea Grant Annual Report, 1971-72, p 83.

64 WICK, G. Wave powered generator. Sea Grant - U-California, March 1973, Vol. 1, No 1.

65 CASTEL, D. Wave powered generator. Interim Progress Report, November 1973, Scripps Institution of Oceanography, La Jolla, California.

66 HALLMAN, K. Svenskar uppfann kraftverk Vågornas ro̊relse ger energi. Svenska dagbladet Lördagen, 19 Jan. 1974.

67 SILVERS, J. P. Successful conversion of ocean wave energy. Mar. Tech. Soc. Buoy Technology Conference, March 1964, pp 279-305.

68 British Patent No 456, 672.

69 US Patent No 3,603,804.

70 US Patent No 3,758,788.

71 British Patent No 681,639.

72 ANON. Self-winding generator harnesses ocean wave energy. Machine Design, 1964, 36(23), 8.

73 JONES, E. B. Wave Power (original Journal source not traced).

74 MAUJER, A. R. and VAN WINKLE, F. New wave motor of the float type. Power, Jan. 17 1911, pp 112-115.

75 US Patent No 1,604,632.

76 US Patent No 2,848,189.

77 WHITEHEAD, P. L. and CAZEL, H. A. Sea wave electric power system. IEEE, Engineering in the Ocean Environment Conference, 1971, pp 159-160.

78 WIEGEL, R. L. Oceanographical Engineering. Prentice Hall Inc., 1964, p 129.

79 MASUDA, Y. Study of wave activated generator for island power and land power. Paper BX 119, 2nd International Colloquium on Exploitation of the Oceans, 1-4 October 1974, Bordeaux, France.

80 DHAILLE, R. Technique et rentabilité des dièdres à houle. Houille Blanche (Section C), 1956, II, 421-431.

81 JACOBS, E. E. Power from ocean waves - another energy source? Power Engineering, 1956, 60(8), 82-84.

82 US Patent No 3,685,291.

83 PALME, A. Wave-motion turbine. Power, 1920, 52(18), 700-701.

84 British Patent No 741,494.

85 British Patent No 745,084.

86 SCOTT, M. K. Electricity from waves. Sea Frontiers, 1965, 11(4), 202-207.

87 KAYSER, H. Energy generation from sea waves. IEEE, Engineering in the Ocean Environment Conference, Halifax, Canada, Aug. 21-23, 1974, Vol. 1, pp 240-243.

88 KAYSER, H. Energieversorgung durch Wellengenerator (Energy supply by wave generator). Meerestech, 1974, 5(1), 29-31.

89 ANON. New concept for harnessing ocean waves. Ocean Industry, March 1970, pp 62-63.

90 McCORMICK, M. E. Ocean engineering wave mechanics. John Wiley & Sons Inc., 1973.

91 ANON. Sea wave power. Product Engineering, November 4, 1968, pp 52-53.

92 SALTER, S. H. Wave power. Nature, 1974, 249(5459), 720-724.

93 SAVONIUS, S. J. The S-rotor and its applications. Mechanical Engineering, 1931, 53(5), 333-338.

94 US Patent No 3,149,667.

95 PARENTY, H. and VANDAMME, G. Utilisation de la force des marées et du choc des vagues de la mer. Compte Rendus de l'Académie des Sciences, 1920, 171, 896-898.

96 SMITH, L. Wave power. Mechanical Engineering, 1927, 49(9), 995-998.

97 VINCENT, M. Reflexions sur l'utilisation future des energies naturelles. Librairie Fischbacher, Paris, 1924.

98 CHARLIER, R. H. Harnessing the energies of the oceans - a review. Part II, Mar. Technology Soc. J., 1969, 3(4), 59-81. (Part I in 3(3), 13-32.)

99 MONROE, F. F. A feasibility study of a wave-powered device for moving sand. Army Coastal Engineering Research Center, Washington, D.C. Miscellaneous Paper 3 67. 47P, Jun. 1967.

100 ANON. "Autobailer". Yachting Monthly. 1972, August, p 1169.

101 BARBER, N. F. and TUCKER, M. J. Wind waves. In The Sea, Vol. I. General editor M. N. Hill. Interscience Publishers, 1962.

102 The British Economy. Key Statistics 1900-1970. Times Newspapers Ltd.

103 Monthly Digest of Statistics No 345. September 1974, HMSO.

104 STODHART, A. H. The utilisation of wind power in the UK. Paper No 5, Re-assessing Energy Sources Symposium, 30-31 January 1974, Birniehill Institute, National Engineering Laboratory, East Kilbride, Glasgow.

105 HERONEMUS, W. H. Power from offshore winds. Proc. 8th Annual Marine Technology Society Conference, 1973, pp 435-466.

106 Financial Times. 4 July 1974, p 19.

107 Financial Times, 20 November 1974, p 11.

108 DEAN, R. G. et al. Model studies to evaluate an offshore nuclear power plant design. Paper No OTC 1986, Offshore Technology Conference, Dallas, USA, 1974.

109 New Scientist. 25 April 1974, p 173.

110 GORDON, H. S. Offshore industry ahoy! Chemical Engineering, Albany, July 23 1973, pp 62-66.

111 Financial Times. 22 October 1974, p 9.

112 SALTER, R. A floating power platform concept for the west coast. Rand Corporation Staff Paper, P-4939, December 1972.

113 GREEN, J. A self-contained oceanic resources base. Marine Technology Soc. Jl, 1970, 4(5), 88-102.

114 Viscount CALDECOTE. Future technology for marine minerals. New Scientist, 25 October 1973, pp 246-250.

LIST OF TABLES

LIST OF FIGURES

APPENDIX I

ANALYSIS OF WORLD WIDE OCEAN WAVE STATISTICS

Data Source: Hogben & Lumb, Ocean Wave Statistics HMSO 1967

For a number of reasons the wave periods and wave heights reported by voluntary observing ships differ from those measured by ocean weather ships. In this analysis of the statistics to produce energy figures an adjustment was made to the wave height data to compensate for this difference but no adjustment was made to the wave period.

The energy in each wave period band was calculated separately and the total summed. Not adjusting the wave period will result in an underestimate of the total energy present in the waves. With waves in the 5.5-7.5 second band the energy will be underestimated by only about 13 per cent whereas in the 7.5-9.5 second band the estimate of wave energy from this analysis would need to be increased by about 83 per cent. At longer wave lengths the voluntary observing ships tend to overestimate the energy present, such that in the 9.5-11.5 second band the quantity of energy would have to be reduced by about 23 per cent. Using these figures the annual energy density for areas 2 and 4 comes to 61 and 38 kW/m respectively whereas the measurements made at specific locations within these areas lead to figures of 80 and 44 kW/m respectively. This suggests that the energy figures calculated for voluntary observing ships data are good enough for rough comparison purposes.

Equations used:

$$H_{ows} = 1.7 + 0.93H_{vos}$$

$$H_{\frac{1}{3}} = 1.23 + 0.44H_{ows}$$

$$T_{ows} = T_{vos}$$

$$T = 4.7 + 0.32T_{ows}$$

$$E = 0.49H_{\frac{1}{3}}^{2} \times \bar{T} \times N \times t_{e}$$

$$t_{c} = 8760/N_{tot}.$$

The quantity E was calculated for each entry in the tables given in Ocean Wave Statistics. The total yearly energy for each wave period code at various heights was calculated and a total energy sum derived. The analysis was undertaken for 'ALL SEASONS' and 'ALL DIRECTIONS' for Areas (2, 3, 4, 5, 6, 8, 9, 12, 13, 34, 45 and 48) and a seasonal and directional analysis was undertaken for Area 2. The calculation of the energy figures was programmed and carried out using NEL's Univac 1108 computer.

Notation:

H_{ows}	Wave height at ocean weather ship (m)
H_{vos}	Wave height at voluntary observing ship (½ m)
$H_{\frac{1}{3}}$	Significant wave height (m)
T_{ows}	Wave period at ocean weather ship (s)
T_{vos}	Wave period at voluntary observing ship (s)
$\bar{T}$	Average period
E	Yearly energy at one particular wave height and period (kW h/m)
N_{tot}	Total number of observations
N	Number of observations at one particular wave height and period
t_e	Equivalent duration of observations (h)

APPENDIX II

BRITISH PATENTS ON WAVE-POWERED DEVICES 1855-1973

1855-1908 Class 69 - 'Hydraulic Machinery'. Sub-classification: 'Wave Mills'.

Year(s)	Patent No(s)
1855	2541
1857	2765, 3060
1859	341
1860	139, 594
1861	1557
1862	654
1863	2288
1864	630, 2779
1865	3232
1866	126
1867	11, 266
1868	847
1869	346, 2632, 3680
1870	3117
1871	1083, 1883, 1958, 2866, 3190
1872	142, 452, 3031, 3761
1873	1361, 1706, 2583, 2807, 3735
1874	816, 2687, 3051, 3629
1875	308, 2890, 4148
1876	2011, 2286, 3585, 3956
1877	1794
1878	1557, 3016
1879	2713, 4640
1880	1382
1881	2983, 3563, 4192
1882	1659, 3827, 5276
1883	2274, 4187
1884	1528
1885	11,990, 15,085
1886	2049, 7298, 10,174, 11,636
1887	7247
1888	17,593
1889	15,696, 20,673
1890	8947, 15,748
1891	11,928, 12,587, 14,488, 19,140, 21,530, 21,531
1892	8051
1893	12,045, 13,212, 15,882, 15,943
1894	9451, 11,642, 13,152, 16,930, 22,628
1895	14,630, 16,650, 23,920
1896	8284, 20,972
1897	8218, 9016, 20,543, 24,064, 24,336
1898	225, 4311, 7555, 19,681, 21,403, 21,870
1899	5934, 6335, 6697, 9762, 10,444, 11,115, 13,281, 15,488, 19,999, 25,572
1900	863, 3322, 5465, 6260, 11,215, 12,463, 21,361
1901	12,339, 23,826, 26,613
1902	3257, 3714, 25,646
1903	2942, 3741, 4002, 8731, 13,986, 14,485, 18,773, 23,284, 28,484
1904	2371, 5386, 9359, 12,099, 12,343, 18,599, 27,050, 27,050A, 27,050B, 27,050C

Year(s)	Patent No(s)
1905	166, 3590, 5065, 12,436, 19,896, 25,494, 27,070
1906	2999, 5058, 8184, 13,185, 21,340, 25,984, 26,812
1907	1668, 7173, 9106, 9279, 10,720, 16,891, 18,918, 19281, 21,266 27,313, 27,949, 28,037, 28,591
1908	3673, 8739, 11,437, 12,573, 14,532, 14,533, 14,778, 19,608

1909 Change of classification to: Class 69(1) 'Hydraulic Machinery'.
Sub-classification: 'Wave and Tide Energy Utilizing'.

Note In the patents from 1909-1925 no division is made between wave and tidal machines. The following patents therefore include purely tidal devices as well as devices which derive their power purely from wave action and also devices which can utilize either tidal or wave movements or a combination of both.

Year(s)	Patent No(s)
1909	956, 2854, 3164, 3844, 8116, 11,716, 22,015, 22,725, 28,592
1910	8283, 20,161, 21,336, 25,318, 25,833, 27,708
1911	7087, 9231, 12,232, 16,372, 19,115, 19,128, 21,239, 27,049, 28,952
1912	8857, 9040, 11,731, 17,595, 18,101, 28,343, 28,982
1913	1226, 1625, 4994, 5788, 12,259, 15,279, 16,106, 24,018, 28,014, 29,887
1914	139, 1544, 3691, 8503, 16511, 18051, 19,948, 20,415
1915	12,354, 12355
1916-20	100,461, 101,916, 102,980, 104,157, 106, 027, 109,353, 112,554 116,372, 117,340, 118,989, 121,386, 121,831, 122,229, 122,706 125,226, 126,573, 127,154, 128,399, 132,313, 136,733, 136,952, 138,590, 139,319, 140,573, 144,358, 146,611, 147,720, 148,357, 150,264, 152,360, 152,484, 154,054, 154,188
1921-25	156,248, 156,315, 157,215, 158,048, 158,368, 158,661, 158,971, 161,295, 163,636, 165,789, 166,739, 167,777, 170,429, 171,104, 171,346, 172,078, 174,467, 174,505, 175,152, 175,928, 177,576, 181,744, 183,826, 185,515, 188,330, 188,812, 190,743, 191,239, 191,780, 193,146, 194,918, 196,017, 196,660, 197,002, 200,559 202,709, 203,435, 203,860, 205,846, 209,126, 209,598, 209,871, 210,228, 210,461, 213,492, 214,188, 218,102, 219,323, 223,374, 226,786, 228,513, 228,631, 228,914, 230,296, 235,508, 236,652, 237,807, 238,337, 241,760, 244,418

1926-1930

Note The patents from 1926-1963 were examined to determine whether their operational principle depends on wave action, tidal action or both. A (W) indicates a device based purely on wave derived energy, (T) a purely tidal device and (WT) a scheme which in theory is dependent only on a variation in level and can operate from wave or tidal movements. An (I) has been used where the principle of operation could not be easily determined from the relevant abridgement.

1926-30	264,772W, 265,094W, 266,621I, 267,387WT, 267,945T, 269,316T, 273,219T, 275,115T, 277,007W, 277,888W, 283,327T, 283,607T, 291,265W, 292,314W, 292,906T, 293,925W, 296,330I, 297,288W, 297,569WT, 297,720W, 301,264W, 302,546WT, 305,477T, 307,681W, 336,209I

1931 Change of classification to: Group XXIX Sub-classification: 'Wave and Tide Energy Utilizing'.

Year(s)	Patent No(s)
1931	344,374I, 346,947W, 348,672I, 349,103I, 349,260T
1932-33	384,603W, 384,844WT, 385,909W, 386,818W, 398,280W
1934-35	424,881W
1935-37	456,672W
1937-38	464,317WT
1938-39	487,850T
1939-40	511,809T, 519,155W
1940-41	525,069W, 530,898TI
1941-44	541,775W, 557,049W
1944-46	562,285W, 566,396W, 566,691W
1946-48	590,196W, 590,331T
1948-49	612,175W, 613,159W, 613,160W
1949-50	628,278W, 628,422W, 633,983W, 636,003T
1950-51	655,987W
1951-52	677,186W
1952-53	681,639W
1953-54	710,685T, 717,112T
1954-55	734,294W
1955-56	741,494W, 745,084W, 750,602T, 757,686W
1956-57	Nil
1957-58	789,044WT
1958-59	801,263W, 801,264W, 801,984W, 807,281W, 810,405T
1959-60	826,431W, 831,518T
1960	845,110W, 857,242T
1960-61	Nil
1961-62	883,813W
1962-63	905,446W, 914,997W
1963	Nil

1963 Change of classification to F1 S28, 'Prime Movers, Utilizing Wave and Tide Energy'.

Note Patents from 1963 to 1973 were examined to separate wave powered devices from tidal; only those operating on wave power are listed below.

1963-64	940,823, 954,962
1964	Nil
1965	989,640
1965-66	1,014,196, 1,024,536
1966	Nil
1966-67	Nil
1967-68	1,099,977
1968	1,116,689
1968-69	1,130,107
1969	Nil
1969-70	1,176,559
1970-71	Nil
1971	Nil
1971-72	1,255,215
1972	Nil
1972-73	Nil

Note In the above list of patents the years referred to are the years indicated on the volumes of patent abridgements. This is not necessarily the data ascribed to the patent.

APPENDIX III

ORGANISATIONS CURRENTLY INVOLVED IN THE STUDY OR APPLICATION OF WAVE POWER

United Kingdom		
	Organisation	Activity
1	Department of Energy, ENT Division	Undertook preliminary survey on wave power commissioned further study by NEL
2	Department of Industry, National Engineering Laboratory	This study
3	Central Electricity Generating Board, Marchwood Laboratories	Assessment/development involving experimental work commenced mid 1974
4	Department of Industry, National Physical Laboratory, Ship Division	Have investigated the principle of wave-powered buoy operation and undertaken exploratory work on own designs of wave-powered generators
5	Trinity House Lighthouse Service	Have investigated wave-powered buoys in conjunction with Commissioner of Irish Lights and have had experimental work carried out by NPL
6	Sumitomi Shoji Kaisha Ltd	UK agents for wave-powered devices manufactured by the Ryokuseisha Corporation of Japan
7	Crown agents	Crown agents in conjunction with Hydraulics Research Station are currently considering the re-examination of a shoaling wave scheme for the Central Electricity Board of Mauritius. Model tests were carried out by Hydraulics Research Station during an earlier assessment
8	University of Edinburgh Department of Mechanical Engineering	Novel design of wave-powered generator developed and limited small-scale testing undertaken. Further experimental work funded by the Mechanical Engineering and Machine Tool Requirements Board commenced. Duration 3 years. Total cost £60,000. To be monitored by NEL

ORGANISATIONS CURRENTLY INVOLVED IN THE STUDY OR APPLICATION OF WAVE POWER (contd)

United Kingdom	Organisation	Activity
9	University College of North Wales, Bangor, Wales	Development of linear generator for generating electricity from oscillating motion such as sea waves.
10	Wave Power Ltd	Company formed to exploit wave power. Experimental work has been undertaken by British Hovercraft Corporation, Cowes
11	Queens University, Belfast, Department of Electrical and Electronic Engineering	Experimental and theoretical studies aimed at medium power range applications.
12	Electrical Research Association	The Association are interested in the direct generation of electricity from wave actuated motion and its utilisation in electro-chemical processes
13	Floating Breakwaters Ltd	Are concerned with designing devices to dissipate wave energy rather than convert it into useable power
USA		
1	Scripps Institute of Oceanography, California	Continuing development of wave-powered generator
2	US Naval Academy, Annapolis	Theoretical study of wave energy conversion buoy published 1974

ORGANISATIONS CURRENTLY INVOLVED IN THE STUDY OR APPLICATION OF WAVE POWER (contd)

German Federal Republic

	Organisation	Activity
1	Bundesministerium für Forschung und Technologie (Bm FT)	Currently sponsoring study of wave power
2	Deutsche Hydrographisches Institut	
3	Gesellschaft für Kernenergieverwertung in Schiffbau und Schiffart (GKSS)	DHI and GKSS undertook preliminary look at wave power
4	Kernforschungsanlage (KFA) GmbH, Julich	Current study of wave power
5	Dornier System, Friedrichshafen	Undertaking wave power study under contract to KFA

ORGANISATIONS CURRENTLY INVOLVED IN THE STUDY OR APPLICATION OF WAVE POWER (contd)

	Organisation	Activity
France		
1	Centre National pour l'Exploitation des Oceans CNEXO, Paris	Reviewing wave power devices
Finland		
1	University of Helsinki	Known to be studying wave-powered device.
Sweden		
1	ASEA	Feasibility studies undertaken - no further work comtemplated
2	Telelarm Mobil Telefon AB, Stockholm	Concept proposed. No details known.
3	Fagersta AB, Fagersta, Stockholm	Development of wave-powered system. Models have been tested

ORGANISATIONS CURRENTLY INVOLVED IN THE STUDY OR APPLICATION OF WAVE POWER (contd)

Japan	Organisation	Activity
1	Oceanographic Unit, Japanese Defence Agency, Tokyo	Masuda has been working on wave power since 1945 and his ideas have given rise to wave-power buoys manufactured by (2) and fixed schemes being studied by (3)
2	Ryokuseisha Corporation, Tokyo	The corporation manufactures wave-activated generator modules for buoys, lighthouses etc. British patent No 1,1014,196
3	Takenaka Komuten, Tokyo	Plans to build 100 KW fixed type for Okinawa Electric Power Corporation in 1974 were delayed. Detailed studies have been made at Tokai University.
4	The Japan Marine Science and Technology Centre, Yokosuka	a Study being undertaken to assess wave power b Study of Masuda's ring buoy concept
5	Ministry of Transportation Agency, Tokyo	
6	Mitsubishi	Re-examing Masuda's work in company's laboratories
7	Mitsui	UK representatives have visited Salter in Edinburgh. Indicated that a number of Japanese companies are studying wave power
8	Keidanren	Engineering Committee on Ocean Resources has been established to look at wave power generation and utilisation of temperature differential etc

APPENDIX IV

ORGANISATIONS CONSULTED OR RESPONDED TO IN THE COURSE OF THIS STUDY

AERE, Harwell

BICC Ltd

BSRA

BBC

Central Office of Information

CEGB, Marchwood Laboratories

Central Policy Review Staff, Cabinet Office

Crown Agents

CIRIA

Centre National pour L'Exploitation des Oceans, Paris

Commissioner of Irish Lights, Dublin

Department of Energy: Petroleum Division; Energy Technology Division

Department of Industry: RR Division

Department of Trade: Marine Division

Dornier System GmbH, German Federal Republic

Electricity Council Research Centre

Electrical Research Association

Floating Breakwaters Ltd

Gifford and Partners

Geological Museum

Halifax Courier Ltd

Hydrographer of the Navy, Taunton

Institute of Oceanographic Sciences, Taunton

Institute of Oceanographic Sciences, Wormley

Institution of Electrical Engineers

J Y & G W Johnson - Chartered patent agents

Kernforschunganlage GmbH, German Federal Republic

AD Little Inc

Low Impact Technology Ltd

Ministry of Agriculture, Fisheries and Food: Fisheries Laboratory, Lowestoft; Fisheries Statistics Section, Great Westminster House

Sir Robert McAlpine & Sons Ltd

National Physical Laboratory

North of Scotland Hydro Electric Board

New Science Publications

Office of the Scientific Counsellor, British Embassy: Bonn, Washington, Moscow, Paris, Ottowa, Stockholm, Tokyo

Oceanographic Unit, Japan Defence Agency

Queens University, Belfast, Department of Electrical and Electronic Engineering

Scripps Institute of Oceanography, California

Stone-Platt Crawley Ltd

Sumitomi Shoji Kaisha Ltd

Taylor Woodrow Construction Ltd

Telelarm Mobil Telefon AB, Stockholm

Trinity House Lighthouse Service

University of Salford

University of Edinburgh: Department of Mechanical Engineering; Department of Electrical Engineering

Wilson, Gunn and Ellis

In addition, as a result of our involvement in this study being made known, we were contacted by a number of individuals, acting on their own behalf, with requests for information or requesting comment on their own designs of wave-powered generators.

TABLE 1

ABBREVIATIONS FOR WEATHER STATIONS IN FIGURE 7

B	Barrels L. V.	OWS	Ocean Weather Ship Stations, I and J
BAR	Bar L. V.	RS	Royal Sovereign
D	Dowsing L. V.	SB	Shambles
DT	Daunt L. V.	SK	Smith's Knoll L. V.
F	MV Famita	SS	Sevenstones L. V.
K	Kish Bank	T	Tongue L. V.
MB	Morecambe Bay	V	Varne L. V.
NC	North Carr L. V.	WB	West Bexington
O	Owers L. V.		

TABLE 2

ENERGY AVAILABLE AT A NUMER OF MEASURING STATIONS

Measuring station	Annual energy available kW h/m	Mean power output kW/m	50 year design wave m
North Carr L. V.	60,690	6.928	19
MV Famita	381,649	43.567	29
Mersey Bar L. V.	24,000	2.739	12
Smith's Knoll L. V.	38,661	4.413	17
Varne L. V.	39,329	4.490	13
Morecambe Bay	35,477	4.050	13
Ocean Weather Station 'India'	698,318	79.717	34
Sevenstones L. V.	239.097	27.294	26

TABLE 3

EFFECT OF DISTANCE ON ENERGY AVAILABILITY

Position of generation system	Potentially available			Available for use taking shipping routes into account				
	MW h × 10^{-6}	Miles	MW h/mile × 10^{-6}	MW h × 10^{-6}	Miles	Percentage of potential energy	Percentage of potential distance	MW h/mile × 10^{-6}
10 miles from coast	544.9	1703	0.32	252.0	506	46.3	29.7	0.498
20 miles from coast	670.0	1706	0.393	428.0	901	63.9	52.8	0.475
30 miles from coast	951.2	1666	0.571	736.9	1078	77.5	64.7	0.684
Variable	545.9	685	0.797	545.9	685	100.0	100.0	0.797

TABLE 4

CLASSIFICATION FIG. NO, ILLUSTRATION FIG. NO, AND REFERENCES FOR WAVE-POWER SCHEMES

Scheme number	Type	Classification Fig. No	Illustration Fig. No	Reference(s)
1	Float/sea bed connection	16	19	42-49
2	Float/drag plate connection	16	-	50, 51
3	Float/shore connection	16	-	52
4	Float/floating structure	16	20	53
5	Float/internal linear generator	16	21	54
6	Tail tube float/internal float	16	-	55
7	Tail tube float/air turbine	16	22, 23	56-60
8	Tail tube float/water turbine	16	24	61-65
9	Float/immersed rotor	16	25	66
10	Float/suspended pressure transducer	16	-	67
11	Rolling float/pendulum	16	26	56
12	Rolling float/fluid displacement	16	-	68
13	Rolling float/shore connection	16	27	69
14	Rolling float/other floats	16	28	57, 70-71
15	Combined motion float/ 'self-winding' mechanism	16	-	72
16	Combined motion float/sea bed connection	16	29	73, 74
17	Combined motion float/ shore connection	16	30	75-77
18	Combined motion float/ floating structure	16	-	-
19	Travelling wave chamber/ floating structure	17	31	79
20	Travelling wave chamber/ sea bed connection	17	32	79
21	Standing wave chamber/ elevated reservoir	17	33	80
22	Standing wave chamber/ shore station	17	34	81

TABLE 4 (contd)

Scheme number	Type	Classification Fig. No	Illustration Fig. No	Reference(s)
23	Standing wave chamber/ floating structure	17	35	82
24	Pipe connected air chamber/shore station	17	36	56, 83, 84
25	Submerged air chamber/ sea bed connection	17	37	-
26	Immersed pipe/water turbine	17	-	85
27	Diaphragm/tautline buoy	17	38	67, 87, 88
28	Diaphragm/sea bed structure	17	39	87, 89
29	Wave rectifier/marine craft	18	-	91
30	Oscillating vane/sea bed connection	18	40	-
31	Oscillating vane/floating structure	18	41	92
32	Horizontal rotor/axis normal to wave direction	18	-	93
33	Horizontal rotor/axis parallel to wave direction	18	-	-
34	Horizontal air chamber/ floating structure	18	-	94
35	Horizontal air chamber/ shore structure	18	-	95
36	Hydraulic ram/shore structure	18	-	96
37	Converging channel/direct water turbine	18	-	52
38	Converging channel/ elevated reservoir	18	42	61, 80, 97

TABLE 5

WAVE POWERED GENERATORS - SUMMARY OF DEVICES BUILT AND TESTED UP TO OCTOBER 1974

	Year	System	Power	Location	Organisation individual } concerned	Remarks	Ref
1	1910	Vertical bore hole in cliff oscillations in water level driving an air turbine	1 kW	Royan, nr Bordeaux, France	M Bochaux-Praceique	Supplied entire power and light for dwelling house	83
2	1911	Pier structure with floats using both vertical and horizontal motion	110 kW	Young's 'Million Dollar' Pier, Atlantic City, New Jersey, USA	US Wave Power Company	Power level claimed, but not substantiated on investigation	74
3	1920	Float system operating in a basin connected to sea	n.a.	Algiers, N Africa	M Fusenot	Feeble power level	49
4	1926	Not identified		Minou lighthouse, Brest, France	M Coyne	Discouraging results	98
5	Pre 1931	Savonius rotor	n.a.	Baltic Sea	J Savonius	Limited trials	93
6	Pre 1931	Savonius rotor operating pump	up to 7 kW	Musee Oceanographique Monaco	M Richards	Rotor driving double acting pumps lifting water to a height of 200 ft	93
7	1931	Heavy float rising and falling to operate pump		Musée Oceanographique Monaco	F Catlancao	Operated 10 years pumping water destroyed by heavy seas	49

n.a. = not available.

TABLE 5 (contd)

	Year	System	Power	Location	Organisation individual } concerned	Remarks	Ref
8	Pre 1944	Converging channels supplying a fore bay for a low head station	n.a.	i Pointe Pescade ii Sidi Ferruch Algeria	i Societe Mediterranéenne d'Energie Marine ii Societe Marocaine d'Etudes de la Houle et du Vent	Qualatative study with encouraging results	80
9	1944	Model of above	n.a.	-	Laboratoire Dauphinois Hydraulique	Technically successful concept but not economically viable	80
10	1947	Three float system	200 W	Japan	Y Masuda, Oceanographic Unit, Japanese Maritime Self-Defence Unit	Tests abandoned after device overturned by high wave.	57
11	1957-59	Hydraulic system	1 kW	Japan	Y Masuda	Test failed	57
12	1960-63	Air turbine-fixed system	500 W	i Kannonzaki, nr Yokosuka harbour, Japan ii Institute test tank	Masuda supported by R & D HQ of Japan Defence Agency		57
13	1962	Submerged buoy with diaphragm activated generator	0.25 W	Buzzard's Bay, Massachusetts	AVCO Corporation (RAD) Division	Tests carried in sheltered location with no effective swell. Diaphragm ruptured in hurricane	67, 68

n.a. = not available.

DEPARTMENT OF INDUSTRY
NATIONAL ENGINEERING LABORATORY

THE DEVELOPMENT OF WAVE POWER - A TECHNO ECONOMIC STUDY

A study of the development of wave power was undertaken by the National Engineering Laboratory for the Department of Energy and was reported to the Department in March 1975.

Because of the interest shown in wave power NEL has now made this study generally available in a single document which presents the material contained in the original two-part report.

The report, available direct from NEL, outlines the background to the study, describes how wave energy can be calculated and examines the potential for wave power around the coast of the United Kingdom using existing wave data. Seasonal and geographical distribution of energy is investigated and observational data is used to compare energy levels in other parts of the world.

Ideas for wave powered generators past and present are classified and reviewed and generators actually built and operated are described. Information is given on work that was being undertaken in the field at the time that the study was in progress.

The report outlines the criteria for selecting generator concepts and the subsequent selection of the "front runners". Cost estimates made over the years by others for wave power schemes are presented. A particular scheme is selected in the report for further costing to provide an estimate of the possible costs of electricity generated by this means.

The final section on the development of wave power in the UK indicates the possible needs for alternative power sources, examines which alternative sources of energy are available and whether there is a role for wave power generation in the UK. The various options for research and development are stated and the report concludes with a number of recommendations.

Economic Assessment Unit
National Engineering Laboratory
East Kilbride
Glasgow G75 0QU
Scotland

TABLE 5 (contd)

	Year	System	Power	Location	Organisation } concerned individual	Remarks	Ref
14	1963	Air turbine system in fixed pipe	n.a.	Nakaminato Rock, Pacific Ocean, Japan	Y Masuda supported by R & D HQ of Japan Defence Agency	Test safety of fixed air-turbine system in high waves	57
15	1963-65	Pendulum-type buoy	2-3 W	Japan	Nichiro Kogyo Kaisha Ltd Ryokuseisha Corporation funded by Foundation New Technique Development Corporation	Based on a suggestion and research of Y Masuda, was developed as a navigation buoy. Rejected because of sway effect on light	56
16	1964	'Ocean motion harness' operating on principle of self winding watch	n.a.	USA	Hamilton Watch Company Industrial and Military Products Division	Prototype weight 1 lb 3 in dia x 3 in high	72
17	1965-present	Air-turbine buoys	100 W	Japan, USA, UK	Invented by Y Masuda Patented and manufactured by Ryokuseisha Corporation UK agents: Sumitomi Shaji Kaisha Ltd	Over 300 buoys now in operation off Japan, USA, Canada, Persian Gulf, and British Isles, Tested by Irish Lights 1970	56
18	1966	Air turbine fixed system adapted to power lighthouse		Ashika-jima Lighthouse, Tokyo Bay, Japan	Customers: Japan Maritime Safety Board Suppliers: Ryokuseisha		56, 57
19	1967	Wave-powered device to move sand	n.a.	USA	Coastal Engineering Research Centre	Device found to be unsatisfactory	99
20	1970	Air turbine generator	500 W	Expo 1970, Osaka, Japan	Y Masuda		57

n.a. = not available.

TABLE 5 (contd)

	Year	System	Power	Location	Organisation individual concerned	Remarks	Ref
21	1970	Hydraulic pumping over pliable strips in concrete trough	n.a.	USA	Power Systems Company, Boston, Mass, USA	Small scale tests successfully made	89
22	1970	Bobbing buoy with direct generation of electricity from linear generator	Less than 1 W	UK exhibited at 1970 Lighthouse Conference	Invented and patented by University College of N Wales.	Manufacturers dropped development after tests gave very low output	-
23	1971-2	Investigation of new construction method for air-turbine fixed method	n.a.	Japan	Y Masuda. Japan Electric Machine Association		56
24	1970 - present	Wave pump device fitted to ship R V Ellen B Scripps	60 W (no turbine)	Tested off Point Conception, California, USA	i David Castell/Scripps Institute of Oceanography, La Jolla, California, USA ii Glosten Associates	First experiment July 1972 terminated because of pipe failure. Latest experiment reported July 1973 plagued by calm seas	61-65
25	1972 - present	Float with propellors on shaft	n.a.	Sweden	Fagersta A B, Sweden M Gustaffson, K J Loqvist	Experiments carried out on ½-m dia float	66
26	1973 - present	Oscillating vane device	Model	UK	S Salter, Department of Mechanical Engineering, Edinburgh University	Model tests have shown that 90 per cent conversion efficiency is possible	92
27	1973 - 1974	Model wave energy converter		USA	A D Little Inc. Test under contract for US firm	Device found to be of low efficiency	-

n.a. = not available.

TABLE 5 (contd)

	Year	System	Power	Location	Organisation Individual } concerned	Remarks	Ref
28	1974	Float with impeller on shaft	n.a.	UK	National Physical Laboratory	Subject of patent application through NRDC	-
29	1974	Various float devices	n.a.	UK	Wave Power Ltd		-
30	1972-present	Autobailer wave-powered bilge pump	0.025 gal/min	Sweden	Imported by Yachtex, Westcliffe-on-Sea	Commercially available	100

n.a. = not available.

TABLE 6

COSTS OF VARIOUS WAVE-POWER SYSTEMS (1974 PRICES)

System	System No	Original estimate by	Size of module (kW)	Capital cost (£/kW)	Production cost of electricity (p/kWh)	Equivalent plant load factor
Combined motion float/ sea-bed connection	(16)	US Wave Power Co (1911)	90	195	-	-
Combined motion float/ sea-bed connection	(16)	US Wave Power Co (1911)	'Commercial'	70	-	-
Standing wave chamber/ shore connection	(22)	Jacobs, AD Little (1956)	50,000	345(1)	-	-
Oscillating vane/sea-bed connection	(30)	Voysey and Elliott (1951)	20	280	0.4(2)	1.0
Float/sea-bed connection	(1)	Voysey and Elliott (1951)	12	175	0.6(3)	0.4
Float/sea-bed connection	(1)	Goodwin (1973)	50	260-335(4)	0.7-1.0(5)	0.55
Travelling wave chamber/ floating structure	(19)	Masuda (1974)	3,000	290	0.8(6)-1.0(7)	0.57
Travelling wave chamber/ sea-bed connection	(20)	Shinojaki	100	-	4-8(8)	-

Notes

1 50 per cent conversion efficiency
2 20 years' life at 10 per cent annuity
3 20 years for floats, 50 years for ballast at 10 per cent
4 Without provision for back-up
5 30 years' life at 10 per cent annuity
6 15 years' life annuity rate undetermined
7 30 years at 10 per cent annuity
8 Basis undetermined

TABLE 7

SUMMARY OF CONDITIONS AT SEVERAL MEASURING STATIONS

Observing station	Period T (secs)	Wavelength $L = \frac{gT^2}{2\pi}$ (ft)	Velocity $C = \frac{gT}{2\pi}$ (ft/s)	Mean wave height $\bar{H}$ (ft)	Mean wave period $\bar{T}$ (secs)	Mean wave length $L = \frac{g\bar{T}^2}{2\pi}$ (ft)	Mean wave velocity $\bar{C} = \frac{g\bar{T}}{2\pi}$ (ft/s)	$\frac{\bar{H}}{L}$
North Carr	3-10	46-512	15-151	2	5	128	26	0.015
Smith's Knoll	3-9	46-415	15-46	2	6	184	31	0.011
Varne	3-9	46-415	15-46	3	5	128	26	0.023
Morecambe Bay	2-9	21-415	10-46	2	4	82	21	0.024
'India'	7-13	251-866	36-37	8	9	415	46	0.019
Sevenstones	5-12	128-738	27-61	5	7	251	36	0.02

TABLE 8

COMPONENTS OF SUPERSTRUCTURE (ONE CHAMBER ONLY)

Item (see Fig. 46)	Dimension (ft)	Quantity	Total area of ⅝" plate (ft^2)	Estimated length of welding (ft)	Volume (ft^3)	Weight (at 485 lb/ft^3) (Tons)
A	65 x 60	1	3900	971.8	203.1	43.98
B	65 x 45	1	2925	728.8	152.3	32.99
	35 x 55 x 60 x 45	1	2083.5	519.1	108.5	23.50
	8 x 40	4	1280	318.9	66.7	14.43
	8 x 65	2	1040	259.1	54.2	11.73
C	65 x 25	1	1625	404.9	84.6	18.32
	65 x 20	1	1300	323.9	67.7	14.66
	65 x 12.5	1	812.5	202.4	42.3	9.16
D	65 x 12.5	1	812.5	202.4	42.3	9.16
	65 x 3	1	195	48.6	10.2	2.20
	65 x 8	1	520	129.6	27.1	5.86
E	65 x 10	4	2600	636.1	135.4	29.32
	65 x 15	2	1950	485.9	101.6	21.99
	holes 4 x 4	32	-512	-127.6	-26.7	-5.77
	10 x 15	1	150	37.4	7.8	1.69
F	65 x 50	1	3250	809.8	169.3	36.65
	65 x 52.4	1	3406	848.7	177.4	38.40
	65 x 8	1	520	129.6	27.1	5.86
	65 x 17	1	1105	275.3	57.6	12.46
Total/chamber =			28,872.5	7204.7	1508.4	326.59
Total for complete unit (80 x)			2,309,800	576,376	120,680	26,127.2

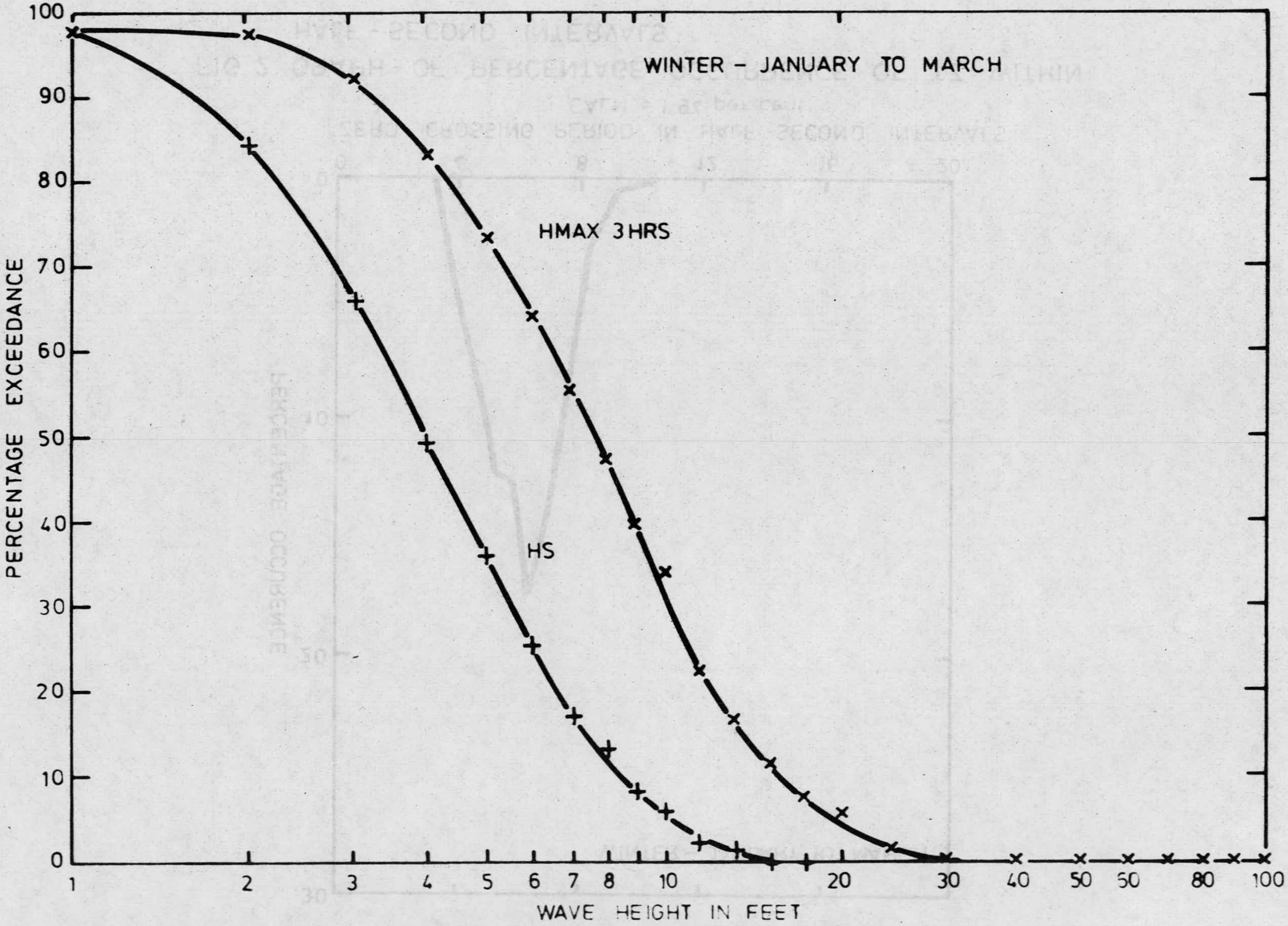

FIG 1 PERCENTAGE EXCEEDANCE OF HS AND HMAX

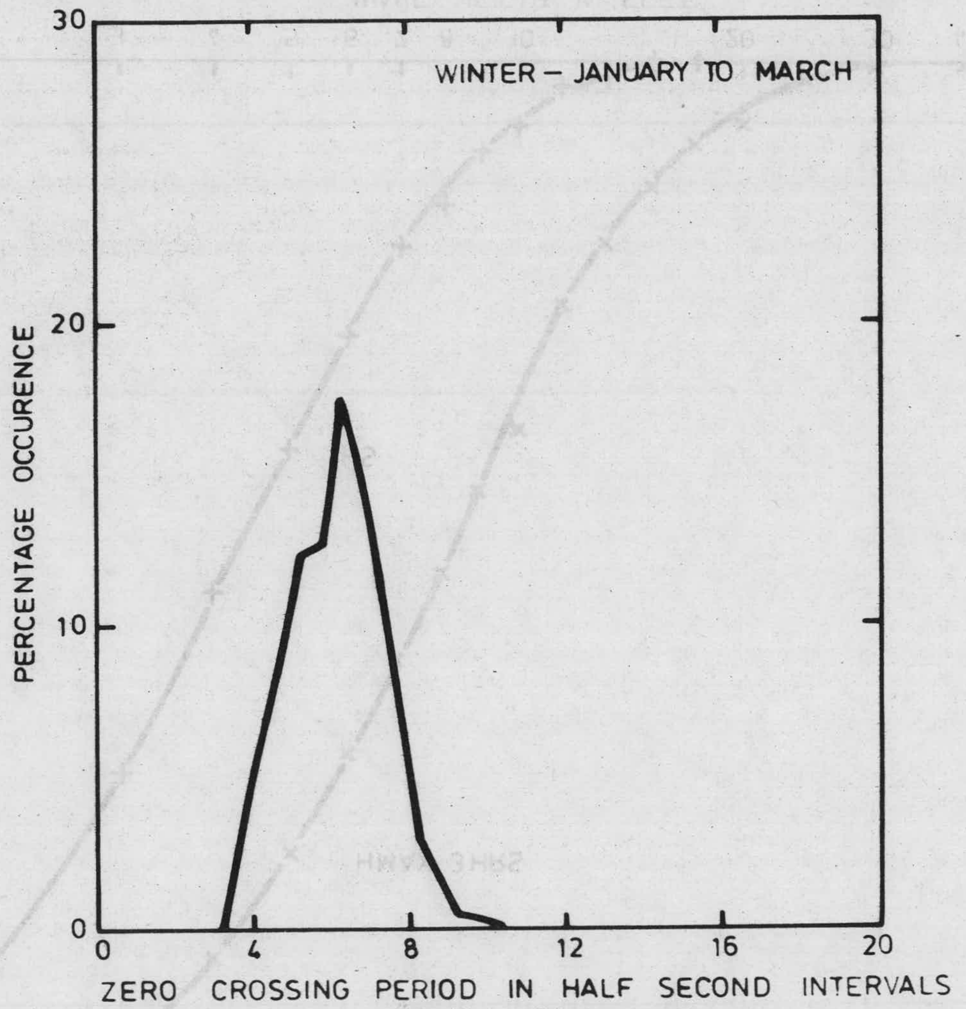

CALM = 1 94 per cent

FIG 2 GRAPH OF PERCENTAGE OCCURRENCE OF TZ WITHIN HALF-SECOND INTERVALS

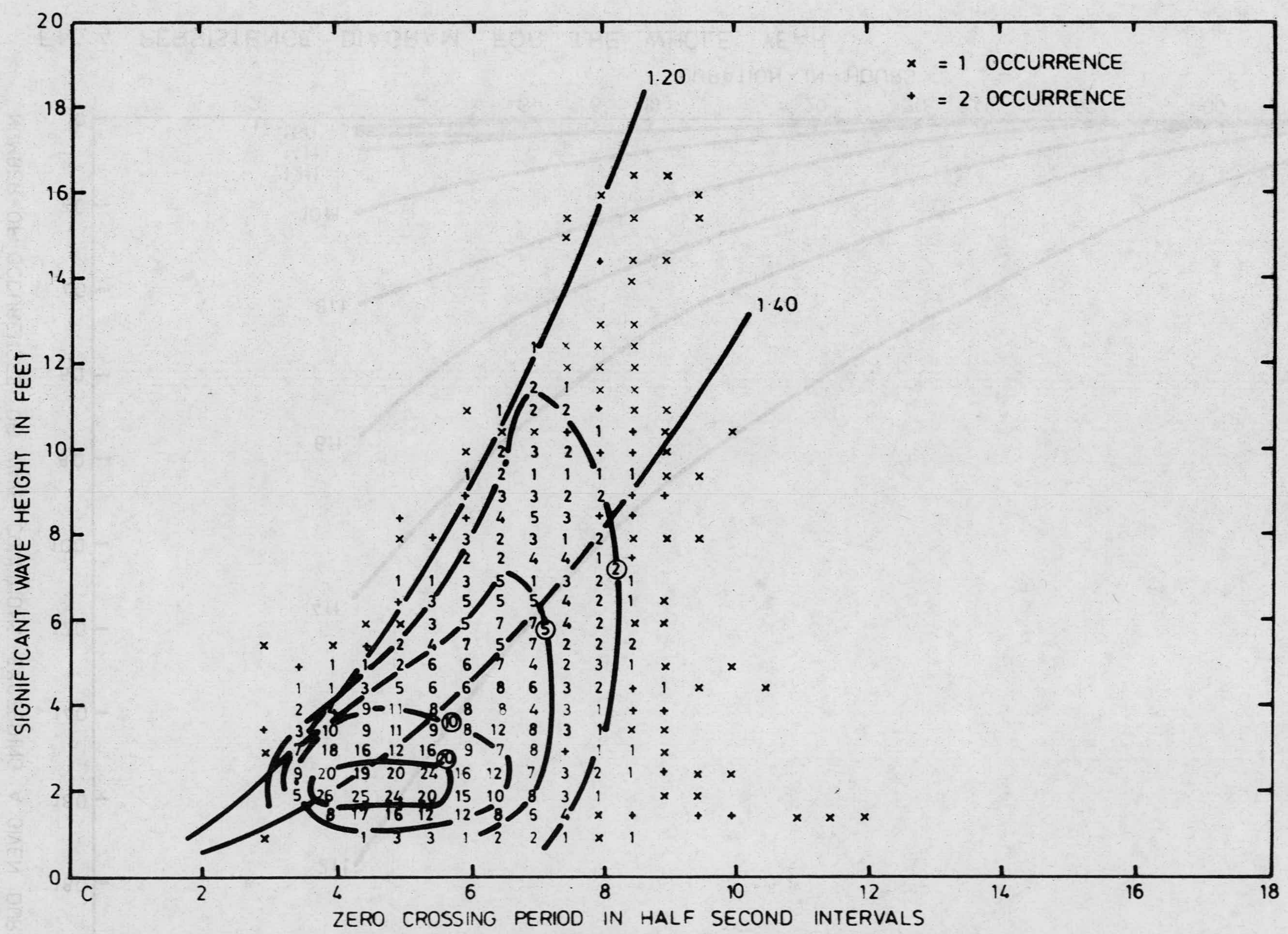

FIG 3 SCATTER DIAGRAM FOR THE WHOLE YEAR IN PARTS PER THOUSAND

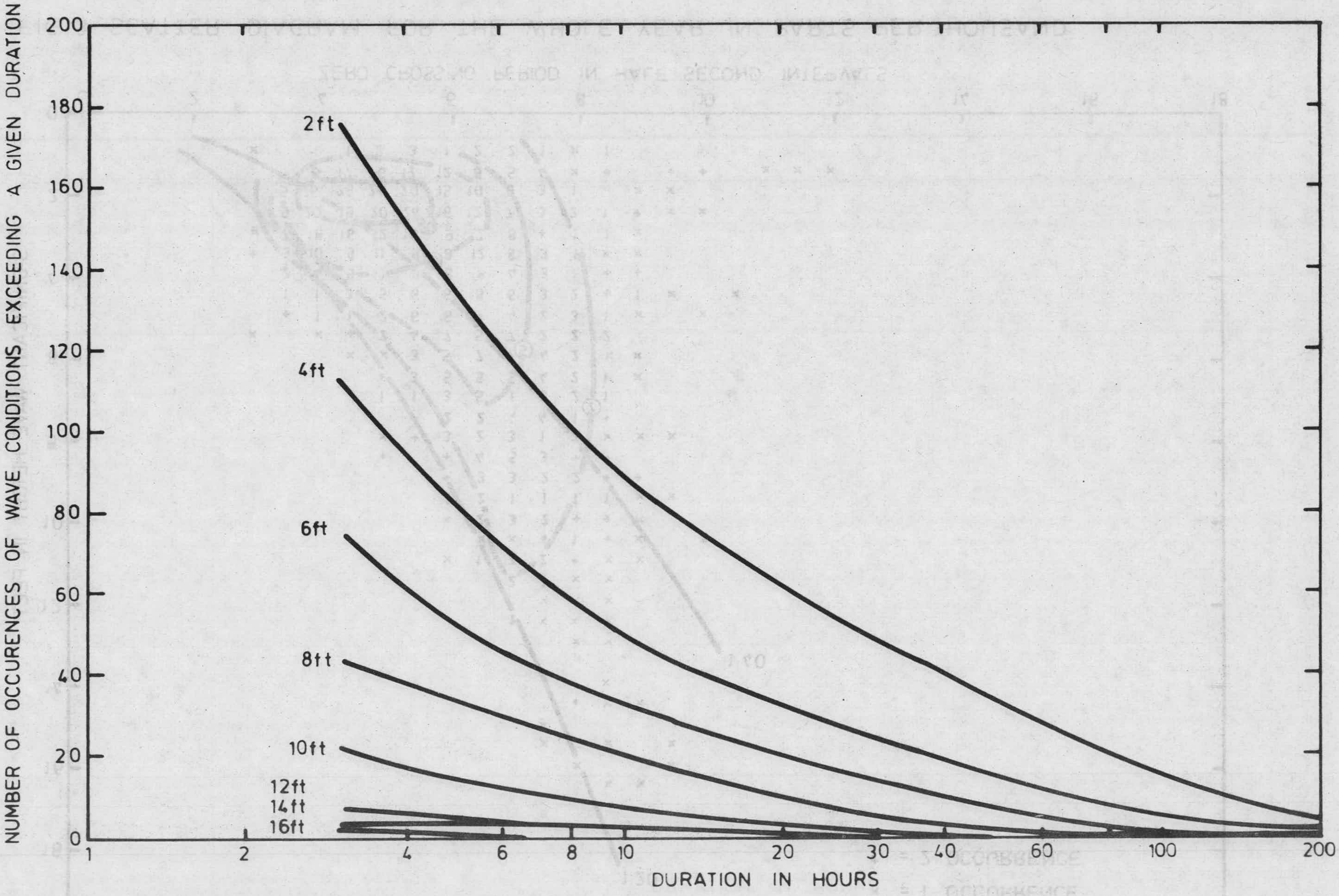

FIG 4 PERSISTENCE DIAGRAM FOR THE WHOLE YEAR

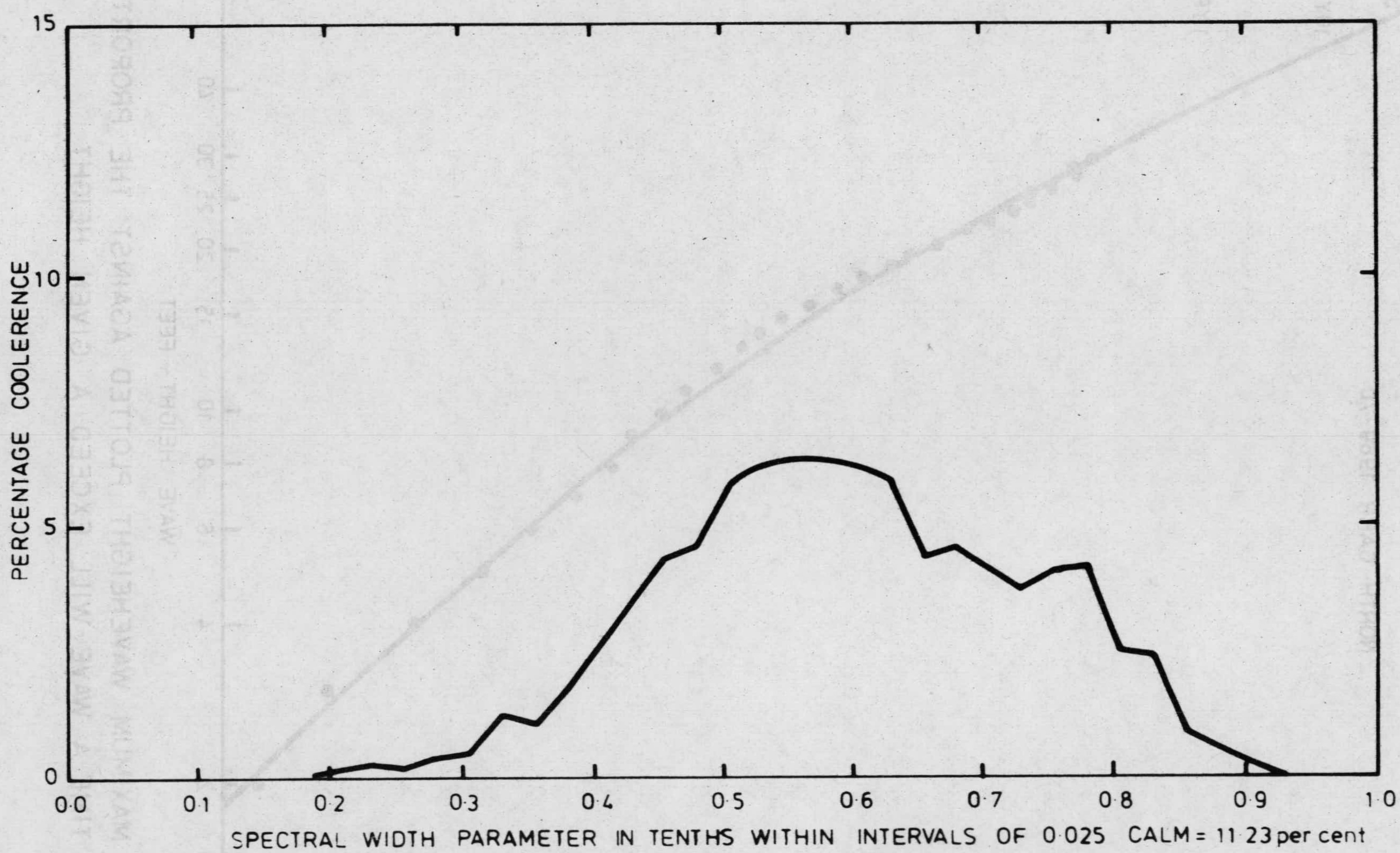

FIG 5 GRAPH OF SPECTRAL WIDTH PARAMETER FOR A WHOLE YEAR

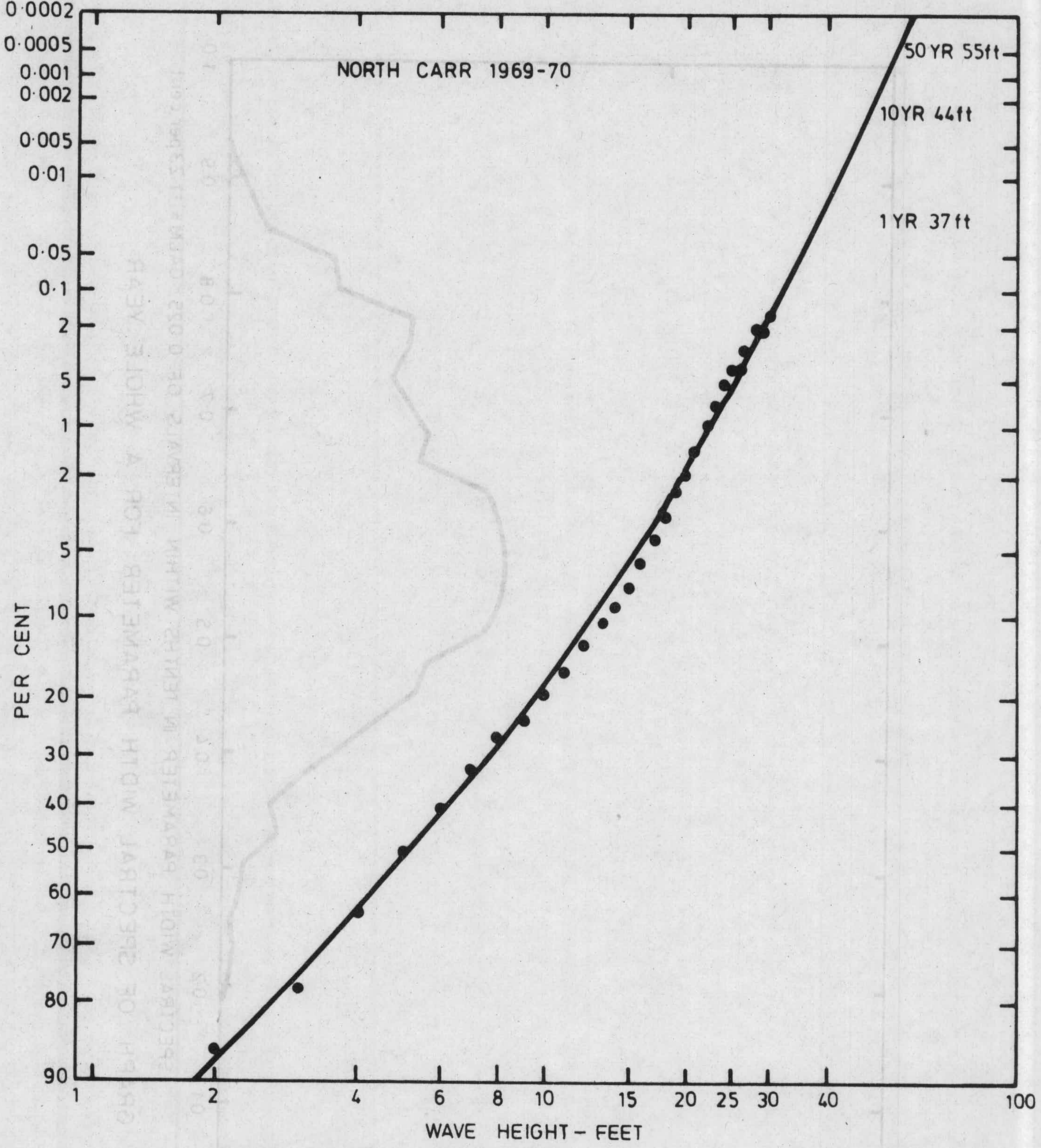

FIG 6 MAXIMUM WAVEHEIGHT PLOTTED AGAINST THE PROPORTION OF TIME A WAVE WILL EXCEED A GIVEN HEIGHT

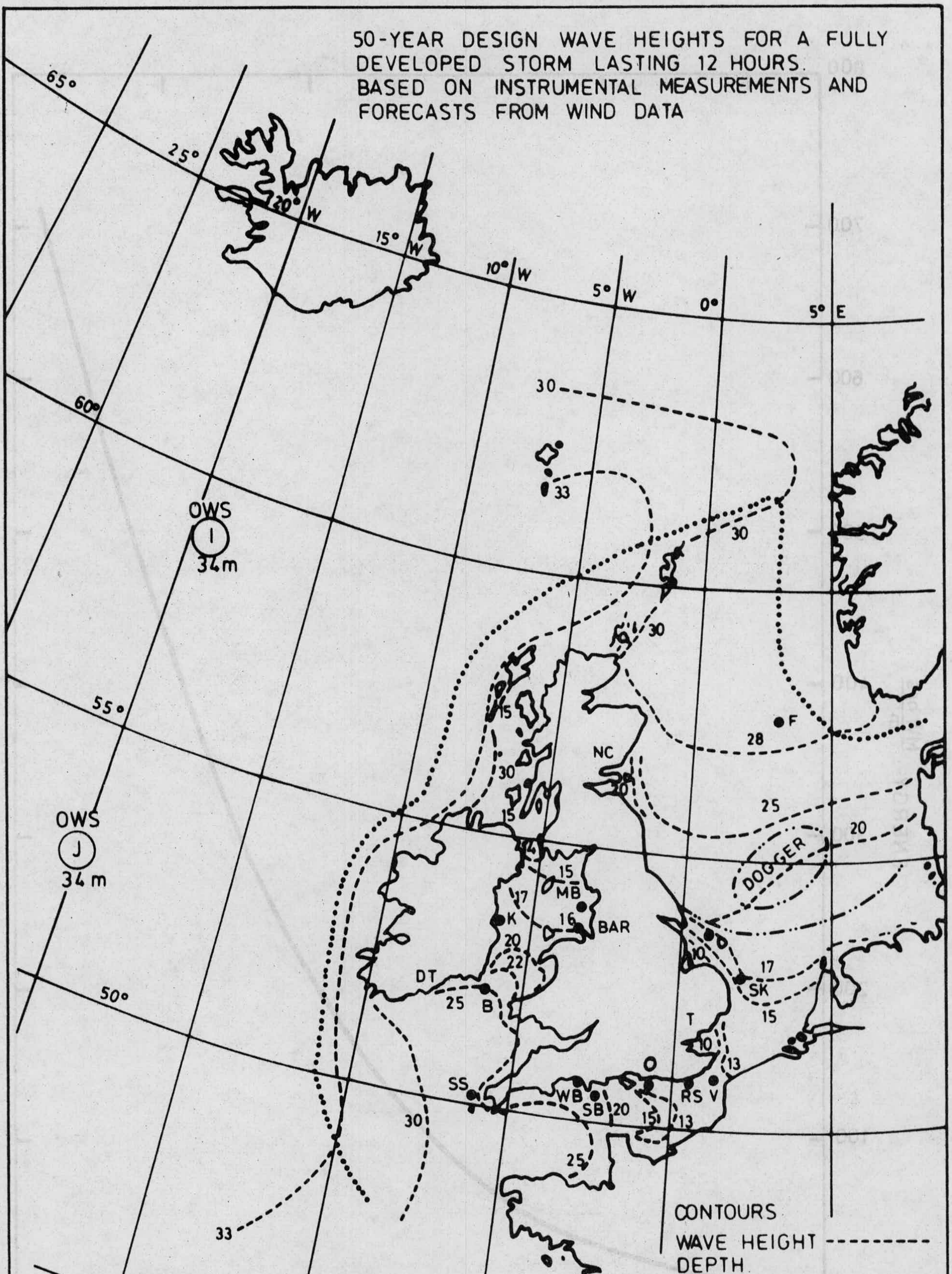

WAVE HEIGHTS IN METRES

FIG 7 THE MOST PROBABLE VALUE OF THE HEIGHT OF THE HIGHEST WAVE LIKELY TO OCCUR IN THE 50-YEAR STORM

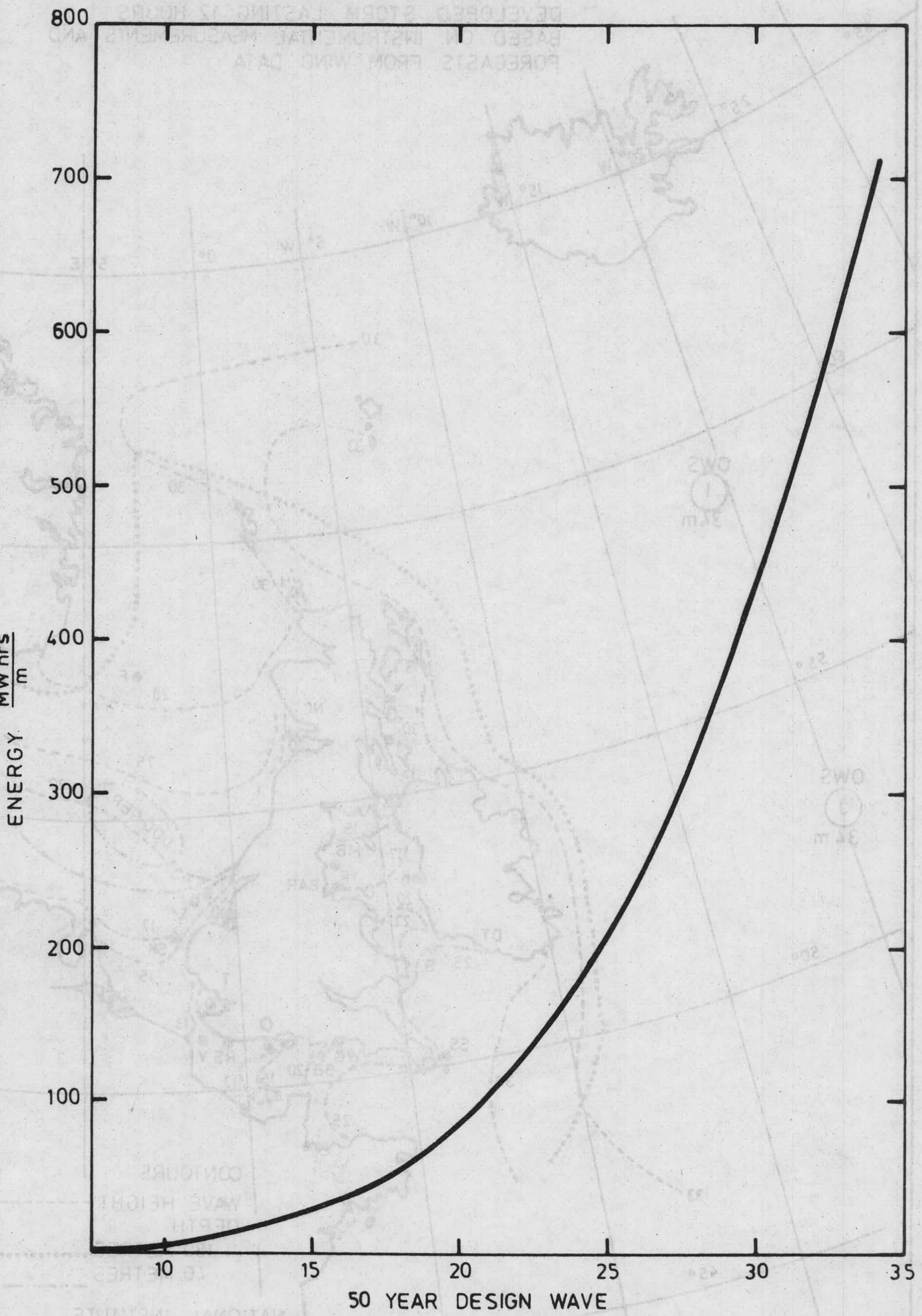

FIG 8 RELATIONSHIP BETWEEN 50 YEAR DESIGN WAVE AND ANNUAL ENERGY

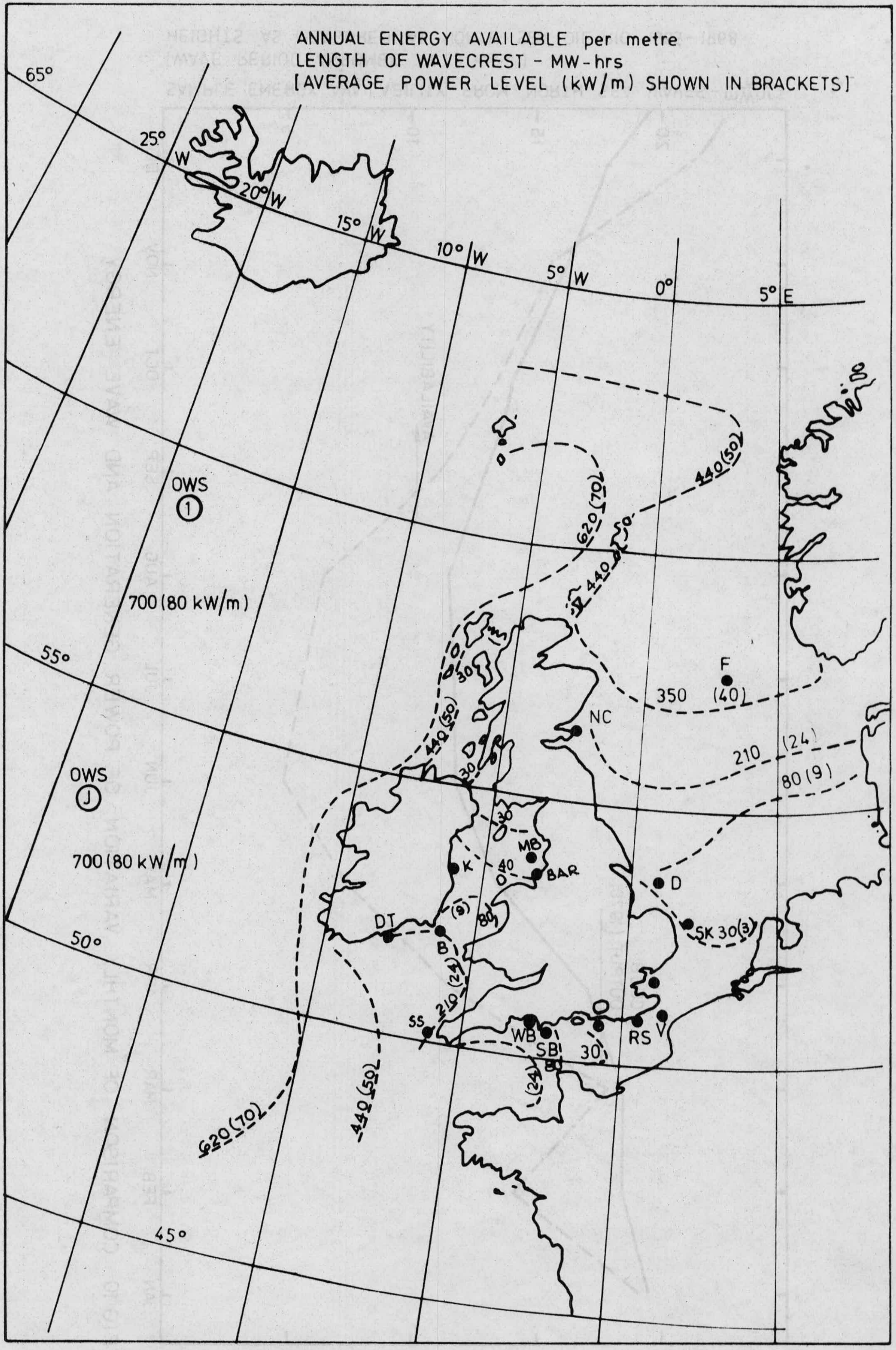

FIG 9 ANNUAL ENERGY AVAILABILITY IN BRITISH COASTAL WATER

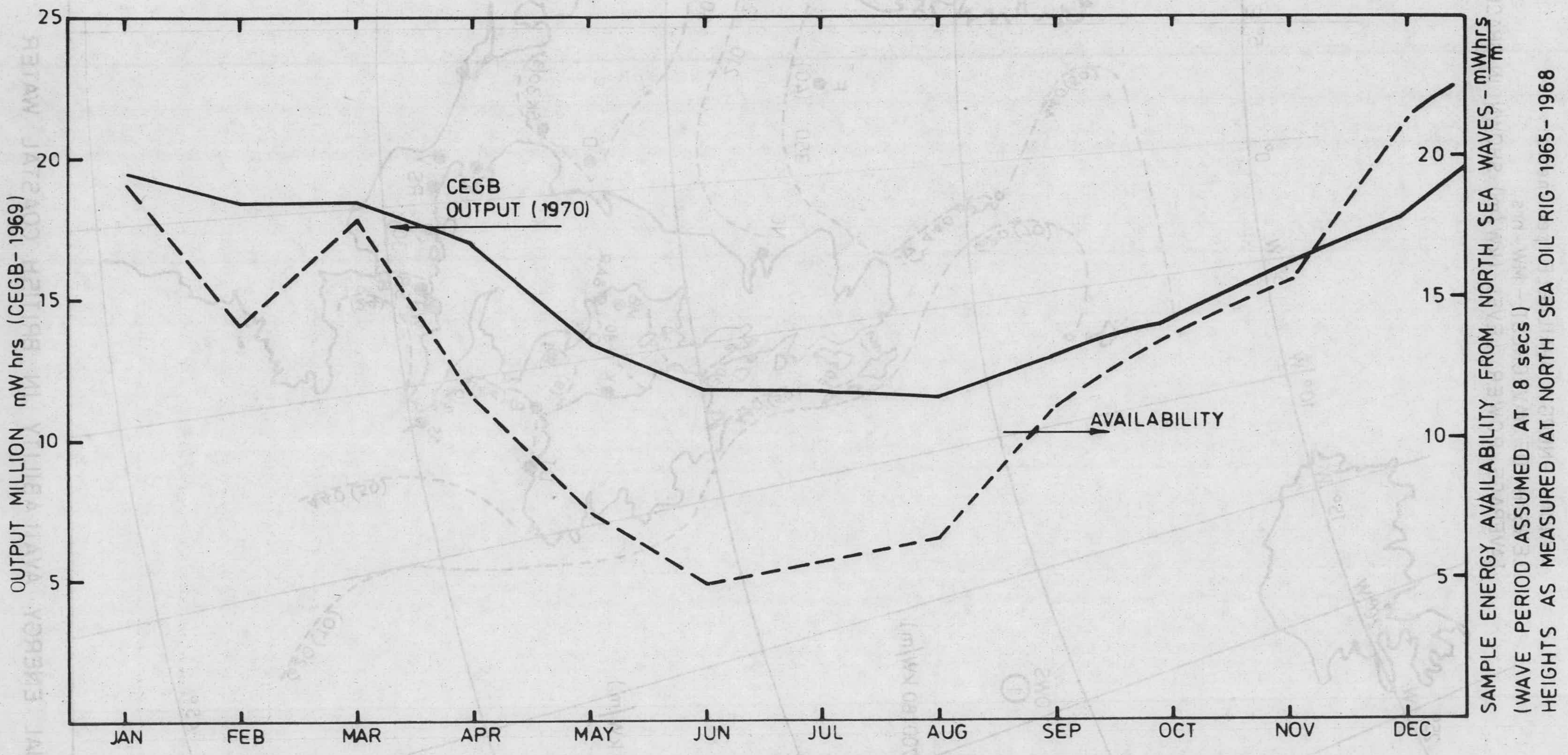

FIG 10 COMPARISON OF MONTHLY VARIATION OF POWER GENERATION AND WAVE ENERGY

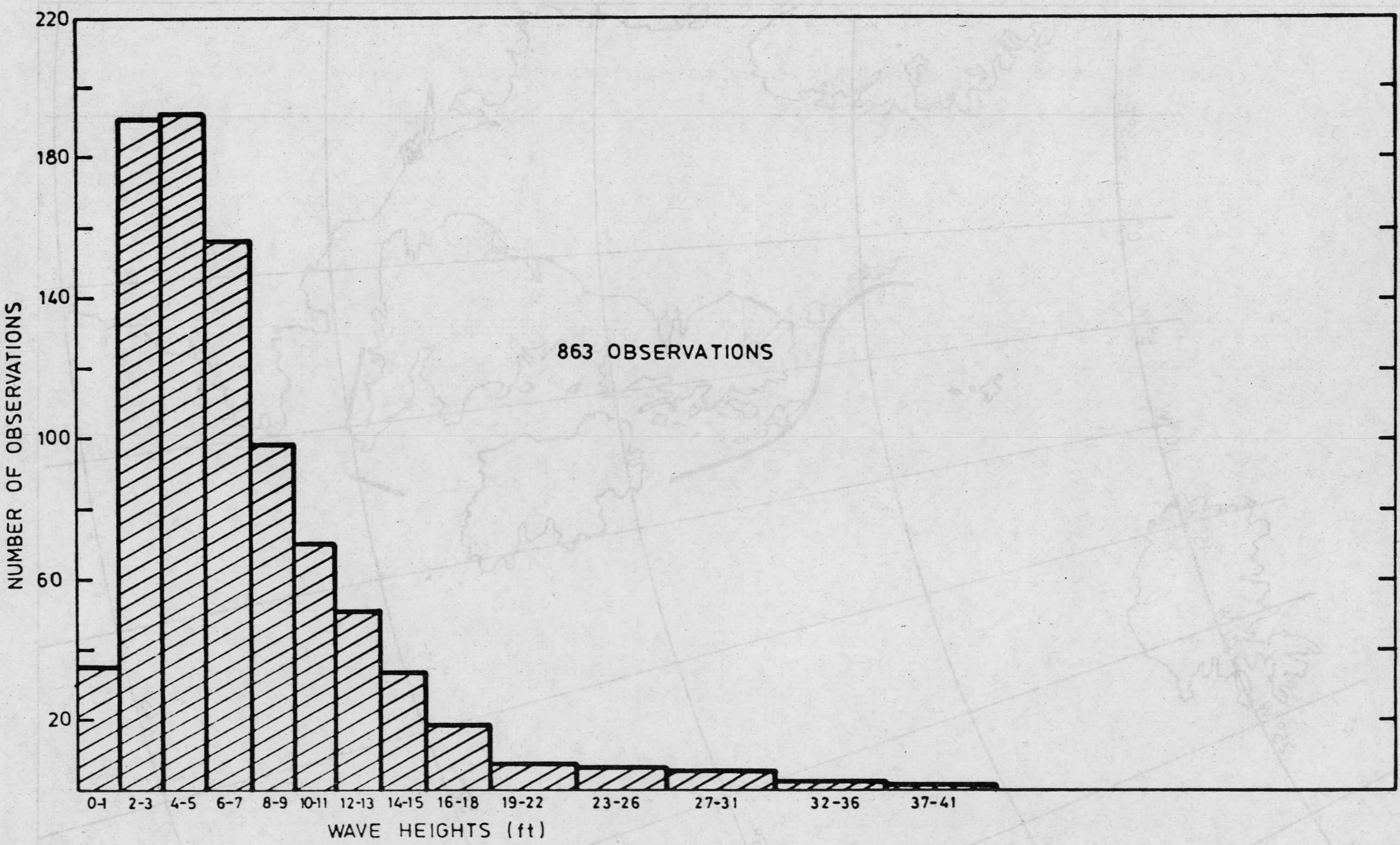

FIG 11 WAVE HEIGHTS OBSERVED DURING JANUARY 1965-68

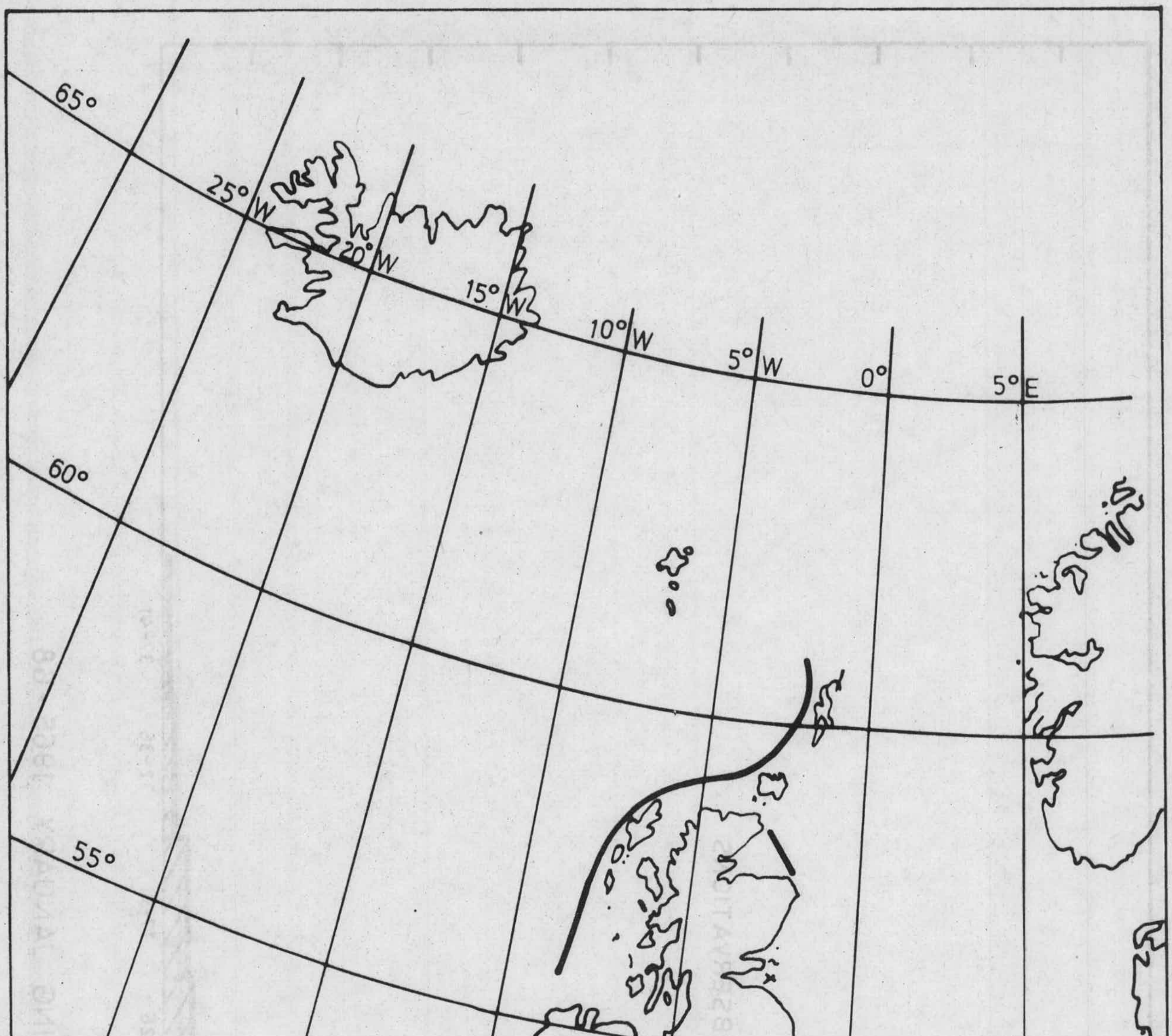

FIG 12 THE BEST AREAS FOR USE

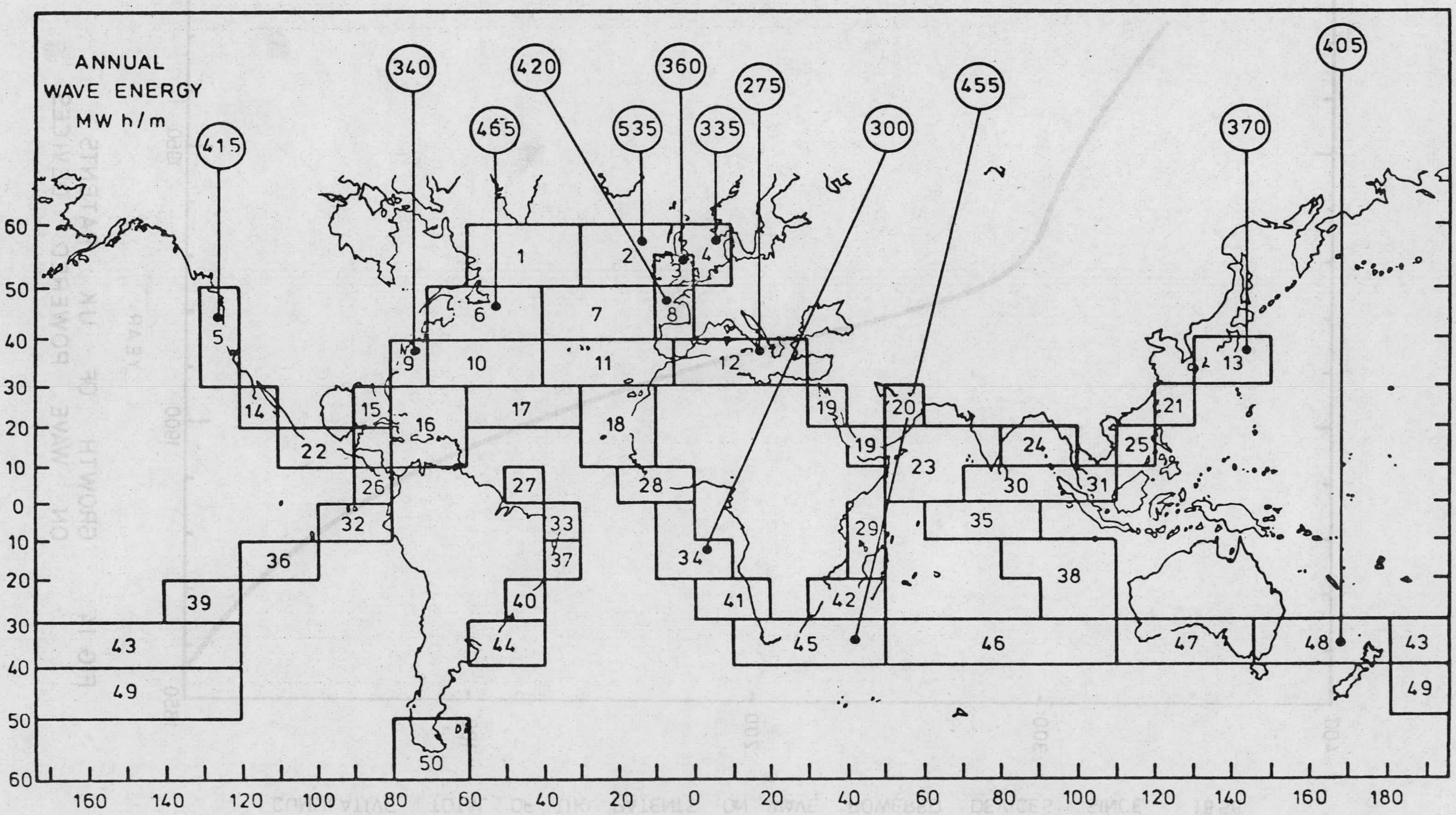

FIG 13 ANNUAL WAVE ENERGY IN SPECIFIC SEA AREAS (BASED ON MARSDEN SQUARE GROUPINGS)

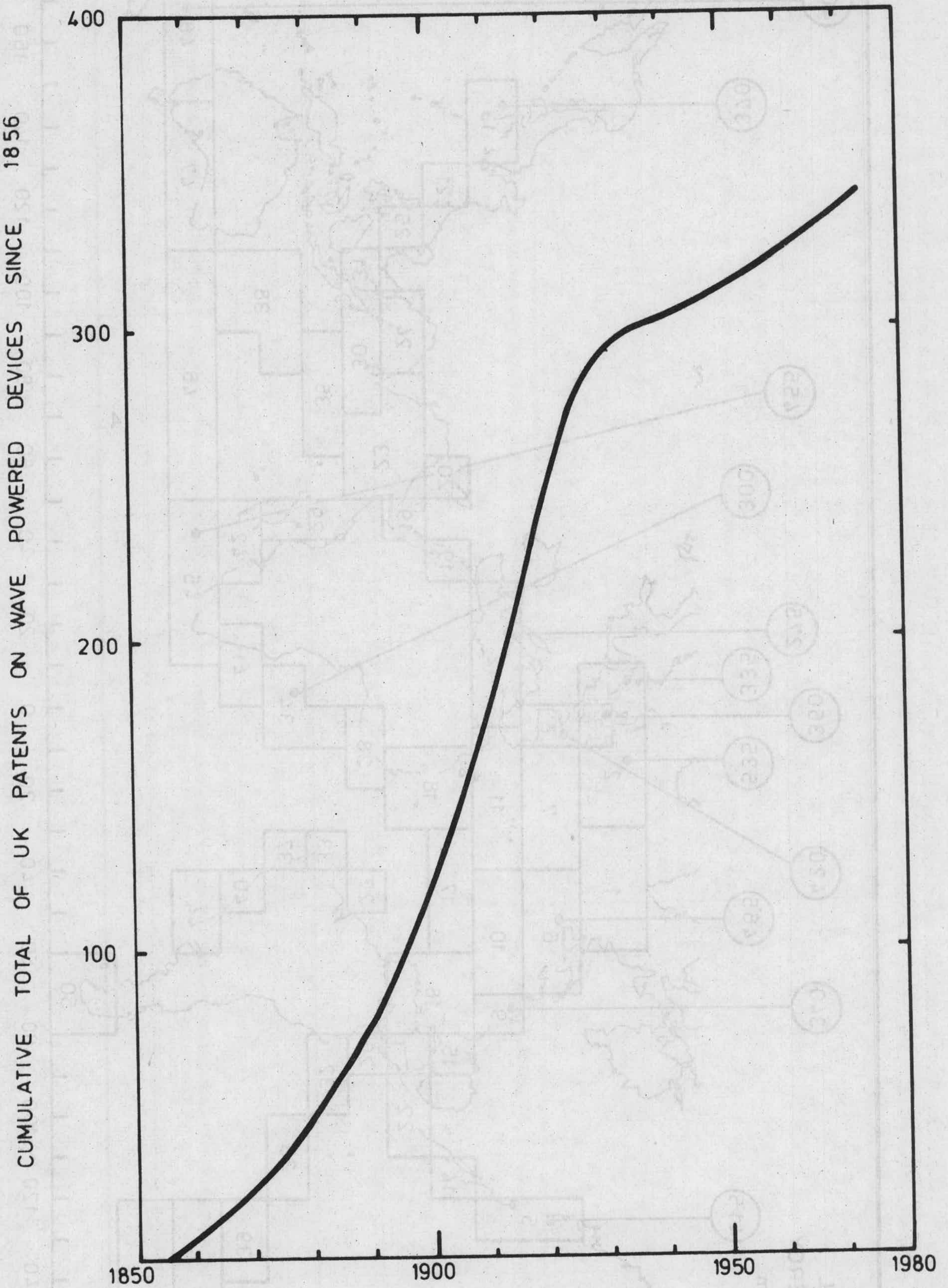

FIG 14 GROWTH OF UK PATENTS ON WAVE POWERED DEVICES.

FIG 15 GENERAL CLASSIFICATION OF WAVE POWERED GENERATORS

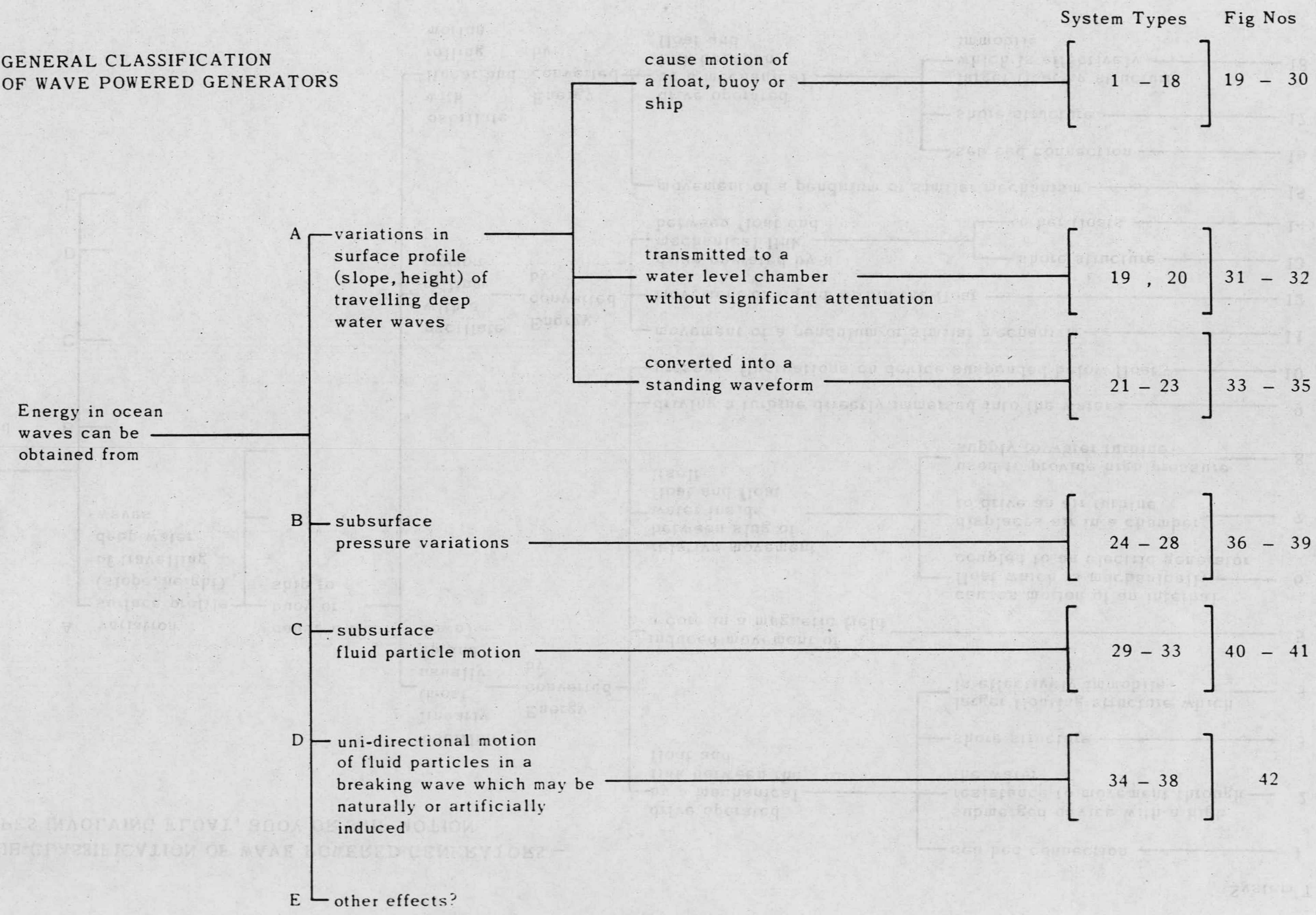

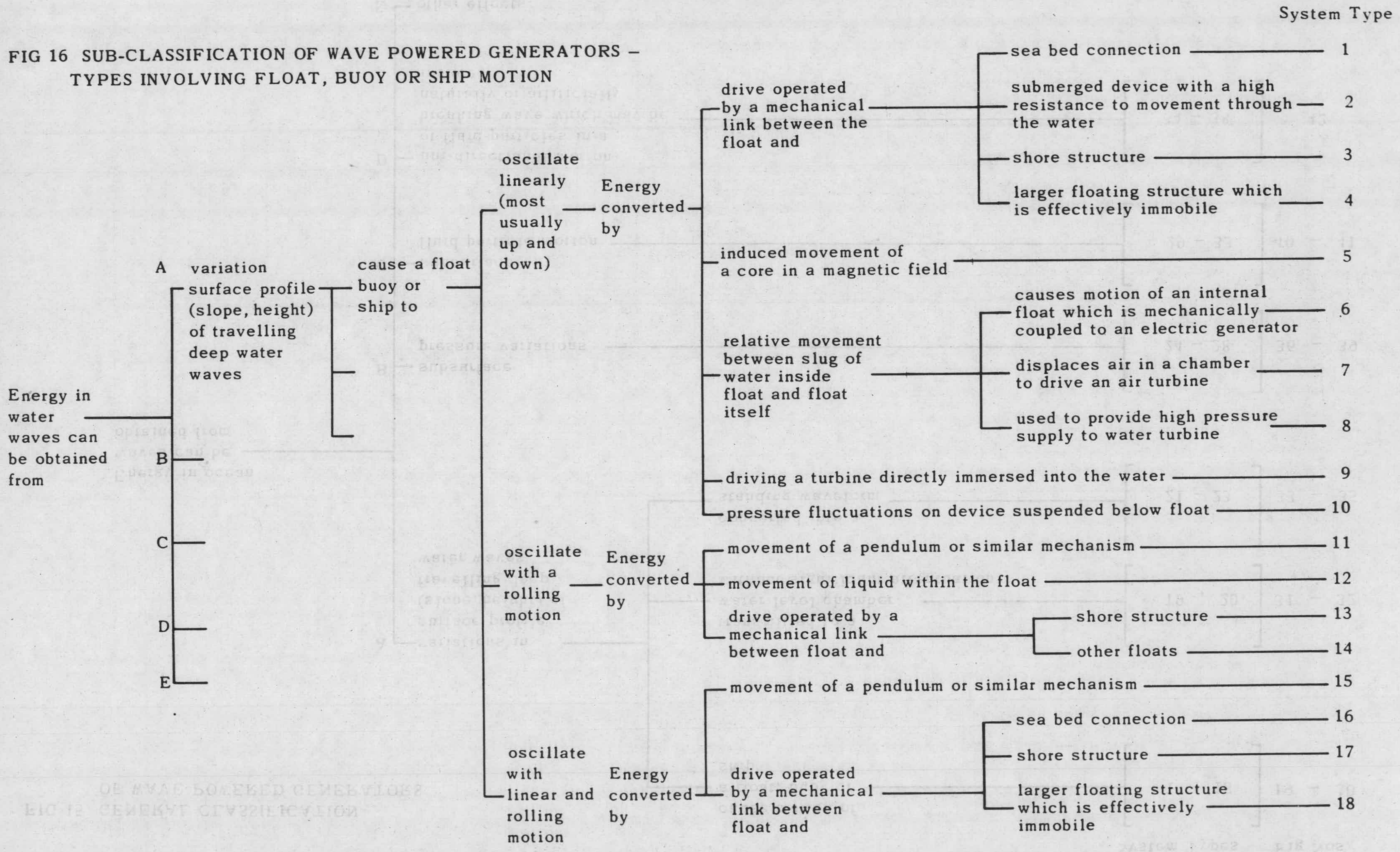

FIG 16 SUB-CLASSIFICATION OF WAVE POWERED GENERATORS – TYPES INVOLVING FLOAT, BUOY OR SHIP MOTION

FIG 17 SUB-CLASSIFICATION OF WAVE POWERED GENERATORS – TYPES DEPENDENT ON LEVEL OR PRESSURE FLUCTUATIONS WITHIN ENCLOSURES

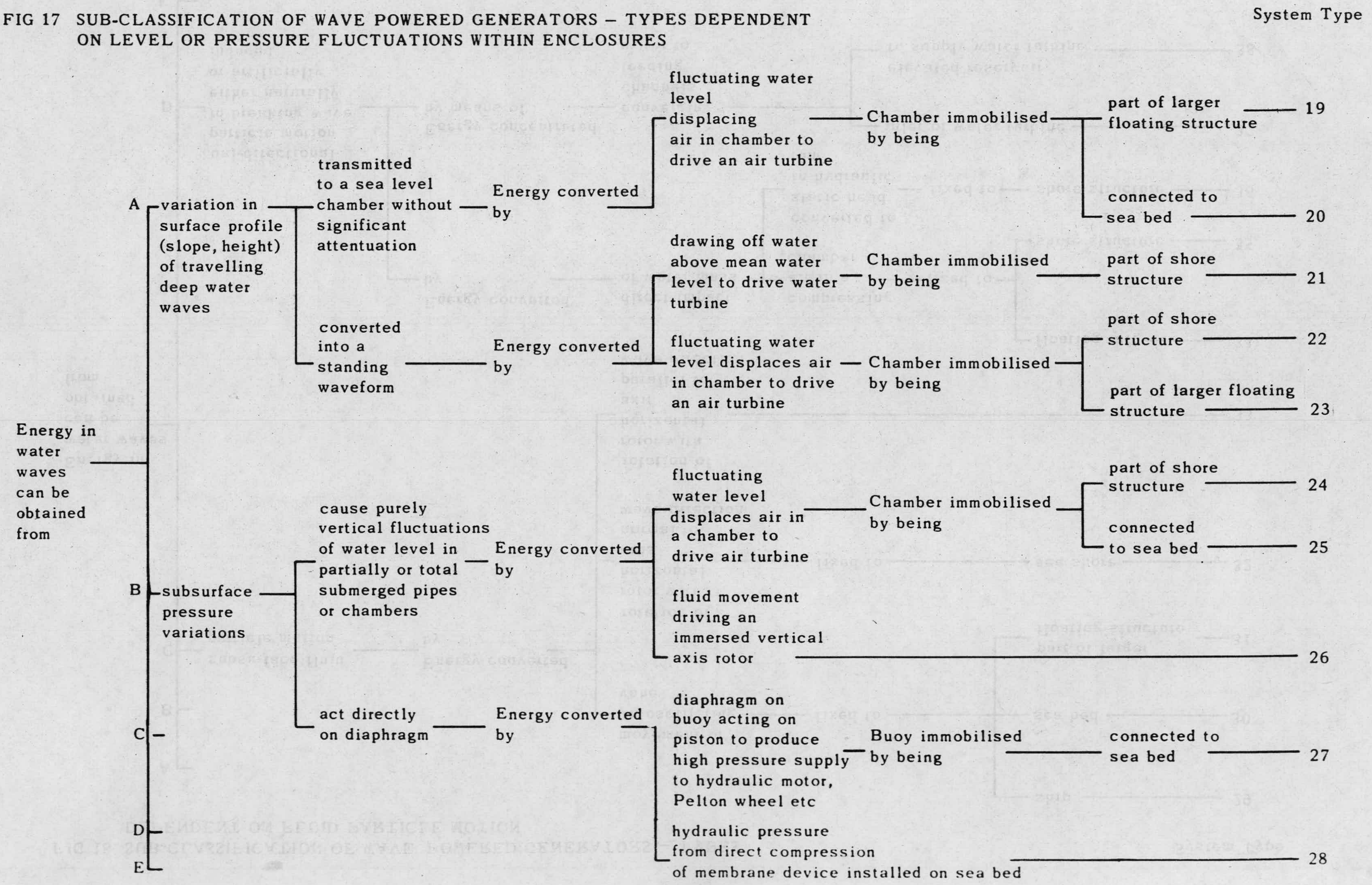

FIG 18 SUB-CLASSIFICATION OF WAVE POWERED GENERATORS – TYPES DEPENDENT ON FLUID PARTICLE MOTION

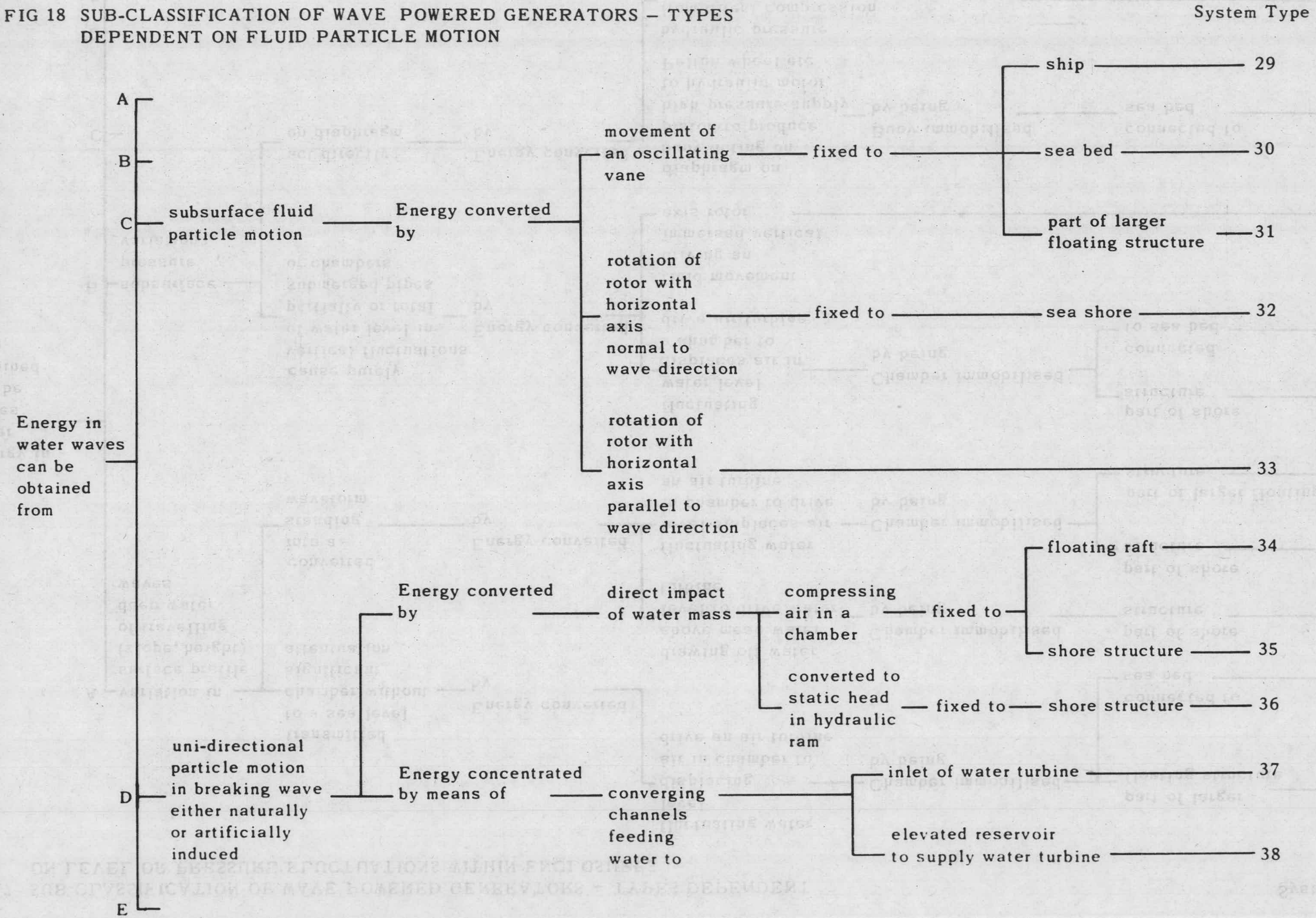

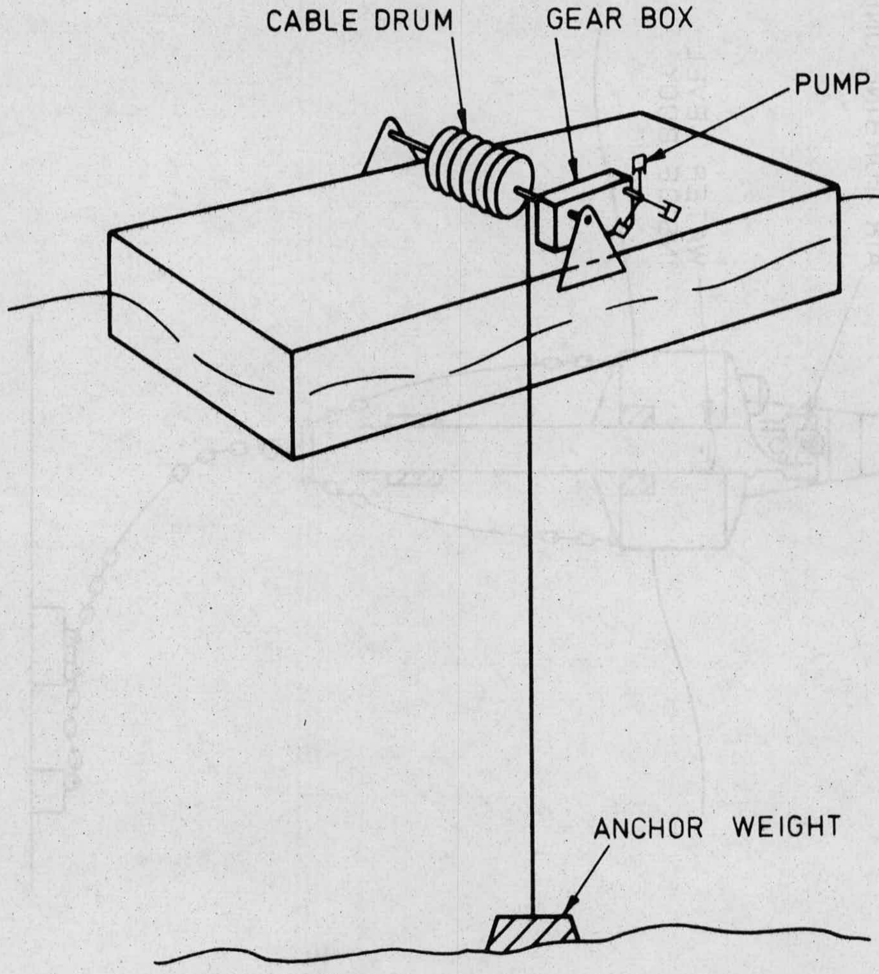

FIG 19 FLOAT/SEA BED CONNECTION
(DIAGRAMATIC ONLY)

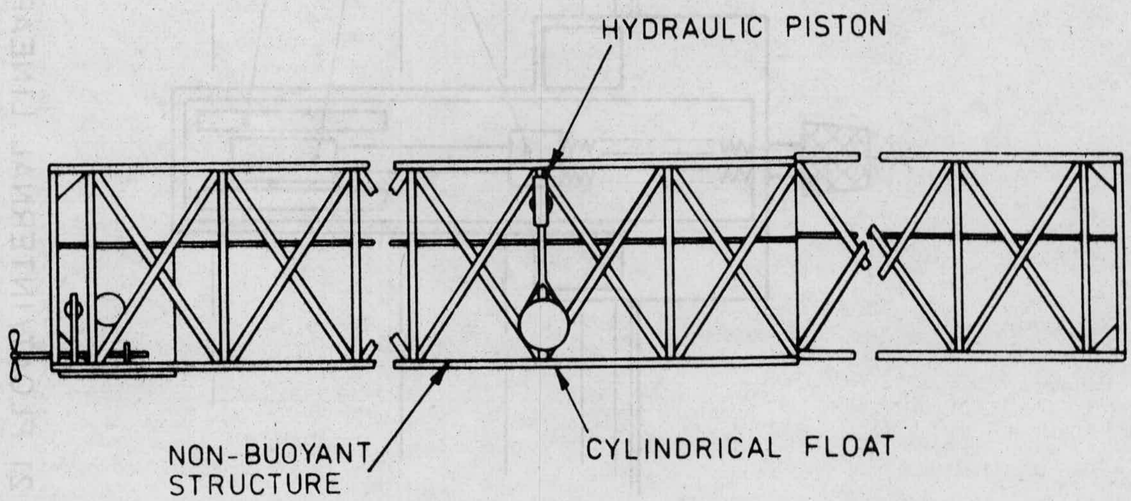

FIG 20 FLOAT/FLOATING STRUCTURE

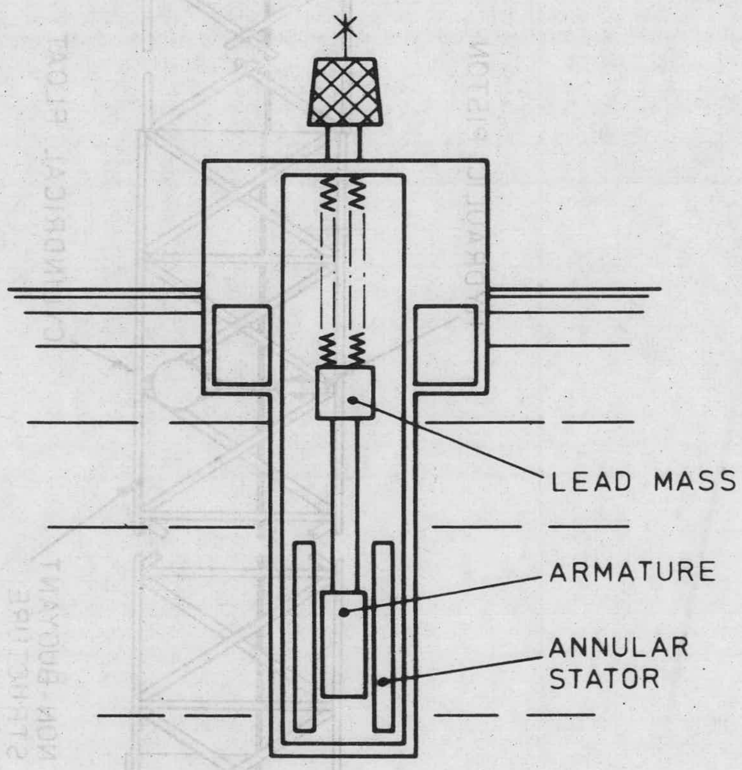

FIG 21 FLOAT/INTERNAL LINEAR GENERATOR

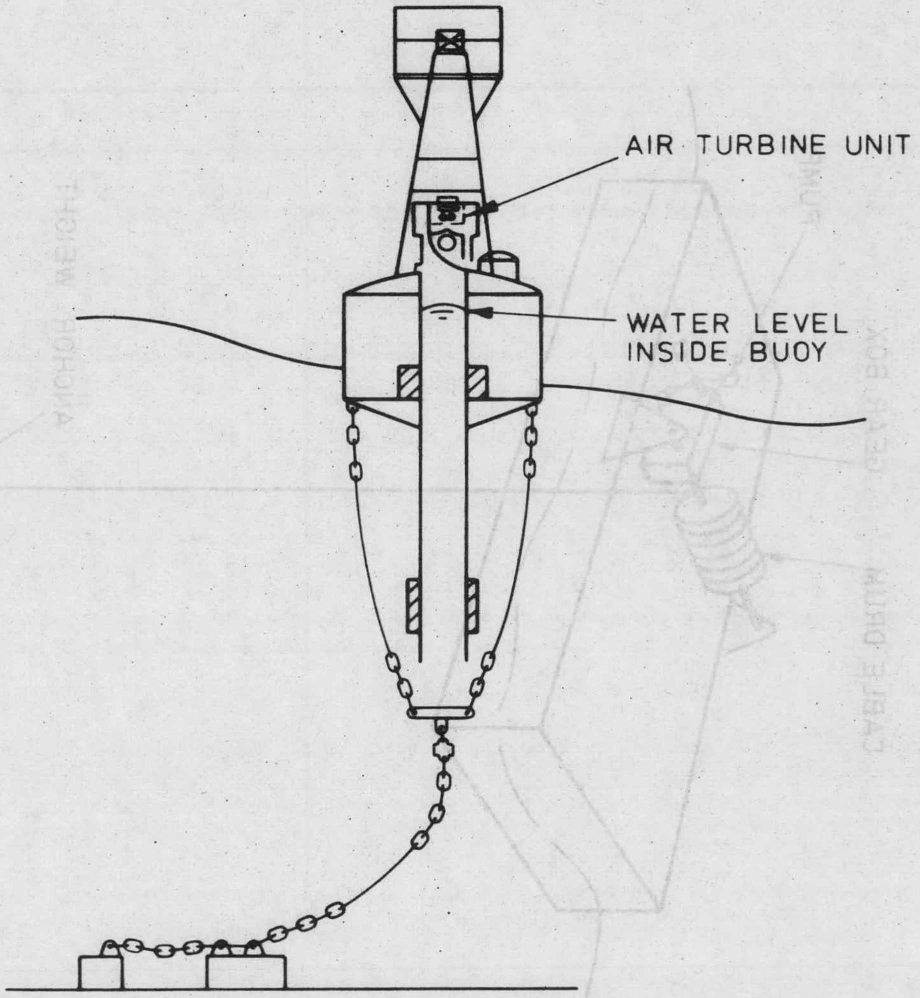

FIG 22 TAIL TUBE FLOAT/AIR TURBINE

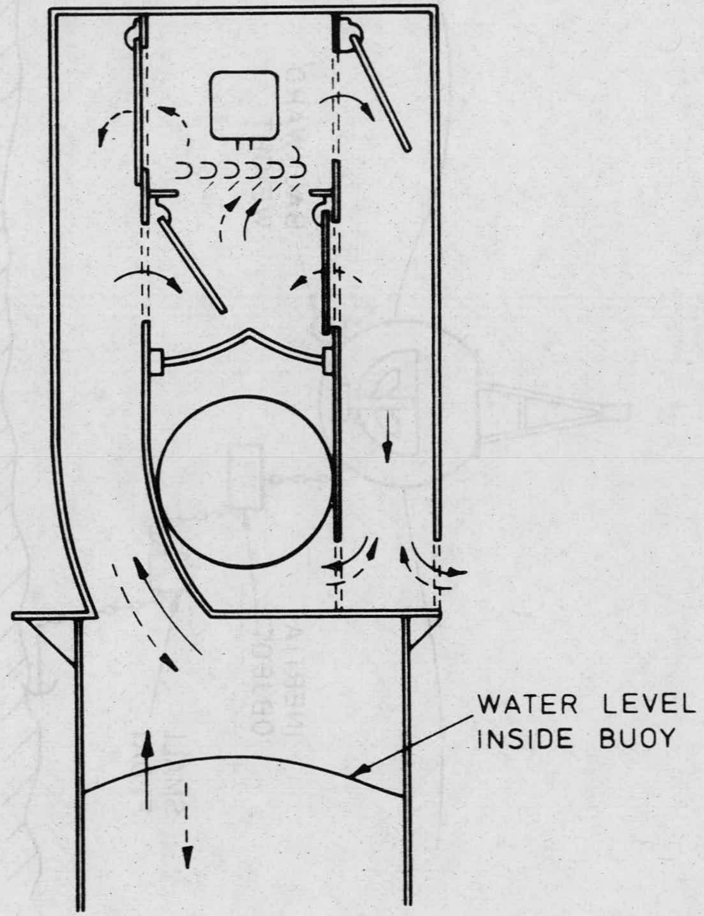

FIG 23 OPERATING PRINCIPLE OF AIR TURBINE UNIT

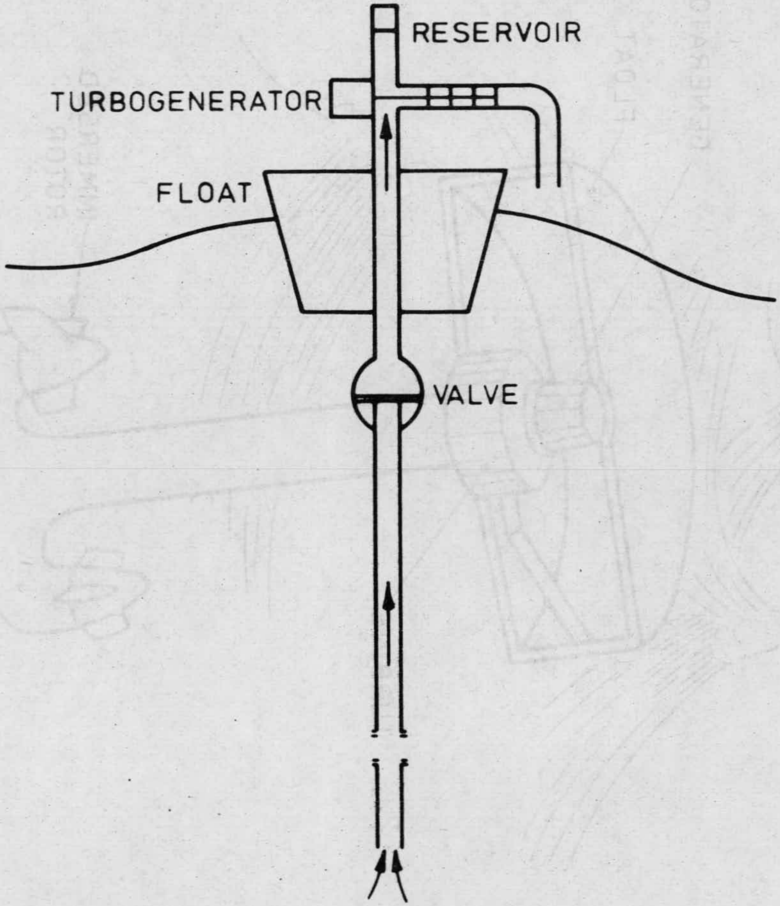

FIG 24 TAIL TUBE FLOAT/WATER TURBINE

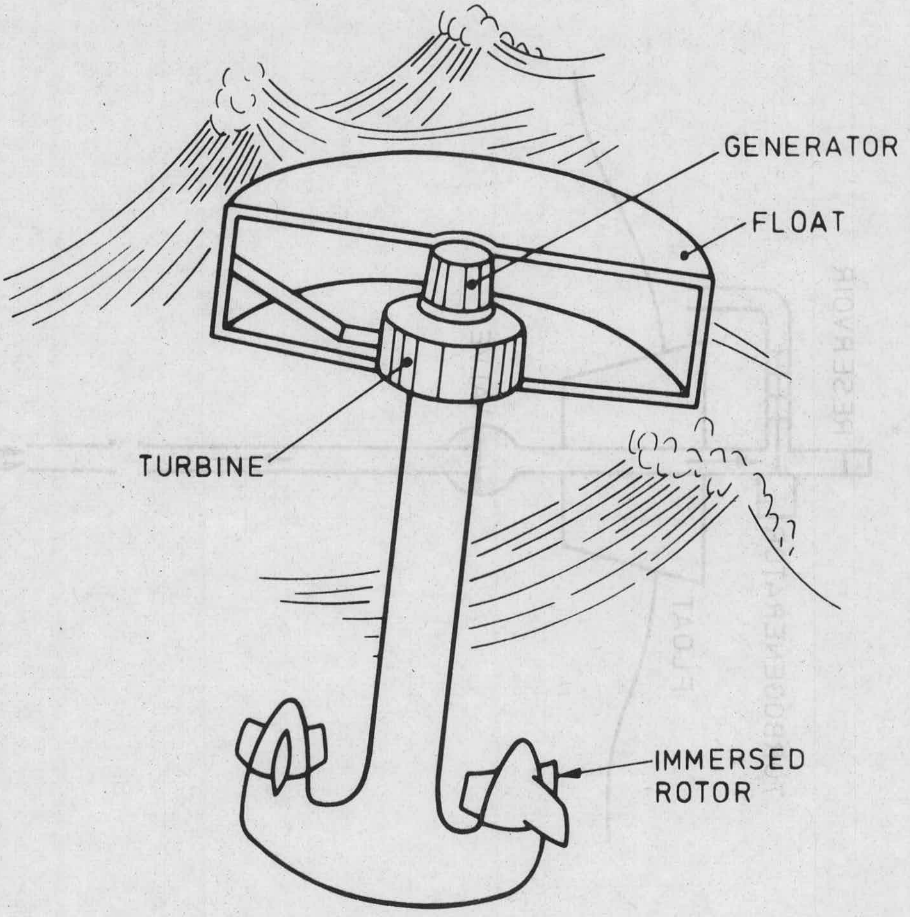

FIG 25 FLOAT/IMMERSED ROTOR

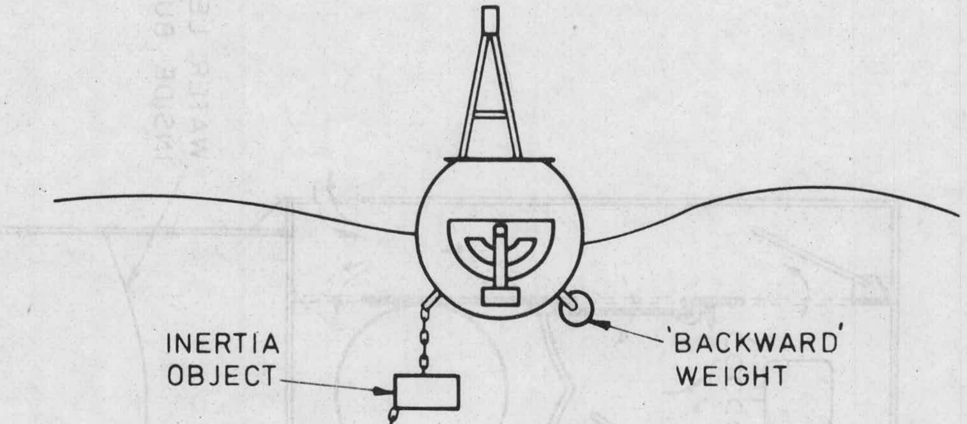

FIG 26 ROLLING FLOAT/PENDULUM

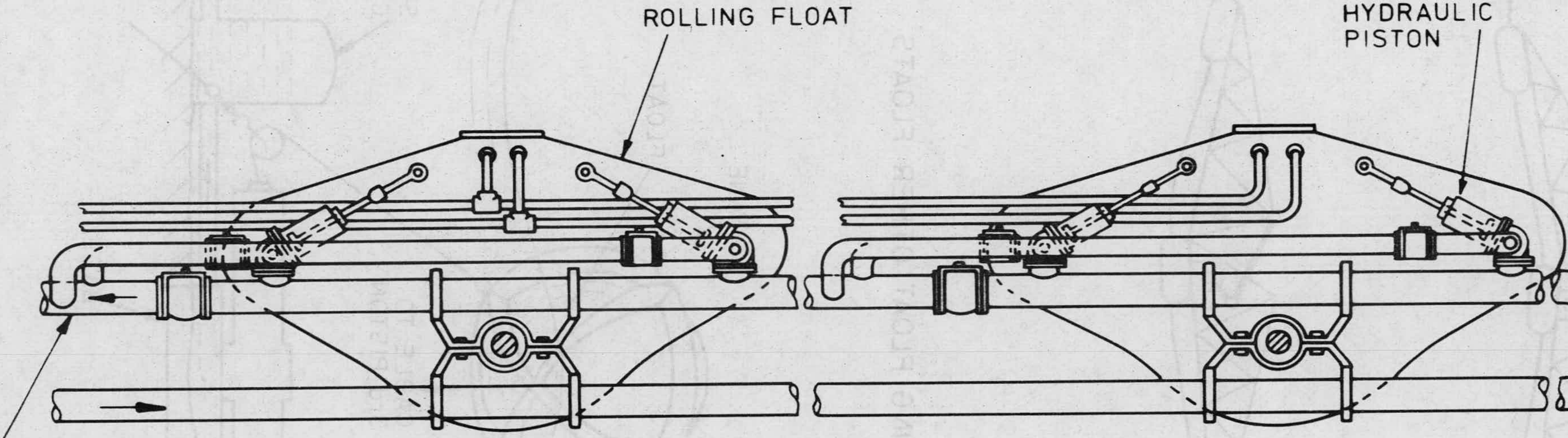

FIG 27 ROLLING FLOAT / SHORE CONNECTION

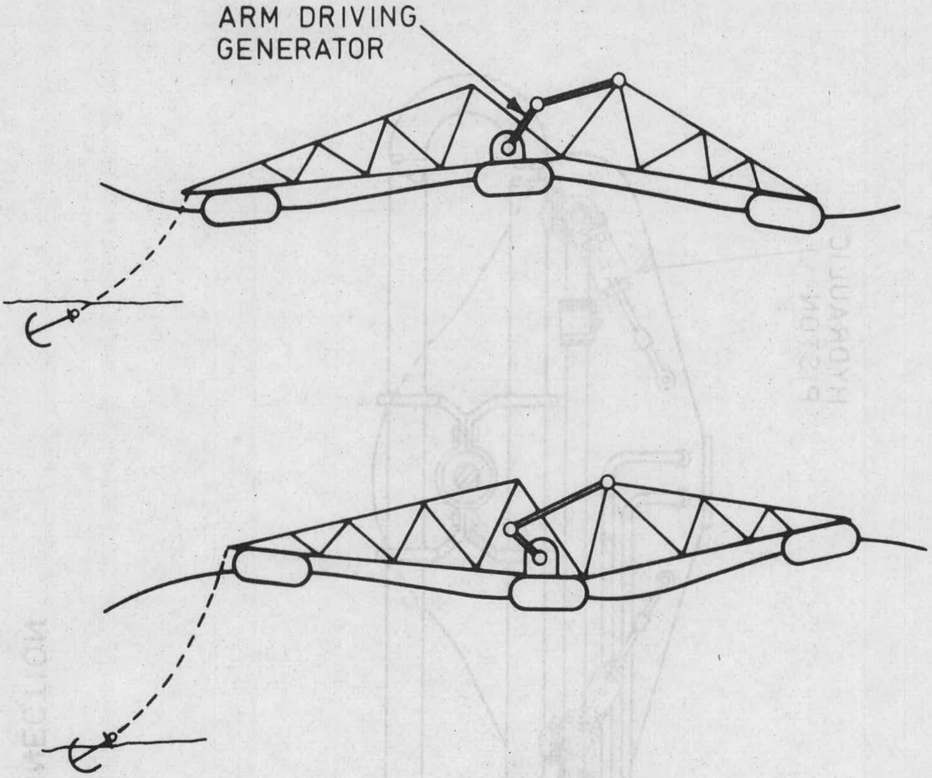

FIG 28 ROLLING FLOAT/OTHER FLOATS

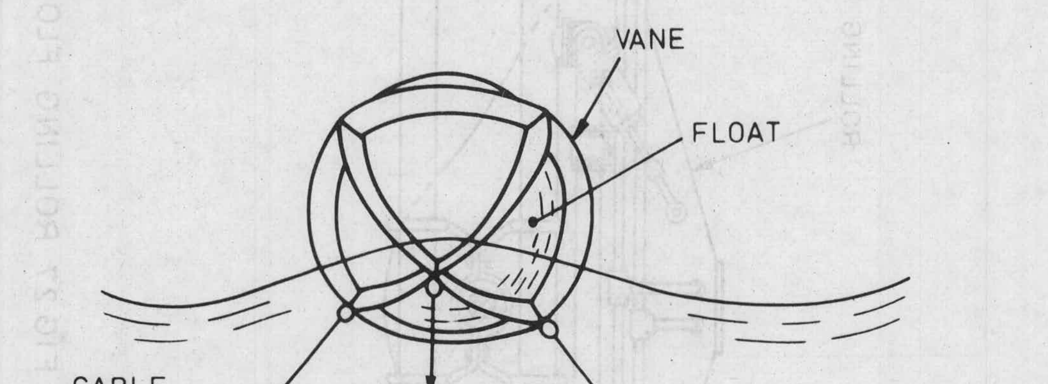

FIG 29 COMBINED MOTION FLOAT/SEA BED CONNECTION

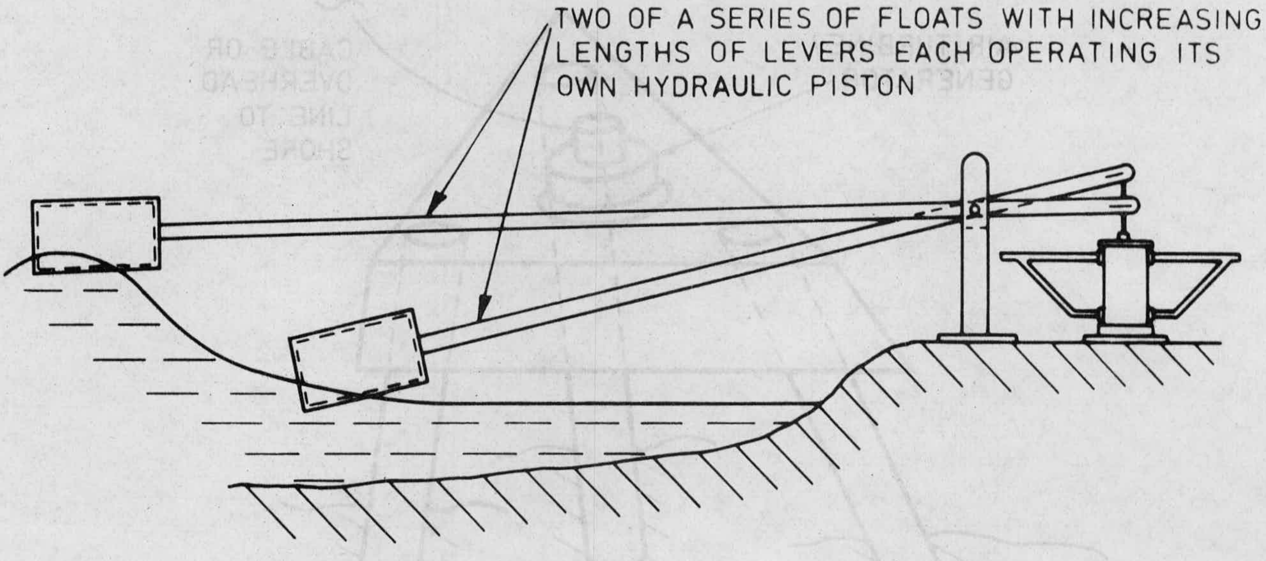

FIG 30 COMBINED MOTION FLOAT/SHORE CONNECTION

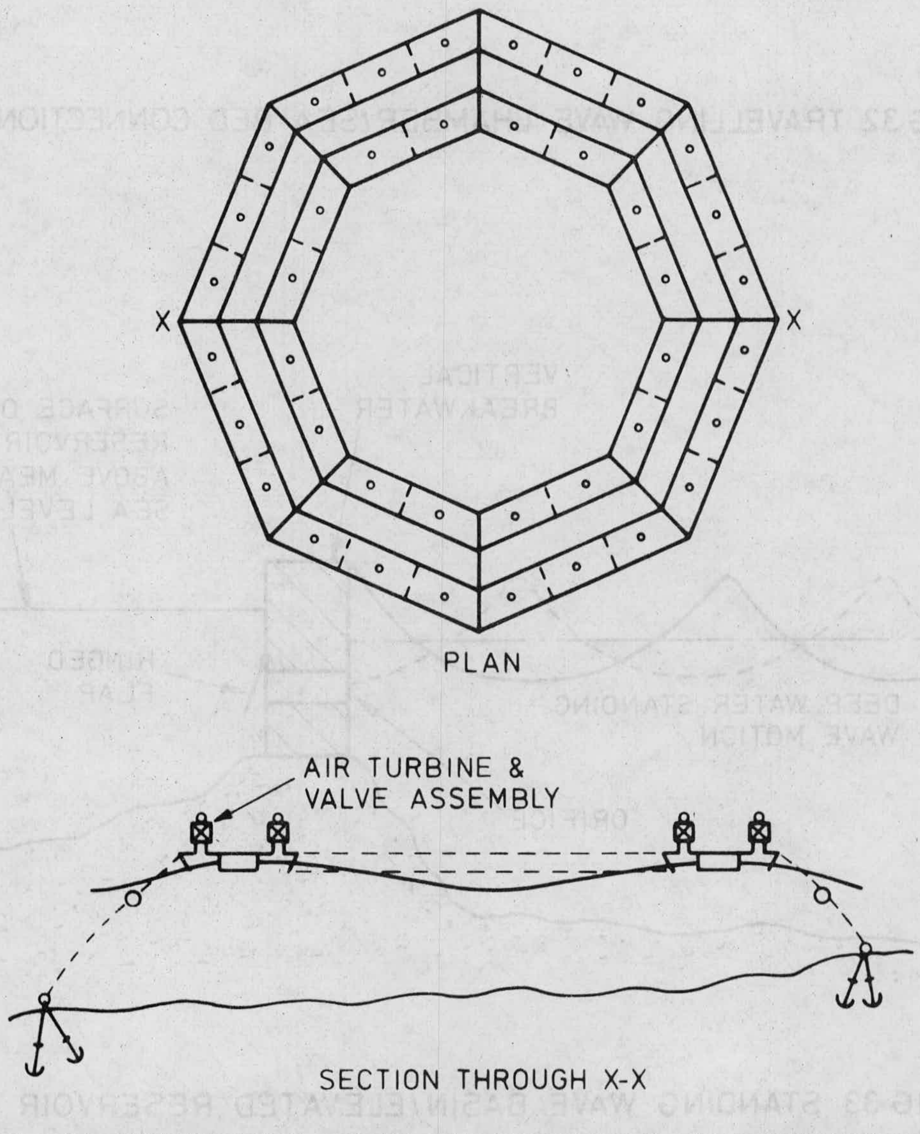

FIG 31 TRAVELLING WAVE CHAMBER/FLOATING STRUCTURE

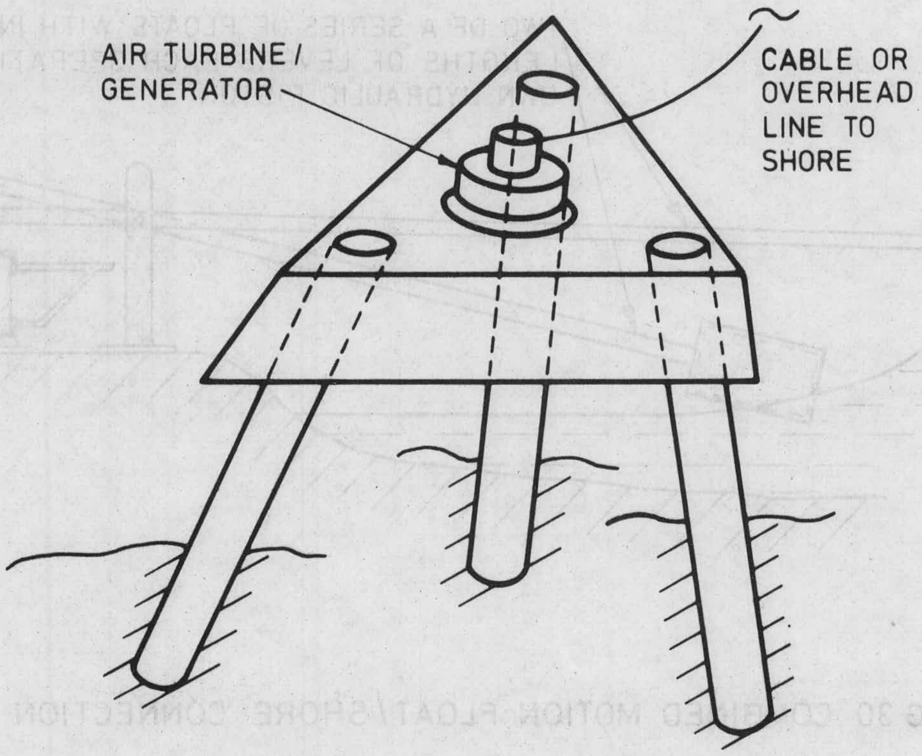

FIG 32 TRAVELLING WAVE CHAMBER/SEA BED CONNECTION

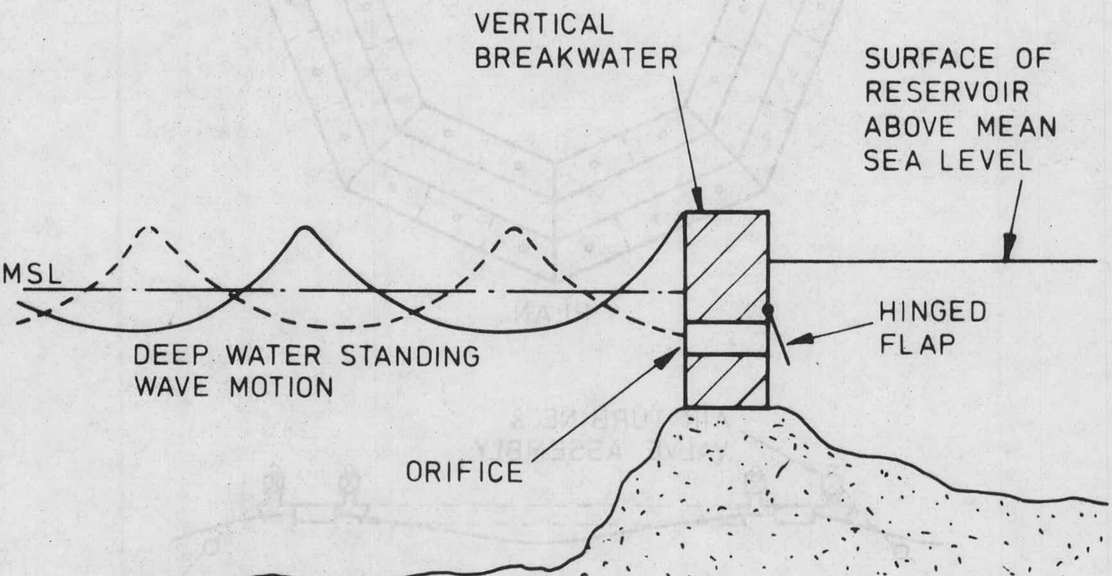

FIG 33 STANDING WAVE BASIN/ELEVATED RESERVOIR

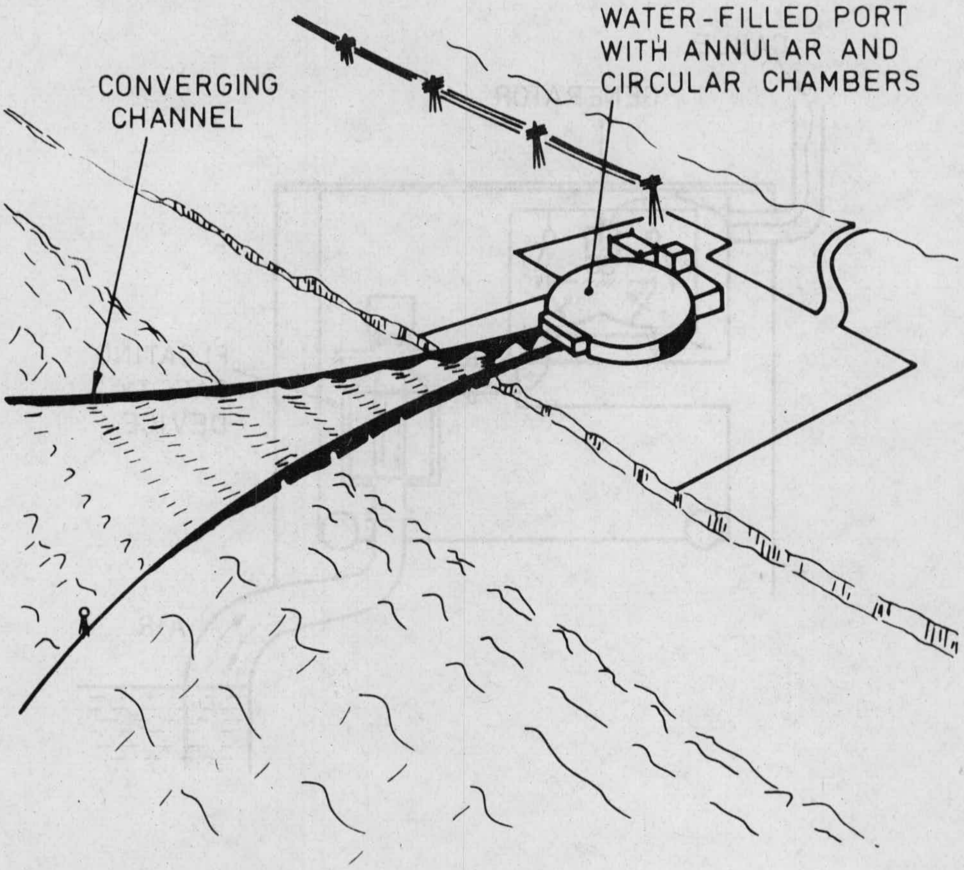

FIG 34 STANDING WAVE CHAMBER/SHORE STATION

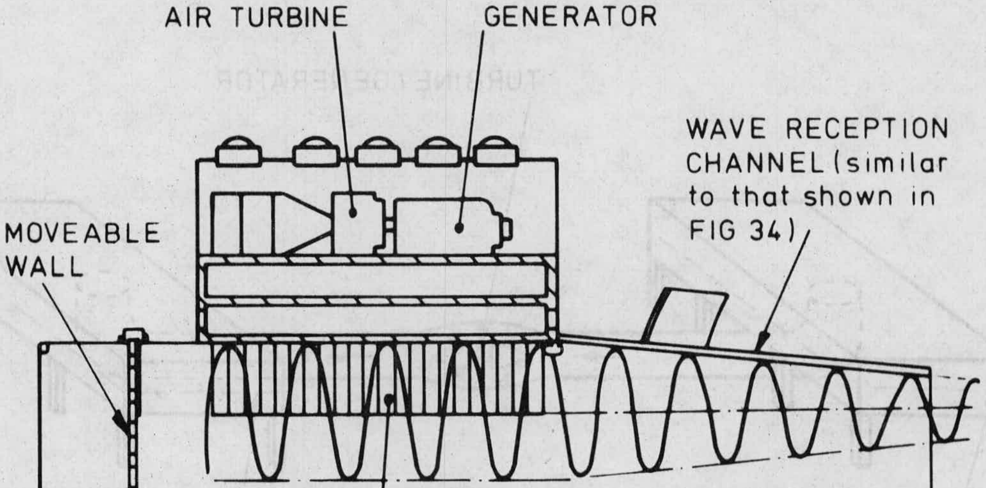

FIG 35 STANDING WAVE CHAMBER/FLOATING STATION

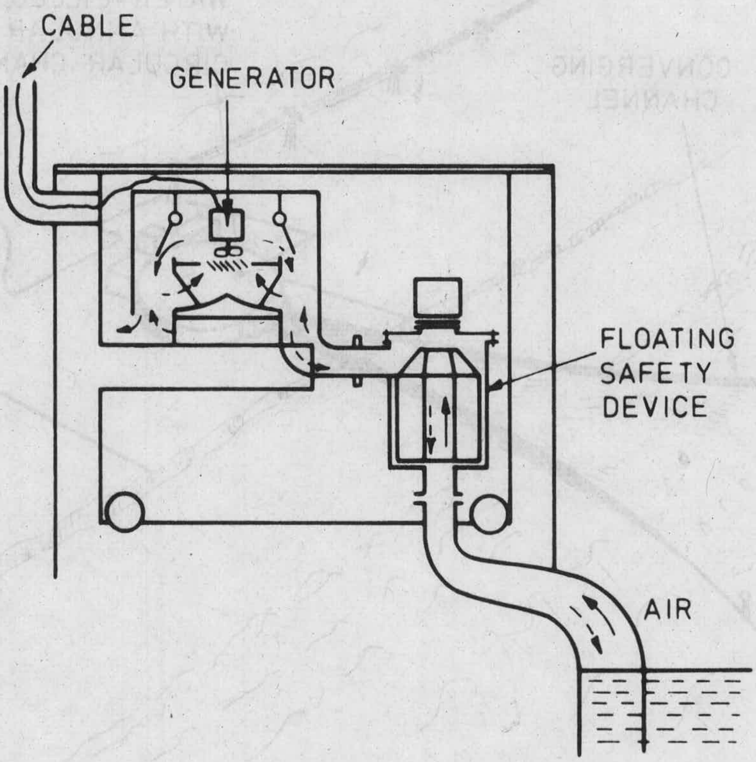

FIG 36 PIPE CONNECTED AIR CHAMBER/AIR TURBINE

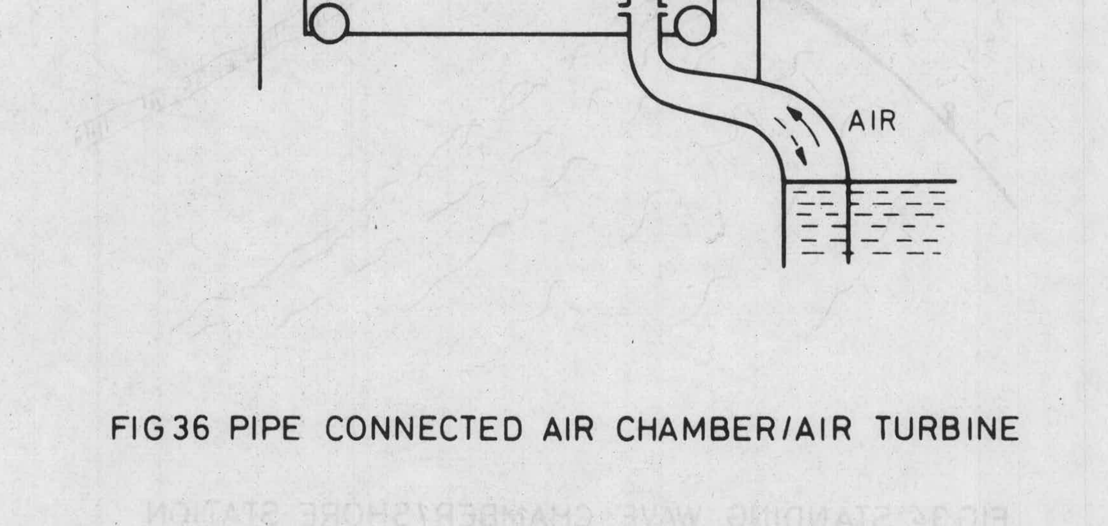

FIG 37 SUBMERGED AIR CHAMBER / SEA BED CONNECTION

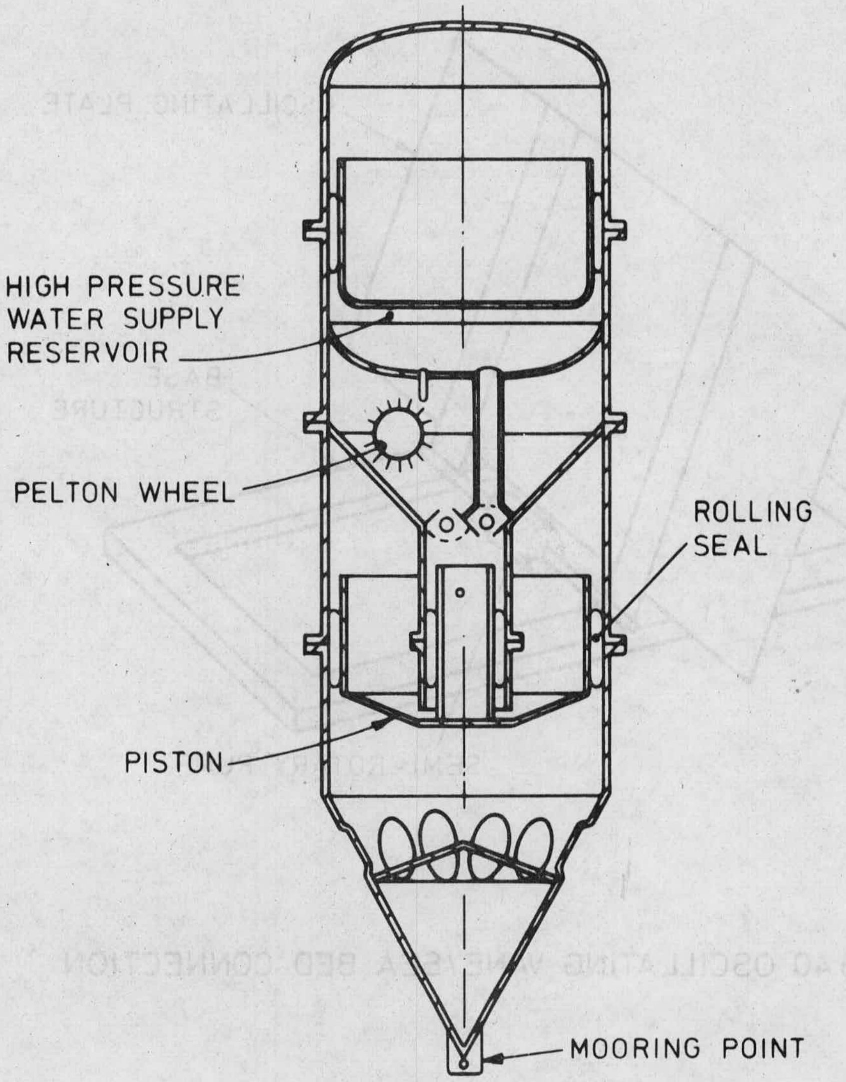

FIG 38 TAUT LINE BUOY/PISTON OPERATION

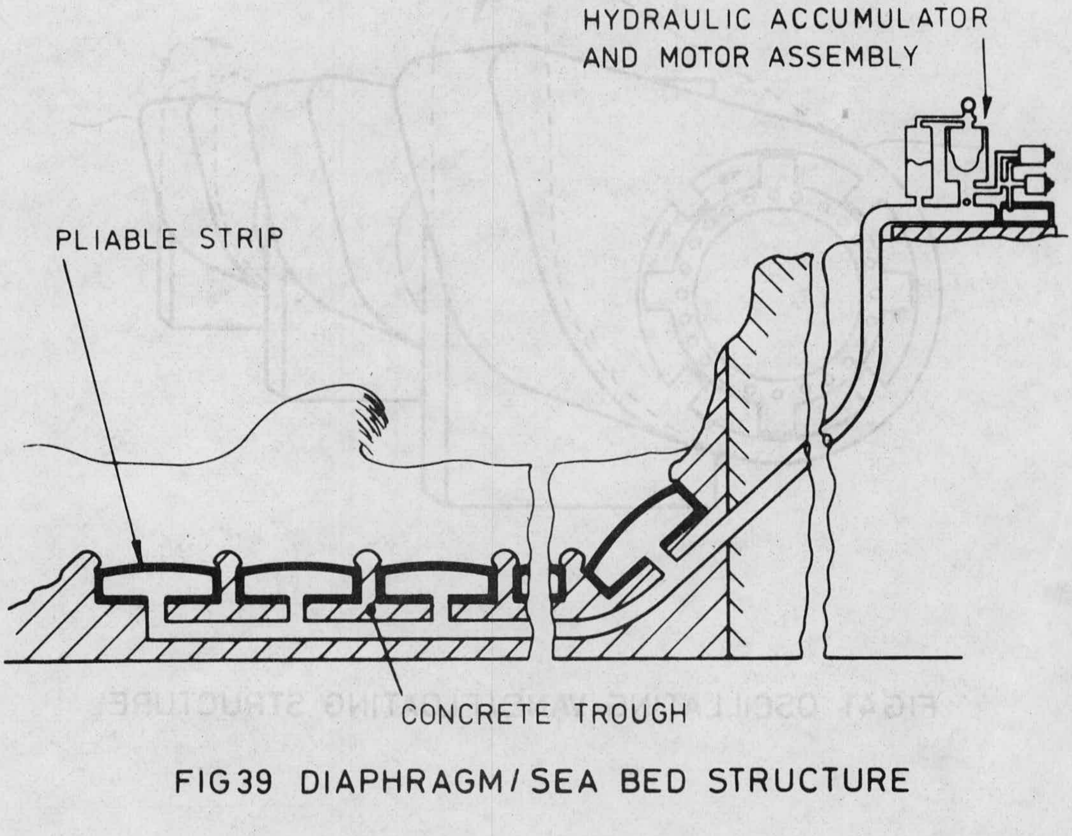

FIG 39 DIAPHRAGM/SEA BED STRUCTURE

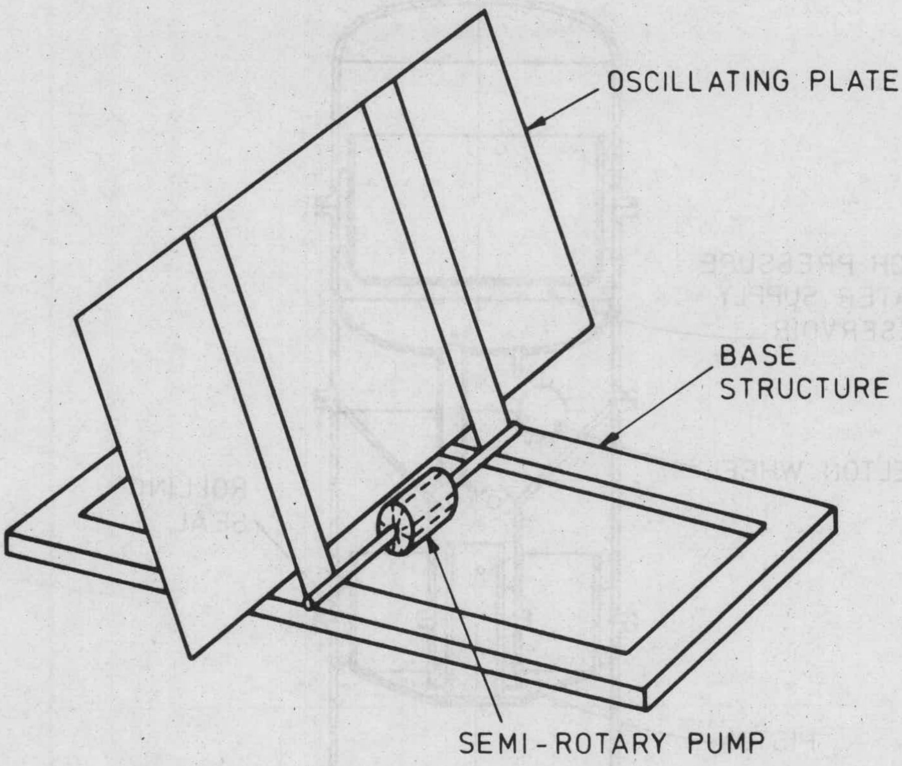

FIG 40 OSCILLATING VANE/SEA BED CONNECTION

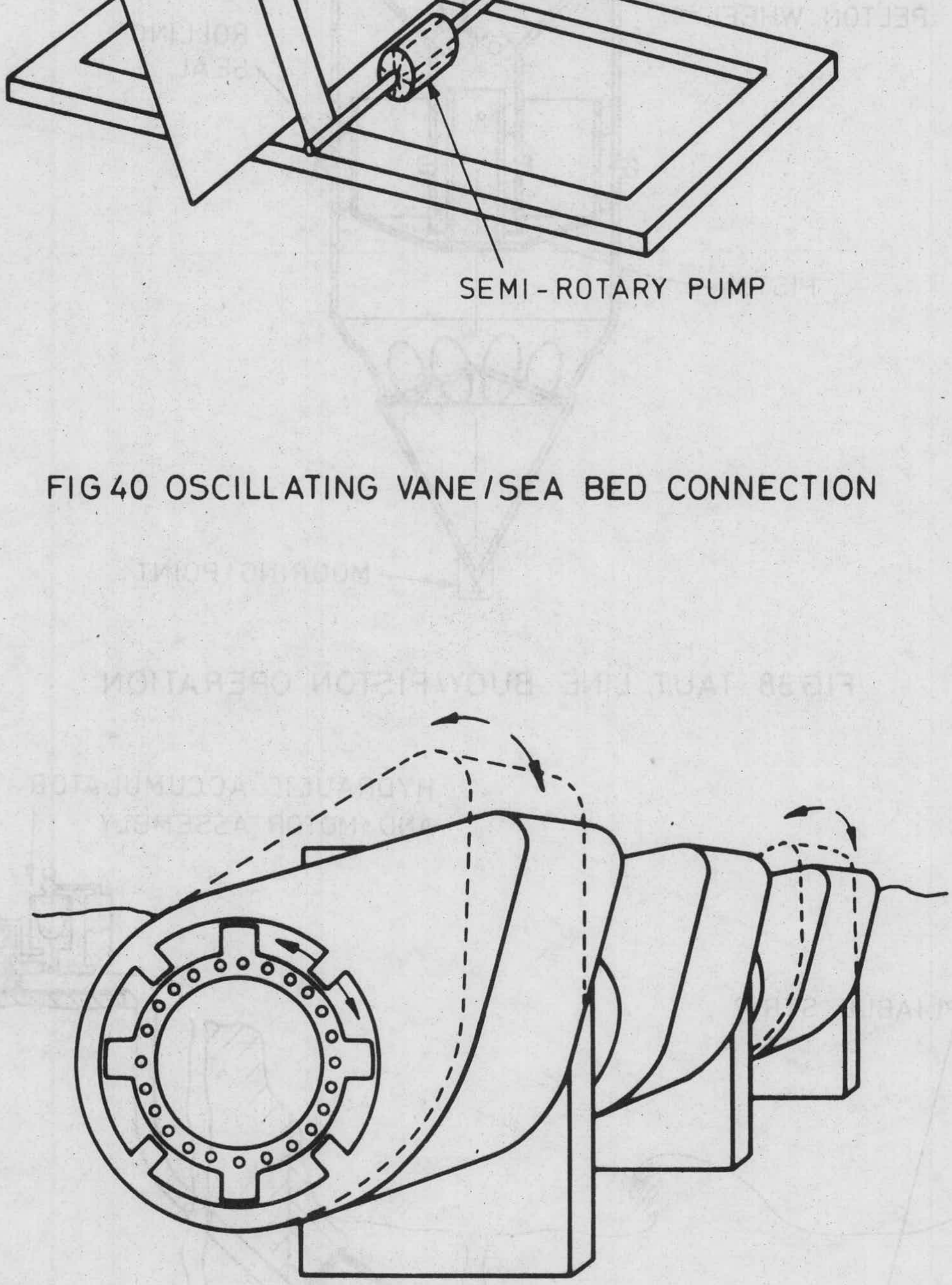

FIG 41 OSCILLATING VANE/FLOATING STRUCTURE

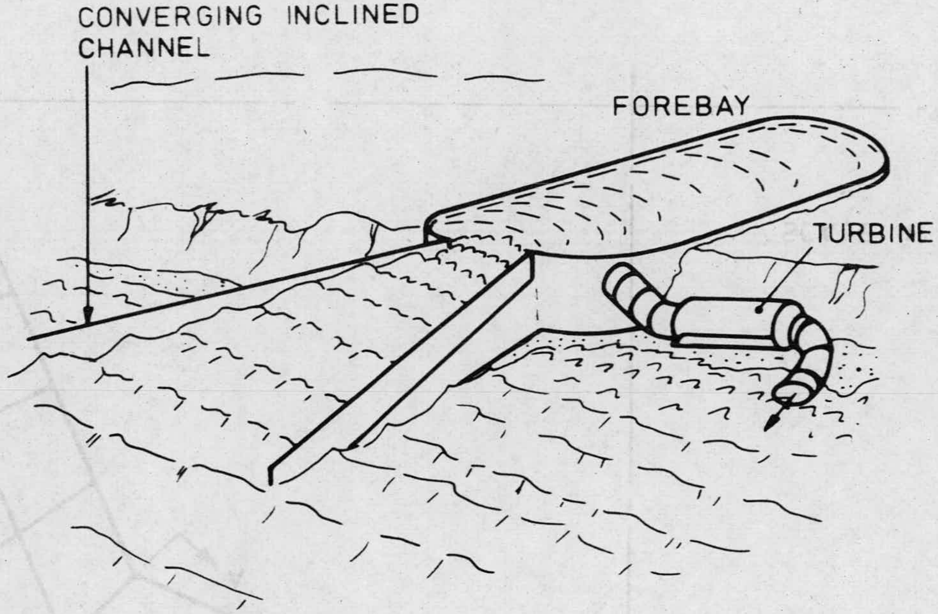

FIG42 CONVERGING CHANNEL/ELEVATED RESERVOIR

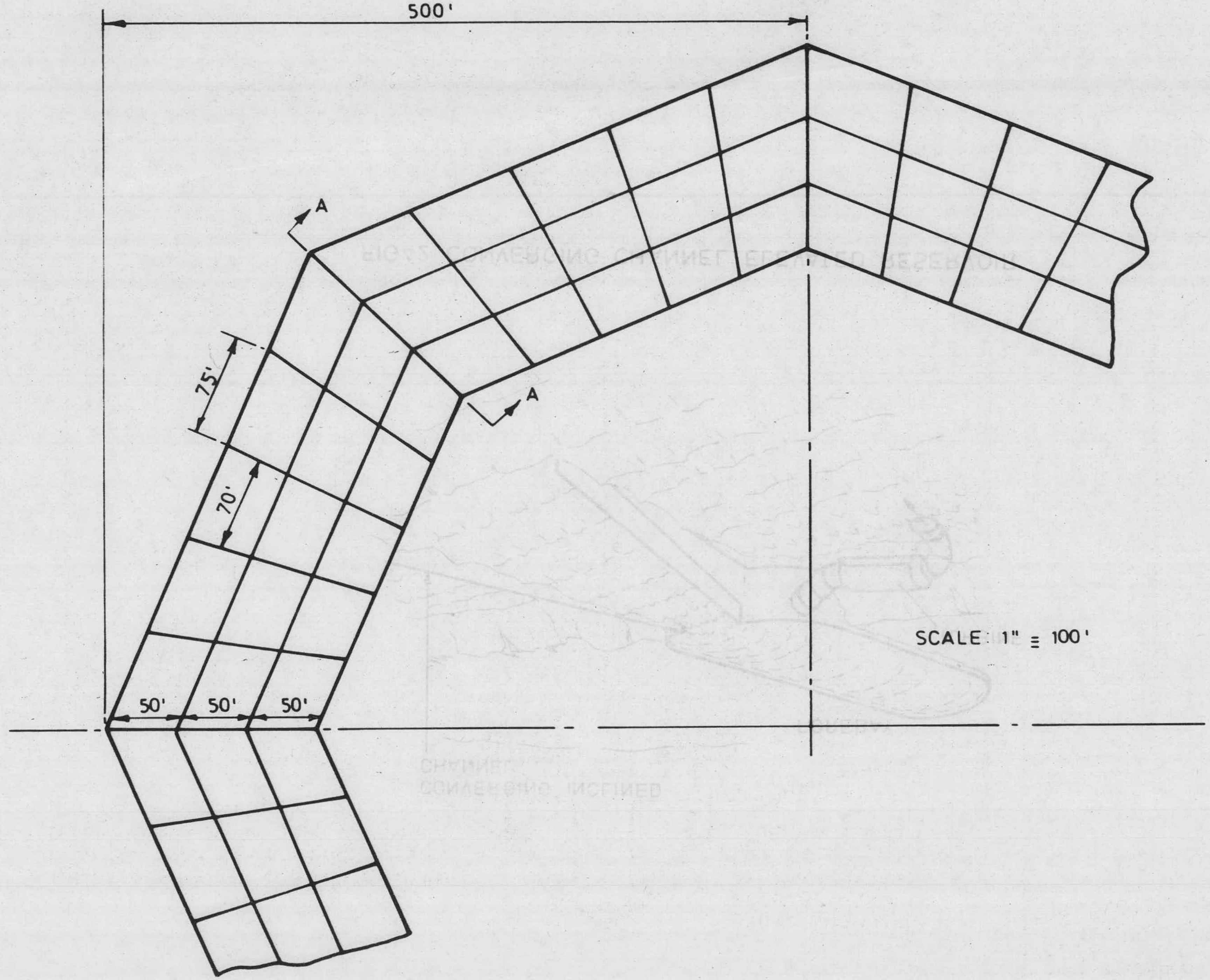

FIG 43 PLAN VIEW OF FLOAT GENERATING SYSTEM

MASUDA SUGGESTS:

1. 3cm dia. HOLES FOR NOZZLES
2. 2m. dia. WHEEL (cf 10')
3. 1500 rev/min INDUCTION MOTOR IN REVERSE AS GENERATOR

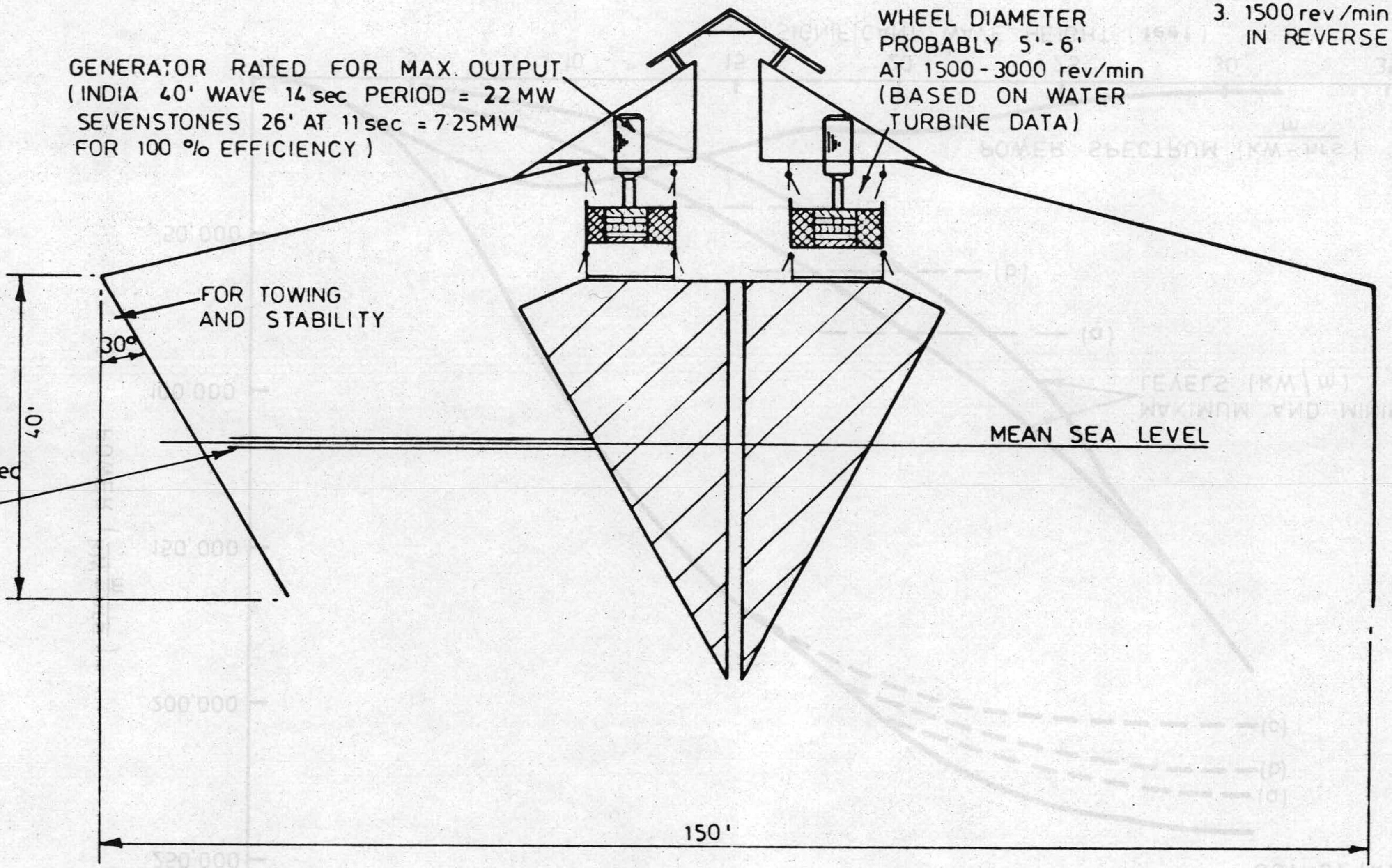

GENERATOR RATED FOR MAX. OUTPUT
(INDIA 40' WAVE 14 sec PERIOD = 22 MW
SEVENSTONES 26' AT 11 sec = 7·25MW
FOR 100 % EFFICIENCY)

WHEEL DIAMETER
PROBABLY 5'-6'
AT 1500-3000 rev/min
(BASED ON WATER
TURBINE DATA)

250' LONG WAVE
5' HIGH (7sec
PERIOD) MAX AND
MIN POSITION
WILL PRODUCE
AROUND 1800 ft /sec
AND PRESSURE
VARIATIONS
ABOUT ± 1psi IN
EACH CHAMBER

TOTAL HEIGHT
= 50 YEARS DESIGN
WAVE AT SEVENSTONES.

FIG 44 SECTIONAL VIEW OF FLOAT

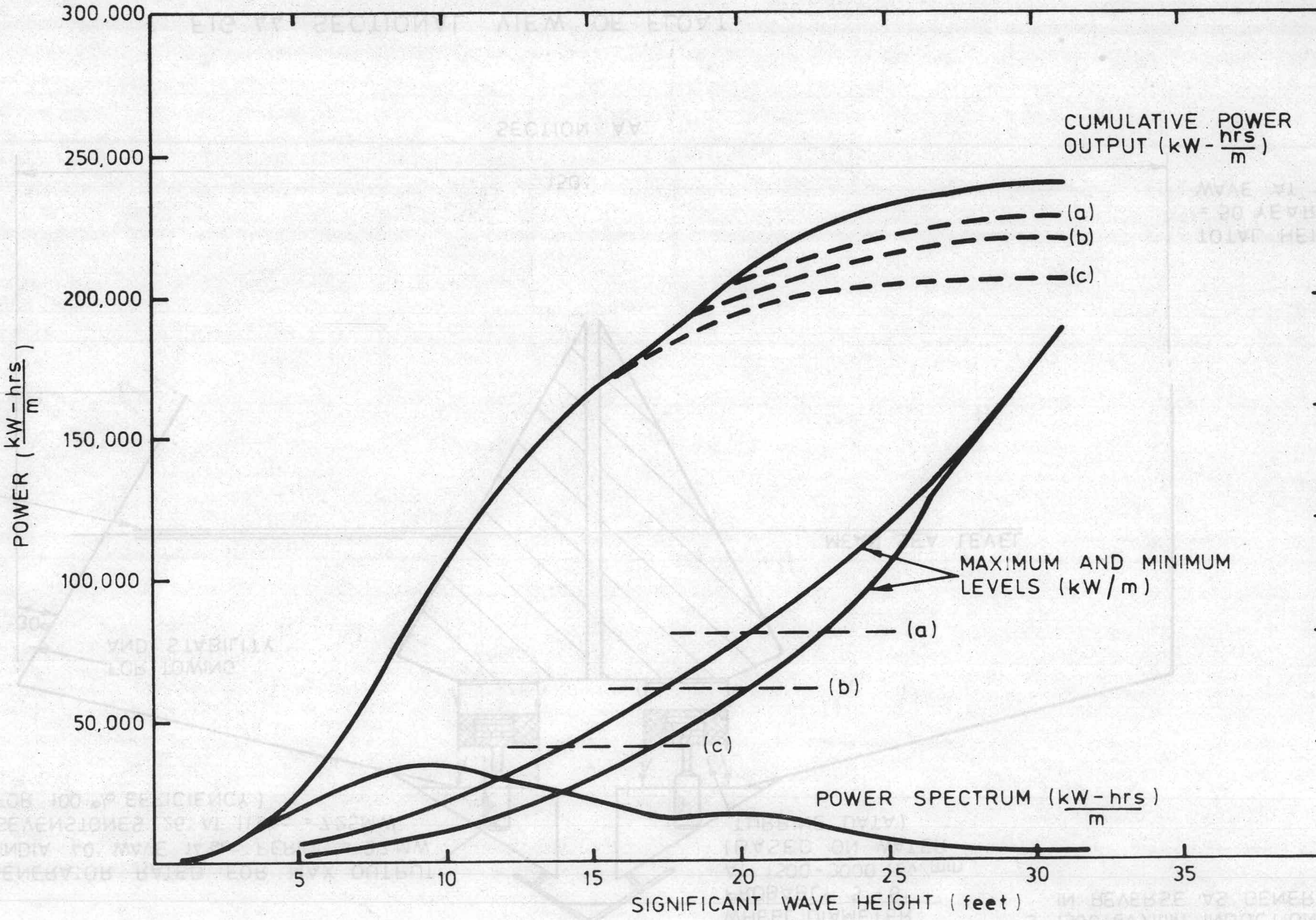

FIG 45 THE EFFECT OF LIMITING ACCEPTED POWER LEVEL

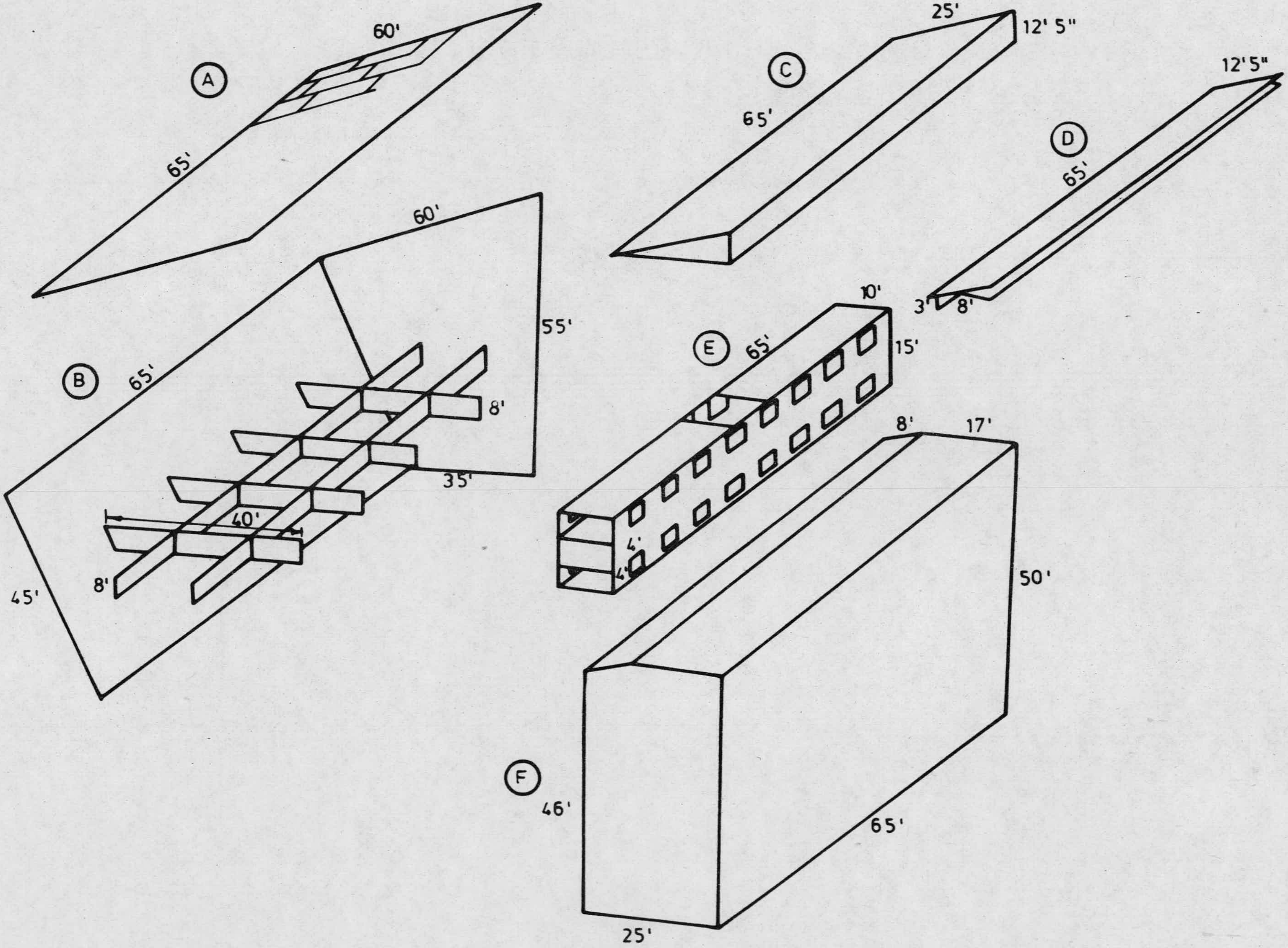

FIG 46 EXPLODED VIEW OF CHAMBER SUPERSTRUCTURE