The University of Akron

IdeaExchange@UAkron

Williams Honors College, Honors Research Projects

The Dr. Gary B. and Pamela S. Williams Honors College

Spring 2021

Implementation of an Autonomous Guided Vehicle (AGV)

Allen St. Myers
ams553@zips.uakron.edu

Alan Miller
arm175@zips.uakron.edu

Follow this and additional works at: https://ideaexchange.uakron.edu/honors_research_projects

Part of the Electro-Mechanical Systems Commons, Industrial Technology Commons, and the Manufacturing Commons

Please take a moment to share how this work helps you through this survey. Your feedback will be important as we plan further development of our repository.

Recommended Citation

St. Myers, Allen and Miller, Alan, "Implementation of an Autonomous Guided Vehicle (AGV)" (2021). *Williams Honors College, Honors Research Projects*. 1390.
https://ideaexchange.uakron.edu/honors_research_projects/1390

This Dissertation/Thesis is brought to you for free and open access by The Dr. Gary B. and Pamela S. Williams Honors College at IdeaExchange@UAkron, the institutional repository of The University of Akron in Akron, Ohio, USA. It has been accepted for inclusion in Williams Honors College, Honors Research Projects by an authorized administrator of IdeaExchange@UAkron. For more information, please contact mjon@uakron.edu, uapress@uakron.edu.

Implementation of an AGV

By

Alan Miller

Allen St. Myers

Final Report for 4600:497 Honors Project in Mechanical Engineering

Faculty Advisor: David Peters

Honors Reader 1: Dr. Yogesh Singh

Honors Reader2: Dr. Siamak Farhad

03 May 2021

Project No. 54

Abstract

This report thoroughly represents a proposal to AAM Metal Forming Minerva for the implementation of an AGV (Autonomous Guided Vehicle) Unit. Our recommendations are made with consideration to existing manufacturing processes and demonstrate how using an AGV would be a net positive investment for the company. By first examining the current operating costs, a three-tiered proposal is tailored based on increasing investment cost. Each tier increase encompasses the previous tiers' proposed improvements while also growing in complexity and investment cost. The results of our research indicate that our Tier 2 proposal will provide the most benefit to our facility now and for years to come.

Table of Contents

What is an AGV? 1

How Do AGV's Impact Manufacturing? 2

Modification of Objective 3

- **Original Objective 3**
- **Implementation Troubles 3**
- **Modified Objective 4**

Operational Considerations 5

- **Travel Path 5**
- **Programming Guide 6**
- **Safety 8**

Tier I Implementation: Output Shaft Process + AGV Repair 10

- **Tier I: Current Assessment: Output Shaft 10**
- **Tier I: Process Improvement Value 10**
- **Tier I: Installation Cost 11**
- **Tier I: Integration 12**
- **Tier I: Program Script 13**
- **Tier I: TOTAL 13**

Tier II Implementation: Input Shaft + Tier I 14

- **Tier II Additional Equipment 14**
- **Tier II: Current Assessment Input Shaft 14**
- **Tier II: Process Improvement Value 15**
- **Tier II: Installation Cost 15**
- **Tier II: Integration 16**
- **Tier II: Program Script 17**
- **Tier II: Total 17**

Tier III Implementation: Scrap Material Handling + Tiers 1 and 2 18

- **Tier III: Additional Equipment.....18**
- **Tier III: Current Assessment.....18**
- **Tier III: Process Improvement Value.....18**
- **Tier III: Installation Costs 19**
- **Tier III: Integration.....19**
- **Tier III: Program Script 19**
- **Tier III: Total 20**

Summarization of Proposal.....21

Conclusion 23

References.....24

Appendices.....25

- **Appendix A 25**
- **Appendix B 31**
- **Appendix C 44**
- **Appendix D 129**

What is an AGV?

AGV stands for Autonomous Guided Vehicle. This vehicle enables manufacturing facilities to move material around the plant without use of an operator as shown in Figures 1 and 2. AGV's are built with different functions and features depending on what and where their intended use is. Modern AGVs offer high mobility, being able to change speeds and turn corners pivot style, resulting in a near zero turn radius. They also offer high durability with their construction of steel with reinforced suspension and steering elements. To navigate, AGVs can rely on GPS, magnetic tape paths, RFID transponders, and programmable turn and distance movements. With added safety features such as emergency upset stop, audio emission, and vision sensors, AGVs are a reliable tool in the workplace.

Figure 1 – The AGV

Figure 2 – Carrying Parts

How Do AGVs Impact Manufacturing?

AGVs are becoming more and more popular in manufacturing, from AGVs being used in Amazon Warehouses to being used in an automotive manufacturing environment like ours. But what do AGVs bring to the table? Typical application in manufacturing leads to productivity rising from less down times in raw material movement. AGVs can be programmed and dispatched in many ways to get raw material where it needs to be quickly. They can also help bridge the gap when hiring another person is too expensive. An example being our case, where forklift utilization is above 100%, but not high enough to justify purchasing another driver and forklift. It allows utilization of one forklift driver to be reduced to near 100% without having to deal with hiring an additional driver and both being under-utilized.

Modification of Objective

Original Objective

The original objective of this project was to completely implement an AGV that was received used from another AAM facility into production for our facility, specifically to work and communicate with an automated bin pick cell.

Implementation Troubles

When first beginning to analyze our AGV to determine how it functions, we quickly found out that there were some glaring issues. The AGV was completely de-energized upon unbox. After spending 24 hours on the charger, two out of four batteries were found ruptured and the other two were severely deformed and melted together as shown in Figure 3. The diagnosis of this problem is that the on-board float charger kept pumping a high level of volts into the batteries overnight. The aged batteries could not reach the cut off voltage of the charger, meanwhile the charger kept applying voltage while attempting to charge them. The result was heat buildup. New batteries were installed, and we had no further issues with charging.

Figure 3 – Defective Batteries

The next issue faced was that the motors were not operating. The suspected cause was an issue with the motor controller as shown in Figure 4. After downloading RoboteQ motor controller software, suspicions were confirmed. There was an internal short present on the controller. Facing a 6-week lead time on the company ordered replacement, our group decided to purchase our own controller online for $500.00, with a lead time of 1 week. Within 2 hours of installing the new motor controller it shorted out. The problem was deeper than originally thought. We began troubleshooting other possible issues while getting in contact with the AGV's manufacturer. Unable to work out the issue ourselves, we reached out to the manufacturing department for further repair advice. After another round of troubleshooting, we were able to determine there was an intermittent short within the main control board of the whole AGV which caused the motor controller to internally short. Due to trickledown effects of COVID-19, this part was on back order with a long lead time and would not be completed within the time frame of this project.

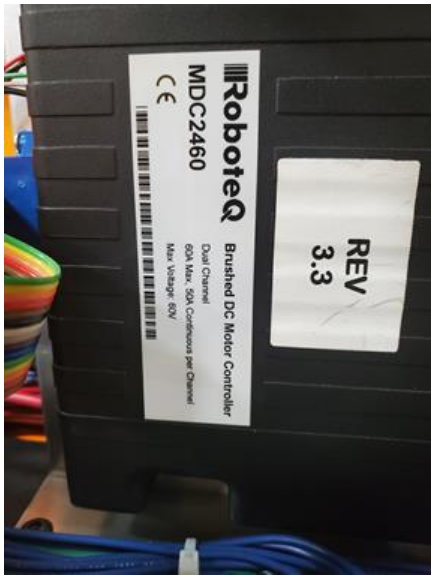

Figure 4 – Motor Controller

Modified Objective

As a result of the previously mentioned troubles with the AGV, it was decided to change our project objective to develop and present a detailed three-tiered plan for potential AGV applications within our facility, complete with cost benefit analysis and a full travel path and program guide for each tier.

Operational Considerations

Travel Path

The primary travel path was determined based on three considerations: travel distance, route characteristics, and the ability to configure subsequent tiers from prior movements. The timing factors used to calculate the total time to complete tasks are listed below in Table 1.

AGV Timing Variables	
Speed (ft/min)	150
Turning Time (s)	3
Pin Movement Time (s)	5

Table 1 – AGV Timing Variables

Travel Distance was critical to path development because the further distance the AGV needs to travel the longer time it takes. The more time the AGV spends traveling the less time it spends completing tasks and charging. It was an important consideration when figuring out AGV utilization. Important charging information was gathered from the AGV user manual (Eckhart, 2019) and is listed below in Table 2. Note that the power stored by the batteries is less than the power output of the charger due to battery internal resistance converting some of the 1000W charger output to heat. The charge efficiency was conservatively estimated at eighty percent and the efficiency of the charger itself is already factored in to the 1000W figure.

Maximum AGV Utilization Based on Maintaining Charge	
Max Continuous Charger Output (W)	1100
Conservative Continuous Charger Output (W)	1000
Battery Charge Efficiency Estimate (%)	80
Actual Stored Power by Batteries (W)	800
Assumed AGV Average Power Consumption (W)	250
Maximum Theoretical AGV Utilization (%)	76.2

Table 2 – Charging and Battery Information from AGV User Manual

Route Characteristics were critical to path development based on the recommended operating conditions of the AGV. The AGV has recommended surface smoothness for accurate Dead Reckoning Travel. Uneven floors and unexpected bumps can knock the AGV off course and even fault it out.

The final deliberation was how to configure the path with consideration to successive Tiers (II and III). Developing overlapping paths between all tiers serves two purposes. The first is that when moving up in tiers the additional route programming acts as a simple addition to the existing route programming via a branch off from a shared point. Secondly, it allows evaluation locations to be set up at shared points. After a job is completed, the AGV can "listen" for any other job requests and then re-route to those locations without having to travel all the way home.

Programming Guide

Route 1		Route 1		Route 1	
Route	1	Route	1	Route	1
Step	1	Step	2	Step	3
STEP INITIATION		**STEP INITIATION**		**STEP INITIATION**	
Go Mode	Input Triggers	Go Mode	Auto	Go Mode	Auto
Radio Input	Radio #1 "Ford"	Radio Input	N/A	Radio Input	N/A
Home RFID	Radio #2 "Bin Full"				
Hard Wire Input	N/A	Hard Wire Input	N/A	Hard Wire Input	N/A
BIT	Bit #1 On Bit #2 On	BIT	N/A	BIT	N/A
STEP ACTION		**STEP ACTION**		**STEP ACTION**	
Function	Dispatch	Function	Forward	Function	Rotate
Speed	N/A	Speed	33	Speed	33
Navigation	N/A	Navigation	DR	Navigation	DR
Direction	N/A	Direction	Center	Direction	N/A
Size	N/A	Size	66	Size	-90
Loss Of Guidance	N/A	Loss Of Guidance	N/A	Loss Of Guidance	N/A
Obstacle Avoidanc	N/A	Obstacle Avoidance	1	Obstacle Avoidance	1
Output	N/A	Output	N/A	Output	N/A
END OF STEP		**END OF STEP**		**END OF STEP**	
END MODE	N/A	END MODE	Distance	END MODE	Distance
END ACTION	Merge Bit #1 off	END ACTION	Merge	END ACTION	Merge
NEXT ROUTE	1	NEXT ROUTE	1	NEXT ROUTE	1
NEXT STEP	2	NEXT STEP	3	NEXT STEP	4

Table 3 – Sample Programming Step Guide

Shown above in Table 3, is the AGV programming step guide. The AGV manual we received listed this as the best way to organize and understand the processes occurring within each step of routes. This presentation style mimics how the steps appear on the Human Machine Interface

(HMI) of the AGV. Steps can be added or edited on the HMI directly or by using software from the manufacturer, which we did not have access to.

First thing that must be done is defining the name of the current route and step. Next, one must decide on the go mode. The go mode represents which input conditions must be met before the AGV can start the step. In R1: S1, the go mode is “input triggers”. This means that the AGV will only start when it receives these defined inputs. In this case, the input triggers are Radio frequency from a cell requesting parts (output shaft cell), a radio frequency from the pre-loaded bin area confirming a full bin of parts is ready to deliver and BIT #1 and #2 being on. The other most common Go Mode we utilized was Auto. Auto is used when you want the step to start automatically after completion of the previous.

The next thing to determine is what function you want the AGV to perform. Dispatch function is what you use when the AGV needs to make a decision. In R1:S1 the decision is to continue doing nothing or move to the next step. Other functions we utilized were Forward, Reverse, Rotate and Delay. These functions do exactly as their names indicate. All functions that involve motion have a speed parameter that can be adjusted. The AGV maintains this speed the entire length of the step. The speed parameter is useful when you want the AGV to change its speed at intersections or cart connection.

The navigational method the AGV follows is defined next. This brand of AGV has 3 separate Navigation styles; the first is to follow magnetic floor tape, next is to follow GPS coordinates, and the final style is called Dead Reckoning. We elected to use Dead Reckoning for a majority our path. Dead Reckoning relies on the AGVs drive motor encoders to monitor travel distance of each of the two wheels independently with minimum overwatch.

The next determination is direction. Direction has no impact on Dead Reckoning when navigation is set to center. When navigation is set to magnetic floor tape, direction can be right, left, or center depending on which direction you want the AGV to follow the tape at intersections.

Size determines the magnitude of the function. For forward and reverse, size is distance traveled in inches. For rotate, positive size is degrees of rotation counterclockwise. For delay, size is the duration in seconds the AGV idles.

When magtape is the navigation style, loss of guidance is used to determine how far the AGV will travel after it loses connection with the tape. This is for handling situations where sections of tape have been torn up.

Obstacle Avoidance deals with the sensitivity of the light sensors when the AGV is in motion. The higher the level the more sensitive the AGV is to objects in its path.

Output deals with any of the output capabilities the AGV possesses. For example, we used our Pin Up and Pin Down outputs to engage the AGV with carts. AGV outputs that are on by default are Safety Sound Speaker and the Blue Safety Spotlight.

End Mode helps the AGV determine what constitutes the end of the current step. Most steps involving a motion function will utilize the distance end mode. When size magnitude of the step has been reached, the step ends. For steps with delay functions, the end mode utilized is time.

End Action is what the AGV does upon completing the step. Options for End Action are turning inputs off and merging to next step.

Next Route and Next Step define the next route and step you want the AGV to do. They do not have to be in numerical order. This is especially handy when adding steps into code that has already been created, such as R1:S1 next R1:S3 next R1:S4.

Safety

Safety is the always the biggest concern when using automated machinery. An AGV is less dangerous than an automated robot cell, but not completely harmless. Because of this we elected to make use of as many on board safety features as we could.

The first feature we enabled is laser light sensors on the front and rear of the AGV. These light sensors have adjustable tolerance ranges. According to the AGV user manual, they can be set to level 1, level 2, or level 3, corresponding to 9-foot detection, 6-foot detection, or 3-foot detection, respectively. These ranges allow us to monitor for obstacles and control what makes the AGV stop.

The next feature enabled is the Alarm. This feature is simply a speaker that continuously plays a loud beep when the AGV is in operation. This feature is highly effective in facilities with lots of

background noise. The Alarm does not have the ability to E-Stop or Collision Fault the AGV but instead gives people working on the shop floor a heads up on the location of the AGV.

The final safety features we are using are blue spotlights positioned at the front and the back of the AGV. This blue spotlight shines approximately 15 ft in front of the AGV and is a feature we also use with our forklifts in the plant. It aims to give workers on the floor a heads up of the incoming vehicle.

On top of the features listed above, the AGV also has additional features which contribute to its overall safety, including low ground clearance, speed limits, motor output limits E-stop, and navigation loss E-stop.

In the development of our three-tiered proposal, there were certain aspects of the AGV system that needed to be modified from a standard size to fit our specific applications. These modifications were in the form of cart inserts as shown below in Figure 5 and Figure 6 (dimensions removed to follow company confidentiality policies), and they were developed according to the Y14.5 standard for geometric dimensioning and tolerancing. This standard allows for clear, concise drawings and models to be understood fully by all who are aware of the standard. In this instance, the main audience for these drawings are the fabricators who will make the final product to be used in the AGV system. The more the standard is followed, the better the chance there is to receive exactly what you want for your design.

In addition to following this standard, the designed components must be extremely simple to make for keeping costs low and durable to withstand years of production use and loading/unloading by tow motors. The weight of these components has little bearing on the design due to the weight limit of the AGV and accompanying cart being far from their maximum values, even when fully loaded with parts. This contributed to a very robust design being adopted for the cart inserts in both Figure 5 and Figure 6.

The culmination of all these features results in a very safe piece of equipment with minimal concerns to operate on a manufacturing floor around associates.

Tier I Implementation: Output Shaft Process + AGV Repair

Tier I: Current Assessment: Output Shaft

With the addition of a fully automated robot bin pick system and over 25 machines linked together with automation, the Output shaft line is one of the most state-of-the-art lines in the facility. Despite this, it still faces one of the most common issues, down time. Most of the down time on the output shaft line is associated with the initial operations being starved for parts. With current forklift operation above 100%, this line experiences starvation when the part bins need changing. The average response time of a forklift to a "Parts call" is nearly 15 minutes. When the parts do arrive, size limitations at the entrance of the robotic bin pick cell force the operators to manually replace bins within the cell using a floor jack. Even with safety features in place, placing operators unnecessarily within a high-speed robot cage multiple times a shift is not a good practice.

The initial operation of the output shaft is four identical machines that can each produce 22 parts per hour, for a total production of 88 parts an hour. A single forging tub contains 120 forgings and requires changing 5.8 times per shift. This converts to roughly 17 tub changes per day. To do this calculation we took the number of hours in a shift and divided by the result of the bin quantity divided by hourly rate and multiplied by 3 shifts per day to get tubs a day as later demonstrated in Table 14.

Tier I: Process Improvement Value

The process improvement value that AGV implementation is expected to achieve in Tier I is mostly to reduce instances that first operation machines are starved for parts and a slight reduction in plant-wide tow motor utilization. With the addition of an AGV dedicated to handling the supply parts for these first operation machines, we can expect the 17 tub changes per day to remain the same, but the average response time to the "Parts Call" being reduced. The tow motor utilization decrease will be a small change that is hard to quantify, but will be a factor, nonetheless.

Introducing the AGV has the impact of also reducing the workload of the operators at the cell. Because of the lower profile and zero turn capability, the AGV will be able to enter the bin pick cell and exchange carts on its own. Operators will no longer need to manually exchange forging bins with pallet jacks.

Tier I: Installation Cost

Number	Description	Price	Lvl1	Total
1	RFID Position Markers	$35.00	1	$35.00
2	Radio Transmitter	$1,300.00	3	$3,900.00
3	Full Build Cart	$5,250.00	0	$0.00
4	Motor controller	$2,300.00	1	$2,300.00
5	Eckhart Repair	$6,000.00	1	$6,000.00
6	Cart Insert 1	$700.00	3	$2,100.00
7	Cart Insert 2	$1,200.00	0	$0.00
8	Cart Insert 3	$700.00	0	$0.00
9	Cart Floor Guide	$100.00	4	$400.00
10	Tech Install Labor Hr	$180.00	64	$11,520.00
11				$0.00
12				$0.00
		Material Cost	Lvl1	$26,255.00

Table 4 – Cost Breakdown of Tier I

Included in the installation cost of Tier I is repairs made to the AGV. Evaluation and labor cost of a professional fall into this category and are roughly $6,000. The repair quote and itemized, detailed breakdown we received is not shared in this document due to company confidentiality policies. Replacement parts needed for this repair were a motor controller and a few other minor electrical components.

Installation costs also include outfitting three carts with Cart Insert style 1. Cart insert style 1 is a fixture we designed to ensure consistent bin location on the cart. It is required to have repeatable bin and cart location within the bin pick cell for the robot's camera to effectively see and target forgings. An added feature to this is certainty that AGV motion along travel path or unintended collisions do not upset the even weight distribution of the bin on the cart. The quote to fabricate these was $700.00 and a part drawing is located below in Figure 5.

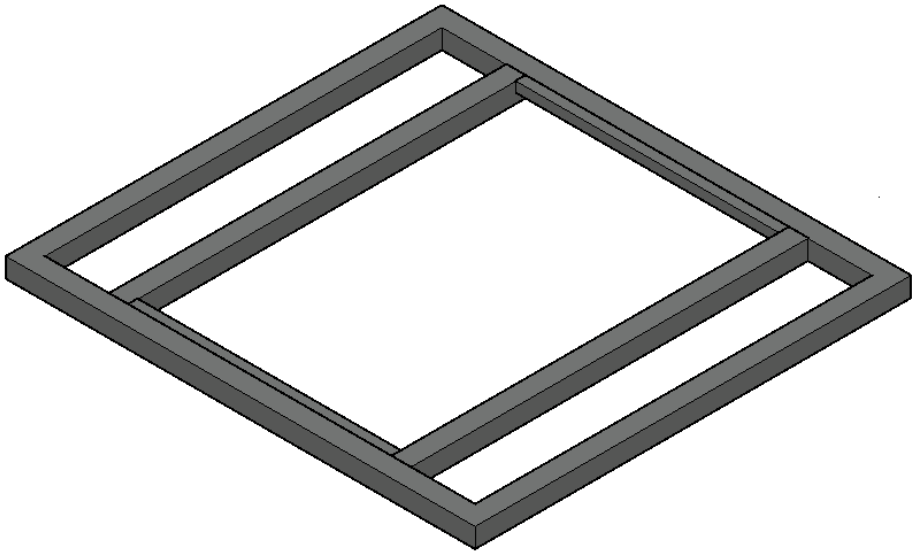

Figure 5 – Cart Insert Used for Tier I Process

The final large purchase associated with Tier I installation is the Radio Transmitter being placed at the Bin pick cell. This Radio transmitter is necessary for communication with the AGV. It is responsible for sending the "Part Request" signal to the AGV. The quote for purchase of this item is $1,300 per unit.

Making up 45% of the total cost of Tier I installation is the allocation of funds for paying technicians/ maintenance to set up the automatic charging station and other technical work. We estimate that it will take 2 trained technicians 64 hours to complete the installation.

In total, the cost of implementing Tier I comes in at $26,255. This price was reached from evaluating the cost of new equipment, labor, repairs, modifications to existing equipment as shown above in Table 4.

Tier I: Integration

The main integration in Tier I is how the AGV will interact with its delivery destination. The AGV itself has its own home position. At the home position it engages with the auto charger and waits for commands. The commands it is expecting are either "carts loaded" or "need parts". The "need parts" command comes from a radio transmitter at the robot cell and the "carts loaded" command comes from radio transmitters located beside the area for loading the carts.

Tier I: Program Script

See Appendix – A for complete Tier I Programming Guide

See Appendix – D for Complete List of I/O and Bits

Statistics for the routes covered in Tier I are listed below in Table 5.

Tier 1	Time (s)	Max Frequency/Shift
Routes 1 & 2	647	5.8
Total Time/Shift (s)	3755	
AGV Utilization	13.0%	

Table 5 – Tier I Route Information

Tier I: TOTAL

Tier I has many benefits to implementation, but they are hard to quantify and measure using traditional means. For instance, with a reduction in tow motor utilization there will be a decrease in downtime throughout the facility without any one specific area getting a major improvement from before to after. For this reason and to maintain conservative estimates, the monetary calculations of implementing Tier I do not factor in a savings for the facility. Here are calculations for the payback period and return on investment for Tier I.

Step 1 Savings Per Year										
	Year 1	Year 2	Year 3	Year 4	Year 5	Year 6	Year 7	Year 8	Year 9	Year 10
Manual Worker - Yearly Labor Cost	$ -	$ -	$ -	$ -	$ -	$ -	$ -	$ -	$ -	$ -
Manual Worker - Cumulative Labor Cost	$ -	$ -	$ -	$ -	$ -	$ -	$ -	$ -	$ -	$ -
Yearly Equipment Reduction Savings	$ -	$ 2,000.00	$ 2,000.00	$ 2,000.00	$ 2,000.00	$ 2,000.00	$ 2,000.00	$ 2,000.00	$ 2,000.00	$ 2,000.00
Cumulative Equipment Reduction Savings	$ -	$ 2,000.00	$ 4,000.00	$ 6,000.00	$ 8,000.00	$ 10,000.00	$ 12,000.00	$ 14,000.00	$ 16,000.00	$ 18,000.00
Yearly AGV Cost	$ 26,255.00	$ 2,000.00	$ 2,000.00	$ 2,000.00	$ 2,000.00	$ 2,000.00	$ 2,000.00	$ 2,000.00	$ 2,000.00	$ 2,000.00
Cumulative AGV Cost	$ 26,255.00	$ 28,255.00	$ 30,255.00	$ 32,255.00	$ 34,255.00	$ 36,255.00	$ 38,255.00	$ 40,255.00	$ 42,255.00	$ 44,255.00
Annual Savings	$ (26,255.00)	$ -	$ -	$ -	$ -	$ -	$ -	$ -	$ -	$ -
Total Savings Over Robot Life	$ (26,255.00)	$ (26,255.00)	$ (26,255.00)	$ (26,255.00)	$ (26,255.00)	$ (26,255.00)	$ (26,255.00)	$ (26,255.00)	$ (26,255.00)	$ (26,255.00)
Payback Period:	-13.13									
Return on Investment (ROI)	-17.6%									

Table 6 – Cost Analysis for Tier I

As demonstrated in Table 6, both the payback period and the return on investment are negative values due to being conservative with our estimates and not inputting a savings by implementing this system. The implementation of Tier I is therefore not in the best financial interest of the company to implement by itself.

Tier II Implementation: Input Shaft + Tier I

Tier II Additional Equipment

To implement Tier II there will be a required investment in additional equipment. This full list of equipment includes fabrication of more standard carts, cart inserts to adapt the standard cart to the specific needs of our input shaft, and additional radio units to enable communication between the AGV and operators at the new destination points of the AGV. A complete list of the necessary additional parts and their costs for implementing Tier II is located below in Table 8. The approved drawing of the cart insert required to utilize standardized carts for our input shafts is located below in Figure 6.

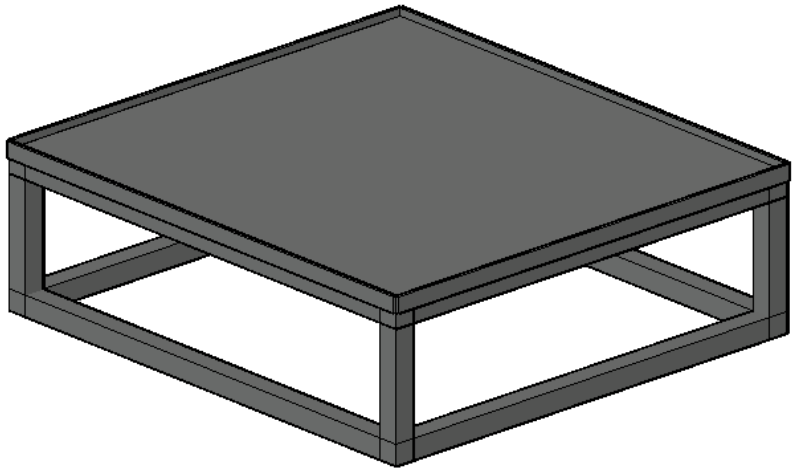

Figure 6 – Tier II Cart Insert

Tier II: Current Assessment Input Shaft

This input shaft part process is the most involved process within our facility for the tow motor drivers as there are multiple locations that require the frequent moving of parts to ensure production does not stop due to being starved for parts. At current rates, all 3 locations must be tended to by the tow motor driver more than once an hour. This scenario is the largest cause of the current tow motor driver being over utilized and a proposition to hire an additional tow motor driver has been proposed to bring total utilization to under 100% and reduce all downtime caused by the current overutilization issue.

Tier II: Process Improvement Value

The primary value of implementing Tier II is that once implemented, the utilization of the current tow motor driver will fall under 100%. This will result in no longer having a need to hire an additional driver and saving the company the labor cost of 1 person per shift and the purchase of an additional tow motor for the new driver. Both savings would be immediate upon the implementation of Tier II, but the savings of labor will be continuous for the life of the AGV. The amounts of these savings are listed below in Table 7.

Savings	
New Electric Forklift	$30,000.00
Savings per person	$60,000.00
Shifts per day	3
Total Yearly Savings	$180,000.00

Table 7 – Savings for Tier II

Tier II: Installation Cost

Number	Description	Price	Quantity			
			Lvl1	Total	Lvl2	Total
1	RFID Position Markers	$35.00	1	$35.00	0	$0.00
2	Radio Transmitter	$1,300.00	3	$3,900.00	6	$7,800.00
3	Full Build Cart	$5,250.00	0	$0.00	5	$26,250.00
4	Motor controller	$2,300.00	1	$2,300.00	0	$0.00
5	Eckhart Repair	$6,000.00	1	$6,000.00	0	$0.00
6	Cart Insert 1	$700.00	3	$2,100.00	0	$0.00
7	Cart Insert 2	$1,200.00	0	$0.00	10	$12,000.00
8	Cart Insert 3	$700.00	0	$0.00	0	$0.00
9	Cart Floor Guide	$100.00	4	$400.00	6	$600.00
10	Tech Install Labor Hr	$180.00	64	$11,520.00	80	$14,400.00
11				$0.00		$0.00
12				$0.00		$0.00
		Material Cost	Lvl1	$26,255.00	Lvl2	$87,305.00
					Lvl2-Lvl1	$61,050.00

Table 8 – Cost Breakdown of Tier II

Tier II has additional costs on top of the installation costs discussed in Tier I. Much of those costs are in additional equipment as shown in Table 8. For Tier II to function as planned, additional carts need to be purchased to move the new volume of material. Tier II needs an additional 5 carts. A single build cart costs $5,250. In total, $26,250 is the expected cost to outfit the operation. This cost makes up nearly 46% of the installation cost associated with the adding of Tier II.

Another larger equipment cost associated with Tier II is the purchase of 10 Style 2 Cart Inserts shown previously in Figure 6. Currently the small carts being used at this process are not compatible to the AGV platform. Using the large built-for-AGV carts with an added insert is the simplest way to set the process. Each insert costs $1,200. Total cost associated with purchasing these cart inserts is $12,000. It is worth mentioning that the large carts can hold double the number of parts that the smaller original ones can hold.

The last big equipment cost is the radio transmitters needed to link the new pick up and drop off locations to the AGV. Without these additional transmitters, the AGV will have no inputs telling it which job to do. The cost for a single radio transmitter is $1,300 and the process needs 6. Total cost for radio transmitters in Tier II is $7,800.

The only cost for Tier II that is not equipment related is the expected tech labor for installation. With the hourly cost of this tech being $180, and an expected install time of 80 hours, the total cost for putting the pieces together is $14,400.

Specifically speaking about Tier II on its own, the cost of installation/ upgrade is $61,050. Cumulative costs in the process thus far are Tier I + Tier II = $87,305.

Tier II: Integration

Like mentioned earlier in the installation cost section, 6 additional radio transmitters are needed to “call for parts”. These will be used to direct the AGV to jobs. For Tier II, the AGV does not interact with any machining cell like it does in Tier I. When called, it takes a cart to a location or picks up a cart at a location.

Tier II: Program Script

See Appendix – B for complete Tier II Programming Guide.

See Appendix – D for Complete List of I/O and Bits

Statistics for the routes covered in Tier II are listed below in Table 9.

Tier 2	Time (s)	Max Frequency/Shift
Routes 1 & 2	647	5.8
Route 3	744	4.4
Route 4	699	4.4
Route 5	642	4.4
Total Time/Shift (s)	12928	
AGV Utilization	44.9%	

Table 9 – Tier II Route Information

Tier II: Total

Tier II has shown to be much easier to quantify and measure benefits using traditional means when compared to Tier I and ends up being extremely beneficial to implement. This is readily apparent by the large amounts of savings every year, very short payback period, and large ROI as shown below in Table 10. Tier II is therefore now a very appealing option for using this AGV.

Step 2 Savings Per Year										
	Year 1	Year 2	Year 3	Year 4	Year 5	Year 6	Year 7	Year 8	Year 9	Year 10
Manual Worker - Yearly Labor Cost	$ 180,000.00	$180,000.00	$180,000.00	$ 180,000.00	$180,000.00	$ 180,000.00	$ 180,000.00	$ 180,000.00	$ 180,000.00	$ 180,000.00
Manual Worker - Cumulative Labor Cost	$ 180,000.00	$360,000.00	$540,000.00	$ 720,000.00	$900,000.00	$1,080,000.00	$1,260,000.00	$1,440,000.00	$1,620,000.00	$1,800,000.00
Yearly Equipment Reduction Savings	$30,000.00	$2,000.00	$2,000.00	$2,000.00	$2,000.00	$2,000.00	$2,000.00	$2,000.00	$2,000.00	$2,000.00
Cumulative Equipment Reduction Savings	$30,000.00	$32,000.00	$34,000.00	$36,000.00	$38,000.00	$40,000.00	$42,000.00	$44,000.00	$46,000.00	$48,000.00
Yearly AGV Cost	$ 87,305.00	$ 2,000.00	$ 2,000.00	$ 2,000.00	$ 2,000.00	$ 2,000.00	$ 2,000.00	$ 2,000.00	$ 2,000.00	$ 2,000.00
Cumulative AGV Cost	$ 87,305.00	$ 89,305.00	$ 91,305.00	$ 93,305.00	$ 95,305.00	$ 97,305.00	$ 99,305.00	$ 101,305.00	$ 103,305.00	$ 105,305.00
Annual Savings	$ 122,695.00	$180,000.00	$180,000.00	$ 180,000.00	$180,000.00	$ 180,000.00	$ 180,000.00	$ 180,000.00	$ 180,000.00	$ 180,000.00
Total Savings Over Robot Life	$ 122,695.00	$302,695.00	$482,695.00	$ 662,695.00	$842,695.00	$1,022,695.00	$1,202,695.00	$1,382,695.00	$1,562,695.00	$1,742,695.00
Payback Period:	0.42									
Return on Investment (ROI)	228.2%									

Table 10 – Cost Analysis for Tier II

Tier III Implementation: Scrap Material Handling + Tiers I and II

Tier III: Additional Equipment

To implement Tier III there will be a significant investment into additional equipment required. The full list of equipment includes fabrication of over a dozen of the standard carts with corresponding cart inserts (the bins used for scrap material handling are identical, except in color, to the forging bins used for our output shaft and therefore uses an identical cart insert as well) and over a dozen additional radio units to enable communication between the AGV and every one of the new destination points of the AGV. A complete list of the necessary additional parts and their costs for implementing Tier III is located below in Table 11. The approved drawing of the cart insert required to utilize standardized carts for our input shafts is located above in Figure 5.

Tier III: Current Assessment

The current scrap material handling area within our facility is not able to be fully utilized using the current method of tow motor load and unload due to the comparatively large size and large turning radius associated with a full-size tow motor. This often results in the scrap material area overflowing into the immediate surrounding area during shift changes when associates bring in their designated scrap carts. An overview of the scrap area reveals that this could be remedied with a more efficient use of the current space that cannot be utilized with the current methods.

Tier III: Process Improvement Value

The expected process improvement value of AGV implementation for Tier III is centered on the ability to utilize the current allotted space more efficiently. By automating the scrap material bins with an AGV it is possible to make better use of the area and have enough room left over to allow for the associate scrap carts to not overflow into the remaining area, all while maintaining the same total number of bins.

Introducing the AGV for Tier III will very minimally affect the workload involved in the removal and replacement of the scrap material bins due to the bins filling infrequently and a different department than the tow motor driver affected by Tiers I and II having the responsibility to perform the task.

Tier III: Installation Costs

Cost Sheet									
Number	Description	Price	Quantity						Total Purchase Quantity
			Lvl1	Total	Lvl2	Total	Lvl3	Total	Lvl1,Lvl2,Lvl3
1	RFID Position Markers	$35.00	1	$35.00	0	$0.00	0	$0.00	1
2	Radio Transmitter	$1,300.00	3	$3,900.00	6	$7,800.00	14	$18,200.00	23
3	Full Build Cart	$5,250.00	0	$0.00	5	$26,250.00	14	$73,500.00	19
4	Motor controller	$2,300.00	1	$2,300.00	0	$0.00	0	$0.00	1
5	Eckhart Repair	$6,000.00	1	$6,000.00	0	$0.00	0	$0.00	1
6	Cart Insert 1	$700.00	3	$2,100.00	0	$0.00	0	$0.00	3
7	Cart Insert 2	$1,200.00	0	$0.00	10	$12,000.00	0	$0.00	10
8	Cart Insert 3	$700.00	0	$0.00	0	$0.00	14	$9,800.00	14
9	Cart Floor Guide	$100.00	4	$400.00	6	$600.00	14	$1,400.00	24
10	Tech Install Labor Hr	$180.00	64	$11,520.00	80	$14,400.00	112	$20,160.00	256
11				$0.00		$0.00		$0.00	0
12				$0.00		$0.00		$0.00	0
		Material Cost	Lvl1	$26,255.00	Lvl2	$87,305.00	Lvl3	$210,365.00	
					Lvl2-Lvl1	$61,050.00	Lvl3-Lvl2	$123,060.00	

Table 11 – Cost Breakdown of Tier III

Tier III has by far the highest installation costs of all tiers due to the large amount of additional equipment required to implement as demonstrated in Table 11. The scrap material handling area contains twelve separate bins for different types of materials and our plan includes two empty carts to swap in when the carts become full. This totals to fourteen carts with accompanying inserts and radio transmitters.

Tier III: Integration

Tier III does not interact with any machining cell. But it does interact with 12 different radio transmitters within the scrap area and 2 radio transmitters in the shipping area. These transmitters are used to dispatch the AGV to the correct scrap bin for removal.

Tier III: Program Script

See Appendix – C for complete Tier III Programming Guide.

Statistics for the routes covered in Tier III are listed below in Table 12.

See Appendix – D for Complete List of I/O and Bits

Tier 3	Time (s)	Max Frequency/Shift
Routes 1 & 2	647	5.8
Route 3	744	4.4
Route 4	699	4.4
Route 5	642	4.4
Routes 6 - 29	820	2
Total Time/Shift (s)	14567	
AGV Utilization	50.6%	

Table 12 – Tier III Route Information

Tier III: Total

Tier III does not offer the same quantifiable advantages as Tier II. What is does offer however is efficient floor space use while also improving the curb appeal of our scrap area. Organization in the scrap area is crucial for quality control and containment. When scrap and suspect material is not contained it could end up in the hands of the customer. Shown below in Table 13 are the calculations for savings, payback period, and return on investment for Tier III. It is important to note that because Tier III is a combination of subsequential Tiers, all of the savings shown originated from Tier II and is proven by the values all being reduced from the savings shown in Tier II.

Step 3 Savings Per Year										
	Year 1	Year 2	Year 3	Year 4	Year 5	Year 6	Year 7	Year 8	Year 9	Year 10
Manual Worker - Yearly Labor Cost	$180,000.00	$180,000.00	$180,000.00	$180,000.00	$180,000.00	$180,000.00	$180,000.00	$180,000.00	$180,000.00	$180,000.00
Manual Worker - Cumulative Labor Cost	$180,000.00	$360,000.00	$540,000.00	$720,000.00	$900,000.00	$1,080,000.00	$1,260,000.00	$1,440,000.00	$1,620,000.00	$1,800,000.00
Yearly Equipment Reduction Savings	$30,000.00	$2,000.00	$2,000.00	$2,000.00	$2,000.00	$2,000.00	$2,000.00	$2,000.00	$2,000.00	$2,000.00
Cumulative Equipment Reduction Savings	$30,000.00	$32,000.00	$34,000.00	$36,000.00	$38,000.00	$40,000.00	$42,000.00	$44,000.00	$46,000.00	$48,000.00
Yearly AGV Cost	$210,365.00	$2,000.00	$2,000.00	$2,000.00	$2,000.00	$2,000.00	$2,000.00	$2,000.00	$2,000.00	$2,000.00
Cumulative AGV Cost	$210,365.00	$212,365.00	$214,365.00	$216,365.00	$218,365.00	$220,365.00	$222,365.00	$224,365.00	$226,365.00	$228,365.00
Annual Savings	-$365.00	$180,000.00	$180,000.00	$180,000.00	$180,000.00	$180,000.00	$180,000.00	$180,000.00	$180,000.00	$180,000.00
Total Savings Over Robot Life	$ (365.00)	$179,635.00	$359,635.00	$ 539,635.00	$719,635.00	$ 899,635.00	$1,079,635.00	$1,259,635.00	$1,439,635.00	$1,619,635.00
Payback Period:	1.01									
Return on Investment (ROI)	88.9%									

Table 13 – Cost Analysis for Tier III

Summarization of Proposal

Data collected within the facility allowed the development of an overall assessment of exactly how many times each area will need to be serviced by the AGV each shift and therefore exactly how many times the AGV will be running each route in eight hours. This precise data is confidential to the facility, but a snippet of the most important data used to calculate this data is shown below in Table 14.

Frequency Data				
	Parts/Hour	Machine Quantity	Parts/Cart	Bins/Shift
Routes 1 & 2	22	4	120	5.8
Route 3	30	5	272	4.4
Route 4	30	5	272	4.4
Route 5	30	5	272	4.4
Routes 6 - 29	N/A	N/A	N/A	2

Table 14 – Summary of Route Frequencies

To gather the timings for each route the AGV will be completing, data needed to be collected from the programming guide to determine exactly how far each route is and the exact number of turns and pin movement events. This data and the calculated total time to fully complete each route is found below in Table 15.

Route Data				
	Distance (ft)	Number of Turns	Number of Pin Movements	Total Time (s)
Routes 1 & 2	1286	31	8	647
Route 3	1640	26	2	744
Route 4	1588	18	2	699
Route 5	1429	20	2	642
Routes 6 - 29	1709	32	8	820

Table 15 – Total Route Timings

An overview of the total cost of each Tier as well as the potential savings considered for Tier II and beyond are show here in Table 16.

Assumed Costs				Savings	
Total Cost to Build Plan 1	$ 26,255.00			New Electric Forklift	$30,000.00
Total Cost to Build Plan 2	$ 87,305.00			Savings per person	$60,000.00
Total Cost to Build Plan 3	$ 210,365.00			Shifts per day	3
Yearly Maintenance (AGV and Forklift)	$ 2,000.00			Total Yearly Savings	$180,000.00

Table 16 – Summarization of Costs and Savings

To put the routes of the AGV into a better perspective, the routes are shown here in Figure 7 to scale with the rest of the facility. Tier II includes the green and blue lines and similarly, Tier III includes the red, green, and blue lines.

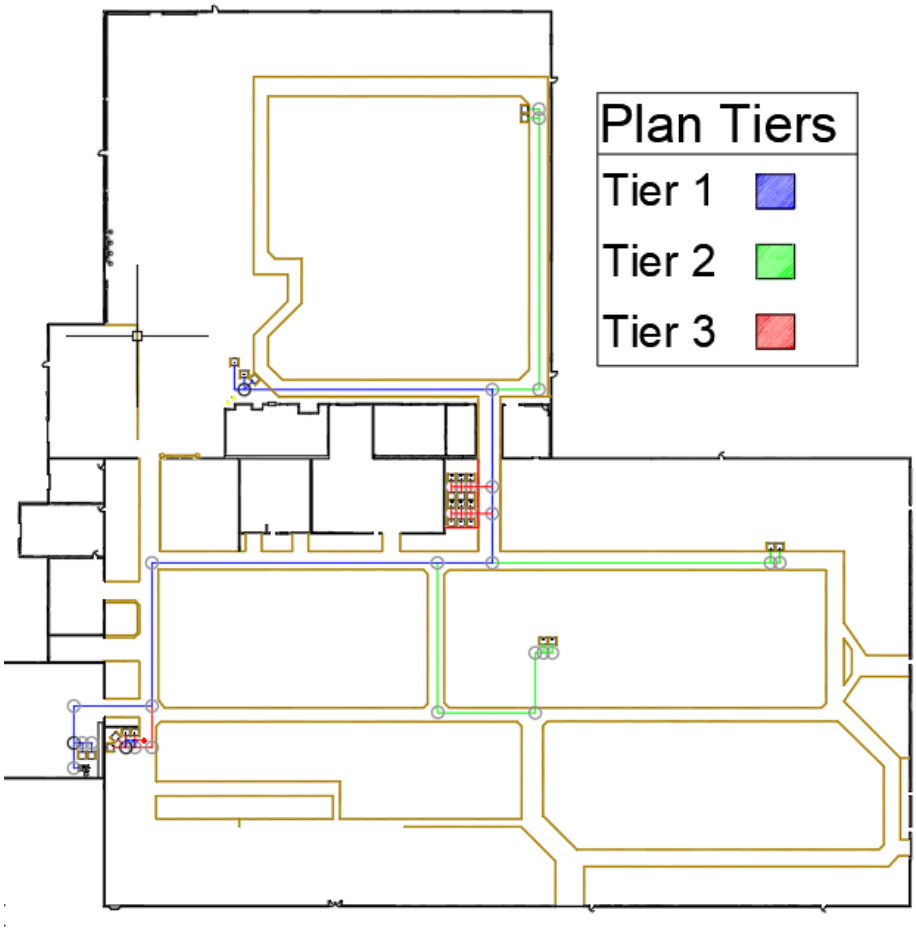

Figure 7 – Paths with Respect to Entire Facility

Conclusion

From our findings, the implementation tier we would recommend to AAM is Tier II. Tier II utilizes the AGV for the part processes of both an output shaft and input shaft and would take the tow motor driver utilization of the facility below the 100% threshold and save the company the expense of hiring a driver for 3 shifts a day and buying the new driver a new tow motor. These savings are demonstrated to be excellent in Table 10 by the payback period of less than half a year with an ROI of over 200%. Tier III appears to also offer a large deal of savings, but due to the marginal benefits over Tier II and the vast amount of complexity added by also utilizing the AGV for this Tier, it is not a worthwhile investment at this time. Therefore, Tier II is the best option for the current needs of the facility and is shown in a simplified view below in Figure 8.

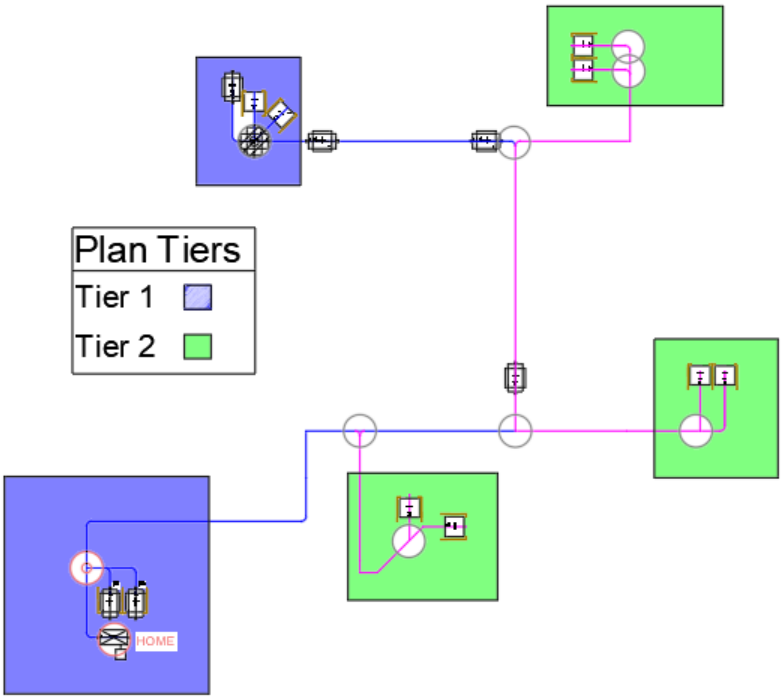

Figure 8 – Simplified View of Tier II Proposal

References

- Eckhart. (2019). TD5000 AGV Complete User Manual and Operational Guide. Warren, MI

Appendices

Appendix – A

Tier 1 Route 1

Route 1		Route 1		Route 1		Route 1		Route 1		Route 1		Route 1		Route 1	
Route	1	Route	1	Route	1	Route	1	Route	1	Route	1	Route	1	Route	1
Step	1	Step	2	Step	3	Step	4	Step	5	Step	6	Step	7	Step	8
STEP INITIATION		**STEP INITIATION**		**STEP INITIATION**		**STEP INITIATION**		**STEP INITIATION**		**STEP INITIATION**		**STEP INITIATION**		**STEP INITIATION**	
Go Mode	Input Triggers	Go Mode	Auto	Go Mode	Auto	Go Mode	Auto	Go Mode	Auto	Go Mode	Auto	Go Mode	Auto	Go Mode	Auto
Radio Input	Radio #1 "Ford"	Radio Input	N/A	Radio Input	N/A	Radio Input	N/A	Radio Input	N/A	Radio Input	N/A	Radio Input	N/A	Radio Input	N/A
Home RFID	Radio #2 "Bin Full"														
Hard Wire Input	N/A	Hard Wire Input	N/A	Hard Wire Input	N/A	Hard Wire Input	N/A	Hard Wire Input	N/A	Hard Wire Input	N/A	Hard Wire Input	N/A	Hard Wire Input	N/A
BIT	Bit #1 On Bit #2 On	BIT	N/A	BIT	N/A	BIT	N/A	BIT	N/A	BIT	N/A	BIT	N/A	BIT	N/A
STEP ACTION		**STEP ACTION**		**STEP ACTION**		**STEP ACTION**		**STEP ACTION**		**STEP ACTION**		**STEP ACTION**		**STEP ACTION**	
Function	Dispatch	Function	Forward	Function	Rotate	Function	Forward	Function	Rotate	Function	Reverse	Function	Rotate	Function	Reverse
Speed	N/A	Speed	33	Speed	33	Speed	33	Speed	33	Speed	33	Speed	33	Speed	33
Navigation	N/A	Navigation	DR	Navigation	DR	Navigation	DR	Navigation	DR	Navigation	DR	Navigation	DR	Navigation	DR
Direction	N/A	Direction	Center	Direction	N/A	Direction	Center	Direction	N/A	Direction	Center	Direction	N/A	Direction	Center
Size	N/A	Size	66	Size	-90	Size	168	Size	90	Size	120	Size	-90	Size	84
Loss Of Guidance	N/A	Loss Of Guidance	N/A	Loss Of Guidance	N/A	Loss Of Guidance	N/A	Loss Of Guidance	N/A	Loss Of Guidance	N/A	Loss Of Guidance	N/A	Loss Of Guidance	N/A
Obstacle Avoidance	N/A	Obstacle Avoidance	1	Obstacle Avoidance	1	Obstacle Avoidance	1	Obstacle Avoidance	1	Obstacle Avoidance	1	Obstacle Avoidance	1	Obstacle Avoidance	1
Output	N/A	Output	N/A	Output	N/A	Output	N/A	Output	N/A	Output	N/A	Output	N/A	Output	#6- Pin Up
END OF STEP		**END OF STEP**		**END OF STEP**		**END OF STEP**		**END OF STEP**		**END OF STEP**		**END OF STEP**		**END OF STEP**	
END MODE	N/A	END MODE	Distance	END MODE	Distance	END MODE	Distance	END MODE	Distance	END MODE	Distance	END MODE	Distance	END MODE	Distance
END ACTION	Merge Bit #1 off	END ACTION	Merge	END ACTION	Merge	END ACTION	Merge	END ACTION	Merge	END ACTION	Merge	END ACTION	Merge	END ACTION	Merge
NEXT ROUTE	1	NEXT ROUTE	1	NEXT ROUTE	1	NEXT ROUTE	1	NEXT ROUTE	1	NEXT ROUTE	1	NEXT ROUTE	1	NEXT ROUTE	1
NEXT STEP	2	NEXT STEP	3	NEXT STEP	4	NEXT STEP	5	NEXT STEP	6	NEXT STEP	7	NEXT STEP	8	NEXT STEP	9

Route 1		Route 1		Route 1		Route 1		Route 1		Route 1		Route 1		Route 1	
Route	1	Route	1	Route	1	Route	1	Route	1	Route	1	Route	1	Route	1
Step	9	Step	10	Step	11	Step	12	Step	13	Step	14	Step	15	Step	16
STEP INITIATION		**STEP INITIATION**		**STEP INITIATION**		**STEP INITIATION**		**STEP INITIATION**		**STEP INITIATION**		**STEP INITIATION**		**STEP INITIATION**	
Go Mode	Input Triggers	Go Mode	Auto	Go Mode	Auto	Go Mode	Auto	Go Mode	Auto	Go Mode	Auto	Go Mode	Auto	Go Mode	Auto
Radio Input	N/A	Radio Input	N/A	Radio Input	N/A	Radio Input	N/A	Radio Input	N/A	Radio Input	N/A	Radio Input	N/A	Radio Input	N/A
Hard Wire Input	1- Cart Presence	Hard Wire Input	N/A	Hard Wire Input	N/A	Hard Wire Input	N/A	Hard Wire Input	N/A	Hard Wire Input	N/A	Hard Wire Input	N/A	Hard Wire Input	N/A
BIT	N/A	BIT	N/A	BIT	N/A	BIT	N/A	BIT	N/A	BIT	N/A	BIT	N/A	BIT	N/A
STEP ACTION		**STEP ACTION**		**STEP ACTION**		**STEP ACTION**		**STEP ACTION**		**STEP ACTION**		**STEP ACTION**		**STEP ACTION**	
Function	Delay	Function	Forward	Function	Rotate	Function	Forward	Function	Rotate	Function	Forward	Function	Rotate	Function	Forward
Speed	N/A	Speed	33	Speed	33	Speed	33	Speed	33	Speed	33	Speed	33	Speed	33
Navigation	DR	Navigation	DR	Navigation	DR	Navigation	DR	Navigation	DR	Navigation	DR	Navigation	DR	Navigation	DR
Direction	N/A	Direction	Center	Direction	N/A	Direction	Center	Direction	Center	Direction	Center	Direction	Center	Direction	Center
Size	3	Size	84	Size	90	Size	120	Size	-90	Size	248	Size	-90	Size	525
Loss Of Guidance	N/A	Loss Of Guidance	N/A	Loss Of Guidance	N/A	Loss Of Guidance	N/A	Loss Of Guidance	N/A	Loss Of Guidance	N/A	Loss Of Guidance	N/A	Loss Of Guidance	N/A
Obstacle Avoidance	1	Obstacle Avoidance	1	Obstacle Avoidance	1	Obstacle Avoidance	1	Obstacle Avoidance	1	Obstacle Avoidance	1	Obstacle Avoidance	1	Obstacle Avoidance	1
Output	#6- Pin Up	Output	#6- Pin Up	Output	#6- Pin Up	Output	#6- Pin Up	Output	#6- Pin Up	Output	#6- Pin Up	Output	#6- Pin Up	Output	#6- Pin Up
END OF STEP		**END OF STEP**		**END OF STEP**		**END OF STEP**		**END OF STEP**		**END OF STEP**		**END OF STEP**		**END OF STEP**	
END MODE	Time	END MODE	Distance	END MODE	Distance	END MODE	Distance	END MODE	Distance	END MODE	Distance	END MODE	Distance	END MODE	Distance
END ACTION	Merge	END ACTION	Merge	END ACTION	Merge	END ACTION	Merge	END ACTION	Merge	END ACTION	Merge	END ACTION	Merge	END ACTION	Merge
NEXT ROUTE	1	NEXT ROUTE	1	NEXT ROUTE	1	NEXT ROUTE	1	NEXT ROUTE	1	NEXT ROUTE	1	NEXT ROUTE	1	NEXT ROUTE	1
NEXT STEP	10	NEXT STEP	11	NEXT STEP	12	NEXT STEP	13	NEXT STEP	14	NEXT STEP	15	NEXT STEP	16	NEXT STEP	17

Route 1		Route 1		Route 1		Route 1		Route 1		Route 1		Route 1		Route 1	
Route	1	Route	1	Route	1	Route	1	Route	1	Route	1	Route	1	Route	1
Step	17	Step	18	Step	19	Step	20	Step	21	Step	22	Step	23	Step	24
STEP INITIATION		**STEP INITIATION**		**STEP INITIATION**		**STEP INITIATION**		**STEP INITIATION**		**STEP INITIATION**		**STEP INITIATION**		**STEP INITIATION**	
Go Mode	Auto	Go Mode	Auto	Go Mode	Auto	Go Mode	Auto	Go Mode	Auto	Go Mode	Auto	Go Mode	Auto	Go Mode	Auto
Radio Input	N/A	Radio Input	N/A	Radio Input	N/A	Radio Input	N/A	Radio Input	N/A	Radio Input	N/A	Radio Input	N/A	Radio Input	N/A
Hard Wire Input	N/A	Hard Wire Input	N/A	Hard Wire Input	N/A	Hard Wire Input	N/A	Hard Wire Input	N/A	Hard Wire Input	N/A	Hard Wire Input	N/A	Hard Wire Input	N/A
BIT	N/A	BIT	N/A	BIT	N/A	BIT	N/A	BIT	N/A	BIT	N/A	BIT	N/A	BIT	N/A
STEP ACTION		**STEP ACTION**		**STEP ACTION**		**STEP ACTION**		**STEP ACTION**		**STEP ACTION**		**STEP ACTION**		**STEP ACTION**	
Function	Rotate	Function	Forward	Function	Rotate	Function	Froward	Function	Rotate	Function	Forward	Function	Rotate	Function	Forward
Speed	33	Speed	33	Speed	33	Speed	33	Speed	33	Speed	33	Speed	33	Speed	33
Navigation	DR	Navigation	DR	Navigation	DR	Navigation	DR	Navigation	DR	Navigation	DR	Navigation	DR	Navigation	DR
Direction	Center	Direction	Center	Direction	Center	Direction	Center	Direction	Center	Direction	Center	Direction	Center	Direction	Center
Size	90	Size	962	Size	-90	Size	2284	Size	90	Size	1164	Size	90	Size	1665
Loss Of Guidance	N/A	Loss Of Guidance	N/A	Loss Of Guidance	N/A	Loss Of Guidance	N/A	Loss Of Guidance	N/A	Loss Of Guidance	N/A	Loss Of Guidance	N/A	Loss Of Guidance	N/A
Obstacle Avoidance	1	Obstacle Avoidance	1	Obstacle Avoidance	1	Obstacle Avoidance	1	Obstacle Avoidance	1	Obstacle Avoidance	1	Obstacle Avoidance	1	Obstacle Avoidance	1
Output	#6- Pin Up	Output	#6- Pin Up	Output	#6- Pin Up	Output	#6- Pin Up	Output	#6- Pin Up	Output	#6- Pin Up	Output	#6- Pin Up	Output	#6- Pin Up
END OF STEP		**END OF STEP**		**END OF STEP**		**END OF STEP**		**END OF STEP**		**END OF STEP**		**END OF STEP**		**END OF STEP**	
END MODE	Distance	END MODE	Distance	END MODE	Distance	END MODE	Distance	END MODE	Distance	END MODE	Distance	END MODE	Distance	END MODE	Distance
END ACTION	Merge	END ACTION	Merge	END ACTION	Merge	END ACTION	Merge	END ACTION	Merge	END ACTION	Merge	END ACTION	Merge	END ACTION	Merge
NEXT ROUTE	1	NEXT ROUTE	1	NEXT ROUTE	1	NEXT ROUTE	1	NEXT ROUTE	1	NEXT ROUTE	1	NEXT ROUTE	1	NEXT ROUTE	1
NEXT STEP	18	NEXT STEP	19	NEXT STEP	20	NEXT STEP	21	NEXT STEP	22	NEXT STEP	23	NEXT STEP	24	NEXT STEP	25

Route 1		Route 1		Route 1		Route 1		Route 1		Route 1		Route 1		Route 1	
Route	1	Route	1	Route	1	Route	1	Route	1	Route	1	Route	1	Route	1
Step	25	Step	26	Step	27	Step	28	Step	29	Step	30	Step	31	Step	32
STEP INITIATION		**STEP INITIATION**		**STEP INITIATION**		**STEP INITIATION**		**STEP INITIATION**		**STEP INITIATION**		**STEP INITIATION**		**STEP INITIATION**	
Go Mode	Auto	Go Mode	Auto	Go Mode	Auto	Go Mode	Auto	Go Mode	Auto	Go Mode	Auto	Go Mode	Auto	Go Mode	Auto
Radio Input	N/A	Radio Input	N/A	Radio Input	N/A	Radio Input	N/A	Radio Input	N/A	Radio Input	N/A	Radio Input	N/A	Radio Input	N/A
Hard Wire Input	N/A	Hard Wire Input	N/A	Hard Wire Input	N/A	Hard Wire Input	N/A	Hard Wire Input	N/A	Hard Wire Input	N/A	Hard Wire Input	N/A	Hard Wire Input	N/A
BIT	N/A	BIT	N/A	BIT	N/A	BIT	N/A	BIT	N/A	BIT	N/A	BIT	N/A	BIT	N/A
STEP ACTION		**STEP ACTION**		**STEP ACTION**		**STEP ACTION**		**STEP ACTION**		**STEP ACTION**		**STEP ACTION**		**STEP ACTION**	
Function	Rotate	Function	Reverse	Function	Delay	Function	Forward	Function	Rotate	Function	Reverse	Function	Rotate	Function	Reverse
Speed	33	Speed	33	Speed	33	Speed	33	Speed	33	Speed	33	Speed	33	Speed	33
Navigation	DR	Navigation	DR	Navigation	DR	Navigation	DR	Navigation	DR	Navigation	DR	Navigation	DR	Navigation	DR
Direction	Center	Direction	Center	Direction	Center	Direction	Center	Direction	Center	Direction	Center	Direction	Center	Direction	Center
Size	90	Size	104	Size	5	Size	104	Size	90	Size	66	Size	-90	Size	186
Loss Of Guidance	N/A	Loss Of Guidance	N/A	Loss Of Guidance	N/A	Loss Of Guidance	N/A	Loss Of Guidance	N/A	Loss Of Guidance	N/A	Loss Of Guidance	N/A	Loss Of Guidance	N/A
Obstacle Avoidance	1	Obstacle Avoidance	1	Obstacle Avoidance	1	Obstacle Avoidance	1	Obstacle Avoidance	1	Obstacle Avoidance	1	Obstacle Avoidance	1	Obstacle Avoidance	1
Output	#6- Pin Up	Output	#6- Pin Up	Output	7- Pin Dow	Output	N/a	Output	N/a	Output	N/a	Output	N/a	Output	#6- pin up
END OF STEP		**END OF STEP**		**END OF STEP**		**END OF STEP**		**END OF STEP**		**END OF STEP**		**END OF STEP**		**END OF STEP**	
END MODE	Distance	END MODE	Distance	END MODE	Distance	END MODE	Distance	END MODE	Distance	END MODE	Distance	END MODE	Distance	END MODE	Distance
END ACTION	Merge	END ACTION	Merge	END ACTION	Merge	END ACTION	Merge	END ACTION	Merge	END ACTION	Merge	END ACTION	Merge	END ACTION	Merge
NEXT ROUTE	1	NEXT ROUTE	1	NEXT ROUTE	1	NEXT ROUTE	1	NEXT ROUTE	1	NEXT ROUTE	1	NEXT ROUTE	1	NEXT ROUTE	1
NEXT STEP	26	NEXT STEP	27	NEXT STEP	28	NEXT STEP	29	NEXT STEP	30	NEXT STEP	31	NEXT STEP	32	NEXT STEP	33

Route 1		Route 1		Route 1		Route 1		Route 1		Route 1		Route 1		Route 1	
Route	1	Route	1	Route	1	Route	1	Route	1	Route	1	Route	1	Route	1
Step	33	Step	34	Step	35	Step	36	Step	37	Step	38	Step	39	Step	40
STEP INITIATION		STEP INITIATION		STEP INITIATION		STEP INITIATION		STEP INITIATION		STEP INITIATION		STEP INITIATION		STEP INITIATION	
Go Mode	Auto	Go Mode	Auto	Go Mode	Auto	Go Mode	Auto	Go Mode	Auto	Go Mode	Auto	Go Mode	Auto	Go Mode	Auto
Radio Input	N/A	Radio Input	N/A	Radio Input	N/A	Radio Input	N/A	Radio Input	N/A	Radio Input	N/A	Radio Input	N/A	Radio Input	N/A
Hard Wire Input	Cart prese	Hard Wire Input	N/a	Hard Wire Input	N/a	Hard Wire Input	N/a	Hard Wire Input	N/a	Hard Wire Input	N/a	Hard Wire Input	N/a	Hard Wire Input	N/a
BIT	N/A	BIT	N/A	BIT	N/A	BIT	N/A	BIT	N/A	BIT	N/A	BIT	N/A	BIT	N/A
STEP ACTION		STEP ACTION		STEP ACTION		STEP ACTION		STEP ACTION		STEP ACTION		STEP ACTION		STEP ACTION	
Function	Forward	Function	Rotate	Function	Forward	Function	Rotate	Function	Reverse	Function	Delay	Function	Forward	Function	Rotate
Speed	33	Speed	33	Speed	33	Speed	33	Speed	33	Speed	33	Speed	33	Speed	33
Navigation	DR	Navigation	DR	Navigation	DR	Navigation	DR	Navigation	DR	Navigation	DR	Navigation	DR	Navigation	DR
Direction	Center	Direction	Center	Direction	Center	Direction	Center	Direction	Center	Direction	Center	Direction	Center	Direction	Center
Size	186	Size	90	Size	66	Size	-135	Size	87	Size	5	Size	87	Size	45
Loss Of Guidance	N/A	Loss Of Guidance	N/A	Loss Of Guidance	N/A	Loss Of Guidance	N/A	Loss Of Guidance	N/A	Loss Of Guidance	N/A	Loss Of Guidance	N/A	Loss Of Guidance	N/A
Obstacle Avoidance	1	Obstacle Avoidance	1	Obstacle Avoidance	1	Obstacle Avoidance	1	Obstacle Avoidance	1	Obstacle Avoidance	1	Obstacle Avoidance	1	Obstacle Avoidance	1
Output	#6- pin up	Output	#6- pin up	Output	#6- pin up	Output	#6- pin up	Output	#6- pin up	Output	7-Pin Dow	Output	N/A	Output	N/A
END OF STEP		END OF STEP		END OF STEP		END OF STEP		END OF STEP		END OF STEP		END OF STEP		END OF STEP	
END MODE	Distance	END MODE	Distance	END MODE	Distance	END MODE	Distance	END MODE	Distance	END MODE	Time	END MODE	Distance	END MODE	Distance
END ACTION	Merge	END ACTION	Merge	END ACTION	Merge	END ACTION	Merge	END ACTION	Merge	END ACTION	Merge	END ACTION	Merge	END ACTION	Merge
NEXT ROUTE	1	NEXT ROUTE	1	NEXT ROUTE	1	NEXT ROUTE	1	NEXT ROUTE	1	NEXT ROUTE	1	NEXT ROUTE	1	NEXT ROUTE	1
NEXT STEP	34	NEXT STEP	35	NEXT STEP	36	NEXT STEP	37	NEXT STEP	38	NEXT STEP	39	NEXT STEP	40	NEXT STEP	41

Route 1		Route 1		Route 1		Route 1		Route 1		Route 1		Route 1		Route 1	
Route	1	Route	1	Route	1	Route	1	Route	1	Route	1	Route	1	Route	1
Step	41	Step	42	Step	43	Step	44	Step	45	Step	46	Step	47	Step	48
STEP INITIATION		STEP INITIATION		STEP INITIATION		STEP INITIATION		STEP INITIATION		STEP INITIATION		STEP INITIATION		STEP INITIATION	
Go Mode	Auto	Go Mode	Auto	Go Mode	Auto	Go Mode	Auto	Go Mode	Auto	Go Mode	Auto	Go Mode	Auto	Go Mode	Auto
Radio Input	N/A	Radio Input	N/A	Radio Input	N/A	Radio Input	N/A	Radio Input	N/A	Radio Input	N/A	Radio Input	N/A	Radio Input	N/A
Hard Wire Input	N/a	Hard Wire Input	Cart Prese	Hard Wire Input	N/A	Hard Wire Input	N/A	Hard Wire Input	N/A	Hard Wire Input	N/A	Hard Wire Input	N/A	Hard Wire Input	N/A
BIT	N/A	BIT	N/A	BIT	N/A	BIT	N/A	BIT	N/A	BIT	N/A	BIT	N/A	BIT	N/A
STEP ACTION		STEP ACTION		STEP ACTION		STEP ACTION		STEP ACTION		STEP ACTION		STEP ACTION		STEP ACTION	
Function	Reverse	Function	Forward	Function	Rotate	Function	Reverse	Function	Rotate	Function	Reverse	Function	Delay	Function	Forward
Speed	33	Speed	33	Speed	33	Speed	33	Speed	33	Speed	33	Speed	33	Speed	33
Navigation	DR	Navigation	DR	Navigation	DR	Navigation	DR	Navigation	DR	Navigation	DR	Navigation	DR	Navigation	DR
Direction	Center	Direction	Center	Direction	Center	Direction	Center	Direction	Center	Direction	Center	Direction	Center	Direction	Center
Size	104	Size	104	Size	90	Size	66	Size	-90	Size	186	Size	5	Size	186
Loss Of Guidance	N/A	Loss Of Guidance	N/A	Loss Of Guidance	N/A	Loss Of Guidance	N/A	Loss Of Guidance	N/A	Loss Of Guidance	N/A	Loss Of Guidance	N/A	Loss Of Guidance	N/A
Obstacle Avoidance	1	Obstacle Avoidance	1	Obstacle Avoidance	1	Obstacle Avoidance	1	Obstacle Avoidance	1	Obstacle Avoidance	1	Obstacle Avoidance	1	Obstacle Avoidance	1
Output	#6-Pin Up	Output	#6-Pin Up	Output	#6-Pin Up	Output	#6-Pin Up	Output	#6-Pin Up	Output	#6-Pin Up	Output	7-Pin Dow	Output	N/A
END OF STEP		END OF STEP		END OF STEP		END OF STEP		END OF STEP		END OF STEP		END OF STEP		END OF STEP	
END MODE	Distance	END MODE	Distance	END MODE	Distance	END MODE	Distance	END MODE	Distance	END MODE	Distance	END MODE	Time	END MODE	Distance
END ACTION	Merge	END ACTION	Merge	END ACTION	Merge	END ACTION	Merge	END ACTION	Merge	END ACTION	Merge	END ACTION	Merge	END ACTION	Merge
NEXT ROUTE	1	NEXT ROUTE	1	NEXT ROUTE	1	NEXT ROUTE	1	NEXT ROUTE	1	NEXT ROUTE	1	NEXT ROUTE	1	NEXT ROUTE	1
NEXT STEP	42	NEXT STEP	43	NEXT STEP	44	NEXT STEP	45	NEXT STEP	46	NEXT STEP	47	NEXT STEP	48	NEXT STEP	49

Route 1		Route 1		Route 1		Route 1		Route 1		Route 1		Route 1		Route 1	
Route	1	Route	1	Route	1	Route	1	Route	1	Route	1	Route	1	Route	1
Step	49	Step	50	Step	51	Step	52	Step	53	Step	54	Step	55	Step	56
STEP INITIATION		STEP INITIATION		STEP INITIATION		STEP INITIATION		STEP INITIATION		STEP INITIATION		STEP INITIATION		STEP INITIATION	
Go Mode	Auto	Go Mode	Auto	Go Mode	Auto	Go Mode	Auto	Go Mode	Auto	Go Mode	Auto	Go Mode	Auto	Go Mode	Auto
Radio Input	N/A	Radio Input	N/A	Radio Input	N/A	Radio Input	N/A	Radio Input	N/A	Radio Input	N/A	Radio Input	N/A	Radio Input	N/A
Hard Wire Input	N/A	Hard Wire Input	N/A	Hard Wire Input	N/A	Hard Wire Input	N/A	Hard Wire Input	Cart Prese	Hard Wire Input	N/a	Hard Wire Input	N/a	Hard Wire Input	N/a
BIT	N/A	BIT	N/A	BIT	N/A	BIT	N/A	BIT	N/A	BIT	N/A	BIT	N/A	BIT	N/A
STEP ACTION		STEP ACTION		STEP ACTION		STEP ACTION		STEP ACTION		STEP ACTION		STEP ACTION		STEP ACTION	
Function	Rotate	Function	Forward	Function	Rotate	Function	Reverse	Function	Forward	Function	Rotate	Function	Forward	Function	Rotate
Speed	33	Speed	33	Speed	33	Speed	33	Speed	33	Speed	33	Speed	33	Speed	33
Navigation	DR	Navigation	DR	Navigation	DR	Navigation	DR	Navigation	DR	Navigation	DR	Navigation	DR	Navigation	DR
Direction	Center	Direction	Center	Direction	Center	Direction	Center	Direction	Center	Direction	Center	Direction	Center	Direction	Center
Size	90	Size	66	Size	-135	Size	87	Size	87	Size	135	Size	1665	Size	-90
Loss Of Guidance	N/A	Loss Of Guidance	N/A	Loss Of Guidance	N/A	Loss Of Guidance	N/A	Loss Of Guidance	N/A	Loss Of Guidance	N/A	Loss Of Guidance	N/A	Loss Of Guidance	N/A
Obstacle Avoidance	1	Obstacle Avoidance	1	Obstacle Avoidance	1	Obstacle Avoidance	1	Obstacle Avoidance	1	Obstacle Avoidance	1	Obstacle Avoidance	1	Obstacle Avoidance	1
Output	N/A	Output	N/A	Output	N/A	Output	#6-Pin Up	Output	#6-Pin Up	Output	#6-Pin Up	Output	#6-Pin Up	Output	#6-Pin Up
END OF STEP		END OF STEP		END OF STEP		END OF STEP		END OF STEP		END OF STEP		END OF STEP		END OF STEP	
END MODE	Distance	END MODE	Distance	END MODE	Distance	END MODE	Distance	END MODE	Distance	END MODE	Distance	END MODE	Distance	END MODE	Distance
END ACTION	Merge	END ACTION	Merge	END ACTION	Merge	END ACTION	Merge	END ACTION	Merge	END ACTION	Merge	END ACTION	Merge	END ACTION	Merge
NEXT ROUTE	1	NEXT ROUTE	1	NEXT ROUTE	1	NEXT ROUTE	1	NEXT ROUTE	1	NEXT ROUTE	1	NEXT ROUTE	1	NEXT ROUTE	1
NEXT STEP	50	NEXT STEP	51	NEXT STEP	52	NEXT STEP	53	NEXT STEP	54	NEXT STEP	55	NEXT STEP	56	NEXT STEP	57

Route 1		Route 1		Route 1		Route 1		Route 1		Route 1		Route 1		Route 1	
Route	1	Route	1	Route	1	Route	1	Route	1	Route	1	Route	1	Route	1
Step	57	Step	58	Step	59	Step	60	Step	61	Step	62	Step	63	Step	64
STEP INITIATION		STEP INITIATION		STEP INITIATION		STEP INITIATION		STEP INITIATION		STEP INITIATION		STEP INITIATION		STEP INITIATION	
Go Mode	Auto	Go Mode	Auto	Go Mode	Auto	Go Mode	Auto	Go Mode	Auto	Go Mode	Auto	Go Mode	Auto	Go Mode	Auto
Radio Input	N/A	Radio Input	N/A	Radio Input	N/A	Radio Input	N/A	Radio Input	N/A	Radio Input	N/A	Radio Input	N/A	Radio Input	N/A
Hard Wire Input	N/a	Hard Wire Input	N/a	Hard Wire Input	N/a	Hard Wire Input	N/a	Hard Wire Input	N/a	Hard Wire Input	N/a	Hard Wire Input	N/a	Hard Wire Input	N/a
BIT	N/A	BIT	N/A	BIT	N/A	BIT	N/A	BIT	N/A	BIT	N/A	BIT	N/A	BIT	N/A
STEP ACTION		STEP ACTION		STEP ACTION		STEP ACTION		STEP ACTION		STEP ACTION		STEP ACTION		STEP ACTION	
Function	Forward	Function	Rotate	Function	Forward	Function	Rotate	Function	Forward	Function	Rotate	Function	Forward	Function	Rotate
Speed	33	Speed	33	Speed	33	Speed	33	Speed	33	Speed	33	Speed	33	Speed	33
Navigation	DR	Navigation	DR	Navigation	DR	Navigation	DR	Navigation	DR	Navigation	DR	Navigation	DR	Navigation	DR
Direction	Center	Direction	Center	Direction	Center	Direction	Center	Direction	Center	Direction	Center	Direction	Center	Direction	Center
Size	1164	Size	-90	Size	2284	Size	90	Size	962	Size	-90	Size	525	Size	90
Loss Of Guidance	N/A	Loss Of Guidance	N/A	Loss Of Guidance	N/A	Loss Of Guidance	N/A	Loss Of Guidance	N/A	Loss Of Guidance	N/A	Loss Of Guidance	N/A	Loss Of Guidance	N/A
Obstacle Avoidance	1	Obstacle Avoidance	1	Obstacle Avoidance	1	Obstacle Avoidance	1	Obstacle Avoidance	1	Obstacle Avoidance	1	Obstacle Avoidance	1	Obstacle Avoidance	1
Output	#6-Pin Up	Output	#6-Pin Up	Output	#6-Pin Up	Output	#6-Pin Up	Output	#6-Pin Up	Output	#6-Pin Up	Output	#6-Pin Up	Output	#6-Pin Up
END OF STEP		END OF STEP		END OF STEP		END OF STEP		END OF STEP		END OF STEP		END OF STEP		END OF STEP	
END MODE	Distance	END MODE	Distance	END MODE	Distance	END MODE	Distance	END MODE	Distance	END MODE	Distance	END MODE	Distance	END MODE	Distance
END ACTION	Merge	END ACTION	Merge	END ACTION	Merge	END ACTION	Merge	END ACTION	Merge	END ACTION	Merge	END ACTION	Merge	END ACTION	Merge
NEXT ROUTE	1	NEXT ROUTE	1	NEXT ROUTE	1	NEXT ROUTE	1	NEXT ROUTE	1	NEXT ROUTE	1	NEXT ROUTE	1	NEXT ROUTE	1
NEXT STEP	58	NEXT STEP	59	NEXT STEP	60	NEXT STEP	61	NEXT STEP	62	NEXT STEP	63	NEXT STEP	64	NEXT STEP	65

Route 1		Route 1		Route 1		Route 1		Route 1		Route 1		Route 1		Route 1	
Route	1	Route	1	Route	1	Route	1	Route	1	Route	1	Route	1	Route	1
Step	65	Step	66	Step	67	Step	68	Step	69	Step	70	Step	71	Step	72
STEP INITIATION		**STEP INITIATION**		**STEP INITIATION**		**STEP INITIATION**		**STEP INITIATION**		**STEP INITIATION**		**STEP INITIATION**		**STEP INITIATION**	
Go Mode	Auto	Go Mode	Auto	Go Mode	Auto	Go Mode	Auto	Go Mode	Auto	Go Mode	Auto	Go Mode	Auto	Go Mode	Auto
Radio Input	N/A	Radio Input	N/A	Radio Input	N/A	Radio Input	N/A	Radio Input	N/A	Radio Input	N/A	Radio Input	N/A	Radio Input	N/A
Hard Wire Input	N/a	Hard Wire Input	N/a	Hard Wire Input	N/a	Hard Wire Input	N/a	Hard Wire Input	N/a	Hard Wire Input	N/a	Hard Wire Input	N/a	Hard Wire Input	N/a
BIT	N/A	BIT	N/A	BIT	N/A	BIT	N/A	BIT	N/A	BIT	N/A	BIT	N/A	BIT	N/A
STEP ACTION		**STEP ACTION**		**STEP ACTION**		**STEP ACTION**		**STEP ACTION**		**STEP ACTION**		**STEP ACTION**		**STEP ACTION**	
Function	Forward	Function	Rotate	Function	Reverse	Function	Rotate	Function	Reverse	Function	Delay	Function	Forward	Function	Rotate
Speed	33	Speed	33	Speed	33	Speed	33	Speed	33	Speed	33	Speed	33	Speed	33
Navigation	DR	Navigation	DR	Navigation	DR	Navigation	DR	Navigation	DR	Navigation	DR	Navigation	DR	Navigation	DR
Direction	Center	Direction	Center	Direction	Center	Direction	Center	Direction	Center	Direction	Center	Direction	Center	Direction	Center
Size	248	Size	-90	Size	120	Size	-90	Size	84	Size	5	Size	84	Size	90
Loss Of Guidance	N/A	Loss Of Guidance	N/A	Loss Of Guidance	N/A	Loss Of Guidance	N/A	Loss Of Guidance	N/A	Loss Of Guidance	N/A	Loss Of Guidance	N/A	Loss Of Guidance	N/A
Obstacle Avoidance	1	Obstacle Avoidance	1	Obstacle Avoidance	1	Obstacle Avoidance	1	Obstacle Avoidance	1	Obstacle Avoidance	1	Obstacle Avoidance	1	Obstacle Avoidance	1
Output	#6-Pin Up	Output	#6-Pin Up	Output	#6-Pin Up	Output	#6-Pin Up	Output	#6-Pin Up	Output	7-Pin dowi	Output		Output	
END OF STEP		**END OF STEP**		**END OF STEP**		**END OF STEP**		**END OF STEP**		**END OF STEP**		**END OF STEP**		**END OF STEP**	
END MODE	Distance	END MODE	Distance	END MODE	Distance	END MODE	Distance	END MODE	Distance	END MODE	Distance	END MODE	Distance	END MODE	Distance
END ACTION	Merge	END ACTION	Merge	END ACTION	Merge	END ACTION	Merge	END ACTION	Merge	END ACTION	Merge	END ACTION	Merge	END ACTION	Merge
NEXT ROUTE	1	NEXT ROUTE	1	NEXT ROUTE	1	NEXT ROUTE	1	NEXT ROUTE	1	NEXT ROUTE	1	NEXT ROUTE	1	NEXT ROUTE	1
NEXT STEP	66	NEXT STEP	67	NEXT STEP	68	NEXT STEP	69	NEXT STEP	70	NEXT STEP	71	NEXT STEP	72	NEXT STEP	73

Route 1		Route 1		Route 1		Route 1		Route 1		Route 1		Route 1	
Route	1	Route	1	Route	1	Route	1	Route	1	Route	1	Route	1
Step	73	Step	74	Step	75	Step	76	Step	77	Step	78	Step	78
STEP INITIATION		**STEP INITIATION**		**STEP INITIATION**		**STEP INITIATION**		**STEP INITIATION**		**STEP INITIATION**		**STEP INITIATION**	
Go Mode	Auto	Go Mode	Auto	Go Mode	Auto	Go Mode	Auto	Go Mode	Auto	Go Mode	Trigger	Go Mode	Trigger
Radio Input	N/A	Radio Input	N/A	Radio Input	N/A	Radio Input	N/A	Radio Input	N/A	Radio Input	#1 "Ford"	Radio Input	#1 "Ford"
										HOME RFID	#2"Bin full	Home RFID	#2"Bin full
Hard Wire Input	N/a	Hard Wire Input	N/a	Hard Wire Input	N/a	Hard Wire Input	N/a	Hard Wire Input	N/a	Hard Wire Input	N/a	Hard Wire Input	N/a
BIT	N/A	BIT	N/A	BIT	N/A	BIT	N/A	BIT	N/A	BIT	Bit #1 On or Bit #3 On	BIT	Bit #1 On Bit#2 and 3 Off
STEP ACTION		**STEP ACTION**		**STEP ACTION**		**STEP ACTION**		**STEP ACTION**		**STEP ACTION**		**STEP ACTION**	
Function	Forward	Function	Rotate	Function	Reverse	Function	Rotate	Function	Reverse	Function	Dispatch	Function	Dispatch
Speed	33	Speed	33	Speed	33	Speed	33	Speed	33	Speed	N/a	Speed	N/a
Navigation	DR	Navigation	DR	Navigation	DR	Navigation	DR	Navigation	DR	Navigation	N/a	Navigation	N/a
Direction	Center	Direction	Center	Direction	Center	Direction	Center	Direction	Center	Direction	N/a	Direction	N/a
Size	120	Size	-90	Size	168	Size	90	Size	66	Size	N/a	Size	N/a
Loss Of Guidance	N/A	Loss Of Guidance	N/A	Loss Of Guidance	N/A	Loss Of Guidance	N/A	Loss Of Guidance	N/A	Loss Of Guidance	N/A	Loss Of Guidance	N/A
Obstacle Avoidance	1	Obstacle Avoidance	1	Obstacle Avoidance	1	Obstacle Avoidance	1	Obstacle Avoidance	1	Obstacle Avoidance	N/a	Obstacle Avoidance	N/a
Output		Output		Output		Output		Output		Output	N/a	Output	N/a
END OF STEP		**END OF STEP**		**END OF STEP**		**END OF STEP**		**END OF STEP**		**END OF STEP**		**END OF STEP**	
END MODE	Distance	END MODE	Distance	END MODE	Distance	END MODE	Distance	END MODE	Distance	END MODE	N/a	END MODE	N/a
END ACTION	Merge	END ACTION	Merge	END ACTION	Merge	END ACTION	Merge	END ACTION	Merge	END ACTION	Merge Bit #2 inputs off	END ACTION	Merge Bit #2 inputs off
NEXT ROUTE	1	NEXT ROUTE	1	NEXT ROUTE	1	NEXT ROUTE	1	NEXT ROUTE	1	NEXT ROUTE	2	NEXT ROUTE	1
NEXT STEP	74	NEXT STEP	75	NEXT STEP	76	NEXT STEP	77	NEXT STEP	78	NEXT STEP	1	NEXT STEP	1

Tier 1 Route 2

Route 2		Route 2		Route 2		Route 2		Route 2		Route 2		Route 2		Route 2	
Route	2	Route	2	Route	2	Route	2	Route	2	Route	2	Route	2	Route	2
Step	1	Step	2	Step	3	Step	4	Step	5	Step	6	Step	7	Step	8
STEP INITIATION		**STEP INITIATION**		**STEP INITIATION**		**STEP INITIATION**		**STEP INITIATION**		**STEP INITIATION**		**STEP INITIATION**		**STEP INITIATION**	
Go Mode	Input Triggers	Go Mode	Auto	Go Mode	Auto	Go Mode	Auto	Go Mode	Auto	Go Mode	Auto	Go Mode	Auto	Go Mode	Auto
Radio Input	Radio #1 "Ford"	Radio Input	N/A	Radio Input	N/A	Radio Input	N/A	Radio Input	N/A	Radio Input	N/A	Radio Input	N/A	Radio Input	N/A
Home RFID	Radio #2 "Bin Full"														
Hard Wire Input	N/A	Hard Wire Input	N/A	Hard Wire Input	N/A	Hard Wire Input	N/A	Hard Wire Input	N/A	Hard Wire Input	N/A	Hard Wire Input	N/A	Hard Wire Input	N/A
BIT	Bit #1 On Bit #3 On	BIT	N/A	BIT	N/A	BIT	N/A	BIT	N/A	BIT	N/A	BIT	N/A	BIT	N/A
STEP ACTION		**STEP ACTION**		**STEP ACTION**		**STEP ACTION**		**STEP ACTION**		**STEP ACTION**		**STEP ACTION**		**STEP ACTION**	
Function	Dispatch	Function	Forward	Function	Rotate	Function	Forward	Function	Rotate	Function	Reverse	Function	Rotate	Function	Reverse
Speed	N/A	Speed	33	Speed	33	Speed	33	Speed	33	Speed	33	Speed	33	Speed	33
Navigation	N/A	Navigation	DR	Navigation	DR	Navigation	DR	Navigation	DR	Navigation	DR	Navigation	DR	Navigation	DR
Direction	N/A	Direction	Center	Direction	N/A	Direction	Center	Direction	N/A	Direction	Center	Direction	N/A	Direction	Center
Size	N/A	Size	66	Size	-90	Size	168	Size	90	Size	57	Size	-90	Size	84
Loss Of Guidance	N/A	Loss Of Guidance	N/A	Loss Of Guidance	N/A	Loss Of Guidance	N/A	Loss Of Guidance	N/A	Loss Of Guidance	N/A	Loss Of Guidance	N/A	Loss Of Guidance	N/A
Obstacle Avoidance	N/A	Obstacle Avoidance	1	Obstacle Avoidance	1	Obstacle Avoidance	1	Obstacle Avoidance	1	Obstacle Avoidance	1	Obstacle Avoidance	1	Obstacle Avoidance	1
Output	N/A	Output	N/A	Output	N/A	Output	N/A	Output	N/A	Output	N/A	Output	N/A	Output	#6- Pin Up
END OF STEP		**END OF STEP**		**END OF STEP**		**END OF STEP**		**END OF STEP**		**END OF STEP**		**END OF STEP**		**END OF STEP**	
END MODE	N/A	END MODE	Distance	END MODE	Distance	END MODE	Distance	END MODE	Distance	END MODE	Distance	END MODE	Distance	END MODE	Distance
END ACTION	Merge Bit #1 off	END ACTION	Merge	END ACTION	Merge	END ACTION	Merge	END ACTION	Merge	END ACTION	Merge	END ACTION	Merge	END ACTION	Merge
NEXT ROUTE	2	NEXT ROUTE	2	NEXT ROUTE	2	NEXT ROUTE	2	NEXT ROUTE	2	NEXT ROUTE	2	NEXT ROUTE	2	NEXT ROUTE	2
NEXT STEP	2	NEXT STEP	3	NEXT STEP	4	NEXT STEP	5	NEXT STEP	6	NEXT STEP	7	NEXT STEP	8	NEXT STEP	9

Route 2		Route 2		Route 2		Route 2		Route 2		Route 2		Route 2		Route 2	
Route	2	Route	2	Route	2	Route	2	Route	2	Route	2	Route	2	Route	2
Step	9	Step	10	Step	11	Step	12	Step	13	Step	14	Step	15	Step	16
STEP INITIATION		**STEP INITIATION**		**STEP INITIATION**		**STEP INITIATION**		**STEP INITIATION**		**STEP INITIATION**		**STEP INITIATION**		**STEP INITIATION**	
Go Mode	Input Triggers	Go Mode	Auto	Go Mode	Auto	Go Mode	Auto	Go Mode	Auto	Go Mode	Auto	Go Mode	Auto	Go Mode	Auto
Radio Input	N/A	Radio Input	N/A	Radio Input	N/A	Radio Input	N/A	Radio Input	N/A	Radio Input	N/A	Radio Input	N/A	Radio Input	N/A
Hard Wire Input	1- Cart Presence	Hard Wire Input	N/A	Hard Wire Input	N/A	Hard Wire Input	N/A	Hard Wire Input	N/A	Hard Wire Input	N/A	Hard Wire Input	N/A	Hard Wire Input	N/A
BIT	N/A	BIT	N/A	BIT	N/A	BIT	N/A	BIT	N/A	BIT	N/A	BIT	N/A	BIT	N/A
STEP ACTION		**STEP ACTION**		**STEP ACTION**		**STEP ACTION**		**STEP ACTION**		**STEP ACTION**		**STEP ACTION**		**STEP ACTION**	
Function	Delay	Function	Forward	Function	Rotate	Function	Forward	Function	Rotate	Function	Forward	Function	Rotate	Function	Forward
Speed	N/A	Speed	33	Speed	33	Speed	33	Speed	33	Speed	33	Speed	33	Speed	33
Navigation	DR	Navigation	DR	Navigation	DR	Navigation	DR	Navigation	DR	Navigation	DR	Navigation	DR	Navigation	DR
Direction	N/A	Direction	Center	Direction	N/A	Direction	Center	Direction	Center	Direction	Center	Direction	Center	Direction	Center
Size	3	Size	84	Size	90	Size	57	Size	-90	Size	248	Size	-90	Size	525
Loss Of Guidance	N/A	Loss Of Guidance	N/A	Loss Of Guidance	N/A	Loss Of Guidance	N/A	Loss Of Guidance	N/A	Loss Of Guidance	N/A	Loss Of Guidance	N/A	Loss Of Guidance	N/A
Obstacle Avoidance	1	Obstacle Avoidance	1	Obstacle Avoidance	1	Obstacle Avoidance	1	Obstacle Avoidance	1	Obstacle Avoidance	1	Obstacle Avoidance	1	Obstacle Avoidance	1
Output	#6- Pin Up	Output	#6- Pin Up	Output	#6- Pin Up	Output	#6- Pin Up	Output	#6- Pin Up	Output	#6- Pin Up	Output	#6- Pin Up	Output	#6- Pin Up
END OF STEP		**END OF STEP**		**END OF STEP**		**END OF STEP**		**END OF STEP**		**END OF STEP**		**END OF STEP**		**END OF STEP**	
END MODE	Time	END MODE	Distance	END MODE	Distance	END MODE	Distance	END MODE	Distance	END MODE	Distance	END MODE	Distance	END MODE	Distance
END ACTION	Merge	END ACTION	Merge	END ACTION	Merge	END ACTION	Merge	END ACTION	Merge	END ACTION	Merge	END ACTION	Merge	END ACTION	Merge
NEXT ROUTE	2	NEXT ROUTE	2	NEXT ROUTE	2	NEXT ROUTE	2	NEXT ROUTE	2	NEXT ROUTE	2	NEXT ROUTE	2	NEXT ROUTE	2
NEXT STEP	10	NEXT STEP	11	NEXT STEP	12	NEXT STEP	13	NEXT STEP	14	NEXT STEP	15	NEXT STEP	16	NEXT STEP	17

Route 2		Route 2		Route 2		Route 2		Route 2		Route 2		Route 2		Route 2	
Route	2	Route	2	Route	2	Route	2	Route	2	Route	2	Route	2	Route	2
Step	17	Step	18	Step	19	Step	20	Step	21	Step	22	Step	23	Step	24
STEP INITIATION		**STEP INITIATION**		**STEP INITIATION**		**STEP INITIATION**		**STEP INITIATION**		**STEP INITIATION**		**STEP INITIATION**		**STEP INITIATION**	
Go Mode	Auto	Go Mode	Auto	Go Mode	Auto	Go Mode	Auto	Go Mode	Auto	Go Mode	Auto	Go Mode	Auto	Go Mode	Auto
Radio Input	N/A	Radio Input	N/A	Radio Input	N/A	Radio Input	N/A	Radio Input	N/A	Radio Input	N/A	Radio Input	N/A	Radio Input	N/A
Hard Wire Input	N/A	Hard Wire Input	N/A	Hard Wire Input	N/A	Hard Wire Input	N/A	Hard Wire Input	N/A	Hard Wire Input	N/A	Hard Wire Input	N/A	Hard Wire Input	N/A
BIT	N/A	BIT	N/A	BIT	N/A	BIT	N/A	BIT	N/A	BIT	N/A	BIT	N/A	BIT	N/A
STEP ACTION		**STEP ACTION**		**STEP ACTION**		**STEP ACTION**		**STEP ACTION**		**STEP ACTION**		**STEP ACTION**		**STEP ACTION**	
Function	Rotate	Function	Forward	Function	Rotate	Function	Froward	Function	Rotate	Function	Forward	Function	Rotate	Function	Forward
Speed	33	Speed	33	Speed	33	Speed	33	Speed	33	Speed	33	Speed	33	Speed	33
Navigation	DR	Navigation	DR	Navigation	DR	Navigation	DR	Navigation	DR	Navigation	DR	Navigation	DR	Navigation	DR
Direction	Center	Direction	Center	Direction	Center	Direction	Center	Direction	Center	Direction	Center	Direction	Center	Direction	Center
Size	90	Size	962	Size	-90	Size	2284	Size	90	Size	1164	Size	90	Size	1665
Loss Of Guidance	N/A	Loss Of Guidance	N/A	Loss Of Guidance	N/A	Loss Of Guidance	N/A	Loss Of Guidance	N/A	Loss Of Guidance	N/A	Loss Of Guidance	N/A	Loss Of Guidance	N/A
Obstacle Avoidance	1	Obstacle Avoidance	1	Obstacle Avoidance	1	Obstacle Avoidance	1	Obstacle Avoidance	1	Obstacle Avoidance	1	Obstacle Avoidance	1	Obstacle Avoidance	1
Output	#6- Pin Up	Output	#6- Pin Up	Output	#6- Pin Up	Output	#6- Pin Up	Output	#6- Pin Up	Output	#6- Pin Up	Output	#6- Pin Up	Output	#6- Pin Up
END OF STEP		**END OF STEP**		**END OF STEP**		**END OF STEP**		**END OF STEP**		**END OF STEP**		**END OF STEP**		**END OF STEP**	
END MODE	Distance	END MODE	Distance	END MODE	Distance	END MODE	Distance	END MODE	Distance	END MODE	Distance	END MODE	Distance	END MODE	Distance
END ACTION	Merge	END ACTION	Merge	END ACTION	Merge	END ACTION	Merge	END ACTION	Merge	END ACTION	Merge	END ACTION	Merge	END ACTION	Merge
NEXT ROUTE	2	NEXT ROUTE	2	NEXT ROUTE	2	NEXT ROUTE	2	NEXT ROUTE	2	NEXT ROUTE	2	NEXT ROUTE	2	NEXT ROUTE	2
NEXT STEP	18	NEXT STEP	19	NEXT STEP	20	NEXT STEP	21	NEXT STEP	22	NEXT STEP	23	NEXT STEP	24	NEXT STEP	25

Route 2		Route 2		Route 2		Route 2		Route 2		Route 2		Route 2		Route 2	
Route	2	Route	2	Route	2	Route	2	Route	2	Route	2	Route	2	Route	2
Step	25	Step	26	Step	27	Step	28	Step	29	Step	30	Step	31	Step	32
STEP INITIATION		**STEP INITIATION**		**STEP INITIATION**		**STEP INITIATION**		**STEP INITIATION**		**STEP INITIATION**		**STEP INITIATION**		**STEP INITIATION**	
Go Mode	Auto	Go Mode	Auto	Go Mode	Auto	Go Mode	Auto	Go Mode	Auto	Go Mode	Auto	Go Mode	Auto	Go Mode	Auto
Radio Input	N/A	Radio Input	N/A	Radio Input	N/A	Radio Input	N/A	Radio Input	N/A	Radio Input	N/A	Radio Input	N/A	Radio Input	N/A
Hard Wire Input	N/A	Hard Wire Input	N/A	Hard Wire Input	N/A	Hard Wire Input	N/A	Hard Wire Input	N/A	Hard Wire Input	N/A	Hard Wire Input	N/A	Hard Wire Input	N/A
BIT	N/A	BIT	N/A	BIT	N/A	BIT	N/A	BIT	N/A	BIT	N/A	BIT	N/A	BIT	N/A
STEP ACTION		**STEP ACTION**		**STEP ACTION**		**STEP ACTION**		**STEP ACTION**		**STEP ACTION**		**STEP ACTION**		**STEP ACTION**	
Function	Rotate	Function	Reverse	Function	Delay	Function	Forward	Function	Rotate	Function	Reverse	Function	Rotate	Function	Reverse
Speed	33	Speed	33	Speed	33	Speed	33	Speed	33	Speed	33	Speed	33	Speed	33
Navigation	DR	Navigation	DR	Navigation	DR	Navigation	DR	Navigation	DR	Navigation	DR	Navigation	DR	Navigation	DR
Direction	Center	Direction	Center	Direction	Center	Direction	Center	Direction	Center	Direction	Center	Direction	Center	Direction	Center
Size	90	Size	104	Size	5	Size	104	Size	90	Size	66	Size	-90	Size	186
Loss Of Guidance	N/A	Loss Of Guidance	N/A	Loss Of Guidance	N/A	Loss Of Guidance	N/A	Loss Of Guidance	N/A	Loss Of Guidance	N/A	Loss Of Guidance	N/A	Loss Of Guidance	N/A
Obstacle Avoidance	1	Obstacle Avoidance	1	Obstacle Avoidance	1	Obstacle Avoidance	1	Obstacle Avoidance	1	Obstacle Avoidance	1	Obstacle Avoidance	1	Obstacle Avoidance	1
Output	#6- Pin Up	Output	#6- Pin Up	Output	7- Pin Dow	Output	N/a	Output	N/a	Output	N/a	Output	N/a	Output	#6- pin up
END OF STEP		**END OF STEP**		**END OF STEP**		**END OF STEP**		**END OF STEP**		**END OF STEP**		**END OF STEP**		**END OF STEP**	
END MODE	Distance	END MODE	Distance	END MODE	Distance	END MODE	Distance	END MODE	Distance	END MODE	Distance	END MODE	Distance	END MODE	Distance
END ACTION	Merge	END ACTION	Merge	END ACTION	Merge	END ACTION	Merge	END ACTION	Merge	END ACTION	Merge	END ACTION	Merge	END ACTION	Merge
NEXT ROUTE	2	NEXT ROUTE	2	NEXT ROUTE	2	NEXT ROUTE	2	NEXT ROUTE	2	NEXT ROUTE	2	NEXT ROUTE	2	NEXT ROUTE	2
NEXT STEP	26	NEXT STEP	27	NEXT STEP	28	NEXT STEP	29	NEXT STEP	30	NEXT STEP	31	NEXT STEP	32	NEXT STEP	33

Route 2		Route 2		Route 2		Route 2		Route 2		Route 2		Route 2		Route 2	
Route	2	Route	2	Route	2	Route	2	Route	2	Route	2	Route	2	Route	2
Step	33	Step	34	Step	35	Step	36	Step	37	Step	38	Step	39	Step	40
STEP INITIATION		STEP INITIATION		STEP INITIATION		STEP INITIATION		STEP INITIATION		STEP INITIATION		STEP INITIATION		STEP INITIATION	
Go Mode	Auto	Go Mode	Auto	Go Mode	Auto	Go Mode	Auto	Go Mode	Auto	Go Mode	Auto	Go Mode	Auto	Go Mode	Auto
Radio Input	N/A	Radio Input	N/A	Radio Input	N/A	Radio Input	N/A	Radio Input	N/A	Radio Input	N/A	Radio Input	N/A	Radio Input	N/A
Hard Wire Input	Cart prese	Hard Wire Input	N/a	Hard Wire Input	N/a	Hard Wire Input	N/a	Hard Wire Input	N/a	Hard Wire Input	N/a	Hard Wire Input	N/a	Hard Wire Input	N/a
BIT	N/A	BIT	N/A	BIT	N/A	BIT	N/A	BIT	N/A	BIT	N/A	BIT	N/A	BIT	N/A
STEP ACTION		STEP ACTION		STEP ACTION		STEP ACTION		STEP ACTION		STEP ACTION		STEP ACTION		STEP ACTION	
Function	Forward	Function	Rotate	Function	Forward	Function	Rotate	Function	Reverse	Function	Delay	Function	Forward	Function	Rotate
Speed	33	Speed	33	Speed	33	Speed	33	Speed	33	Speed	33	Speed	33	Speed	33
Navigation	DR	Navigation	DR	Navigation	DR	Navigation	DR	Navigation	DR	Navigation	DR	Navigation	DR	Navigation	DR
Direction	Center	Direction	Center	Direction	Center	Direction	Center	Direction	Center	Direction	Center	Direction	Center	Direction	Center
Size	186	Size	90	Size	66	Size	-135	Size	87	Size	5	Size	87	Size	45
Loss Of Guidance	N/A	Loss Of Guidance	N/A	Loss Of Guidance	N/A	Loss Of Guidance	N/A	Loss Of Guidance	N/A	Loss Of Guidance	N/A	Loss Of Guidance	N/A	Loss Of Guidance	N/A
Obstacle Avoidance	1	Obstacle Avoidance	1	Obstacle Avoidance	1	Obstacle Avoidance	1	Obstacle Avoidance	1	Obstacle Avoidance	1	Obstacle Avoidance	1	Obstacle Avoidance	1
Output	#6- pin up	Output	#6- pin up	Output	#6- pin up	Output	#6- pin up	Output	#6- pin up	Output	7-Pin Dow	Output	N/A	Output	N/A
END OF STEP		END OF STEP		END OF STEP		END OF STEP		END OF STEP		END OF STEP		END OF STEP		END OF STEP	
END MODE	Distance	END MODE	Distance	END MODE	Distance	END MODE	Distance	END MODE	Distance	END MODE	Time	END MODE	Distance	END MODE	Distance
END ACTION	Merge	END ACTION	Merge	END ACTION	Merge	END ACTION	Merge	END ACTION	Merge	END ACTION	Merge	END ACTION	Merge	END ACTION	Merge
NEXT ROUTE	2	NEXT ROUTE	2	NEXT ROUTE	2	NEXT ROUTE	2	NEXT ROUTE	2	NEXT ROUTE	2	NEXT ROUTE	2	NEXT ROUTE	2
NEXT STEP	34	NEXT STEP	35	NEXT STEP	36	NEXT STEP	37	NEXT STEP	38	NEXT STEP	39	NEXT STEP	40	NEXT STEP	41

Route 2		Route 2		Route 2		Route 2		Route 2		Route 2		Route 2		Route 2	
Route	2	Route	2	Route	2	Route	2	Route	2	Route	2	Route	2	Route	2
Step	41	Step	42	Step	43	Step	44	Step	45	Step	46	Step	47	Step	48
STEP INITIATION		STEP INITIATION		STEP INITIATION		STEP INITIATION		STEP INITIATION		STEP INITIATION		STEP INITIATION		STEP INITIATION	
Go Mode	Auto	Go Mode	Auto	Go Mode	Auto	Go Mode	Auto	Go Mode	Auto	Go Mode	Auto	Go Mode	Auto	Go Mode	Auto
Radio Input	N/A	Radio Input	N/A	Radio Input	N/A	Radio Input	N/A	Radio Input	N/A	Radio Input	N/A	Radio Input	N/A	Radio Input	N/A
Hard Wire Input	N/a	Hard Wire Input	Cart Prese	Hard Wire Input	N/A	Hard Wire Input	N/A	Hard Wire Input	N/A	Hard Wire Input	N/A	Hard Wire Input	N/A	Hard Wire Input	N/A
BIT	N/A	BIT	N/A	BIT	N/A	BIT	N/A	BIT	N/A	BIT	N/A	BIT	N/A	BIT	N/A
STEP ACTION		STEP ACTION		STEP ACTION		STEP ACTION		STEP ACTION		STEP ACTION		STEP ACTION		STEP ACTION	
Function	Reverse	Function	Forward	Function	Rotate	Function	Reverse	Function	Rotate	Function	Reverse	Function	Delay	Function	Forward
Speed	33	Speed	33	Speed	33	Speed	33	Speed	33	Speed	33	Speed	33	Speed	33
Navigation	DR	Navigation	DR	Navigation	DR	Navigation	DR	Navigation	DR	Navigation	DR	Navigation	DR	Navigation	DR
Direction	Center	Direction	Center	Direction	Center	Direction	Center	Direction	Center	Direction	Center	Direction	Center	Direction	Center
Size	104	Size	104	Size	90	Size	66	Size	-90	Size	186	Size	5	Size	186
Loss Of Guidance	N/A	Loss Of Guidance	N/A	Loss Of Guidance	N/A	Loss Of Guidance	N/A	Loss Of Guidance	N/A	Loss Of Guidance	N/A	Loss Of Guidance	N/A	Loss Of Guidance	N/A
Obstacle Avoidance	1	Obstacle Avoidance	1	Obstacle Avoidance	1	Obstacle Avoidance	1	Obstacle Avoidance	1	Obstacle Avoidance	1	Obstacle Avoidance	1	Obstacle Avoidance	1
Output	#6-Pin Up	Output	#6-Pin Up	Output	#6-Pin Up	Output	#6-Pin Up	Output	#6-Pin Up	Output	#6-Pin Up	Output	7-Pin Dow	Output	N/A
END OF STEP		END OF STEP		END OF STEP		END OF STEP		END OF STEP		END OF STEP		END OF STEP		END OF STEP	
END MODE	Distance	END MODE	Distance	END MODE	Distance	END MODE	Distance	END MODE	Distance	END MODE	Distance	END MODE	Time	END MODE	Distance
END ACTION	Merge	END ACTION	Merge	END ACTION	Merge	END ACTION	Merge	END ACTION	Merge	END ACTION	Merge	END ACTION	Merge	END ACTION	Merge
NEXT ROUTE	2	NEXT ROUTE	2	NEXT ROUTE	2	NEXT ROUTE	2	NEXT ROUTE	2	NEXT ROUTE	2	NEXT ROUTE	2	NEXT ROUTE	2
NEXT STEP	42	NEXT STEP	43	NEXT STEP	44	NEXT STEP	45	NEXT STEP	46	NEXT STEP	47	NEXT STEP	48	NEXT STEP	49

Route 2		Route 2		Route 2		Route 2		Route 2		Route 2		Route 2		Route 2	
Route	2	Route	2	Route	2	Route	2	Route	2	Route	2	Route	2	Route	2
Step	49	Step	50	Step	51	Step	52	Step	53	Step	54	Step	55	Step	56
STEP INITIATION		STEP INITIATION		STEP INITIATION		STEP INITIATION		STEP INITIATION		STEP INITIATION		STEP INITIATION		STEP INITIATION	
Go Mode	Auto	Go Mode	Auto	Go Mode	Auto	Go Mode	Auto	Go Mode	Auto	Go Mode	Auto	Go Mode	Auto	Go Mode	Auto
Radio Input	N/A	Radio Input	N/A	Radio Input	N/A	Radio Input	N/A	Radio Input	N/A	Radio Input	N/A	Radio Input	N/A	Radio Input	N/A
Hard Wire Input	N/A	Hard Wire Input	N/A	Hard Wire Input	N/A	Hard Wire Input	N/A	Hard Wire Input	Cart Prese	Hard Wire Input	N/a	Hard Wire Input	N/a	Hard Wire Input	N/a
BIT	N/A	BIT	N/A	BIT	N/A	BIT	N/A	BIT	N/A	BIT	N/A	BIT	N/A	BIT	N/A
STEP ACTION		STEP ACTION		STEP ACTION		STEP ACTION		STEP ACTION		STEP ACTION		STEP ACTION		STEP ACTION	
Function	Rotate	Function	Forward	Function	Rotate	Function	Reverse	Function	Forward	Function	Rotate	Function	Forward	Function	Rotate
Speed	33	Speed	33	Speed	33	Speed	33	Speed	33	Speed	33	Speed	33	Speed	33
Navigation	DR	Navigation	DR	Navigation	DR	Navigation	DR	Navigation	DR	Navigation	DR	Navigation	DR	Navigation	DR
Direction	Center	Direction	Center	Direction	Center	Direction	Center	Direction	Center	Direction	Center	Direction	Center	Direction	Center
Size	90	Size	66	Size	-135	Size	87	Size	87	Size	135	Size	1665	Size	-90
Loss Of Guidance	N/A	Loss Of Guidance	N/A	Loss Of Guidance	N/A	Loss Of Guidance	N/A	Loss Of Guidance	N/A	Loss Of Guidance	N/A	Loss Of Guidance	N/A	Loss Of Guidance	N/A
Obstacle Avoidance	1	Obstacle Avoidance	1	Obstacle Avoidance	1	Obstacle Avoidance	1	Obstacle Avoidance	1	Obstacle Avoidance	1	Obstacle Avoidance	1	Obstacle Avoidance	1
Output	N/A	Output	N/A	Output	N/A	Output	#6-Pin Up	Output	#6-Pin Up	Output	#6-Pin Up	Output	#6-Pin Up	Output	#6-Pin Up
END OF STEP		END OF STEP		END OF STEP		END OF STEP		END OF STEP		END OF STEP		END OF STEP		END OF STEP	
END MODE	Distance	END MODE	Distance	END MODE	Distance	END MODE	Distance	END MODE	Distance	END MODE	Distance	END MODE	Distance	END MODE	Distance
END ACTION	Merge	END ACTION	Merge	END ACTION	Merge	END ACTION	Merge	END ACTION	Merge	END ACTION	Merge	END ACTION	Merge	END ACTION	Merge
NEXT ROUTE	2	NEXT ROUTE	2	NEXT ROUTE	2	NEXT ROUTE	2	NEXT ROUTE	2	NEXT ROUTE	2	NEXT ROUTE	2	NEXT ROUTE	2
NEXT STEP	50	NEXT STEP	51	NEXT STEP	52	NEXT STEP	53	NEXT STEP	54	NEXT STEP	55	NEXT STEP	56	NEXT STEP	57

Route 2		Route 2		Route 2		Route 2		Route 2		Route 2		Route 2		Route 2	
Route	2	Route	2	Route	2	Route	2	Route	2	Route	2	Route	2	Route	2
Step	57	Step	58	Step	59	Step	60	Step	61	Step	62	Step	63	Step	64
STEP INITIATION		STEP INITIATION		STEP INITIATION		STEP INITIATION		STEP INITIATION		STEP INITIATION		STEP INITIATION		STEP INITIATION	
Go Mode	Auto	Go Mode	Auto	Go Mode	Auto	Go Mode	Auto	Go Mode	Auto	Go Mode	Auto	Go Mode	Auto	Go Mode	Auto
Radio Input	N/A	Radio Input	N/A	Radio Input	N/A	Radio Input	N/A	Radio Input	N/A	Radio Input	N/A	Radio Input	N/A	Radio Input	N/A
Hard Wire Input	N/a	Hard Wire Input	N/a	Hard Wire Input	N/a	Hard Wire Input	N/a	Hard Wire Input	N/a	Hard Wire Input	N/a	Hard Wire Input	N/a	Hard Wire Input	N/a
BIT	N/A	BIT	N/A	BIT	N/A	BIT	N/A	BIT	N/A	BIT	N/A	BIT	N/A	BIT	N/A
STEP ACTION		STEP ACTION		STEP ACTION		STEP ACTION		STEP ACTION		STEP ACTION		STEP ACTION		STEP ACTION	
Function	Forward	Function	Rotate	Function	Forward	Function	Rotate	Function	Forward	Function	Rotate	Function	Forward	Function	Rotate
Speed	33	Speed	33	Speed	33	Speed	33	Speed	33	Speed	33	Speed	33	Speed	33
Navigation	DR	Navigation	DR	Navigation	DR	Navigation	DR	Navigation	DR	Navigation	DR	Navigation	DR	Navigation	DR
Direction	Center	Direction	Center	Direction	Center	Direction	Center	Direction	Center	Direction	Center	Direction	Center	Direction	Center
Size	1164	Size	-90	Size	2284	Size	90	Size	962	Size	-90	Size	525	Size	90
Loss Of Guidance	N/A	Loss Of Guidance	N/A	Loss Of Guidance	N/A	Loss Of Guidance	N/A	Loss Of Guidance	N/A	Loss Of Guidance	N/A	Loss Of Guidance	N/A	Loss Of Guidance	N/A
Obstacle Avoidance	1	Obstacle Avoidance	1	Obstacle Avoidance	1	Obstacle Avoidance	1	Obstacle Avoidance	1	Obstacle Avoidance	1	Obstacle Avoidance	1	Obstacle Avoidance	1
Output	#6-Pin Up	Output	#6-Pin Up	Output	#6-Pin Up	Output	#6-Pin Up	Output	#6-Pin Up	Output	#6-Pin Up	Output	#6-Pin Up	Output	#6-Pin Up
END OF STEP		END OF STEP		END OF STEP		END OF STEP		END OF STEP		END OF STEP		END OF STEP		END OF STEP	
END MODE	Distance	END MODE	Distance	END MODE	Distance	END MODE	Distance	END MODE	Distance	END MODE	Distance	END MODE	Distance	END MODE	Distance
END ACTION	Merge	END ACTION	Merge	END ACTION	Merge	END ACTION	Merge	END ACTION	Merge	END ACTION	Merge	END ACTION	Merge	END ACTION	Merge
NEXT ROUTE	2	NEXT ROUTE	2	NEXT ROUTE	2	NEXT ROUTE	2	NEXT ROUTE	2	NEXT ROUTE	2	NEXT ROUTE	2	NEXT ROUTE	2
NEXT STEP	58	NEXT STEP	59	NEXT STEP	60	NEXT STEP	61	NEXT STEP	62	NEXT STEP	63	NEXT STEP	64	NEXT STEP	65

Route 2		Route 2		Route 2		Route 2		Route 2		Route 2		Route 2		Route 2	
Route	2	Route	2	Route	2	Route	2	Route	2	Route	2	Route	2	Route	2
Step	65	Step	66	Step	67	Step	68	Step	69	Step	70	Step	71	Step	72
STEP INITIATION		**STEP INITIATION**		**STEP INITIATION**		**STEP INITIATION**		**STEP INITIATION**		**STEP INITIATION**		**STEP INITIATION**		**STEP INITIATION**	
Go Mode	Auto	Go Mode	Auto	Go Mode	Auto	Go Mode	Auto	Go Mode	Auto	Go Mode	Auto	Go Mode	Auto	Go Mode	Auto
Radio Input	N/A	Radio Input	N/A	Radio Input	N/A	Radio Input	N/A	Radio Input	N/A	Radio Input	N/A	Radio Input	N/A	Radio Input	N/A
Hard Wire Input	N/a	Hard Wire Input	N/a	Hard Wire Input	N/a	Hard Wire Input	N/a	Hard Wire Input	N/a	Hard Wire Input	N/a	Hard Wire Input	N/a	Hard Wire Input	N/a
BIT	N/A	BIT	N/A	BIT	N/A	BIT	N/A	BIT	N/A	BIT	N/A	BIT	N/A	BIT	N/A
STEP ACTION		**STEP ACTION**		**STEP ACTION**		**STEP ACTION**		**STEP ACTION**		**STEP ACTION**		**STEP ACTION**		**STEP ACTION**	
Function	Forward	Function	Rotate	Function	Reverse	Function	Rotate	Function	Reverse	Function	Delay	Function	Forward	Function	Rotate
Speed	33	Speed	33	Speed	33	Speed	33	Speed	33	Speed	33	Speed	33	Speed	33
Navigation	DR	Navigation	DR	Navigation	DR	Navigation	DR	Navigation	DR	Navigation	DR	Navigation	DR	Navigation	DR
Direction	Center	Direction	Center	Direction	Center	Direction	Center	Direction	Center	Direction	Center	Direction	Center	Direction	Center
Size	248	Size	-90	Size	57	Size	-90	Size	84	Size	5	Size	84	Size	90
Loss Of Guidance	N/A	Loss Of Guidance	N/A	Loss Of Guidance	N/A	Loss Of Guidance	N/A	Loss Of Guidance	N/A	Loss Of Guidance	N/A	Loss Of Guidance	N/A	Loss Of Guidance	N/A
Obstacle Avoidance	1	Obstacle Avoidance	1	Obstacle Avoidance	1	Obstacle Avoidance	1	Obstacle Avoidance	1	Obstacle Avoidance	1	Obstacle Avoidance	1	Obstacle Avoidance	1
Output	#6-Pin Up	Output	#6-Pin Up	Output	#6-Pin Up	Output	#6-Pin Up	Output	#6-Pin Up	Output	7-Pin dowi	Output		Output	
END OF STEP		**END OF STEP**		**END OF STEP**		**END OF STEP**		**END OF STEP**		**END OF STEP**		**END OF STEP**		**END OF STEP**	
END MODE	Distance	END MODE	Distance	END MODE	Distance	END MODE	Distance	END MODE	Distance	END MODE	Distance	END MODE	Distance	END MODE	Distance
END ACTION	Merge	END ACTION	Merge	END ACTION	Merge	END ACTION	Merge	END ACTION	Merge	END ACTION	Merge	END ACTION	Merge	END ACTION	Merge
NEXT ROUTE	2	NEXT ROUTE	2	NEXT ROUTE	2	NEXT ROUTE	2	NEXT ROUTE	2	NEXT ROUTE	2	NEXT ROUTE	2	NEXT ROUTE	2
NEXT STEP	66	NEXT STEP	67	NEXT STEP	68	NEXT STEP	69	NEXT STEP	70	NEXT STEP	71	NEXT STEP	72	NEXT STEP	73

Route 2		Route 2		Route 2		Route 2		Route 2		Route 2		Route 2	
Route	2	Route	2	Route	2	Route	2	Route	2	Route	2	Route	2
Step	73	Step	74	Step	75	Step	76	Step	77	Step	78	Step	78
STEP INITIATION		**STEP INITIATION**		**STEP INITIATION**		**STEP INITIATION**		**STEP INITIATION**		**STEP INITIATION**		**STEP INITIATION**	
Go Mode	Auto	Go Mode	Auto	Go Mode	Auto	Go Mode	Auto	Go Mode	Auto	Go Mode	Trigger	Go Mode	Trigger
Radio Input	N/A	Radio Input	N/A	Radio Input	N/A	Radio Input	N/A	Radio Input	N/A	Radio Input	#1 "Ford"	Radio Input	#1 "Ford"
										HOME RFID	#2"Bin full	Home RFID	#2"Bin full
Hard Wire Input	N/a	Hard Wire Input	N/a	Hard Wire Input	N/a	Hard Wire Input	N/a	Hard Wire Input	N/a	Hard Wire Input	N/a	Hard Wire Input	N/a
BIT	N/A	BIT	N/A	BIT	N/A	BIT	N/A	BIT	N/A	BIT	Bit #1 On or Bit #3 On	BIT	Bit #1 On Bit#2 and 3 Off
STEP ACTION		**STEP ACTION**		**STEP ACTION**		**STEP ACTION**		**STEP ACTION**		**STEP ACTION**		**STEP ACTION**	
Function	Forward	Function	Rotate	Function	Reverse	Function	Rotate	Function	Reverse	Function	Dispatch	Function	Dispatch
Speed	33	Speed	33	Speed	33	Speed	33	Speed	33	Speed	N/a	Speed	N/a
Navigation	DR	Navigation	DR	Navigation	DR	Navigation	DR	Navigation	DR	Navigation	N/a	Navigation	N/a
Direction	Center	Direction	Center	Direction	Center	Direction	Center	Direction	Center	Direction	N/a	Direction	N/a
Size	57	Size	-90	Size	168	Size	90	Size	66	Size	N/a	Size	N/a
Loss Of Guidance	N/A	Loss Of Guidance	N/A	Loss Of Guidance	N/A	Loss Of Guidance	N/A	Loss Of Guidance	N/A	Loss Of Guidance	N/A	Loss Of Guidance	N/A
Obstacle Avoidance	1	Obstacle Avoidance	1	Obstacle Avoidance	1	Obstacle Avoidance	1	Obstacle Avoidance	1	Obstacle Avoidance	N/a	Obstacle Avoidance	N/a
Output		Output		Output		Output		Output		Output	N/a	Output	N/a
END OF STEP		**END OF STEP**		**END OF STEP**		**END OF STEP**		**END OF STEP**		**END OF STEP**		**END OF STEP**	
END MODE	Distance	END MODE	Distance	END MODE	Distance	END MODE	Distance	END MODE	Distance	END MODE	N/a	END MODE	N/a
END ACTION	Merge	END ACTION	Merge	END ACTION	Merge	END ACTION	Merge	END ACTION	Merge	END ACTION	Merge Bit #2 inputs off	END ACTION	Merge Bit #2 inputs off
NEXT ROUTE	2	NEXT ROUTE	2	NEXT ROUTE	2	NEXT ROUTE	2	NEXT ROUTE	2	NEXT ROUTE	2	NEXT ROUTE	1
NEXT STEP	74	NEXT STEP	75	NEXT STEP	76	NEXT STEP	77	NEXT STEP	78	NEXT STEP	1	NEXT STEP	1

Appendix – B

Tier 2 Route 0

Route 0: 1	
STEP INITIATION	
Go Mode	Input Trigger
Radio Input	Radio Input 1-9
Hard Wire Input	N/a
BIT	BIT #1-#10
STEP ACTION	
Function	Auto
Speed	33
Navigation	DR
Direction	Center
Size	0
Loss Of Guidance	N/A
Obstacle Avoidance	1
Output	N/a
END OF STEP	
END MODE	Distance
END ACTION	Merge
NEXT ROUTE	Directory
NEXT STEP	Directory

Tier 2 Route 1

Route 1		Route 1		Route 1		Route 1		Route 1		Route 1		Route 1		Route 1	
Route	1	Route	1	Route	1	Route	1	Route	1	Route	1	Route	1	Route	1
Step	1	Step	2	Step	3	Step	4	Step	5	Step	6	Step	7	Step	8
STEP INITIATION		**STEP INITIATION**		**STEP INITIATION**		**STEP INITIATION**		**STEP INITIATION**		**STEP INITIATION**		**STEP INITIATION**		**STEP INITIATION**	
Go Mode	Input Triggers	Go Mode	Auto	Go Mode	Auto	Go Mode	Auto	Go Mode	Auto	Go Mode	Auto	Go Mode	Auto	Go Mode	Auto
Radio Input	Radio #1 "Ford"	Radio Input	N/A	Radio Input	N/A	Radio Input	N/A	Radio Input	N/A	Radio Input	N/A	Radio Input	N/A	Radio Input	N/A
Home RFID	Radio #2 "Bin Full"														
Hard Wire Input	N/A	Hard Wire Input	N/A	Hard Wire Input	N/A	Hard Wire Input	N/A	Hard Wire Input	N/A	Hard Wire Input	N/A	Hard Wire Input	N/A	Hard Wire Input	N/A
BIT	Bit #1 On Bit #2 On	BIT	N/A	BIT	N/A	BIT	N/A	BIT	N/A	BIT	N/A	BIT	N/A	BIT	N/A
STEP ACTION		**STEP ACTION**		**STEP ACTION**		**STEP ACTION**		**STEP ACTION**		**STEP ACTION**		**STEP ACTION**		**STEP ACTION**	
Function	Dispatch	Function	Forward	Function	Rotate	Function	Forward	Function	Rotate	Function	Reverse	Function	Rotate	Function	Reverse
Speed	N/A	Speed	33	Speed	33	Speed	33	Speed	33	Speed	33	Speed	33	Speed	33
Navigation	N/A	Navigation	DR	Navigation	DR	Navigation	DR	Navigation	DR	Navigation	DR	Navigation	DR	Navigation	DR
Direction	N/A	Direction	Center	Direction	N/A	Direction	Center	Direction	N/A	Direction	Center	Direction	N/A	Direction	Center
Size	N/A	Size	66	Size	-90	Size	168	Size	90	Size	120	Size	-90	Size	84
Loss Of Guidance	N/A	Loss Of Guidance	N/A	Loss Of Guidance	N/A	Loss Of Guidance	N/A	Loss Of Guidance	N/A	Loss Of Guidance	N/A	Loss Of Guidance	N/A	Loss Of Guidance	N/A
Obstacle Avoidance	N/A	Obstacle Avoidance	1	Obstacle Avoidance	1	Obstacle Avoidance	1	Obstacle Avoidance	1	Obstacle Avoidance	1	Obstacle Avoidance	1	Obstacle Avoidance	1
Output	N/A	Output	N/A	Output	N/A	Output	N/A	Output	N/A	Output	N/A	Output	N/A	Output	#6- Pin Up
END OF STEP		**END OF STEP**		**END OF STEP**		**END OF STEP**		**END OF STEP**		**END OF STEP**		**END OF STEP**		**END OF STEP**	
END MODE	N/A	END MODE	Distance	END MODE	Distance	END MODE	Distance	END MODE	Distance	END MODE	Distance	END MODE	Distance	END MODE	Distance
END ACTION	Merge Bit #1 off	END ACTION	Merge	END ACTION	Merge	END ACTION	Merge	END ACTION	Merge	END ACTION	Merge	END ACTION	Merge	END ACTION	Merge
NEXT ROUTE	1	NEXT ROUTE	1	NEXT ROUTE	1	NEXT ROUTE	1	NEXT ROUTE	1	NEXT ROUTE	1	NEXT ROUTE	1	NEXT ROUTE	1
NEXT STEP	2	NEXT STEP	3	NEXT STEP	4	NEXT STEP	5	NEXT STEP	6	NEXT STEP	7	NEXT STEP	8	NEXT STEP	9

Route 1		Route 1		Route 1		Route 1		Route 1		Route 1		Route 1		Route 1	
Route	1	Route	1	Route	1	Route	1	Route	1	Route	1	Route	1	Route	1
Step	9	Step	10	Step	11	Step	12	Step	13	Step	14	Step	15	Step	16
STEP INITIATION		**STEP INITIATION**		**STEP INITIATION**		**STEP INITIATION**		**STEP INITIATION**		**STEP INITIATION**		**STEP INITIATION**		**STEP INITIATION**	
Go Mode	Input Triggers	Go Mode	Auto	Go Mode	Auto	Go Mode	Auto	Go Mode	Auto	Go Mode	Auto	Go Mode	Auto	Go Mode	Auto
Radio Input	N/A	Radio Input	N/A	Radio Input	N/A	Radio Input	N/A	Radio Input	N/A	Radio Input	N/A	Radio Input	N/A	Radio Input	N/A
Hard Wire Input	1- Cart Presence	Hard Wire Input	N/A	Hard Wire Input	N/A	Hard Wire Input	N/A	Hard Wire Input	N/A	Hard Wire Input	N/A	Hard Wire Input	N/A	Hard Wire Input	N/A
BIT	N/A	BIT	N/A	BIT	N/A	BIT	N/A	BIT	N/A	BIT	N/A	BIT	N/A	BIT	N/A
STEP ACTION		**STEP ACTION**		**STEP ACTION**		**STEP ACTION**		**STEP ACTION**		**STEP ACTION**		**STEP ACTION**		**STEP ACTION**	
Function	Delay	Function	Forward	Function	Rotate	Function	Forward	Function	Rotate	Function	Forward	Function	Rotate	Function	Forward
Speed	N/A	Speed	33	Speed	33	Speed	33	Speed	33	Speed	33	Speed	33	Speed	33
Navigation	DR	Navigation	DR	Navigation	DR	Navigation	DR	Navigation	DR	Navigation	DR	Navigation	DR	Navigation	DR
Direction	N/A	Direction	Center	Direction	N/A	Direction	Center	Direction	Center	Direction	Center	Direction	Center	Direction	Center
Size	3	Size	84	Size	90	Size	120	Size	-90	Size	248	Size	-90	Size	525
Loss Of Guidance	N/A	Loss Of Guidance	N/A	Loss Of Guidance	N/A	Loss Of Guidance	N/A	Loss Of Guidance	N/A	Loss Of Guidance	N/A	Loss Of Guidance	N/A	Loss Of Guidance	N/A
Obstacle Avoidance	1	Obstacle Avoidance	1	Obstacle Avoidance	1	Obstacle Avoidance	1	Obstacle Avoidance	1	Obstacle Avoidance	1	Obstacle Avoidance	1	Obstacle Avoidance	1
Output	#6- Pin Up	Output	#6- Pin Up	Output	#6- Pin Up	Output	#6- Pin Up	Output	#6- Pin Up	Output	#6- Pin Up	Output	#6- Pin Up	Output	#6- Pin Up
END OF STEP		**END OF STEP**		**END OF STEP**		**END OF STEP**		**END OF STEP**		**END OF STEP**		**END OF STEP**		**END OF STEP**	
END MODE	Time	END MODE	Distance	END MODE	Distance	END MODE	Distance	END MODE	Distance	END MODE	Distance	END MODE	Distance	END MODE	Distance
END ACTION	Merge	END ACTION	Merge	END ACTION	Merge	END ACTION	Merge	END ACTION	Merge	END ACTION	Merge	END ACTION	Merge	END ACTION	Merge
NEXT ROUTE	1	NEXT ROUTE	1	NEXT ROUTE	1	NEXT ROUTE	1	NEXT ROUTE	1	NEXT ROUTE	1	NEXT ROUTE	1	NEXT ROUTE	1
NEXT STEP	10	NEXT STEP	11	NEXT STEP	12	NEXT STEP	13	NEXT STEP	14	NEXT STEP	15	NEXT STEP	16	NEXT STEP	17

Route 1		Route 1		Route 1		Route 1		Route 1		Route 1		Route 1		Route 1	
Route	1	Route	1	Route	1	Route	1	Route	1	Route	1	Route	1	Route	1
Step	17	Step	18	Step	19	Step	20	Step	21	Step	22	Step	23	Step	24
STEP INITIATION		**STEP INITIATION**		**STEP INITIATION**		**STEP INITIATION**		**STEP INITIATION**		**STEP INITIATION**		**STEP INITIATION**		**STEP INITIATION**	
Go Mode	Auto	Go Mode	Auto	Go Mode	Auto	Go Mode	Auto	Go Mode	Auto	Go Mode	Auto	Go Mode	Auto	Go Mode	Auto
Radio Input	N/A	Radio Input	N/A	Radio Input	N/A	Radio Input	N/A	Radio Input	N/A	Radio Input	N/A	Radio Input	N/A	Radio Input	N/A
Hard Wire Input	N/A	Hard Wire Input	N/A	Hard Wire Input	N/A	Hard Wire Input	N/A	Hard Wire Input	N/A	Hard Wire Input	N/A	Hard Wire Input	N/A	Hard Wire Input	N/A
BIT	N/A	BIT	N/A	BIT	N/A	BIT	N/A	BIT	N/A	BIT	N/A	BIT	N/A	BIT	N/A
STEP ACTION		**STEP ACTION**		**STEP ACTION**		**STEP ACTION**		**STEP ACTION**		**STEP ACTION**		**STEP ACTION**		**STEP ACTION**	
Function	Rotate	Function	Forward	Function	Rotate	Function	Froward	Function	Rotate	Function	Forward	Function	Rotate	Function	Forward
Speed	33	Speed	33	Speed	33	Speed	33	Speed	33	Speed	33	Speed	33	Speed	33
Navigation	DR	Navigation	DR	Navigation	DR	Navigation	DR	Navigation	DR	Navigation	DR	Navigation	DR	Navigation	DR
Direction	Center	Direction	Center	Direction	Center	Direction	Center	Direction	Center	Direction	Center	Direction	Center	Direction	Center
Size	90	Size	962	Size	-90	Size	2284	Size	90	Size	1164	Size	90	Size	1665
Loss Of Guidance	N/A	Loss Of Guidance	N/A	Loss Of Guidance	N/A	Loss Of Guidance	N/A	Loss Of Guidance	N/A	Loss Of Guidance	N/A	Loss Of Guidance	N/A	Loss Of Guidance	N/A
Obstacle Avoidance	1	Obstacle Avoidance	1	Obstacle Avoidance	1	Obstacle Avoidance	1	Obstacle Avoidance	1	Obstacle Avoidance	1	Obstacle Avoidance	1	Obstacle Avoidance	1
Output	#6- Pin Up	Output	#6- Pin Up	Output	#6- Pin Up	Output	#6- Pin Up	Output	#6- Pin Up	Output	#6- Pin Up	Output	#6- Pin Up	Output	#6- Pin Up
END OF STEP		**END OF STEP**		**END OF STEP**		**END OF STEP**		**END OF STEP**		**END OF STEP**		**END OF STEP**		**END OF STEP**	
END MODE	Distance	END MODE	Distance	END MODE	Distance	END MODE	Distance	END MODE	Distance	END MODE	Distance	END MODE	Distance	END MODE	Distance
END ACTION	Merge	END ACTION	Merge	END ACTION	Merge	END ACTION	Merge	END ACTION	Merge	END ACTION	Merge	END ACTION	Merge	END ACTION	Merge
NEXT ROUTE	1	NEXT ROUTE	1	NEXT ROUTE	1	NEXT ROUTE	1	NEXT ROUTE	1	NEXT ROUTE	1	NEXT ROUTE	1	NEXT ROUTE	1
NEXT STEP	18	NEXT STEP	19	NEXT STEP	20	NEXT STEP	21	NEXT STEP	22	NEXT STEP	23	NEXT STEP	24	NEXT STEP	25

Route 1		Route 1		Route 1		Route 1		Route 1		Route 1		Route 1		Route 1	
Route	1	Route	1	Route	1	Route	1	Route	1	Route	1	Route	1	Route	1
Step	25	Step	26	Step	27	Step	28	Step	29	Step	30	Step	31	Step	32
STEP INITIATION		**STEP INITIATION**		**STEP INITIATION**		**STEP INITIATION**		**STEP INITIATION**		**STEP INITIATION**		**STEP INITIATION**		**STEP INITIATION**	
Go Mode	Auto	Go Mode	Auto	Go Mode	Auto	Go Mode	Auto	Go Mode	Auto	Go Mode	Auto	Go Mode	Auto	Go Mode	Auto
Radio Input	N/A	Radio Input	N/A	Radio Input	N/A	Radio Input	N/A	Radio Input	N/A	Radio Input	N/A	Radio Input	N/A	Radio Input	N/A
Hard Wire Input	N/A	Hard Wire Input	N/A	Hard Wire Input	N/A	Hard Wire Input	N/A	Hard Wire Input	N/A	Hard Wire Input	N/A	Hard Wire Input	N/A	Hard Wire Input	N/A
BIT	N/A	BIT	N/A	BIT	N/A	BIT	N/A	BIT	N/A	BIT	N/A	BIT	N/A	BIT	N/A
STEP ACTION		**STEP ACTION**		**STEP ACTION**		**STEP ACTION**		**STEP ACTION**		**STEP ACTION**		**STEP ACTION**		**STEP ACTION**	
Function	Rotate	Function	Reverse	Function	Delay	Function	Forward	Function	Rotate	Function	Reverse	Function	Rotate	Function	Reverse
Speed	33	Speed	33	Speed	33	Speed	33	Speed	33	Speed	33	Speed	33	Speed	33
Navigation	DR	Navigation	DR	Navigation	DR	Navigation	DR	Navigation	DR	Navigation	DR	Navigation	DR	Navigation	DR
Direction	Center	Direction	Center	Direction	Center	Direction	Center	Direction	Center	Direction	Center	Direction	Center	Direction	Center
Size	90	Size	104	Size	5	Size	104	Size	90	Size	66	Size	-90	Size	186
Loss Of Guidance	N/A	Loss Of Guidance	N/A	Loss Of Guidance	N/A	Loss Of Guidance	N/A	Loss Of Guidance	N/A	Loss Of Guidance	N/A	Loss Of Guidance	N/A	Loss Of Guidance	N/A
Obstacle Avoidance	1	Obstacle Avoidance	1	Obstacle Avoidance	1	Obstacle Avoidance	1	Obstacle Avoidance	1	Obstacle Avoidance	1	Obstacle Avoidance	1	Obstacle Avoidance	1
Output	#6- Pin Up	Output	#6- Pin Up	Output	7- Pin Dow	Output	N/a	Output	N/a	Output	N/a	Output	N/a	Output	#6- pin up
END OF STEP		**END OF STEP**		**END OF STEP**		**END OF STEP**		**END OF STEP**		**END OF STEP**		**END OF STEP**		**END OF STEP**	
END MODE	Distance	END MODE	Distance	END MODE	Distance	END MODE	Distance	END MODE	Distance	END MODE	Distance	END MODE	Distance	END MODE	Distance
END ACTION	Merge	END ACTION	Merge	END ACTION	Merge	END ACTION	Merge	END ACTION	Merge	END ACTION	Merge	END ACTION	Merge	END ACTION	Merge
NEXT ROUTE	1	NEXT ROUTE	1	NEXT ROUTE	1	NEXT ROUTE	1	NEXT ROUTE	1	NEXT ROUTE	1	NEXT ROUTE	1	NEXT ROUTE	1
NEXT STEP	26	NEXT STEP	27	NEXT STEP	28	NEXT STEP	29	NEXT STEP	30	NEXT STEP	31	NEXT STEP	32	NEXT STEP	33

Route 1		Route 1		Route 1		Route 1		Route 1		Route 1		Route 1		Route 1	
Route	1	Route	1	Route	1	Route	1	Route	1	Route	1	Route	1	Route	1
Step	33	Step	34	Step	35	Step	36	Step	37	Step	38	Step	39	Step	40
STEP INITIATION		STEP INITIATION		STEP INITIATION		STEP INITIATION		STEP INITIATION		STEP INITIATION		STEP INITIATION		STEP INITIATION	
Go Mode	Auto	Go Mode	Auto	Go Mode	Auto	Go Mode	Auto	Go Mode	Auto	Go Mode	Auto	Go Mode	Auto	Go Mode	Auto
Radio Input	N/A	Radio Input	N/A	Radio Input	N/A	Radio Input	N/A	Radio Input	N/A	Radio Input	N/A	Radio Input	N/A	Radio Input	N/A
Hard Wire Input	Cart prese	Hard Wire Input	N/a	Hard Wire Input	N/a	Hard Wire Input	N/a	Hard Wire Input	N/a	Hard Wire Input	N/a	Hard Wire Input	N/a	Hard Wire Input	N/a
BIT	N/A	BIT	N/A	BIT	N/A	BIT	N/A	BIT	N/A	BIT	N/A	BIT	N/A	BIT	N/A
STEP ACTION		STEP ACTION		STEP ACTION		STEP ACTION		STEP ACTION		STEP ACTION		STEP ACTION		STEP ACTION	
Function	Forward	Function	Rotate	Function	Forward	Function	Rotate	Function	Reverse	Function	Delay	Function	Forward	Function	Rotate
Speed	33	Speed	33	Speed	33	Speed	33	Speed	33	Speed	33	Speed	33	Speed	33
Navigation	DR	Navigation	DR	Navigation	DR	Navigation	DR	Navigation	DR	Navigation	DR	Navigation	DR	Navigation	DR
Direction	Center	Direction	Center	Direction	Center	Direction	Center	Direction	Center	Direction	Center	Direction	Center	Direction	Center
Size	186	Size	90	Size	66	Size	-135	Size	87	Size	5	Size	87	Size	45
Loss Of Guidance	N/A	Loss Of Guidance	N/A	Loss Of Guidance	N/A	Loss Of Guidance	N/A	Loss Of Guidance	N/A	Loss Of Guidance	N/A	Loss Of Guidance	N/A	Loss Of Guidance	N/A
Obstacle Avoidance	1	Obstacle Avoidance	1	Obstacle Avoidance	1	Obstacle Avoidance	1	Obstacle Avoidance	1	Obstacle Avoidance	1	Obstacle Avoidance	1	Obstacle Avoidance	1
Output	#6- pin up	Output	#6- pin up	Output	#6- pin up	Output	#6- pin up	Output	#6- pin up	Output	7-Pin Dow	Output	N/A	Output	N/A
END OF STEP		END OF STEP		END OF STEP		END OF STEP		END OF STEP		END OF STEP		END OF STEP		END OF STEP	
END MODE	Distance	END MODE	Distance	END MODE	Distance	END MODE	Distance	END MODE	Distance	END MODE	Time	END MODE	Distance	END MODE	Distance
END ACTION	Merge	END ACTION	Merge	END ACTION	Merge	END ACTION	Merge	END ACTION	Merge	END ACTION	Merge	END ACTION	Merge	END ACTION	Merge
NEXT ROUTE	1	NEXT ROUTE	1	NEXT ROUTE	1	NEXT ROUTE	1	NEXT ROUTE	1	NEXT ROUTE	1	NEXT ROUTE	1	NEXT ROUTE	1
NEXT STEP	34	NEXT STEP	35	NEXT STEP	36	NEXT STEP	37	NEXT STEP	38	NEXT STEP	39	NEXT STEP	40	NEXT STEP	41

Route 1		Route 1		Route 1		Route 1		Route 1		Route 1		Route 1		Route 1	
Route	1	Route	1	Route	1	Route	1	Route	1	Route	1	Route	1	Route	1
Step	41	Step	42	Step	43	Step	44	Step	45	Step	46	Step	47	Step	48
STEP INITIATION		STEP INITIATION		STEP INITIATION		STEP INITIATION		STEP INITIATION		STEP INITIATION		STEP INITIATION		STEP INITIATION	
Go Mode	Auto	Go Mode	Auto	Go Mode	Auto	Go Mode	Auto	Go Mode	Auto	Go Mode	Auto	Go Mode	Auto	Go Mode	Auto
Radio Input	N/A	Radio Input	N/A	Radio Input	N/A	Radio Input	N/A	Radio Input	N/A	Radio Input	N/A	Radio Input	N/A	Radio Input	N/A
Hard Wire Input	N/a	Hard Wire Input	Cart Prese	Hard Wire Input	N/A	Hard Wire Input	N/A	Hard Wire Input	N/A	Hard Wire Input	N/A	Hard Wire Input	N/A	Hard Wire Input	N/A
BIT	N/A	BIT	N/A	BIT	N/A	BIT	N/A	BIT	N/A	BIT	N/A	BIT	N/A	BIT	N/A
STEP ACTION		STEP ACTION		STEP ACTION		STEP ACTION		STEP ACTION		STEP ACTION		STEP ACTION		STEP ACTION	
Function	Reverse	Function	Forward	Function	Rotate	Function	Reverse	Function	Rotate	Function	Reverse	Function	Delay	Function	Forward
Speed	33	Speed	33	Speed	33	Speed	33	Speed	33	Speed	33	Speed	33	Speed	33
Navigation	DR	Navigation	DR	Navigation	DR	Navigation	DR	Navigation	DR	Navigation	DR	Navigation	DR	Navigation	DR
Direction	Center	Direction	Center	Direction	Center	Direction	Center	Direction	Center	Direction	Center	Direction	Center	Direction	Center
Size	104	Size	104	Size	90	Size	66	Size	-90	Size	186	Size	5	Size	186
Loss Of Guidance	N/A	Loss Of Guidance	N/A	Loss Of Guidance	N/A	Loss Of Guidance	N/A	Loss Of Guidance	N/A	Loss Of Guidance	N/A	Loss Of Guidance	N/A	Loss Of Guidance	N/A
Obstacle Avoidance	1	Obstacle Avoidance	1	Obstacle Avoidance	1	Obstacle Avoidance	1	Obstacle Avoidance	1	Obstacle Avoidance	1	Obstacle Avoidance	1	Obstacle Avoidance	1
Output	#6-Pin Up	Output	#6-Pin Up	Output	#6-Pin Up	Output	#6-Pin Up	Output	#6-Pin Up	Output	#6-Pin Up	Output	7-Pin Dow	Output	N/A
END OF STEP		END OF STEP		END OF STEP		END OF STEP		END OF STEP		END OF STEP		END OF STEP		END OF STEP	
END MODE	Distance	END MODE	Distance	END MODE	Distance	END MODE	Distance	END MODE	Distance	END MODE	Distance	END MODE	Time	END MODE	Distance
END ACTION	Merge	END ACTION	Merge	END ACTION	Merge	END ACTION	Merge	END ACTION	Merge	END ACTION	Merge	END ACTION	Merge	END ACTION	Merge
NEXT ROUTE	1	NEXT ROUTE	1	NEXT ROUTE	1	NEXT ROUTE	1	NEXT ROUTE	1	NEXT ROUTE	1	NEXT ROUTE	1	NEXT ROUTE	1
NEXT STEP	42	NEXT STEP	43	NEXT STEP	44	NEXT STEP	45	NEXT STEP	46	NEXT STEP	47	NEXT STEP	48	NEXT STEP	49

Route 1		Route 1		Route 1		Route 1		Route 1		Route 1		Route 1		Route 1	
Route	1	Route	1	Route	1	Route	1	Route	1	Route	1	Route	1	Route	1
Step	49	Step	50	Step	51	Step	52	Step	53	Step	54	Step	55	Step	56
STEP INITIATION		STEP INITIATION		STEP INITIATION		STEP INITIATION		STEP INITIATION		STEP INITIATION		STEP INITIATION		STEP INITIATION	
Go Mode	Auto	Go Mode	Auto	Go Mode	Auto	Go Mode	Auto	Go Mode	Auto	Go Mode	Auto	Go Mode	Auto	Go Mode	Auto
Radio Input	N/A	Radio Input	N/A	Radio Input	N/A	Radio Input	N/A	Radio Input	N/A	Radio Input	N/A	Radio Input	N/A	Radio Input	N/A
Hard Wire Input	N/A	Hard Wire Input	N/A	Hard Wire Input	N/A	Hard Wire Input	N/A	Hard Wire Input	Cart Prese	Hard Wire Input	N/a	Hard Wire Input	N/a	Hard Wire Input	N/a
BIT	N/A	BIT	N/A	BIT	N/A	BIT	N/A	BIT	N/A	BIT	N/A	BIT	N/A	BIT	N/A
STEP ACTION		STEP ACTION		STEP ACTION		STEP ACTION		STEP ACTION		STEP ACTION		STEP ACTION		STEP ACTION	
Function	Rotate	Function	Forward	Function	Rotate	Function	Reverse	Function	Forward	Function	Rotate	Function	Forward	Function	Rotate
Speed	33	Speed	33	Speed	33	Speed	33	Speed	33	Speed	33	Speed	33	Speed	33
Navigation	DR	Navigation	DR	Navigation	DR	Navigation	DR	Navigation	DR	Navigation	DR	Navigation	DR	Navigation	DR
Direction	Center	Direction	Center	Direction	Center	Direction	Center	Direction	Center	Direction	Center	Direction	Center	Direction	Center
Size	90	Size	66	Size	-135	Size	87	Size	87	Size	135	Size	1665	Size	-90
Loss Of Guidance	N/A	Loss Of Guidance	N/A	Loss Of Guidance	N/A	Loss Of Guidance	N/A	Loss Of Guidance	N/A	Loss Of Guidance	N/A	Loss Of Guidance	N/A	Loss Of Guidance	N/A
Obstacle Avoidance	1	Obstacle Avoidance	1	Obstacle Avoidance	1	Obstacle Avoidance	1	Obstacle Avoidance	1	Obstacle Avoidance	1	Obstacle Avoidance	1	Obstacle Avoidance	1
Output	N/A	Output	N/A	Output	N/A	Output	#6-Pin Up	Output	#6-Pin Up	Output	#6-Pin Up	Output	#6-Pin Up	Output	#6-Pin Up
END OF STEP		END OF STEP		END OF STEP		END OF STEP		END OF STEP		END OF STEP		END OF STEP		END OF STEP	
END MODE	Distance	END MODE	Distance	END MODE	Distance	END MODE	Distance	END MODE	Distance	END MODE	Distance	END MODE	Distance	END MODE	Distance
END ACTION	Merge	END ACTION	Merge	END ACTION	Merge	END ACTION	Merge	END ACTION	Merge	END ACTION	Merge	END ACTION	Merge	END ACTION	Merge
NEXT ROUTE	1	NEXT ROUTE	1	NEXT ROUTE	1	NEXT ROUTE	1	NEXT ROUTE	1	NEXT ROUTE	1	NEXT ROUTE	1	NEXT ROUTE	1
NEXT STEP	50	NEXT STEP	51	NEXT STEP	52	NEXT STEP	53	NEXT STEP	54	NEXT STEP	55	NEXT STEP	56	NEXT STEP	57

Route 1		Route 1		Route 1		Route 1		Route 1		Route 1		Route 1		Route 1	
Route	1	Route	1	Route	1	Route	1	Route	1	Route	1	Route	1	Route	1
Step	57	Step	58	Step	59	Step	60	Step	61	Step	62	Step	63	Step	64
STEP INITIATION		STEP INITIATION		STEP INITIATION		STEP INITIATION		STEP INITIATION		STEP INITIATION		STEP INITIATION		STEP INITIATION	
Go Mode	Auto	Go Mode	Auto	Go Mode	Auto	Go Mode	Auto	Go Mode	Auto	Go Mode	Auto	Go Mode	Auto	Go Mode	Auto
Radio Input	N/A	Radio Input	N/A	Radio Input	N/A	Radio Input	N/A	Radio Input	N/A	Radio Input	N/A	Radio Input	N/A	Radio Input	N/A
Hard Wire Input	N/a	Hard Wire Input	N/a	Hard Wire Input	N/a	Hard Wire Input	N/a	Hard Wire Input	N/a	Hard Wire Input	N/a	Hard Wire Input	N/a	Hard Wire Input	N/a
BIT	N/A	BIT	N/A	BIT	N/A	BIT	N/A	BIT	N/A	BIT	N/A	BIT	N/A	BIT	N/A
STEP ACTION		STEP ACTION		STEP ACTION		STEP ACTION		STEP ACTION		STEP ACTION		STEP ACTION		STEP ACTION	
Function	Forward	Function	Rotate	Function	Forward	Function	Rotate	Function	Forward	Function	Rotate	Function	Forward	Function	Rotate
Speed	33	Speed	33	Speed	33	Speed	33	Speed	33	Speed	33	Speed	33	Speed	33
Navigation	DR	Navigation	DR	Navigation	DR	Navigation	DR	Navigation	DR	Navigation	DR	Navigation	DR	Navigation	DR
Direction	Center	Direction	Center	Direction	Center	Direction	Center	Direction	Center	Direction	Center	Direction	Center	Direction	Center
Size	1164	Size	-90	Size	2284	Size	90	Size	962	Size	-90	Size	525	Size	90
Loss Of Guidance	N/A	Loss Of Guidance	N/A	Loss Of Guidance	N/A	Loss Of Guidance	N/A	Loss Of Guidance	N/A	Loss Of Guidance	N/A	Loss Of Guidance	N/A	Loss Of Guidance	N/A
Obstacle Avoidance	1	Obstacle Avoidance	1	Obstacle Avoidance	1	Obstacle Avoidance	1	Obstacle Avoidance	1	Obstacle Avoidance	1	Obstacle Avoidance	1	Obstacle Avoidance	1
Output	#6-Pin Up	Output	#6-Pin Up	Output	#6-Pin Up	Output	#6-Pin Up	Output	#6-Pin Up	Output	#6-Pin Up	Output	#6-Pin Up	Output	#6-Pin Up
END OF STEP		END OF STEP		END OF STEP		END OF STEP		END OF STEP		END OF STEP		END OF STEP		END OF STEP	
END MODE	Distance	END MODE	Distance	END MODE	Distance	END MODE	Distance	END MODE	Distance	END MODE	Distance	END MODE	Distance	END MODE	Distance
END ACTION	Merge	END ACTION	Merge	END ACTION	Merge	END ACTION	Merge	END ACTION	Merge	END ACTION	Merge	END ACTION	Merge	END ACTION	Merge
NEXT ROUTE	1	NEXT ROUTE	1	NEXT ROUTE	1	NEXT ROUTE	1	NEXT ROUTE	1	NEXT ROUTE	1	NEXT ROUTE	1	NEXT ROUTE	1
NEXT STEP	58	NEXT STEP	59	NEXT STEP	60	NEXT STEP	61	NEXT STEP	62	NEXT STEP	63	NEXT STEP	64	NEXT STEP	65

Route 1		Route 1		Route 1		Route 1		Route 1		Route 1		Route 1		Route 1	
Route	1	Route	1	Route	1	Route	1	Route	1	Route	1	Route	1	Route	1
Step	65	Step	66	Step	67	Step	68	Step	69	Step	70	Step	71	Step	72
STEP INITIATION		**STEP INITIATION**		**STEP INITIATION**		**STEP INITIATION**		**STEP INITIATION**		**STEP INITIATION**		**STEP INITIATION**		**STEP INITIATION**	
Go Mode	Auto	Go Mode	Auto	Go Mode	Auto	Go Mode	Auto	Go Mode	Auto	Go Mode	Auto	Go Mode	Auto	Go Mode	Auto
Radio Input	N/A	Radio Input	N/A	Radio Input	N/A	Radio Input	N/A	Radio Input	N/A	Radio Input	N/A	Radio Input	N/A	Radio Input	N/A
Hard Wire Input	N/a	Hard Wire Input	N/a	Hard Wire Input	N/a	Hard Wire Input	N/a	Hard Wire Input	N/a	Hard Wire Input	N/a	Hard Wire Input	N/a	Hard Wire Input	N/a
BIT	N/A	BIT	N/A	BIT	N/A	BIT	N/A	BIT	N/A	BIT	N/A	BIT	N/A	BIT	N/A
STEP ACTION		**STEP ACTION**		**STEP ACTION**		**STEP ACTION**		**STEP ACTION**		**STEP ACTION**		**STEP ACTION**		**STEP ACTION**	
Function	Forward	Function	Rotate	Function	Reverse	Function	Rotate	Function	Reverse	Function	Delay	Function	Forward	Function	Rotate
Speed	33	Speed	33	Speed	33	Speed	33	Speed	33	Speed	33	Speed	33	Speed	33
Navigation	DR	Navigation	DR	Navigation	DR	Navigation	DR	Navigation	DR	Navigation	DR	Navigation	DR	Navigation	DR
Direction	Center	Direction	Center	Direction	Center	Direction	Center	Direction	Center	Direction	Center	Direction	Center	Direction	Center
Size	248	Size	-90	Size	120	Size	-90	Size	84	Size	5	Size	84	Size	90
Loss Of Guidance	N/A	Loss Of Guidance	N/A	Loss Of Guidance	N/A	Loss Of Guidance	N/A	Loss Of Guidance	N/A	Loss Of Guidance	N/A	Loss Of Guidance	N/A	Loss Of Guidance	N/A
Obstacle Avoidance	1	Obstacle Avoidance	1	Obstacle Avoidance	1	Obstacle Avoidance	1	Obstacle Avoidance	1	Obstacle Avoidance	1	Obstacle Avoidance	1	Obstacle Avoidance	1
Output	#6-Pin Up	Output	#6-Pin Up	Output	#6-Pin Up	Output	#6-Pin Up	Output	#6-Pin Up	Output	7-Pin dow	Output		Output	
END OF STEP		**END OF STEP**		**END OF STEP**		**END OF STEP**		**END OF STEP**		**END OF STEP**		**END OF STEP**		**END OF STEP**	
END MODE	Distance	END MODE	Distance	END MODE	Distance	END MODE	Distance	END MODE	Distance	END MODE	Distance	END MODE	Distance	END MODE	Distance
END ACTION	Merge	END ACTION	Merge	END ACTION	Merge	END ACTION	Merge	END ACTION	Merge	END ACTION	Merge	END ACTION	Merge	END ACTION	Merge
NEXT ROUTE	1	NEXT ROUTE	1	NEXT ROUTE	1	NEXT ROUTE	1	NEXT ROUTE	1	NEXT ROUTE	1	NEXT ROUTE	1	NEXT ROUTE	1
NEXT STEP	66	NEXT STEP	67	NEXT STEP	68	NEXT STEP	69	NEXT STEP	70	NEXT STEP	71	NEXT STEP	72	NEXT STEP	73

Route 1		Route 1		Route 1		Route 1		Route 1		Route 0: 1	
Route	1	Route	1	Route	1	Route	1	Route	1	**STEP INITIATION**	
Step	73	Step	74	Step	75	Step	76	Step	77	**Go Mode**	nput Trigge
STEP INITIATION		**STEP INITIATION**		**STEP INITIATION**		**STEP INITIATION**		**STEP INITIATION**		**Radio Input**	adio Input 1
Go Mode	Auto	Go Mode	Auto	Go Mode	Auto	Go Mode	Auto	Go Mode	Auto	**Hard Wire Input**	N/a
Radio Input	N/A	Radio Input	N/A	Radio Input	N/A	Radio Input	N/A	Radio Input	N/A	**BIT**	BIT #1-#10
Hard Wire Input	N/a	Hard Wire Input	N/a	Hard Wire Input	N/a	Hard Wire Input	N/a	Hard Wire Input	N/a		
BIT	N/A	BIT	N/A	BIT	N/A	BIT	N/A	BIT	N/A		
STEP ACTION		**STEP ACTION**		**STEP ACTION**		**STEP ACTION**		**STEP ACTION**		**STEP ACTION**	
Function	Forward	Function	Rotate	Function	Reverse	Function	Rotate	Function	Reverse	**Function**	Auto
Speed	33	Speed	33	Speed	33	Speed	33	Speed	33	**Speed**	33
Navigation	DR	Navigation	DR	Navigation	DR	Navigation	DR	Navigation	DR	**Navigation**	DR
Direction	Center	Direction	Center	Direction	Center	Direction	Center	Direction	Center	**Direction**	Center
Size	120	Size	-90	Size	168	Size	90	Size	66	**Size**	66
Loss Of Guidance	N/A	Loss Of Guidance	N/A	Loss Of Guidance	N/A	Loss Of Guidance	N/A	Loss Of Guidance	N/A	**Loss Of Guidance**	N/A
Obstacle Avoidance	1	Obstacle Avoidance	1	Obstacle Avoidance	1	Obstacle Avoidance	1	Obstacle Avoidance	1	**Obstacle Avoidance**	1
Output		Output		Output		Output		Output		**Output**	N/a
END OF STEP		**END OF STEP**		**END OF STEP**		**END OF STEP**		**END OF STEP**		**END OF STEP**	
END MODE	Distance	END MODE	Distance	END MODE	Distance	END MODE	Distance	END MODE	Distance	**END MODE**	Distance
END ACTION	Merge	END ACTION	Merge	END ACTION	Merge	END ACTION	Merge	END ACTION	rge Bit #2	**END ACTION**	Merge
NEXT ROUTE	1	NEXT ROUTE	1	NEXT ROUTE	1	NEXT ROUTE	1	NEXT ROUTE	0	**NEXT ROUTE**	0
NEXT STEP	74	NEXT STEP	75	NEXT STEP	76	NEXT STEP	77	NEXT STEP	1	**NEXT STEP**	1

Tier 2 Route 2

Route 2		Route 2		Route 2		Route 2		Route 2		Route 2		Route 2		Route 2	
Route	2	Route	2	Route	2	Route	2	Route	2	Route	2	Route	2	Route	2
Step	1	Step	2	Step	3	Step	4	Step	5	Step	6	Step	7	Step	8
STEP INITIATION		**STEP INITIATION**		**STEP INITIATION**		**STEP INITIATION**		**STEP INITIATION**		**STEP INITIATION**		**STEP INITIATION**		**STEP INITIATION**	
Go Mode	Input Triggers	Go Mode	Auto	Go Mode	Auto	Go Mode	Auto	Go Mode	Auto	Go Mode	Auto	Go Mode	Auto	Go Mode	Auto
Radio Input	Radio #1 "Ford"	Radio Input	N/A	Radio Input	N/A	Radio Input	N/A	Radio Input	N/A	Radio Input	N/A	Radio Input	N/A	Radio Input	N/A
Home RFID	Radio #2 "Bin Full"														
Hard Wire Input	N/A	Hard Wire Input	N/A	Hard Wire Input	N/A	Hard Wire Input	N/A	Hard Wire Input	N/A	Hard Wire Input	N/A	Hard Wire Input	N/A	Hard Wire Input	N/A
BIT	Bit #1 On Bit #3 On	BIT	N/A	BIT	N/A	BIT	N/A	BIT	N/A	BIT	N/A	BIT	N/A	BIT	N/A
STEP ACTION		**STEP ACTION**		**STEP ACTION**		**STEP ACTION**		**STEP ACTION**		**STEP ACTION**		**STEP ACTION**		**STEP ACTION**	
Function	Dispatch	Function	Forward	Function	Rotate	Function	Forward	Function	Rotate	Function	Reverse	Function	Rotate	Function	Reverse
Speed	N/A	Speed	33	Speed	33	Speed	33	Speed	33	Speed	33	Speed	33	Speed	33
Navigation	N/A	Navigation	DR	Navigation	DR	Navigation	DR	Navigation	DR	Navigation	DR	Navigation	DR	Navigation	DR
Direction	N/A	Direction	Center	Direction	N/A	Direction	Center	Direction	N/A	Direction	Center	Direction	N/A	Direction	Center
Size	N/A	Size	66	Size	-90	Size	168	Size	90	Size	57	Size	-90	Size	84
Loss Of Guidance	N/A	Loss Of Guidance	N/A	Loss Of Guidance	N/A	Loss Of Guidance	N/A	Loss Of Guidance	N/A	Loss Of Guidance	N/A	Loss Of Guidance	N/A	Loss Of Guidance	N/A
Obstacle Avoidance	N/A	Obstacle Avoidance	1	Obstacle Avoidance	1	Obstacle Avoidance	1	Obstacle Avoidance	1	Obstacle Avoidance	1	Obstacle Avoidance	1	Obstacle Avoidance	1
Output	N/A	Output	N/A	Output	N/A	Output	N/A	Output	N/A	Output	N/A	Output	N/A	Output	#6- Pin Up
END OF STEP		**END OF STEP**		**END OF STEP**		**END OF STEP**		**END OF STEP**		**END OF STEP**		**END OF STEP**		**END OF STEP**	
END MODE	N/A	END MODE	Distance	END MODE	Distance	END MODE	Distance	END MODE	Distance	END MODE	Distance	END MODE	Distance	END MODE	Distance
END ACTION	Merge Bit #1 off	END ACTION	Merge	END ACTION	Merge	END ACTION	Merge	END ACTION	Merge	END ACTION	Merge	END ACTION	Merge	END ACTION	Merge
NEXT ROUTE	2	NEXT ROUTE	2	NEXT ROUTE	2	NEXT ROUTE	2	NEXT ROUTE	2	NEXT ROUTE	2	NEXT ROUTE	2	NEXT ROUTE	2
NEXT STEP	2	NEXT STEP	3	NEXT STEP	4	NEXT STEP	5	NEXT STEP	6	NEXT STEP	7	NEXT STEP	8	NEXT STEP	9

Route 2		Route 2		Route 2		Route 2		Route 2		Route 2		Route 2		Route 2	
Route	2	Route	2	Route	2	Route	2	Route	2	Route	2	Route	2	Route	2
Step	9	Step	10	Step	11	Step	12	Step	13	Step	14	Step	15	Step	16
STEP INITIATION		**STEP INITIATION**		**STEP INITIATION**		**STEP INITIATION**		**STEP INITIATION**		**STEP INITIATION**		**STEP INITIATION**		**STEP INITIATION**	
Go Mode	Input Triggers	Go Mode	Auto	Go Mode	Auto	Go Mode	Auto	Go Mode	Auto	Go Mode	Auto	Go Mode	Auto	Go Mode	Auto
Radio Input	N/A	Radio Input	N/A	Radio Input	N/A	Radio Input	N/A	Radio Input	N/A	Radio Input	N/A	Radio Input	N/A	Radio Input	N/A
Hard Wire Input	1- Cart Presence	Hard Wire Input	N/A	Hard Wire Input	N/A	Hard Wire Input	N/A	Hard Wire Input	N/A	Hard Wire Input	N/A	Hard Wire Input	N/A	Hard Wire Input	N/A
BIT	N/A	BIT	N/A	BIT	N/A	BIT	N/A	BIT	N/A	BIT	N/A	BIT	N/A	BIT	N/A
STEP ACTION		**STEP ACTION**		**STEP ACTION**		**STEP ACTION**		**STEP ACTION**		**STEP ACTION**		**STEP ACTION**		**STEP ACTION**	
Function	Delay	Function	Forward	Function	Rotate	Function	Forward	Function	Rotate	Function	Forward	Function	Rotate	Function	Forward
Speed	N/A	Speed	33	Speed	33	Speed	33	Speed	33	Speed	33	Speed	33	Speed	33
Navigation	DR	Navigation	DR	Navigation	DR	Navigation	DR	Navigation	DR	Navigation	DR	Navigation	DR	Navigation	DR
Direction	N/A	Direction	Center	Direction	N/A	Direction	Center	Direction	Center	Direction	Center	Direction	Center	Direction	Center
Size	3	Size	84	Size	90	Size	57	Size	-90	Size	248	Size	-90	Size	525
Loss Of Guidance	N/A	Loss Of Guidance	N/A	Loss Of Guidance	N/A	Loss Of Guidance	N/A	Loss Of Guidance	N/A	Loss Of Guidance	N/A	Loss Of Guidance	N/A	Loss Of Guidance	N/A
Obstacle Avoidance	1	Obstacle Avoidance	1	Obstacle Avoidance	1	Obstacle Avoidance	1	Obstacle Avoidance	1	Obstacle Avoidance	1	Obstacle Avoidance	1	Obstacle Avoidance	1
Output	#6- Pin Up	Output	#6- Pin Up	Output	#6- Pin Up	Output	#6- Pin Up	Output	#6- Pin Up	Output	#6- Pin Up	Output	#6- Pin Up	Output	#6- Pin Up
END OF STEP		**END OF STEP**		**END OF STEP**		**END OF STEP**		**END OF STEP**		**END OF STEP**		**END OF STEP**		**END OF STEP**	
END MODE	Time	END MODE	Distance	END MODE	Distance	END MODE	Distance	END MODE	Distance	END MODE	Distance	END MODE	Distance	END MODE	Distance
END ACTION	Merge	END ACTION	Merge	END ACTION	Merge	END ACTION	Merge	END ACTION	Merge	END ACTION	Merge	END ACTION	Merge	END ACTION	Merge
NEXT ROUTE	2	NEXT ROUTE	2	NEXT ROUTE	2	NEXT ROUTE	2	NEXT ROUTE	2	NEXT ROUTE	2	NEXT ROUTE	2	NEXT ROUTE	2
NEXT STEP	10	NEXT STEP	11	NEXT STEP	12	NEXT STEP	13	NEXT STEP	14	NEXT STEP	15	NEXT STEP	16	NEXT STEP	17

Route 2		Route 2		Route 2		Route 2		Route 2		Route 2		Route 2		Route 2	
Route	2	Route	2	Route	2	Route	2	Route	2	Route	2	Route	2	Route	2
Step	17	Step	18	Step	19	Step	20	Step	21	Step	22	Step	23	Step	24
STEP INITIATION		**STEP INITIATION**		**STEP INITIATION**		**STEP INITIATION**		**STEP INITIATION**		**STEP INITIATION**		**STEP INITIATION**		**STEP INITIATION**	
Go Mode	Auto	Go Mode	Auto	Go Mode	Auto	Go Mode	Auto	Go Mode	Auto	Go Mode	Auto	Go Mode	Auto	Go Mode	Auto
Radio Input	N/A	Radio Input	N/A	Radio Input	N/A	Radio Input	N/A	Radio Input	N/A	Radio Input	N/A	Radio Input	N/A	Radio Input	N/A
Hard Wire Input	N/A	Hard Wire Input	N/A	Hard Wire Input	N/A	Hard Wire Input	N/A	Hard Wire Input	N/A	Hard Wire Input	N/A	Hard Wire Input	N/A	Hard Wire Input	N/A
BIT	N/A	BIT	N/A	BIT	N/A	BIT	N/A	BIT	N/A	BIT	N/A	BIT	N/A	BIT	N/A
STEP ACTION		**STEP ACTION**		**STEP ACTION**		**STEP ACTION**		**STEP ACTION**		**STEP ACTION**		**STEP ACTION**		**STEP ACTION**	
Function	Rotate	Function	Forward	Function	Rotate	Function	Froward	Function	Rotate	Function	Forward	Function	Rotate	Function	Forward
Speed	33	Speed	33	Speed	33	Speed	33	Speed	33	Speed	33	Speed	33	Speed	33
Navigation	DR	Navigation	DR	Navigation	DR	Navigation	DR	Navigation	DR	Navigation	DR	Navigation	DR	Navigation	DR
Direction	Center	Direction	Center	Direction	Center	Direction	Center	Direction	Center	Direction	Center	Direction	Center	Direction	Center
Size	90	Size	962	Size	-90	Size	2284	Size	90	Size	1164	Size	90	Size	1665
Loss Of Guidance	N/A	Loss Of Guidance	N/A	Loss Of Guidance	N/A	Loss Of Guidance	N/A	Loss Of Guidance	N/A	Loss Of Guidance	N/A	Loss Of Guidance	N/A	Loss Of Guidance	N/A
Obstacle Avoidance	1	Obstacle Avoidance	1	Obstacle Avoidance	1	Obstacle Avoidance	1	Obstacle Avoidance	1	Obstacle Avoidance	1	Obstacle Avoidance	1	Obstacle Avoidance	1
Output	#6- Pin Up	Output	#6- Pin Up	Output	#6- Pin Up	Output	#6- Pin Up	Output	#6- Pin Up	Output	#6- Pin Up	Output	#6- Pin Up	Output	#6- Pin Up
END OF STEP		**END OF STEP**		**END OF STEP**		**END OF STEP**		**END OF STEP**		**END OF STEP**		**END OF STEP**		**END OF STEP**	
END MODE	Distance	END MODE	Distance	END MODE	Distance	END MODE	Distance	END MODE	Distance	END MODE	Distance	END MODE	Distance	END MODE	Distance
END ACTION	Merge	END ACTION	Merge	END ACTION	Merge	END ACTION	Merge	END ACTION	Merge	END ACTION	Merge	END ACTION	Merge	END ACTION	Merge
NEXT ROUTE	2	NEXT ROUTE	2	NEXT ROUTE	2	NEXT ROUTE	2	NEXT ROUTE	2	NEXT ROUTE	2	NEXT ROUTE	2	NEXT ROUTE	2
NEXT STEP	18	NEXT STEP	19	NEXT STEP	20	NEXT STEP	21	NEXT STEP	22	NEXT STEP	23	NEXT STEP	24	NEXT STEP	25

Route 2		Route 2		Route 2		Route 2		Route 2		Route 2		Route 2		Route 2	
Route	2	Route	2	Route	2	Route	2	Route	2	Route	2	Route	2	Route	2
Step	25	Step	26	Step	27	Step	28	Step	29	Step	30	Step	31	Step	32
STEP INITIATION		**STEP INITIATION**		**STEP INITIATION**		**STEP INITIATION**		**STEP INITIATION**		**STEP INITIATION**		**STEP INITIATION**		**STEP INITIATION**	
Go Mode	Auto	Go Mode	Auto	Go Mode	Auto	Go Mode	Auto	Go Mode	Auto	Go Mode	Auto	Go Mode	Auto	Go Mode	Auto
Radio Input	N/A	Radio Input	N/A	Radio Input	N/A	Radio Input	N/A	Radio Input	N/A	Radio Input	N/A	Radio Input	N/A	Radio Input	N/A
Hard Wire Input	N/A	Hard Wire Input	N/A	Hard Wire Input	N/A	Hard Wire Input	N/A	Hard Wire Input	N/A	Hard Wire Input	N/A	Hard Wire Input	N/A	Hard Wire Input	N/A
BIT	N/A	BIT	N/A	BIT	N/A	BIT	N/A	BIT	N/A	BIT	N/A	BIT	N/A	BIT	N/A
STEP ACTION		**STEP ACTION**		**STEP ACTION**		**STEP ACTION**		**STEP ACTION**		**STEP ACTION**		**STEP ACTION**		**STEP ACTION**	
Function	Rotate	Function	Reverse	Function	Delay	Function	Forward	Function	Rotate	Function	Reverse	Function	Rotate	Function	Reverse
Speed	33	Speed	33	Speed	33	Speed	33	Speed	33	Speed	33	Speed	33	Speed	33
Navigation	DR	Navigation	DR	Navigation	DR	Navigation	DR	Navigation	DR	Navigation	DR	Navigation	DR	Navigation	DR
Direction	Center	Direction	Center	Direction	Center	Direction	Center	Direction	Center	Direction	Center	Direction	Center	Direction	Center
Size	90	Size	104	Size	5	Size	104	Size	90	Size	66	Size	-90	Size	186
Loss Of Guidance	N/A	Loss Of Guidance	N/A	Loss Of Guidance	N/A	Loss Of Guidance	N/A	Loss Of Guidance	N/A	Loss Of Guidance	N/A	Loss Of Guidance	N/A	Loss Of Guidance	N/A
Obstacle Avoidance	1	Obstacle Avoidance	1	Obstacle Avoidance	1	Obstacle Avoidance	1	Obstacle Avoidance	1	Obstacle Avoidance	1	Obstacle Avoidance	1	Obstacle Avoidance	1
Output	#6- Pin Up	Output	#6- Pin Up	Output	7- Pin Dow	Output	N/a	Output	N/a	Output	N/a	Output	N/a	Output	#6- pin up
END OF STEP		**END OF STEP**		**END OF STEP**		**END OF STEP**		**END OF STEP**		**END OF STEP**		**END OF STEP**		**END OF STEP**	
END MODE	Distance	END MODE	Distance	END MODE	Distance	END MODE	Distance	END MODE	Distance	END MODE	Distance	END MODE	Distance	END MODE	Distance
END ACTION	Merge	END ACTION	Merge	END ACTION	Merge	END ACTION	Merge	END ACTION	Merge	END ACTION	Merge	END ACTION	Merge	END ACTION	Merge
NEXT ROUTE	2	NEXT ROUTE	2	NEXT ROUTE	2	NEXT ROUTE	2	NEXT ROUTE	2	NEXT ROUTE	2	NEXT ROUTE	2	NEXT ROUTE	2
NEXT STEP	26	NEXT STEP	27	NEXT STEP	28	NEXT STEP	29	NEXT STEP	30	NEXT STEP	31	NEXT STEP	32	NEXT STEP	33

Route 2		Route 2		Route 2		Route 2		Route 2		Route 2		Route 2		Route 2	
Route	2	Route	2	Route	2	Route	2	Route	2	Route	2	Route	2	Route	2
Step	33	Step	34	Step	35	Step	36	Step	37	Step	38	Step	39	Step	40
STEP INITIATION		STEP INITIATION		STEP INITIATION		STEP INITIATION		STEP INITIATION		STEP INITIATION		STEP INITIATION		STEP INITIATION	
Go Mode	Auto	Go Mode	Auto	Go Mode	Auto	Go Mode	Auto	Go Mode	Auto	Go Mode	Auto	Go Mode	Auto	Go Mode	Auto
Radio Input	N/A	Radio Input	N/A	Radio Input	N/A	Radio Input	N/A	Radio Input	N/A	Radio Input	N/A	Radio Input	N/A	Radio Input	N/A
Hard Wire Input	Cart prese	Hard Wire Input	N/a	Hard Wire Input	N/a	Hard Wire Input	N/a	Hard Wire Input	N/a	Hard Wire Input	N/a	Hard Wire Input	N/a	Hard Wire Input	N/a
BIT	N/A	BIT	N/A	BIT	N/A	BIT	N/A	BIT	N/A	BIT	N/A	BIT	N/A	BIT	N/A
STEP ACTION		STEP ACTION		STEP ACTION		STEP ACTION		STEP ACTION		STEP ACTION		STEP ACTION		STEP ACTION	
Function	Forward	Function	Rotate	Function	Forward	Function	Rotate	Function	Reverse	Function	Delay	Function	Forward	Function	Rotate
Speed	33	Speed	33	Speed	33	Speed	33	Speed	33	Speed	33	Speed	33	Speed	33
Navigation	DR	Navigation	DR	Navigation	DR	Navigation	DR	Navigation	DR	Navigation	DR	Navigation	DR	Navigation	DR
Direction	Center	Direction	Center	Direction	Center	Direction	Center	Direction	Center	Direction	Center	Direction	Center	Direction	Center
Size	186	Size	90	Size	66	Size	-135	Size	87	Size	5	Size	87	Size	45
Loss Of Guidance	N/A	Loss Of Guidance	N/A	Loss Of Guidance	N/A	Loss Of Guidance	N/A	Loss Of Guidance	N/A	Loss Of Guidance	N/A	Loss Of Guidance	N/A	Loss Of Guidance	N/A
Obstacle Avoidance	1	Obstacle Avoidance	1	Obstacle Avoidance	1	Obstacle Avoidance	1	Obstacle Avoidance	1	Obstacle Avoidance	1	Obstacle Avoidance	1	Obstacle Avoidance	1
Output	#6- pin up	Output	#6- pin up	Output	#6- pin up	Output	#6- pin up	Output	#6- pin up	Output	7-Pin Dow	Output	N/A	Output	N/A
END OF STEP		END OF STEP		END OF STEP		END OF STEP		END OF STEP		END OF STEP		END OF STEP		END OF STEP	
END MODE	Distance	END MODE	Distance	END MODE	Distance	END MODE	Distance	END MODE	Distance	END MODE	Time	END MODE	Distance	END MODE	Distance
END ACTION	Merge	END ACTION	Merge	END ACTION	Merge	END ACTION	Merge	END ACTION	Merge	END ACTION	Merge	END ACTION	Merge	END ACTION	Merge
NEXT ROUTE	2	NEXT ROUTE	2	NEXT ROUTE	2	NEXT ROUTE	2	NEXT ROUTE	2	NEXT ROUTE	2	NEXT ROUTE	2	NEXT ROUTE	2
NEXT STEP	34	NEXT STEP	35	NEXT STEP	36	NEXT STEP	37	NEXT STEP	38	NEXT STEP	39	NEXT STEP	40	NEXT STEP	41

Route 2		Route 2		Route 2		Route 2		Route 2		Route 2		Route 2		Route 2	
Route	2	Route	2	Route	2	Route	2	Route	2	Route	2	Route	2	Route	2
Step	41	Step	42	Step	43	Step	44	Step	45	Step	46	Step	47	Step	48
STEP INITIATION		STEP INITIATION		STEP INITIATION		STEP INITIATION		STEP INITIATION		STEP INITIATION		STEP INITIATION		STEP INITIATION	
Go Mode	Auto	Go Mode	Auto	Go Mode	Auto	Go Mode	Auto	Go Mode	Auto	Go Mode	Auto	Go Mode	Auto	Go Mode	Auto
Radio Input	N/A	Radio Input	N/A	Radio Input	N/A	Radio Input	N/A	Radio Input	N/A	Radio Input	N/A	Radio Input	N/A	Radio Input	N/A
Hard Wire Input	N/a	Hard Wire Input	Cart Prese	Hard Wire Input	N/A	Hard Wire Input	N/A	Hard Wire Input	N/A	Hard Wire Input	N/A	Hard Wire Input	N/A	Hard Wire Input	N/A
BIT	N/A	BIT	N/A	BIT	N/A	BIT	N/A	BIT	N/A	BIT	N/A	BIT	N/A	BIT	N/A
STEP ACTION		STEP ACTION		STEP ACTION		STEP ACTION		STEP ACTION		STEP ACTION		STEP ACTION		STEP ACTION	
Function	Reverse	Function	Forward	Function	Rotate	Function	Reverse	Function	Rotate	Function	Reverse	Function	Delay	Function	Forward
Speed	33	Speed	33	Speed	33	Speed	33	Speed	33	Speed	33	Speed	33	Speed	33
Navigation	DR	Navigation	DR	Navigation	DR	Navigation	DR	Navigation	DR	Navigation	DR	Navigation	DR	Navigation	DR
Direction	Center	Direction	Center	Direction	Center	Direction	Center	Direction	Center	Direction	Center	Direction	Center	Direction	Center
Size	104	Size	104	Size	90	Size	66	Size	-90	Size	186	Size	5	Size	186
Loss Of Guidance	N/A	Loss Of Guidance	N/A	Loss Of Guidance	N/A	Loss Of Guidance	N/A	Loss Of Guidance	N/A	Loss Of Guidance	N/A	Loss Of Guidance	N/A	Loss Of Guidance	N/A
Obstacle Avoidance	1	Obstacle Avoidance	1	Obstacle Avoidance	1	Obstacle Avoidance	1	Obstacle Avoidance	1	Obstacle Avoidance	1	Obstacle Avoidance	1	Obstacle Avoidance	1
Output	#6-Pin Up	Output	#6-Pin Up	Output	#6-Pin Up	Output	#6-Pin Up	Output	#6-Pin Up	Output	#6-Pin Up	Output	7-Pin Dow	Output	N/A
END OF STEP		END OF STEP		END OF STEP		END OF STEP		END OF STEP		END OF STEP		END OF STEP		END OF STEP	
END MODE	Distance	END MODE	Distance	END MODE	Distance	END MODE	Distance	END MODE	Distance	END MODE	Distance	END MODE	Time	END MODE	Distance
END ACTION	Merge	END ACTION	Merge	END ACTION	Merge	END ACTION	Merge	END ACTION	Merge	END ACTION	Merge	END ACTION	Merge	END ACTION	Merge
NEXT ROUTE	2	NEXT ROUTE	2	NEXT ROUTE	2	NEXT ROUTE	2	NEXT ROUTE	2	NEXT ROUTE	2	NEXT ROUTE	2	NEXT ROUTE	2
NEXT STEP	42	NEXT STEP	43	NEXT STEP	44	NEXT STEP	45	NEXT STEP	46	NEXT STEP	47	NEXT STEP	48	NEXT STEP	49

Route 2		Route 2		Route 2		Route 2		Route 2		Route 2		Route 2		Route 2	
Route	2	Route	2	Route	2	Route	2	Route	2	Route	2	Route	2	Route	2
Step	49	Step	50	Step	51	Step	52	Step	53	Step	54	Step	55	Step	56
STEP INITIATION		STEP INITIATION		STEP INITIATION		STEP INITIATION		STEP INITIATION		STEP INITIATION		STEP INITIATION		STEP INITIATION	
Go Mode	Auto	Go Mode	Auto	Go Mode	Auto	Go Mode	Auto	Go Mode	Auto	Go Mode	Auto	Go Mode	Auto	Go Mode	Auto
Radio Input	N/A	Radio Input	N/A	Radio Input	N/A	Radio Input	N/A	Radio Input	N/A	Radio Input	N/A	Radio Input	N/A	Radio Input	N/A
Hard Wire Input	N/A	Hard Wire Input	N/A	Hard Wire Input	N/A	Hard Wire Input	N/A	Hard Wire Input	Cart Prese	Hard Wire Input	N/a	Hard Wire Input	N/a	Hard Wire Input	N/a
BIT	N/A	BIT	N/A	BIT	N/A	BIT	N/A	BIT	N/A	BIT	N/A	BIT	N/A	BIT	N/A
STEP ACTION		STEP ACTION		STEP ACTION		STEP ACTION		STEP ACTION		STEP ACTION		STEP ACTION		STEP ACTION	
Function	Rotate	Function	Forward	Function	Rotate	Function	Reverse	Function	Forward	Function	Rotate	Function	Forward	Function	Rotate
Speed	33	Speed	33	Speed	33	Speed	33	Speed	33	Speed	33	Speed	33	Speed	33
Navigation	DR	Navigation	DR	Navigation	DR	Navigation	DR	Navigation	DR	Navigation	DR	Navigation	DR	Navigation	DR
Direction	Center	Direction	Center	Direction	Center	Direction	Center	Direction	Center	Direction	Center	Direction	Center	Direction	Center
Size	90	Size	66	Size	-135	Size	87	Size	87	Size	135	Size	1665	Size	-90
Loss Of Guidance	N/A	Loss Of Guidance	N/A	Loss Of Guidance	N/A	Loss Of Guidance	N/A	Loss Of Guidance	N/A	Loss Of Guidance	N/A	Loss Of Guidance	N/A	Loss Of Guidance	N/A
Obstacle Avoidance	1	Obstacle Avoidance	1	Obstacle Avoidance	1	Obstacle Avoidance	1	Obstacle Avoidance	1	Obstacle Avoidance	1	Obstacle Avoidance	1	Obstacle Avoidance	1
Output	N/A	Output	N/A	Output	N/A	Output	#6-Pin Up	Output	#6-Pin Up	Output	#6-Pin Up	Output	#6-Pin Up	Output	#6-Pin Up
END OF STEP		END OF STEP		END OF STEP		END OF STEP		END OF STEP		END OF STEP		END OF STEP		END OF STEP	
END MODE	Distance	END MODE	Distance	END MODE	Distance	END MODE	Distance	END MODE	Distance	END MODE	Distance	END MODE	Distance	END MODE	Distance
END ACTION	Merge	END ACTION	Merge	END ACTION	Merge	END ACTION	Merge	END ACTION	Merge	END ACTION	Merge	END ACTION	Merge	END ACTION	Merge
NEXT ROUTE	2	NEXT ROUTE	2	NEXT ROUTE	2	NEXT ROUTE	2	NEXT ROUTE	2	NEXT ROUTE	2	NEXT ROUTE	2	NEXT ROUTE	2
NEXT STEP	50	NEXT STEP	51	NEXT STEP	52	NEXT STEP	53	NEXT STEP	54	NEXT STEP	55	NEXT STEP	56	NEXT STEP	57

Route 2		Route 2		Route 2		Route 2		Route 2		Route 2		Route 2		Route 2	
Route	2	Route	2	Route	2	Route	2	Route	2	Route	2	Route	2	Route	2
Step	57	Step	58	Step	59	Step	60	Step	61	Step	62	Step	63	Step	64
STEP INITIATION		STEP INITIATION		STEP INITIATION		STEP INITIATION		STEP INITIATION		STEP INITIATION		STEP INITIATION		STEP INITIATION	
Go Mode	Auto	Go Mode	Auto	Go Mode	Auto	Go Mode	Auto	Go Mode	Auto	Go Mode	Auto	Go Mode	Auto	Go Mode	Auto
Radio Input	N/A	Radio Input	N/A	Radio Input	N/A	Radio Input	N/A	Radio Input	N/A	Radio Input	N/A	Radio Input	N/A	Radio Input	N/A
Hard Wire Input	N/a	Hard Wire Input	N/a	Hard Wire Input	N/a	Hard Wire Input	N/a	Hard Wire Input	N/a	Hard Wire Input	N/a	Hard Wire Input	N/a	Hard Wire Input	N/a
BIT	N/A	BIT	N/A	BIT	N/A	BIT	N/A	BIT	N/A	BIT	N/A	BIT	N/A	BIT	N/A
STEP ACTION		STEP ACTION		STEP ACTION		STEP ACTION		STEP ACTION		STEP ACTION		STEP ACTION		STEP ACTION	
Function	Forward	Function	Rotate	Function	Forward	Function	Rotate	Function	Forward	Function	Rotate	Function	Forward	Function	Rotate
Speed	33	Speed	33	Speed	33	Speed	33	Speed	33	Speed	33	Speed	33	Speed	33
Navigation	DR	Navigation	DR	Navigation	DR	Navigation	DR	Navigation	DR	Navigation	DR	Navigation	DR	Navigation	DR
Direction	Center	Direction	Center	Direction	Center	Direction	Center	Direction	Center	Direction	Center	Direction	Center	Direction	Center
Size	1164	Size	-90	Size	2284	Size	90	Size	962	Size	-90	Size	525	Size	90
Loss Of Guidance	N/A	Loss Of Guidance	N/A	Loss Of Guidance	N/A	Loss Of Guidance	N/A	Loss Of Guidance	N/A	Loss Of Guidance	N/A	Loss Of Guidance	N/A	Loss Of Guidance	N/A
Obstacle Avoidance	1	Obstacle Avoidance	1	Obstacle Avoidance	1	Obstacle Avoidance	1	Obstacle Avoidance	1	Obstacle Avoidance	1	Obstacle Avoidance	1	Obstacle Avoidance	1
Output	#6-Pin Up	Output	#6-Pin Up	Output	#6-Pin Up	Output	#6-Pin Up	Output	#6-Pin Up	Output	#6-Pin Up	Output	#6-Pin Up	Output	#6-Pin Up
END OF STEP		END OF STEP		END OF STEP		END OF STEP		END OF STEP		END OF STEP		END OF STEP		END OF STEP	
END MODE	Distance	END MODE	Distance	END MODE	Distance	END MODE	Distance	END MODE	Distance	END MODE	Distance	END MODE	Distance	END MODE	Distance
END ACTION	Merge	END ACTION	Merge	END ACTION	Merge	END ACTION	Merge	END ACTION	Merge	END ACTION	Merge	END ACTION	Merge	END ACTION	Merge
NEXT ROUTE	2	NEXT ROUTE	2	NEXT ROUTE	2	NEXT ROUTE	2	NEXT ROUTE	2	NEXT ROUTE	2	NEXT ROUTE	2	NEXT ROUTE	2
NEXT STEP	58	NEXT STEP	59	NEXT STEP	60	NEXT STEP	61	NEXT STEP	62	NEXT STEP	63	NEXT STEP	64	NEXT STEP	65

Route 2		Route 2		Route 2		Route 2		Route 2		Route 2		Route 2		Route 2	
Route	2	Route	2	Route	2	Route	2	Route	2	Route	2	Route	2	Route	2
Step	65	Step	66	Step	67	Step	68	Step	69	Step	70	Step	71	Step	72
STEP INITIATION		**STEP INITIATION**		**STEP INITIATION**		**STEP INITIATION**		**STEP INITIATION**		**STEP INITIATION**		**STEP INITIATION**		**STEP INITIATION**	
Go Mode	Auto	Go Mode	Auto	Go Mode	Auto	Go Mode	Auto	Go Mode	Auto	Go Mode	Auto	Go Mode	Auto	Go Mode	Auto
Radio Input	N/A	Radio Input	N/A	Radio Input	N/A	Radio Input	N/A	Radio Input	N/A	Radio Input	N/A	Radio Input	N/A	Radio Input	N/A
Hard Wire Input	N/a	Hard Wire Input	N/a	Hard Wire Input	N/a	Hard Wire Input	N/a	Hard Wire Input	N/a	Hard Wire Input	N/a	Hard Wire Input	N/a	Hard Wire Input	N/a
BIT	N/A	BIT	N/A	BIT	N/A	BIT	N/A	BIT	N/A	BIT	N/A	BIT	N/A	BIT	N/A
STEP ACTION		**STEP ACTION**		**STEP ACTION**		**STEP ACTION**		**STEP ACTION**		**STEP ACTION**		**STEP ACTION**		**STEP ACTION**	
Function	Forward	Function	Rotate	Function	Reverse	Function	Rotate	Function	Reverse	Function	Delay	Function	Forward	Function	Rotate
Speed	33	Speed	33	Speed	33	Speed	33	Speed	33	Speed	33	Speed	33	Speed	33
Navigation	DR	Navigation	DR	Navigation	DR	Navigation	DR	Navigation	DR	Navigation	DR	Navigation	DR	Navigation	DR
Direction	Center	Direction	Center	Direction	Center	Direction	Center	Direction	Center	Direction	Center	Direction	Center	Direction	Center
Size	248	Size	-90	Size	57	Size	-90	Size	84	Size	5	Size	84	Size	90
Loss Of Guidance	N/A	Loss Of Guidance	N/A	Loss Of Guidance	N/A	Loss Of Guidance	N/A	Loss Of Guidance	N/A	Loss Of Guidance	N/A	Loss Of Guidance	N/A	Loss Of Guidance	N/A
Obstacle Avoidance	1	Obstacle Avoidance	1	Obstacle Avoidance	1	Obstacle Avoidance	1	Obstacle Avoidance	1	Obstacle Avoidance	1	Obstacle Avoidance	1	Obstacle Avoidance	1
Output	#6-Pin Up	Output	#6-Pin Up	Output	#6-Pin Up	Output	#6-Pin Up	Output	#6-Pin Up	Output	7-Pin dow	Output		Output	
END OF STEP		**END OF STEP**		**END OF STEP**		**END OF STEP**		**END OF STEP**		**END OF STEP**		**END OF STEP**		**END OF STEP**	
END MODE	Distance	END MODE	Distance	END MODE	Distance	END MODE	Distance	END MODE	Distance	END MODE	Distance	END MODE	Distance	END MODE	Distance
END ACTION	Merge	END ACTION	Merge	END ACTION	Merge	END ACTION	Merge	END ACTION	Merge	END ACTION	Merge	END ACTION	Merge	END ACTION	Merge
NEXT ROUTE	2	NEXT ROUTE	2	NEXT ROUTE	2	NEXT ROUTE	2	NEXT ROUTE	2	NEXT ROUTE	2	NEXT ROUTE	2	NEXT ROUTE	2
NEXT STEP	66	NEXT STEP	67	NEXT STEP	68	NEXT STEP	69	NEXT STEP	70	NEXT STEP	71	NEXT STEP	72	NEXT STEP	73

Route 2		Route 2		Route 2		Route 2		Route 2		Route 0: 1	
Route	2	Route	2	Route	2	Route	2	Route	2	**STEP INITIATION**	
Step	73	Step	74	Step	75	Step	76	Step	77	**Go Mode**	nput Trigge
STEP INITIATION		**STEP INITIATION**		**STEP INITIATION**		**STEP INITIATION**		**STEP INITIATION**		**Radio Input**	idio Input 1
Go Mode	Auto	Go Mode	Auto	Go Mode	Auto	Go Mode	Auto	Go Mode	Auto	**Hard Wire Input**	N/a
Radio Input	N/A	Radio Input	N/A	Radio Input	N/A	Radio Input	N/A	Radio Input	N/A	**BIT**	BIT #1-#10
Hard Wire Input	N/a	Hard Wire Input	N/a	Hard Wire Input	N/a	Hard Wire Input	N/a	Hard Wire Input	N/a		
BIT	N/A	BIT	N/A	BIT	N/A	BIT	N/A	BIT	N/A		
STEP ACTION		**STEP ACTION**		**STEP ACTION**		**STEP ACTION**		**STEP ACTION**		**STEP ACTION**	
Function	Forward	Function	Rotate	Function	Reverse	Function	Rotate	Function	Reverse	**Function**	Auto
Speed	33	Speed	33	Speed	33	Speed	33	Speed	33	**Speed**	33
Navigation	DR	Navigation	DR	Navigation	DR	Navigation	DR	Navigation	DR	**Navigation**	DR
Direction	Center	Direction	Center	Direction	Center	Direction	Center	Direction	Center	**Direction**	Center
Size	57	Size	-90	Size	168	Size	90	Size	66	**Size**	66
Loss Of Guidance	N/A	Loss Of Guidance	N/A	Loss Of Guidance	N/A	Loss Of Guidance	N/A	Loss Of Guidance	N/A	**Loss Of Guidance**	N/A
Obstacle Avoidance	1	Obstacle Avoidance	1	Obstacle Avoidance	1	Obstacle Avoidance	1	Obstacle Avoidance	1	**Obstacle Avoidance**	1
Output		Output		Output		Output		Output		**Output**	N/a
END OF STEP		**END OF STEP**		**END OF STEP**		**END OF STEP**		**END OF STEP**		**END OF STEP**	
END MODE	Distance	END MODE	Distance	END MODE	Distance	END MODE	Distance	END MODE	Distance	**END MODE**	Distance
END ACTION	Merge	END ACTION	Merge	END ACTION	Merge	END ACTION	Merge	END ACTION	rge Bit #3	**END ACTION**	Merge
NEXT ROUTE	2	NEXT ROUTE	2	NEXT ROUTE	2	NEXT ROUTE	2	NEXT ROUTE	0	**NEXT ROUTE**	0
NEXT STEP	74	NEXT STEP	75	NEXT STEP	76	NEXT STEP	77	NEXT STEP	1	**NEXT STEP**	1

Tier 2 Route 3

Route 3: 1		Route 3: 2		Route 3: 3		Route 3: 4		Route 3: 5		Route 3: 6		Route 3: 7		Route 3: 8	
STEP INITIATION		**STEP INITIATION**		**STEP INITIATION**		**STEP INITIATION**		**STEP INITIATION**		**STEP INITIATION**		**STEP INITIATION**		**STEP INITIATION**	
Go Mode	put Trigger	**Go Mode**	Auto	**Go Mode**	Auto	**Go Mode**	Auto	**Go Mode**	Auto	**Go Mode**	Auto	**Go Mode**	Auto	**Go Mode**	Auto
Radio Input	dio Input 1	**Radio Input**	dio Input 1	**Radio Input**	dio Input 1	**Radio Input**	dio Input 1	**Radio Input**	dio Input 1	**Radio Input**	dio Input 1	**Radio Input**	dio Input 1	**Radio Input**	dio Input 1
Hard Wire Input	N/A	**Hard Wire Input**	N/A	**Hard Wire Input**	N/A	**Hard Wire Input**	N/A	**Hard Wire Input**	N/A	**Hard Wire Input**	N/A	**Hard Wire Input**	N/A	**Hard Wire Input**	N/A
BIT	Bit #1 off	**BIT**	N/A	**BIT**	N/A	**BIT**	N/A	**BIT**	N/A	**BIT**	N/A	**BIT**	N/A	**BIT**	N/A
	Bit #5 On														
Home Position RFID	Bit #6 On														
STEP ACTION		**STEP ACTION**		**STEP ACTION**		**STEP ACTION**		**STEP ACTION**		**STEP ACTION**		**STEP ACTION**		**STEP ACTION**	
Function	Dispatch	**Function**	Forward	**Function**	Rotate	**Function**	Forward	**Function**	Rotate	**Function**	Forward	**Function**	Rotate	**Function**	Forward
Speed	N/A	**Speed**	33	**Speed**	33	**Speed**	33	**Speed**	33	**Speed**	33	**Speed**	33	**Speed**	33
Navigation	N/A	**Navigation**	DR	**Navigation**	DR	**Navigation**	DR	**Navigation**	DR	**Navigation**	DR	**Navigation**	DR	**Navigation**	DR
Direction	N/A	**Direction**	Center	**Direction**	Center	**Direction**	Center	**Direction**	Center	**Direction**	Center	**Direction**	Center	**Direction**	Center
Size	N/A	**Size**	66	**Size**	-90	**Size**	417	**Size**	-90	**Size**	525	**Size**	90	**Size**	962
Loss Of Guidance	N/A	**Loss Of Guidance**	N/A	**Loss Of Guidance**	N/A	**Loss Of Guidance**	N/A	**Loss Of Guidance**	N/A	**Loss Of Guidance**	N/A	**Loss Of Guidance**	N/A	**Loss Of Guidance**	N/A
Obstacle Avoidance	N/A	**Obstacle Avoidance**	1	**Obstacle Avoidance**	1	**Obstacle Avoidance**	1	**Obstacle Avoidance**	1	**Obstacle Avoidance**	1	**Obstacle Avoidance**	1	**Obstacle Avoidance**	1
Output	N/A	**Output**	N/A	**Output**	N/A	**Output**	N/A	**Output**	N/A	**Output**	N/A	**Output**	N/A	**Output**	N/A
END OF STEP		**END OF STEP**		**END OF STEP**		**END OF STEP**		**END OF STEP**		**END OF STEP**		**END OF STEP**		**END OF STEP**	
END MODE	N/A	**END MODE**	Distance	**END MODE**	Distance	**END MODE**	Distance	**END MODE**	Distance	**END MODE**	Distance	**END MODE**	Distance	**END MODE**	Distance
END ACTION	ge Bit #5, #6	**END ACTION**	Merge	**END ACTION**	Merge	**END ACTION**	Merge	**END ACTION**	Merge	**END ACTION**	Merge	**END ACTION**	Merge	**END ACTION**	Merge
NEXT ROUTE	3	**NEXT ROUTE**	3	**NEXT ROUTE**	3	**NEXT ROUTE**	3	**NEXT ROUTE**	3	**NEXT ROUTE**	3	**NEXT ROUTE**	3	**NEXT ROUTE**	3
NEXT STEP	**2**	**NEXT STEP**	**3**	**NEXT STEP**	**4**	**NEXT STEP**	**5**	**NEXT STEP**	**6**	**NEXT STEP**	**7**	**NEXT STEP**	**8**	**NEXT STEP**	**9**

Route 3: 9		Route 3: 10		Route 3: 11		Route 3: 12		Route 3: 13		Route 3: 14		Route 3: 15		Route 3: 16	
STEP INITIATION		**STEP INITIATION**		**STEP INITIATION**		**STEP INITIATION**		**STEP INITIATION**		**STEP INITIATION**		**STEP INITIATION**		**STEP INITIATION**	
Go Mode	Auto	**Go Mode**	Auto	**Go Mode**	Auto	**Go Mode**	Auto	**Go Mode**	Auto	**Go Mode**	Auto	**Go Mode**	Auto	**Go Mode**	Auto
Radio Input	dio Input 1	**Radio Input**	dio Input 1	**Radio Input**	dio Input 1	**Radio Input**	dio Input 1	**Radio Input**	dio Input 1	**Radio Input**	dio Input 1	**Radio Input**	dio Input 1	**Radio Input**	dio Input 1
Hard Wire Input	N/A	**Hard Wire Input**	N/A	**Hard Wire Input**	N/A	**Hard Wire Input**	N/A	**Hard Wire Input**	N/A	**Hard Wire Input**	N/A	**Hard Wire Input**	N/A	**Hard Wire Input**	N/A
BIT	N/A	**BIT**	N/A	**BIT**	N/A	**BIT**	N/A	**BIT**	N/A	**BIT**	N/A	**BIT**	N/A	**BIT**	N/A
STEP ACTION		**STEP ACTION**		**STEP ACTION**		**STEP ACTION**		**STEP ACTION**		**STEP ACTION**		**STEP ACTION**		**STEP ACTION**	
Function	Rotate	**Function**	Forward	**Function**	Rotate	**Function**	Forward	**Function**	Rotate	**Function**	Forward	**Function**	Rotate	**Function**	Forward
Speed	33	**Speed**	33	**Speed**	33	**Speed**	33	**Speed**	33	**Speed**	33	**Speed**	33	**Speed**	33
Navigation	DR	**Navigation**	DR	**Navigation**	DR	**Navigation**	DR	**Navigation**	DR	**Navigation**	DR	**Navigation**	DR	**Navigation**	DR
Direction	Center	**Direction**	Center	**Direction**	Center	**Direction**	Center	**Direction**	Center	**Direction**	Center	**Direction**	Center	**Direction**	Center
Size	-90	**Size**	1915	**Size**	-90	**Size**	1007	**Size**	90	**Size**	657	**Size**	90	**Size**	403
Loss Of Guidance	N/A	**Loss Of Guidance**	N/A	**Loss Of Guidance**	N/A	**Loss Of Guidance**	N/A	**Loss Of Guidance**	N/A	**Loss Of Guidance**	N/A	**Loss Of Guidance**	N/A	**Loss Of Guidance**	N/A
Obstacle Avoidance	1	**Obstacle Avoidance**	1	**Obstacle Avoidance**	1	**Obstacle Avoidance**	1	**Obstacle Avoidance**	1	**Obstacle Avoidance**	1	**Obstacle Avoidance**	1	**Obstacle Avoidance**	1
Output	N/A	**Output**	N/A	**Output**	N/A	**Output**	N/A	**Output**	N/A	**Output**	N/A	**Output**	N/A	**Output**	N/A
END OF STEP		**END OF STEP**		**END OF STEP**		**END OF STEP**		**END OF STEP**		**END OF STEP**		**END OF STEP**		**END OF STEP**	
END MODE	Distance	**END MODE**	Distance	**END MODE**	Distance	**END MODE**	Distance	**END MODE**	Distance	**END MODE**	Distance	**END MODE**	Distance	**END MODE**	Distance
END ACTION	Merge	**END ACTION**	Merge	**END ACTION**	Merge	**END ACTION**	Merge	**END ACTION**	Merge	**END ACTION**	Merge	**END ACTION**	Merge	**END ACTION**	Merge
NEXT ROUTE	3	**NEXT ROUTE**	3	**NEXT ROUTE**	3	**NEXT ROUTE**	3	**NEXT ROUTE**	3	**NEXT ROUTE**	3	**NEXT ROUTE**	3	**NEXT ROUTE**	3
NEXT STEP	**10**	**NEXT STEP**	**11**	**NEXT STEP**	**12**	**NEXT STEP**	**13**	**NEXT STEP**	**14**	**NEXT STEP**	**15**	**NEXT STEP**	**16**	**NEXT STEP**	**17**

Route 3: 17		Route 3: 18		Route 3: 19		Route 3: 20		Route 3: 21		Route 3: 22		Route 3: 23		Route 3: 24	
STEP INITIATION		**STEP INITIATION**		**STEP INITIATION**		**STEP INITIATION**		**STEP INITIATION**		**STEP INITIATION**		**STEP INITIATION**		**STEP INITIATION**	
Go Mode	Auto	**Go Mode**	Auto	**Go Mode**	Auto	**Go Mode**	Auto	**Go Mode**	Auto	**Go Mode**	Auto	**Go Mode**	Auto	**Go Mode**	Auto
Radio Input	dio Input 1	**Radio Input**	dio Input 1	**Radio Input**	dio Input 1	**Radio Input**	dio Input 1	**Radio Input**	dio Input 1	**Radio Input**	dio Input 1	**Radio Input**	dio Input 1	**Radio Input**	dio Input 1
Hard Wire Input	N/A	**Hard Wire Input**	N/A	**Hard Wire Input**	N/A	**Hard Wire Input**	N/A	**Hard Wire Input**	cart Prese	**Hard Wire Input**	N/a	**Hard Wire Input**	N/a	**Hard Wire Input**	N/a
BIT	N/A	**BIT**	N/A	**BIT**	N/A	**BIT**	N/A	**BIT**	N/A	**BIT**	N/A	**BIT**	N/A	**BIT**	N/A
STEP ACTION		**STEP ACTION**		**STEP ACTION**		**STEP ACTION**		**STEP ACTION**		**STEP ACTION**		**STEP ACTION**		**STEP ACTION**	
Function	Rotate	**Function**	Forward	**Function**	Rotate	**Function**	Reverse	**Function**	Forward	**Function**	Rotate	**Function**	Forward	**Function**	Rotate
Speed	33	**Speed**	33	**Speed**	33	**Speed**	33	**Speed**	33	**Speed**	33	**Speed**	33	**Speed**	33
Navigation	DR	**Navigation**	DR	**Navigation**	DR	**Navigation**	DR	**Navigation**	DR	**Navigation**	DR	**Navigation**	DR	**Navigation**	DR
Direction	Center	**Direction**	Center	**Direction**	Center	**Direction**	Center	**Direction**	Center	**Direction**	Center	**Direction**	Center	**Direction**	Center
Size	-90	**Size**	54	**Size**	-90	**Size**	79	**Size**	79	**Size**	-90	**Size**	54	**Size**	90
Loss Of Guidance	N/A	**Loss Of Guidance**	N/A	**Loss Of Guidance**	N/A	**Loss Of Guidance**	N/A	**Loss Of Guidance**	N/A	**Loss Of Guidance**	N/A	**Loss Of Guidance**	N/A	**Loss Of Guidance**	N/A
Obstacle Avoidance	1	**Obstacle Avoidance**	1	**Obstacle Avoidance**	1	**Obstacle Avoidance**	1	**Obstacle Avoidance**	1	**Obstacle Avoidance**	1	**Obstacle Avoidance**	1	**Obstacle Avoidance**	1
Output	N/A	**Output**	N/A	**Output**	N/A	**Output**	#6 pin up	**Output**	N/a	**Output**	N/a	**Output**	N/a	**Output**	N/a
END OF STEP		**END OF STEP**		**END OF STEP**		**END OF STEP**		**END OF STEP**		**END OF STEP**		**END OF STEP**		**END OF STEP**	
END MODE	Distance	**END MODE**	Distance	**END MODE**	Distance	**END MODE**	Distance	**END MODE**	Distance	**END MODE**	Distance	**END MODE**	Distance	**END MODE**	Distance
END ACTION	Merge	**END ACTION**	Merge	**END ACTION**	Merge	**END ACTION**	Merge	**END ACTION**	Merge	**END ACTION**	Merge	**END ACTION**	Merge	**END ACTION**	Merge
NEXT ROUTE	3	**NEXT ROUTE**	3	**NEXT ROUTE**	3	**NEXT ROUTE**	3	**NEXT ROUTE**	3	**NEXT ROUTE**	3	**NEXT ROUTE**	3	**NEXT ROUTE**	3
NEXT STEP	**18**	**NEXT STEP**	**19**	**NEXT STEP**	**20**	**NEXT STEP**	**21**	**NEXT STEP**	**22**	**NEXT STEP**	**23**	**NEXT STEP**	**24**	**NEXT STEP**	**25**

Route 3: 25		Route 3: 26		Route 3: 27		Route 3: 28		Route 3: 29		Route 3: 30		Route 3: 31		Route 3: 32	
STEP INITIATION		**STEP INITIATION**		**STEP INITIATION**		**STEP INITIATION**		**STEP INITIATION**		**STEP INITIATION**		**STEP INITIATION**		**STEP INITIATION**	
Go Mode	Auto	**Go Mode**	Auto	**Go Mode**	Auto	**Go Mode**	Auto	**Go Mode**	Auto	**Go Mode**	Auto	**Go Mode**	Auto	**Go Mode**	Auto
Radio Input	dio Input 1	**Radio Input**	dio Input 1	**Radio Input**	dio Input 1	**Radio Input**	dio Input 1	**Radio Input**	dio Input 1	**Radio Input**	dio Input 1	**Radio Input**	dio Input 1	**Radio Input**	dio Input 1
Hard Wire Input	N/a	**Hard Wire Input**	N/a	**Hard Wire Input**	N/a	**Hard Wire Input**	N/a	**Hard Wire Input**	N/a	**Hard Wire Input**	N/a	**Hard Wire Input**	N/a	**Hard Wire Input**	N/a
BIT	N/A	**BIT**	N/A	**BIT**	N/A	**BIT**	N/A	**BIT**	N/A	**BIT**	N/A	**BIT**	N/A	**BIT**	N/A
STEP ACTION		**STEP ACTION**		**STEP ACTION**		**STEP ACTION**		**STEP ACTION**		**STEP ACTION**		**STEP ACTION**		**STEP ACTION**	
Function	Forward	**Function**	Rotate	**Function**	Forward	**Function**	Rotate	**Function**	Forward	**Function**	Rotate	**Function**	Forward	**Function**	Rotate
Speed	33	**Speed**	33	**Speed**	33	**Speed**	33	**Speed**	33	**Speed**	33	**Speed**	33	**Speed**	33
Navigation	DR	**Navigation**	DR	**Navigation**	DR	**Navigation**	DR	**Navigation**	DR	**Navigation**	DR	**Navigation**	DR	**Navigation**	DR
Direction	Center	**Direction**	Center	**Direction**	Center	**Direction**	Center	**Direction**	Center	**Direction**	Center	**Direction**	Center	**Direction**	Center
Size	403	**Size**	-90	**Size**	657	**Size**	-90	**Size**	1007	**Size**	-90	**Size**	369	**Size**	90
Loss Of Guidance	N/A	**Loss Of Guidance**	N/A	**Loss Of Guidance**	N/A	**Loss Of Guidance**	N/A	**Loss Of Guidance**	N/A	**Loss Of Guidance**	N/A	**Loss Of Guidance**	N/A	**Loss Of Guidance**	N/A
Obstacle Avoidance	1	**Obstacle Avoidance**	1	**Obstacle Avoidance**	1	**Obstacle Avoidance**	1	**Obstacle Avoidance**	1	**Obstacle Avoidance**	1	**Obstacle Avoidance**	1	**Obstacle Avoidance**	1
Output	N/a	**Output**	N/a	**Output**	N/a	**Output**	N/a	**Output**	N/a	**Output**	N/a	**Output**	N/a	**Output**	N/a
END OF STEP		**END OF STEP**		**END OF STEP**		**END OF STEP**		**END OF STEP**		**END OF STEP**		**END OF STEP**		**END OF STEP**	
END MODE	Distance	**END MODE**	Distance	**END MODE**	Distance	**END MODE**	Distance	**END MODE**	Distance	**END MODE**	Distance	**END MODE**	Distance	**END MODE**	Distance
END ACTION	Merge	**END ACTION**	Merge	**END ACTION**	Merge	**END ACTION**	Merge	**END ACTION**	Merge	**END ACTION**	Merge	**END ACTION**	Merge	**END ACTION**	Merge
NEXT ROUTE	3	**NEXT ROUTE**	3	**NEXT ROUTE**	3	**NEXT ROUTE**	3	**NEXT ROUTE**	3	**NEXT ROUTE**	3	**NEXT ROUTE**	3	**NEXT ROUTE**	3
NEXT STEP	**26**	**NEXT STEP**	**27**	**NEXT STEP**	**28**	**NEXT STEP**	**29**	**NEXT STEP**	**30**	**NEXT STEP**	**31**	**NEXT STEP**	**32**	**NEXT STEP**	**33**

Route 3: 33		Route 3: 34		Route 3: 35		Route 3: 36		Route 3: 37		Route 3: 38		Route 3: 39		Route 3: 40	
STEP INITIATION		STEP INITIATION		STEP INITIATION		STEP INITIATION		STEP INITIATION		STEP INITIATION		STEP INITIATION		STEP INITIATION	
Go Mode	Auto	Go Mode	Auto	Go Mode	Auto	Go Mode	Auto	Go Mode	Auto	Go Mode	Auto	Go Mode	Auto	Go Mode	Auto
Radio Input	dio Input 1	Radio Input	dio Input 1	Radio Input	dio Input 1	Radio Input	dio Input 1	Radio Input	dio Input 1	Radio Input	dio Input 1	Radio Input	dio Input 1	Radio Input	dio Input 1
Hard Wire Input	N/A	Hard Wire Input	N/A	Hard Wire Input	N/A	Hard Wire Input	N/A	Hard Wire Input	N/A	Hard Wire Input	N/A	Hard Wire Input	N/A	Hard Wire Input	N/A
BIT	N/A	BIT	N/A	BIT	N/A	BIT	N/A	BIT	N/A	BIT	N/A	BIT	N/A	BIT	N/A
STEP ACTION		STEP ACTION		STEP ACTION		STEP ACTION		STEP ACTION		STEP ACTION		STEP ACTION		STEP ACTION	
Function	Forward	Function	Rotate	Function	Forward	Function	Rotate	Function	Forward	Function	Rotate	Function	Reverse	Function	Delay
Speed	33	Speed	33	Speed	33	Speed	33	Speed	33	Speed	33	Speed	33	Speed	33
Navigation	DR	Navigation	DR	Navigation	DR	Navigation	DR	Navigation	DR	Navigation	DR	Navigation	DR	Navigation	DR
Direction	Center	Direction	Center	Direction	Center	Direction	Center	Direction	Center	Direction	Center	Direction	Center	Direction	Center
Size	1164	Size	-90	Size	314	Size	90	Size	1883	Size	-90	Size	97	Size	5
Loss Of Guidance	N/A	Loss Of Guidance	N/A	Loss Of Guidance	N/A	Loss Of Guidance	N/A	Loss Of Guidance	N/A	Loss Of Guidance	N/A	Loss Of Guidance	N/A	Loss Of Guidance	N/A
Obstacle Avoidance	1	Obstacle Avoidance	1	Obstacle Avoidance	1	Obstacle Avoidance	1	Obstacle Avoidance	1	Obstacle Avoidance	1	Obstacle Avoidance	1	Obstacle Avoidance	1
Output	N/A	Output	N/A	Output	N/A	Output	N/A	Output	N/A	Output	N/A	Output	N/A	Output	#7 Pin Drop
END OF STEP		END OF STEP		END OF STEP		END OF STEP		END OF STEP		END OF STEP		END OF STEP		END OF STEP	
END MODE	Distance	END MODE	Distance	END MODE	Distance	END MODE	Distance	END MODE	Distance	END MODE	Distance	END MODE	Distance	END MODE	Distance
END ACTION	Merge	END ACTION	Merge	END ACTION	Merge	END ACTION	Merge	END ACTION	Merge	END ACTION	Merge	END ACTION	Merge	END ACTION	Merge
NEXT ROUTE	3	NEXT ROUTE	3	NEXT ROUTE	3	NEXT ROUTE	3	NEXT ROUTE	3	NEXT ROUTE	3	NEXT ROUTE	3	NEXT ROUTE	3
NEXT STEP	34	NEXT STEP	35	NEXT STEP	36	NEXT STEP	37	NEXT STEP	38	NEXT STEP	39	NEXT STEP	40	NEXT STEP	41

Route 3: 41		Route 3: 42		Route 3: 43		Route 3: 44		Route 3: 45		Route 3: 46		Route 3: 47		Route 3: 48	
STEP INITIATION		STEP INITIATION		STEP INITIATION		STEP INITIATION		STEP INITIATION		STEP INITIATION		STEP INITIATION		STEP INITIATION	
Go Mode	Auto	Go Mode	Auto	Go Mode	Auto	Go Mode	Auto	Go Mode	Auto	Go Mode	Auto	Go Mode	Auto	Go Mode	Auto
Radio Input	dio Input 1	Radio Input	dio Input 1	Radio Input	dio Input 1	Radio Input	dio Input 1	Radio Input	dio Input 1	Radio Input	dio Input 1	Radio Input	dio Input 1	Radio Input	dio Input 1
Hard Wire Input	N/A	Hard Wire Input	N/A	Hard Wire Input	N/A	Hard Wire Input	N/A	Hard Wire Input	N/A	Hard Wire Input	N/A	Hard Wire Input	N/A	Hard Wire Input	N/A
BIT	N/A	BIT	N/A	BIT	N/A	BIT	N/A	BIT	N/A	BIT	N/A	BIT	N/A	BIT	N/A
STEP ACTION		STEP ACTION		STEP ACTION		STEP ACTION		STEP ACTION		STEP ACTION		STEP ACTION		STEP ACTION	
Function	Forward	Function	Rotate	Function	Forward	Function	Rotate	Function	Forward	Function	Rotate	Function	Forward	Function	Rotate
Speed	33	Speed	33	Speed	33	Speed	33	Speed	33	Speed	33	Speed	33	Speed	33
Navigation	DR	Navigation	DR	Navigation	DR	Navigation	DR	Navigation	DR	Navigation	DR	Navigation	DR	Navigation	DR
Direction	Center	Direction	Center	Direction	Center	Direction	Center	Direction	Center	Direction	Center	Direction	Center	Direction	Center
Size	97	Size	-90	Size	1883	Size	-90	Size	314	Size	90	Size	1164	Size	-90
Loss Of Guidance	N/A	Loss Of Guidance	N/A	Loss Of Guidance	N/A	Loss Of Guidance	N/A	Loss Of Guidance	N/A	Loss Of Guidance	N/A	Loss Of Guidance	N/A	Loss Of Guidance	N/A
Obstacle Avoidance	1	Obstacle Avoidance	1	Obstacle Avoidance	1	Obstacle Avoidance	1	Obstacle Avoidance	1	Obstacle Avoidance	1	Obstacle Avoidance	1	Obstacle Avoidance	1
Output	N/A	Output	N/A	Output	N/A	Output	N/A	Output	N/A	Output	N/A	Output	N/A	Output	N/A
END OF STEP		END OF STEP		END OF STEP		END OF STEP		END OF STEP		END OF STEP		END OF STEP		END OF STEP	
END MODE	Distance	END MODE	Distance	END MODE	Distance	END MODE	Distance	END MODE	Distance	END MODE	Distance	END MODE	Distance	END MODE	Distance
END ACTION	Merge	END ACTION	Merge	END ACTION	Merge	END ACTION	Merge	END ACTION	Merge	END ACTION	Merge	END ACTION	Merge	END ACTION	Merge
NEXT ROUTE	3	NEXT ROUTE	3	NEXT ROUTE	3	NEXT ROUTE	3	NEXT ROUTE	3	NEXT ROUTE	3	NEXT ROUTE	3	NEXT ROUTE	3
NEXT STEP	42	NEXT STEP	43	NEXT STEP	44	NEXT STEP	45	NEXT STEP	46	NEXT STEP	47	NEXT STEP	48	NEXT STEP	49

Route 3: 49		Route 3: 50		Route 3: 51		Route 3: 52		Route 3: 53		Route 3: 54		Route 3: 55		Route 3: 56	
STEP INITIATION		STEP INITIATION		STEP INITIATION		STEP INITIATION		STEP INITIATION		STEP INITIATION		STEP INITIATION		STEP INITIATION	
Go Mode	Auto	Go Mode	Auto	Go Mode	Auto	Go Mode	Auto	Go Mode	Auto	Go Mode	Auto	Go Mode	Auto	Go Mode	Auto
Radio Input	dio Input 1	Radio Input	dio Input 1	Radio Input	dio Input 1	Radio Input	dio Input 1	Radio Input	dio Input 1	Radio Input	dio Input 1	Radio Input	dio Input 1	Radio Input	dio Input 1
Hard Wire Input	N/A	Hard Wire Input	N/A	Hard Wire Input	N/A	Hard Wire Input	N/A	Hard Wire Input	N/A	Hard Wire Input	N/A	Hard Wire Input	N/A	Hard Wire Input	N/A
BIT	N/A	BIT	N/A	BIT	N/A	BIT	N/A	BIT	N/A	BIT	N/A	BIT	N/A	BIT	N/A
STEP ACTION		STEP ACTION		STEP ACTION		STEP ACTION		STEP ACTION		STEP ACTION		STEP ACTION		STEP ACTION	
Function	Forward	Function	Rotate	Function	Forward	Function	Forward	Function	Rotate	Function	Forward	Function	Rotate	Function	Forward
Speed	33	Speed	33	Speed	33	Speed	33	Speed	33	Speed	33	Speed	33	Speed	33
Navigation	DR	Navigation	DR	Navigation	DR	Navigation	DR	Navigation	DR	Navigation	DR	Navigation	DR	Navigation	DR
Direction	Center	Direction	Center	Direction	Center	Direction	Center	Direction	Center	Direction	Center	Direction	Center	Direction	Center
Size	2284	Size	90	Size	962	Size	962	Size	-90	Size	525	Size	90	Size	417
Loss Of Guidance	N/A	Loss Of Guidance	N/A	Loss Of Guidance	N/A	Loss Of Guidance	N/A	Loss Of Guidance	N/A	Loss Of Guidance	N/A	Loss Of Guidance	N/A	Loss Of Guidance	N/A
Obstacle Avoidance	1	Obstacle Avoidance	1	Obstacle Avoidance	1	Obstacle Avoidance	1	Obstacle Avoidance	1	Obstacle Avoidance	1	Obstacle Avoidance	1	Obstacle Avoidance	1
Output	N/A	Output	N/A	Output	N/A	Output	N/A	Output	N/A	Output	N/A	Output	N/A	Output	N/A
END OF STEP		END OF STEP		END OF STEP		END OF STEP		END OF STEP		END OF STEP		END OF STEP		END OF STEP	
END MODE	Distance	END MODE	Distance	END MODE	Distance	END MODE	Distance	END MODE	Distance	END MODE	Distance	END MODE	Distance	END MODE	Distance
END ACTION	Merge	END ACTION	Merge	END ACTION	Merge	END ACTION	Merge	END ACTION	Merge	END ACTION	Merge	END ACTION	Merge	END ACTION	Merge
NEXT ROUTE	3	NEXT ROUTE	3	NEXT ROUTE	3	NEXT ROUTE	3	NEXT ROUTE	3	NEXT ROUTE	3	NEXT ROUTE	3	NEXT ROUTE	3
NEXT STEP	50	NEXT STEP	51	NEXT STEP	52	NEXT STEP	53	NEXT STEP	54	NEXT STEP	55	NEXT STEP	56	NEXT STEP	57

Route 3: 57		Route 3: 58		Route 0: 1	
STEP INITIATION		STEP INITIATION		STEP INITIATION	
Go Mode	Auto	Go Mode	Auto	Go Mode	nput Trigge
Radio Input	dio Input 1	Radio Input	dio Input 1	Radio Input	dio Input 1
Hard Wire Input	N/A	Hard Wire Input	N/A	Hard Wire Input	N/A
BIT	N/A	BIT	N/A	BIT	BIT #1-#10
STEP ACTION		STEP ACTION		STEP ACTION	
Function	Rotate	Function	Reverse	Function	Auto
Speed	33	Speed	33	Speed	33
Navigation	DR	Navigation	DR	Navigation	DR
Direction	Center	Direction	Center	Direction	Center
Size	-90	Size	66	Size	66
Loss Of Guidance	N/A	Loss Of Guidance	N/A	Loss Of Guidance	N/A
Obstacle Avoidance	1	Obstacle Avoidance	1	Obstacle Avoidance	1
Output	N/A	Output	N/A	Output	N/A
END OF STEP		END OF STEP		END OF STEP	
END MODE	Distance	END MODE	Distance	END MODE	Distance
END ACTION	Merge	END ACTION	Merge	END ACTION	Merge
NEXT ROUTE	3	NEXT ROUTE	0	NEXT ROUTE	0
NEXT STEP	58	NEXT STEP	1	NEXT STEP	1

Tier 2 Route 4

Route 4: 1		Route 4: 2		Route 4: 3		Route 4: 4		Route 4: 5		Route 4: 6		Route 4: 7		Route 4: 8	
STEP INITIATION		**STEP INITIATION**		**STEP INITIATION**		**STEP INITIATION**		**STEP INITIATION**		**STEP INITIATION**		**STEP INITIATION**		**STEP INITIATION**	
Go Mode	put Trigger	**Go Mode**	Auto	**Go Mode**	Auto	**Go Mode**	Auto	**Go Mode**	Auto	**Go Mode**	Auto	**Go Mode**	Auto	**Go Mode**	Auto
Radio Input	dio Input 1	**Radio Input**	dio Input 1	**Radio Input**	dio Input 1	**Radio Input**	dio Input 1	**Radio Input**	dio Input 1	**Radio Input**	dio Input 1	**Radio Input**	dio Input 1	**Radio Input**	dio Input 1
Hard Wire Input	N/A	**Hard Wire Input**	N/A	**Hard Wire Input**	N/A	**Hard Wire Input**	N/A	**Hard Wire Input**	N/A	**Hard Wire Input**	N/A	**Hard Wire Input**	N/A	**Hard Wire Input**	N/A
BIT	Bit #1 off	**BIT**	N/A	**BIT**	N/A	**BIT**	N/A	**BIT**	N/A	**BIT**	N/A	**BIT**	N/A	**BIT**	N/A
	Bit #7 On														
Home Position RFID	Bit #9 On														
STEP ACTION		**STEP ACTION**		**STEP ACTION**		**STEP ACTION**		**STEP ACTION**		**STEP ACTION**		**STEP ACTION**		**STEP ACTION**	
Function	Dispatch	**Function**	Forward	**Function**	Rotate	**Function**	Forward	**Function**	Rotate	**Function**	Forward	**Function**	Rotate	**Function**	Forward
Speed	N/A	**Speed**	33	**Speed**	33	**Speed**	33	**Speed**	33	**Speed**	33	**Speed**	33	**Speed**	33
Navigation	N/A	**Navigation**	DR	**Navigation**	DR	**Navigation**	DR	**Navigation**	DR	**Navigation**	DR	**Navigation**	DR	**Navigation**	DR
Direction	N/A	**Direction**	Center	**Direction**	Center	**Direction**	Center	**Direction**	Center	**Direction**	Center	**Direction**	Center	**Direction**	Center
Size	N/A	**Size**	66	**Size**	-90	**Size**	417	**Size**	-90	**Size**	525	**Size**	90	**Size**	962
Loss Of Guidance	N/A	**Loss Of Guidance**	N/A	**Loss Of Guidance**	N/A	**Loss Of Guidance**	N/A	**Loss Of Guidance**	N/A	**Loss Of Guidance**	N/A	**Loss Of Guidance**	N/A	**Loss Of Guidance**	N/A
Obstacle Avoidance	N/A	**Obstacle Avoidance**	1	**Obstacle Avoidance**	1	**Obstacle Avoidance**	1	**Obstacle Avoidance**	1	**Obstacle Avoidance**	1	**Obstacle Avoidance**	1	**Obstacle Avoidance**	1
Output	N/A	**Output**	N/A	**Output**	N/A	**Output**	N/A	**Output**	N/A	**Output**	N/A	**Output**	N/A	**Output**	N/A
END OF STEP		**END OF STEP**		**END OF STEP**		**END OF STEP**		**END OF STEP**		**END OF STEP**		**END OF STEP**		**END OF STEP**	
END MODE	N/A	**END MODE**	Distance	**END MODE**	Distance	**END MODE**	Distance	**END MODE**	Distance	**END MODE**	Distance	**END MODE**	Distance	**END MODE**	Distance
END ACTION	e Bit #7, #9	**END ACTION**	Merge	**END ACTION**	Merge	**END ACTION**	Merge	**END ACTION**	Merge	**END ACTION**	Merge	**END ACTION**	Merge	**END ACTION**	Merge
NEXT ROUTE	4	**NEXT ROUTE**	4	**NEXT ROUTE**	4	**NEXT ROUTE**	4	**NEXT ROUTE**	4	**NEXT ROUTE**	4	**NEXT ROUTE**	4	**NEXT ROUTE**	4
NEXT STEP	**2**	**NEXT STEP**	**3**	**NEXT STEP**	**4**	**NEXT STEP**	**5**	**NEXT STEP**	**6**	**NEXT STEP**	**7**	**NEXT STEP**	**8**	**NEXT STEP**	**9**

Route 4: 9		Route 4: 10		Route 4: 11		Route 4: 12		Route 4: 13		Route 4: 14		Route 4: 15		Route 4: 16	
STEP INITIATION		**STEP INITIATION**		**STEP INITIATION**		**STEP INITIATION**		**STEP INITIATION**		**STEP INITIATION**		**STEP INITIATION**		**STEP INITIATION**	
Go Mode	Auto	**Go Mode**	Auto	**Go Mode**	Auto	**Go Mode**	Auto	**Go Mode**	Auto	**Go Mode**	Auto	**Go Mode**	Auto	**Go Mode**	Auto
Radio Input	dio Input 1	**Radio Input**	dio Input 1	**Radio Input**	dio Input 1	**Radio Input**	dio Input 1	**Radio Input**	dio Input 1	**Radio Input**	dio Input 1	**Radio Input**	dio Input 1	**Radio Input**	dio Input 1
Hard Wire Input	N/A	**Hard Wire Input**	N/A	**Hard Wire Input**	N/A	**Hard Wire Input**	N/A	**Hard Wire Input**	N/A	**Hard Wire Input**	N/A	**Hard Wire Input**	N/A	**Hard Wire Input**	N/A
BIT	N/A	**BIT**	N/A	**BIT**	N/A	**BIT**	N/A	**BIT**	N/A	**BIT**	N/A	**BIT**	N/A	**BIT**	N/A
STEP ACTION		**STEP ACTION**		**STEP ACTION**		**STEP ACTION**		**STEP ACTION**		**STEP ACTION**		**STEP ACTION**		**STEP ACTION**	
Function	Rotate	**Function**	Forward	**Function**	Rotate	**Function**	Forward	**Function**	Rotate	**Function**	Forward	**Function**	Rotate	**Function**	Forward
Speed	33	**Speed**	33	**Speed**	33	**Speed**	33	**Speed**	33	**Speed**	33	**Speed**	33	**Speed**	33
Navigation	DR	**Navigation**	DR	**Navigation**	DR	**Navigation**	DR	**Navigation**	DR	**Navigation**	DR	**Navigation**	DR	**Navigation**	DR
Direction	Center	**Direction**	Center	**Direction**	Center	**Direction**	Center	**Direction**	Center	**Direction**	Center	**Direction**	Center	**Direction**	Center
Size	-90	**Size**	2284	**Size**	90	**Size**	1164	**Size**	-90	**Size**	314	**Size**	90	**Size**	1823
Loss Of Guidance	N/A	**Loss Of Guidance**	N/A	**Loss Of Guidance**	N/A	**Loss Of Guidance**	N/A	**Loss Of Guidance**	N/A	**Loss Of Guidance**	N/A	**Loss Of Guidance**	N/A	**Loss Of Guidance**	N/A
Obstacle Avoidance	1	**Obstacle Avoidance**	1	**Obstacle Avoidance**	1	**Obstacle Avoidance**	1	**Obstacle Avoidance**	1	**Obstacle Avoidance**	1	**Obstacle Avoidance**	1	**Obstacle Avoidance**	1
Output	N/A	**Output**	N/A	**Output**	N/A	**Output**	N/A	**Output**	N/A	**Output**	N/A	**Output**	N/A	**Output**	N/A
END OF STEP		**END OF STEP**		**END OF STEP**		**END OF STEP**		**END OF STEP**		**END OF STEP**		**END OF STEP**		**END OF STEP**	
END MODE	Distance	**END MODE**	Distance	**END MODE**	Distance	**END MODE**	Distance	**END MODE**	Distance	**END MODE**	Distance	**END MODE**	Distance	**END MODE**	Distance
END ACTION	Merge	**END ACTION**	Merge	**END ACTION**	Merge	**END ACTION**	Merge	**END ACTION**	Merge	**END ACTION**	Merge	**END ACTION**	Merge	**END ACTION**	Merge
NEXT ROUTE	4	**NEXT ROUTE**	4	**NEXT ROUTE**	4	**NEXT ROUTE**	4	**NEXT ROUTE**	4	**NEXT ROUTE**	4	**NEXT ROUTE**	4	**NEXT ROUTE**	4
NEXT STEP	**10**	**NEXT STEP**	**11**	**NEXT STEP**	**12**	**NEXT STEP**	**13**	**NEXT STEP**	**14**	**NEXT STEP**	**15**	**NEXT STEP**	**16**	**NEXT STEP**	**17**

Route 4: 17		Route 4: 18		Route 4: 19		Route 4: 20		Route 4: 21		Route 4: 22		Route 4: 23		Route 4: 24	
STEP INITIATION		**STEP INITIATION**		**STEP INITIATION**		**STEP INITIATION**		**STEP INITIATION**		**STEP INITIATION**		**STEP INITIATION**		**STEP INITIATION**	
Go Mode	Auto	**Go Mode**	Auto	**Go Mode**	Auto	**Go Mode**	Auto	**Go Mode**	Auto	**Go Mode**	Auto	**Go Mode**	Auto	**Go Mode**	Auto
Radio Input	dio Input 1	**Radio Input**	dio Input 1	**Radio Input**	dio Input 1	**Radio Input**	dio Input 1	**Radio Input**	dio Input 1	**Radio Input**	dio Input 1	**Radio Input**	dio Input 1	**Radio Input**	dio Input 1
Hard Wire Input	N/A	**Hard Wire Input**	N/A	**Hard Wire Input**	Part Preser	**Hard Wire Input**	N/A	**Hard Wire Input**	N/A	**Hard Wire Input**	N/A	**Hard Wire Input**	N/A	**Hard Wire Input**	N/A
BIT	N/A	**BIT**	N/A	**BIT**	N/A	**BIT**	N/A	**BIT**	N/A	**BIT**	N/A	**BIT**	N/A	**BIT**	N/A
STEP ACTION		**STEP ACTION**		**STEP ACTION**		**STEP ACTION**		**STEP ACTION**		**STEP ACTION**		**STEP ACTION**		**STEP ACTION**	
Function	Rotate	**Function**	Reverse	**Function**	Forward	**Function**	Rotate	**Function**	Forward	**Function**	Rotate	**Function**	Forward	**Function**	Rotate
Speed	33	**Speed**	33	**Speed**	33	**Speed**	33	**Speed**	33	**Speed**	33	**Speed**	33	**Speed**	33
Navigation	DR	**Navigation**	DR	**Navigation**	DR	**Navigation**	DR	**Navigation**	DR	**Navigation**	DR	**Navigation**	DR	**Navigation**	DR
Direction	Center	**Direction**	Center	**Direction**	Center	**Direction**	Center	**Direction**	Center	**Direction**	Center	**Direction**	Center	**Direction**	Center
Size	-90	**Size**	97	**Size**	97	**Size**	-90	**Size**	1823	**Size**	-90	**Size**	314	**Size**	90
Loss Of Guidance	N/A	**Loss Of Guidance**	N/A	**Loss Of Guidance**	N/A	**Loss Of Guidance**	N/A	**Loss Of Guidance**	N/A	**Loss Of Guidance**	N/A	**Loss Of Guidance**	N/A	**Loss Of Guidance**	N/A
Obstacle Avoidance	1	**Obstacle Avoidance**	1	**Obstacle Avoidance**	1	**Obstacle Avoidance**	1	**Obstacle Avoidance**	1	**Obstacle Avoidance**	1	**Obstacle Avoidance**	1	**Obstacle Avoidance**	1
Output	N/A	**Output**	6 Raise Pin	**Output**	N/A	**Output**	N/A	**Output**	N/A	**Output**	N/A	**Output**	N/A	**Output**	N/A
END OF STEP		**END OF STEP**		**END OF STEP**		**END OF STEP**		**END OF STEP**		**END OF STEP**		**END OF STEP**		**END OF STEP**	
END MODE	Distance	**END MODE**	Distance	**END MODE**	Distance	**END MODE**	Distance	**END MODE**	Distance	**END MODE**	Distance	**END MODE**	Distance	**END MODE**	Distance
END ACTION	Merge	**END ACTION**	Merge	**END ACTION**	Merge	**END ACTION**	Merge	**END ACTION**	Merge	**END ACTION**	Merge	**END ACTION**	Merge	**END ACTION**	Merge
NEXT ROUTE	4	**NEXT ROUTE**	4	**NEXT ROUTE**	4	**NEXT ROUTE**	4	**NEXT ROUTE**	4	**NEXT ROUTE**	4	**NEXT ROUTE**	4	**NEXT ROUTE**	4
NEXT STEP	**18**	**NEXT STEP**	**19**	**NEXT STEP**	**20**	**NEXT STEP**	**21**	**NEXT STEP**	**22**	**NEXT STEP**	**23**	**NEXT STEP**	**24**	**NEXT STEP**	**25**

Route 4: 25		Route 4: 26		Route 4: 27		Route 4: 28		Route 4: 29		Route 4: 30		Route 4: 31		Route 4: 32	
STEP INITIATION		**STEP INITIATION**		**STEP INITIATION**		**STEP INITIATION**		**STEP INITIATION**		**STEP INITIATION**		**STEP INITIATION**		**STEP INITIATION**	
Go Mode	Auto	**Go Mode**	Auto	**Go Mode**	Auto	**Go Mode**	Auto	**Go Mode**	Auto	**Go Mode**	Auto	**Go Mode**	Auto	**Go Mode**	Auto
Radio Input	dio Input 1	**Radio Input**	dio Input 1	**Radio Input**	dio Input 1	**Radio Input**	dio Input 1	**Radio Input**	dio Input 1	**Radio Input**	dio Input 1	**Radio Input**	dio Input 1	**Radio Input**	dio Input 1
Hard Wire Input	N/A	**Hard Wire Input**	N/A	**Hard Wire Input**	N/A	**Hard Wire Input**	N/A	**Hard Wire Input**	N/A	**Hard Wire Input**	N/A	**Hard Wire Input**	N/A	**Hard Wire Input**	N/A
BIT	N/A	**BIT**	N/A	**BIT**	N/A	**BIT**	N/A	**BIT**	N/A	**BIT**	N/A	**BIT**	N/A	**BIT**	N/A
STEP ACTION		**STEP ACTION**		**STEP ACTION**		**STEP ACTION**		**STEP ACTION**		**STEP ACTION**		**STEP ACTION**		**STEP ACTION**	
Function	Forward	**Function**	Rotate	**Function**	Forward	**Function**	Rotate	**Function**	Reverse	**Function**	Delay	**Function**	Forward	**Function**	Rotate
Speed	33	**Speed**	33	**Speed**	33	**Speed**	33	**Speed**	33	**Speed**	33	**Speed**	33	**Speed**	33
Navigation	DR	**Navigation**	DR	**Navigation**	DR	**Navigation**	DR	**Navigation**	DR	**Navigation**	DR	**Navigation**	DR	**Navigation**	DR
Direction	Center	**Direction**	Center	**Direction**	Center	**Direction**	Center	**Direction**	Center	**Direction**	Center	**Direction**	Center	**Direction**	Center
Size	1164	**Size**	90	**Size**	1868	**Size**	-90	**Size**	109	**Size**	5	**Size**	109	**Size**	-90
Loss Of Guidance	N/A	**Loss Of Guidance**	N/A	**Loss Of Guidance**	N/A	**Loss Of Guidance**	N/A	**Loss Of Guidance**	N/A	**Loss Of Guidance**	N/A	**Loss Of Guidance**	N/A	**Loss Of Guidance**	N/A
Obstacle Avoidance	1	**Obstacle Avoidance**	1	**Obstacle Avoidance**	1	**Obstacle Avoidance**	1	**Obstacle Avoidance**	1	**Obstacle Avoidance**	1	**Obstacle Avoidance**	1	**Obstacle Avoidance**	1
Output	N/A	**Output**	N/A	**Output**	N/A	**Output**	N/A	**Output**	N/A	**Output**	#6 Pin Drop	**Output**	N/A	**Output**	N/A
END OF STEP		**END OF STEP**		**END OF STEP**		**END OF STEP**		**END OF STEP**		**END OF STEP**		**END OF STEP**		**END OF STEP**	
END MODE	Distance	**END MODE**	Distance	**END MODE**	Distance	**END MODE**	Distance	**END MODE**	Distance	**END MODE**	Time	**END MODE**	Distance	**END MODE**	Distance
END ACTION	Merge	**END ACTION**	Merge	**END ACTION**	Merge	**END ACTION**	Merge	**END ACTION**	Merge	**END ACTION**	Merge	**END ACTION**	Merge	**END ACTION**	Merge
NEXT ROUTE	4	**NEXT ROUTE**	4	**NEXT ROUTE**	4	**NEXT ROUTE**	4	**NEXT ROUTE**	4	**NEXT ROUTE**	4	**NEXT ROUTE**	4	**NEXT ROUTE**	4
NEXT STEP	**26**	**NEXT STEP**	**27**	**NEXT STEP**	**28**	**NEXT STEP**	**29**	**NEXT STEP**	**30**	**NEXT STEP**	**31**	**NEXT STEP**	**32**	**NEXT STEP**	**33**

Route 4: 33		Route 4: 34		Route 4: 35		Route 4: 36		Route 4: 37		Route 4: 38		Route 4: 39		Route 4: 40	
STEP INITIATION		STEP INITIATION		STEP INITIATION		STEP INITIATION		STEP INITIATION		STEP INITIATION		STEP INITIATION		STEP INITIATION	
Go Mode	Auto	**Go Mode**	Auto	**Go Mode**	Auto	**Go Mode**	Auto	**Go Mode**	Auto	**Go Mode**	Auto	**Go Mode**	Auto	**Go Mode**	Auto
Radio Input	dio Input 1-	**Radio Input**	dio Input 1-	**Radio Input**	dio Input 1	**Radio Input**	dio Input 1	**Radio Input**	dio Input 1	**Radio Input**	dio Input 1	**Radio Input**	dio Input 1	**Radio Input**	dio Input 1
Hard Wire Input	N/A	**Hard Wire Input**	N/A	**Hard Wire Input**	N/a	**Hard Wire Input**	N/a	**Hard Wire Input**	N/a	**Hard Wire Input**	N/a	**Hard Wire Input**	N/a	**Hard Wire Input**	N/a
BIT	N/A	**BIT**	N/A	**BIT**	N/A	**BIT**	N/A	**BIT**	N/A	**BIT**	N/A	**BIT**	N/A	**BIT**	N/A
STEP ACTION		STEP ACTION		STEP ACTION		STEP ACTION		STEP ACTION		STEP ACTION		STEP ACTION		STEP ACTION	
Function	Forward	**Function**	Forward	**Function**	Rotate	**Function**	Forward	**Function**	Forward	**Function**	Rotate	**Function**	Forward	**Function**	Rotate
Speed	33	**Speed**	33	**Speed**	33	**Speed**	33	**Speed**	33	**Speed**	33	**Speed**	33	**Speed**	33
Navigation	DR	**Navigation**	DR	**Navigation**	DR	**Navigation**	DR	**Navigation**	DR	**Navigation**	DR	**Navigation**	DR	**Navigation**	DR
Direction	Center	**Direction**	Center	**Direction**	Center	**Direction**	Center	**Direction**	Center	**Direction**	Center	**Direction**	Center	**Direction**	Center
Size	4152	**Size**	4152	**Size**	90	**Size**	962	**Size**	962	**Size**	-90	**Size**	525	**Size**	90
Loss Of Guidance	N/A	**Loss Of Guidance**	N/A	**Loss Of Guidance**	N/A	**Loss Of Guidance**	N/A	**Loss Of Guidance**	N/A	**Loss Of Guidance**	N/A	**Loss Of Guidance**	N/A	**Loss Of Guidance**	N/A
Obstacle Avoidance	1	**Obstacle Avoidance**	1	**Obstacle Avoidance**	1	**Obstacle Avoidance**	1	**Obstacle Avoidance**	1	**Obstacle Avoidance**	1	**Obstacle Avoidance**	1	**Obstacle Avoidance**	1
Output	N/A	**Output**	N/A	**Output**	N/a	**Output**	N/a	**Output**	N/a	**Output**	N/a	**Output**	N/a	**Output**	N/a
END OF STEP		END OF STEP		END OF STEP		END OF STEP		END OF STEP		END OF STEP		END OF STEP		END OF STEP	
END MODE	Distance	**END MODE**	Distance	**END MODE**	Distance	**END MODE**	Distance	**END MODE**	Distance	**END MODE**	Distance	**END MODE**	Distance	**END MODE**	Distance
END ACTION	Merge	**END ACTION**	Merge	**END ACTION**	Merge	**END ACTION**	Merge	**END ACTION**	Merge	**END ACTION**	Merge	**END ACTION**	Merge	**END ACTION**	Merge
NEXT ROUTE	4	**NEXT ROUTE**	4	**NEXT ROUTE**	4	**NEXT ROUTE**	4	**NEXT ROUTE**	4	**NEXT ROUTE**	4	**NEXT ROUTE**	4	**NEXT ROUTE**	4
NEXT STEP	**34**	**NEXT STEP**	**35**	**NEXT STEP**	**36**	**NEXT STEP**	**37**	**NEXT STEP**	**38**	**NEXT STEP**	**39**	**NEXT STEP**	**40**	**NEXT STEP**	**41**

Route 4: 41		Route 4: 42		Route 4: 43		Route 0: 1	
STEP INITIATION		STEP INITIATION		STEP INITIATION		STEP INITIATION	
Go Mode	Auto	**Go Mode**	Auto	**Go Mode**	Auto	**Go Mode**	nput Trigge
Radio Input	dio Input 1	**Radio Input**	dio Input 1	**Radio Input**	dio Input 1	**Radio Input**	dio Input 1
Hard Wire Input	N/a	**Hard Wire Input**	N/a	**Hard Wire Input**	N/a	**Hard Wire Input**	N/a
BIT	N/A	**BIT**	N/A	**BIT**	N/A	**BIT**	BIT #1-#10
STEP ACTION		STEP ACTION		STEP ACTION		STEP ACTION	
Function	Forward	**Function**	Rotate	**Function**	Reverse	**Function**	Auto
Speed	33	**Speed**	33	**Speed**	33	**Speed**	33
Navigation	DR	**Navigation**	DR	**Navigation**	DR	**Navigation**	DR
Direction	Center	**Direction**	Center	**Direction**	Center	**Direction**	Center
Size	417	**Size**	-90	**Size**	66	**Size**	66
Loss Of Guidance	N/A	**Loss Of Guidance**	N/A	**Loss Of Guidance**	N/A	**Loss Of Guidance**	N/A
Obstacle Avoidance	1	**Obstacle Avoidance**	1	**Obstacle Avoidance**	1	**Obstacle Avoidance**	1
Output	N/a	**Output**	N/a	**Output**	N/a	**Output**	N/a
END OF STEP		END OF STEP		END OF STEP		END OF STEP	
END MODE	Distance	**END MODE**	Distance	**END MODE**	Distance	**END MODE**	Distance
END ACTION	Merge	**END ACTION**	Merge	**END ACTION**	Merge	**END ACTION**	Merge
NEXT ROUTE	4	**NEXT ROUTE**	4	**NEXT ROUTE**	0	**NEXT ROUTE**	0
NEXT STEP	**42**	**NEXT STEP**	**43**	**NEXT STEP**	1	**NEXT STEP**	1

Tier 2 Route 5

Route 5: 1		Route 5: 2		Route 5: 3		Route 5: 4		Route 5: 5		Route 5: 6		Route 5: 7		Route 5: 8	
STEP INITIATION		**STEP INITIATION**		**STEP INITIATION**		**STEP INITIATION**		**STEP INITIATION**		**STEP INITIATION**		**STEP INITIATION**		**STEP INITIATION**	
Go Mode	put Trigger	**Go Mode**	Auto	**Go Mode**	Auto	**Go Mode**	Auto	**Go Mode**	Auto	**Go Mode**	Auto	**Go Mode**	Auto	**Go Mode**	Auto
Radio Input	dio Input 1	**Radio Input**	dio Input 1	**Radio Input**	dio Input 1	**Radio Input**	dio Input 1	**Radio Input**	dio Input 1	**Radio Input**	dio Input 1	**Radio Input**	dio Input 1	**Radio Input**	dio Input 1
Hard Wire Input	N/A	**Hard Wire Input**	N/A	**Hard Wire Input**	N/A	**Hard Wire Input**	N/A	**Hard Wire Input**	N/A	**Hard Wire Input**	N/A	**Hard Wire Input**	N/A	**Hard Wire Input**	N/A
BIT	Bit #1 off	**BIT**	N/A	**BIT**	N/A	**BIT**	N/A	**BIT**	N/A	**BIT**	N/A	**BIT**	N/A	**BIT**	N/A
	Bit #8 On														
Home Position RFID	Bit #10 On														
STEP ACTION		**STEP ACTION**		**STEP ACTION**		**STEP ACTION**		**STEP ACTION**		**STEP ACTION**		**STEP ACTION**		**STEP ACTION**	
Function	Dispatch	**Function**	Forward	**Function**	Rotate	**Function**	Forward	**Function**	Rotate	**Function**	Forward	**Function**	Rotate	**Function**	Forward
Speed	N/A	**Speed**	33	**Speed**	33	**Speed**	33	**Speed**	33	**Speed**	33	**Speed**	33	**Speed**	33
Navigation	N/A	**Navigation**	DR	**Navigation**	DR	**Navigation**	DR	**Navigation**	DR	**Navigation**	DR	**Navigation**	DR	**Navigation**	DR
Direction	N/A	**Direction**	Center	**Direction**	Center	**Direction**	Center	**Direction**	Center	**Direction**	Center	**Direction**	Center	**Direction**	Center
Size	N/A	**Size**	66	**Size**	-90	**Size**	417	**Size**	-90	**Size**	525	**Size**	90	**Size**	962
Loss Of Guidance	N/A	**Loss Of Guidance**	N/A	**Loss Of Guidance**	N/A	**Loss Of Guidance**	N/A	**Loss Of Guidance**	N/A	**Loss Of Guidance**	N/A	**Loss Of Guidance**	N/A	**Loss Of Guidance**	N/A
Obstacle Avoidance	N/A	**Obstacle Avoidance**	1	**Obstacle Avoidance**	1	**Obstacle Avoidance**	1	**Obstacle Avoidance**	1	**Obstacle Avoidance**	1	**Obstacle Avoidance**	1	**Obstacle Avoidance**	1
Output	N/A	**Output**	N/A	**Output**	N/A	**Output**	N/A	**Output**	N/A	**Output**	N/A	**Output**	N/A	**Output**	N/A
END OF STEP		**END OF STEP**		**END OF STEP**		**END OF STEP**		**END OF STEP**		**END OF STEP**		**END OF STEP**		**END OF STEP**	
END MODE	N/A	**END MODE**	Distance	**END MODE**	Distance	**END MODE**	Distance	**END MODE**	Distance	**END MODE**	Distance	**END MODE**	Distance	**END MODE**	Distance
END ACTION	e Bit #8, #1	**END ACTION**	Merge	**END ACTION**	Merge	**END ACTION**	Merge	**END ACTION**	Merge	**END ACTION**	Merge	**END ACTION**	Merge	**END ACTION**	Merge
NEXT ROUTE	5	**NEXT ROUTE**	5	**NEXT ROUTE**	5	**NEXT ROUTE**	5	**NEXT ROUTE**	5	**NEXT ROUTE**	5	**NEXT ROUTE**	5	**NEXT ROUTE**	5
NEXT STEP	**2**	**NEXT STEP**	**3**	**NEXT STEP**	**4**	**NEXT STEP**	**5**	**NEXT STEP**	**6**	**NEXT STEP**	**7**	**NEXT STEP**	**8**	**NEXT STEP**	**9**

Route 5: 9		Route 5: 10		Route 5: 11		Route 5: 12		Route 5: 13		Route 5: 14		Route 5: 15		Route 5: 16	
STEP INITIATION		**STEP INITIATION**		**STEP INITIATION**		**STEP INITIATION**		**STEP INITIATION**		**STEP INITIATION**		**STEP INITIATION**		**STEP INITIATION**	
Go Mode	Auto	**Go Mode**	Auto	**Go Mode**	Auto	**Go Mode**	Auto	**Go Mode**	Auto	**Go Mode**	Auto	**Go Mode**	Auto	**Go Mode**	Auto
Radio Input	dio Input 1	**Radio Input**	dio Input 1	**Radio Input**	dio Input 1	**Radio Input**	dio Input 1	**Radio Input**	dio Input 1	**Radio Input**	dio Input 1	**Radio Input**	dio Input 1	**Radio Input**	dio Input 1
Hard Wire Input	N/A	**Hard Wire Input**	N/A	**Hard Wire Input**	N/A	**Hard Wire Input**	N/A	**Hard Wire Input**	Cart prese	**Hard Wire Input**	N/A	**Hard Wire Input**	N/A	**Hard Wire Input**	N/A
BIT	N/A	**BIT**	N/A	**BIT**	N/A	**BIT**	N/A	**BIT**	N/A	**BIT**	N/A	**BIT**	N/A	**BIT**	N/A
STEP ACTION		**STEP ACTION**		**STEP ACTION**		**STEP ACTION**		**STEP ACTION**		**STEP ACTION**		**STEP ACTION**		**STEP ACTION**	
Function	Rotate	**Function**	Forward	**Function**	Rotate	**Function**	Reverse	**Function**	Forward	**Function**	Rotate	**Function**	Forward	**Function**	Rotate
Speed	33	**Speed**	33	**Speed**	33	**Speed**	33	**Speed**	33	**Speed**	33	**Speed**	33	**Speed**	33
Navigation	DR	**Navigation**	DR	**Navigation**	DR	**Navigation**	DR	**Navigation**	DR	**Navigation**	DR	**Navigation**	DR	**Navigation**	DR
Direction	Center	**Direction**	Center	**Direction**	Center	**Direction**	Center	**Direction**	Center	**Direction**	Center	**Direction**	Center	**Direction**	Center
Size	-90	**Size**	4213	**Size**	-90	**Size**	109	**Size**	109	**Size**	-90	**Size**	2298	**Size**	90
Loss Of Guidance	N/A	**Loss Of Guidance**	N/A	**Loss Of Guidance**	N/A	**Loss Of Guidance**	N/A	**Loss Of Guidance**	N/A	**Loss Of Guidance**	N/A	**Loss Of Guidance**	N/A	**Loss Of Guidance**	N/A
Obstacle Avoidance	1	**Obstacle Avoidance**	1	**Obstacle Avoidance**	1	**Obstacle Avoidance**	1	**Obstacle Avoidance**	1	**Obstacle Avoidance**	1	**Obstacle Avoidance**	1	**Obstacle Avoidance**	1
Output	N/A	**Output**	N/A	**Output**	N/A	**Output**	#6 pin up	**Output**	N/A	**Output**	N/A	**Output**	N/A	**Output**	N/A
END OF STEP		**END OF STEP**		**END OF STEP**		**END OF STEP**		**END OF STEP**		**END OF STEP**		**END OF STEP**		**END OF STEP**	
END MODE	Distance	**END MODE**	Distance	**END MODE**	Distance	**END MODE**	Distance	**END MODE**	Distance	**END MODE**	Distance	**END MODE**	Distance	**END MODE**	Distance
END ACTION	Merge	**END ACTION**	Merge	**END ACTION**	Merge	**END ACTION**	Merge	**END ACTION**	Merge	**END ACTION**	Merge	**END ACTION**	Merge	**END ACTION**	Merge
NEXT ROUTE	5	**NEXT ROUTE**	5	**NEXT ROUTE**	5	**NEXT ROUTE**	5	**NEXT ROUTE**	5	**NEXT ROUTE**	5	**NEXT ROUTE**	5	**NEXT ROUTE**	5
NEXT STEP	**10**	**NEXT STEP**	**11**	**NEXT STEP**	**12**	**NEXT STEP**	**13**	**NEXT STEP**	**14**	**NEXT STEP**	**15**	**NEXT STEP**	**16**	**NEXT STEP**	**17**

Route 5: 17		Route 5: 18		Route 5: 19		Route 5: 20		Route 5: 21		Route 5: 22		Route 5: 23		Route 5: 24	
STEP INITIATION		**STEP INITIATION**		**STEP INITIATION**		**STEP INITIATION**		**STEP INITIATION**		**STEP INITIATION**		**STEP INITIATION**		**STEP INITIATION**	
Go Mode	Auto	**Go Mode**	Auto	**Go Mode**	Auto	**Go Mode**	Auto	**Go Mode**	Auto	**Go Mode**	Auto	**Go Mode**	Auto	**Go Mode**	Auto
Radio Input	dio Input 1	**Radio Input**	dio Input 1	**Radio Input**	dio Input 1	**Radio Input**	dio Input 1	**Radio Input**	dio Input 1	**Radio Input**	dio Input 1	**Radio Input**	dio Input 1	**Radio Input**	dio Input 1
Hard Wire Input	N/A	**Hard Wire Input**	N/A	**Hard Wire Input**	N/A	**Hard Wire Input**	N/A	**Hard Wire Input**	N/A	**Hard Wire Input**	N/A	**Hard Wire Input**	N/A	**Hard Wire Input**	N/A
BIT	N/A	**BIT**	N/A	**BIT**	N/A	**BIT**	N/A	**BIT**	N/A	**BIT**	N/A	**BIT**	N/A	**BIT**	N/A
STEP ACTION		**STEP ACTION**		**STEP ACTION**		**STEP ACTION**		**STEP ACTION**		**STEP ACTION**		**STEP ACTION**		**STEP ACTION**	
Function	Forward	**Function**	Rotate	**Function**	Forward	**Function**	Rotate	**Function**	Forward	**Function**	Rotate	**Function**	Forward	**Function**	Rotate
Speed	33	**Speed**	33	**Speed**	33	**Speed**	33	**Speed**	33	**Speed**	33	**Speed**	33	**Speed**	33
Navigation	DR	**Navigation**	DR	**Navigation**	DR	**Navigation**	DR	**Navigation**	DR	**Navigation**	DR	**Navigation**	DR	**Navigation**	DR
Direction	Center	**Direction**	Center	**Direction**	Center	**Direction**	Center	**Direction**	Center	**Direction**	Center	**Direction**	Center	**Direction**	Center
Size	1007	**Size**	90	**Size**	657	**Size**	90	**Size**	403	**Size**	-90	**Size**	115	**Size**	-90
Loss Of Guidance	N/A	**Loss Of Guidance**	N/A	**Loss Of Guidance**	N/A	**Loss Of Guidance**	N/A	**Loss Of Guidance**	N/A	**Loss Of Guidance**	N/A	**Loss Of Guidance**	N/A	**Loss Of Guidance**	N/A
Obstacle Avoidance	1	**Obstacle Avoidance**	1	**Obstacle Avoidance**	1	**Obstacle Avoidance**	1	**Obstacle Avoidance**	1	**Obstacle Avoidance**	1	**Obstacle Avoidance**	1	**Obstacle Avoidance**	1
Output	N/A	**Output**	N/A	**Output**	N/A	**Output**	N/A	**Output**	N/A	**Output**	N/A	**Output**	N/A	**Output**	N/A
END OF STEP		**END OF STEP**		**END OF STEP**		**END OF STEP**		**END OF STEP**		**END OF STEP**		**END OF STEP**		**END OF STEP**	
END MODE	Distance	**END MODE**	Distance	**END MODE**	Distance	**END MODE**	Distance	**END MODE**	Distance	**END MODE**	Distance	**END MODE**	Distance	**END MODE**	Distance
END ACTION	Merge	**END ACTION**	Merge	**END ACTION**	Merge	**END ACTION**	Merge	**END ACTION**	Merge	**END ACTION**	Merge	**END ACTION**	Merge	**END ACTION**	Merge
NEXT ROUTE	5	**NEXT ROUTE**	5	**NEXT ROUTE**	5	**NEXT ROUTE**	5	**NEXT ROUTE**	5	**NEXT ROUTE**	5	**NEXT ROUTE**	5	**NEXT ROUTE**	5
NEXT STEP	**18**	**NEXT STEP**	**19**	**NEXT STEP**	**20**	**NEXT STEP**	**21**	**NEXT STEP**	**22**	**NEXT STEP**	**23**	**NEXT STEP**	**24**	**NEXT STEP**	**25**

Route 5: 25		Route 5: 26		Route 5: 27		Route 5: 28		Route 5: 29		Route 5: 30		Route 5: 31		Route 5: 32	
STEP INITIATION		**STEP INITIATION**		**STEP INITIATION**		**STEP INITIATION**		**STEP INITIATION**		**STEP INITIATION**		**STEP INITIATION**		**STEP INITIATION**	
Go Mode	Auto	**Go Mode**	Auto	**Go Mode**	Auto	**Go Mode**	Auto	**Go Mode**	Auto	**Go Mode**	Auto	**Go Mode**	Auto	**Go Mode**	Auto
Radio Input	dio Input 1	**Radio Input**	dio Input 1	**Radio Input**	dio Input 1	**Radio Input**	dio Input 1	**Radio Input**	dio Input 1	**Radio Input**	dio Input 1	**Radio Input**	dio Input 1	**Radio Input**	dio Input 1
Hard Wire Input	N/A	**Hard Wire Input**	N/A	**Hard Wire Input**	N/A	**Hard Wire Input**	N/A	**Hard Wire Input**	N/A	**Hard Wire Input**	N/A	**Hard Wire Input**	N/A	**Hard Wire Input**	N/A
BIT	N/A	**BIT**	N/A	**BIT**	N/A	**BIT**	N/A	**BIT**	N/A	**BIT**	N/A	**BIT**	N/A	**BIT**	N/A
STEP ACTION		**STEP ACTION**		**STEP ACTION**		**STEP ACTION**		**STEP ACTION**		**STEP ACTION**		**STEP ACTION**		**STEP ACTION**	
Function	Reverse	**Function**	Delay	**Function**	Forward	**Function**	Rotate	**Function**	Forward	**Function**	Rotate	**Function**	Forward	**Function**	Rotate
Speed	33	**Speed**	33	**Speed**	33	**Speed**	33	**Speed**	33	**Speed**	33	**Speed**	33	**Speed**	33
Navigation	DR	**Navigation**	DR	**Navigation**	DR	**Navigation**	DR	**Navigation**	DR	**Navigation**	DR	**Navigation**	DR	**Navigation**	DR
Direction	Center	**Direction**	Center	**Direction**	Center	**Direction**	Center	**Direction**	Center	**Direction**	Center	**Direction**	Center	**Direction**	Center
Size	79	**Size**	5	**Size**	79	**Size**	-90	**Size**	115	**Size**	90	**Size**	403	**Size**	-90
Loss Of Guidance	N/A	**Loss Of Guidance**	N/A	**Loss Of Guidance**	N/A	**Loss Of Guidance**	N/A	**Loss Of Guidance**	N/A	**Loss Of Guidance**	N/A	**Loss Of Guidance**	N/A	**Loss Of Guidance**	N/A
Obstacle Avoidance	1	**Obstacle Avoidance**	1	**Obstacle Avoidance**	1	**Obstacle Avoidance**	1	**Obstacle Avoidance**	1	**Obstacle Avoidance**	1	**Obstacle Avoidance**	1	**Obstacle Avoidance**	1
Output	N/A	**Output**	N/A	**Output**	N/A	**Output**	N/A	**Output**	N/A	**Output**	N/A	**Output**	N/A	**Output**	N/A
END OF STEP		**END OF STEP**		**END OF STEP**		**END OF STEP**		**END OF STEP**		**END OF STEP**		**END OF STEP**		**END OF STEP**	
END MODE	Distance	**END MODE**	Time	**END MODE**	Distance	**END MODE**	Distance	**END MODE**	Distance	**END MODE**	Distance	**END MODE**	Distance	**END MODE**	Distance
END ACTION	Merge	**END ACTION**	Merge	**END ACTION**	Merge	**END ACTION**	Merge	**END ACTION**	Merge	**END ACTION**	Merge	**END ACTION**	Merge	**END ACTION**	Merge
NEXT ROUTE	5	**NEXT ROUTE**	5	**NEXT ROUTE**	5	**NEXT ROUTE**	5	**NEXT ROUTE**	5	**NEXT ROUTE**	5	**NEXT ROUTE**	5	**NEXT ROUTE**	5
NEXT STEP	**26**	**NEXT STEP**	**27**	**NEXT STEP**	**28**	**NEXT STEP**	**29**	**NEXT STEP**	**30**	**NEXT STEP**	**31**	**NEXT STEP**	**32**	**NEXT STEP**	**33**

Route 5: 33		Route 5: 34		Route 5: 35		Route 5: 36		Route 5: 37		Route 5: 38		Route 5: 39		Route 5: 40	
STEP INITIATION		STEP INITIATION		STEP INITIATION		STEP INITIATION		STEP INITIATION		STEP INITIATION		STEP INITIATION		STEP INITIATION	
Go Mode	Auto	**Go Mode**	Auto	**Go Mode**	Auto	**Go Mode**	Auto	**Go Mode**	Auto	**Go Mode**	Auto	**Go Mode**	Auto	**Go Mode**	Auto
Radio Input	dio Input 1	**Radio Input**	dio Input 1	**Radio Input**	dio Input 1	**Radio Input**	dio Input 1	**Radio Input**	dio Input 1	**Radio Input**	dio Input 1	**Radio Input**	dio Input 1	**Radio Input**	dio Input 1
Hard Wire Input	N/A	**Hard Wire Input**	N/A	**Hard Wire Input**	N/A	**Hard Wire Input**	N/A	**Hard Wire Input**	N/A	**Hard Wire Input**	N/a	**Hard Wire Input**	N/a	**Hard Wire Input**	N/a
BIT	N/A	**BIT**	N/A	**BIT**	N/A	**BIT**	N/A	**BIT**	N/A	**BIT**	N/A	**BIT**	N/A	**BIT**	N/A
STEP ACTION		STEP ACTION		STEP ACTION		STEP ACTION		STEP ACTION		STEP ACTION		STEP ACTION		STEP ACTION	
Function	Forward	**Function**	Rotate	**Function**	Forward	**Function**	Rotate	**Function**	Forward	**Function**	Rotate	**Function**	Forward	**Function**	Forward
Speed	33	**Speed**	33	**Speed**	33	**Speed**	33	**Speed**	33	**Speed**	33	**Speed**	33	**Speed**	33
Navigation	DR	**Navigation**	DR	**Navigation**	DR	**Navigation**	DR	**Navigation**	DR	**Navigation**	DR	**Navigation**	DR	**Navigation**	DR
Direction	Center	**Direction**	Center	**Direction**	Center	**Direction**	Center	**Direction**	Center	**Direction**	Center	**Direction**	Center	**Direction**	Center
Size	657	**Size**	-90	**Size**	1007	**Size**	90	**Size**	1915	**Size**	90	**Size**	962	**Size**	962
Loss Of Guidance	N/A	**Loss Of Guidance**	N/A	**Loss Of Guidance**	N/A	**Loss Of Guidance**	N/A	**Loss Of Guidance**	N/A	**Loss Of Guidance**	N/A	**Loss Of Guidance**	N/A	**Loss Of Guidance**	N/A
Obstacle Avoidance	1	**Obstacle Avoidance**	1	**Obstacle Avoidance**	1	**Obstacle Avoidance**	1	**Obstacle Avoidance**	1	**Obstacle Avoidance**	1	**Obstacle Avoidance**	1	**Obstacle Avoidance**	1
Output	N/A	**Output**	N/A	**Output**	N/A	**Output**	N/A	**Output**	N/A	**Output**	N/a	**Output**	N/a	**Output**	N/a
END OF STEP		END OF STEP		END OF STEP		END OF STEP		END OF STEP		END OF STEP		END OF STEP		END OF STEP	
END MODE	Distance	**END MODE**	Distance	**END MODE**	Distance	**END MODE**	Distance	**END MODE**	Distance	**END MODE**	Distance	**END MODE**	Distance	**END MODE**	Distance
END ACTION	Merge	**END ACTION**	Merge	**END ACTION**	Merge	**END ACTION**	Merge	**END ACTION**	Merge	**END ACTION**	Merge	**END ACTION**	Merge	**END ACTION**	Merge
NEXT ROUTE	5	**NEXT ROUTE**	5	**NEXT ROUTE**	5	**NEXT ROUTE**	5	**NEXT ROUTE**	5	**NEXT ROUTE**	5	**NEXT ROUTE**	5	**NEXT ROUTE**	5
NEXT STEP	**34**	**NEXT STEP**	**35**	**NEXT STEP**	**36**	**NEXT STEP**	**37**	**NEXT STEP**	**38**	**NEXT STEP**	**39**	**NEXT STEP**	**40**	**NEXT STEP**	**41**

Route 5: 41		Route 5: 42		Route 5: 43		Route 5: 44		Route 5: 45		Route 5: 46		Route 5: 47	
STEP INITIATION		STEP INITIATION		STEP INITIATION		STEP INITIATION		STEP INITIATION		STEP INITIATION		STEP INITIATION	
Go Mode	Auto	**Go Mode**	Auto	**Go Mode**	Auto	**Go Mode**	Auto	**Go Mode**	Auto	**Go Mode**	Auto	**Go Mode**	nput Trigge
Radio Input	dio Input 1	**Radio Input**	dio Input 1	**Radio Input**	dio Input 1	**Radio Input**	dio Input 1	**Radio Input**	dio Input 1	**Radio Input**	dio Input 1	**Radio Input**	dio Input 1
Hard Wire Input	N/a	**Hard Wire Input**	N/a	**Hard Wire Input**	N/a	**Hard Wire Input**	N/a	**Hard Wire Input**	N/a	**Hard Wire Input**	N/a	**Hard Wire Input**	N/a
BIT	N/A	**BIT**	N/A	**BIT**	N/A	**BIT**	N/A	**BIT**	N/A	**BIT**	N/A	**BIT**	BIT #1-#10
STEP ACTION		STEP ACTION		STEP ACTION		STEP ACTION		STEP ACTION		STEP ACTION		STEP ACTION	
Function	Rotate	**Function**	Forward	**Function**	Rotate	**Function**	Forward	**Function**	Rotate	**Function**	Reverse	**Function**	Auto
Speed	33	**Speed**	33	**Speed**	33	**Speed**	33	**Speed**	33	**Speed**	33	**Speed**	33
Navigation	DR	**Navigation**	DR	**Navigation**	DR	**Navigation**	DR	**Navigation**	DR	**Navigation**	DR	**Navigation**	DR
Direction	Center	**Direction**	Center	**Direction**	Center	**Direction**	Center	**Direction**	Center	**Direction**	Center	**Direction**	Center
Size	-90	**Size**	525	**Size**	90	**Size**	417	**Size**	-90	**Size**	66	**Size**	66
Loss Of Guidance	N/A	**Loss Of Guidance**	N/A	**Loss Of Guidance**	N/A	**Loss Of Guidance**	N/A	**Loss Of Guidance**	N/A	**Loss Of Guidance**	N/A	**Loss Of Guidance**	N/A
Obstacle Avoidance	1	**Obstacle Avoidance**	1	**Obstacle Avoidance**	1	**Obstacle Avoidance**	1	**Obstacle Avoidance**	1	**Obstacle Avoidance**	1	**Obstacle Avoidance**	1
Output	N/a	**Output**	N/a	**Output**	N/a	**Output**	N/a	**Output**	N/a	**Output**	N/a	**Output**	N/a
END OF STEP		END OF STEP		END OF STEP		END OF STEP		END OF STEP		END OF STEP		END OF STEP	
END MODE	Distance	**END MODE**	Distance	**END MODE**	Distance	**END MODE**	Distance	**END MODE**	Distance	**END MODE**	Distance	**END MODE**	Distance
END ACTION	Merge	**END ACTION**	Merge	**END ACTION**	Merge	**END ACTION**	Merge	**END ACTION**	Merge	**END ACTION**	Merge	**END ACTION**	Merge
NEXT ROUTE	5	**NEXT ROUTE**	5	**NEXT ROUTE**	5	**NEXT ROUTE**	5	**NEXT ROUTE**	5	**NEXT ROUTE**	0	**NEXT ROUTE**	0
NEXT STEP	**42**	**NEXT STEP**	**43**	**NEXT STEP**	**44**	**NEXT STEP**	**45**	**NEXT STEP**	**46**	**NEXT STEP**	1	**NEXT STEP**	1

Appendix – C

Tier 3 Route 0

Route 0: 1	
STEP INITIATION	
Go Mode	Input Trigger
Radio Input	Radio Input 1-23
Hard Wire Input	N/a
BIT	BIT #1-#24
STEP ACTION	
Function	Auto
Speed	33
Navigation	DR
Direction	Center
Size	0
Loss Of Guidance	N/A
Obstacle Avoidance	1
Output	N/a
END OF STEP	
END MODE	Distance
END ACTION	Merge
NEXT ROUTE	Directory
NEXT STEP	Directory

Tier 3 Route 1

Route 1		Route 1		Route 1		Route 1		Route 1		Route 1		Route 1		Route 1	
Route	1	Route	1	Route	1	Route	1	Route	1	Route	1	Route	1	Route	1
Step	1	Step	2	Step	3	Step	4	Step	5	Step	6	Step	7	Step	8
STEP INITIATION		**STEP INITIATION**		**STEP INITIATION**		**STEP INITIATION**		**STEP INITIATION**		**STEP INITIATION**		**STEP INITIATION**		**STEP INITIATION**	
Go Mode	Input Triggers	Go Mode	Auto	Go Mode	Auto	Go Mode	Auto	Go Mode	Auto	Go Mode	Auto	Go Mode	Auto	Go Mode	Auto
Radio Input	Radio #1 "Ford"	Radio Input	N/A	Radio Input	N/A	Radio Input	N/A	Radio Input	N/A	Radio Input	N/A	Radio Input	N/A	Radio Input	N/A
Home RFID	Radio #2 "Bin Full"														
Hard Wire Input	N/A	Hard Wire Input	N/A	Hard Wire Input	N/A	Hard Wire Input	N/A	Hard Wire Input	N/A	Hard Wire Input	N/A	Hard Wire Input	N/A	Hard Wire Input	N/A
BIT	Bit #1 On Bit #2 On	BIT	N/A	BIT	N/A	BIT	N/A	BIT	N/A	BIT	N/A	BIT	N/A	BIT	N/A
STEP ACTION		**STEP ACTION**		**STEP ACTION**		**STEP ACTION**		**STEP ACTION**		**STEP ACTION**		**STEP ACTION**		**STEP ACTION**	
Function	Dispatch	Function	Forward	Function	Rotate	Function	Forward	Function	Rotate	Function	Reverse	Function	Rotate	Function	Reverse
Speed	N/A	Speed	33	Speed	33	Speed	33	Speed	33	Speed	33	Speed	33	Speed	33
Navigation	N/A	Navigation	DR	Navigation	DR	Navigation	DR	Navigation	DR	Navigation	DR	Navigation	DR	Navigation	DR
Direction	N/A	Direction	Center	Direction	N/A	Direction	Center	Direction	N/A	Direction	Center	Direction	N/A	Direction	Center
Size	N/A	Size	66	Size	-90	Size	168	Size	90	Size	120	Size	-90	Size	84
Loss Of Guidance	N/A	Loss Of Guidance	N/A	Loss Of Guidance	N/A	Loss Of Guidance	N/A	Loss Of Guidance	N/A	Loss Of Guidance	N/A	Loss Of Guidance	N/A	Loss Of Guidance	N/A
Obstacle Avoidance	N/A	Obstacle Avoidance	1	Obstacle Avoidance	1	Obstacle Avoidance	1	Obstacle Avoidance	1	Obstacle Avoidance	1	Obstacle Avoidance	1	Obstacle Avoidance	1
Output	N/A	Output	N/A	Output	N/A	Output	N/A	Output	N/A	Output	N/A	Output	N/A	Output	#6- Pin Up
END OF STEP		**END OF STEP**		**END OF STEP**		**END OF STEP**		**END OF STEP**		**END OF STEP**		**END OF STEP**		**END OF STEP**	
END MODE	N/A	END MODE	Distance	END MODE	Distance	END MODE	Distance	END MODE	Distance	END MODE	Distance	END MODE	Distance	END MODE	Distance
END ACTION	Merge Bit #1 off	END ACTION	Merge	END ACTION	Merge	END ACTION	Merge	END ACTION	Merge	END ACTION	Merge	END ACTION	Merge	END ACTION	Merge
NEXT ROUTE	1	NEXT ROUTE	1	NEXT ROUTE	1	NEXT ROUTE	1	NEXT ROUTE	1	NEXT ROUTE	1	NEXT ROUTE	1	NEXT ROUTE	1
NEXT STEP	2	NEXT STEP	3	NEXT STEP	4	NEXT STEP	5	NEXT STEP	6	NEXT STEP	7	NEXT STEP	8	NEXT STEP	9

Route 1		Route 1		Route 1		Route 1		Route 1		Route 1		Route 1		Route 1	
Route	1	Route	1	Route	1	Route	1	Route	1	Route	1	Route	1	Route	1
Step	9	Step	10	Step	11	Step	12	Step	13	Step	14	Step	15	Step	16
STEP INITIATION		**STEP INITIATION**		**STEP INITIATION**		**STEP INITIATION**		**STEP INITIATION**		**STEP INITIATION**		**STEP INITIATION**		**STEP INITIATION**	
Go Mode	Input Triggers	Go Mode	Auto	Go Mode	Auto	Go Mode	Auto	Go Mode	Auto	Go Mode	Auto	Go Mode	Auto	Go Mode	Auto
Radio Input	N/A	Radio Input	N/A	Radio Input	N/A	Radio Input	N/A	Radio Input	N/A	Radio Input	N/A	Radio Input	N/A	Radio Input	N/A
Hard Wire Input	1- Cart Presence	Hard Wire Input	N/A	Hard Wire Input	N/A	Hard Wire Input	N/A	Hard Wire Input	N/A	Hard Wire Input	N/A	Hard Wire Input	N/A	Hard Wire Input	N/A
BIT	N/A	BIT	N/A	BIT	N/A	BIT	N/A	BIT	N/A	BIT	N/A	BIT	N/A	BIT	N/A
STEP ACTION		**STEP ACTION**		**STEP ACTION**		**STEP ACTION**		**STEP ACTION**		**STEP ACTION**		**STEP ACTION**		**STEP ACTION**	
Function	Delay	Function	Forward	Function	Rotate	Function	Forward	Function	Rotate	Function	Forward	Function	Rotate	Function	Forward
Speed	N/A	Speed	33	Speed	33	Speed	33	Speed	33	Speed	33	Speed	33	Speed	33
Navigation	DR	Navigation	DR	Navigation	DR	Navigation	DR	Navigation	DR	Navigation	DR	Navigation	DR	Navigation	DR
Direction	N/A	Direction	Center	Direction	N/A	Direction	Center	Direction	Center	Direction	Center	Direction	Center	Direction	Center
Size	3	Size	84	Size	90	Size	120	Size	-90	Size	248	Size	-90	Size	525
Loss Of Guidance	N/A	Loss Of Guidance	N/A	Loss Of Guidance	N/A	Loss Of Guidance	N/A	Loss Of Guidance	N/A	Loss Of Guidance	N/A	Loss Of Guidance	N/A	Loss Of Guidance	N/A
Obstacle Avoidance	1	Obstacle Avoidance	1	Obstacle Avoidance	1	Obstacle Avoidance	1	Obstacle Avoidance	1	Obstacle Avoidance	1	Obstacle Avoidance	1	Obstacle Avoidance	1
Output	#6- Pin Up	Output	#6- Pin Up	Output	#6- Pin Up	Output	#6- Pin Up	Output	#6- Pin Up	Output	#6- Pin Up	Output	#6- Pin Up	Output	#6- Pin Up
END OF STEP		**END OF STEP**		**END OF STEP**		**END OF STEP**		**END OF STEP**		**END OF STEP**		**END OF STEP**		**END OF STEP**	
END MODE	Time	END MODE	Distance	END MODE	Distance	END MODE	Distance	END MODE	Distance	END MODE	Distance	END MODE	Distance	END MODE	Distance
END ACTION	Merge	END ACTION	Merge	END ACTION	Merge	END ACTION	Merge	END ACTION	Merge	END ACTION	Merge	END ACTION	Merge	END ACTION	Merge
NEXT ROUTE	1	NEXT ROUTE	1	NEXT ROUTE	1	NEXT ROUTE	1	NEXT ROUTE	1	NEXT ROUTE	1	NEXT ROUTE	1	NEXT ROUTE	1
NEXT STEP	10	NEXT STEP	11	NEXT STEP	12	NEXT STEP	13	NEXT STEP	14	NEXT STEP	15	NEXT STEP	16	NEXT STEP	17

Route 1		Route 1		Route 1		Route 1		Route 1		Route 1		Route 1		Route 1	
Route	1	Route	1	Route	1	Route	1	Route	1	Route	1	Route	1	Route	1
Step	17	Step	18	Step	19	Step	20	Step	21	Step	22	Step	23	Step	24
STEP INITIATION		**STEP INITIATION**		**STEP INITIATION**		**STEP INITIATION**		**STEP INITIATION**		**STEP INITIATION**		**STEP INITIATION**		**STEP INITIATION**	
Go Mode	Auto	Go Mode	Auto	Go Mode	Auto	Go Mode	Auto	Go Mode	Auto	Go Mode	Auto	Go Mode	Auto	Go Mode	Auto
Radio Input	N/A	Radio Input	N/A	Radio Input	N/A	Radio Input	N/A	Radio Input	N/A	Radio Input	N/A	Radio Input	N/A	Radio Input	N/A
Hard Wire Input	N/A	Hard Wire Input	N/A	Hard Wire Input	N/A	Hard Wire Input	N/A	Hard Wire Input	N/A	Hard Wire Input	N/A	Hard Wire Input	N/A	Hard Wire Input	N/A
BIT	N/A	BIT	N/A	BIT	N/A	BIT	N/A	BIT	N/A	BIT	N/A	BIT	N/A	BIT	N/A
STEP ACTION		**STEP ACTION**		**STEP ACTION**		**STEP ACTION**		**STEP ACTION**		**STEP ACTION**		**STEP ACTION**		**STEP ACTION**	
Function	Rotate	Function	Forward	Function	Rotate	Function	Froward	Function	Rotate	Function	Forward	Function	Rotate	Function	Forward
Speed	33	Speed	33	Speed	33	Speed	33	Speed	33	Speed	33	Speed	33	Speed	33
Navigation	DR	Navigation	DR	Navigation	DR	Navigation	DR	Navigation	DR	Navigation	DR	Navigation	DR	Navigation	DR
Direction	Center	Direction	Center	Direction	Center	Direction	Center	Direction	Center	Direction	Center	Direction	Center	Direction	Center
Size	90	Size	962	Size	-90	Size	2284	Size	90	Size	1164	Size	90	Size	1665
Loss Of Guidance	N/A	Loss Of Guidance	N/A	Loss Of Guidance	N/A	Loss Of Guidance	N/A	Loss Of Guidance	N/A	Loss Of Guidance	N/A	Loss Of Guidance	N/A	Loss Of Guidance	N/A
Obstacle Avoidance	1	Obstacle Avoidance	1	Obstacle Avoidance	1	Obstacle Avoidance	1	Obstacle Avoidance	1	Obstacle Avoidance	1	Obstacle Avoidance	1	Obstacle Avoidance	1
Output	#6- Pin Up	Output	#6- Pin Up	Output	#6- Pin Up	Output	#6- Pin Up	Output	#6- Pin Up	Output	#6- Pin Up	Output	#6- Pin Up	Output	#6- Pin Up
END OF STEP		**END OF STEP**		**END OF STEP**		**END OF STEP**		**END OF STEP**		**END OF STEP**		**END OF STEP**		**END OF STEP**	
END MODE	Distance	END MODE	Distance	END MODE	Distance	END MODE	Distance	END MODE	Distance	END MODE	Distance	END MODE	Distance	END MODE	Distance
END ACTION	Merge	END ACTION	Merge	END ACTION	Merge	END ACTION	Merge	END ACTION	Merge	END ACTION	Merge	END ACTION	Merge	END ACTION	Merge
NEXT ROUTE	1	NEXT ROUTE	1	NEXT ROUTE	1	NEXT ROUTE	1	NEXT ROUTE	1	NEXT ROUTE	1	NEXT ROUTE	1	NEXT ROUTE	1
NEXT STEP	18	NEXT STEP	19	NEXT STEP	20	NEXT STEP	21	NEXT STEP	22	NEXT STEP	23	NEXT STEP	24	NEXT STEP	25

Route 1		Route 1		Route 1		Route 1		Route 1		Route 1		Route 1		Route 1	
Route	1	Route	1	Route	1	Route	1	Route	1	Route	1	Route	1	Route	1
Step	25	Step	26	Step	27	Step	28	Step	29	Step	30	Step	31	Step	32
STEP INITIATION		**STEP INITIATION**		**STEP INITIATION**		**STEP INITIATION**		**STEP INITIATION**		**STEP INITIATION**		**STEP INITIATION**		**STEP INITIATION**	
Go Mode	Auto	Go Mode	Auto	Go Mode	Auto	Go Mode	Auto	Go Mode	Auto	Go Mode	Auto	Go Mode	Auto	Go Mode	Auto
Radio Input	N/A	Radio Input	N/A	Radio Input	N/A	Radio Input	N/A	Radio Input	N/A	Radio Input	N/A	Radio Input	N/A	Radio Input	N/A
Hard Wire Input	N/A	Hard Wire Input	N/A	Hard Wire Input	N/A	Hard Wire Input	N/A	Hard Wire Input	N/A	Hard Wire Input	N/A	Hard Wire Input	N/A	Hard Wire Input	N/A
BIT	N/A	BIT	N/A	BIT	N/A	BIT	N/A	BIT	N/A	BIT	N/A	BIT	N/A	BIT	N/A
STEP ACTION		**STEP ACTION**		**STEP ACTION**		**STEP ACTION**		**STEP ACTION**		**STEP ACTION**		**STEP ACTION**		**STEP ACTION**	
Function	Rotate	Function	Reverse	Function	Delay	Function	Forward	Function	Rotate	Function	Reverse	Function	Rotate	Function	Reverse
Speed	33	Speed	33	Speed	33	Speed	33	Speed	33	Speed	33	Speed	33	Speed	33
Navigation	DR	Navigation	DR	Navigation	DR	Navigation	DR	Navigation	DR	Navigation	DR	Navigation	DR	Navigation	DR
Direction	Center	Direction	Center	Direction	Center	Direction	Center	Direction	Center	Direction	Center	Direction	Center	Direction	Center
Size	90	Size	104	Size	5	Size	104	Size	90	Size	66	Size	-90	Size	186
Loss Of Guidance	N/A	Loss Of Guidance	N/A	Loss Of Guidance	N/A	Loss Of Guidance	N/A	Loss Of Guidance	N/A	Loss Of Guidance	N/A	Loss Of Guidance	N/A	Loss Of Guidance	N/A
Obstacle Avoidance	1	Obstacle Avoidance	1	Obstacle Avoidance	1	Obstacle Avoidance	1	Obstacle Avoidance	1	Obstacle Avoidance	1	Obstacle Avoidance	1	Obstacle Avoidance	1
Output	#6- Pin Up	Output	#6- Pin Up	Output	7- Pin Dow	Output	N/a	Output	N/a	Output	N/a	Output	N/a	Output	#6- pin up
END OF STEP		**END OF STEP**		**END OF STEP**		**END OF STEP**		**END OF STEP**		**END OF STEP**		**END OF STEP**		**END OF STEP**	
END MODE	Distance	END MODE	Distance	END MODE	Distance	END MODE	Distance	END MODE	Distance	END MODE	Distance	END MODE	Distance	END MODE	Distance
END ACTION	Merge	END ACTION	Merge	END ACTION	Merge	END ACTION	Merge	END ACTION	Merge	END ACTION	Merge	END ACTION	Merge	END ACTION	Merge
NEXT ROUTE	1	NEXT ROUTE	1	NEXT ROUTE	1	NEXT ROUTE	1	NEXT ROUTE	1	NEXT ROUTE	1	NEXT ROUTE	1	NEXT ROUTE	1
NEXT STEP	26	NEXT STEP	27	NEXT STEP	28	NEXT STEP	29	NEXT STEP	30	NEXT STEP	31	NEXT STEP	32	NEXT STEP	33

Route 1		Route 1		Route 1		Route 1		Route 1		Route 1		Route 1		Route 1	
Route	1	Route	1	Route	1	Route	1	Route	1	Route	1	Route	1	Route	1
Step	33	Step	34	Step	35	Step	36	Step	37	Step	38	Step	39	Step	40
STEP INITIATION		STEP INITIATION		STEP INITIATION		STEP INITIATION		STEP INITIATION		STEP INITIATION		STEP INITIATION		STEP INITIATION	
Go Mode	Auto	Go Mode	Auto	Go Mode	Auto	Go Mode	Auto	Go Mode	Auto	Go Mode	Auto	Go Mode	Auto	Go Mode	Auto
Radio Input	N/A	Radio Input	N/A	Radio Input	N/A	Radio Input	N/A	Radio Input	N/A	Radio Input	N/A	Radio Input	N/A	Radio Input	N/A
Hard Wire Input	Cart prese	Hard Wire Input	N/a	Hard Wire Input	N/a	Hard Wire Input	N/a	Hard Wire Input	N/a	Hard Wire Input	N/a	Hard Wire Input	N/a	Hard Wire Input	N/a
BIT	N/A	BIT	N/A	BIT	N/A	BIT	N/A	BIT	N/A	BIT	N/A	BIT	N/A	BIT	N/A
STEP ACTION		STEP ACTION		STEP ACTION		STEP ACTION		STEP ACTION		STEP ACTION		STEP ACTION		STEP ACTION	
Function	Forward	Function	Rotate	Function	Forward	Function	Rotate	Function	Reverse	Function	Delay	Function	Forward	Function	Rotate
Speed	33	Speed	33	Speed	33	Speed	33	Speed	33	Speed	33	Speed	33	Speed	33
Navigation	DR	Navigation	DR	Navigation	DR	Navigation	DR	Navigation	DR	Navigation	DR	Navigation	DR	Navigation	DR
Direction	Center	Direction	Center	Direction	Center	Direction	Center	Direction	Center	Direction	Center	Direction	Center	Direction	Center
Size	186	Size	90	Size	66	Size	-135	Size	87	Size	5	Size	87	Size	45
Loss Of Guidance	N/A	Loss Of Guidance	N/A	Loss Of Guidance	N/A	Loss Of Guidance	N/A	Loss Of Guidance	N/A	Loss Of Guidance	N/A	Loss Of Guidance	N/A	Loss Of Guidance	N/A
Obstacle Avoidance	1	Obstacle Avoidance	1	Obstacle Avoidance	1	Obstacle Avoidance	1	Obstacle Avoidance	1	Obstacle Avoidance	1	Obstacle Avoidance	1	Obstacle Avoidance	1
Output	#6- pin up	Output	#6- pin up	Output	#6- pin up	Output	#6- pin up	Output	#6- pin up	Output	7-Pin Dow	Output	N/A	Output	N/A
END OF STEP		END OF STEP		END OF STEP		END OF STEP		END OF STEP		END OF STEP		END OF STEP		END OF STEP	
END MODE	Distance	END MODE	Distance	END MODE	Distance	END MODE	Distance	END MODE	Distance	END MODE	Time	END MODE	Distance	END MODE	Distance
END ACTION	Merge	END ACTION	Merge	END ACTION	Merge	END ACTION	Merge	END ACTION	Merge	END ACTION	Merge	END ACTION	Merge	END ACTION	Merge
NEXT ROUTE	1	NEXT ROUTE	1	NEXT ROUTE	1	NEXT ROUTE	1	NEXT ROUTE	1	NEXT ROUTE	1	NEXT ROUTE	1	NEXT ROUTE	1
NEXT STEP	34	NEXT STEP	35	NEXT STEP	36	NEXT STEP	37	NEXT STEP	38	NEXT STEP	39	NEXT STEP	40	NEXT STEP	41

Route 1		Route 1		Route 1		Route 1		Route 1		Route 1		Route 1		Route 1	
Route	1	Route	1	Route	1	Route	1	Route	1	Route	1	Route	1	Route	1
Step	41	Step	42	Step	43	Step	44	Step	45	Step	46	Step	47	Step	48
STEP INITIATION		STEP INITIATION		STEP INITIATION		STEP INITIATION		STEP INITIATION		STEP INITIATION		STEP INITIATION		STEP INITIATION	
Go Mode	Auto	Go Mode	Auto	Go Mode	Auto	Go Mode	Auto	Go Mode	Auto	Go Mode	Auto	Go Mode	Auto	Go Mode	Auto
Radio Input	N/A	Radio Input	N/A	Radio Input	N/A	Radio Input	N/A	Radio Input	N/A	Radio Input	N/A	Radio Input	N/A	Radio Input	N/A
Hard Wire Input	N/a	Hard Wire Input	Cart Prese	Hard Wire Input	N/A	Hard Wire Input	N/A	Hard Wire Input	N/A	Hard Wire Input	N/A	Hard Wire Input	N/A	Hard Wire Input	N/A
BIT	N/A	BIT	N/A	BIT	N/A	BIT	N/A	BIT	N/A	BIT	N/A	BIT	N/A	BIT	N/A
STEP ACTION		STEP ACTION		STEP ACTION		STEP ACTION		STEP ACTION		STEP ACTION		STEP ACTION		STEP ACTION	
Function	Reverse	Function	Forward	Function	Rotate	Function	Reverse	Function	Rotate	Function	Reverse	Function	Delay	Function	Forward
Speed	33	Speed	33	Speed	33	Speed	33	Speed	33	Speed	33	Speed	33	Speed	33
Navigation	DR	Navigation	DR	Navigation	DR	Navigation	DR	Navigation	DR	Navigation	DR	Navigation	DR	Navigation	DR
Direction	Center	Direction	Center	Direction	Center	Direction	Center	Direction	Center	Direction	Center	Direction	Center	Direction	Center
Size	104	Size	104	Size	90	Size	66	Size	-90	Size	186	Size	5	Size	186
Loss Of Guidance	N/A	Loss Of Guidance	N/A	Loss Of Guidance	N/A	Loss Of Guidance	N/A	Loss Of Guidance	N/A	Loss Of Guidance	N/A	Loss Of Guidance	N/A	Loss Of Guidance	N/A
Obstacle Avoidance	1	Obstacle Avoidance	1	Obstacle Avoidance	1	Obstacle Avoidance	1	Obstacle Avoidance	1	Obstacle Avoidance	1	Obstacle Avoidance	1	Obstacle Avoidance	1
Output	#6-Pin Up	Output	#6-Pin Up	Output	#6-Pin Up	Output	#6-Pin Up	Output	#6-Pin Up	Output	#6-Pin Up	Output	7-Pin Dow	Output	N/A
END OF STEP		END OF STEP		END OF STEP		END OF STEP		END OF STEP		END OF STEP		END OF STEP		END OF STEP	
END MODE	Distance	END MODE	Distance	END MODE	Distance	END MODE	Distance	END MODE	Distance	END MODE	Distance	END MODE	Time	END MODE	Distance
END ACTION	Merge	END ACTION	Merge	END ACTION	Merge	END ACTION	Merge	END ACTION	Merge	END ACTION	Merge	END ACTION	Merge	END ACTION	Merge
NEXT ROUTE	1	NEXT ROUTE	1	NEXT ROUTE	1	NEXT ROUTE	1	NEXT ROUTE	1	NEXT ROUTE	1	NEXT ROUTE	1	NEXT ROUTE	1
NEXT STEP	42	NEXT STEP	43	NEXT STEP	44	NEXT STEP	45	NEXT STEP	46	NEXT STEP	47	NEXT STEP	48	NEXT STEP	49

Route 1		Route 1		Route 1		Route 1		Route 1		Route 1		Route 1		Route 1	
Route	1	Route	1	Route	1	Route	1	Route	1	Route	1	Route	1	Route	1
Step	49	Step	50	Step	51	Step	52	Step	53	Step	54	Step	55	Step	56
STEP INITIATION		STEP INITIATION		STEP INITIATION		STEP INITIATION		STEP INITIATION		STEP INITIATION		STEP INITIATION		STEP INITIATION	
Go Mode	Auto	Go Mode	Auto	Go Mode	Auto	Go Mode	Auto	Go Mode	Auto	Go Mode	Auto	Go Mode	Auto	Go Mode	Auto
Radio Input	N/A	Radio Input	N/A	Radio Input	N/A	Radio Input	N/A	Radio Input	N/A	Radio Input	N/A	Radio Input	N/A	Radio Input	N/A
Hard Wire Input	N/A	Hard Wire Input	N/A	Hard Wire Input	N/A	Hard Wire Input	N/A	Hard Wire Input	Cart Prese	Hard Wire Input	N/a	Hard Wire Input	N/a	Hard Wire Input	N/a
BIT	N/A	BIT	N/A	BIT	N/A	BIT	N/A	BIT	N/A	BIT	N/A	BIT	N/A	BIT	N/A
STEP ACTION		STEP ACTION		STEP ACTION		STEP ACTION		STEP ACTION		STEP ACTION		STEP ACTION		STEP ACTION	
Function	Rotate	Function	Forward	Function	Rotate	Function	Reverse	Function	Forward	Function	Rotate	Function	Forward	Function	Rotate
Speed	33	Speed	33	Speed	33	Speed	33	Speed	33	Speed	33	Speed	33	Speed	33
Navigation	DR	Navigation	DR	Navigation	DR	Navigation	DR	Navigation	DR	Navigation	DR	Navigation	DR	Navigation	DR
Direction	Center	Direction	Center	Direction	Center	Direction	Center	Direction	Center	Direction	Center	Direction	Center	Direction	Center
Size	90	Size	66	Size	-135	Size	87	Size	87	Size	135	Size	1665	Size	-90
Loss Of Guidance	N/A	Loss Of Guidance	N/A	Loss Of Guidance	N/A	Loss Of Guidance	N/A	Loss Of Guidance	N/A	Loss Of Guidance	N/A	Loss Of Guidance	N/A	Loss Of Guidance	N/A
Obstacle Avoidance	1	Obstacle Avoidance	1	Obstacle Avoidance	1	Obstacle Avoidance	1	Obstacle Avoidance	1	Obstacle Avoidance	1	Obstacle Avoidance	1	Obstacle Avoidance	1
Output	N/A	Output	N/A	Output	N/A	Output	#6-Pin Up	Output	#6-Pin Up	Output	#6-Pin Up	Output	#6-Pin Up	Output	#6-Pin Up
END OF STEP		END OF STEP		END OF STEP		END OF STEP		END OF STEP		END OF STEP		END OF STEP		END OF STEP	
END MODE	Distance	END MODE	Distance	END MODE	Distance	END MODE	Distance	END MODE	Distance	END MODE	Distance	END MODE	Distance	END MODE	Distance
END ACTION	Merge	END ACTION	Merge	END ACTION	Merge	END ACTION	Merge	END ACTION	Merge	END ACTION	Merge	END ACTION	Merge	END ACTION	Merge
NEXT ROUTE	1	NEXT ROUTE	1	NEXT ROUTE	1	NEXT ROUTE	1	NEXT ROUTE	1	NEXT ROUTE	1	NEXT ROUTE	1	NEXT ROUTE	1
NEXT STEP	50	NEXT STEP	51	NEXT STEP	52	NEXT STEP	53	NEXT STEP	54	NEXT STEP	55	NEXT STEP	56	NEXT STEP	57

Route 1		Route 1		Route 1		Route 1		Route 1		Route 1		Route 1		Route 1	
Route	1	Route	1	Route	1	Route	1	Route	1	Route	1	Route	1	Route	1
Step	57	Step	58	Step	59	Step	60	Step	61	Step	62	Step	63	Step	64
STEP INITIATION		STEP INITIATION		STEP INITIATION		STEP INITIATION		STEP INITIATION		STEP INITIATION		STEP INITIATION		STEP INITIATION	
Go Mode	Auto	Go Mode	Auto	Go Mode	Auto	Go Mode	Auto	Go Mode	Auto	Go Mode	Auto	Go Mode	Auto	Go Mode	Auto
Radio Input	N/A	Radio Input	N/A	Radio Input	N/A	Radio Input	N/A	Radio Input	N/A	Radio Input	N/A	Radio Input	N/A	Radio Input	N/A
Hard Wire Input	N/a	Hard Wire Input	N/a	Hard Wire Input	N/a	Hard Wire Input	N/a	Hard Wire Input	N/a	Hard Wire Input	N/a	Hard Wire Input	N/a	Hard Wire Input	N/a
BIT	N/A	BIT	N/A	BIT	N/A	BIT	N/A	BIT	N/A	BIT	N/A	BIT	N/A	BIT	N/A
STEP ACTION		STEP ACTION		STEP ACTION		STEP ACTION		STEP ACTION		STEP ACTION		STEP ACTION		STEP ACTION	
Function	Forward	Function	Rotate	Function	Forward	Function	Rotate	Function	Forward	Function	Rotate	Function	Forward	Function	Rotate
Speed	33	Speed	33	Speed	33	Speed	33	Speed	33	Speed	33	Speed	33	Speed	33
Navigation	DR	Navigation	DR	Navigation	DR	Navigation	DR	Navigation	DR	Navigation	DR	Navigation	DR	Navigation	DR
Direction	Center	Direction	Center	Direction	Center	Direction	Center	Direction	Center	Direction	Center	Direction	Center	Direction	Center
Size	1164	Size	-90	Size	2284	Size	90	Size	962	Size	-90	Size	525	Size	90
Loss Of Guidance	N/A	Loss Of Guidance	N/A	Loss Of Guidance	N/A	Loss Of Guidance	N/A	Loss Of Guidance	N/A	Loss Of Guidance	N/A	Loss Of Guidance	N/A	Loss Of Guidance	N/A
Obstacle Avoidance	1	Obstacle Avoidance	1	Obstacle Avoidance	1	Obstacle Avoidance	1	Obstacle Avoidance	1	Obstacle Avoidance	1	Obstacle Avoidance	1	Obstacle Avoidance	1
Output	#6-Pin Up	Output	#6-Pin Up	Output	#6-Pin Up	Output	#6-Pin Up	Output	#6-Pin Up	Output	#6-Pin Up	Output	#6-Pin Up	Output	#6-Pin Up
END OF STEP		END OF STEP		END OF STEP		END OF STEP		END OF STEP		END OF STEP		END OF STEP		END OF STEP	
END MODE	Distance	END MODE	Distance	END MODE	Distance	END MODE	Distance	END MODE	Distance	END MODE	Distance	END MODE	Distance	END MODE	Distance
END ACTION	Merge	END ACTION	Merge	END ACTION	Merge	END ACTION	Merge	END ACTION	Merge	END ACTION	Merge	END ACTION	Merge	END ACTION	Merge
NEXT ROUTE	1	NEXT ROUTE	1	NEXT ROUTE	1	NEXT ROUTE	1	NEXT ROUTE	1	NEXT ROUTE	1	NEXT ROUTE	1	NEXT ROUTE	1
NEXT STEP	58	NEXT STEP	59	NEXT STEP	60	NEXT STEP	61	NEXT STEP	62	NEXT STEP	63	NEXT STEP	64	NEXT STEP	65

Route 1		Route 1		Route 1		Route 1		Route 1		Route 1		Route 1		Route 1	
Route	1	Route	1	Route	1	Route	1	Route	1	Route	1	Route	1	Route	1
Step	65	Step	66	Step	67	Step	68	Step	69	Step	70	Step	71	Step	72
STEP INITIATION		**STEP INITIATION**		**STEP INITIATION**		**STEP INITIATION**		**STEP INITIATION**		**STEP INITIATION**		**STEP INITIATION**		**STEP INITIATION**	
Go Mode	Auto	Go Mode	Auto	Go Mode	Auto	Go Mode	Auto	Go Mode	Auto	Go Mode	Auto	Go Mode	Auto	Go Mode	Auto
Radio Input	N/A	Radio Input	N/A	Radio Input	N/A	Radio Input	N/A	Radio Input	N/A	Radio Input	N/A	Radio Input	N/A	Radio Input	N/A
Hard Wire Input	N/a	Hard Wire Input	N/a	Hard Wire Input	N/a	Hard Wire Input	N/a	Hard Wire Input	N/a	Hard Wire Input	N/a	Hard Wire Input	N/a	Hard Wire Input	N/a
BIT	N/A	BIT	N/A	BIT	N/A	BIT	N/A	BIT	N/A	BIT	N/A	BIT	N/A	BIT	N/A
STEP ACTION		**STEP ACTION**		**STEP ACTION**		**STEP ACTION**		**STEP ACTION**		**STEP ACTION**		**STEP ACTION**		**STEP ACTION**	
Function	Forward	Function	Rotate	Function	Reverse	Function	Rotate	Function	Reverse	Function	Delay	Function	Forward	Function	Rotate
Speed	33	Speed	33	Speed	33	Speed	33	Speed	33	Speed	33	Speed	33	Speed	33
Navigation	DR	Navigation	DR	Navigation	DR	Navigation	DR	Navigation	DR	Navigation	DR	Navigation	DR	Navigation	DR
Direction	Center	Direction	Center	Direction	Center	Direction	Center	Direction	Center	Direction	Center	Direction	Center	Direction	Center
Size	248	Size	-90	Size	120	Size	-90	Size	84	Size	5	Size	84	Size	90
Loss Of Guidance	N/A	Loss Of Guidance	N/A	Loss Of Guidance	N/A	Loss Of Guidance	N/A	Loss Of Guidance	N/A	Loss Of Guidance	N/A	Loss Of Guidance	N/A	Loss Of Guidance	N/A
Obstacle Avoidance	1	Obstacle Avoidance	1	Obstacle Avoidance	1	Obstacle Avoidance	1	Obstacle Avoidance	1	Obstacle Avoidance	1	Obstacle Avoidance	1	Obstacle Avoidance	1
Output	#6-Pin Up	Output	#6-Pin Up	Output	#6-Pin Up	Output	#6-Pin Up	Output	#6-Pin Up	Output	7-Pin dowı	Output		Output	
END OF STEP		**END OF STEP**		**END OF STEP**		**END OF STEP**		**END OF STEP**		**END OF STEP**		**END OF STEP**		**END OF STEP**	
END MODE	Distance	END MODE	Distance	END MODE	Distance	END MODE	Distance	END MODE	Distance	END MODE	Distance	END MODE	Distance	END MODE	Distance
END ACTION	Merge	END ACTION	Merge	END ACTION	Merge	END ACTION	Merge	END ACTION	Merge	END ACTION	Merge	END ACTION	Merge	END ACTION	Merge
NEXT ROUTE	1	NEXT ROUTE	1	NEXT ROUTE	1	NEXT ROUTE	1	NEXT ROUTE	1	NEXT ROUTE	1	NEXT ROUTE	1	NEXT ROUTE	1
NEXT STEP	66	NEXT STEP	67	NEXT STEP	68	NEXT STEP	69	NEXT STEP	70	NEXT STEP	71	NEXT STEP	72	NEXT STEP	73

Route 1		Route 1		Route 1		Route 1		Route 1		Route 0: 1	
Route	1	Route	1	Route	1	Route	1	Route	1	**STEP INITIATION**	
Step	73	Step	74	Step	75	Step	76	Step	77	**Go Mode**	nput Trigge
STEP INITIATION		**STEP INITIATION**		**STEP INITIATION**		**STEP INITIATION**		**STEP INITIATION**		**Radio Input**	dio Input 1-
Go Mode	Auto	Go Mode	Auto	Go Mode	Auto	Go Mode	Auto	Go Mode	Auto	**Hard Wire Input**	N/a
Radio Input	N/A	Radio Input	N/A	Radio Input	N/A	Radio Input	N/A	Radio Input	N/A	**BIT**	BIT #1-#24
Hard Wire Input	N/a	Hard Wire Input	N/a	Hard Wire Input	N/a	Hard Wire Input	N/a	Hard Wire Input	N/a		
BIT	N/A	BIT	N/A	BIT	N/A	BIT	N/A	BIT	N/A		
STEP ACTION		**STEP ACTION**		**STEP ACTION**		**STEP ACTION**		**STEP ACTION**		**STEP ACTION**	
Function	Forward	Function	Rotate	Function	Reverse	Function	Rotate	Function	Reverse	**Function**	Auto
Speed	33	Speed	33	Speed	33	Speed	33	Speed	33	**Speed**	33
Navigation	DR	Navigation	DR	Navigation	DR	Navigation	DR	Navigation	DR	**Navigation**	DR
Direction	Center	Direction	Center	Direction	Center	Direction	Center	Direction	Center	**Direction**	Center
Size	120	Size	-90	Size	168	Size	90	Size	66	**Size**	66
Loss Of Guidance	N/A	Loss Of Guidance	N/A	Loss Of Guidance	N/A	Loss Of Guidance	N/A	Loss Of Guidance	N/A	**Loss Of Guidance**	N/A
Obstacle Avoidance	1	Obstacle Avoidance	1	Obstacle Avoidance	1	Obstacle Avoidance	1	Obstacle Avoidance	1	**Obstacle Avoidance**	1
Output		Output		Output		Output		Output		**Output**	N/a
END OF STEP		**END OF STEP**		**END OF STEP**		**END OF STEP**		**END OF STEP**		**END OF STEP**	
END MODE	Distance	END MODE	Distance	END MODE	Distance	END MODE	Distance	END MODE	Distance	**END MODE**	Distance
END ACTION	Merge	END ACTION	Merge	END ACTION	Merge	END ACTION	Merge	END ACTION	rge Bit #2	**END ACTION**	Merge
NEXT ROUTE	1	NEXT ROUTE	1	NEXT ROUTE	1	NEXT ROUTE	1	NEXT ROUTE	0	**NEXT ROUTE**	0
NEXT STEP	74	NEXT STEP	75	NEXT STEP	76	NEXT STEP	77	NEXT STEP	1	**NEXT STEP**	1

Tier 3 Route 2

Route 2		Route 2		Route 2		Route 2		Route 2		Route 2		Route 2		Route 2	
Route	2	Route	2	Route	2	Route	2	Route	2	Route	2	Route	2	Route	2
Step	1	Step	2	Step	3	Step	4	Step	5	Step	6	Step	7	Step	8
STEP INITIATION		**STEP INITIATION**		**STEP INITIATION**		**STEP INITIATION**		**STEP INITIATION**		**STEP INITIATION**		**STEP INITIATION**		**STEP INITIATION**	
Go Mode	Input Triggers	Go Mode	Auto	Go Mode	Auto	Go Mode	Auto	Go Mode	Auto	Go Mode	Auto	Go Mode	Auto	Go Mode	Auto
Radio Input	Radio #1 "Ford"	Radio Input	N/A	Radio Input	N/A	Radio Input	N/A	Radio Input	N/A	Radio Input	N/A	Radio Input	N/A	Radio Input	N/A
Home RFID	Radio #2 "Bin Full"														
Hard Wire Input	N/A	Hard Wire Input	N/A	Hard Wire Input	N/A	Hard Wire Input	N/A	Hard Wire Input	N/A	Hard Wire Input	N/A	Hard Wire Input	N/A	Hard Wire Input	N/A
BIT	Bit #1 On Bit #3 On	BIT	N/A	BIT	N/A	BIT	N/A	BIT	N/A	BIT	N/A	BIT	N/A	BIT	N/A
STEP ACTION		**STEP ACTION**		**STEP ACTION**		**STEP ACTION**		**STEP ACTION**		**STEP ACTION**		**STEP ACTION**		**STEP ACTION**	
Function	Dispatch	Function	Forward	Function	Rotate	Function	Forward	Function	Rotate	Function	Reverse	Function	Rotate	Function	Reverse
Speed	N/A	Speed	33	Speed	33	Speed	33	Speed	33	Speed	33	Speed	33	Speed	33
Navigation	N/A	Navigation	DR	Navigation	DR	Navigation	DR	Navigation	DR	Navigation	DR	Navigation	DR	Navigation	DR
Direction	N/A	Direction	Center	Direction	N/A	Direction	Center	Direction	N/A	Direction	Center	Direction	N/A	Direction	Center
Size	N/A	Size	66	Size	-90	Size	168	Size	90	Size	57	Size	-90	Size	84
Loss Of Guidance	N/A	Loss Of Guidance	N/A	Loss Of Guidance	N/A	Loss Of Guidance	N/A	Loss Of Guidance	N/A	Loss Of Guidance	N/A	Loss Of Guidance	N/A	Loss Of Guidance	N/A
Obstacle Avoidance	N/A	Obstacle Avoidance	1	Obstacle Avoidance	1	Obstacle Avoidance	1	Obstacle Avoidance	1	Obstacle Avoidance	1	Obstacle Avoidance	1	Obstacle Avoidance	1
Output	N/A	Output	N/A	Output	N/A	Output	N/A	Output	N/A	Output	N/A	Output	N/A	Output	#6- Pin Up
END OF STEP		**END OF STEP**		**END OF STEP**		**END OF STEP**		**END OF STEP**		**END OF STEP**		**END OF STEP**		**END OF STEP**	
END MODE	N/A	END MODE	Distance	END MODE	Distance	END MODE	Distance	END MODE	Distance	END MODE	Distance	END MODE	Distance	END MODE	Distance
END ACTION	Merge Bit #1 off	END ACTION	Merge	END ACTION	Merge	END ACTION	Merge	END ACTION	Merge	END ACTION	Merge	END ACTION	Merge	END ACTION	Merge
NEXT ROUTE	2	NEXT ROUTE	2	NEXT ROUTE	2	NEXT ROUTE	2	NEXT ROUTE	2	NEXT ROUTE	2	NEXT ROUTE	2	NEXT ROUTE	2
NEXT STEP	2	NEXT STEP	3	NEXT STEP	4	NEXT STEP	5	NEXT STEP	6	NEXT STEP	7	NEXT STEP	8	NEXT STEP	9

Route 2		Route 2		Route 2		Route 2		Route 2		Route 2		Route 2		Route 2	
Route	2	Route	2	Route	2	Route	2	Route	2	Route	2	Route	2	Route	2
Step	9	Step	10	Step	11	Step	12	Step	13	Step	14	Step	15	Step	16
STEP INITIATION		**STEP INITIATION**		**STEP INITIATION**		**STEP INITIATION**		**STEP INITIATION**		**STEP INITIATION**		**STEP INITIATION**		**STEP INITIATION**	
Go Mode	Input Triggers	Go Mode	Auto	Go Mode	Auto	Go Mode	Auto	Go Mode	Auto	Go Mode	Auto	Go Mode	Auto	Go Mode	Auto
Radio Input	N/A	Radio Input	N/A	Radio Input	N/A	Radio Input	N/A	Radio Input	N/A	Radio Input	N/A	Radio Input	N/A	Radio Input	N/A
Hard Wire Input	1- Cart Presence	Hard Wire Input	N/A	Hard Wire Input	N/A	Hard Wire Input	N/A	Hard Wire Input	N/A	Hard Wire Input	N/A	Hard Wire Input	N/A	Hard Wire Input	N/A
BIT	N/A	BIT	N/A	BIT	N/A	BIT	N/A	BIT	N/A	BIT	N/A	BIT	N/A	BIT	N/A
STEP ACTION		**STEP ACTION**		**STEP ACTION**		**STEP ACTION**		**STEP ACTION**		**STEP ACTION**		**STEP ACTION**		**STEP ACTION**	
Function	Delay	Function	Forward	Function	Rotate	Function	Forward	Function	Rotate	Function	Forward	Function	Rotate	Function	Forward
Speed	N/A	Speed	33	Speed	33	Speed	33	Speed	33	Speed	33	Speed	33	Speed	33
Navigation	DR	Navigation	DR	Navigation	DR	Navigation	DR	Navigation	DR	Navigation	DR	Navigation	DR	Navigation	DR
Direction	N/A	Direction	Center	Direction	N/A	Direction	Center	Direction	Center	Direction	Center	Direction	Center	Direction	Center
Size	3	Size	84	Size	90	Size	57	Size	-90	Size	248	Size	-90	Size	525
Loss Of Guidance	N/A	Loss Of Guidance	N/A	Loss Of Guidance	N/A	Loss Of Guidance	N/A	Loss Of Guidance	N/A	Loss Of Guidance	N/A	Loss Of Guidance	N/A	Loss Of Guidance	N/A
Obstacle Avoidance	1	Obstacle Avoidance	1	Obstacle Avoidance	1	Obstacle Avoidance	1	Obstacle Avoidance	1	Obstacle Avoidance	1	Obstacle Avoidance	1	Obstacle Avoidance	1
Output	#6- Pin Up	Output	#6- Pin Up	Output	#6- Pin Up	Output	#6- Pin Up	Output	#6- Pin Up	Output	#6- Pin Up	Output	#6- Pin Up	Output	#6- Pin Up
END OF STEP		**END OF STEP**		**END OF STEP**		**END OF STEP**		**END OF STEP**		**END OF STEP**		**END OF STEP**		**END OF STEP**	
END MODE	Time	END MODE	Distance	END MODE	Distance	END MODE	Distance	END MODE	Distance	END MODE	Distance	END MODE	Distance	END MODE	Distance
END ACTION	Merge	END ACTION	Merge	END ACTION	Merge	END ACTION	Merge	END ACTION	Merge	END ACTION	Merge	END ACTION	Merge	END ACTION	Merge
NEXT ROUTE	2	NEXT ROUTE	2	NEXT ROUTE	2	NEXT ROUTE	2	NEXT ROUTE	2	NEXT ROUTE	2	NEXT ROUTE	2	NEXT ROUTE	2
NEXT STEP	10	NEXT STEP	11	NEXT STEP	12	NEXT STEP	13	NEXT STEP	14	NEXT STEP	15	NEXT STEP	16	NEXT STEP	17

Route 2		Route 2		Route 2		Route 2		Route 2		Route 2		Route 2		Route 2	
Route	2	Route	2	Route	2	Route	2	Route	2	Route	2	Route	2	Route	2
Step	17	Step	18	Step	19	Step	20	Step	21	Step	22	Step	23	Step	24
STEP INITIATION		**STEP INITIATION**		**STEP INITIATION**		**STEP INITIATION**		**STEP INITIATION**		**STEP INITIATION**		**STEP INITIATION**		**STEP INITIATION**	
Go Mode	Auto	Go Mode	Auto	Go Mode	Auto	Go Mode	Auto	Go Mode	Auto	Go Mode	Auto	Go Mode	Auto	Go Mode	Auto
Radio Input	N/A	Radio Input	N/A	Radio Input	N/A	Radio Input	N/A	Radio Input	N/A	Radio Input	N/A	Radio Input	N/A	Radio Input	N/A
Hard Wire Input	N/A	Hard Wire Input	N/A	Hard Wire Input	N/A	Hard Wire Input	N/A	Hard Wire Input	N/A	Hard Wire Input	N/A	Hard Wire Input	N/A	Hard Wire Input	N/A
BIT	N/A	BIT	N/A	BIT	N/A	BIT	N/A	BIT	N/A	BIT	N/A	BIT	N/A	BIT	N/A
STEP ACTION		**STEP ACTION**		**STEP ACTION**		**STEP ACTION**		**STEP ACTION**		**STEP ACTION**		**STEP ACTION**		**STEP ACTION**	
Function	Rotate	Function	Forward	Function	Rotate	Function	Froward	Function	Rotate	Function	Forward	Function	Rotate	Function	Forward
Speed	33	Speed	33	Speed	33	Speed	33	Speed	33	Speed	33	Speed	33	Speed	33
Navigation	DR	Navigation	DR	Navigation	DR	Navigation	DR	Navigation	DR	Navigation	DR	Navigation	DR	Navigation	DR
Direction	Center	Direction	Center	Direction	Center	Direction	Center	Direction	Center	Direction	Center	Direction	Center	Direction	Center
Size	90	Size	962	Size	-90	Size	2284	Size	90	Size	1164	Size	90	Size	1665
Loss Of Guidance	N/A	Loss Of Guidance	N/A	Loss Of Guidance	N/A	Loss Of Guidance	N/A	Loss Of Guidance	N/A	Loss Of Guidance	N/A	Loss Of Guidance	N/A	Loss Of Guidance	N/A
Obstacle Avoidance	1	Obstacle Avoidance	1	Obstacle Avoidance	1	Obstacle Avoidance	1	Obstacle Avoidance	1	Obstacle Avoidance	1	Obstacle Avoidance	1	Obstacle Avoidance	1
Output	#6- Pin Up	Output	#6- Pin Up	Output	#6- Pin Up	Output	#6- Pin Up	Output	#6- Pin Up	Output	#6- Pin Up	Output	#6- Pin Up	Output	#6- Pin Up
END OF STEP		**END OF STEP**		**END OF STEP**		**END OF STEP**		**END OF STEP**		**END OF STEP**		**END OF STEP**		**END OF STEP**	
END MODE	Distance	END MODE	Distance	END MODE	Distance	END MODE	Distance	END MODE	Distance	END MODE	Distance	END MODE	Distance	END MODE	Distance
END ACTION	Merge	END ACTION	Merge	END ACTION	Merge	END ACTION	Merge	END ACTION	Merge	END ACTION	Merge	END ACTION	Merge	END ACTION	Merge
NEXT ROUTE	2	NEXT ROUTE	2	NEXT ROUTE	2	NEXT ROUTE	2	NEXT ROUTE	2	NEXT ROUTE	2	NEXT ROUTE	2	NEXT ROUTE	2
NEXT STEP	18	NEXT STEP	19	NEXT STEP	20	NEXT STEP	21	NEXT STEP	22	NEXT STEP	23	NEXT STEP	24	NEXT STEP	25

Route 2		Route 2		Route 2		Route 2		Route 2		Route 2		Route 2		Route 2	
Route	2	Route	2	Route	2	Route	2	Route	2	Route	2	Route	2	Route	2
Step	25	Step	26	Step	27	Step	28	Step	29	Step	30	Step	31	Step	32
STEP INITIATION		**STEP INITIATION**		**STEP INITIATION**		**STEP INITIATION**		**STEP INITIATION**		**STEP INITIATION**		**STEP INITIATION**		**STEP INITIATION**	
Go Mode	Auto	Go Mode	Auto	Go Mode	Auto	Go Mode	Auto	Go Mode	Auto	Go Mode	Auto	Go Mode	Auto	Go Mode	Auto
Radio Input	N/A	Radio Input	N/A	Radio Input	N/A	Radio Input	N/A	Radio Input	N/A	Radio Input	N/A	Radio Input	N/A	Radio Input	N/A
Hard Wire Input	N/A	Hard Wire Input	N/A	Hard Wire Input	N/A	Hard Wire Input	N/A	Hard Wire Input	N/A	Hard Wire Input	N/A	Hard Wire Input	N/A	Hard Wire Input	N/A
BIT	N/A	BIT	N/A	BIT	N/A	BIT	N/A	BIT	N/A	BIT	N/A	BIT	N/A	BIT	N/A
STEP ACTION		**STEP ACTION**		**STEP ACTION**		**STEP ACTION**		**STEP ACTION**		**STEP ACTION**		**STEP ACTION**		**STEP ACTION**	
Function	Rotate	Function	Reverse	Function	Delay	Function	Forward	Function	Rotate	Function	Reverse	Function	Rotate	Function	Reverse
Speed	33	Speed	33	Speed	33	Speed	33	Speed	33	Speed	33	Speed	33	Speed	33
Navigation	DR	Navigation	DR	Navigation	DR	Navigation	DR	Navigation	DR	Navigation	DR	Navigation	DR	Navigation	DR
Direction	Center	Direction	Center	Direction	Center	Direction	Center	Direction	Center	Direction	Center	Direction	Center	Direction	Center
Size	90	Size	104	Size	5	Size	104	Size	90	Size	66	Size	-90	Size	186
Loss Of Guidance	N/A	Loss Of Guidance	N/A	Loss Of Guidance	N/A	Loss Of Guidance	N/A	Loss Of Guidance	N/A	Loss Of Guidance	N/A	Loss Of Guidance	N/A	Loss Of Guidance	N/A
Obstacle Avoidance	1	Obstacle Avoidance	1	Obstacle Avoidance	1	Obstacle Avoidance	1	Obstacle Avoidance	1	Obstacle Avoidance	1	Obstacle Avoidance	1	Obstacle Avoidance	1
Output	#6- Pin Up	Output	#6- Pin Up	Output	7- Pin Dow	Output	N/a	Output	N/a	Output	N/a	Output	N/a	Output	#6- pin up
END OF STEP		**END OF STEP**		**END OF STEP**		**END OF STEP**		**END OF STEP**		**END OF STEP**		**END OF STEP**		**END OF STEP**	
END MODE	Distance	END MODE	Distance	END MODE	Distance	END MODE	Distance	END MODE	Distance	END MODE	Distance	END MODE	Distance	END MODE	Distance
END ACTION	Merge	END ACTION	Merge	END ACTION	Merge	END ACTION	Merge	END ACTION	Merge	END ACTION	Merge	END ACTION	Merge	END ACTION	Merge
NEXT ROUTE	2	NEXT ROUTE	2	NEXT ROUTE	2	NEXT ROUTE	2	NEXT ROUTE	2	NEXT ROUTE	2	NEXT ROUTE	2	NEXT ROUTE	2
NEXT STEP	26	NEXT STEP	27	NEXT STEP	28	NEXT STEP	29	NEXT STEP	30	NEXT STEP	31	NEXT STEP	32	NEXT STEP	33

Route 2		Route 2		Route 2		Route 2		Route 2		Route 2		Route 2		Route 2	
Route	2	Route	2	Route	2	Route	2	Route	2	Route	2	Route	2	Route	2
Step	33	Step	34	Step	35	Step	36	Step	37	Step	38	Step	39	Step	40
STEP INITIATION		**STEP INITIATION**		**STEP INITIATION**		**STEP INITIATION**		**STEP INITIATION**		**STEP INITIATION**		**STEP INITIATION**		**STEP INITIATION**	
Go Mode	Auto	Go Mode	Auto	Go Mode	Auto	Go Mode	Auto	Go Mode	Auto	Go Mode	Auto	Go Mode	Auto	Go Mode	Auto
Radio Input	N/A	Radio Input	N/A	Radio Input	N/A	Radio Input	N/A	Radio Input	N/A	Radio Input	N/A	Radio Input	N/A	Radio Input	N/A
Hard Wire Input	Cart prese	Hard Wire Input	N/a	Hard Wire Input	N/a	Hard Wire Input	N/a	Hard Wire Input	N/a	Hard Wire Input	N/a	Hard Wire Input	N/a	Hard Wire Input	N/a
BIT	N/A	BIT	N/A	BIT	N/A	BIT	N/A	BIT	N/A	BIT	N/A	BIT	N/A	BIT	N/A
STEP ACTION		**STEP ACTION**		**STEP ACTION**		**STEP ACTION**		**STEP ACTION**		**STEP ACTION**		**STEP ACTION**		**STEP ACTION**	
Function	Forward	Function	Rotate	Function	Forward	Function	Rotate	Function	Reverse	Function	Delay	Function	Forward	Function	Rotate
Speed	33	Speed	33	Speed	33	Speed	33	Speed	33	Speed	33	Speed	33	Speed	33
Navigation	DR	Navigation	DR	Navigation	DR	Navigation	DR	Navigation	DR	Navigation	DR	Navigation	DR	Navigation	DR
Direction	Center	Direction	Center	Direction	Center	Direction	Center	Direction	Center	Direction	Center	Direction	Center	Direction	Center
Size	186	Size	90	Size	66	Size	-135	Size	87	Size	5	Size	87	Size	45
Loss Of Guidance	N/A	Loss Of Guidance	N/A	Loss Of Guidance	N/A	Loss Of Guidance	N/A	Loss Of Guidance	N/A	Loss Of Guidance	N/A	Loss Of Guidance	N/A	Loss Of Guidance	N/A
Obstacle Avoidance	1	Obstacle Avoidance	1	Obstacle Avoidance	1	Obstacle Avoidance	1	Obstacle Avoidance	1	Obstacle Avoidance	1	Obstacle Avoidance	1	Obstacle Avoidance	1
Output	#6- pin up	Output	#6- pin up	Output	#6- pin up	Output	#6- pin up	Output	#6- pin up	Output	7-Pin Dow	Output	N/A	Output	N/A
END OF STEP		**END OF STEP**		**END OF STEP**		**END OF STEP**		**END OF STEP**		**END OF STEP**		**END OF STEP**		**END OF STEP**	
END MODE	Distance	END MODE	Distance	END MODE	Distance	END MODE	Distance	END MODE	Distance	END MODE	Time	END MODE	Distance	END MODE	Distance
END ACTION	Merge	END ACTION	Merge	END ACTION	Merge	END ACTION	Merge	END ACTION	Merge	END ACTION	Merge	END ACTION	Merge	END ACTION	Merge
NEXT ROUTE	2	NEXT ROUTE	2	NEXT ROUTE	2	NEXT ROUTE	2	NEXT ROUTE	2	NEXT ROUTE	2	NEXT ROUTE	2	NEXT ROUTE	2
NEXT STEP	34	NEXT STEP	35	NEXT STEP	36	NEXT STEP	37	NEXT STEP	38	NEXT STEP	39	NEXT STEP	40	NEXT STEP	41

Route 2		Route 2		Route 2		Route 2		Route 2		Route 2		Route 2		Route 2	
Route	2	Route	2	Route	2	Route	2	Route	2	Route	2	Route	2	Route	2
Step	41	Step	42	Step	43	Step	44	Step	45	Step	46	Step	47	Step	48
STEP INITIATION		**STEP INITIATION**		**STEP INITIATION**		**STEP INITIATION**		**STEP INITIATION**		**STEP INITIATION**		**STEP INITIATION**		**STEP INITIATION**	
Go Mode	Auto	Go Mode	Auto	Go Mode	Auto	Go Mode	Auto	Go Mode	Auto	Go Mode	Auto	Go Mode	Auto	Go Mode	Auto
Radio Input	N/A	Radio Input	N/A	Radio Input	N/A	Radio Input	N/A	Radio Input	N/A	Radio Input	N/A	Radio Input	N/A	Radio Input	N/A
Hard Wire Input	N/a	Hard Wire Input	Cart Prese	Hard Wire Input	N/A	Hard Wire Input	N/A	Hard Wire Input	N/A	Hard Wire Input	N/A	Hard Wire Input	N/A	Hard Wire Input	N/A
BIT	N/A	BIT	N/A	BIT	N/A	BIT	N/A	BIT	N/A	BIT	N/A	BIT	N/A	BIT	N/A
STEP ACTION		**STEP ACTION**		**STEP ACTION**		**STEP ACTION**		**STEP ACTION**		**STEP ACTION**		**STEP ACTION**		**STEP ACTION**	
Function	Reverse	Function	Forward	Function	Rotate	Function	Reverse	Function	Rotate	Function	Reverse	Function	Delay	Function	Forward
Speed	33	Speed	33	Speed	33	Speed	33	Speed	33	Speed	33	Speed	33	Speed	33
Navigation	DR	Navigation	DR	Navigation	DR	Navigation	DR	Navigation	DR	Navigation	DR	Navigation	DR	Navigation	DR
Direction	Center	Direction	Center	Direction	Center	Direction	Center	Direction	Center	Direction	Center	Direction	Center	Direction	Center
Size	104	Size	104	Size	90	Size	66	Size	-90	Size	186	Size	5	Size	186
Loss Of Guidance	N/A	Loss Of Guidance	N/A	Loss Of Guidance	N/A	Loss Of Guidance	N/A	Loss Of Guidance	N/A	Loss Of Guidance	N/A	Loss Of Guidance	N/A	Loss Of Guidance	N/A
Obstacle Avoidance	1	Obstacle Avoidance	1	Obstacle Avoidance	1	Obstacle Avoidance	1	Obstacle Avoidance	1	Obstacle Avoidance	1	Obstacle Avoidance	1	Obstacle Avoidance	1
Output	#6-Pin Up	Output	#6-Pin Up	Output	#6-Pin Up	Output	#6-Pin Up	Output	#6-Pin Up	Output	#6-Pin Up	Output	7-Pin Dow	Output	N/A
END OF STEP		**END OF STEP**		**END OF STEP**		**END OF STEP**		**END OF STEP**		**END OF STEP**		**END OF STEP**		**END OF STEP**	
END MODE	Distance	END MODE	Distance	END MODE	Distance	END MODE	Distance	END MODE	Distance	END MODE	Distance	END MODE	Time	END MODE	Distance
END ACTION	Merge	END ACTION	Merge	END ACTION	Merge	END ACTION	Merge	END ACTION	Merge	END ACTION	Merge	END ACTION	Merge	END ACTION	Merge
NEXT ROUTE	2	NEXT ROUTE	2	NEXT ROUTE	2	NEXT ROUTE	2	NEXT ROUTE	2	NEXT ROUTE	2	NEXT ROUTE	2	NEXT ROUTE	2
NEXT STEP	42	NEXT STEP	43	NEXT STEP	44	NEXT STEP	45	NEXT STEP	46	NEXT STEP	47	NEXT STEP	48	NEXT STEP	49

Route 2		Route 2		Route 2		Route 2		Route 2		Route 2		Route 2		Route 2	
Route	2	Route	2	Route	2	Route	2	Route	2	Route	2	Route	2	Route	2
Step	49	Step	50	Step	51	Step	52	Step	53	Step	54	Step	55	Step	56
STEP INITIATION		**STEP INITIATION**		**STEP INITIATION**		**STEP INITIATION**		**STEP INITIATION**		**STEP INITIATION**		**STEP INITIATION**		**STEP INITIATION**	
Go Mode	Auto	Go Mode	Auto	Go Mode	Auto	Go Mode	Auto	Go Mode	Auto	Go Mode	Auto	Go Mode	Auto	Go Mode	Auto
Radio Input	N/A	Radio Input	N/A	Radio Input	N/A	Radio Input	N/A	Radio Input	N/A	Radio Input	N/A	Radio Input	N/A	Radio Input	N/A
Hard Wire Input	N/A	Hard Wire Input	N/A	Hard Wire Input	N/A	Hard Wire Input	N/A	Hard Wire Input	Cart Prese	Hard Wire Input	N/a	Hard Wire Input	N/a	Hard Wire Input	N/a
BIT	N/A	BIT	N/A	BIT	N/A	BIT	N/A	BIT	N/A	BIT	N/A	BIT	N/A	BIT	N/A
STEP ACTION		**STEP ACTION**		**STEP ACTION**		**STEP ACTION**		**STEP ACTION**		**STEP ACTION**		**STEP ACTION**		**STEP ACTION**	
Function	Rotate	Function	Forward	Function	Rotate	Function	Reverse	Function	Forward	Function	Rotate	Function	Forward	Function	Rotate
Speed	33	Speed	33	Speed	33	Speed	33	Speed	33	Speed	33	Speed	33	Speed	33
Navigation	DR	Navigation	DR	Navigation	DR	Navigation	DR	Navigation	DR	Navigation	DR	Navigation	DR	Navigation	DR
Direction	Center	Direction	Center	Direction	Center	Direction	Center	Direction	Center	Direction	Center	Direction	Center	Direction	Center
Size	90	Size	66	Size	-135	Size	87	Size	87	Size	135	Size	1665	Size	-90
Loss Of Guidance	N/A	Loss Of Guidance	N/A	Loss Of Guidance	N/A	Loss Of Guidance	N/A	Loss Of Guidance	N/A	Loss Of Guidance	N/A	Loss Of Guidance	N/A	Loss Of Guidance	N/A
Obstacle Avoidance	1	Obstacle Avoidance	1	Obstacle Avoidance	1	Obstacle Avoidance	1	Obstacle Avoidance	1	Obstacle Avoidance	1	Obstacle Avoidance	1	Obstacle Avoidance	1
Output	N/A	Output	N/A	Output	N/A	Output	#6-Pin Up	Output	#6-Pin Up	Output	#6-Pin Up	Output	#6-Pin Up	Output	#6-Pin Up
END OF STEP		**END OF STEP**		**END OF STEP**		**END OF STEP**		**END OF STEP**		**END OF STEP**		**END OF STEP**		**END OF STEP**	
END MODE	Distance	END MODE	Distance	END MODE	Distance	END MODE	Distance	END MODE	Distance	END MODE	Distance	END MODE	Distance	END MODE	Distance
END ACTION	Merge	END ACTION	Merge	END ACTION	Merge	END ACTION	Merge	END ACTION	Merge	END ACTION	Merge	END ACTION	Merge	END ACTION	Merge
NEXT ROUTE	2	NEXT ROUTE	2	NEXT ROUTE	2	NEXT ROUTE	2	NEXT ROUTE	2	NEXT ROUTE	2	NEXT ROUTE	2	NEXT ROUTE	2
NEXT STEP	50	NEXT STEP	51	NEXT STEP	52	NEXT STEP	53	NEXT STEP	54	NEXT STEP	55	NEXT STEP	56	NEXT STEP	57

Route 2		Route 2		Route 2		Route 2		Route 2		Route 2		Route 2		Route 2	
Route	2	Route	2	Route	2	Route	2	Route	2	Route	2	Route	2	Route	2
Step	57	Step	58	Step	59	Step	60	Step	61	Step	62	Step	63	Step	64
STEP INITIATION		**STEP INITIATION**		**STEP INITIATION**		**STEP INITIATION**		**STEP INITIATION**		**STEP INITIATION**		**STEP INITIATION**		**STEP INITIATION**	
Go Mode	Auto	Go Mode	Auto	Go Mode	Auto	Go Mode	Auto	Go Mode	Auto	Go Mode	Auto	Go Mode	Auto	Go Mode	Auto
Radio Input	N/A	Radio Input	N/A	Radio Input	N/A	Radio Input	N/A	Radio Input	N/A	Radio Input	N/A	Radio Input	N/A	Radio Input	N/A
Hard Wire Input	N/a	Hard Wire Input	N/a	Hard Wire Input	N/a	Hard Wire Input	N/a	Hard Wire Input	N/a	Hard Wire Input	N/a	Hard Wire Input	N/a	Hard Wire Input	N/a
BIT	N/A	BIT	N/A	BIT	N/A	BIT	N/A	BIT	N/A	BIT	N/A	BIT	N/A	BIT	N/A
STEP ACTION		**STEP ACTION**		**STEP ACTION**		**STEP ACTION**		**STEP ACTION**		**STEP ACTION**		**STEP ACTION**		**STEP ACTION**	
Function	Forward	Function	Rotate	Function	Forward	Function	Rotate	Function	Forward	Function	Rotate	Function	Forward	Function	Rotate
Speed	33	Speed	33	Speed	33	Speed	33	Speed	33	Speed	33	Speed	33	Speed	33
Navigation	DR	Navigation	DR	Navigation	DR	Navigation	DR	Navigation	DR	Navigation	DR	Navigation	DR	Navigation	DR
Direction	Center	Direction	Center	Direction	Center	Direction	Center	Direction	Center	Direction	Center	Direction	Center	Direction	Center
Size	1164	Size	-90	Size	2284	Size	90	Size	962	Size	-90	Size	525	Size	90
Loss Of Guidance	N/A	Loss Of Guidance	N/A	Loss Of Guidance	N/A	Loss Of Guidance	N/A	Loss Of Guidance	N/A	Loss Of Guidance	N/A	Loss Of Guidance	N/A	Loss Of Guidance	N/A
Obstacle Avoidance	1	Obstacle Avoidance	1	Obstacle Avoidance	1	Obstacle Avoidance	1	Obstacle Avoidance	1	Obstacle Avoidance	1	Obstacle Avoidance	1	Obstacle Avoidance	1
Output	#6-Pin Up	Output	#6-Pin Up	Output	#6-Pin Up	Output	#6-Pin Up	Output	#6-Pin Up	Output	#6-Pin Up	Output	#6-Pin Up	Output	#6-Pin Up
END OF STEP		**END OF STEP**		**END OF STEP**		**END OF STEP**		**END OF STEP**		**END OF STEP**		**END OF STEP**		**END OF STEP**	
END MODE	Distance	END MODE	Distance	END MODE	Distance	END MODE	Distance	END MODE	Distance	END MODE	Distance	END MODE	Distance	END MODE	Distance
END ACTION	Merge	END ACTION	Merge	END ACTION	Merge	END ACTION	Merge	END ACTION	Merge	END ACTION	Merge	END ACTION	Merge	END ACTION	Merge
NEXT ROUTE	2	NEXT ROUTE	2	NEXT ROUTE	2	NEXT ROUTE	2	NEXT ROUTE	2	NEXT ROUTE	2	NEXT ROUTE	2	NEXT ROUTE	2
NEXT STEP	58	NEXT STEP	59	NEXT STEP	60	NEXT STEP	61	NEXT STEP	62	NEXT STEP	63	NEXT STEP	64	NEXT STEP	65

Route 2		Route 2		Route 2		Route 2		Route 2		Route 2		Route 2		Route 2	
Route	2	Route	2	Route	2	Route	2	Route	2	Route	2	Route	2	Route	2
Step	65	Step	66	Step	67	Step	68	Step	69	Step	70	Step	71	Step	72
STEP INITIATION		**STEP INITIATION**		**STEP INITIATION**		**STEP INITIATION**		**STEP INITIATION**		**STEP INITIATION**		**STEP INITIATION**		**STEP INITIATION**	
Go Mode	Auto	Go Mode	Auto	Go Mode	Auto	Go Mode	Auto	Go Mode	Auto	Go Mode	Auto	Go Mode	Auto	Go Mode	Auto
Radio Input	N/A	Radio Input	N/A	Radio Input	N/A	Radio Input	N/A	Radio Input	N/A	Radio Input	N/A	Radio Input	N/A	Radio Input	N/A
Hard Wire Input	N/a	Hard Wire Input	N/a	Hard Wire Input	N/a	Hard Wire Input	N/a	Hard Wire Input	N/a	Hard Wire Input	N/a	Hard Wire Input	N/a	Hard Wire Input	N/a
BIT	N/A	BIT	N/A	BIT	N/A	BIT	N/A	BIT	N/A	BIT	N/A	BIT	N/A	BIT	N/A
STEP ACTION		**STEP ACTION**		**STEP ACTION**		**STEP ACTION**		**STEP ACTION**		**STEP ACTION**		**STEP ACTION**		**STEP ACTION**	
Function	Forward	Function	Rotate	Function	Reverse	Function	Rotate	Function	Reverse	Function	Delay	Function	Forward	Function	Rotate
Speed	33	Speed	33	Speed	33	Speed	33	Speed	33	Speed	33	Speed	33	Speed	33
Navigation	DR	Navigation	DR	Navigation	DR	Navigation	DR	Navigation	DR	Navigation	DR	Navigation	DR	Navigation	DR
Direction	Center	Direction	Center	Direction	Center	Direction	Center	Direction	Center	Direction	Center	Direction	Center	Direction	Center
Size	248	Size	-90	Size	57	Size	-90	Size	84	Size	5	Size	84	Size	90
Loss Of Guidance	N/A	Loss Of Guidance	N/A	Loss Of Guidance	N/A	Loss Of Guidance	N/A	Loss Of Guidance	N/A	Loss Of Guidance	N/A	Loss Of Guidance	N/A	Loss Of Guidance	N/A
Obstacle Avoidance	1	Obstacle Avoidance	1	Obstacle Avoidance	1	Obstacle Avoidance	1	Obstacle Avoidance	1	Obstacle Avoidance	1	Obstacle Avoidance	1	Obstacle Avoidance	1
Output	#6-Pin Up	Output	#6-Pin Up	Output	#6-Pin Up	Output	#6-Pin Up	Output	#6-Pin Up	Output	7-Pin dow	Output		Output	
END OF STEP		**END OF STEP**		**END OF STEP**		**END OF STEP**		**END OF STEP**		**END OF STEP**		**END OF STEP**		**END OF STEP**	
END MODE	Distance	END MODE	Distance	END MODE	Distance	END MODE	Distance	END MODE	Distance	END MODE	Distance	END MODE	Distance	END MODE	Distance
END ACTION	Merge	END ACTION	Merge	END ACTION	Merge	END ACTION	Merge	END ACTION	Merge	END ACTION	Merge	END ACTION	Merge	END ACTION	Merge
NEXT ROUTE	2	NEXT ROUTE	2	NEXT ROUTE	2	NEXT ROUTE	2	NEXT ROUTE	2	NEXT ROUTE	2	NEXT ROUTE	2	NEXT ROUTE	2
NEXT STEP	66	NEXT STEP	67	NEXT STEP	68	NEXT STEP	69	NEXT STEP	70	NEXT STEP	71	NEXT STEP	72	NEXT STEP	73

Route 2		Route 2		Route 2		Route 2		Route 2		Route 0: 1	
Route	2	Route	2	Route	2	Route	2	Route	2	**STEP INITIATION**	
Step	73	Step	74	Step	75	Step	76	Step	77	**Go Mode**	nput Trigge
STEP INITIATION		**STEP INITIATION**		**STEP INITIATION**		**STEP INITIATION**		**STEP INITIATION**		**Radio Input**	dio Input 1-
Go Mode	Auto	Go Mode	Auto	Go Mode	Auto	Go Mode	Auto	Go Mode	Auto	**Hard Wire Input**	N/a
Radio Input	N/A	Radio Input	N/A	Radio Input	N/A	Radio Input	N/A	Radio Input	N/A	**BIT**	BIT #1-#24
Hard Wire Input	N/a	Hard Wire Input	N/a	Hard Wire Input	N/a	Hard Wire Input	N/a	Hard Wire Input	N/a		
BIT	N/A	BIT	N/A	BIT	N/A	BIT	N/A	BIT	N/A		
STEP ACTION		**STEP ACTION**		**STEP ACTION**		**STEP ACTION**		**STEP ACTION**		**STEP ACTION**	
Function	Forward	Function	Rotate	Function	Reverse	Function	Rotate	Function	Reverse	**Function**	Auto
Speed	33	Speed	33	Speed	33	Speed	33	Speed	33	**Speed**	33
Navigation	DR	Navigation	DR	Navigation	DR	Navigation	DR	Navigation	DR	**Navigation**	DR
Direction	Center	Direction	Center	Direction	Center	Direction	Center	Direction	Center	**Direction**	Center
Size	57	Size	-90	Size	168	Size	90	Size	66	**Size**	66
Loss Of Guidance	N/A	Loss Of Guidance	N/A	Loss Of Guidance	N/A	Loss Of Guidance	N/A	Loss Of Guidance	N/A	**Loss Of Guidance**	N/A
Obstacle Avoidance	1	Obstacle Avoidance	1	Obstacle Avoidance	1	Obstacle Avoidance	1	Obstacle Avoidance	1	**Obstacle Avoidance**	1
Output		Output		Output		Output		Output		**Output**	N/a
END OF STEP		**END OF STEP**		**END OF STEP**		**END OF STEP**		**END OF STEP**		**END OF STEP**	
END MODE	Distance	END MODE	Distance	END MODE	Distance	END MODE	Distance	END MODE	Distance	**END MODE**	Distance
END ACTION	Merge	END ACTION	Merge	END ACTION	Merge	END ACTION	Merge	END ACTION	rge Bit #3	**END ACTION**	Merge
NEXT ROUTE	2	NEXT ROUTE	2	NEXT ROUTE	2	NEXT ROUTE	2	NEXT ROUTE	0	**NEXT ROUTE**	0
NEXT STEP	74	NEXT STEP	75	NEXT STEP	76	NEXT STEP	77	NEXT STEP	1	**NEXT STEP**	1

Tier 3 Route 3

Route 3: 1		Route 3: 2		Route 3: 3		Route 3: 4		Route 3: 5		Route 3: 6		Route 3: 7		Route 3: 8	
STEP INITIATION		**STEP INITIATION**		**STEP INITIATION**		**STEP INITIATION**		**STEP INITIATION**		**STEP INITIATION**		**STEP INITIATION**		**STEP INITIATION**	
Go Mode	put Trigger	**Go Mode**	Auto	**Go Mode**	Auto	**Go Mode**	Auto	**Go Mode**	Auto	**Go Mode**	Auto	**Go Mode**	Auto	**Go Mode**	Auto
Radio Input	dio Input 1	**Radio Input**	dio Input 1	**Radio Input**	dio Input 1	**Radio Input**	dio Input 1	**Radio Input**	dio Input 1	**Radio Input**	dio Input 1	**Radio Input**	dio Input 1	**Radio Input**	dio Input 1
Hard Wire Input	N/A	**Hard Wire Input**	N/A	**Hard Wire Input**	N/A	**Hard Wire Input**	N/A	**Hard Wire Input**	N/A	**Hard Wire Input**	N/A	**Hard Wire Input**	N/A	**Hard Wire Input**	N/A
BIT	Bit #1 off	**BIT**	N/A	**BIT**	N/A	**BIT**	N/A	**BIT**	N/A	**BIT**	N/A	**BIT**	N/A	**BIT**	N/A
	Bit #5 On														
Home Position RFID	Bit #6 On														
STEP ACTION		**STEP ACTION**		**STEP ACTION**		**STEP ACTION**		**STEP ACTION**		**STEP ACTION**		**STEP ACTION**		**STEP ACTION**	
Function	Dispatch	**Function**	Forward	**Function**	Rotate	**Function**	Forward	**Function**	Rotate	**Function**	Forward	**Function**	Rotate	**Function**	Forward
Speed	N/A	**Speed**	33	**Speed**	33	**Speed**	33	**Speed**	33	**Speed**	33	**Speed**	33	**Speed**	33
Navigation	N/A	**Navigation**	DR	**Navigation**	DR	**Navigation**	DR	**Navigation**	DR	**Navigation**	DR	**Navigation**	DR	**Navigation**	DR
Direction	N/A	**Direction**	Center	**Direction**	Center	**Direction**	Center	**Direction**	Center	**Direction**	Center	**Direction**	Center	**Direction**	Center
Size	N/A	**Size**	66	**Size**	-90	**Size**	417	**Size**	-90	**Size**	525	**Size**	90	**Size**	962
Loss Of Guidance	N/A	**Loss Of Guidance**	N/A	**Loss Of Guidance**	N/A	**Loss Of Guidance**	N/A	**Loss Of Guidance**	N/A	**Loss Of Guidance**	N/A	**Loss Of Guidance**	N/A	**Loss Of Guidance**	N/A
Obstacle Avoidance	N/A	**Obstacle Avoidance**	1	**Obstacle Avoidance**	1	**Obstacle Avoidance**	1	**Obstacle Avoidance**	1	**Obstacle Avoidance**	1	**Obstacle Avoidance**	1	**Obstacle Avoidance**	1
Output	N/A	**Output**	N/A	**Output**	N/A	**Output**	N/A	**Output**	N/A	**Output**	N/A	**Output**	N/A	**Output**	N/A
END OF STEP		**END OF STEP**		**END OF STEP**		**END OF STEP**		**END OF STEP**		**END OF STEP**		**END OF STEP**		**END OF STEP**	
END MODE	N/A	**END MODE**	Distance	**END MODE**	Distance	**END MODE**	Distance	**END MODE**	Distance	**END MODE**	Distance	**END MODE**	Distance	**END MODE**	Distance
END ACTION	ge Bit #5, #6	**END ACTION**	Merge	**END ACTION**	Merge	**END ACTION**	Merge	**END ACTION**	Merge	**END ACTION**	Merge	**END ACTION**	Merge	**END ACTION**	Merge
NEXT ROUTE	3	**NEXT ROUTE**	3	**NEXT ROUTE**	3	**NEXT ROUTE**	3	**NEXT ROUTE**	3	**NEXT ROUTE**	3	**NEXT ROUTE**	3	**NEXT ROUTE**	3
NEXT STEP	**2**	**NEXT STEP**	**3**	**NEXT STEP**	**4**	**NEXT STEP**	**5**	**NEXT STEP**	**6**	**NEXT STEP**	**7**	**NEXT STEP**	**8**	**NEXT STEP**	**9**

Route 3: 9		Route 3: 10		Route 3: 11		Route 3: 12		Route 3: 13		Route 3: 14		Route 3: 15		Route 3: 16	
STEP INITIATION		**STEP INITIATION**		**STEP INITIATION**		**STEP INITIATION**		**STEP INITIATION**		**STEP INITIATION**		**STEP INITIATION**		**STEP INITIATION**	
Go Mode	Auto	**Go Mode**	Auto	**Go Mode**	Auto	**Go Mode**	Auto	**Go Mode**	Auto	**Go Mode**	Auto	**Go Mode**	Auto	**Go Mode**	Auto
Radio Input	dio Input 1	**Radio Input**	dio Input 1	**Radio Input**	dio Input 1	**Radio Input**	dio Input 1	**Radio Input**	dio Input 1	**Radio Input**	dio Input 1	**Radio Input**	dio Input 1	**Radio Input**	dio Input 1
Hard Wire Input	N/A	**Hard Wire Input**	N/A	**Hard Wire Input**	N/A	**Hard Wire Input**	N/A	**Hard Wire Input**	N/A	**Hard Wire Input**	N/A	**Hard Wire Input**	N/A	**Hard Wire Input**	N/A
BIT	N/A	**BIT**	N/A	**BIT**	N/A	**BIT**	N/A	**BIT**	N/A	**BIT**	N/A	**BIT**	N/A	**BIT**	N/A
STEP ACTION		**STEP ACTION**		**STEP ACTION**		**STEP ACTION**		**STEP ACTION**		**STEP ACTION**		**STEP ACTION**		**STEP ACTION**	
Function	Rotate	**Function**	Forward	**Function**	Rotate	**Function**	Forward	**Function**	Rotate	**Function**	Forward	**Function**	Rotate	**Function**	Forward
Speed	33	**Speed**	33	**Speed**	33	**Speed**	33	**Speed**	33	**Speed**	33	**Speed**	33	**Speed**	33
Navigation	DR	**Navigation**	DR	**Navigation**	DR	**Navigation**	DR	**Navigation**	DR	**Navigation**	DR	**Navigation**	DR	**Navigation**	DR
Direction	Center	**Direction**	Center	**Direction**	Center	**Direction**	Center	**Direction**	Center	**Direction**	Center	**Direction**	Center	**Direction**	Center
Size	-90	**Size**	1915	**Size**	-90	**Size**	1007	**Size**	90	**Size**	657	**Size**	90	**Size**	403
Loss Of Guidance	N/A	**Loss Of Guidance**	N/A	**Loss Of Guidance**	N/A	**Loss Of Guidance**	N/A	**Loss Of Guidance**	N/A	**Loss Of Guidance**	N/A	**Loss Of Guidance**	N/A	**Loss Of Guidance**	N/A
Obstacle Avoidance	1	**Obstacle Avoidance**	1	**Obstacle Avoidance**	1	**Obstacle Avoidance**	1	**Obstacle Avoidance**	1	**Obstacle Avoidance**	1	**Obstacle Avoidance**	1	**Obstacle Avoidance**	1
Output	N/A	**Output**	N/A	**Output**	N/A	**Output**	N/A	**Output**	N/A	**Output**	N/A	**Output**	N/A	**Output**	N/A
END OF STEP		**END OF STEP**		**END OF STEP**		**END OF STEP**		**END OF STEP**		**END OF STEP**		**END OF STEP**		**END OF STEP**	
END MODE	Distance	**END MODE**	Distance	**END MODE**	Distance	**END MODE**	Distance	**END MODE**	Distance	**END MODE**	Distance	**END MODE**	Distance	**END MODE**	Distance
END ACTION	Merge	**END ACTION**	Merge	**END ACTION**	Merge	**END ACTION**	Merge	**END ACTION**	Merge	**END ACTION**	Merge	**END ACTION**	Merge	**END ACTION**	Merge
NEXT ROUTE	3	**NEXT ROUTE**	3	**NEXT ROUTE**	3	**NEXT ROUTE**	3	**NEXT ROUTE**	3	**NEXT ROUTE**	3	**NEXT ROUTE**	3	**NEXT ROUTE**	3
NEXT STEP	**10**	**NEXT STEP**	**11**	**NEXT STEP**	**12**	**NEXT STEP**	**13**	**NEXT STEP**	**14**	**NEXT STEP**	**15**	**NEXT STEP**	**16**	**NEXT STEP**	**17**

Route 3: 17		Route 3: 18		Route 3: 19		Route 3: 20		Route 3: 21		Route 3: 22		Route 3: 23		Route 3: 24	
STEP INITIATION		**STEP INITIATION**		**STEP INITIATION**		**STEP INITIATION**		**STEP INITIATION**		**STEP INITIATION**		**STEP INITIATION**		**STEP INITIATION**	
Go Mode	Auto	**Go Mode**	Auto	**Go Mode**	Auto	**Go Mode**	Auto	**Go Mode**	Auto	**Go Mode**	Auto	**Go Mode**	Auto	**Go Mode**	Auto
Radio Input	dio Input 1	**Radio Input**	dio Input 1	**Radio Input**	dio Input 1	**Radio Input**	dio Input 1	**Radio Input**	dio Input 1	**Radio Input**	dio Input 1	**Radio Input**	dio Input 1	**Radio Input**	dio Input 1
Hard Wire Input	N/A	**Hard Wire Input**	N/A	**Hard Wire Input**	N/A	**Hard Wire Input**	N/A	**Hard Wire Input**	cart Prese	**Hard Wire Input**	N/a	**Hard Wire Input**	N/a	**Hard Wire Input**	N/a
BIT	N/A	**BIT**	N/A	**BIT**	N/A	**BIT**	N/A	**BIT**	N/A	**BIT**	N/A	**BIT**	N/A	**BIT**	N/A
STEP ACTION		**STEP ACTION**		**STEP ACTION**		**STEP ACTION**		**STEP ACTION**		**STEP ACTION**		**STEP ACTION**		**STEP ACTION**	
Function	Rotate	**Function**	Forward	**Function**	Rotate	**Function**	Reverse	**Function**	Forward	**Function**	Rotate	**Function**	Forward	**Function**	Rotate
Speed	33	**Speed**	33	**Speed**	33	**Speed**	33	**Speed**	33	**Speed**	33	**Speed**	33	**Speed**	33
Navigation	DR	**Navigation**	DR	**Navigation**	DR	**Navigation**	DR	**Navigation**	DR	**Navigation**	DR	**Navigation**	DR	**Navigation**	DR
Direction	Center	**Direction**	Center	**Direction**	Center	**Direction**	Center	**Direction**	Center	**Direction**	Center	**Direction**	Center	**Direction**	Center
Size	-90	**Size**	54	**Size**	-90	**Size**	79	**Size**	79	**Size**	-90	**Size**	54	**Size**	90
Loss Of Guidance	N/A	**Loss Of Guidance**	N/A	**Loss Of Guidance**	N/A	**Loss Of Guidance**	N/A	**Loss Of Guidance**	N/A	**Loss Of Guidance**	N/A	**Loss Of Guidance**	N/A	**Loss Of Guidance**	N/A
Obstacle Avoidance	1	**Obstacle Avoidance**	1	**Obstacle Avoidance**	1	**Obstacle Avoidance**	1	**Obstacle Avoidance**	1	**Obstacle Avoidance**	1	**Obstacle Avoidance**	1	**Obstacle Avoidance**	1
Output	N/A	**Output**	N/A	**Output**	N/A	**Output**	#6 pin up	**Output**	N/a	**Output**	N/a	**Output**	N/a	**Output**	N/a
END OF STEP		**END OF STEP**		**END OF STEP**		**END OF STEP**		**END OF STEP**		**END OF STEP**		**END OF STEP**		**END OF STEP**	
END MODE	Distance	**END MODE**	Distance	**END MODE**	Distance	**END MODE**	Distance	**END MODE**	Distance	**END MODE**	Distance	**END MODE**	Distance	**END MODE**	Distance
END ACTION	Merge	**END ACTION**	Merge	**END ACTION**	Merge	**END ACTION**	Merge	**END ACTION**	Merge	**END ACTION**	Merge	**END ACTION**	Merge	**END ACTION**	Merge
NEXT ROUTE	3	**NEXT ROUTE**	3	**NEXT ROUTE**	3	**NEXT ROUTE**	3	**NEXT ROUTE**	3	**NEXT ROUTE**	3	**NEXT ROUTE**	3	**NEXT ROUTE**	3
NEXT STEP	**18**	**NEXT STEP**	**19**	**NEXT STEP**	**20**	**NEXT STEP**	**21**	**NEXT STEP**	**22**	**NEXT STEP**	**23**	**NEXT STEP**	**24**	**NEXT STEP**	**25**

Route 3: 25		Route 3: 26		Route 3: 27		Route 3: 28		Route 3: 29		Route 3: 30		Route 3: 31		Route 3: 32	
STEP INITIATION		**STEP INITIATION**		**STEP INITIATION**		**STEP INITIATION**		**STEP INITIATION**		**STEP INITIATION**		**STEP INITIATION**		**STEP INITIATION**	
Go Mode	Auto	**Go Mode**	Auto	**Go Mode**	Auto	**Go Mode**	Auto	**Go Mode**	Auto	**Go Mode**	Auto	**Go Mode**	Auto	**Go Mode**	Auto
Radio Input	dio Input 1	**Radio Input**	dio Input 1	**Radio Input**	dio Input 1	**Radio Input**	dio Input 1	**Radio Input**	dio Input 1	**Radio Input**	dio Input 1	**Radio Input**	dio Input 1	**Radio Input**	dio Input 1
Hard Wire Input	N/a	**Hard Wire Input**	N/a	**Hard Wire Input**	N/a	**Hard Wire Input**	N/a	**Hard Wire Input**	N/a	**Hard Wire Input**	N/a	**Hard Wire Input**	N/a	**Hard Wire Input**	N/a
BIT	N/A	**BIT**	N/A	**BIT**	N/A	**BIT**	N/A	**BIT**	N/A	**BIT**	N/A	**BIT**	N/A	**BIT**	N/A
STEP ACTION		**STEP ACTION**		**STEP ACTION**		**STEP ACTION**		**STEP ACTION**		**STEP ACTION**		**STEP ACTION**		**STEP ACTION**	
Function	Forward	**Function**	Rotate	**Function**	Forward	**Function**	Rotate	**Function**	Forward	**Function**	Rotate	**Function**	Forward	**Function**	Rotate
Speed	33	**Speed**	33	**Speed**	33	**Speed**	33	**Speed**	33	**Speed**	33	**Speed**	33	**Speed**	33
Navigation	DR	**Navigation**	DR	**Navigation**	DR	**Navigation**	DR	**Navigation**	DR	**Navigation**	DR	**Navigation**	DR	**Navigation**	DR
Direction	Center	**Direction**	Center	**Direction**	Center	**Direction**	Center	**Direction**	Center	**Direction**	Center	**Direction**	Center	**Direction**	Center
Size	403	**Size**	-90	**Size**	657	**Size**	-90	**Size**	1007	**Size**	-90	**Size**	369	**Size**	90
Loss Of Guidance	N/A	**Loss Of Guidance**	N/A	**Loss Of Guidance**	N/A	**Loss Of Guidance**	N/A	**Loss Of Guidance**	N/A	**Loss Of Guidance**	N/A	**Loss Of Guidance**	N/A	**Loss Of Guidance**	N/A
Obstacle Avoidance	1	**Obstacle Avoidance**	1	**Obstacle Avoidance**	1	**Obstacle Avoidance**	1	**Obstacle Avoidance**	1	**Obstacle Avoidance**	1	**Obstacle Avoidance**	1	**Obstacle Avoidance**	1
Output	N/a	**Output**	N/a	**Output**	N/a	**Output**	N/a	**Output**	N/a	**Output**	N/a	**Output**	N/a	**Output**	N/a
END OF STEP		**END OF STEP**		**END OF STEP**		**END OF STEP**		**END OF STEP**		**END OF STEP**		**END OF STEP**		**END OF STEP**	
END MODE	Distance	**END MODE**	Distance	**END MODE**	Distance	**END MODE**	Distance	**END MODE**	Distance	**END MODE**	Distance	**END MODE**	Distance	**END MODE**	Distance
END ACTION	Merge	**END ACTION**	Merge	**END ACTION**	Merge	**END ACTION**	Merge	**END ACTION**	Merge	**END ACTION**	Merge	**END ACTION**	Merge	**END ACTION**	Merge
NEXT ROUTE	3	**NEXT ROUTE**	3	**NEXT ROUTE**	3	**NEXT ROUTE**	3	**NEXT ROUTE**	3	**NEXT ROUTE**	3	**NEXT ROUTE**	3	**NEXT ROUTE**	3
NEXT STEP	**26**	**NEXT STEP**	**27**	**NEXT STEP**	**28**	**NEXT STEP**	**29**	**NEXT STEP**	**30**	**NEXT STEP**	**31**	**NEXT STEP**	**32**	**NEXT STEP**	**33**

Route 3: 33		Route 3: 34		Route 3: 35		Route 3: 36		Route 3: 37		Route 3: 38		Route 3: 39		Route 3: 40	
STEP INITIATION		STEP INITIATION		STEP INITIATION		STEP INITIATION		STEP INITIATION		STEP INITIATION		STEP INITIATION		STEP INITIATION	
Go Mode	Auto	Go Mode	Auto	Go Mode	Auto	Go Mode	Auto	Go Mode	Auto	Go Mode	Auto	Go Mode	Auto	Go Mode	Auto
Radio Input	dio Input 1	Radio Input	dio Input 1	Radio Input	dio Input 1	Radio Input	dio Input 1	Radio Input	dio Input 1	Radio Input	dio Input 1	Radio Input	dio Input 1	Radio Input	dio Input 1
Hard Wire Input	N/A	Hard Wire Input	N/A	Hard Wire Input	N/A	Hard Wire Input	N/A	Hard Wire Input	N/A	Hard Wire Input	N/A	Hard Wire Input	N/A	Hard Wire Input	N/A
BIT	N/A	BIT	N/A	BIT	N/A	BIT	N/A	BIT	N/A	BIT	N/A	BIT	N/A	BIT	N/A
STEP ACTION		STEP ACTION		STEP ACTION		STEP ACTION		STEP ACTION		STEP ACTION		STEP ACTION		STEP ACTION	
Function	Forward	Function	Rotate	Function	Forward	Function	Rotate	Function	Forward	Function	Rotate	Function	Reverse	Function	Delay
Speed	33	Speed	33	Speed	33	Speed	33	Speed	33	Speed	33	Speed	33	Speed	33
Navigation	DR	Navigation	DR	Navigation	DR	Navigation	DR	Navigation	DR	Navigation	DR	Navigation	DR	Navigation	DR
Direction	Center	Direction	Center	Direction	Center	Direction	Center	Direction	Center	Direction	Center	Direction	Center	Direction	Center
Size	1164	Size	-90	Size	314	Size	90	Size	1883	Size	-90	Size	97	Size	5
Loss Of Guidance	N/A	Loss Of Guidance	N/A	Loss Of Guidance	N/A	Loss Of Guidance	N/A	Loss Of Guidance	N/A	Loss Of Guidance	N/A	Loss Of Guidance	N/A	Loss Of Guidance	N/A
Obstacle Avoidance	1	Obstacle Avoidance	1	Obstacle Avoidance	1	Obstacle Avoidance	1	Obstacle Avoidance	1	Obstacle Avoidance	1	Obstacle Avoidance	1	Obstacle Avoidance	1
Output	N/A	Output	N/A	Output	N/A	Output	N/A	Output	N/A	Output	N/A	Output	N/A	Output	#7 Pin Drop
END OF STEP		END OF STEP		END OF STEP		END OF STEP		END OF STEP		END OF STEP		END OF STEP		END OF STEP	
END MODE	Distance	END MODE	Distance	END MODE	Distance	END MODE	Distance	END MODE	Distance	END MODE	Distance	END MODE	Distance	END MODE	Distance
END ACTION	Merge	END ACTION	Merge	END ACTION	Merge	END ACTION	Merge	END ACTION	Merge	END ACTION	Merge	END ACTION	Merge	END ACTION	Merge
NEXT ROUTE	3	NEXT ROUTE	3	NEXT ROUTE	3	NEXT ROUTE	3	NEXT ROUTE	3	NEXT ROUTE	3	NEXT ROUTE	3	NEXT ROUTE	3
NEXT STEP	34	NEXT STEP	35	NEXT STEP	36	NEXT STEP	37	NEXT STEP	38	NEXT STEP	39	NEXT STEP	40	NEXT STEP	41

Route 3: 41		Route 3: 42		Route 3: 43		Route 3: 44		Route 3: 45		Route 3: 46		Route 3: 47		Route 3: 48	
STEP INITIATION		STEP INITIATION		STEP INITIATION		STEP INITIATION		STEP INITIATION		STEP INITIATION		STEP INITIATION		STEP INITIATION	
Go Mode	Auto	Go Mode	Auto	Go Mode	Auto	Go Mode	Auto	Go Mode	Auto	Go Mode	Auto	Go Mode	Auto	Go Mode	Auto
Radio Input	dio Input 1	Radio Input	dio Input 1	Radio Input	dio Input 1	Radio Input	dio Input 1	Radio Input	dio Input 1	Radio Input	dio Input 1	Radio Input	dio Input 1	Radio Input	dio Input 1
Hard Wire Input	N/A	Hard Wire Input	N/A	Hard Wire Input	N/A	Hard Wire Input	N/A	Hard Wire Input	N/A	Hard Wire Input	N/A	Hard Wire Input	N/A	Hard Wire Input	N/A
BIT	N/A	BIT	N/A	BIT	N/A	BIT	N/A	BIT	N/A	BIT	N/A	BIT	N/A	BIT	N/A
STEP ACTION		STEP ACTION		STEP ACTION		STEP ACTION		STEP ACTION		STEP ACTION		STEP ACTION		STEP ACTION	
Function	Forward	Function	Rotate	Function	Forward	Function	Rotate	Function	Forward	Function	Rotate	Function	Forward	Function	Rotate
Speed	33	Speed	33	Speed	33	Speed	33	Speed	33	Speed	33	Speed	33	Speed	33
Navigation	DR	Navigation	DR	Navigation	DR	Navigation	DR	Navigation	DR	Navigation	DR	Navigation	DR	Navigation	DR
Direction	Center	Direction	Center	Direction	Center	Direction	Center	Direction	Center	Direction	Center	Direction	Center	Direction	Center
Size	97	Size	-90	Size	1883	Size	-90	Size	314	Size	90	Size	1164	Size	-90
Loss Of Guidance	N/A	Loss Of Guidance	N/A	Loss Of Guidance	N/A	Loss Of Guidance	N/A	Loss Of Guidance	N/A	Loss Of Guidance	N/A	Loss Of Guidance	N/A	Loss Of Guidance	N/A
Obstacle Avoidance	1	Obstacle Avoidance	1	Obstacle Avoidance	1	Obstacle Avoidance	1	Obstacle Avoidance	1	Obstacle Avoidance	1	Obstacle Avoidance	1	Obstacle Avoidance	1
Output	N/A	Output	N/A	Output	N/A	Output	N/A	Output	N/A	Output	N/A	Output	N/A	Output	N/A
END OF STEP		END OF STEP		END OF STEP		END OF STEP		END OF STEP		END OF STEP		END OF STEP		END OF STEP	
END MODE	Distance	END MODE	Distance	END MODE	Distance	END MODE	Distance	END MODE	Distance	END MODE	Distance	END MODE	Distance	END MODE	Distance
END ACTION	Merge	END ACTION	Merge	END ACTION	Merge	END ACTION	Merge	END ACTION	Merge	END ACTION	Merge	END ACTION	Merge	END ACTION	Merge
NEXT ROUTE	3	NEXT ROUTE	3	NEXT ROUTE	3	NEXT ROUTE	3	NEXT ROUTE	3	NEXT ROUTE	3	NEXT ROUTE	3	NEXT ROUTE	3
NEXT STEP	42	NEXT STEP	43	NEXT STEP	44	NEXT STEP	45	NEXT STEP	46	NEXT STEP	47	NEXT STEP	48	NEXT STEP	49

Route 3: 49		Route 3: 50		Route 3: 51		Route 3: 52		Route 3: 53		Route 3: 54		Route 3: 55		Route 3: 56	
STEP INITIATION		STEP INITIATION		STEP INITIATION		STEP INITIATION		STEP INITIATION		STEP INITIATION		STEP INITIATION		STEP INITIATION	
Go Mode	Auto	Go Mode	Auto	Go Mode	Auto	Go Mode	Auto	Go Mode	Auto	Go Mode	Auto	Go Mode	Auto	Go Mode	Auto
Radio Input	dio Input 1	Radio Input	dio Input 1	Radio Input	dio Input 1	Radio Input	dio Input 1	Radio Input	dio Input 1	Radio Input	dio Input 1	Radio Input	dio Input 1	Radio Input	dio Input 1
Hard Wire Input	N/A	Hard Wire Input	N/A	Hard Wire Input	N/A	Hard Wire Input	N/A	Hard Wire Input	N/A	Hard Wire Input	N/A	Hard Wire Input	N/A	Hard Wire Input	N/A
BIT	N/A	BIT	N/A	BIT	N/A	BIT	N/A	BIT	N/A	BIT	N/A	BIT	N/A	BIT	N/A
STEP ACTION		STEP ACTION		STEP ACTION		STEP ACTION		STEP ACTION		STEP ACTION		STEP ACTION		STEP ACTION	
Function	Forward	Function	Rotate	Function	Forward	Function	Forward	Function	Rotate	Function	Forward	Function	Rotate	Function	Forward
Speed	33	Speed	33	Speed	33	Speed	33	Speed	33	Speed	33	Speed	33	Speed	33
Navigation	DR	Navigation	DR	Navigation	DR	Navigation	DR	Navigation	DR	Navigation	DR	Navigation	DR	Navigation	DR
Direction	Center	Direction	Center	Direction	Center	Direction	Center	Direction	Center	Direction	Center	Direction	Center	Direction	Center
Size	2284	Size	90	Size	962	Size	962	Size	-90	Size	525	Size	90	Size	417
Loss Of Guidance	N/A	Loss Of Guidance	N/A	Loss Of Guidance	N/A	Loss Of Guidance	N/A	Loss Of Guidance	N/A	Loss Of Guidance	N/A	Loss Of Guidance	N/A	Loss Of Guidance	N/A
Obstacle Avoidance	1	Obstacle Avoidance	1	Obstacle Avoidance	1	Obstacle Avoidance	1	Obstacle Avoidance	1	Obstacle Avoidance	1	Obstacle Avoidance	1	Obstacle Avoidance	1
Output	N/A	Output	N/A	Output	N/A	Output	N/A	Output	N/A	Output	N/A	Output	N/A	Output	N/A
END OF STEP		END OF STEP		END OF STEP		END OF STEP		END OF STEP		END OF STEP		END OF STEP		END OF STEP	
END MODE	Distance	END MODE	Distance	END MODE	Distance	END MODE	Distance	END MODE	Distance	END MODE	Distance	END MODE	Distance	END MODE	Distance
END ACTION	Merge	END ACTION	Merge	END ACTION	Merge	END ACTION	Merge	END ACTION	Merge	END ACTION	Merge	END ACTION	Merge	END ACTION	Merge
NEXT ROUTE	3	NEXT ROUTE	3	NEXT ROUTE	3	NEXT ROUTE	3	NEXT ROUTE	3	NEXT ROUTE	3	NEXT ROUTE	3	NEXT ROUTE	3
NEXT STEP	50	NEXT STEP	51	NEXT STEP	52	NEXT STEP	53	NEXT STEP	54	NEXT STEP	55	NEXT STEP	56	NEXT STEP	57

Route 3: 57		Route 3: 58		Route 0: 1	
STEP INITIATION		STEP INITIATION		STEP INITIATION	
Go Mode	Auto	Go Mode	Auto	Go Mode	nput Trigge
Radio Input	dio Input 1-	Radio Input	dio Input 1-	Radio Input	dio Input 1-
Hard Wire Input	N/A	Hard Wire Input	N/A	Hard Wire Input	N/A
BIT	N/A	BIT	N/A	BIT	BIT #1-#24
STEP ACTION		STEP ACTION		STEP ACTION	
Function	Rotate	Function	Reverse	Function	Auto
Speed	33	Speed	33	Speed	33
Navigation	DR	Navigation	DR	Navigation	DR
Direction	Center	Direction	Center	Direction	Center
Size	-90	Size	66	Size	66
Loss Of Guidance	N/A	Loss Of Guidance	N/A	Loss Of Guidance	N/A
Obstacle Avoidance	1	Obstacle Avoidance	1	Obstacle Avoidance	1
Output	N/A	Output	N/A	Output	N/A
END OF STEP		END OF STEP		END OF STEP	
END MODE	Distance	END MODE	Distance	END MODE	Distance
END ACTION	Merge	END ACTION	Merge	END ACTION	Merge
NEXT ROUTE	3	NEXT ROUTE	0	NEXT ROUTE	0
NEXT STEP	58	NEXT STEP	1	NEXT STEP	1

Tier 3 Route 4

Route 4: 1		Route 4: 2		Route 4: 3		Route 4: 4		Route 4: 5		Route 4: 6		Route 4: 7		Route 4: 8	
STEP INITIATION		STEP INITIATION		STEP INITIATION		STEP INITIATION		STEP INITIATION		STEP INITIATION		STEP INITIATION		STEP INITIATION	
Go Mode	nput Trigger	Go Mode	Auto	Go Mode	Auto	Go Mode	Auto	Go Mode	Auto	Go Mode	Auto	Go Mode	Auto	Go Mode	Auto
Radio Input	dio Input 1	Radio Input	dio Input 1	Radio Input	dio Input 1	Radio Input	dio Input 1	Radio Input	dio Input 1	Radio Input	dio Input 1	Radio Input	dio Input 1	Radio Input	dio Input 1
Hard Wire Input	N/A	Hard Wire Input	N/A	Hard Wire Input	N/A	Hard Wire Input	N/A	Hard Wire Input	N/A	Hard Wire Input	N/A	Hard Wire Input	N/A	Hard Wire Input	N/A
BIT	Bit #1 off	BIT	N/A	BIT	N/A	BIT	N/A	BIT	N/A	BIT	N/A	BIT	N/A	BIT	N/A
	Bit #7 On														
Home Position RFID	Bit #9 On														
STEP ACTION		STEP ACTION		STEP ACTION		STEP ACTION		STEP ACTION		STEP ACTION		STEP ACTION		STEP ACTION	
Function	Dispatch	Function	Forward	Function	Rotate	Function	Forward	Function	Rotate	Function	Forward	Function	Rotate	Function	Forward
Speed	N/A	Speed	33	Speed	33	Speed	33	Speed	33	Speed	33	Speed	33	Speed	33
Navigation	N/A	Navigation	DR	Navigation	DR	Navigation	DR	Navigation	DR	Navigation	DR	Navigation	DR	Navigation	DR
Direction	N/A	Direction	Center	Direction	Center	Direction	Center	Direction	Center	Direction	Center	Direction	Center	Direction	Center
Size	N/A	Size	66	Size	-90	Size	417	Size	-90	Size	525	Size	90	Size	962
Loss Of Guidance	N/A	Loss Of Guidance	N/A	Loss Of Guidance	N/A	Loss Of Guidance	N/A	Loss Of Guidance	N/A	Loss Of Guidance	N/A	Loss Of Guidance	N/A	Loss Of Guidance	N/A
Obstacle Avoidance	N/A	Obstacle Avoidance	1	Obstacle Avoidance	1	Obstacle Avoidance	1	Obstacle Avoidance	1	Obstacle Avoidance	1	Obstacle Avoidance	1	Obstacle Avoidance	1
Output	N/A	Output	N/A	Output	N/A	Output	N/A	Output	N/A	Output	N/A	Output	N/A	Output	N/A
END OF STEP		END OF STEP		END OF STEP		END OF STEP		END OF STEP		END OF STEP		END OF STEP		END OF STEP	
END MODE	N/A	END MODE	Distance	END MODE	Distance	END MODE	Distance	END MODE	Distance	END MODE	Distance	END MODE	Distance	END MODE	Distance
END ACTION	e Bit #7, #9	END ACTION	Merge	END ACTION	Merge	END ACTION	Merge	END ACTION	Merge	END ACTION	Merge	END ACTION	Merge	END ACTION	Merge
NEXT ROUTE	4	NEXT ROUTE	4	NEXT ROUTE	4	NEXT ROUTE	4	NEXT ROUTE	4	NEXT ROUTE	4	NEXT ROUTE	4	NEXT ROUTE	4
NEXT STEP	2	NEXT STEP	3	NEXT STEP	4	NEXT STEP	5	NEXT STEP	6	NEXT STEP	7	NEXT STEP	8	NEXT STEP	9

Route 4: 9		Route 4: 10		Route 4: 11		Route 4: 12		Route 4: 13		Route 4: 14		Route 4: 15		Route 4: 16	
STEP INITIATION		STEP INITIATION		STEP INITIATION		STEP INITIATION		STEP INITIATION		STEP INITIATION		STEP INITIATION		STEP INITIATION	
Go Mode	Auto	Go Mode	Auto	Go Mode	Auto	Go Mode	Auto	Go Mode	Auto	Go Mode	Auto	Go Mode	Auto	Go Mode	Auto
Radio Input	dio Input 1	Radio Input	dio Input 1	Radio Input	dio Input 1	Radio Input	dio Input 1	Radio Input	dio Input 1	Radio Input	dio Input 1	Radio Input	dio Input 1	Radio Input	dio Input 1
Hard Wire Input	N/A	Hard Wire Input	N/A	Hard Wire Input	N/A	Hard Wire Input	N/A	Hard Wire Input	N/A	Hard Wire Input	N/A	Hard Wire Input	N/A	Hard Wire Input	N/A
BIT	N/A	BIT	N/A	BIT	N/A	BIT	N/A	BIT	N/A	BIT	N/A	BIT	N/A	BIT	N/A
STEP ACTION		STEP ACTION		STEP ACTION		STEP ACTION		STEP ACTION		STEP ACTION		STEP ACTION		STEP ACTION	
Function	Rotate	Function	Forward	Function	Rotate	Function	Forward	Function	Rotate	Function	Forward	Function	Rotate	Function	Forward
Speed	33	Speed	33	Speed	33	Speed	33	Speed	33	Speed	33	Speed	33	Speed	33
Navigation	DR	Navigation	DR	Navigation	DR	Navigation	DR	Navigation	DR	Navigation	DR	Navigation	DR	Navigation	DR
Direction	Center	Direction	Center	Direction	Center	Direction	Center	Direction	Center	Direction	Center	Direction	Center	Direction	Center
Size	-90	Size	2284	Size	90	Size	1164	Size	-90	Size	314	Size	90	Size	1823
Loss Of Guidance	N/A	Loss Of Guidance	N/A	Loss Of Guidance	N/A	Loss Of Guidance	N/A	Loss Of Guidance	N/A	Loss Of Guidance	N/A	Loss Of Guidance	N/A	Loss Of Guidance	N/A
Obstacle Avoidance	1	Obstacle Avoidance	1	Obstacle Avoidance	1	Obstacle Avoidance	1	Obstacle Avoidance	1	Obstacle Avoidance	1	Obstacle Avoidance	1	Obstacle Avoidance	1
Output	N/A	Output	N/A	Output	N/A	Output	N/A	Output	N/A	Output	N/A	Output	N/A	Output	N/A
END OF STEP		END OF STEP		END OF STEP		END OF STEP		END OF STEP		END OF STEP		END OF STEP		END OF STEP	
END MODE	Distance	END MODE	Distance	END MODE	Distance	END MODE	Distance	END MODE	Distance	END MODE	Distance	END MODE	Distance	END MODE	Distance
END ACTION	Merge	END ACTION	Merge	END ACTION	Merge	END ACTION	Merge	END ACTION	Merge	END ACTION	Merge	END ACTION	Merge	END ACTION	Merge
NEXT ROUTE	4	NEXT ROUTE	4	NEXT ROUTE	4	NEXT ROUTE	4	NEXT ROUTE	4	NEXT ROUTE	4	NEXT ROUTE	4	NEXT ROUTE	4
NEXT STEP	10	NEXT STEP	11	NEXT STEP	12	NEXT STEP	13	NEXT STEP	14	NEXT STEP	15	NEXT STEP	16	NEXT STEP	17

Route 4: 17		Route 4: 18		Route 4: 19		Route 4: 20		Route 4: 21		Route 4: 22		Route 4: 23		Route 4: 24	
STEP INITIATION		STEP INITIATION		STEP INITIATION		STEP INITIATION		STEP INITIATION		STEP INITIATION		STEP INITIATION		STEP INITIATION	
Go Mode	Auto	Go Mode	Auto	Go Mode	Auto	Go Mode	Auto	Go Mode	Auto	Go Mode	Auto	Go Mode	Auto	Go Mode	Auto
Radio Input	dio Input 1	Radio Input	dio Input 1	Radio Input	dio Input 1	Radio Input	dio Input 1	Radio Input	dio Input 1	Radio Input	dio Input 1	Radio Input	dio Input 1	Radio Input	dio Input 1
Hard Wire Input	N/A	Hard Wire Input	N/A	Hard Wire Input	Part Preser	Hard Wire Input	N/A	Hard Wire Input	N/A	Hard Wire Input	N/A	Hard Wire Input	N/A	Hard Wire Input	N/A
BIT	N/A	BIT	N/A	BIT	N/A	BIT	N/A	BIT	N/A	BIT	N/A	BIT	N/A	BIT	N/A
STEP ACTION		STEP ACTION		STEP ACTION		STEP ACTION		STEP ACTION		STEP ACTION		STEP ACTION		STEP ACTION	
Function	Rotate	Function	Reverse	Function	Forward	Function	Rotate	Function	Forward	Function	Rotate	Function	Forward	Function	Rotate
Speed	33	Speed	33	Speed	33	Speed	33	Speed	33	Speed	33	Speed	33	Speed	33
Navigation	DR	Navigation	DR	Navigation	DR	Navigation	DR	Navigation	DR	Navigation	DR	Navigation	DR	Navigation	DR
Direction	Center	Direction	Center	Direction	Center	Direction	Center	Direction	Center	Direction	Center	Direction	Center	Direction	Center
Size	-90	Size	97	Size	97	Size	-90	Size	1823	Size	-90	Size	314	Size	90
Loss Of Guidance	N/A	Loss Of Guidance	N/A	Loss Of Guidance	N/A	Loss Of Guidance	N/A	Loss Of Guidance	N/A	Loss Of Guidance	N/A	Loss Of Guidance	N/A	Loss Of Guidance	N/A
Obstacle Avoidance	1	Obstacle Avoidance	1	Obstacle Avoidance	1	Obstacle Avoidance	1	Obstacle Avoidance	1	Obstacle Avoidance	1	Obstacle Avoidance	1	Obstacle Avoidance	1
Output	N/A	Output	6 Raise Pin	Output	N/A	Output	N/A	Output	N/A	Output	N/A	Output	N/A	Output	N/A
END OF STEP		END OF STEP		END OF STEP		END OF STEP		END OF STEP		END OF STEP		END OF STEP		END OF STEP	
END MODE	Distance	END MODE	Distance	END MODE	Distance	END MODE	Distance	END MODE	Distance	END MODE	Distance	END MODE	Distance	END MODE	Distance
END ACTION	Merge	END ACTION	Merge	END ACTION	Merge	END ACTION	Merge	END ACTION	Merge	END ACTION	Merge	END ACTION	Merge	END ACTION	Merge
NEXT ROUTE	4	NEXT ROUTE	4	NEXT ROUTE	4	NEXT ROUTE	4	NEXT ROUTE	4	NEXT ROUTE	4	NEXT ROUTE	4	NEXT ROUTE	4
NEXT STEP	18	NEXT STEP	19	NEXT STEP	20	NEXT STEP	21	NEXT STEP	22	NEXT STEP	23	NEXT STEP	24	NEXT STEP	25

Route 4: 25		Route 4: 26		Route 4: 27		Route 4: 28		Route 4: 29		Route 4: 30		Route 4: 31		Route 4: 32	
STEP INITIATION		STEP INITIATION		STEP INITIATION		STEP INITIATION		STEP INITIATION		STEP INITIATION		STEP INITIATION		STEP INITIATION	
Go Mode	Auto	Go Mode	Auto	Go Mode	Auto	Go Mode	Auto	Go Mode	Auto	Go Mode	Auto	Go Mode	Auto	Go Mode	Auto
Radio Input	dio Input 1	Radio Input	dio Input 1	Radio Input	dio Input 1	Radio Input	dio Input 1	Radio Input	dio Input 1	Radio Input	dio Input 1	Radio Input	dio Input 1	Radio Input	dio Input 1
Hard Wire Input	N/A	Hard Wire Input	N/A	Hard Wire Input	N/A	Hard Wire Input	N/A	Hard Wire Input	N/A	Hard Wire Input	N/A	Hard Wire Input	N/A	Hard Wire Input	N/A
BIT	N/A	BIT	N/A	BIT	N/A	BIT	N/A	BIT	N/A	BIT	N/A	BIT	N/A	BIT	N/A
STEP ACTION		STEP ACTION		STEP ACTION		STEP ACTION		STEP ACTION		STEP ACTION		STEP ACTION		STEP ACTION	
Function	Forward	Function	Rotate	Function	Forward	Function	Rotate	Function	Reverse	Function	Delay	Function	Forward	Function	Rotate
Speed	33	Speed	33	Speed	33	Speed	33	Speed	33	Speed	33	Speed	33	Speed	33
Navigation	DR	Navigation	DR	Navigation	DR	Navigation	DR	Navigation	DR	Navigation	DR	Navigation	DR	Navigation	DR
Direction	Center	Direction	Center	Direction	Center	Direction	Center	Direction	Center	Direction	Center	Direction	Center	Direction	Center
Size	1164	Size	90	Size	1868	Size	-90	Size	109	Size	5	Size	109	Size	-90
Loss Of Guidance	N/A	Loss Of Guidance	N/A	Loss Of Guidance	N/A	Loss Of Guidance	N/A	Loss Of Guidance	N/A	Loss Of Guidance	N/A	Loss Of Guidance	N/A	Loss Of Guidance	N/A
Obstacle Avoidance	1	Obstacle Avoidance	1	Obstacle Avoidance	1	Obstacle Avoidance	1	Obstacle Avoidance	1	Obstacle Avoidance	1	Obstacle Avoidance	1	Obstacle Avoidance	1
Output	N/A	Output	N/A	Output	N/A	Output	N/A	Output	N/A	Output	#6 Pin Drop	Output	N/A	Output	N/A
END OF STEP		END OF STEP		END OF STEP		END OF STEP		END OF STEP		END OF STEP		END OF STEP		END OF STEP	
END MODE	Distance	END MODE	Distance	END MODE	Distance	END MODE	Distance	END MODE	Distance	END MODE	Time	END MODE	Distance	END MODE	Distance
END ACTION	Merge	END ACTION	Merge	END ACTION	Merge	END ACTION	Merge	END ACTION	Merge	END ACTION	Merge	END ACTION	Merge	END ACTION	Merge
NEXT ROUTE	4	NEXT ROUTE	4	NEXT ROUTE	4	NEXT ROUTE	4	NEXT ROUTE	4	NEXT ROUTE	4	NEXT ROUTE	4	NEXT ROUTE	4
NEXT STEP	26	NEXT STEP	27	NEXT STEP	28	NEXT STEP	29	NEXT STEP	30	NEXT STEP	31	NEXT STEP	32	NEXT STEP	33

Route 4: 33		Route 4: 34		Route 4: 35		Route 4: 36		Route 4: 37		Route 4: 38		Route 4: 39		Route 4: 40	
STEP INITIATION		STEP INITIATION		STEP INITIATION		STEP INITIATION		STEP INITIATION		STEP INITIATION		STEP INITIATION		STEP INITIATION	
Go Mode	Auto	**Go Mode**	Auto	**Go Mode**	Auto	**Go Mode**	Auto	**Go Mode**	Auto	**Go Mode**	Auto	**Go Mode**	Auto	**Go Mode**	Auto
Radio Input	dio Input 1-	**Radio Input**	dio Input 1-	**Radio Input**	dio Input 1	**Radio Input**	dio Input 1	**Radio Input**	dio Input 1	**Radio Input**	dio Input 1	**Radio Input**	dio Input 1	**Radio Input**	dio Input 1
Hard Wire Input	N/A	**Hard Wire Input**	N/A	**Hard Wire Input**	N/a	**Hard Wire Input**	N/a	**Hard Wire Input**	N/a	**Hard Wire Input**	N/a	**Hard Wire Input**	N/a	**Hard Wire Input**	N/a
BIT	N/A	**BIT**	N/A	**BIT**	N/A	**BIT**	N/A	**BIT**	N/A	**BIT**	N/A	**BIT**	N/A	**BIT**	N/A
STEP ACTION		STEP ACTION		STEP ACTION		STEP ACTION		STEP ACTION		STEP ACTION		STEP ACTION		STEP ACTION	
Function	Forward	**Function**	Forward	**Function**	Rotate	**Function**	Forward	**Function**	Forward	**Function**	Rotate	**Function**	Forward	**Function**	Rotate
Speed	33	**Speed**	33	**Speed**	33	**Speed**	33	**Speed**	33	**Speed**	33	**Speed**	33	**Speed**	33
Navigation	DR	**Navigation**	DR	**Navigation**	DR	**Navigation**	DR	**Navigation**	DR	**Navigation**	DR	**Navigation**	DR	**Navigation**	DR
Direction	Center	**Direction**	Center	**Direction**	Center	**Direction**	Center	**Direction**	Center	**Direction**	Center	**Direction**	Center	**Direction**	Center
Size	4152	**Size**	4152	**Size**	90	**Size**	962	**Size**	962	**Size**	-90	**Size**	525	**Size**	90
Loss Of Guidance	N/A	**Loss Of Guidance**	N/A	**Loss Of Guidance**	N/A	**Loss Of Guidance**	N/A	**Loss Of Guidance**	N/A	**Loss Of Guidance**	N/A	**Loss Of Guidance**	N/A	**Loss Of Guidance**	N/A
Obstacle Avoidance	1	**Obstacle Avoidance**	1	**Obstacle Avoidance**	1	**Obstacle Avoidance**	1	**Obstacle Avoidance**	1	**Obstacle Avoidance**	1	**Obstacle Avoidance**	1	**Obstacle Avoidance**	1
Output	N/A	**Output**	N/A	**Output**	N/a	**Output**	N/a	**Output**	N/a	**Output**	N/a	**Output**	N/a	**Output**	N/a
END OF STEP		END OF STEP		END OF STEP		END OF STEP		END OF STEP		END OF STEP		END OF STEP		END OF STEP	
END MODE	Distance	**END MODE**	Distance	**END MODE**	Distance	**END MODE**	Distance	**END MODE**	Distance	**END MODE**	Distance	**END MODE**	Distance	**END MODE**	Distance
END ACTION	Merge	**END ACTION**	Merge	**END ACTION**	Merge	**END ACTION**	Merge	**END ACTION**	Merge	**END ACTION**	Merge	**END ACTION**	Merge	**END ACTION**	Merge
NEXT ROUTE	4	**NEXT ROUTE**	4	**NEXT ROUTE**	4	**NEXT ROUTE**	4	**NEXT ROUTE**	4	**NEXT ROUTE**	4	**NEXT ROUTE**	4	**NEXT ROUTE**	4
NEXT STEP	**34**	**NEXT STEP**	**35**	**NEXT STEP**	**36**	**NEXT STEP**	**37**	**NEXT STEP**	**38**	**NEXT STEP**	**39**	**NEXT STEP**	**40**	**NEXT STEP**	**41**

Route 4: 41		Route 4: 42		Route 4: 43		Route 0: 1	
STEP INITIATION		STEP INITIATION		STEP INITIATION		STEP INITIATION	
Go Mode	Auto	**Go Mode**	Auto	**Go Mode**	Auto	**Go Mode**	nput Trigge
Radio Input	dio Input 1-	**Radio Input**	dio Input 1-	**Radio Input**	dio Input 1-	**Radio Input**	dio Input 1-
Hard Wire Input	N/a	**Hard Wire Input**	N/a	**Hard Wire Input**	N/a	**Hard Wire Input**	N/a
BIT	N/A	**BIT**	N/A	**BIT**	N/A	**BIT**	BIT #1-#24
STEP ACTION		STEP ACTION		STEP ACTION		STEP ACTION	
Function	Forward	**Function**	Rotate	**Function**	Reverse	**Function**	Auto
Speed	33	**Speed**	33	**Speed**	33	**Speed**	33
Navigation	DR	**Navigation**	DR	**Navigation**	DR	**Navigation**	DR
Direction	Center	**Direction**	Center	**Direction**	Center	**Direction**	Center
Size	417	**Size**	-90	**Size**	66	**Size**	66
Loss Of Guidance	N/A	**Loss Of Guidance**	N/A	**Loss Of Guidance**	N/A	**Loss Of Guidance**	N/A
Obstacle Avoidance	1	**Obstacle Avoidance**	1	**Obstacle Avoidance**	1	**Obstacle Avoidance**	1
Output	N/a	**Output**	N/a	**Output**	N/a	**Output**	N/a
END OF STEP		END OF STEP		END OF STEP		END OF STEP	
END MODE	Distance	**END MODE**	Distance	**END MODE**	Distance	**END MODE**	Distance
END ACTION	Merge	**END ACTION**	Merge	**END ACTION**	Merge	**END ACTION**	Merge
NEXT ROUTE	4	**NEXT ROUTE**	4	**NEXT ROUTE**	0	**NEXT ROUTE**	0
NEXT STEP	**42**	**NEXT STEP**	**43**	**NEXT STEP**	1	**NEXT STEP**	1

Tier 3 Route 5

Route 5: 1		Route 5: 2		Route 5: 3		Route 5: 4		Route 5: 5		Route 5: 6		Route 5: 7		Route 5: 8	
STEP INITIATION		**STEP INITIATION**		**STEP INITIATION**		**STEP INITIATION**		**STEP INITIATION**		**STEP INITIATION**		**STEP INITIATION**		**STEP INITIATION**	
Go Mode	put Trigger	**Go Mode**	Auto	**Go Mode**	Auto	**Go Mode**	Auto	**Go Mode**	Auto	**Go Mode**	Auto	**Go Mode**	Auto	**Go Mode**	Auto
Radio Input	dio Input 1	**Radio Input**	dio Input 1	**Radio Input**	dio Input 1	**Radio Input**	dio Input 1	**Radio Input**	dio Input 1	**Radio Input**	dio Input 1	**Radio Input**	dio Input 1	**Radio Input**	dio Input 1
Hard Wire Input	N/A	**Hard Wire Input**	N/A	**Hard Wire Input**	N/A	**Hard Wire Input**	N/A	**Hard Wire Input**	N/A	**Hard Wire Input**	N/A	**Hard Wire Input**	N/A	**Hard Wire Input**	N/A
BIT	Bit #1 off	**BIT**	N/A	**BIT**	N/A	**BIT**	N/A	**BIT**	N/A	**BIT**	N/A	**BIT**	N/A	**BIT**	N/A
	Bit #8 On														
Home Position RFID	Bit #10 On														
STEP ACTION		**STEP ACTION**		**STEP ACTION**		**STEP ACTION**		**STEP ACTION**		**STEP ACTION**		**STEP ACTION**		**STEP ACTION**	
Function	Dispatch	**Function**	Forward	**Function**	Rotate	**Function**	Forward	**Function**	Rotate	**Function**	Forward	**Function**	Rotate	**Function**	Forward
Speed	N/A	**Speed**	33	**Speed**	33	**Speed**	33	**Speed**	33	**Speed**	33	**Speed**	33	**Speed**	33
Navigation	N/A	**Navigation**	DR	**Navigation**	DR	**Navigation**	DR	**Navigation**	DR	**Navigation**	DR	**Navigation**	DR	**Navigation**	DR
Direction	N/A	**Direction**	Center	**Direction**	Center	**Direction**	Center	**Direction**	Center	**Direction**	Center	**Direction**	Center	**Direction**	Center
Size	N/A	**Size**	66	**Size**	-90	**Size**	417	**Size**	-90	**Size**	525	**Size**	90	**Size**	962
Loss Of Guidance	N/A	**Loss Of Guidance**	N/A	**Loss Of Guidance**	N/A	**Loss Of Guidance**	N/A	**Loss Of Guidance**	N/A	**Loss Of Guidance**	N/A	**Loss Of Guidance**	N/A	**Loss Of Guidance**	N/A
Obstacle Avoidance	N/A	**Obstacle Avoidance**	1	**Obstacle Avoidance**	1	**Obstacle Avoidance**	1	**Obstacle Avoidance**	1	**Obstacle Avoidance**	1	**Obstacle Avoidance**	1	**Obstacle Avoidance**	1
Output	N/A	**Output**	N/A	**Output**	N/A	**Output**	N/A	**Output**	N/A	**Output**	N/A	**Output**	N/A	**Output**	N/A
END OF STEP		**END OF STEP**		**END OF STEP**		**END OF STEP**		**END OF STEP**		**END OF STEP**		**END OF STEP**		**END OF STEP**	
END MODE	N/A	**END MODE**	Distance	**END MODE**	Distance	**END MODE**	Distance	**END MODE**	Distance	**END MODE**	Distance	**END MODE**	Distance	**END MODE**	Distance
END ACTION	e Bit #8, #1	**END ACTION**	Merge	**END ACTION**	Merge	**END ACTION**	Merge	**END ACTION**	Merge	**END ACTION**	Merge	**END ACTION**	Merge	**END ACTION**	Merge
NEXT ROUTE	5	**NEXT ROUTE**	5	**NEXT ROUTE**	5	**NEXT ROUTE**	5	**NEXT ROUTE**	5	**NEXT ROUTE**	5	**NEXT ROUTE**	5	**NEXT ROUTE**	5
NEXT STEP	**2**	**NEXT STEP**	**3**	**NEXT STEP**	**4**	**NEXT STEP**	**5**	**NEXT STEP**	**6**	**NEXT STEP**	**7**	**NEXT STEP**	**8**	**NEXT STEP**	**9**

Route 5: 9		Route 5: 10		Route 5: 11		Route 5: 12		Route 5: 13		Route 5: 14		Route 5: 15		Route 5: 16	
STEP INITIATION		**STEP INITIATION**		**STEP INITIATION**		**STEP INITIATION**		**STEP INITIATION**		**STEP INITIATION**		**STEP INITIATION**		**STEP INITIATION**	
Go Mode	Auto	**Go Mode**	Auto	**Go Mode**	Auto	**Go Mode**	Auto	**Go Mode**	Auto	**Go Mode**	Auto	**Go Mode**	Auto	**Go Mode**	Auto
Radio Input	dio Input 1	**Radio Input**	dio Input 1	**Radio Input**	dio Input 1	**Radio Input**	dio Input 1	**Radio Input**	dio Input 1	**Radio Input**	dio Input 1	**Radio Input**	dio Input 1	**Radio Input**	dio Input 1
Hard Wire Input	N/A	**Hard Wire Input**	N/A	**Hard Wire Input**	N/A	**Hard Wire Input**	N/A	**Hard Wire Input**	Cart prese	**Hard Wire Input**	N/A	**Hard Wire Input**	N/A	**Hard Wire Input**	N/A
BIT	N/A	**BIT**	N/A	**BIT**	N/A	**BIT**	N/A	**BIT**	N/A	**BIT**	N/A	**BIT**	N/A	**BIT**	N/A
STEP ACTION		**STEP ACTION**		**STEP ACTION**		**STEP ACTION**		**STEP ACTION**		**STEP ACTION**		**STEP ACTION**		**STEP ACTION**	
Function	Rotate	**Function**	Forward	**Function**	Rotate	**Function**	Reverse	**Function**	Forward	**Function**	Rotate	**Function**	Forward	**Function**	Rotate
Speed	33	**Speed**	33	**Speed**	33	**Speed**	33	**Speed**	33	**Speed**	33	**Speed**	33	**Speed**	33
Navigation	DR	**Navigation**	DR	**Navigation**	DR	**Navigation**	DR	**Navigation**	DR	**Navigation**	DR	**Navigation**	DR	**Navigation**	DR
Direction	Center	**Direction**	Center	**Direction**	Center	**Direction**	Center	**Direction**	Center	**Direction**	Center	**Direction**	Center	**Direction**	Center
Size	-90	**Size**	4213	**Size**	-90	**Size**	109	**Size**	109	**Size**	-90	**Size**	2298	**Size**	90
Loss Of Guidance	N/A	**Loss Of Guidance**	N/A	**Loss Of Guidance**	N/A	**Loss Of Guidance**	N/A	**Loss Of Guidance**	N/A	**Loss Of Guidance**	N/A	**Loss Of Guidance**	N/A	**Loss Of Guidance**	N/A
Obstacle Avoidance	1	**Obstacle Avoidance**	1	**Obstacle Avoidance**	1	**Obstacle Avoidance**	1	**Obstacle Avoidance**	1	**Obstacle Avoidance**	1	**Obstacle Avoidance**	1	**Obstacle Avoidance**	1
Output	N/A	**Output**	N/A	**Output**	N/A	**Output**	#6 pin up	**Output**	N/A	**Output**	N/A	**Output**	N/A	**Output**	N/A
END OF STEP		**END OF STEP**		**END OF STEP**		**END OF STEP**		**END OF STEP**		**END OF STEP**		**END OF STEP**		**END OF STEP**	
END MODE	Distance	**END MODE**	Distance	**END MODE**	Distance	**END MODE**	Distance	**END MODE**	Distance	**END MODE**	Distance	**END MODE**	Distance	**END MODE**	Distance
END ACTION	Merge	**END ACTION**	Merge	**END ACTION**	Merge	**END ACTION**	Merge	**END ACTION**	Merge	**END ACTION**	Merge	**END ACTION**	Merge	**END ACTION**	Merge
NEXT ROUTE	5	**NEXT ROUTE**	5	**NEXT ROUTE**	5	**NEXT ROUTE**	5	**NEXT ROUTE**	5	**NEXT ROUTE**	5	**NEXT ROUTE**	5	**NEXT ROUTE**	5
NEXT STEP	**10**	**NEXT STEP**	**11**	**NEXT STEP**	**12**	**NEXT STEP**	**13**	**NEXT STEP**	**14**	**NEXT STEP**	**15**	**NEXT STEP**	**16**	**NEXT STEP**	**17**

Route 5: 17		Route 5: 18		Route 5: 19		Route 5: 20		Route 5: 21		Route 5: 22		Route 5: 23		Route 5: 24	
STEP INITIATION		**STEP INITIATION**		**STEP INITIATION**		**STEP INITIATION**		**STEP INITIATION**		**STEP INITIATION**		**STEP INITIATION**		**STEP INITIATION**	
Go Mode	Auto	**Go Mode**	Auto	**Go Mode**	Auto	**Go Mode**	Auto	**Go Mode**	Auto	**Go Mode**	Auto	**Go Mode**	Auto	**Go Mode**	Auto
Radio Input	dio Input 1	**Radio Input**	dio Input 1	**Radio Input**	dio Input 1	**Radio Input**	dio Input 1	**Radio Input**	dio Input 1	**Radio Input**	dio Input 1	**Radio Input**	dio Input 1	**Radio Input**	dio Input 1
Hard Wire Input	N/A	**Hard Wire Input**	N/A	**Hard Wire Input**	N/A	**Hard Wire Input**	N/A	**Hard Wire Input**	N/A	**Hard Wire Input**	N/A	**Hard Wire Input**	N/A	**Hard Wire Input**	N/A
BIT	N/A	**BIT**	N/A	**BIT**	N/A	**BIT**	N/A	**BIT**	N/A	**BIT**	N/A	**BIT**	N/A	**BIT**	N/A
STEP ACTION		**STEP ACTION**		**STEP ACTION**		**STEP ACTION**		**STEP ACTION**		**STEP ACTION**		**STEP ACTION**		**STEP ACTION**	
Function	Forward	**Function**	Rotate	**Function**	Forward	**Function**	Rotate	**Function**	Forward	**Function**	Rotate	**Function**	Forward	**Function**	Rotate
Speed	33	**Speed**	33	**Speed**	33	**Speed**	33	**Speed**	33	**Speed**	33	**Speed**	33	**Speed**	33
Navigation	DR	**Navigation**	DR	**Navigation**	DR	**Navigation**	DR	**Navigation**	DR	**Navigation**	DR	**Navigation**	DR	**Navigation**	DR
Direction	Center	**Direction**	Center	**Direction**	Center	**Direction**	Center	**Direction**	Center	**Direction**	Center	**Direction**	Center	**Direction**	Center
Size	1007	**Size**	90	**Size**	657	**Size**	90	**Size**	403	**Size**	-90	**Size**	115	**Size**	-90
Loss Of Guidance	N/A	**Loss Of Guidance**	N/A	**Loss Of Guidance**	N/A	**Loss Of Guidance**	N/A	**Loss Of Guidance**	N/A	**Loss Of Guidance**	N/A	**Loss Of Guidance**	N/A	**Loss Of Guidance**	N/A
Obstacle Avoidance	1	**Obstacle Avoidance**	1	**Obstacle Avoidance**	1	**Obstacle Avoidance**	1	**Obstacle Avoidance**	1	**Obstacle Avoidance**	1	**Obstacle Avoidance**	1	**Obstacle Avoidance**	1
Output	N/A	**Output**	N/A	**Output**	N/A	**Output**	N/A	**Output**	N/A	**Output**	N/A	**Output**	N/A	**Output**	N/A
END OF STEP		**END OF STEP**		**END OF STEP**		**END OF STEP**		**END OF STEP**		**END OF STEP**		**END OF STEP**		**END OF STEP**	
END MODE	Distance	**END MODE**	Distance	**END MODE**	Distance	**END MODE**	Distance	**END MODE**	Distance	**END MODE**	Distance	**END MODE**	Distance	**END MODE**	Distance
END ACTION	Merge	**END ACTION**	Merge	**END ACTION**	Merge	**END ACTION**	Merge	**END ACTION**	Merge	**END ACTION**	Merge	**END ACTION**	Merge	**END ACTION**	Merge
NEXT ROUTE	5	**NEXT ROUTE**	5	**NEXT ROUTE**	5	**NEXT ROUTE**	5	**NEXT ROUTE**	5	**NEXT ROUTE**	5	**NEXT ROUTE**	5	**NEXT ROUTE**	5
NEXT STEP	**18**	**NEXT STEP**	**19**	**NEXT STEP**	**20**	**NEXT STEP**	**21**	**NEXT STEP**	**22**	**NEXT STEP**	**23**	**NEXT STEP**	**24**	**NEXT STEP**	**25**

Route 5: 25		Route 5: 26		Route 5: 27		Route 5: 28		Route 5: 29		Route 5: 30		Route 5: 31		Route 5: 32	
STEP INITIATION		**STEP INITIATION**		**STEP INITIATION**		**STEP INITIATION**		**STEP INITIATION**		**STEP INITIATION**		**STEP INITIATION**		**STEP INITIATION**	
Go Mode	Auto	**Go Mode**	Auto	**Go Mode**	Auto	**Go Mode**	Auto	**Go Mode**	Auto	**Go Mode**	Auto	**Go Mode**	Auto	**Go Mode**	Auto
Radio Input	dio Input 1	**Radio Input**	dio Input 1	**Radio Input**	dio Input 1	**Radio Input**	dio Input 1	**Radio Input**	dio Input 1	**Radio Input**	dio Input 1	**Radio Input**	dio Input 1	**Radio Input**	dio Input 1
Hard Wire Input	N/A	**Hard Wire Input**	N/A	**Hard Wire Input**	N/A	**Hard Wire Input**	N/A	**Hard Wire Input**	N/A	**Hard Wire Input**	N/A	**Hard Wire Input**	N/A	**Hard Wire Input**	N/A
BIT	N/A	**BIT**	N/A	**BIT**	N/A	**BIT**	N/A	**BIT**	N/A	**BIT**	N/A	**BIT**	N/A	**BIT**	N/A
STEP ACTION		**STEP ACTION**		**STEP ACTION**		**STEP ACTION**		**STEP ACTION**		**STEP ACTION**		**STEP ACTION**		**STEP ACTION**	
Function	Reverse	**Function**	Delay	**Function**	Forward	**Function**	Rotate	**Function**	Forward	**Function**	Rotate	**Function**	Forward	**Function**	Rotate
Speed	33	**Speed**	33	**Speed**	33	**Speed**	33	**Speed**	33	**Speed**	33	**Speed**	33	**Speed**	33
Navigation	DR	**Navigation**	DR	**Navigation**	DR	**Navigation**	DR	**Navigation**	DR	**Navigation**	DR	**Navigation**	DR	**Navigation**	DR
Direction	Center	**Direction**	Center	**Direction**	Center	**Direction**	Center	**Direction**	Center	**Direction**	Center	**Direction**	Center	**Direction**	Center
Size	79	**Size**	5	**Size**	79	**Size**	-90	**Size**	115	**Size**	90	**Size**	403	**Size**	-90
Loss Of Guidance	N/A	**Loss Of Guidance**	N/A	**Loss Of Guidance**	N/A	**Loss Of Guidance**	N/A	**Loss Of Guidance**	N/A	**Loss Of Guidance**	N/A	**Loss Of Guidance**	N/A	**Loss Of Guidance**	N/A
Obstacle Avoidance	1	**Obstacle Avoidance**	1	**Obstacle Avoidance**	1	**Obstacle Avoidance**	1	**Obstacle Avoidance**	1	**Obstacle Avoidance**	1	**Obstacle Avoidance**	1	**Obstacle Avoidance**	1
Output	N/A	**Output**	N/A	**Output**	N/A	**Output**	N/A	**Output**	N/A	**Output**	N/A	**Output**	N/A	**Output**	N/A
END OF STEP		**END OF STEP**		**END OF STEP**		**END OF STEP**		**END OF STEP**		**END OF STEP**		**END OF STEP**		**END OF STEP**	
END MODE	Distance	**END MODE**	Time	**END MODE**	Distance	**END MODE**	Distance	**END MODE**	Distance	**END MODE**	Distance	**END MODE**	Distance	**END MODE**	Distance
END ACTION	Merge	**END ACTION**	Merge	**END ACTION**	Merge	**END ACTION**	Merge	**END ACTION**	Merge	**END ACTION**	Merge	**END ACTION**	Merge	**END ACTION**	Merge
NEXT ROUTE	5	**NEXT ROUTE**	5	**NEXT ROUTE**	5	**NEXT ROUTE**	5	**NEXT ROUTE**	5	**NEXT ROUTE**	5	**NEXT ROUTE**	5	**NEXT ROUTE**	5
NEXT STEP	**26**	**NEXT STEP**	**27**	**NEXT STEP**	**28**	**NEXT STEP**	**29**	**NEXT STEP**	**30**	**NEXT STEP**	**31**	**NEXT STEP**	**32**	**NEXT STEP**	**33**

Route 5: 33		Route 5: 34		Route 5: 35		Route 5: 36		Route 5: 37		Route 5: 38		Route 5: 39		Route 5: 40	
STEP INITIATION		STEP INITIATION		STEP INITIATION		STEP INITIATION		STEP INITIATION		STEP INITIATION		STEP INITIATION		STEP INITIATION	
Go Mode	Auto	**Go Mode**	Auto	**Go Mode**	Auto	**Go Mode**	Auto	**Go Mode**	Auto	**Go Mode**	Auto	**Go Mode**	Auto	**Go Mode**	Auto
Radio Input	dio Input 1	**Radio Input**	dio Input 1	**Radio Input**	dio Input 1	**Radio Input**	dio Input 1	**Radio Input**	dio Input 1	**Radio Input**	dio Input 1	**Radio Input**	dio Input 1	**Radio Input**	dio Input 1
Hard Wire Input	N/A	**Hard Wire Input**	N/A	**Hard Wire Input**	N/A	**Hard Wire Input**	N/A	**Hard Wire Input**	N/A	**Hard Wire Input**	N/a	**Hard Wire Input**	N/a	**Hard Wire Input**	N/a
BIT	N/A	**BIT**	N/A	**BIT**	N/A	**BIT**	N/A	**BIT**	N/A	**BIT**	N/A	**BIT**	N/A	**BIT**	N/A
STEP ACTION		STEP ACTION		STEP ACTION		STEP ACTION		STEP ACTION		STEP ACTION		STEP ACTION		STEP ACTION	
Function	Forward	**Function**	Rotate	**Function**	Forward	**Function**	Rotate	**Function**	Forward	**Function**	Rotate	**Function**	Forward	**Function**	Forward
Speed	33	**Speed**	33	**Speed**	33	**Speed**	33	**Speed**	33	**Speed**	33	**Speed**	33	**Speed**	33
Navigation	DR	**Navigation**	DR	**Navigation**	DR	**Navigation**	DR	**Navigation**	DR	**Navigation**	DR	**Navigation**	DR	**Navigation**	DR
Direction	Center	**Direction**	Center	**Direction**	Center	**Direction**	Center	**Direction**	Center	**Direction**	Center	**Direction**	Center	**Direction**	Center
Size	657	**Size**	-90	**Size**	1007	**Size**	90	**Size**	1915	**Size**	90	**Size**	962	**Size**	962
Loss Of Guidance	N/A	**Loss Of Guidance**	N/A	**Loss Of Guidance**	N/A	**Loss Of Guidance**	N/A	**Loss Of Guidance**	N/A	**Loss Of Guidance**	N/A	**Loss Of Guidance**	N/A	**Loss Of Guidance**	N/A
Obstacle Avoidance	1	**Obstacle Avoidance**	1	**Obstacle Avoidance**	1	**Obstacle Avoidance**	1	**Obstacle Avoidance**	1	**Obstacle Avoidance**	1	**Obstacle Avoidance**	1	**Obstacle Avoidance**	1
Output	N/A	**Output**	N/A	**Output**	N/A	**Output**	N/A	**Output**	N/A	**Output**	N/a	**Output**	N/a	**Output**	N/a
END OF STEP		END OF STEP		END OF STEP		END OF STEP		END OF STEP		END OF STEP		END OF STEP		END OF STEP	
END MODE	Distance	**END MODE**	Distance	**END MODE**	Distance	**END MODE**	Distance	**END MODE**	Distance	**END MODE**	Distance	**END MODE**	Distance	**END MODE**	Distance
END ACTION	Merge	**END ACTION**	Merge	**END ACTION**	Merge	**END ACTION**	Merge	**END ACTION**	Merge	**END ACTION**	Merge	**END ACTION**	Merge	**END ACTION**	Merge
NEXT ROUTE	5	**NEXT ROUTE**	5	**NEXT ROUTE**	5	**NEXT ROUTE**	5	**NEXT ROUTE**	5	**NEXT ROUTE**	5	**NEXT ROUTE**	5	**NEXT ROUTE**	5
NEXT STEP	**34**	**NEXT STEP**	**35**	**NEXT STEP**	**36**	**NEXT STEP**	**37**	**NEXT STEP**	**38**	**NEXT STEP**	**39**	**NEXT STEP**	**40**	**NEXT STEP**	**41**

Route 5: 41		Route 5: 42		Route 5: 43		Route 5: 44		Route 5: 45		Route 5: 46		Route 0: 1	
STEP INITIATION		STEP INITIATION		STEP INITIATION		STEP INITIATION		STEP INITIATION		STEP INITIATION		STEP INITIATION	
Go Mode	Auto	**Go Mode**	Auto	**Go Mode**	Auto	**Go Mode**	Auto	**Go Mode**	Auto	**Go Mode**	Auto	**Go Mode**	nput Trigge
Radio Input	dio Input 1-	**Radio Input**	dio Input 1-	**Radio Input**	dio Input 1-	**Radio Input**	dio Input 1-	**Radio Input**	dio Input 1-	**Radio Input**	dio Input 1-	**Radio Input**	dio Input 1-
Hard Wire Input	N/a	**Hard Wire Input**	N/a	**Hard Wire Input**	N/a	**Hard Wire Input**	N/a	**Hard Wire Input**	N/a	**Hard Wire Input**	N/a	**Hard Wire Input**	N/a
BIT	N/A	**BIT**	N/A	**BIT**	N/A	**BIT**	N/A	**BIT**	N/A	**BIT**	N/A	**BIT**	BIT #1-#24
STEP ACTION		STEP ACTION		STEP ACTION		STEP ACTION		STEP ACTION		STEP ACTION		STEP ACTION	
Function	Rotate	**Function**	Forward	**Function**	Rotate	**Function**	Forward	**Function**	Rotate	**Function**	Reverse	**Function**	Auto
Speed	33	**Speed**	33	**Speed**	33	**Speed**	33	**Speed**	33	**Speed**	33	**Speed**	33
Navigation	DR	**Navigation**	DR	**Navigation**	DR	**Navigation**	DR	**Navigation**	DR	**Navigation**	DR	**Navigation**	DR
Direction	Center	**Direction**	Center	**Direction**	Center	**Direction**	Center	**Direction**	Center	**Direction**	Center	**Direction**	Center
Size	-90	**Size**	525	**Size**	90	**Size**	417	**Size**	-90	**Size**	66	**Size**	66
Loss Of Guidance	N/A	**Loss Of Guidance**	N/A	**Loss Of Guidance**	N/A	**Loss Of Guidance**	N/A	**Loss Of Guidance**	N/A	**Loss Of Guidance**	N/A	**Loss Of Guidance**	N/A
Obstacle Avoidance	1	**Obstacle Avoidance**	1	**Obstacle Avoidance**	1	**Obstacle Avoidance**	1	**Obstacle Avoidance**	1	**Obstacle Avoidance**	1	**Obstacle Avoidance**	1
Output	N/a	**Output**	N/a	**Output**	N/a	**Output**	N/a	**Output**	N/a	**Output**	N/a	**Output**	N/a
END OF STEP		END OF STEP		END OF STEP		END OF STEP		END OF STEP		END OF STEP		END OF STEP	
END MODE	Distance	**END MODE**	Distance	**END MODE**	Distance	**END MODE**	Distance	**END MODE**	Distance	**END MODE**	Distance	**END MODE**	Distance
END ACTION	Merge	**END ACTION**	Merge	**END ACTION**	Merge	**END ACTION**	Merge	**END ACTION**	Merge	**END ACTION**	Merge	**END ACTION**	Merge
NEXT ROUTE	5	**NEXT ROUTE**	5	**NEXT ROUTE**	5	**NEXT ROUTE**	5	**NEXT ROUTE**	5	**NEXT ROUTE**	0	**NEXT ROUTE**	0
NEXT STEP	**42**	**NEXT STEP**	**43**	**NEXT STEP**	**44**	**NEXT STEP**	**45**	**NEXT STEP**	**46**	**NEXT STEP**	1	**NEXT STEP**	1

Tier 3 Route 6

Route 6:1		Route 6:2		Route 6:3		Route 6:4		Route 6:5		Route 6:6		Route 6:7		Route 6:8	
STEP INITIATION		**STEP INITIATION**		**STEP INITIATION**		**STEP INITIATION**		**STEP INITIATION**		**STEP INITIATION**		**STEP INITIATION**		**STEP INITIATION**	
Go Mode	nput Triggers	**Go Mode**	Auto	**Go Mode**	Auto	**Go Mode**	Auto	**Go Mode**	Auto	**Go Mode**	Auto	**Go Mode**	Auto	**Go Mode**	Auto
Radio Input	adio Input 1-2	**Radio Input**	dio Input 1-	**Radio Input**	dio Input 1-	**Radio Input**	dio Input 1-	**Radio Input**	dio Input 1-	**Radio Input**	dio Input 1-	**Radio Input**	dio Input 1-	**Radio Input**	dio Input 1-
Hard Wire Input	N/A	**Hard Wire Input**	N/A	**Hard Wire Input**	N/A	**Hard Wire Input**	N/A	**Hard Wire Input**	N/A	**Hard Wire Input**	N/A	**Hard Wire Input**	N/A	**Hard Wire Input**	N/A
BIT	Bit #1 off	**BIT**	N/A	**BIT**	N/A	**BIT**	N/A	**BIT**	N/A	**BIT**	N/A	**BIT**	N/A	**BIT**	N/A
Bit#11 On, #13 On	it #5 and 6 Off														
Home Position RFID	it #7 and 9 of														
	t #8 and 10 o														
STEP ACTION		**STEP ACTION**		**STEP ACTION**		**STEP ACTION**		**STEP ACTION**		**STEP ACTION**		**STEP ACTION**		**STEP ACTION**	
Function	Dispatch	**Function**	Forward	**Function**	Rotate	**Function**	Forward	**Function**	Rotate	**Function**	Forward	**Function**	Rotate	**Function**	Forward
Speed	N/A	**Speed**	33	**Speed**	33	**Speed**	33	**Speed**	33	**Speed**	33	**Speed**	33	**Speed**	33
Navigation	N/A	**Navigation**	DR	**Navigation**	DR	**Navigation**	DR	**Navigation**	DR	**Navigation**	DR	**Navigation**	DR	**Navigation**	DR
Direction	N/A	**Direction**	Center	**Direction**	Center	**Direction**	Center	**Direction**	Center	**Direction**	Center	**Direction**	Center	**Direction**	Center
Size	N/A	**Size**	66	**Size**	-90	**Size**	417	**Size**	-90	**Size**	525	**Size**	90	**Size**	962
Loss Of Guidance	N/A	**Loss Of Guidance**	N/A	**Loss Of Guidance**	N/A	**Loss Of Guidance**	N/A	**Loss Of Guidance**	N/A	**Loss Of Guidance**	N/A	**Loss Of Guidance**	N/A	**Loss Of Guidance**	N/A
Obstacle Avoidance	N/A	**Obstacle Avoidance**	1	**Obstacle Avoidance**	1	**Obstacle Avoidance**	1	**Obstacle Avoidance**	1	**Obstacle Avoidance**	1	**Obstacle Avoidance**	1	**Obstacle Avoidance**	1
Output	N/A	**Output**	N/A	**Output**	N/A	**Output**	N/A	**Output**	N/A	**Output**	N/A	**Output**	N/A	**Output**	N/A
END OF STEP		**END OF STEP**		**END OF STEP**		**END OF STEP**		**END OF STEP**		**END OF STEP**		**END OF STEP**		**END OF STEP**	
END MODE	N/A	**END MODE**	Distance	**END MODE**	Distance	**END MODE**	Distance	**END MODE**	Distance	**END MODE**	Distance	**END MODE**	Distance	**END MODE**	Distance
END ACTION	e Bit #11, #1	**END ACTION**	Merge	**END ACTION**	Merge	**END ACTION**	Merge	**END ACTION**	Merge	**END ACTION**	Merge	**END ACTION**	Merge	**END ACTION**	Merge
NEXT ROUTE	6	**NEXT ROUTE**	6	**NEXT ROUTE**	6	**NEXT ROUTE**	6	**NEXT ROUTE**	6	**NEXT ROUTE**	6	**NEXT ROUTE**	6	**NEXT ROUTE**	6
NEXT STEP	**2**	**NEXT STEP**	**3**	**NEXT STEP**	**4**	**NEXT STEP**	**5**	**NEXT STEP**	**6**	**NEXT STEP**	**7**	**NEXT STEP**	**8**	**NEXT STEP**	**9**

Route 6:9		Route 6:10		Route 6:11		Route 6:12		Route 6:13		Route 6:14		Route 6:15		Route 6:16	
STEP INITIATION		**STEP INITIATION**		**STEP INITIATION**		**STEP INITIATION**		**STEP INITIATION**		**STEP INITIATION**		**STEP INITIATION**		**STEP INITIATION**	
Go Mode	Auto	**Go Mode**	Auto	**Go Mode**	Auto	**Go Mode**	Auto	**Go Mode**	Auto	**Go Mode**	Auto	**Go Mode**	Auto	**Go Mode**	Auto
Radio Input	dio Input 1-	**Radio Input**	dio Input 1-	**Radio Input**	dio Input 1-	**Radio Input**	dio Input 1-	**Radio Input**	dio Input 1-	**Radio Input**	dio Input 1-	**Radio Input**	dio Input 1-	**Radio Input**	dio Input 1-
Hard Wire Input	N/A	**Hard Wire Input**	N/A	**Hard Wire Input**	N/A	**Hard Wire Input**	N/A	**Hard Wire Input**	N/A	**Hard Wire Input**	N/A	**Hard Wire Input**	N/A	**Hard Wire Input**	N/A
BIT	N/A	**BIT**	N/A	**BIT**	N/A	**BIT**	N/A	**BIT**	N/A	**BIT**	N/A	**BIT**	N/A	**BIT**	N/A
STEP ACTION		**STEP ACTION**		**STEP ACTION**		**STEP ACTION**		**STEP ACTION**		**STEP ACTION**		**STEP ACTION**		**STEP ACTION**	
Function	Rotate	**Function**	Forward	**Function**	Rotate	**Function**	Forward	**Function**	Rotate	**Function**	Forward	**Function**	Rotate	**Function**	Reverse
Speed	33	**Speed**	33	**Speed**	33	**Speed**	33	**Speed**	33	**Speed**	33	**Speed**	33	**Speed**	33
Navigation	DR	**Navigation**	DR	**Navigation**	DR	**Navigation**	DR	**Navigation**	DR	**Navigation**	DR	**Navigation**	DR	**Navigation**	DR
Direction	Center	**Direction**	Center	**Direction**	Center	**Direction**	Center	**Direction**	Center	**Direction**	Center	**Direction**	Center	**Direction**	Center
Size	-90	**Size**	2284	**Size**	90	**Size**	331	**Size**	90	**Size**	144	**Size**	-90	**Size**	62
Loss Of Guidance	N/A	**Loss Of Guidance**	N/A	**Loss Of Guidance**	N/A	**Loss Of Guidance**	N/A	**Loss Of Guidance**	N/A	**Loss Of Guidance**	N/A	**Loss Of Guidance**	N/A	**Loss Of Guidance**	N/A
Obstacle Avoidance	1	**Obstacle Avoidance**	1	**Obstacle Avoidance**	1	**Obstacle Avoidance**	1	**Obstacle Avoidance**	1	**Obstacle Avoidance**	1	**Obstacle Avoidance**	1	**Obstacle Avoidance**	1
Output	N/A	**Output**	N/A	**Output**	N/A	**Output**	N/A	**Output**	N/A	**Output**	N/A	**Output**	N/A	**Output**	#6 Pin Up
END OF STEP		**END OF STEP**		**END OF STEP**		**END OF STEP**		**END OF STEP**		**END OF STEP**		**END OF STEP**		**END OF STEP**	
END MODE	Distance	**END MODE**	Distance	**END MODE**	Distance	**END MODE**	Distance	**END MODE**	Distance	**END MODE**	Distance	**END MODE**	Distance	**END MODE**	Distance
END ACTION	Merge	**END ACTION**	Merge	**END ACTION**	Merge	**END ACTION**	Merge	**END ACTION**	Merge	**END ACTION**	Merge	**END ACTION**	Merge	**END ACTION**	Merge
NEXT ROUTE	6	**NEXT ROUTE**	6	**NEXT ROUTE**	6	**NEXT ROUTE**	6	**NEXT ROUTE**	6	**NEXT ROUTE**	6	**NEXT ROUTE**	6	**NEXT ROUTE**	6
NEXT STEP	**10**	**NEXT STEP**	**11**	**NEXT STEP**	**12**	**NEXT STEP**	**13**	**NEXT STEP**	**14**	**NEXT STEP**	**15**	**NEXT STEP**	**16**	**NEXT STEP**	**17**

Route 6:17		Route 6:18		Route 6:19		Route 6:20		Route 6:21		Route 6:22		Route 6:23		Route 6:24	
STEP INITIATION		**STEP INITIATION**		**STEP INITIATION**		**STEP INITIATION**		**STEP INITIATION**		**STEP INITIATION**		**STEP INITIATION**		**STEP INITIATION**	
Go Mode	Auto	**Go Mode**	Auto	**Go Mode**	Auto	**Go Mode**	Auto	**Go Mode**	Auto	**Go Mode**	Auto	**Go Mode**	Auto	**Go Mode**	Auto
Radio Input	dio Input 1-	**Radio Input**	dio Input 1-	**Radio Input**	dio Input 1-	**Radio Input**	dio Input 1-	**Radio Input**	dio Input 1-	**Radio Input**	dio Input 1-	**Radio Input**	dio Input 1-	**Radio Input**	dio Input 1-
Hard Wire Input	N/A	**Hard Wire Input**	N/A	**Hard Wire Input**	N/A	**Hard Wire Input**	N/A	**Hard Wire Input**	N/A	**Hard Wire Input**	N/A	**Hard Wire Input**	N/A	**Hard Wire Input**	N/A
BIT	N/A	**BIT**	N/A	**BIT**	N/A	**BIT**	N/A	**BIT**	N/A	**BIT**	N/A	**BIT**	N/A	**BIT**	N/A
STEP ACTION		**STEP ACTION**		**STEP ACTION**		**STEP ACTION**		**STEP ACTION**		**EP ACTION**		**STEP ACTION**		**STEP ACTION**	
Function	Forward	**Function**	Rotate	**Function**	Forward	**Function**	Rotate	**Function**	Forward	**Function**	Rotate	**Function**	Forward	**Function**	Rotate
Speed	33	**Speed**	33	**Speed**	33	**Speed**	33	**Speed**	33	**Speed**	33	**Speed**	33	**Speed**	33
Navigation	DR	**Navigation**	DR	**Navigation**	DR	**Navigation**	DR	**Navigation**	DR	**Navigation**	DR	**Navigation**	DR	**Navigation**	DR
Direction	Center	**Direction**	Center	**Direction**	Center	**Direction**	Center	**Direction**	Center	**Direction**	Center	**Direction**	Center	**Direction**	Center
Size	62	**Size**	-90	**Size**	144	**Size**	-90	**Size**	331	**Size**	-90	**Size**	2284	**Size**	90
Loss Of Guidance	N/A	**Loss Of Guidance**	N/A	**Loss Of Guidance**	N/A	**Loss Of Guidance**	N/A	**Loss Of Guidance**	N/A	**Loss Of Guidance**	N/A	**Loss Of Guidance**	N/A	**Loss Of Guidance**	N/A
Obstacle Avoidance	1	**Obstacle Avoidance**	1	**Obstacle Avoidance**	1	**Obstacle Avoidance**	1	**Obstacle Avoidance**	1	**Obstacle Avoidance**	1	**Obstacle Avoidance**	1	**Obstacle Avoidance**	1
Output	N/A	**Output**	N/A	**Output**	N/A	**Output**	N/A	**Output**	N/A	**Output**	N/A	**Output**	N/A	**Output**	N/A
END OF STEP		**END OF STEP**		**END OF STEP**		**END OF STEP**		**END OF STEP**		**ID OF STEP**		**END OF STEP**		**END OF STEP**	
END MODE	Distance	**END MODE**	Distance	**END MODE**	Distance	**END MODE**	Distance	**END MODE**	Distance	**END MODE**	Distance	**END MODE**	Distance	**END MODE**	Distance
END ACTION	Merge	**END ACTION**	Merge	**END ACTION**	Merge	**END ACTION**	Merge	**END ACTION**	Merge	**END ACTION**	Merge	**END ACTION**	Merge	**END ACTION**	Merge
NEXT ROUTE	6	**NEXT ROUTE**	6	**NEXT ROUTE**	6	**NEXT ROUTE**	6	**NEXT ROUTE**	6	**NEXT ROUTE**	6	**NEXT ROUTE**	6	**NEXT ROUTE**	6
NEXT STEP	**18**	**NEXT STEP**	**19**	**NEXT STEP**	**20**	**NEXT STEP**	**21**	**NEXT STEP**	**22**	**NEXT STEP**	**23**	**NEXT STEP**	**24**	**NEXT STEP**	**25**

Route 6:25		Route 6:26		Route 6:27		Route 6:28		Route 6:29		Route 6:30		Route 6:31		Route 6:32	
STEP INITIATION		**STEP INITIATION**		**STEP INITIATION**		**STEP INITIATION**		**STEP INITIATION**		**STEP INITIATION**		**STEP INITIATION**		**STEP INITIATION**	
Go Mode	Auto	**Go Mode**	Auto	**Go Mode**	Auto	**Go Mode**	Auto	**Go Mode**	Auto	**Go Mode**	Auto	**Go Mode**	Auto	**Go Mode**	Auto
Radio Input	dio Input 1-	**Radio Input**	dio Input 1-	**Radio Input**	dio Input 1-	**Radio Input**	dio Input 1-	**Radio Input**	dio Input 1-	**Radio Input**	dio Input 1-	**Radio Input**	dio Input 1-	**Radio Input**	dio Input 1-
Hard Wire Input	N/A	**Hard Wire Input**	N/A	**Hard Wire Input**	N/A	**Hard Wire Input**	N/A	**Hard Wire Input**	N/A	**Hard Wire Input**	N/A	**Hard Wire Input**	N/A	**Hard Wire Input**	Cart prese
BIT	N/A	**BIT**	N/A	**BIT**	N/A	**BIT**	N/A	**BIT**	N/A	**BIT**	N/A	**BIT**	N/A	**BIT**	N/A
STEP ACTION		**STEP ACTION**		**STEP ACTION**		**STEP ACTION**		**STEP ACTION**		**STEP ACTION**		**STEP ACTION**		**STEP ACTION**	
Function	Forward	**Function**	Rotate	**Function**	Reverse	**Function**	Delay	**Function**	Forward	**Function**	Rotate	**Function**	Reverse	**Function**	Forward
Speed	33	**Speed**	33	**Speed**	33	**Speed**	33	**Speed**	33	**Speed**	33	**Speed**	33	**Speed**	33
Navigation	DR	**Navigation**	DR	**Navigation**	DR	**Navigation**	DR	**Navigation**	DR	**Navigation**	DR	**Navigation**	DR	**Navigation**	DR
Direction	Center	**Direction**	Center	**Direction**	Center	**Direction**	Center	**Direction**	Center	**Direction**	Center	**Direction**	Center	**Direction**	Center
Size	1240	**Size**	90	**Size**	279	**Size**	5	**Size**	104	**Size**	-90	**Size**	102	**Size**	102
Loss Of Guidance	N/A	**Loss Of Guidance**	N/A	**Loss Of Guidance**	N/A	**Loss Of Guidance**	N/A	**Loss Of Guidance**	N/A	**Loss Of Guidance**	N/A	**Loss Of Guidance**	N/A	**Loss Of Guidance**	N/A
Obstacle Avoidance	1	**Obstacle Avoidance**	1	**Obstacle Avoidance**	1	**Obstacle Avoidance**	1	**Obstacle Avoidance**	1	**Obstacle Avoidance**	1	**Obstacle Avoidance**	1	**Obstacle Avoidance**	1
Output	N/A	**Output**	N/A	**Output**	N/A	**Output**	#7 Pin Drop	**Output**		**Output**		**Output**	#6 pin up	**Output**	N/a
END OF STEP		**END OF STEP**		**END OF STEP**		**END OF STEP**		**END OF STEP**		**END OF STEP**		**END OF STEP**		**END OF STEP**	
END MODE	Distance	**END MODE**	Distance	**END MODE**	Distance	**END MODE**	time	**END MODE**	Distance	**END MODE**	Distance	**END MODE**	Distance	**END MODE**	Distance
END ACTION	Merge	**END ACTION**	Merge	**END ACTION**	Merge	**END ACTION**	Merge	**END ACTION**	Merge	**END ACTION**	Merge	**END ACTION**	Merge	**END ACTION**	Merge
NEXT ROUTE	6	**NEXT ROUTE**	6	**NEXT ROUTE**	6	**NEXT ROUTE**	6	**NEXT ROUTE**	6	**NEXT ROUTE**	6	**NEXT ROUTE**	6	**NEXT ROUTE**	6
NEXT STEP	**26**	**NEXT STEP**	**27**	**NEXT STEP**	**28**	**NEXT STEP**	**29**	**NEXT STEP**	**30**	**NEXT STEP**	**31**	**NEXT STEP**	**32**	**NEXT STEP**	**33**

Route 6:33		Route 6:34		Route 6:35		Route 6:36		Route 6:37		Route 6:38		Route 6:39		Route 6:40	
STEP INITIATION		STEP INITIATION		STEP INITIATION		STEP INITIATION		STEP INITIATION		STEP INITIATION		STEP INITIATION		STEP INITIATION	
Go Mode	Auto	Go Mode	Auto	Go Mode	Auto	Go Mode	Auto	Go Mode	Auto	Go Mode	Auto	Go Mode	Auto	Go Mode	Auto
Radio Input	dio Input 1	Radio Input	dio Input 1	Radio Input	dio Input 1	Radio Input	dio Input 1	Radio Input	dio Input 1	Radio Input	dio Input 1	Radio Input	dio Input 1	Radio Input	dio Input 1
Hard Wire Input	N/A	Hard Wire Input	N/A	Hard Wire Input	N/A	Hard Wire Input	N/A	Hard Wire Input	N/A	Hard Wire Input	N/A	Hard Wire Input	N/A	Hard Wire Input	N/A
BIT	N/A	BIT	N/A	BIT	N/A	BIT	N/A	BIT	N/A	BIT	N/A	BIT	N/A	BIT	N/A
STEP ACTION		STEP ACTION		STEP ACTION		STEP ACTION		STEP ACTION		STEP ACTION		STEP ACTION		STEP ACTION	
Function	Rotate	Function	Reverse	Function	Delay	Function	Forward	Function	Rotate	Function	Reverse	Function	Forward	Function	Rotate
Speed	33	Speed	33	Speed	33	Speed	33	Speed	33	Speed	33	Speed	33	Speed	33
Navigation	DR	Navigation	DR	Navigation	DR	Navigation	DR	Navigation	DR	Navigation	DR	Navigation	DR	Navigation	DR
Direction	Center	Direction	Center	Direction	Center	Direction	Center	Direction	Center	Direction	Center	Direction	Center	Direction	Center
Size	45	Size	99	Size	5	Size	99	Size	45	Size	104	Size	104	Size	-90
Loss Of Guidance	N/A	Loss Of Guidance	N/A	Loss Of Guidance	N/A	Loss Of Guidance	N/A	Loss Of Guidance	N/A	Loss Of Guidance	N/A	Loss Of Guidance	N/A	Loss Of Guidance	N/A
Obstacle Avoidance	1	Obstacle Avoidance	1	Obstacle Avoidance	1	Obstacle Avoidance	1	Obstacle Avoidance	1	Obstacle Avoidance	1	Obstacle Avoidance	1	Obstacle Avoidance	1
Output	N/a	Output	N/a	Output	#7 pin drop	Output	N/a	Output	N/a	Output	#7 pin raise	Output	N/A	Output	N/A
END OF STEP		END OF STEP		END OF STEP		END OF STEP		END OF STEP		END OF STEP		END OF STEP		END OF STEP	
END MODE	Distance	END MODE	Distance	END MODE	time	END MODE	Distance	END MODE	Distance	END MODE	Distance	END MODE	Distance	END MODE	Distance
END ACTION	Merge	END ACTION	Merge	END ACTION	Merge	END ACTION	Merge	END ACTION	Merge	END ACTION	Merge	END ACTION	Merge	END ACTION	Merge
NEXT ROUTE	6	NEXT ROUTE	6	NEXT ROUTE	6	NEXT ROUTE	6	NEXT ROUTE	6	NEXT ROUTE	6	NEXT ROUTE	6	NEXT ROUTE	6
NEXT STEP	34	NEXT STEP	35	NEXT STEP	36	NEXT STEP	37	NEXT STEP	38	NEXT STEP	39	NEXT STEP	40	NEXT STEP	41

Route 6:41		Route 6:42		Route 6:43		Route 6:44		Route 6:45		Route 6:46		Route 6:47		Route 6:48	
STEP INITIATION		STEP INITIATION		STEP INITIATION		STEP INITIATION		STEP INITIATION		STEP INITIATION		STEP INITIATION		STEP INITIATION	
Go Mode	Auto	Go Mode	Auto	Go Mode	Auto	Go Mode	Auto	Go Mode	Auto	Go Mode	Auto	Go Mode	Auto	Go Mode	Auto
Radio Input	dio Input 1	Radio Input	dio Input 1	Radio Input	dio Input 1	Radio Input	dio Input 1	Radio Input	dio Input 1	Radio Input	dio Input 1	Radio Input	dio Input 1	Radio Input	dio Input 1
Hard Wire Input	N/A	Hard Wire Input	N/A	Hard Wire Input	N/A	Hard Wire Input	N/A	Hard Wire Input	N/A	Hard Wire Input	Cart Prese	Hard Wire Input		Hard Wire Input	
BIT	N/A	BIT	N/A	BIT	N/A	BIT	N/A	BIT	N/A	BIT	N/A	BIT	N/A	BIT	N/A
STEP ACTION		STEP ACTION		STEP ACTION		STEP ACTION		STEP ACTION		STEP ACTION		STEP ACTION		STEP ACTION	
Function	Reverse	Function	Delay	Function	Forward	Function	Rotate	Function	Reverse	Function	Forward	Function	Rotate	Function	Forward
Speed	33	Speed	33	Speed	33	Speed	33	Speed	33	Speed	33	Speed	33	Speed	33
Navigation	DR	Navigation	DR	Navigation	DR	Navigation	DR	Navigation	DR	Navigation	DR	Navigation	DR	Navigation	DR
Direction	Center	Direction	Center	Direction	Center	Direction	Center	Direction	Center	Direction	Center	Direction	Center	Direction	Center
Size	102	Size	5	Size	102	Size	45	Size	99	Size	99	Size	45	Size	174
Loss Of Guidance	N/A	Loss Of Guidance	N/A	Loss Of Guidance	N/A	Loss Of Guidance	N/A	Loss Of Guidance	N/A	Loss Of Guidance	N/A	Loss Of Guidance	N/A	Loss Of Guidance	N/A
Obstacle Avoidance	1	Obstacle Avoidance	1	Obstacle Avoidance	1	Obstacle Avoidance	1	Obstacle Avoidance	1	Obstacle Avoidance	1	Obstacle Avoidance	1	Obstacle Avoidance	1
Output	N/A	Output	#7 Pin Drop	Output	N/a	Output	N/a	Output	#6 Pin Raise	Output	N/a	Output	N/a	Output	N/a
END OF STEP		END OF STEP		END OF STEP		END OF STEP		END OF STEP		END OF STEP		END OF STEP		END OF STEP	
END MODE	Distance	END MODE	Time	END MODE	Distance	END MODE	Distance	END MODE	Distance	END MODE	Distance	END MODE	Distance	END MODE	Distance
END ACTION	Merge	END ACTION	Merge	END ACTION	Merge	END ACTION	Merge	END ACTION	Merge	END ACTION	Merge	END ACTION	Merge	END ACTION	Merge
NEXT ROUTE	6	NEXT ROUTE	6	NEXT ROUTE	6	NEXT ROUTE	6	NEXT ROUTE	6	NEXT ROUTE	6	NEXT ROUTE	6	NEXT ROUTE	6
NEXT STEP	42	NEXT STEP	43	NEXT STEP	44	NEXT STEP	45	NEXT STEP	46	NEXT STEP	47	NEXT STEP	48	NEXT STEP	49

Route 6:49		Route 6:50		Route 6:51		Route 6:52		Route 6:53		Route 6:54		Route 6:55		Route 6:56	
STEP INITIATION		STEP INITIATION		STEP INITIATION		STEP INITIATION		STEP INITIATION		STEP INITIATION		STEP INITIATION		STEP INITIATION	
Go Mode	Auto	Go Mode	Auto	Go Mode	Auto	Go Mode	Auto	Go Mode	Auto	Go Mode	Auto	Go Mode	Auto	Go Mode	Auto
Radio Input	dio Input 1	Radio Input	dio Input 1	Radio Input	dio Input 1	Radio Input	dio Input 1	Radio Input	dio Input 1	Radio Input	dio Input 1	Radio Input	dio Input 1	Radio Input	dio Input 1
Hard Wire Input		Hard Wire Input		Hard Wire Input		Hard Wire Input		Hard Wire Input		Hard Wire Input		Hard Wire Input		Hard Wire Input	
BIT	N/A	BIT	N/A	BIT	N/A	BIT	N/A	BIT	N/A	BIT	N/A	BIT	N/A	BIT	N/A
STEP ACTION		STEP ACTION		STEP ACTION		STEP ACTION		STEP ACTION		STEP ACTION		STEP ACTION		STEP ACTION	
Function	Rotate	Function	Forward	Function	Rotate	Function	Forward	Function	Rotate	Function	Forward	Function	Rotate	Function	Forward
Speed	33	Speed	33	Speed	33	Speed	33	Speed	33	Speed	33	Speed	33	Speed	33
Navigation	DR	Navigation	DR	Navigation	DR	Navigation	DR	Navigation	DR	Navigation	DR	Navigation	DR	Navigation	DR
Direction	Center	Direction	Center	Direction	Center	Direction	Center	Direction	Center	Direction	Center	Direction	Center	Direction	Center
Size	90	Size	1240	Size	-90	Size	2284	Size	90	Size	331	Size	90	Size	144
Loss Of Guidance	N/A	Loss Of Guidance	N/A	Loss Of Guidance	N/A	Loss Of Guidance	N/A	Loss Of Guidance	N/A	Loss Of Guidance	N/A	Loss Of Guidance	N/A	Loss Of Guidance	N/A
Obstacle Avoidance	1	Obstacle Avoidance	1	Obstacle Avoidance	1	Obstacle Avoidance	1	Obstacle Avoidance	1	Obstacle Avoidance	1	Obstacle Avoidance	1	Obstacle Avoidance	1
Output	N/a	Output	N/a	Output	N/a	Output	N/a	Output	N/a	Output	N/a	Output	N/a	Output	N/a
END OF STEP		END OF STEP		END OF STEP		END OF STEP		END OF STEP		END OF STEP		END OF STEP		END OF STEP	
END MODE	Distance	END MODE	Distance	END MODE	Distance	END MODE	Distance	END MODE	Distance	END MODE	Distance	END MODE	Distance	END MODE	Distance
END ACTION	Merge	END ACTION	Merge	END ACTION	Merge	END ACTION	Merge	END ACTION	Merge	END ACTION	Merge	END ACTION	Merge	END ACTION	Merge
NEXT ROUTE	6	NEXT ROUTE	6	NEXT ROUTE	6	NEXT ROUTE	6	NEXT ROUTE	6	NEXT ROUTE	6	NEXT ROUTE	6	NEXT ROUTE	6
NEXT STEP	50	NEXT STEP	51	NEXT STEP	52	NEXT STEP	53	NEXT STEP	54	NEXT STEP	55	NEXT STEP	56	NEXT STEP	57

Route 6:57		Route 6:58		Route 6:59		Route 6:60		Route 6:61		Route 6:62		Route 6:63		Route 6:64	
STEP INITIATION		STEP INITIATION		STEP INITIATION		STEP INITIATION		STEP INITIATION		STEP INITIATION		STEP INITIATION		STEP INITIATION	
Go Mode	Auto	Go Mode	Auto	Go Mode	Auto	Go Mode	Auto	Go Mode	Auto	Go Mode	Auto	Go Mode	Auto	Go Mode	Auto
Radio Input	dio Input 1	Radio Input	dio Input 1	Radio Input	dio Input 1	Radio Input	dio Input 1	Radio Input	dio Input 1	Radio Input	dio Input 1	Radio Input	dio Input 1	Radio Input	dio Input 1
Hard Wire Input		Hard Wire Input		Hard Wire Input		Hard Wire Input		Hard Wire Input		Hard Wire Input		Hard Wire Input		Hard Wire Input	
BIT	N/A	BIT	N/A	BIT	N/A	BIT	N/A	BIT	N/A	BIT	N/A	BIT	N/A	BIT	N/A
STEP ACTION		STEP ACTION		STEP ACTION		STEP ACTION		STEP ACTION		STEP ACTION		STEP ACTION		STEP ACTION	
Function	Rotate	Function	Reverse	Function	Dellay	Function	Forward	Function	Rotate	Function	Forward	Function	Rotate	Function	Forward
Speed	33	Speed	33	Speed	33	Speed	33	Speed	33	Speed	33	Speed	33	Speed	33
Navigation	DR	Navigation	DR	Navigation	DR	Navigation	DR	Navigation	DR	Navigation	DR	Navigation	DR	Navigation	DR
Direction	Center	Direction	Center	Direction	Center	Direction	Center	Direction	Center	Direction	Center	Direction	Center	Direction	Center
Size	-90	Size	62	Size	5	Size	62	Size	-90	Size	144	Size	-90	Size	331
Loss Of Guidance	N/A	Loss Of Guidance	N/A	Loss Of Guidance	N/A	Loss Of Guidance	N/A	Loss Of Guidance	N/A	Loss Of Guidance	N/A	Loss Of Guidance	N/A	Loss Of Guidance	N/A
Obstacle Avoidance	1	Obstacle Avoidance	1	Obstacle Avoidance	1	Obstacle Avoidance	1	Obstacle Avoidance	1	Obstacle Avoidance	1	Obstacle Avoidance	1	Obstacle Avoidance	1
Output	N/a	Output	N/a	Output	#7 Pin Drop	Output		Output		Output		Output		Output	
END OF STEP		END OF STEP		END OF STEP		END OF STEP		END OF STEP		END OF STEP		END OF STEP		END OF STEP	
END MODE	Distance	END MODE	Distance	END MODE	time	END MODE	Distance	END MODE	Distance	END MODE	Distance	END MODE	Distance	END MODE	Distance
END ACTION	Merge	END ACTION	Merge	END ACTION	Merge	END ACTION	Merge	END ACTION	Merge	END ACTION	Merge	END ACTION	Merge	END ACTION	Merge
NEXT ROUTE	6	NEXT ROUTE	6	NEXT ROUTE	6	NEXT ROUTE	6	NEXT ROUTE	6	NEXT ROUTE	6	NEXT ROUTE	6	NEXT ROUTE	6
NEXT STEP	58	NEXT STEP	59	NEXT STEP	60	NEXT STEP	61	NEXT STEP	62	NEXT STEP	63	NEXT STEP	64	NEXT STEP	65

Route 6:65		Route 6:66		Route 6:67		Route 6:68		Route 6:69		Route 6:70		Route 6:71		Route 6:72	
STEP INITIATION		**STEP INITIATION**		**STEP INITIATION**		**STEP INITIATION**		**STEP INITIATION**		**STEP INITIATION**		**STEP INITIATION**		**STEP INITIATION**	
Go Mode	Auto	**Go Mode**	Auto	**Go Mode**	Auto	**Go Mode**	Auto	**Go Mode**	Auto	**Go Mode**	Auto	**Go Mode**	Auto	**Go Mode**	Auto
Radio Input	dio Input 1-	**Radio Input**	dio Input 1-	**Radio Input**	dio Input 1-	**Radio Input**	dio Input 1-	**Radio Input**	dio Input 1-	**Radio Input**	dio Input 1-	**Radio Input**	dio Input 1-	**Radio Input**	dio Input 1-
Hard Wire Input		**Hard Wire Input**		**Hard Wire Input**	N/a	**Hard Wire Input**	N/a	**Hard Wire Input**	N/a	**Hard Wire Input**	N/a	**Hard Wire Input**	N/a	**Hard Wire Input**	N/a
BIT	N/A	**BIT**	N/A	**BIT**	N/A	**BIT**	N/A	**BIT**	N/A	**BIT**	N/A	**BIT**	N/A	**BIT**	N/A
STEP ACTION		**STEP ACTION**		**STEP ACTION**		**STEP ACTION**		**STEP ACTION**		**STEP ACTION**		**STEP ACTION**		**STEP ACTION**	
Function	Rotate	**Function**	Forward	**Function**	Rotate	**Function**	Forward	**Function**	Rotate	**Function**	Forward	**Function**	Rotate	**Function**	Forward
Speed	33	**Speed**	33	**Speed**	33	**Speed**	33	**Speed**	33	**Speed**	33	**Speed**	33	**Speed**	33
Navigation	DR	**Navigation**	DR	**Navigation**	DR	**Navigation**	DR	**Navigation**	DR	**Navigation**	DR	**Navigation**	DR	**Navigation**	DR
Direction	Center	**Direction**	Center	**Direction**	Center	**Direction**	Center	**Direction**	Center	**Direction**	Center	**Direction**	Center	**Direction**	Center
Size	-90	**Size**	2284	**Size**	90	**Size**	962	**Size**	-90	**Size**	525	**Size**	90	**Size**	417
Loss Of Guidance	N/A	**Loss Of Guidance**	N/A	**Loss Of Guidance**	N/A	**Loss Of Guidance**	N/A	**Loss Of Guidance**	N/A	**Loss Of Guidance**	N/A	**Loss Of Guidance**	N/A	**Loss Of Guidance**	N/A
Obstacle Avoidance	1	**Obstacle Avoidance**	1	**Obstacle Avoidance**	1	**Obstacle Avoidance**	1	**Obstacle Avoidance**	1	**Obstacle Avoidance**	1	**Obstacle Avoidance**	1	**Obstacle Avoidance**	1
Output		**Output**		**Output**	N/a	**Output**	N/a	**Output**	N/a	**Output**	N/a	**Output**	N/a	**Output**	N/a
END OF STEP		**END OF STEP**		**END OF STEP**		**END OF STEP**		**END OF STEP**		**END OF STEP**		**END OF STEP**		**END OF STEP**	
END MODE	Distance	**END MODE**	Distance	**END MODE**	Distance	**END MODE**	Distance	**END MODE**	Distance	**END MODE**	Distance	**END MODE**	Distance	**END MODE**	Distance
END ACTION	Merge	**END ACTION**	Merge	**END ACTION**	Merge	**END ACTION**	Merge	**END ACTION**	Merge	**END ACTION**	Merge	**END ACTION**	Merge	**END ACTION**	Merge
NEXT ROUTE	6	**NEXT ROUTE**	6	**NEXT ROUTE**	6	**NEXT ROUTE**	6	**NEXT ROUTE**	6	**NEXT ROUTE**	6	**NEXT ROUTE**	6	**NEXT ROUTE**	6
NEXT STEP	**66**	**NEXT STEP**	**67**	**NEXT STEP**	**68**	**NEXT STEP**	**69**	**NEXT STEP**	**70**	**NEXT STEP**	**71**	**NEXT STEP**	**72**	**NEXT STEP**	**73**

Route 6:73		Route 6:74		Route 0: 1	
STEP INITIATION		**STEP INITIATION**		**STEP INITIATION**	
Go Mode	Auto	**Go Mode**	Auto	**Go Mode**	nput Trigge
Radio Input	dio Input 1-	**Radio Input**	dio Input 1-	**Radio Input**	dio Input 1-
Hard Wire Input	N/a	**Hard Wire Input**	N/a	**Hard Wire Input**	N/a
BIT	N/A	**BIT**	N/A	**BIT**	BIT #1-#24
STEP ACTION		**STEP ACTION**		**STEP ACTION**	
Function	Rotate	**Function**	Reverse	**Function**	Auto
Speed	33	**Speed**	33	**Speed**	33
Navigation	DR	**Navigation**	DR	**Navigation**	DR
Direction	Center	**Direction**	Center	**Direction**	Center
Size	-90	**Size**	66	**Size**	66
Loss Of Guidance	N/A	**Loss Of Guidance**	N/A	**Loss Of Guidance**	N/A
Obstacle Avoidance	1	**Obstacle Avoidance**	1	**Obstacle Avoidance**	1
Output	N/a	**Output**	N/a	**Output**	N/a
END OF STEP		**END OF STEP**		**END OF STEP**	
END MODE	Distance	**END MODE**	Distance	**END MODE**	Distance
END ACTION	Merge	**END ACTION**	Merge	**END ACTION**	Merge
NEXT ROUTE	6	**NEXT ROUTE**	0	**NEXT ROUTE**	0
NEXT STEP	**74**	**NEXT STEP**	1	**NEXT STEP**	1

Tier 3 Route 7

Route 7:1		Route 7:2		Route 7:3		Route 7:4		Route 7:5		Route 7:6		Route 7:7		Route 7:8	
STEP INITIATION		**STEP INITIATION**		**STEP INITIATION**		**STEP INITIATION**		**STEP INITIATION**		**STEP INITIATION**		**STEP INITIATION**		**STEP INITIATION**	
Go Mode	nput Triggers	**Go Mode**	Auto	**Go Mode**	Auto	**Go Mode**	Auto	**Go Mode**	Auto	**Go Mode**	Auto	**Go Mode**	Auto	**Go Mode**	Auto
Radio Input	adio Input 1-2	**Radio Input**	dio Input 1-	**Radio Input**	dio Input 1-	**Radio Input**	dio Input 1-	**Radio Input**	dio Input 1-	**Radio Input**	dio Input 1-	**Radio Input**	dio Input 1-	**Radio Input**	dio Input 1-
Hard Wire Input	N/A	**Hard Wire Input**	N/A	**Hard Wire Input**	N/A	**Hard Wire Input**	N/A	**Hard Wire Input**	N/A	**Hard Wire Input**	N/A	**Hard Wire Input**	N/A	**Hard Wire Input**	N/A
BIT	Bit #1 off	**BIT**	N/A	**BIT**	N/A	**BIT**	N/A	**BIT**	N/A	**BIT**	N/A	**BIT**	N/A	**BIT**	N/A
Bit#11 On, #14 On	it #5 and 6 Off														
Home Position RFID	it #7 and 9 of														
	t #8 and 10 o														
STEP ACTION		**STEP ACTION**		**STEP ACTION**		**STEP ACTION**		**STEP ACTION**		**STEP ACTION**		**STEP ACTION**		**STEP ACTION**	
Function	Dispatch	**Function**	Forward	**Function**	Rotate	**Function**	Forward	**Function**	Rotate	**Function**	Forward	**Function**	Rotate	**Function**	Forward
Speed	N/A	**Speed**	33	**Speed**	33	**Speed**	33	**Speed**	33	**Speed**	33	**Speed**	33	**Speed**	33
Navigation	N/A	**Navigation**	DR	**Navigation**	DR	**Navigation**	DR	**Navigation**	DR	**Navigation**	DR	**Navigation**	DR	**Navigation**	DR
Direction	N/A	**Direction**	Center	**Direction**	Center	**Direction**	Center	**Direction**	Center	**Direction**	Center	**Direction**	Center	**Direction**	Center
Size	N/A	**Size**	66	**Size**	-90	**Size**	417	**Size**	-90	**Size**	525	**Size**	90	**Size**	962
Loss Of Guidance	N/A	**Loss Of Guidance**	N/A	**Loss Of Guidance**	N/A	**Loss Of Guidance**	N/A	**Loss Of Guidance**	N/A	**Loss Of Guidance**	N/A	**Loss Of Guidance**	N/A	**Loss Of Guidance**	N/A
Obstacle Avoidance	N/A	**Obstacle Avoidance**	1	**Obstacle Avoidance**	1	**Obstacle Avoidance**	1	**Obstacle Avoidance**	1	**Obstacle Avoidance**	1	**Obstacle Avoidance**	1	**Obstacle Avoidance**	1
Output	N/A	**Output**	N/A	**Output**	N/A	**Output**	N/A	**Output**	N/A	**Output**	N/A	**Output**	N/A	**Output**	N/A
END OF STEP		**END OF STEP**		**END OF STEP**		**END OF STEP**		**END OF STEP**		**END OF STEP**		**END OF STEP**		**END OF STEP**	
END MODE	N/A	**END MODE**	Distance	**END MODE**	Distance	**END MODE**	Distance	**END MODE**	Distance	**END MODE**	Distance	**END MODE**	Distance	**END MODE**	Distance
END ACTION	e Bit #11, #1	**END ACTION**	Merge	**END ACTION**	Merge	**END ACTION**	Merge	**END ACTION**	Merge	**END ACTION**	Merge	**END ACTION**	Merge	**END ACTION**	Merge
NEXT ROUTE	7	**NEXT ROUTE**	7	**NEXT ROUTE**	7	**NEXT ROUTE**	7	**NEXT ROUTE**	7	**NEXT ROUTE**	7	**NEXT ROUTE**	7	**NEXT ROUTE**	7
NEXT STEP	**2**	**NEXT STEP**	**3**	**NEXT STEP**	**4**	**NEXT STEP**	**5**	**NEXT STEP**	**6**	**NEXT STEP**	**7**	**NEXT STEP**	**8**	**NEXT STEP**	**9**

Route 7:9		Route 7:10		Route 7:11		Route 7:12		Route 7:13		Route 7:14		Route 7:15		Route 7:16	
STEP INITIATION		**STEP INITIATION**		**STEP INITIATION**		**STEP INITIATION**		**STEP INITIATION**		**STEP INITIATION**		**STEP INITIATION**		**STEP INITIATION**	
Go Mode	Auto	**Go Mode**	Auto	**Go Mode**	Auto	**Go Mode**	Auto	**Go Mode**	Auto	**Go Mode**	Auto	**Go Mode**	Auto	**Go Mode**	Auto
Radio Input	dio Input 1-	**Radio Input**	dio Input 1-	**Radio Input**	dio Input 1-	**Radio Input**	dio Input 1-	**Radio Input**	dio Input 1-	**Radio Input**	dio Input 1-	**Radio Input**	dio Input 1-	**Radio Input**	dio Input 1-
Hard Wire Input	N/A	**Hard Wire Input**	N/A	**Hard Wire Input**	N/A	**Hard Wire Input**	N/A	**Hard Wire Input**	N/A	**Hard Wire Input**	N/A	**Hard Wire Input**	N/A	**Hard Wire Input**	N/A
BIT	N/A	**BIT**	N/A	**BIT**	N/A	**BIT**	N/A	**BIT**	N/A	**BIT**	N/A	**BIT**	N/A	**BIT**	N/A
STEP ACTION		**STEP ACTION**		**STEP ACTION**		**STEP ACTION**		**STEP ACTION**		**STEP ACTION**		**STEP ACTION**		**STEP ACTION**	
Function	Rotate	**Function**	Forward	**Function**	Rotate	**Function**	Forward	**Function**	Rotate	**Function**	Forward	**Function**	Rotate	**Function**	Reverse
Speed	33	**Speed**	33	**Speed**	33	**Speed**	33	**Speed**	33	**Speed**	33	**Speed**	33	**Speed**	33
Navigation	DR	**Navigation**	DR	**Navigation**	DR	**Navigation**	DR	**Navigation**	DR	**Navigation**	DR	**Navigation**	DR	**Navigation**	DR
Direction	Center	**Direction**	Center	**Direction**	Center	**Direction**	Center	**Direction**	Center	**Direction**	Center	**Direction**	Center	**Direction**	Center
Size	-90	**Size**	2284	**Size**	90	**Size**	331	**Size**	90	**Size**	208	**Size**	-90	**Size**	62
Loss Of Guidance	N/A	**Loss Of Guidance**	N/A	**Loss Of Guidance**	N/A	**Loss Of Guidance**	N/A	**Loss Of Guidance**	N/A	**Loss Of Guidance**	N/A	**Loss Of Guidance**	N/A	**Loss Of Guidance**	N/A
Obstacle Avoidance	1	**Obstacle Avoidance**	1	**Obstacle Avoidance**	1	**Obstacle Avoidance**	1	**Obstacle Avoidance**	1	**Obstacle Avoidance**	1	**Obstacle Avoidance**	1	**Obstacle Avoidance**	1
Output	N/A	**Output**	N/A	**Output**	N/A	**Output**	N/A	**Output**	N/A	**Output**	N/A	**Output**	N/A	**Output**	#6 Pin Up
END OF STEP		**END OF STEP**		**END OF STEP**		**END OF STEP**		**END OF STEP**		**END OF STEP**		**END OF STEP**		**END OF STEP**	
END MODE	Distance	**END MODE**	Distance	**END MODE**	Distance	**END MODE**	Distance	**END MODE**	Distance	**END MODE**	Distance	**END MODE**	Distance	**END MODE**	Distance
END ACTION	Merge	**END ACTION**	Merge	**END ACTION**	Merge	**END ACTION**	Merge	**END ACTION**	Merge	**END ACTION**	Merge	**END ACTION**	Merge	**END ACTION**	Merge
NEXT ROUTE	7	**NEXT ROUTE**	7	**NEXT ROUTE**	7	**NEXT ROUTE**	7	**NEXT ROUTE**	7	**NEXT ROUTE**	7	**NEXT ROUTE**	7	**NEXT ROUTE**	7
NEXT STEP	**10**	**NEXT STEP**	**11**	**NEXT STEP**	**12**	**NEXT STEP**	**13**	**NEXT STEP**	**14**	**NEXT STEP**	**15**	**NEXT STEP**	**16**	**NEXT STEP**	**17**

Route 7:17		Route 7:18		Route 7:19		Route 7:20		Route 7:21		Route 7:22		Route 7:23		Route 7:24	
STEP INITIATION		**STEP INITIATION**		**STEP INITIATION**		**STEP INITIATION**		**STEP INITIATION**		**STEP INITIATION**		**STEP INITIATION**		**STEP INITIATION**	
Go Mode	Auto	**Go Mode**	Auto	**Go Mode**	Auto	**Go Mode**	Auto	**Go Mode**	Auto	**Go Mode**	Auto	**Go Mode**	Auto	**Go Mode**	Auto
Radio Input	dio Input 1-	**Radio Input**	dio Input 1-	**Radio Input**	dio Input 1-	**Radio Input**	dio Input 1-	**Radio Input**	dio Input 1-	**Radio Input**	dio Input 1-	**Radio Input**	dio Input 1-	**Radio Input**	dio Input 1-
Hard Wire Input	N/A	**Hard Wire Input**	N/A	**Hard Wire Input**	N/A	**Hard Wire Input**	N/A	**Hard Wire Input**	N/A	**Hard Wire Input**	N/A	**Hard Wire Input**	N/A	**Hard Wire Input**	N/A
BIT	N/A	**BIT**	N/A	**BIT**	N/A	**BIT**	N/A	**BIT**	N/A	**BIT**	N/A	**BIT**	N/A	**BIT**	N/A
STEP ACTION		**STEP ACTION**		**STEP ACTION**		**STEP ACTION**		**STEP ACTION**		**EP ACTION**		**STEP ACTION**		**STEP ACTION**	
Function	Forward	**Function**	Rotate	**Function**	Forward	**Function**	Rotate	**Function**	Forward	**Function**	Rotate	**Function**	Forward	**Function**	Rotate
Speed	33	**Speed**	33	**Speed**	33	**Speed**	33	**Speed**	33	**Speed**	33	**Speed**	33	**Speed**	33
Navigation	DR	**Navigation**	DR	**Navigation**	DR	**Navigation**	DR	**Navigation**	DR	**Navigation**	DR	**Navigation**	DR	**Navigation**	DR
Direction	Center	**Direction**	Center	**Direction**	Center	**Direction**	Center	**Direction**	Center	**Direction**	Center	**Direction**	Center	**Direction**	Center
Size	62	**Size**	-90	**Size**	208	**Size**	-90	**Size**	331	**Size**	-90	**Size**	2284	**Size**	90
Loss Of Guidance	N/A	**Loss Of Guidance**	N/A	**Loss Of Guidance**	N/A	**Loss Of Guidance**	N/A	**Loss Of Guidance**	N/A	**Loss Of Guidance**	N/A	**Loss Of Guidance**	N/A	**Loss Of Guidance**	N/A
Obstacle Avoidance	1	**Obstacle Avoidance**	1	**Obstacle Avoidance**	1	**Obstacle Avoidance**	1	**Obstacle Avoidance**	1	**Obstacle Avoidance**	1	**Obstacle Avoidance**	1	**Obstacle Avoidance**	1
Output	N/A	**Output**	N/A	**Output**	N/A	**Output**	N/A	**Output**	N/A	**Output**	N/A	**Output**	N/A	**Output**	N/A
END OF STEP		**END OF STEP**		**END OF STEP**		**END OF STEP**		**END OF STEP**		**ID OF STEP**		**END OF STEP**		**END OF STEP**	
END MODE	Distance	**END MODE**	Distance	**END MODE**	Distance	**END MODE**	Distance	**END MODE**	Distance	**END MODE**	Distance	**END MODE**	Distance	**END MODE**	Distance
END ACTION	Merge	**END ACTION**	Merge	**END ACTION**	Merge	**END ACTION**	Merge	**END ACTION**	Merge	**END ACTION**	Merge	**END ACTION**	Merge	**END ACTION**	Merge
NEXT ROUTE	7	**NEXT ROUTE**	7	**NEXT ROUTE**	7	**NEXT ROUTE**	7	**NEXT ROUTE**	7	**NEXT ROUTE**	7	**NEXT ROUTE**	7	**NEXT ROUTE**	7
NEXT STEP	**18**	**NEXT STEP**	**19**	**NEXT STEP**	**20**	**NEXT STEP**	**21**	**NEXT STEP**	**22**	**NEXT STEP**	**23**	**NEXT STEP**	**24**	**NEXT STEP**	**25**

Route 7:25		Route 7:26		Route 7:27		Route 7:28		Route 7:29		Route 7:30		Route 7:31		Route 7:32	
STEP INITIATION		**STEP INITIATION**		**STEP INITIATION**		**STEP INITIATION**		**STEP INITIATION**		**STEP INITIATION**		**STEP INITIATION**		**STEP INITIATION**	
Go Mode	Auto	**Go Mode**	Auto	**Go Mode**	Auto	**Go Mode**	Auto	**Go Mode**	Auto	**Go Mode**	Auto	**Go Mode**	Auto	**Go Mode**	Auto
Radio Input	dio Input 1-	**Radio Input**	dio Input 1-	**Radio Input**	dio Input 1-	**Radio Input**	dio Input 1-	**Radio Input**	dio Input 1-	**Radio Input**	dio Input 1-	**Radio Input**	dio Input 1-	**Radio Input**	dio Input 1-
Hard Wire Input	N/A	**Hard Wire Input**	N/A	**Hard Wire Input**	N/A	**Hard Wire Input**	N/A	**Hard Wire Input**	N/A	**Hard Wire Input**	N/A	**Hard Wire Input**	N/A	**Hard Wire Input**	Cart prese
BIT	N/A	**BIT**	N/A	**BIT**	N/A	**BIT**	N/A	**BIT**	N/A	**BIT**	N/A	**BIT**	N/A	**BIT**	N/A
STEP ACTION		**STEP ACTION**		**STEP ACTION**		**STEP ACTION**		**STEP ACTION**		**STEP ACTION**		**STEP ACTION**		**STEP ACTION**	
Function	Forward	**Function**	Rotate	**Function**	Reverse	**Function**	Delay	**Function**	Forward	**Function**	Rotate	**Function**	Reverse	**Function**	Forward
Speed	33	**Speed**	33	**Speed**	33	**Speed**	33	**Speed**	33	**Speed**	33	**Speed**	33	**Speed**	33
Navigation	DR	**Navigation**	DR	**Navigation**	DR	**Navigation**	DR	**Navigation**	DR	**Navigation**	DR	**Navigation**	DR	**Navigation**	DR
Direction	Center	**Direction**	Center	**Direction**	Center	**Direction**	Center	**Direction**	Center	**Direction**	Center	**Direction**	Center	**Direction**	Center
Size	1240	**Size**	90	**Size**	279	**Size**	5	**Size**	104	**Size**	-90	**Size**	102	**Size**	102
Loss Of Guidance	N/A	**Loss Of Guidance**	N/A	**Loss Of Guidance**	N/A	**Loss Of Guidance**	N/A	**Loss Of Guidance**	N/A	**Loss Of Guidance**	N/A	**Loss Of Guidance**	N/A	**Loss Of Guidance**	N/A
Obstacle Avoidance	1	**Obstacle Avoidance**	1	**Obstacle Avoidance**	1	**Obstacle Avoidance**	1	**Obstacle Avoidance**	1	**Obstacle Avoidance**	1	**Obstacle Avoidance**	1	**Obstacle Avoidance**	1
Output	N/A	**Output**	N/A	**Output**	N/A	**Output**	#7 Pin Drop	**Output**		**Output**		**Output**	#6 pin up	**Output**	N/a
END OF STEP		**END OF STEP**		**END OF STEP**		**END OF STEP**		**END OF STEP**		**END OF STEP**		**END OF STEP**		**END OF STEP**	
END MODE	Distance	**END MODE**	Distance	**END MODE**	Distance	**END MODE**	time	**END MODE**	Distance	**END MODE**	Distance	**END MODE**	Distance	**END MODE**	Distance
END ACTION	Merge	**END ACTION**	Merge	**END ACTION**	Merge	**END ACTION**	Merge	**END ACTION**	Merge	**END ACTION**	Merge	**END ACTION**	Merge	**END ACTION**	Merge
NEXT ROUTE	7	**NEXT ROUTE**	7	**NEXT ROUTE**	7	**NEXT ROUTE**	7	**NEXT ROUTE**	7	**NEXT ROUTE**	7	**NEXT ROUTE**	7	**NEXT ROUTE**	7
NEXT STEP	**26**	**NEXT STEP**	**27**	**NEXT STEP**	**28**	**NEXT STEP**	**29**	**NEXT STEP**	**30**	**NEXT STEP**	**31**	**NEXT STEP**	**32**	**NEXT STEP**	**33**

Route 7:33		Route 7:34		Route 7:35		Route 7:36		Route 7:37		Route 7:38		Route 7:39		Route 7:40	
STEP INITIATION		STEP INITIATION		STEP INITIATION		STEP INITIATION		STEP INITIATION		STEP INITIATION		STEP INITIATION		STEP INITIATION	
Go Mode	Auto	Go Mode	Auto	Go Mode	Auto	Go Mode	Auto	Go Mode	Auto	Go Mode	Auto	Go Mode	Auto	Go Mode	Auto
Radio Input	dio Input 1	Radio Input	dio Input 1	Radio Input	dio Input 1	Radio Input	dio Input 1	Radio Input	dio Input 1	Radio Input	dio Input 1	Radio Input	dio Input 1	Radio Input	dio Input 1
Hard Wire Input	N/A	Hard Wire Input	N/A	Hard Wire Input	N/A	Hard Wire Input	N/A	Hard Wire Input	N/A	Hard Wire Input	N/A	Hard Wire Input	N/A	Hard Wire Input	N/A
BIT	N/A	BIT	N/A	BIT	N/A	BIT	N/A	BIT	N/A	BIT	N/A	BIT	N/A	BIT	N/A
STEP ACTION		STEP ACTION		STEP ACTION		STEP ACTION		STEP ACTION		STEP ACTION		STEP ACTION		STEP ACTION	
Function	Rotate	Function	Reverse	Function	Delay	Function	Forward	Function	Rotate	Function	Reverse	Function	Forward	Function	Rotate
Speed	33	Speed	33	Speed	33	Speed	33	Speed	33	Speed	33	Speed	33	Speed	33
Navigation	DR	Navigation	DR	Navigation	DR	Navigation	DR	Navigation	DR	Navigation	DR	Navigation	DR	Navigation	DR
Direction	Center	Direction	Center	Direction	Center	Direction	Center	Direction	Center	Direction	Center	Direction	Center	Direction	Center
Size	45	Size	99	Size	5	Size	99	Size	45	Size	104	Size	104	Size	-90
Loss Of Guidance	N/A	Loss Of Guidance	N/A	Loss Of Guidance	N/A	Loss Of Guidance	N/A	Loss Of Guidance	N/A	Loss Of Guidance	N/A	Loss Of Guidance	N/A	Loss Of Guidance	N/A
Obstacle Avoidance	1	Obstacle Avoidance	1	Obstacle Avoidance	1	Obstacle Avoidance	1	Obstacle Avoidance	1	Obstacle Avoidance	1	Obstacle Avoidance	1	Obstacle Avoidance	1
Output	N/a	Output	N/a	Output	#7 pin drop	Output	N/a	Output	N/a	Output	#7 pin raise	Output	N/A	Output	N/A
END OF STEP		END OF STEP		END OF STEP		END OF STEP		END OF STEP		END OF STEP		END OF STEP		END OF STEP	
END MODE	Distance	END MODE	Distance	END MODE	time	END MODE	Distance	END MODE	Distance	END MODE	Distance	END MODE	Distance	END MODE	Distance
END ACTION	Merge	END ACTION	Merge	END ACTION	Merge	END ACTION	Merge	END ACTION	Merge	END ACTION	Merge	END ACTION	Merge	END ACTION	Merge
NEXT ROUTE	7	NEXT ROUTE	7	NEXT ROUTE	7	NEXT ROUTE	7	NEXT ROUTE	7	NEXT ROUTE	7	NEXT ROUTE	7	NEXT ROUTE	7
NEXT STEP	34	NEXT STEP	35	NEXT STEP	36	NEXT STEP	37	NEXT STEP	38	NEXT STEP	39	NEXT STEP	40	NEXT STEP	41

Route 7:41		Route 7:42		Route 7:43		Route 7:44		Route 7:45		Route 7:46		Route 7:47		Route 7:48	
STEP INITIATION		STEP INITIATION		STEP INITIATION		STEP INITIATION		STEP INITIATION		STEP INITIATION		STEP INITIATION		STEP INITIATION	
Go Mode	Auto	Go Mode	Auto	Go Mode	Auto	Go Mode	Auto	Go Mode	Auto	Go Mode	Auto	Go Mode	Auto	Go Mode	Auto
Radio Input	dio Input 1	Radio Input	dio Input 1	Radio Input	dio Input 1	Radio Input	dio Input 1	Radio Input	dio Input 1	Radio Input	dio Input 1	Radio Input	dio Input 1	Radio Input	dio Input 1
Hard Wire Input	N/A	Hard Wire Input	N/A	Hard Wire Input	N/A	Hard Wire Input	N/A	Hard Wire Input	N/A	Hard Wire Input	Cart Prese	Hard Wire Input		Hard Wire Input	
BIT	N/A	BIT	N/A	BIT	N/A	BIT	N/A	BIT	N/A	BIT	N/A	BIT	N/A	BIT	N/A
STEP ACTION		STEP ACTION		STEP ACTION		STEP ACTION		STEP ACTION		STEP ACTION		STEP ACTION		STEP ACTION	
Function	Reverse	Function	Delay	Function	Forward	Function	Rotate	Function	Reverse	Function	Forward	Function	Rotate	Function	Forward
Speed	33	Speed	33	Speed	33	Speed	33	Speed	33	Speed	33	Speed	33	Speed	33
Navigation	DR	Navigation	DR	Navigation	DR	Navigation	DR	Navigation	DR	Navigation	DR	Navigation	DR	Navigation	DR
Direction	Center	Direction	Center	Direction	Center	Direction	Center	Direction	Center	Direction	Center	Direction	Center	Direction	Center
Size	102	Size	5	Size	102	Size	45	Size	99	Size	99	Size	45	Size	174
Loss Of Guidance	N/A	Loss Of Guidance	N/A	Loss Of Guidance	N/A	Loss Of Guidance	N/A	Loss Of Guidance	N/A	Loss Of Guidance	N/A	Loss Of Guidance	N/A	Loss Of Guidance	N/A
Obstacle Avoidance	1	Obstacle Avoidance	1	Obstacle Avoidance	1	Obstacle Avoidance	1	Obstacle Avoidance	1	Obstacle Avoidance	1	Obstacle Avoidance	1	Obstacle Avoidance	1
Output	N/A	Output	#7 Pin Drop	Output	N/a	Output	N/a	Output	#6 Pin Raise	Output	N/a	Output	N/a	Output	N/a
END OF STEP		END OF STEP		END OF STEP		END OF STEP		END OF STEP		END OF STEP		END OF STEP		END OF STEP	
END MODE	Distance	END MODE	Time	END MODE	Distance	END MODE	Distance	END MODE	Distance	END MODE	Distance	END MODE	Distance	END MODE	Distance
END ACTION	Merge	END ACTION	Merge	END ACTION	Merge	END ACTION	Merge	END ACTION	Merge	END ACTION	Merge	END ACTION	Merge	END ACTION	Merge
NEXT ROUTE	7	NEXT ROUTE	7	NEXT ROUTE	7	NEXT ROUTE	7	NEXT ROUTE	7	NEXT ROUTE	7	NEXT ROUTE	7	NEXT ROUTE	7
NEXT STEP	42	NEXT STEP	43	NEXT STEP	44	NEXT STEP	45	NEXT STEP	46	NEXT STEP	47	NEXT STEP	48	NEXT STEP	49

Route 7:49		Route 7:50		Route 7:51		Route 7:52		Route 7:53		Route 7:54		Route 7:55		Route 7:56	
STEP INITIATION		STEP INITIATION		STEP INITIATION		STEP INITIATION		STEP INITIATION		STEP INITIATION		STEP INITIATION		STEP INITIATION	
Go Mode	Auto	Go Mode	Auto	Go Mode	Auto	Go Mode	Auto	Go Mode	Auto	Go Mode	Auto	Go Mode	Auto	Go Mode	Auto
Radio Input	dio Input 1	Radio Input	dio Input 1	Radio Input	dio Input 1	Radio Input	dio Input 1	Radio Input	dio Input 1	Radio Input	dio Input 1	Radio Input	dio Input 1	Radio Input	dio Input 1
Hard Wire Input		Hard Wire Input		Hard Wire Input		Hard Wire Input		Hard Wire Input		Hard Wire Input		Hard Wire Input		Hard Wire Input	
BIT	N/A	BIT	N/A	BIT	N/A	BIT	N/A	BIT	N/A	BIT	N/A	BIT	N/A	BIT	N/A
STEP ACTION		STEP ACTION		STEP ACTION		STEP ACTION		STEP ACTION		STEP ACTION		STEP ACTION		STEP ACTION	
Function	Rotate	Function	Forward	Function	Rotate	Function	Forward	Function	Rotate	Function	Forward	Function	Rotate	Function	Forward
Speed	33	Speed	33	Speed	33	Speed	33	Speed	33	Speed	33	Speed	33	Speed	33
Navigation	DR	Navigation	DR	Navigation	DR	Navigation	DR	Navigation	DR	Navigation	DR	Navigation	DR	Navigation	DR
Direction	Center	Direction	Center	Direction	Center	Direction	Center	Direction	Center	Direction	Center	Direction	Center	Direction	Center
Size	90	Size	1240	Size	-90	Size	2284	Size	90	Size	331	Size	90	Size	208
Loss Of Guidance	N/A	Loss Of Guidance	N/A	Loss Of Guidance	N/A	Loss Of Guidance	N/A	Loss Of Guidance	N/A	Loss Of Guidance	N/A	Loss Of Guidance	N/A	Loss Of Guidance	N/A
Obstacle Avoidance	1	Obstacle Avoidance	1	Obstacle Avoidance	1	Obstacle Avoidance	1	Obstacle Avoidance	1	Obstacle Avoidance	1	Obstacle Avoidance	1	Obstacle Avoidance	1
Output	N/a	Output	N/a	Output	N/a	Output	N/a	Output	N/a	Output	N/a	Output	N/a	Output	N/a
END OF STEP		END OF STEP		END OF STEP		END OF STEP		END OF STEP		END OF STEP		END OF STEP		END OF STEP	
END MODE	Distance	END MODE	Distance	END MODE	Distance	END MODE	Distance	END MODE	Distance	END MODE	Distance	END MODE	Distance	END MODE	Distance
END ACTION	Merge	END ACTION	Merge	END ACTION	Merge	END ACTION	Merge	END ACTION	Merge	END ACTION	Merge	END ACTION	Merge	END ACTION	Merge
NEXT ROUTE	7	NEXT ROUTE	7	NEXT ROUTE	7	NEXT ROUTE	7	NEXT ROUTE	7	NEXT ROUTE	7	NEXT ROUTE	7	NEXT ROUTE	7
NEXT STEP	50	NEXT STEP	51	NEXT STEP	52	NEXT STEP	53	NEXT STEP	54	NEXT STEP	55	NEXT STEP	56	NEXT STEP	57

Route 7:57		Route 7:58		Route 7:59		Route 7:60		Route 7:61		Route 7:62		Route 7:63		Route 7:64	
STEP INITIATION		STEP INITIATION		STEP INITIATION		STEP INITIATION		STEP INITIATION		STEP INITIATION		STEP INITIATION		STEP INITIATION	
Go Mode	Auto	Go Mode	Auto	Go Mode	Auto	Go Mode	Auto	Go Mode	Auto	Go Mode	Auto	Go Mode	Auto	Go Mode	Auto
Radio Input	dio Input 1	Radio Input	dio Input 1	Radio Input	dio Input 1	Radio Input	dio Input 1	Radio Input	dio Input 1	Radio Input	dio Input 1	Radio Input	dio Input 1	Radio Input	dio Input 1
Hard Wire Input		Hard Wire Input		Hard Wire Input		Hard Wire Input		Hard Wire Input		Hard Wire Input		Hard Wire Input		Hard Wire Input	
BIT	N/A	BIT	N/A	BIT	N/A	BIT	N/A	BIT	N/A	BIT	N/A	BIT	N/A	BIT	N/A
STEP ACTION		STEP ACTION		STEP ACTION		STEP ACTION		STEP ACTION		STEP ACTION		STEP ACTION		STEP ACTION	
Function	Rotate	Function	Reverse	Function	Dellay	Function	Forward	Function	Rotate	Function	Forward	Function	Rotate	Function	Forward
Speed	33	Speed	33	Speed	33	Speed	33	Speed	33	Speed	33	Speed	33	Speed	33
Navigation	DR	Navigation	DR	Navigation	DR	Navigation	DR	Navigation	DR	Navigation	DR	Navigation	DR	Navigation	DR
Direction	Center	Direction	Center	Direction	Center	Direction	Center	Direction	Center	Direction	Center	Direction	Center	Direction	Center
Size	-90	Size	62	Size	5	Size	62	Size	-90	Size	208	Size	-90	Size	331
Loss Of Guidance	N/A	Loss Of Guidance	N/A	Loss Of Guidance	N/A	Loss Of Guidance	N/A	Loss Of Guidance	N/A	Loss Of Guidance	N/A	Loss Of Guidance	N/A	Loss Of Guidance	N/A
Obstacle Avoidance	1	Obstacle Avoidance	1	Obstacle Avoidance	1	Obstacle Avoidance	1	Obstacle Avoidance	1	Obstacle Avoidance	1	Obstacle Avoidance	1	Obstacle Avoidance	1
Output	N/a	Output	N/a	Output	#7 Pin Drop	Output		Output		Output		Output		Output	
END OF STEP		END OF STEP		END OF STEP		END OF STEP		END OF STEP		END OF STEP		END OF STEP		END OF STEP	
END MODE	Distance	END MODE	Distance	END MODE	time	END MODE	Distance	END MODE	Distance	END MODE	Distance	END MODE	Distance	END MODE	Distance
END ACTION	Merge	END ACTION	Merge	END ACTION	Merge	END ACTION	Merge	END ACTION	Merge	END ACTION	Merge	END ACTION	Merge	END ACTION	Merge
NEXT ROUTE	7	NEXT ROUTE	7	NEXT ROUTE	7	NEXT ROUTE	7	NEXT ROUTE	7	NEXT ROUTE	7	NEXT ROUTE	7	NEXT ROUTE	7
NEXT STEP	58	NEXT STEP	59	NEXT STEP	60	NEXT STEP	61	NEXT STEP	62	NEXT STEP	63	NEXT STEP	64	NEXT STEP	65

Route 7:65		Route 7:66		Route 7:67		Route 7:68		Route 7:69		Route 7:70		Route 7:71		Route 7:72	
STEP INITIATION		**STEP INITIATION**		**STEP INITIATION**		**STEP INITIATION**		**STEP INITIATION**		**STEP INITIATION**		**STEP INITIATION**		**STEP INITIATION**	
Go Mode	Auto	**Go Mode**	Auto	**Go Mode**	Auto	**Go Mode**	Auto	**Go Mode**	Auto	**Go Mode**	Auto	**Go Mode**	Auto	**Go Mode**	Auto
Radio Input	dio Input 1-	**Radio Input**	dio Input 1-	**Radio Input**	dio Input 1-	**Radio Input**	dio Input 1-	**Radio Input**	dio Input 1-	**Radio Input**	dio Input 1-	**Radio Input**	dio Input 1-	**Radio Input**	dio Input 1-
Hard Wire Input		**Hard Wire Input**		**Hard Wire Input**	N/a	**Hard Wire Input**	N/a	**Hard Wire Input**	N/a	**Hard Wire Input**	N/a	**Hard Wire Input**	N/a	**Hard Wire Input**	N/a
BIT	N/A	**BIT**	N/A	**BIT**	N/A	**BIT**	N/A	**BIT**	N/A	**BIT**	N/A	**BIT**	N/A	**BIT**	N/A
STEP ACTION		**STEP ACTION**		**STEP ACTION**		**STEP ACTION**		**STEP ACTION**		**STEP ACTION**		**STEP ACTION**		**STEP ACTION**	
Function	Rotate	**Function**	Forward	**Function**	Rotate	**Function**	Forward	**Function**	Rotate	**Function**	Forward	**Function**	Rotate	**Function**	Forward
Speed	33	**Speed**	33	**Speed**	33	**Speed**	33	**Speed**	33	**Speed**	33	**Speed**	33	**Speed**	33
Navigation	DR	**Navigation**	DR	**Navigation**	DR	**Navigation**	DR	**Navigation**	DR	**Navigation**	DR	**Navigation**	DR	**Navigation**	DR
Direction	Center	**Direction**	Center	**Direction**	Center	**Direction**	Center	**Direction**	Center	**Direction**	Center	**Direction**	Center	**Direction**	Center
Size	-90	**Size**	2284	**Size**	90	**Size**	962	**Size**	-90	**Size**	525	**Size**	90	**Size**	417
Loss Of Guidance	N/A	**Loss Of Guidance**	N/A	**Loss Of Guidance**	N/A	**Loss Of Guidance**	N/A	**Loss Of Guidance**	N/A	**Loss Of Guidance**	N/A	**Loss Of Guidance**	N/A	**Loss Of Guidance**	N/A
Obstacle Avoidance	1	**Obstacle Avoidance**	1	**Obstacle Avoidance**	1	**Obstacle Avoidance**	1	**Obstacle Avoidance**	1	**Obstacle Avoidance**	1	**Obstacle Avoidance**	1	**Obstacle Avoidance**	1
Output		**Output**		**Output**	N/a	**Output**	N/a	**Output**	N/a	**Output**	N/a	**Output**	N/a	**Output**	N/a
END OF STEP		**END OF STEP**		**END OF STEP**		**END OF STEP**		**END OF STEP**		**END OF STEP**		**END OF STEP**		**END OF STEP**	
END MODE	Distance	**END MODE**	Distance	**END MODE**	Distance	**END MODE**	Distance	**END MODE**	Distance	**END MODE**	Distance	**END MODE**	Distance	**END MODE**	Distance
END ACTION	Merge	**END ACTION**	Merge	**END ACTION**	Merge	**END ACTION**	Merge	**END ACTION**	Merge	**END ACTION**	Merge	**END ACTION**	Merge	**END ACTION**	Merge
NEXT ROUTE	7	**NEXT ROUTE**	7	**NEXT ROUTE**	7	**NEXT ROUTE**	7	**NEXT ROUTE**	7	**NEXT ROUTE**	7	**NEXT ROUTE**	7	**NEXT ROUTE**	7
NEXT STEP	**66**	**NEXT STEP**	**67**	**NEXT STEP**	**68**	**NEXT STEP**	**69**	**NEXT STEP**	**70**	**NEXT STEP**	**71**	**NEXT STEP**	**72**	**NEXT STEP**	**73**

Route 7:73		Route 7:74		Route 0: 1	
STEP INITIATION		**STEP INITIATION**		**STEP INITIATION**	
Go Mode	Auto	**Go Mode**	Auto	**Go Mode**	nput Trigge
Radio Input	dio Input 1-	**Radio Input**	dio Input 1-	**Radio Input**	dio Input 1-
Hard Wire Input	N/a	**Hard Wire Input**	N/a	**Hard Wire Input**	N/a
BIT	N/A	**BIT**	N/A	**BIT**	BIT #1-#24
STEP ACTION		**STEP ACTION**		**STEP ACTION**	
Function	Rotate	**Function**	Reverse	**Function**	Auto
Speed	33	**Speed**	33	**Speed**	33
Navigation	DR	**Navigation**	DR	**Navigation**	DR
Direction	Center	**Direction**	Center	**Direction**	Center
Size	-90	**Size**	66	**Size**	66
Loss Of Guidance	N/A	**Loss Of Guidance**	N/A	**Loss Of Guidance**	N/A
Obstacle Avoidance	1	**Obstacle Avoidance**	1	**Obstacle Avoidance**	1
Output	N/a	**Output**	N/a	**Output**	N/a
END OF STEP		**END OF STEP**		**END OF STEP**	
END MODE	Distance	**END MODE**	Distance	**END MODE**	Distance
END ACTION	Merge	**END ACTION**	Merge	**END ACTION**	Merge
NEXT ROUTE	7	**NEXT ROUTE**	0	**NEXT ROUTE**	0
NEXT STEP	**74**	**NEXT STEP**	1	**NEXT STEP**	1

Tier 3 Route 8

Route 8:1		Route 8:2		Route 8:3		Route 8:4		Route 8:5		Route 8:6		Route 8:7		Route 8:8	
STEP INITIATION		**STEP INITIATION**		**STEP INITIATION**		**STEP INITIATION**		**STEP INITIATION**		**STEP INITIATION**		**STEP INITIATION**		**STEP INITIATION**	
Go Mode	nput Triggers	**Go Mode**	Auto	**Go Mode**	Auto	**Go Mode**	Auto	**Go Mode**	Auto	**Go Mode**	Auto	**Go Mode**	Auto	**Go Mode**	Auto
Radio Input	adio Input 1-2	**Radio Input**	dio Input 1-	**Radio Input**	dio Input 1-	**Radio Input**	dio Input 1-	**Radio Input**	dio Input 1-	**Radio Input**	dio Input 1-	**Radio Input**	dio Input 1-	**Radio Input**	dio Input 1-
Hard Wire Input	N/A	**Hard Wire Input**	N/A	**Hard Wire Input**	N/A	**Hard Wire Input**	N/A	**Hard Wire Input**	N/A	**Hard Wire Input**	N/A	**Hard Wire Input**	N/A	**Hard Wire Input**	N/A
BIT	Bit #1 off	**BIT**	N/A	**BIT**	N/A	**BIT**	N/A	**BIT**	N/A	**BIT**	N/A	**BIT**	N/A	**BIT**	N/A
Bit#11 On, #15 On	it #5 and 6 Off														
Home Position RFID	it #7 and 9 of														
	t #8 and 10 o														
STEP ACTION		**STEP ACTION**		**STEP ACTION**		**STEP ACTION**		**STEP ACTION**		**STEP ACTION**		**STEP ACTION**		**STEP ACTION**	
Function	Dispatch	**Function**	Forward	**Function**	Rotate	**Function**	Forward	**Function**	Rotate	**Function**	Forward	**Function**	Rotate	**Function**	Forward
Speed	N/A	**Speed**	33	**Speed**	33	**Speed**	33	**Speed**	33	**Speed**	33	**Speed**	33	**Speed**	33
Navigation	N/A	**Navigation**	DR	**Navigation**	DR	**Navigation**	DR	**Navigation**	DR	**Navigation**	DR	**Navigation**	DR	**Navigation**	DR
Direction	N/A	**Direction**	Center	**Direction**	Center	**Direction**	Center	**Direction**	Center	**Direction**	Center	**Direction**	Center	**Direction**	Center
Size	N/A	**Size**	66	**Size**	-90	**Size**	417	**Size**	-90	**Size**	525	**Size**	90	**Size**	962
Loss Of Guidance	N/A	**Loss Of Guidance**	N/A	**Loss Of Guidance**	N/A	**Loss Of Guidance**	N/A	**Loss Of Guidance**	N/A	**Loss Of Guidance**	N/A	**Loss Of Guidance**	N/A	**Loss Of Guidance**	N/A
Obstacle Avoidance	N/A	**Obstacle Avoidance**	1	**Obstacle Avoidance**	1	**Obstacle Avoidance**	1	**Obstacle Avoidance**	1	**Obstacle Avoidance**	1	**Obstacle Avoidance**	1	**Obstacle Avoidance**	1
Output	N/A	**Output**	N/A	**Output**	N/A	**Output**	N/A	**Output**	N/A	**Output**	N/A	**Output**	N/A	**Output**	N/A
END OF STEP		**END OF STEP**		**END OF STEP**		**END OF STEP**		**END OF STEP**		**END OF STEP**		**END OF STEP**		**END OF STEP**	
END MODE	N/A	**END MODE**	Distance	**END MODE**	Distance	**END MODE**	Distance	**END MODE**	Distance	**END MODE**	Distance	**END MODE**	Distance	**END MODE**	Distance
END ACTION	e Bit #11, #1	**END ACTION**	Merge	**END ACTION**	Merge	**END ACTION**	Merge	**END ACTION**	Merge	**END ACTION**	Merge	**END ACTION**	Merge	**END ACTION**	Merge
NEXT ROUTE	8	**NEXT ROUTE**	8	**NEXT ROUTE**	8	**NEXT ROUTE**	8	**NEXT ROUTE**	8	**NEXT ROUTE**	8	**NEXT ROUTE**	8	**NEXT ROUTE**	8
NEXT STEP	**2**	**NEXT STEP**	**3**	**NEXT STEP**	**4**	**NEXT STEP**	**5**	**NEXT STEP**	**6**	**NEXT STEP**	**7**	**NEXT STEP**	**8**	**NEXT STEP**	**9**

Route 8:9		Route 8:10		Route 8:11		Route 8:12		Route 8:13		Route 8:14		Route 8:15		Route 8:16	
STEP INITIATION		**STEP INITIATION**		**STEP INITIATION**		**STEP INITIATION**		**STEP INITIATION**		**STEP INITIATION**		**STEP INITIATION**		**STEP INITIATION**	
Go Mode	Auto	**Go Mode**	Auto	**Go Mode**	Auto	**Go Mode**	Auto	**Go Mode**	Auto	**Go Mode**	Auto	**Go Mode**	Auto	**Go Mode**	Auto
Radio Input	dio Input 1-	**Radio Input**	dio Input 1-	**Radio Input**	dio Input 1-	**Radio Input**	dio Input 1-	**Radio Input**	dio Input 1-	**Radio Input**	dio Input 1-	**Radio Input**	dio Input 1-	**Radio Input**	dio Input 1-
Hard Wire Input	N/A	**Hard Wire Input**	N/A	**Hard Wire Input**	N/A	**Hard Wire Input**	N/A	**Hard Wire Input**	N/A	**Hard Wire Input**	N/A	**Hard Wire Input**	N/A	**Hard Wire Input**	N/A
BIT	N/A	**BIT**	N/A	**BIT**	N/A	**BIT**	N/A	**BIT**	N/A	**BIT**	N/A	**BIT**	N/A	**BIT**	N/A
STEP ACTION		**STEP ACTION**		**STEP ACTION**		**STEP ACTION**		**STEP ACTION**		**STEP ACTION**		**STEP ACTION**		**STEP ACTION**	
Function	Rotate	**Function**	Forward	**Function**	Rotate	**Function**	Forward	**Function**	Rotate	**Function**	Forward	**Function**	Rotate	**Function**	Reverse
Speed	33	**Speed**	33	**Speed**	33	**Speed**	33	**Speed**	33	**Speed**	33	**Speed**	33	**Speed**	33
Navigation	DR	**Navigation**	DR	**Navigation**	DR	**Navigation**	DR	**Navigation**	DR	**Navigation**	DR	**Navigation**	DR	**Navigation**	DR
Direction	Center	**Direction**	Center	**Direction**	Center	**Direction**	Center	**Direction**	Center	**Direction**	Center	**Direction**	Center	**Direction**	Center
Size	-90	**Size**	2284	**Size**	90	**Size**	331	**Size**	90	**Size**	274	**Size**	-90	**Size**	62
Loss Of Guidance	N/A	**Loss Of Guidance**	N/A	**Loss Of Guidance**	N/A	**Loss Of Guidance**	N/A	**Loss Of Guidance**	N/A	**Loss Of Guidance**	N/A	**Loss Of Guidance**	N/A	**Loss Of Guidance**	N/A
Obstacle Avoidance	1	**Obstacle Avoidance**	1	**Obstacle Avoidance**	1	**Obstacle Avoidance**	1	**Obstacle Avoidance**	1	**Obstacle Avoidance**	1	**Obstacle Avoidance**	1	**Obstacle Avoidance**	1
Output	N/A	**Output**	N/A	**Output**	N/A	**Output**	N/A	**Output**	N/A	**Output**	N/A	**Output**	N/A	**Output**	#6 Pin Up
END OF STEP		**END OF STEP**		**END OF STEP**		**END OF STEP**		**END OF STEP**		**END OF STEP**		**END OF STEP**		**END OF STEP**	
END MODE	Distance	**END MODE**	Distance	**END MODE**	Distance	**END MODE**	Distance	**END MODE**	Distance	**END MODE**	Distance	**END MODE**	Distance	**END MODE**	Distance
END ACTION	Merge	**END ACTION**	Merge	**END ACTION**	Merge	**END ACTION**	Merge	**END ACTION**	Merge	**END ACTION**	Merge	**END ACTION**	Merge	**END ACTION**	Merge
NEXT ROUTE	8	**NEXT ROUTE**	8	**NEXT ROUTE**	8	**NEXT ROUTE**	8	**NEXT ROUTE**	8	**NEXT ROUTE**	8	**NEXT ROUTE**	8	**NEXT ROUTE**	8
NEXT STEP	**10**	**NEXT STEP**	**11**	**NEXT STEP**	**12**	**NEXT STEP**	**13**	**NEXT STEP**	**14**	**NEXT STEP**	**15**	**NEXT STEP**	**16**	**NEXT STEP**	**17**

Route 8:17		Route 8:18		Route 8:19		Route 8:20		Route 8:21		Route 8:22		Route 8:23		Route 8:24	
STEP INITIATION		**STEP INITIATION**		**STEP INITIATION**		**STEP INITIATION**		**STEP INITIATION**		**STEP INITIATION**		**STEP INITIATION**		**STEP INITIATION**	
Go Mode	Auto	**Go Mode**	Auto	**Go Mode**	Auto	**Go Mode**	Auto	**Go Mode**	Auto	**Go Mode**	Auto	**Go Mode**	Auto	**Go Mode**	Auto
Radio Input	dio Input 1-	**Radio Input**	dio Input 1-	**Radio Input**	dio Input 1-	**Radio Input**	dio Input 1-	**Radio Input**	dio Input 1-	**Radio Input**	dio Input 1-	**Radio Input**	dio Input 1-	**Radio Input**	dio Input 1-
Hard Wire Input	N/A	**Hard Wire Input**	N/A	**Hard Wire Input**	N/A	**Hard Wire Input**	N/A	**Hard Wire Input**	N/A	**Hard Wire Input**	N/A	**Hard Wire Input**	N/A	**Hard Wire Input**	N/A
BIT	N/A	**BIT**	N/A	**BIT**	N/A	**BIT**	N/A	**BIT**	N/A	**BIT**	N/A	**BIT**	N/A	**BIT**	N/A
STEP ACTION		**STEP ACTION**		**STEP ACTION**		**STEP ACTION**		**STEP ACTION**		**EP ACTION**		**STEP ACTION**		**STEP ACTION**	
Function	Forward	**Function**	Rotate	**Function**	Forward	**Function**	Rotate	**Function**	Forward	**Function**	Rotate	**Function**	Forward	**Function**	Rotate
Speed	33	**Speed**	33	**Speed**	33	**Speed**	33	**Speed**	33	**Speed**	33	**Speed**	33	**Speed**	33
Navigation	DR	**Navigation**	DR	**Navigation**	DR	**Navigation**	DR	**Navigation**	DR	**Navigation**	DR	**Navigation**	DR	**Navigation**	DR
Direction	Center	**Direction**	Center	**Direction**	Center	**Direction**	Center	**Direction**	Center	**Direction**	Center	**Direction**	Center	**Direction**	Center
Size	62	**Size**	-90	**Size**	274	**Size**	-90	**Size**	331	**Size**	-90	**Size**	2284	**Size**	90
Loss Of Guidance	N/A	**Loss Of Guidance**	N/A	**Loss Of Guidance**	N/A	**Loss Of Guidance**	N/A	**Loss Of Guidance**	N/A	**Loss Of Guidance**	N/A	**Loss Of Guidance**	N/A	**Loss Of Guidance**	N/A
Obstacle Avoidance	1	**Obstacle Avoidance**	1	**Obstacle Avoidance**	1	**Obstacle Avoidance**	1	**Obstacle Avoidance**	1	**Obstacle Avoidance**	1	**Obstacle Avoidance**	1	**Obstacle Avoidance**	1
Output	N/A	**Output**	N/A	**Output**	N/A	**Output**	N/A	**Output**	N/A	**Output**	N/A	**Output**	N/A	**Output**	N/A
END OF STEP		**END OF STEP**		**END OF STEP**		**END OF STEP**		**END OF STEP**		**ID OF STEP**		**END OF STEP**		**END OF STEP**	
END MODE	Distance	**END MODE**	Distance	**END MODE**	Distance	**END MODE**	Distance	**END MODE**	Distance	**END MODE**	Distance	**END MODE**	Distance	**END MODE**	Distance
END ACTION	Merge	**END ACTION**	Merge	**END ACTION**	Merge	**END ACTION**	Merge	**END ACTION**	Merge	**END ACTION**	Merge	**END ACTION**	Merge	**END ACTION**	Merge
NEXT ROUTE	8	**NEXT ROUTE**	8	**NEXT ROUTE**	8	**NEXT ROUTE**	8	**NEXT ROUTE**	8	**NEXT ROUTE**	8	**NEXT ROUTE**	8	**NEXT ROUTE**	8
NEXT STEP	**18**	**NEXT STEP**	**19**	**NEXT STEP**	**20**	**NEXT STEP**	**21**	**NEXT STEP**	**22**	**NEXT STEP**	**23**	**NEXT STEP**	**24**	**NEXT STEP**	**25**

Route 8:25		Route 8:26		Route 8:27		Route 8:28		Route 8:29		Route 8:30		Route 8:31		Route 8:32	
STEP INITIATION		**STEP INITIATION**		**STEP INITIATION**		**STEP INITIATION**		**STEP INITIATION**		**STEP INITIATION**		**STEP INITIATION**		**STEP INITIATION**	
Go Mode	Auto	**Go Mode**	Auto	**Go Mode**	Auto	**Go Mode**	Auto	**Go Mode**	Auto	**Go Mode**	Auto	**Go Mode**	Auto	**Go Mode**	Auto
Radio Input	dio Input 1-	**Radio Input**	dio Input 1-	**Radio Input**	dio Input 1-	**Radio Input**	dio Input 1-	**Radio Input**	dio Input 1-	**Radio Input**	dio Input 1-	**Radio Input**	dio Input 1-	**Radio Input**	dio Input 1-
Hard Wire Input	N/A	**Hard Wire Input**	N/A	**Hard Wire Input**	N/A	**Hard Wire Input**	N/A	**Hard Wire Input**	N/A	**Hard Wire Input**	N/A	**Hard Wire Input**	N/A	**Hard Wire Input**	Cart prese
BIT	N/A	**BIT**	N/A	**BIT**	N/A	**BIT**	N/A	**BIT**	N/A	**BIT**	N/A	**BIT**	N/A	**BIT**	N/A
STEP ACTION		**STEP ACTION**		**STEP ACTION**		**STEP ACTION**		**STEP ACTION**		**STEP ACTION**		**STEP ACTION**		**STEP ACTION**	
Function	Forward	**Function**	Rotate	**Function**	Reverse	**Function**	Delay	**Function**	Forward	**Function**	Rotate	**Function**	Reverse	**Function**	Forward
Speed	33	**Speed**	33	**Speed**	33	**Speed**	33	**Speed**	33	**Speed**	33	**Speed**	33	**Speed**	33
Navigation	DR	**Navigation**	DR	**Navigation**	DR	**Navigation**	DR	**Navigation**	DR	**Navigation**	DR	**Navigation**	DR	**Navigation**	DR
Direction	Center	**Direction**	Center	**Direction**	Center	**Direction**	Center	**Direction**	Center	**Direction**	Center	**Direction**	Center	**Direction**	Center
Size	1240	**Size**	90	**Size**	279	**Size**	5	**Size**	104	**Size**	-90	**Size**	102	**Size**	102
Loss Of Guidance	N/A	**Loss Of Guidance**	N/A	**Loss Of Guidance**	N/A	**Loss Of Guidance**	N/A	**Loss Of Guidance**	N/A	**Loss Of Guidance**	N/A	**Loss Of Guidance**	N/A	**Loss Of Guidance**	N/A
Obstacle Avoidance	1	**Obstacle Avoidance**	1	**Obstacle Avoidance**	1	**Obstacle Avoidance**	1	**Obstacle Avoidance**	1	**Obstacle Avoidance**	1	**Obstacle Avoidance**	1	**Obstacle Avoidance**	1
Output	N/A	**Output**	N/A	**Output**	N/A	**Output**	#7 Pin Drop	**Output**		**Output**		**Output**	#6 pin up	**Output**	N/a
END OF STEP		**END OF STEP**		**END OF STEP**		**END OF STEP**		**END OF STEP**		**END OF STEP**		**END OF STEP**		**END OF STEP**	
END MODE	Distance	**END MODE**	Distance	**END MODE**	Distance	**END MODE**	time	**END MODE**	Distance	**END MODE**	Distance	**END MODE**	Distance	**END MODE**	Distance
END ACTION	Merge	**END ACTION**	Merge	**END ACTION**	Merge	**END ACTION**	Merge	**END ACTION**	Merge	**END ACTION**	Merge	**END ACTION**	Merge	**END ACTION**	Merge
NEXT ROUTE	8	**NEXT ROUTE**	8	**NEXT ROUTE**	8	**NEXT ROUTE**	8	**NEXT ROUTE**	8	**NEXT ROUTE**	8	**NEXT ROUTE**	8	**NEXT ROUTE**	8
NEXT STEP	**26**	**NEXT STEP**	**27**	**NEXT STEP**	**28**	**NEXT STEP**	**29**	**NEXT STEP**	**30**	**NEXT STEP**	**31**	**NEXT STEP**	**32**	**NEXT STEP**	**33**

Route 8:33		Route 8:34		Route 8:35		Route 8:36		Route 8:37		Route 8:38		Route 8:39		Route 8:40	
STEP INITIATION		STEP INITIATION		STEP INITIATION		STEP INITIATION		STEP INITIATION		STEP INITIATION		STEP INITIATION		STEP INITIATION	
Go Mode	Auto	Go Mode	Auto	Go Mode	Auto	Go Mode	Auto	Go Mode	Auto	Go Mode	Auto	Go Mode	Auto	Go Mode	Auto
Radio Input	dio Input 1	Radio Input	dio Input 1	Radio Input	dio Input 1	Radio Input	dio Input 1	Radio Input	dio Input 1	Radio Input	dio Input 1	Radio Input	dio Input 1	Radio Input	dio Input 1
Hard Wire Input	N/A	Hard Wire Input	N/A	Hard Wire Input	N/A	Hard Wire Input	N/A	Hard Wire Input	N/A	Hard Wire Input	N/A	Hard Wire Input	N/A	Hard Wire Input	N/A
BIT	N/A	BIT	N/A	BIT	N/A	BIT	N/A	BIT	N/A	BIT	N/A	BIT	N/A	BIT	N/A
STEP ACTION		STEP ACTION		STEP ACTION		STEP ACTION		STEP ACTION		STEP ACTION		STEP ACTION		STEP ACTION	
Function	Rotate	Function	Reverse	Function	Delay	Function	Forward	Function	Rotate	Function	Reverse	Function	Forward	Function	Rotate
Speed	33	Speed	33	Speed	33	Speed	33	Speed	33	Speed	33	Speed	33	Speed	33
Navigation	DR	Navigation	DR	Navigation	DR	Navigation	DR	Navigation	DR	Navigation	DR	Navigation	DR	Navigation	DR
Direction	Center	Direction	Center	Direction	Center	Direction	Center	Direction	Center	Direction	Center	Direction	Center	Direction	Center
Size	45	Size	99	Size	5	Size	99	Size	45	Size	104	Size	104	Size	-90
Loss Of Guidance	N/A	Loss Of Guidance	N/A	Loss Of Guidance	N/A	Loss Of Guidance	N/A	Loss Of Guidance	N/A	Loss Of Guidance	N/A	Loss Of Guidance	N/A	Loss Of Guidance	N/A
Obstacle Avoidance	1	Obstacle Avoidance	1	Obstacle Avoidance	1	Obstacle Avoidance	1	Obstacle Avoidance	1	Obstacle Avoidance	1	Obstacle Avoidance	1	Obstacle Avoidance	1
Output	N/a	Output	N/a	Output	#7 pin drop	Output	N/a	Output	N/a	Output	#7 pin raise	Output	N/A	Output	N/A
END OF STEP		END OF STEP		END OF STEP		END OF STEP		END OF STEP		END OF STEP		END OF STEP		END OF STEP	
END MODE	Distance	END MODE	Distance	END MODE	time	END MODE	Distance	END MODE	Distance	END MODE	Distance	END MODE	Distance	END MODE	Distance
END ACTION	Merge	END ACTION	Merge	END ACTION	Merge	END ACTION	Merge	END ACTION	Merge	END ACTION	Merge	END ACTION	Merge	END ACTION	Merge
NEXT ROUTE	8	NEXT ROUTE	8	NEXT ROUTE	8	NEXT ROUTE	8	NEXT ROUTE	8	NEXT ROUTE	8	NEXT ROUTE	8	NEXT ROUTE	8
NEXT STEP	34	NEXT STEP	35	NEXT STEP	36	NEXT STEP	37	NEXT STEP	38	NEXT STEP	39	NEXT STEP	40	NEXT STEP	41

Route 8:41		Route 8:42		Route 8:43		Route 8:44		Route 8:45		Route 8:46		Route 8:47		Route 8:48	
STEP INITIATION		STEP INITIATION		STEP INITIATION		STEP INITIATION		STEP INITIATION		STEP INITIATION		STEP INITIATION		STEP INITIATION	
Go Mode	Auto	Go Mode	Auto	Go Mode	Auto	Go Mode	Auto	Go Mode	Auto	Go Mode	Auto	Go Mode	Auto	Go Mode	Auto
Radio Input	dio Input 1	Radio Input	dio Input 1	Radio Input	dio Input 1	Radio Input	dio Input 1	Radio Input	dio Input 1	Radio Input	dio Input 1	Radio Input	dio Input 1	Radio Input	dio Input 1
Hard Wire Input	N/A	Hard Wire Input	N/A	Hard Wire Input	N/A	Hard Wire Input	N/A	Hard Wire Input	N/A	Hard Wire Input	Cart Prese	Hard Wire Input		Hard Wire Input	
BIT	N/A	BIT	N/A	BIT	N/A	BIT	N/A	BIT	N/A	BIT	N/A	BIT	N/A	BIT	N/A
STEP ACTION		STEP ACTION		STEP ACTION		STEP ACTION		STEP ACTION		STEP ACTION		STEP ACTION		STEP ACTION	
Function	Reverse	Function	Delay	Function	Forward	Function	Rotate	Function	Reverse	Function	Forward	Function	Rotate	Function	Forward
Speed	33	Speed	33	Speed	33	Speed	33	Speed	33	Speed	33	Speed	33	Speed	33
Navigation	DR	Navigation	DR	Navigation	DR	Navigation	DR	Navigation	DR	Navigation	DR	Navigation	DR	Navigation	DR
Direction	Center	Direction	Center	Direction	Center	Direction	Center	Direction	Center	Direction	Center	Direction	Center	Direction	Center
Size	102	Size	5	Size	102	Size	45	Size	99	Size	99	Size	45	Size	174
Loss Of Guidance	N/A	Loss Of Guidance	N/A	Loss Of Guidance	N/A	Loss Of Guidance	N/A	Loss Of Guidance	N/A	Loss Of Guidance	N/A	Loss Of Guidance	N/A	Loss Of Guidance	N/A
Obstacle Avoidance	1	Obstacle Avoidance	1	Obstacle Avoidance	1	Obstacle Avoidance	1	Obstacle Avoidance	1	Obstacle Avoidance	1	Obstacle Avoidance	1	Obstacle Avoidance	1
Output	N/A	Output	#7 Pin Drop	Output	N/a	Output	N/a	Output	#6 Pin Raise	Output	N/a	Output	N/a	Output	N/a
END OF STEP		END OF STEP		END OF STEP		END OF STEP		END OF STEP		END OF STEP		END OF STEP		END OF STEP	
END MODE	Distance	END MODE	Time	END MODE	Distance	END MODE	Distance	END MODE	Distance	END MODE	Distance	END MODE	Distance	END MODE	Distance
END ACTION	Merge	END ACTION	Merge	END ACTION	Merge	END ACTION	Merge	END ACTION	Merge	END ACTION	Merge	END ACTION	Merge	END ACTION	Merge
NEXT ROUTE	8	NEXT ROUTE	8	NEXT ROUTE	8	NEXT ROUTE	8	NEXT ROUTE	8	NEXT ROUTE	8	NEXT ROUTE	8	NEXT ROUTE	8
NEXT STEP	42	NEXT STEP	43	NEXT STEP	44	NEXT STEP	45	NEXT STEP	46	NEXT STEP	47	NEXT STEP	48	NEXT STEP	49

Route 8:49		Route 8:50		Route 8:51		Route 8:52		Route 8:53		Route 8:54		Route 8:55		Route 8:56	
STEP INITIATION		STEP INITIATION		STEP INITIATION		STEP INITIATION		STEP INITIATION		STEP INITIATION		STEP INITIATION		STEP INITIATION	
Go Mode	Auto	Go Mode	Auto	Go Mode	Auto	Go Mode	Auto	Go Mode	Auto	Go Mode	Auto	Go Mode	Auto	Go Mode	Auto
Radio Input	dio Input 1	Radio Input	dio Input 1	Radio Input	dio Input 1	Radio Input	dio Input 1	Radio Input	dio Input 1	Radio Input	dio Input 1	Radio Input	dio Input 1	Radio Input	dio Input 1
Hard Wire Input		Hard Wire Input		Hard Wire Input		Hard Wire Input		Hard Wire Input		Hard Wire Input		Hard Wire Input		Hard Wire Input	
BIT	N/A	BIT	N/A	BIT	N/A	BIT	N/A	BIT	N/A	BIT	N/A	BIT	N/A	BIT	N/A
STEP ACTION		STEP ACTION		STEP ACTION		STEP ACTION		STEP ACTION		STEP ACTION		STEP ACTION		STEP ACTION	
Function	Rotate	Function	Forward	Function	Rotate	Function	Forward	Function	Rotate	Function	Forward	Function	Rotate	Function	Forward
Speed	33	Speed	33	Speed	33	Speed	33	Speed	33	Speed	33	Speed	33	Speed	33
Navigation	DR	Navigation	DR	Navigation	DR	Navigation	DR	Navigation	DR	Navigation	DR	Navigation	DR	Navigation	DR
Direction	Center	Direction	Center	Direction	Center	Direction	Center	Direction	Center	Direction	Center	Direction	Center	Direction	Center
Size	90	Size	1240	Size	-90	Size	2284	Size	90	Size	331	Size	90	Size	274
Loss Of Guidance	N/A	Loss Of Guidance	N/A	Loss Of Guidance	N/A	Loss Of Guidance	N/A	Loss Of Guidance	N/A	Loss Of Guidance	N/A	Loss Of Guidance	N/A	Loss Of Guidance	N/A
Obstacle Avoidance	1	Obstacle Avoidance	1	Obstacle Avoidance	1	Obstacle Avoidance	1	Obstacle Avoidance	1	Obstacle Avoidance	1	Obstacle Avoidance	1	Obstacle Avoidance	1
Output	N/a	Output	N/a	Output	N/a	Output	N/a	Output	N/a	Output	N/a	Output	N/a	Output	N/a
END OF STEP		END OF STEP		END OF STEP		END OF STEP		END OF STEP		END OF STEP		END OF STEP		END OF STEP	
END MODE	Distance	END MODE	Distance	END MODE	Distance	END MODE	Distance	END MODE	Distance	END MODE	Distance	END MODE	Distance	END MODE	Distance
END ACTION	Merge	END ACTION	Merge	END ACTION	Merge	END ACTION	Merge	END ACTION	Merge	END ACTION	Merge	END ACTION	Merge	END ACTION	Merge
NEXT ROUTE	8	NEXT ROUTE	8	NEXT ROUTE	8	NEXT ROUTE	8	NEXT ROUTE	8	NEXT ROUTE	8	NEXT ROUTE	8	NEXT ROUTE	8
NEXT STEP	50	NEXT STEP	51	NEXT STEP	52	NEXT STEP	53	NEXT STEP	54	NEXT STEP	55	NEXT STEP	56	NEXT STEP	57

Route 8:57		Route 8:58		Route 8:59		Route 8:60		Route 8:61		Route 8:62		Route 8:63		Route 8:64	
STEP INITIATION		STEP INITIATION		STEP INITIATION		STEP INITIATION		STEP INITIATION		STEP INITIATION		STEP INITIATION		STEP INITIATION	
Go Mode	Auto	Go Mode	Auto	Go Mode	Auto	Go Mode	Auto	Go Mode	Auto	Go Mode	Auto	Go Mode	Auto	Go Mode	Auto
Radio Input	dio Input 1	Radio Input	dio Input 1	Radio Input	dio Input 1	Radio Input	dio Input 1	Radio Input	dio Input 1	Radio Input	dio Input 1	Radio Input	dio Input 1	Radio Input	dio Input 1
Hard Wire Input		Hard Wire Input		Hard Wire Input		Hard Wire Input		Hard Wire Input		Hard Wire Input		Hard Wire Input		Hard Wire Input	
BIT	N/A	BIT	N/A	BIT	N/A	BIT	N/A	BIT	N/A	BIT	N/A	BIT	N/A	BIT	N/A
STEP ACTION		STEP ACTION		STEP ACTION		STEP ACTION		STEP ACTION		STEP ACTION		STEP ACTION		STEP ACTION	
Function	Rotate	Function	Reverse	Function	Dellay	Function	Forward	Function	Rotate	Function	Forward	Function	Rotate	Function	Forward
Speed	33	Speed	33	Speed	33	Speed	33	Speed	33	Speed	33	Speed	33	Speed	33
Navigation	DR	Navigation	DR	Navigation	DR	Navigation	DR	Navigation	DR	Navigation	DR	Navigation	DR	Navigation	DR
Direction	Center	Direction	Center	Direction	Center	Direction	Center	Direction	Center	Direction	Center	Direction	Center	Direction	Center
Size	-90	Size	62	Size	5	Size	62	Size	-90	Size	274	Size	-90	Size	331
Loss Of Guidance	N/A	Loss Of Guidance	N/A	Loss Of Guidance	N/A	Loss Of Guidance	N/A	Loss Of Guidance	N/A	Loss Of Guidance	N/A	Loss Of Guidance	N/A	Loss Of Guidance	N/A
Obstacle Avoidance	1	Obstacle Avoidance	1	Obstacle Avoidance	1	Obstacle Avoidance	1	Obstacle Avoidance	1	Obstacle Avoidance	1	Obstacle Avoidance	1	Obstacle Avoidance	1
Output	N/a	Output	N/a	Output	#7 Pin Drop	Output		Output		Output		Output		Output	
END OF STEP		END OF STEP		END OF STEP		END OF STEP		END OF STEP		END OF STEP		END OF STEP		END OF STEP	
END MODE	Distance	END MODE	Distance	END MODE	time	END MODE	Distance	END MODE	Distance	END MODE	Distance	END MODE	Distance	END MODE	Distance
END ACTION	Merge	END ACTION	Merge	END ACTION	Merge	END ACTION	Merge	END ACTION	Merge	END ACTION	Merge	END ACTION	Merge	END ACTION	Merge
NEXT ROUTE	8	NEXT ROUTE	8	NEXT ROUTE	8	NEXT ROUTE	8	NEXT ROUTE	8	NEXT ROUTE	8	NEXT ROUTE	8	NEXT ROUTE	8
NEXT STEP	58	NEXT STEP	59	NEXT STEP	60	NEXT STEP	61	NEXT STEP	62	NEXT STEP	63	NEXT STEP	64	NEXT STEP	65

Route 8:65		Route 8:66		Route 8:67		Route 8:68		Route 8:69		Route 8:70		Route 8:71		Route 8:72	
STEP INITIATION		**STEP INITIATION**		**STEP INITIATION**		**STEP INITIATION**		**STEP INITIATION**		**STEP INITIATION**		**STEP INITIATION**		**STEP INITIATION**	
Go Mode	Auto	**Go Mode**	Auto	**Go Mode**	Auto	**Go Mode**	Auto	**Go Mode**	Auto	**Go Mode**	Auto	**Go Mode**	Auto	**Go Mode**	Auto
Radio Input	dio Input 1-	**Radio Input**	dio Input 1-	**Radio Input**	dio Input 1-	**Radio Input**	dio Input 1-	**Radio Input**	dio Input 1-	**Radio Input**	dio Input 1-	**Radio Input**	dio Input 1-	**Radio Input**	dio Input 1-
Hard Wire Input		**Hard Wire Input**		**Hard Wire Input**	N/a	**Hard Wire Input**	N/a	**Hard Wire Input**	N/a	**Hard Wire Input**	N/a	**Hard Wire Input**	N/a	**Hard Wire Input**	N/a
BIT	N/A	**BIT**	N/A	**BIT**	N/A	**BIT**	N/A	**BIT**	N/A	**BIT**	N/A	**BIT**	N/A	**BIT**	N/A
STEP ACTION		**STEP ACTION**		**STEP ACTION**		**STEP ACTION**		**STEP ACTION**		**STEP ACTION**		**STEP ACTION**		**STEP ACTION**	
Function	Rotate	**Function**	Forward	**Function**	Rotate	**Function**	Forward	**Function**	Rotate	**Function**	Forward	**Function**	Rotate	**Function**	Forward
Speed	33	**Speed**	33	**Speed**	33	**Speed**	33	**Speed**	33	**Speed**	33	**Speed**	33	**Speed**	33
Navigation	DR	**Navigation**	DR	**Navigation**	DR	**Navigation**	DR	**Navigation**	DR	**Navigation**	DR	**Navigation**	DR	**Navigation**	DR
Direction	Center	**Direction**	Center	**Direction**	Center	**Direction**	Center	**Direction**	Center	**Direction**	Center	**Direction**	Center	**Direction**	Center
Size	-90	**Size**	2284	**Size**	90	**Size**	962	**Size**	-90	**Size**	525	**Size**	90	**Size**	417
Loss Of Guidance	N/A	**Loss Of Guidance**	N/A	**Loss Of Guidance**	N/A	**Loss Of Guidance**	N/A	**Loss Of Guidance**	N/A	**Loss Of Guidance**	N/A	**Loss Of Guidance**	N/A	**Loss Of Guidance**	N/A
Obstacle Avoidance	1	**Obstacle Avoidance**	1	**Obstacle Avoidance**	1	**Obstacle Avoidance**	1	**Obstacle Avoidance**	1	**Obstacle Avoidance**	1	**Obstacle Avoidance**	1	**Obstacle Avoidance**	1
Output		**Output**		**Output**	N/a	**Output**	N/a	**Output**	N/a	**Output**	N/a	**Output**	N/a	**Output**	N/a
END OF STEP		**END OF STEP**		**END OF STEP**		**END OF STEP**		**END OF STEP**		**END OF STEP**		**END OF STEP**		**END OF STEP**	
END MODE	Distance	**END MODE**	Distance	**END MODE**	Distance	**END MODE**	Distance	**END MODE**	Distance	**END MODE**	Distance	**END MODE**	Distance	**END MODE**	Distance
END ACTION	Merge	**END ACTION**	Merge	**END ACTION**	Merge	**END ACTION**	Merge	**END ACTION**	Merge	**END ACTION**	Merge	**END ACTION**	Merge	**END ACTION**	Merge
NEXT ROUTE	8	**NEXT ROUTE**	8	**NEXT ROUTE**	8	**NEXT ROUTE**	8	**NEXT ROUTE**	8	**NEXT ROUTE**	8	**NEXT ROUTE**	8	**NEXT ROUTE**	8
NEXT STEP	**66**	**NEXT STEP**	**67**	**NEXT STEP**	**68**	**NEXT STEP**	**69**	**NEXT STEP**	**70**	**NEXT STEP**	**71**	**NEXT STEP**	**72**	**NEXT STEP**	**73**

Route 8:73		Route 8:74		Route 0: 1	
STEP INITIATION		**STEP INITIATION**		**STEP INITIATION**	
Go Mode	Auto	**Go Mode**	Auto	**Go Mode**	nput Trigge
Radio Input	dio Input 1-	**Radio Input**	dio Input 1-	**Radio Input**	dio Input 1-
Hard Wire Input	N/a	**Hard Wire Input**	N/a	**Hard Wire Input**	N/a
BIT	N/A	**BIT**	N/A	**BIT**	BIT #1-#24
STEP ACTION		**STEP ACTION**		**STEP ACTION**	
Function	Rotate	**Function**	Reverse	**Function**	Auto
Speed	33	**Speed**	33	**Speed**	33
Navigation	DR	**Navigation**	DR	**Navigation**	DR
Direction	Center	**Direction**	Center	**Direction**	Center
Size	-90	**Size**	66	**Size**	66
Loss Of Guidance	N/A	**Loss Of Guidance**	N/A	**Loss Of Guidance**	N/A
Obstacle Avoidance	1	**Obstacle Avoidance**	1	**Obstacle Avoidance**	1
Output	N/a	**Output**	N/a	**Output**	N/a
END OF STEP		**END OF STEP**		**END OF STEP**	
END MODE	Distance	**END MODE**	Distance	**END MODE**	Distance
END ACTION	Merge	**END ACTION**	Merge	**END ACTION**	Merge
NEXT ROUTE	8	**NEXT ROUTE**	0	**NEXT ROUTE**	0
NEXT STEP	**74**	**NEXT STEP**	1	**NEXT STEP**	1

Tier 3 Route 9

Route 9:1		Route 9:2		Route 9:3		Route 9:4		Route 9:5		Route 9:6		Route 9:7		Route 9:8	
STEP INITIATION		**STEP INITIATION**		**STEP INITIATION**		**STEP INITIATION**		**STEP INITIATION**		**STEP INITIATION**		**STEP INITIATION**		**STEP INITIATION**	
Go Mode	nput Triggers	**Go Mode**	Auto	**Go Mode**	Auto	**Go Mode**	Auto	**Go Mode**	Auto	**Go Mode**	Auto	**Go Mode**	Auto	**Go Mode**	Auto
Radio Input	adio Input 1-2	**Radio Input**	dio Input 1-	**Radio Input**	dio Input 1-	**Radio Input**	dio Input 1-	**Radio Input**	dio Input 1-	**Radio Input**	dio Input 1-	**Radio Input**	dio Input 1-	**Radio Input**	dio Input 1-
Hard Wire Input	N/A	**Hard Wire Input**	N/A	**Hard Wire Input**	N/A	**Hard Wire Input**	N/A	**Hard Wire Input**	N/A	**Hard Wire Input**	N/A	**Hard Wire Input**	N/A	**Hard Wire Input**	N/A
BIT	Bit #1 off	**BIT**	N/A	**BIT**	N/A	**BIT**	N/A	**BIT**	N/A	**BIT**	N/A	**BIT**	N/A	**BIT**	N/A
Bit#11 On, #16 On	it #5 and 6 Off														
Home Position RFID	it #7 and 9 of														
	t #8 and 10 o														
STEP ACTION		**STEP ACTION**		**STEP ACTION**		**STEP ACTION**		**STEP ACTION**		**STEP ACTION**		**STEP ACTION**		**STEP ACTION**	
Function	Dispatch	**Function**	Forward	**Function**	Rotate	**Function**	Forward	**Function**	Rotate	**Function**	Forward	**Function**	Rotate	**Function**	Forward
Speed	N/A	**Speed**	33	**Speed**	33	**Speed**	33	**Speed**	33	**Speed**	33	**Speed**	33	**Speed**	33
Navigation	N/A	**Navigation**	DR	**Navigation**	DR	**Navigation**	DR	**Navigation**	DR	**Navigation**	DR	**Navigation**	DR	**Navigation**	DR
Direction	N/A	**Direction**	Center	**Direction**	Center	**Direction**	Center	**Direction**	Center	**Direction**	Center	**Direction**	Center	**Direction**	Center
Size	N/A	**Size**	66	**Size**	-90	**Size**	417	**Size**	-90	**Size**	525	**Size**	90	**Size**	962
Loss Of Guidance	N/A	**Loss Of Guidance**	N/A	**Loss Of Guidance**	N/A	**Loss Of Guidance**	N/A	**Loss Of Guidance**	N/A	**Loss Of Guidance**	N/A	**Loss Of Guidance**	N/A	**Loss Of Guidance**	N/A
Obstacle Avoidance	N/A	**Obstacle Avoidance**	1	**Obstacle Avoidance**	1	**Obstacle Avoidance**	1	**Obstacle Avoidance**	1	**Obstacle Avoidance**	1	**Obstacle Avoidance**	1	**Obstacle Avoidance**	1
Output	N/A	**Output**	N/A	**Output**	N/A	**Output**	N/A	**Output**	N/A	**Output**	N/A	**Output**	N/A	**Output**	N/A
END OF STEP		**END OF STEP**		**END OF STEP**		**END OF STEP**		**END OF STEP**		**END OF STEP**		**END OF STEP**		**END OF STEP**	
END MODE	N/A	**END MODE**	Distance	**END MODE**	Distance	**END MODE**	Distance	**END MODE**	Distance	**END MODE**	Distance	**END MODE**	Distance	**END MODE**	Distance
END ACTION	e Bit #11, #1	**END ACTION**	Merge	**END ACTION**	Merge	**END ACTION**	Merge	**END ACTION**	Merge	**END ACTION**	Merge	**END ACTION**	Merge	**END ACTION**	Merge
NEXT ROUTE	9	**NEXT ROUTE**	9	**NEXT ROUTE**	9	**NEXT ROUTE**	9	**NEXT ROUTE**	9	**NEXT ROUTE**	9	**NEXT ROUTE**	9	**NEXT ROUTE**	9
NEXT STEP	**2**	**NEXT STEP**	**3**	**NEXT STEP**	**4**	**NEXT STEP**	**5**	**NEXT STEP**	**6**	**NEXT STEP**	**7**	**NEXT STEP**	**8**	**NEXT STEP**	**9**

Route 9:9		Route 9:10		Route 9:11		Route 9:12		Route 9:13		Route 9:14		Route 9:15		Route 9:16	
STEP INITIATION		**STEP INITIATION**		**STEP INITIATION**		**STEP INITIATION**		**STEP INITIATION**		**STEP INITIATION**		**STEP INITIATION**		**STEP INITIATION**	
Go Mode	Auto	**Go Mode**	Auto	**Go Mode**	Auto	**Go Mode**	Auto	**Go Mode**	Auto	**Go Mode**	Auto	**Go Mode**	Auto	**Go Mode**	Auto
Radio Input	dio Input 1-	**Radio Input**	dio Input 1-	**Radio Input**	dio Input 1-	**Radio Input**	dio Input 1-	**Radio Input**	dio Input 1-	**Radio Input**	dio Input 1-	**Radio Input**	dio Input 1-	**Radio Input**	dio Input 1-
Hard Wire Input	N/A	**Hard Wire Input**	N/A	**Hard Wire Input**	N/A	**Hard Wire Input**	N/A	**Hard Wire Input**	N/A	**Hard Wire Input**	N/A	**Hard Wire Input**	N/A	**Hard Wire Input**	N/A
BIT	N/A	**BIT**	N/A	**BIT**	N/A	**BIT**	N/A	**BIT**	N/A	**BIT**	N/A	**BIT**	N/A	**BIT**	N/A
STEP ACTION		**STEP ACTION**		**STEP ACTION**		**STEP ACTION**		**STEP ACTION**		**STEP ACTION**		**STEP ACTION**		**STEP ACTION**	
Function	Rotate	**Function**	Forward	**Function**	Rotate	**Function**	Forward	**Function**	Rotate	**Function**	Forward	**Function**	Rotate	**Function**	Reverse
Speed	33	**Speed**	33	**Speed**	33	**Speed**	33	**Speed**	33	**Speed**	33	**Speed**	33	**Speed**	33
Navigation	DR	**Navigation**	DR	**Navigation**	DR	**Navigation**	DR	**Navigation**	DR	**Navigation**	DR	**Navigation**	DR	**Navigation**	DR
Direction	Center	**Direction**	Center	**Direction**	Center	**Direction**	Center	**Direction**	Center	**Direction**	Center	**Direction**	Center	**Direction**	Center
Size	-90	**Size**	2284	**Size**	90	**Size**	331	**Size**	90	**Size**	144	**Size**	90	**Size**	62
Loss Of Guidance	N/A	**Loss Of Guidance**	N/A	**Loss Of Guidance**	N/A	**Loss Of Guidance**	N/A	**Loss Of Guidance**	N/A	**Loss Of Guidance**	N/A	**Loss Of Guidance**	N/A	**Loss Of Guidance**	N/A
Obstacle Avoidance	1	**Obstacle Avoidance**	1	**Obstacle Avoidance**	1	**Obstacle Avoidance**	1	**Obstacle Avoidance**	1	**Obstacle Avoidance**	1	**Obstacle Avoidance**	1	**Obstacle Avoidance**	1
Output	N/A	**Output**	N/A	**Output**	N/A	**Output**	N/A	**Output**	N/A	**Output**	N/A	**Output**	N/A	**Output**	#6 Pin Up
END OF STEP		**END OF STEP**		**END OF STEP**		**END OF STEP**		**END OF STEP**		**END OF STEP**		**END OF STEP**		**END OF STEP**	
END MODE	Distance	**END MODE**	Distance	**END MODE**	Distance	**END MODE**	Distance	**END MODE**	Distance	**END MODE**	Distance	**END MODE**	Distance	**END MODE**	Distance
END ACTION	Merge	**END ACTION**	Merge	**END ACTION**	Merge	**END ACTION**	Merge	**END ACTION**	Merge	**END ACTION**	Merge	**END ACTION**	Merge	**END ACTION**	Merge
NEXT ROUTE	9	**NEXT ROUTE**	9	**NEXT ROUTE**	9	**NEXT ROUTE**	9	**NEXT ROUTE**	9	**NEXT ROUTE**	9	**NEXT ROUTE**	9	**NEXT ROUTE**	9
NEXT STEP	**10**	**NEXT STEP**	**11**	**NEXT STEP**	**12**	**NEXT STEP**	**13**	**NEXT STEP**	**14**	**NEXT STEP**	**15**	**NEXT STEP**	**16**	**NEXT STEP**	**17**

Route 9:17		Route 9:18		Route 9:19		Route 9:20		Route 9:21		Route 9:22		Route 9:23		Route 9:24	
STEP INITIATION		**STEP INITIATION**		**STEP INITIATION**		**STEP INITIATION**		**STEP INITIATION**		**STEP INITIATION**		**STEP INITIATION**		**STEP INITIATION**	
Go Mode	Auto	**Go Mode**	Auto	**Go Mode**	Auto	**Go Mode**	Auto	**Go Mode**	Auto	**Go Mode**	Auto	**Go Mode**	Auto	**Go Mode**	Auto
Radio Input	dio Input 1-	**Radio Input**	dio Input 1-	**Radio Input**	dio Input 1-	**Radio Input**	dio Input 1-	**Radio Input**	dio Input 1-	**Radio Input**	dio Input 1-	**Radio Input**	dio Input 1-	**Radio Input**	dio Input 1-
Hard Wire Input	N/A	**Hard Wire Input**	N/A	**Hard Wire Input**	N/A	**Hard Wire Input**	N/A	**Hard Wire Input**	N/A	**Hard Wire Input**	N/A	**Hard Wire Input**	N/A	**Hard Wire Input**	N/A
BIT	N/A	**BIT**	N/A	**BIT**	N/A	**BIT**	N/A	**BIT**	N/A	**BIT**	N/A	**BIT**	N/A	**BIT**	N/A
STEP ACTION		**STEP ACTION**		**STEP ACTION**		**STEP ACTION**		**STEP ACTION**		**EP ACTION**		**STEP ACTION**		**STEP ACTION**	
Function	Forward	**Function**	Rotate	**Function**	Forward	**Function**	Rotate	**Function**	Forward	**Function**	Rotate	**Function**	Forward	**Function**	Rotate
Speed	33	**Speed**	33	**Speed**	33	**Speed**	33	**Speed**	33	**Speed**	33	**Speed**	33	**Speed**	33
Navigation	DR	**Navigation**	DR	**Navigation**	DR	**Navigation**	DR	**Navigation**	DR	**Navigation**	DR	**Navigation**	DR	**Navigation**	DR
Direction	Center	**Direction**	Center	**Direction**	Center	**Direction**	Center	**Direction**	Center	**Direction**	Center	**Direction**	Center	**Direction**	Center
Size	62	**Size**	90	**Size**	144	**Size**	-90	**Size**	331	**Size**	-90	**Size**	2284	**Size**	90
Loss Of Guidance	N/A	**Loss Of Guidance**	N/A	**Loss Of Guidance**	N/A	**Loss Of Guidance**	N/A	**Loss Of Guidance**	N/A	**Loss Of Guidance**	N/A	**Loss Of Guidance**	N/A	**Loss Of Guidance**	N/A
Obstacle Avoidance	1	**Obstacle Avoidance**	1	**Obstacle Avoidance**	1	**Obstacle Avoidance**	1	**Obstacle Avoidance**	1	**Obstacle Avoidance**	1	**Obstacle Avoidance**	1	**Obstacle Avoidance**	1
Output	N/A	**Output**	N/A	**Output**	N/A	**Output**	N/A	**Output**	N/A	**Output**	N/A	**Output**	N/A	**Output**	N/A
END OF STEP		**END OF STEP**		**END OF STEP**		**END OF STEP**		**END OF STEP**		**ID OF STEP**		**END OF STEP**		**END OF STEP**	
END MODE	Distance	**END MODE**	Distance	**END MODE**	Distance	**END MODE**	Distance	**END MODE**	Distance	**END MODE**	Distance	**END MODE**	Distance	**END MODE**	Distance
END ACTION	Merge	**END ACTION**	Merge	**END ACTION**	Merge	**END ACTION**	Merge	**END ACTION**	Merge	**END ACTION**	Merge	**END ACTION**	Merge	**END ACTION**	Merge
NEXT ROUTE	9	**NEXT ROUTE**	9	**NEXT ROUTE**	9	**NEXT ROUTE**	9	**NEXT ROUTE**	9	**NEXT ROUTE**	9	**NEXT ROUTE**	9	**NEXT ROUTE**	9
NEXT STEP	**18**	**NEXT STEP**	**19**	**NEXT STEP**	**20**	**NEXT STEP**	**21**	**NEXT STEP**	**22**	**NEXT STEP**	**23**	**NEXT STEP**	**24**	**NEXT STEP**	**25**

Route 9:25		Route 9:26		Route 9:27		Route 9:28		Route 9:29		Route 9:30		Route 9:31		Route 9:32	
STEP INITIATION		**STEP INITIATION**		**STEP INITIATION**		**STEP INITIATION**		**STEP INITIATION**		**STEP INITIATION**		**STEP INITIATION**		**STEP INITIATION**	
Go Mode	Auto	**Go Mode**	Auto	**Go Mode**	Auto	**Go Mode**	Auto	**Go Mode**	Auto	**Go Mode**	Auto	**Go Mode**	Auto	**Go Mode**	Auto
Radio Input	dio Input 1-	**Radio Input**	dio Input 1-	**Radio Input**	dio Input 1-	**Radio Input**	dio Input 1-	**Radio Input**	dio Input 1-	**Radio Input**	dio Input 1-	**Radio Input**	dio Input 1-	**Radio Input**	dio Input 1-
Hard Wire Input	N/A	**Hard Wire Input**	N/A	**Hard Wire Input**	N/A	**Hard Wire Input**	N/A	**Hard Wire Input**	N/A	**Hard Wire Input**	N/A	**Hard Wire Input**	N/A	**Hard Wire Input**	Cart prese
BIT	N/A	**BIT**	N/A	**BIT**	N/A	**BIT**	N/A	**BIT**	N/A	**BIT**	N/A	**BIT**	N/A	**BIT**	N/A
STEP ACTION		**STEP ACTION**		**STEP ACTION**		**STEP ACTION**		**STEP ACTION**		**STEP ACTION**		**STEP ACTION**		**STEP ACTION**	
Function	Forward	**Function**	Rotate	**Function**	Reverse	**Function**	Delay	**Function**	Forward	**Function**	Rotate	**Function**	Reverse	**Function**	Forward
Speed	33	**Speed**	33	**Speed**	33	**Speed**	33	**Speed**	33	**Speed**	33	**Speed**	33	**Speed**	33
Navigation	DR	**Navigation**	DR	**Navigation**	DR	**Navigation**	DR	**Navigation**	DR	**Navigation**	DR	**Navigation**	DR	**Navigation**	DR
Direction	Center	**Direction**	Center	**Direction**	Center	**Direction**	Center	**Direction**	Center	**Direction**	Center	**Direction**	Center	**Direction**	Center
Size	1240	**Size**	90	**Size**	279	**Size**	5	**Size**	104	**Size**	-90	**Size**	102	**Size**	102
Loss Of Guidance	N/A	**Loss Of Guidance**	N/A	**Loss Of Guidance**	N/A	**Loss Of Guidance**	N/A	**Loss Of Guidance**	N/A	**Loss Of Guidance**	N/A	**Loss Of Guidance**	N/A	**Loss Of Guidance**	N/A
Obstacle Avoidance	1	**Obstacle Avoidance**	1	**Obstacle Avoidance**	1	**Obstacle Avoidance**	1	**Obstacle Avoidance**	1	**Obstacle Avoidance**	1	**Obstacle Avoidance**	1	**Obstacle Avoidance**	1
Output	N/A	**Output**	N/A	**Output**	N/A	**Output**	#7 Pin Drop	**Output**		**Output**		**Output**	#6 pin up	**Output**	N/a
END OF STEP		**END OF STEP**		**END OF STEP**		**END OF STEP**		**END OF STEP**		**END OF STEP**		**END OF STEP**		**END OF STEP**	
END MODE	Distance	**END MODE**	Distance	**END MODE**	Distance	**END MODE**	time	**END MODE**	Distance	**END MODE**	Distance	**END MODE**	Distance	**END MODE**	Distance
END ACTION	Merge	**END ACTION**	Merge	**END ACTION**	Merge	**END ACTION**	Merge	**END ACTION**	Merge	**END ACTION**	Merge	**END ACTION**	Merge	**END ACTION**	Merge
NEXT ROUTE	9	**NEXT ROUTE**	9	**NEXT ROUTE**	9	**NEXT ROUTE**	9	**NEXT ROUTE**	9	**NEXT ROUTE**	9	**NEXT ROUTE**	9	**NEXT ROUTE**	9
NEXT STEP	**26**	**NEXT STEP**	**27**	**NEXT STEP**	**28**	**NEXT STEP**	**29**	**NEXT STEP**	**30**	**NEXT STEP**	**31**	**NEXT STEP**	**32**	**NEXT STEP**	**33**

Route 9:33		Route 9:34		Route 9:35		Route 9:36		Route 9:37		Route 9:38		Route 9:39		Route 9:40	
STEP INITIATION		STEP INITIATION		STEP INITIATION		STEP INITIATION		STEP INITIATION		STEP INITIATION		STEP INITIATION		STEP INITIATION	
Go Mode	Auto	Go Mode	Auto	Go Mode	Auto	Go Mode	Auto	Go Mode	Auto	Go Mode	Auto	Go Mode	Auto	Go Mode	Auto
Radio Input	dio Input 1	Radio Input	dio Input 1	Radio Input	dio Input 1	Radio Input	dio Input 1	Radio Input	dio Input 1	Radio Input	dio Input 1	Radio Input	dio Input 1	Radio Input	dio Input 1
Hard Wire Input	N/A	Hard Wire Input	N/A	Hard Wire Input	N/A	Hard Wire Input	N/A	Hard Wire Input	N/A	Hard Wire Input	N/A	Hard Wire Input	N/A	Hard Wire Input	N/A
BIT	N/A	BIT	N/A	BIT	N/A	BIT	N/A	BIT	N/A	BIT	N/A	BIT	N/A	BIT	N/A
STEP ACTION		STEP ACTION		STEP ACTION		STEP ACTION		STEP ACTION		STEP ACTION		STEP ACTION		STEP ACTION	
Function	Rotate	Function	Reverse	Function	Delay	Function	Forward	Function	Rotate	Function	Reverse	Function	Forward	Function	Rotate
Speed	33	Speed	33	Speed	33	Speed	33	Speed	33	Speed	33	Speed	33	Speed	33
Navigation	DR	Navigation	DR	Navigation	DR	Navigation	DR	Navigation	DR	Navigation	DR	Navigation	DR	Navigation	DR
Direction	Center	Direction	Center	Direction	Center	Direction	Center	Direction	Center	Direction	Center	Direction	Center	Direction	Center
Size	45	Size	99	Size	5	Size	99	Size	45	Size	104	Size	104	Size	-90
Loss Of Guidance	N/A	Loss Of Guidance	N/A	Loss Of Guidance	N/A	Loss Of Guidance	N/A	Loss Of Guidance	N/A	Loss Of Guidance	N/A	Loss Of Guidance	N/A	Loss Of Guidance	N/A
Obstacle Avoidance	1	Obstacle Avoidance	1	Obstacle Avoidance	1	Obstacle Avoidance	1	Obstacle Avoidance	1	Obstacle Avoidance	1	Obstacle Avoidance	1	Obstacle Avoidance	1
Output	N/a	Output	N/a	Output	#7 pin drop	Output	N/a	Output	N/a	Output	#7 pin raise	Output	N/A	Output	N/A
END OF STEP		END OF STEP		END OF STEP		END OF STEP		END OF STEP		END OF STEP		END OF STEP		END OF STEP	
END MODE	Distance	END MODE	Distance	END MODE	time	END MODE	Distance	END MODE	Distance	END MODE	Distance	END MODE	Distance	END MODE	Distance
END ACTION	Merge	END ACTION	Merge	END ACTION	Merge	END ACTION	Merge	END ACTION	Merge	END ACTION	Merge	END ACTION	Merge	END ACTION	Merge
NEXT ROUTE	9	NEXT ROUTE	9	NEXT ROUTE	9	NEXT ROUTE	9	NEXT ROUTE	9	NEXT ROUTE	9	NEXT ROUTE	9	NEXT ROUTE	9
NEXT STEP	34	NEXT STEP	35	NEXT STEP	36	NEXT STEP	37	NEXT STEP	38	NEXT STEP	39	NEXT STEP	40	NEXT STEP	41

Route 9:41		Route 9:42		Route 9:43		Route 9:44		Route 9:45		Route 9:46		Route 9:47		Route 9:48	
STEP INITIATION		STEP INITIATION		STEP INITIATION		STEP INITIATION		STEP INITIATION		STEP INITIATION		STEP INITIATION		STEP INITIATION	
Go Mode	Auto	Go Mode	Auto	Go Mode	Auto	Go Mode	Auto	Go Mode	Auto	Go Mode	Auto	Go Mode	Auto	Go Mode	Auto
Radio Input	dio Input 1	Radio Input	dio Input 1	Radio Input	dio Input 1	Radio Input	dio Input 1	Radio Input	dio Input 1	Radio Input	dio Input 1	Radio Input	dio Input 1	Radio Input	dio Input 1
Hard Wire Input	N/A	Hard Wire Input	N/A	Hard Wire Input	N/A	Hard Wire Input	N/A	Hard Wire Input	N/A	Hard Wire Input	Cart Prese	Hard Wire Input		Hard Wire Input	
BIT	N/A	BIT	N/A	BIT	N/A	BIT	N/A	BIT	N/A	BIT	N/A	BIT	N/A	BIT	N/A
STEP ACTION		STEP ACTION		STEP ACTION		STEP ACTION		STEP ACTION		STEP ACTION		STEP ACTION		STEP ACTION	
Function	Reverse	Function	Delay	Function	Forward	Function	Rotate	Function	Reverse	Function	Forward	Function	Rotate	Function	Forward
Speed	33	Speed	33	Speed	33	Speed	33	Speed	33	Speed	33	Speed	33	Speed	33
Navigation	DR	Navigation	DR	Navigation	DR	Navigation	DR	Navigation	DR	Navigation	DR	Navigation	DR	Navigation	DR
Direction	Center	Direction	Center	Direction	Center	Direction	Center	Direction	Center	Direction	Center	Direction	Center	Direction	Center
Size	102	Size	5	Size	102	Size	45	Size	99	Size	99	Size	45	Size	174
Loss Of Guidance	N/A	Loss Of Guidance	N/A	Loss Of Guidance	N/A	Loss Of Guidance	N/A	Loss Of Guidance	N/A	Loss Of Guidance	N/A	Loss Of Guidance	N/A	Loss Of Guidance	N/A
Obstacle Avoidance	1	Obstacle Avoidance	1	Obstacle Avoidance	1	Obstacle Avoidance	1	Obstacle Avoidance	1	Obstacle Avoidance	1	Obstacle Avoidance	1	Obstacle Avoidance	1
Output	N/A	Output	#7 Pin Drop	Output	N/a	Output	N/a	Output	#6 Pin Raise	Output	N/a	Output	N/a	Output	N/a
END OF STEP		END OF STEP		END OF STEP		END OF STEP		END OF STEP		END OF STEP		END OF STEP		END OF STEP	
END MODE	Distance	END MODE	Time	END MODE	Distance	END MODE	Distance	END MODE	Distance	END MODE	Distance	END MODE	Distance	END MODE	Distance
END ACTION	Merge	END ACTION	Merge	END ACTION	Merge	END ACTION	Merge	END ACTION	Merge	END ACTION	Merge	END ACTION	Merge	END ACTION	Merge
NEXT ROUTE	9	NEXT ROUTE	9	NEXT ROUTE	9	NEXT ROUTE	9	NEXT ROUTE	9	NEXT ROUTE	9	NEXT ROUTE	9	NEXT ROUTE	9
NEXT STEP	42	NEXT STEP	43	NEXT STEP	44	NEXT STEP	45	NEXT STEP	46	NEXT STEP	47	NEXT STEP	48	NEXT STEP	49

Route 9:49		Route 9:50		Route 9:51		Route 9:52		Route 9:53		Route 9:54		Route 9:55		Route 9:56	
STEP INITIATION		STEP INITIATION		STEP INITIATION		STEP INITIATION		STEP INITIATION		STEP INITIATION		STEP INITIATION		STEP INITIATION	
Go Mode	Auto	Go Mode	Auto	Go Mode	Auto	Go Mode	Auto	Go Mode	Auto	Go Mode	Auto	Go Mode	Auto	Go Mode	Auto
Radio Input	dio Input 1	Radio Input	dio Input 1	Radio Input	dio Input 1	Radio Input	dio Input 1	Radio Input	dio Input 1	Radio Input	dio Input 1	Radio Input	dio Input 1	Radio Input	dio Input 1
Hard Wire Input		Hard Wire Input		Hard Wire Input		Hard Wire Input		Hard Wire Input		Hard Wire Input		Hard Wire Input		Hard Wire Input	
BIT	N/A	BIT	N/A	BIT	N/A	BIT	N/A	BIT	N/A	BIT	N/A	BIT	N/A	BIT	N/A
STEP ACTION		STEP ACTION		STEP ACTION		STEP ACTION		STEP ACTION		STEP ACTION		STEP ACTION		STEP ACTION	
Function	Rotate	Function	Forward	Function	Rotate	Function	Forward	Function	Rotate	Function	Forward	Function	Rotate	Function	Forward
Speed	33	Speed	33	Speed	33	Speed	33	Speed	33	Speed	33	Speed	33	Speed	33
Navigation	DR	Navigation	DR	Navigation	DR	Navigation	DR	Navigation	DR	Navigation	DR	Navigation	DR	Navigation	DR
Direction	Center	Direction	Center	Direction	Center	Direction	Center	Direction	Center	Direction	Center	Direction	Center	Direction	Center
Size	90	Size	1240	Size	-90	Size	2284	Size	90	Size	331	Size	90	Size	144
Loss Of Guidance	N/A	Loss Of Guidance	N/A	Loss Of Guidance	N/A	Loss Of Guidance	N/A	Loss Of Guidance	N/A	Loss Of Guidance	N/A	Loss Of Guidance	N/A	Loss Of Guidance	N/A
Obstacle Avoidance	1	Obstacle Avoidance	1	Obstacle Avoidance	1	Obstacle Avoidance	1	Obstacle Avoidance	1	Obstacle Avoidance	1	Obstacle Avoidance	1	Obstacle Avoidance	1
Output	N/a	Output	N/a	Output	N/a	Output	N/a	Output	N/a	Output	N/a	Output	N/a	Output	N/a
END OF STEP		END OF STEP		END OF STEP		END OF STEP		END OF STEP		END OF STEP		END OF STEP		END OF STEP	
END MODE	Distance	END MODE	Distance	END MODE	Distance	END MODE	Distance	END MODE	Distance	END MODE	Distance	END MODE	Distance	END MODE	Distance
END ACTION	Merge	END ACTION	Merge	END ACTION	Merge	END ACTION	Merge	END ACTION	Merge	END ACTION	Merge	END ACTION	Merge	END ACTION	Merge
NEXT ROUTE	9	NEXT ROUTE	9	NEXT ROUTE	9	NEXT ROUTE	9	NEXT ROUTE	9	NEXT ROUTE	9	NEXT ROUTE	9	NEXT ROUTE	9
NEXT STEP	50	NEXT STEP	51	NEXT STEP	52	NEXT STEP	53	NEXT STEP	54	NEXT STEP	55	NEXT STEP	56	NEXT STEP	57

Route 9:57		Route 9:58		Route 9:59		Route 9:60		Route 9:61		Route 9:62		Route 9:63		Route 9:64	
STEP INITIATION		STEP INITIATION		STEP INITIATION		STEP INITIATION		STEP INITIATION		STEP INITIATION		STEP INITIATION		STEP INITIATION	
Go Mode	Auto	Go Mode	Auto	Go Mode	Auto	Go Mode	Auto	Go Mode	Auto	Go Mode	Auto	Go Mode	Auto	Go Mode	Auto
Radio Input	dio Input 1	Radio Input	dio Input 1	Radio Input	dio Input 1	Radio Input	dio Input 1	Radio Input	dio Input 1	Radio Input	dio Input 1	Radio Input	dio Input 1	Radio Input	dio Input 1
Hard Wire Input		Hard Wire Input		Hard Wire Input		Hard Wire Input		Hard Wire Input		Hard Wire Input		Hard Wire Input		Hard Wire Input	
BIT	N/A	BIT	N/A	BIT	N/A	BIT	N/A	BIT	N/A	BIT	N/A	BIT	N/A	BIT	N/A
STEP ACTION		STEP ACTION		STEP ACTION		STEP ACTION		STEP ACTION		STEP ACTION		STEP ACTION		STEP ACTION	
Function	Rotate	Function	Reverse	Function	Dellay	Function	Forward	Function	Rotate	Function	Forward	Function	Rotate	Function	Forward
Speed	33	Speed	33	Speed	33	Speed	33	Speed	33	Speed	33	Speed	33	Speed	33
Navigation	DR	Navigation	DR	Navigation	DR	Navigation	DR	Navigation	DR	Navigation	DR	Navigation	DR	Navigation	DR
Direction	Center	Direction	Center	Direction	Center	Direction	Center	Direction	Center	Direction	Center	Direction	Center	Direction	Center
Size	90	Size	62	Size	5	Size	62	Size	90	Size	144	Size	-90	Size	331
Loss Of Guidance	N/A	Loss Of Guidance	N/A	Loss Of Guidance	N/A	Loss Of Guidance	N/A	Loss Of Guidance	N/A	Loss Of Guidance	N/A	Loss Of Guidance	N/A	Loss Of Guidance	N/A
Obstacle Avoidance	1	Obstacle Avoidance	1	Obstacle Avoidance	1	Obstacle Avoidance	1	Obstacle Avoidance	1	Obstacle Avoidance	1	Obstacle Avoidance	1	Obstacle Avoidance	1
Output	N/a	Output	N/a	Output	#7 Pin Drop	Output		Output		Output		Output		Output	
END OF STEP		END OF STEP		END OF STEP		END OF STEP		END OF STEP		END OF STEP		END OF STEP		END OF STEP	
END MODE	Distance	END MODE	Distance	END MODE	time	END MODE	Distance	END MODE	Distance	END MODE	Distance	END MODE	Distance	END MODE	Distance
END ACTION	Merge	END ACTION	Merge	END ACTION	Merge	END ACTION	Merge	END ACTION	Merge	END ACTION	Merge	END ACTION	Merge	END ACTION	Merge
NEXT ROUTE	9	NEXT ROUTE	9	NEXT ROUTE	9	NEXT ROUTE	9	NEXT ROUTE	9	NEXT ROUTE	9	NEXT ROUTE	9	NEXT ROUTE	9
NEXT STEP	58	NEXT STEP	59	NEXT STEP	60	NEXT STEP	61	NEXT STEP	62	NEXT STEP	63	NEXT STEP	64	NEXT STEP	65

Route 9:65		Route 9:66		Route 9:67		Route 9:68		Route 9:69		Route 9:70		Route 9:71		Route 9:72	
STEP INITIATION		**STEP INITIATION**		**STEP INITIATION**		**STEP INITIATION**		**STEP INITIATION**		**STEP INITIATION**		**STEP INITIATION**		**STEP INITIATION**	
Go Mode	Auto	**Go Mode**	Auto	**Go Mode**	Auto	**Go Mode**	Auto	**Go Mode**	Auto	**Go Mode**	Auto	**Go Mode**	Auto	**Go Mode**	Auto
Radio Input	dio Input 1-	**Radio Input**	dio Input 1-	**Radio Input**	dio Input 1-	**Radio Input**	dio Input 1-	**Radio Input**	dio Input 1-	**Radio Input**	dio Input 1-	**Radio Input**	dio Input 1-	**Radio Input**	dio Input 1-
Hard Wire Input		**Hard Wire Input**		**Hard Wire Input**	N/a	**Hard Wire Input**	N/a	**Hard Wire Input**	N/a	**Hard Wire Input**	N/a	**Hard Wire Input**	N/a	**Hard Wire Input**	N/a
BIT	N/A	**BIT**	N/A	**BIT**	N/A	**BIT**	N/A	**BIT**	N/A	**BIT**	N/A	**BIT**	N/A	**BIT**	N/A
STEP ACTION		**STEP ACTION**		**STEP ACTION**		**STEP ACTION**		**STEP ACTION**		**STEP ACTION**		**STEP ACTION**		**STEP ACTION**	
Function	Rotate	**Function**	Forward	**Function**	Rotate	**Function**	Forward	**Function**	Rotate	**Function**	Forward	**Function**	Rotate	**Function**	Forward
Speed	33	**Speed**	33	**Speed**	33	**Speed**	33	**Speed**	33	**Speed**	33	**Speed**	33	**Speed**	33
Navigation	DR	**Navigation**	DR	**Navigation**	DR	**Navigation**	DR	**Navigation**	DR	**Navigation**	DR	**Navigation**	DR	**Navigation**	DR
Direction	Center	**Direction**	Center	**Direction**	Center	**Direction**	Center	**Direction**	Center	**Direction**	Center	**Direction**	Center	**Direction**	Center
Size	-90	**Size**	2284	**Size**	90	**Size**	962	**Size**	-90	**Size**	525	**Size**	90	**Size**	417
Loss Of Guidance	N/A	**Loss Of Guidance**	N/A	**Loss Of Guidance**	N/A	**Loss Of Guidance**	N/A	**Loss Of Guidance**	N/A	**Loss Of Guidance**	N/A	**Loss Of Guidance**	N/A	**Loss Of Guidance**	N/A
Obstacle Avoidance	1	**Obstacle Avoidance**	1	**Obstacle Avoidance**	1	**Obstacle Avoidance**	1	**Obstacle Avoidance**	1	**Obstacle Avoidance**	1	**Obstacle Avoidance**	1	**Obstacle Avoidance**	1
Output		**Output**		**Output**	N/a	**Output**	N/a	**Output**	N/a	**Output**	N/a	**Output**	N/a	**Output**	N/a
END OF STEP		**END OF STEP**		**END OF STEP**		**END OF STEP**		**END OF STEP**		**END OF STEP**		**END OF STEP**		**END OF STEP**	
END MODE	Distance	**END MODE**	Distance	**END MODE**	Distance	**END MODE**	Distance	**END MODE**	Distance	**END MODE**	Distance	**END MODE**	Distance	**END MODE**	Distance
END ACTION	Merge	**END ACTION**	Merge	**END ACTION**	Merge	**END ACTION**	Merge	**END ACTION**	Merge	**END ACTION**	Merge	**END ACTION**	Merge	**END ACTION**	Merge
NEXT ROUTE	9	**NEXT ROUTE**	9	**NEXT ROUTE**	9	**NEXT ROUTE**	9	**NEXT ROUTE**	9	**NEXT ROUTE**	9	**NEXT ROUTE**	9	**NEXT ROUTE**	9
NEXT STEP	**66**	**NEXT STEP**	**67**	**NEXT STEP**	**68**	**NEXT STEP**	**69**	**NEXT STEP**	**70**	**NEXT STEP**	**71**	**NEXT STEP**	**72**	**NEXT STEP**	**73**

Route 9:73		Route 9:74		Route 0: 1	
STEP INITIATION		**STEP INITIATION**		**STEP INITIATION**	
Go Mode	Auto	**Go Mode**	Auto	**Go Mode**	nput Trigge
Radio Input	dio Input 1-	**Radio Input**	dio Input 1-	**Radio Input**	dio Input 1-
Hard Wire Input	N/a	**Hard Wire Input**	N/a	**Hard Wire Input**	N/a
BIT	N/A	**BIT**	N/A	**BIT**	BIT #1-#24
STEP ACTION		**STEP ACTION**		**STEP ACTION**	
Function	Rotate	**Function**	Reverse	**Function**	Auto
Speed	33	**Speed**	33	**Speed**	33
Navigation	DR	**Navigation**	DR	**Navigation**	DR
Direction	Center	**Direction**	Center	**Direction**	Center
Size	-90	**Size**	66	**Size**	66
Loss Of Guidance	N/A	**Loss Of Guidance**	N/A	**Loss Of Guidance**	N/A
Obstacle Avoidance	1	**Obstacle Avoidance**	1	**Obstacle Avoidance**	1
Output	N/a	**Output**	N/a	**Output**	N/a
END OF STEP		**END OF STEP**		**END OF STEP**	
END MODE	Distance	**END MODE**	Distance	**END MODE**	Distance
END ACTION	Merge	**END ACTION**	Merge	**END ACTION**	Merge
NEXT ROUTE	9	**NEXT ROUTE**	0	**NEXT ROUTE**	0
NEXT STEP	**74**	**NEXT STEP**	1	**NEXT STEP**	1

Tier 3 Route 10

Route 10:1		Route 10:2		Route 10:3		Route 10:4		Route 10:5		Route 10:6		Route 10:7		Route 10:8	
STEP INITIATION		**STEP INITIATION**		**STEP INITIATION**		**STEP INITIATION**		**STEP INITIATION**		**STEP INITIATION**		**STEP INITIATION**		**STEP INITIATION**	
Go Mode	nput Triggers	**Go Mode**	Auto	**Go Mode**	Auto	**Go Mode**	Auto	**Go Mode**	Auto	**Go Mode**	Auto	**Go Mode**	Auto	**Go Mode**	Auto
Radio Input	adio Input 1-2	**Radio Input**	dio Input 1-	**Radio Input**	dio Input 1-	**Radio Input**	dio Input 1-	**Radio Input**	dio Input 1-	**Radio Input**	dio Input 1-	**Radio Input**	dio Input 1-	**Radio Input**	dio Input 1-
Hard Wire Input	N/A	**Hard Wire Input**	N/A	**Hard Wire Input**	N/A	**Hard Wire Input**	N/A	**Hard Wire Input**	N/A	**Hard Wire Input**	N/A	**Hard Wire Input**	N/A	**Hard Wire Input**	N/A
BIT	Bit #1 off	**BIT**	N/A	**BIT**	N/A	**BIT**	N/A	**BIT**	N/A	**BIT**	N/A	**BIT**	N/A	**BIT**	N/A
Bit#11 On, #17 On	it #5 and 6 Off														
Home Position RFID	it #7 and 9 of														
	t #8 and 10 o														
STEP ACTION		**STEP ACTION**		**STEP ACTION**		**STEP ACTION**		**STEP ACTION**		**STEP ACTION**		**STEP ACTION**		**STEP ACTION**	
Function	Dispatch	**Function**	Forward	**Function**	Rotate	**Function**	Forward	**Function**	Rotate	**Function**	Forward	**Function**	Rotate	**Function**	Forward
Speed	N/A	**Speed**	33	**Speed**	33	**Speed**	33	**Speed**	33	**Speed**	33	**Speed**	33	**Speed**	33
Navigation	N/A	**Navigation**	DR	**Navigation**	DR	**Navigation**	DR	**Navigation**	DR	**Navigation**	DR	**Navigation**	DR	**Navigation**	DR
Direction	N/A	**Direction**	Center	**Direction**	Center	**Direction**	Center	**Direction**	Center	**Direction**	Center	**Direction**	Center	**Direction**	Center
Size	N/A	**Size**	66	**Size**	-90	**Size**	417	**Size**	-90	**Size**	525	**Size**	90	**Size**	962
Loss Of Guidance	N/A	**Loss Of Guidance**	N/A	**Loss Of Guidance**	N/A	**Loss Of Guidance**	N/A	**Loss Of Guidance**	N/A	**Loss Of Guidance**	N/A	**Loss Of Guidance**	N/A	**Loss Of Guidance**	N/A
Obstacle Avoidance	N/A	**Obstacle Avoidance**	1	**Obstacle Avoidance**	1	**Obstacle Avoidance**	1	**Obstacle Avoidance**	1	**Obstacle Avoidance**	1	**Obstacle Avoidance**	1	**Obstacle Avoidance**	1
Output	N/A	**Output**	N/A	**Output**	N/A	**Output**	N/A	**Output**	N/A	**Output**	N/A	**Output**	N/A	**Output**	N/A
END OF STEP		**END OF STEP**		**END OF STEP**		**END OF STEP**		**END OF STEP**		**END OF STEP**		**END OF STEP**		**END OF STEP**	
END MODE	N/A	**END MODE**	Distance	**END MODE**	Distance	**END MODE**	Distance	**END MODE**	Distance	**END MODE**	Distance	**END MODE**	Distance	**END MODE**	Distance
END ACTION	e Bit #11, #1	**END ACTION**	Merge	**END ACTION**	Merge	**END ACTION**	Merge	**END ACTION**	Merge	**END ACTION**	Merge	**END ACTION**	Merge	**END ACTION**	Merge
NEXT ROUTE	10	**NEXT ROUTE**	10	**NEXT ROUTE**	10	**NEXT ROUTE**	10	**NEXT ROUTE**	10	**NEXT ROUTE**	10	**NEXT ROUTE**	10	**NEXT ROUTE**	10
NEXT STEP	**2**	**NEXT STEP**	**3**	**NEXT STEP**	**4**	**NEXT STEP**	**5**	**NEXT STEP**	**6**	**NEXT STEP**	**7**	**NEXT STEP**	**8**	**NEXT STEP**	**9**

Route 10:9		Route 10:10		Route 10:11		Route 10:12		Route 10:13		Route 10:14		Route 10:15		Route 10:16	
STEP INITIATION		**STEP INITIATION**		**STEP INITIATION**		**STEP INITIATION**		**STEP INITIATION**		**STEP INITIATION**		**STEP INITIATION**		**STEP INITIATION**	
Go Mode	Auto	**Go Mode**	Auto	**Go Mode**	Auto	**Go Mode**	Auto	**Go Mode**	Auto	**Go Mode**	Auto	**Go Mode**	Auto	**Go Mode**	Auto
Radio Input	dio Input 1-	**Radio Input**	dio Input 1-	**Radio Input**	dio Input 1-	**Radio Input**	dio Input 1-	**Radio Input**	dio Input 1-	**Radio Input**	dio Input 1-	**Radio Input**	dio Input 1-	**Radio Input**	dio Input 1-
Hard Wire Input	N/A	**Hard Wire Input**	N/A	**Hard Wire Input**	N/A	**Hard Wire Input**	N/A	**Hard Wire Input**	N/A	**Hard Wire Input**	N/A	**Hard Wire Input**	N/A	**Hard Wire Input**	N/A
BIT	N/A	**BIT**	N/A	**BIT**	N/A	**BIT**	N/A	**BIT**	N/A	**BIT**	N/A	**BIT**	N/A	**BIT**	N/A
STEP ACTION		**STEP ACTION**		**STEP ACTION**		**STEP ACTION**		**STEP ACTION**		**STEP ACTION**		**STEP ACTION**		**STEP ACTION**	
Function	Rotate	**Function**	Forward	**Function**	Rotate	**Function**	Forward	**Function**	Rotate	**Function**	Forward	**Function**	Rotate	**Function**	Reverse
Speed	33	**Speed**	33	**Speed**	33	**Speed**	33	**Speed**	33	**Speed**	33	**Speed**	33	**Speed**	33
Navigation	DR	**Navigation**	DR	**Navigation**	DR	**Navigation**	DR	**Navigation**	DR	**Navigation**	DR	**Navigation**	DR	**Navigation**	DR
Direction	Center	**Direction**	Center	**Direction**	Center	**Direction**	Center	**Direction**	Center	**Direction**	Center	**Direction**	Center	**Direction**	Center
Size	-90	**Size**	2284	**Size**	90	**Size**	331	**Size**	90	**Size**	208	**Size**	90	**Size**	62
Loss Of Guidance	N/A	**Loss Of Guidance**	N/A	**Loss Of Guidance**	N/A	**Loss Of Guidance**	N/A	**Loss Of Guidance**	N/A	**Loss Of Guidance**	N/A	**Loss Of Guidance**	N/A	**Loss Of Guidance**	N/A
Obstacle Avoidance	1	**Obstacle Avoidance**	1	**Obstacle Avoidance**	1	**Obstacle Avoidance**	1	**Obstacle Avoidance**	1	**Obstacle Avoidance**	1	**Obstacle Avoidance**	1	**Obstacle Avoidance**	1
Output	N/A	**Output**	N/A	**Output**	N/A	**Output**	N/A	**Output**	N/A	**Output**	N/A	**Output**	N/A	**Output**	#6 Pin Up
END OF STEP		**END OF STEP**		**END OF STEP**		**END OF STEP**		**END OF STEP**		**END OF STEP**		**END OF STEP**		**END OF STEP**	
END MODE	Distance	**END MODE**	Distance	**END MODE**	Distance	**END MODE**	Distance	**END MODE**	Distance	**END MODE**	Distance	**END MODE**	Distance	**END MODE**	Distance
END ACTION	Merge	**END ACTION**	Merge	**END ACTION**	Merge	**END ACTION**	Merge	**END ACTION**	Merge	**END ACTION**	Merge	**END ACTION**	Merge	**END ACTION**	Merge
NEXT ROUTE	10	**NEXT ROUTE**	10	**NEXT ROUTE**	10	**NEXT ROUTE**	10	**NEXT ROUTE**	10	**NEXT ROUTE**	10	**NEXT ROUTE**	10	**NEXT ROUTE**	10
NEXT STEP	**10**	**NEXT STEP**	**11**	**NEXT STEP**	**12**	**NEXT STEP**	**13**	**NEXT STEP**	**14**	**NEXT STEP**	**15**	**NEXT STEP**	**16**	**NEXT STEP**	**17**

Route 10:17		Route 10:18		Route 10:19		Route 10:20		Route 10:21		Route 10:22		Route 10:23		Route 10:24	
STEP INITIATION		**STEP INITIATION**		**STEP INITIATION**		**STEP INITIATION**		**STEP INITIATION**		**STEP INITIATION**		**STEP INITIATION**		**STEP INITIATION**	
Go Mode	Auto	**Go Mode**	Auto	**Go Mode**	Auto	**Go Mode**	Auto	**Go Mode**	Auto	**Go Mode**	Auto	**Go Mode**	Auto	**Go Mode**	Auto
Radio Input	dio Input 1-	**Radio Input**	dio Input 1-	**Radio Input**	dio Input 1-	**Radio Input**	dio Input 1-	**Radio Input**	dio Input 1-	**Radio Input**	dio Input 1-	**Radio Input**	dio Input 1-	**Radio Input**	dio Input 1-
Hard Wire Input	N/A	**Hard Wire Input**	N/A	**Hard Wire Input**	N/A	**Hard Wire Input**	N/A	**Hard Wire Input**	N/A	**Hard Wire Input**	N/A	**Hard Wire Input**	N/A	**Hard Wire Input**	N/A
BIT	N/A	**BIT**	N/A	**BIT**	N/A	**BIT**	N/A	**BIT**	N/A	**BIT**	N/A	**BIT**	N/A	**BIT**	N/A
STEP ACTION		**STEP ACTION**		**STEP ACTION**		**STEP ACTION**		**STEP ACTION**		**EP ACTION**		**STEP ACTION**		**STEP ACTION**	
Function	Forward	**Function**	Rotate	**Function**	Forward	**Function**	Rotate	**Function**	Forward	**Function**	Rotate	**Function**	Forward	**Function**	Rotate
Speed	33	**Speed**	33	**Speed**	33	**Speed**	33	**Speed**	33	**Speed**	33	**Speed**	33	**Speed**	33
Navigation	DR	**Navigation**	DR	**Navigation**	DR	**Navigation**	DR	**Navigation**	DR	**Navigation**	DR	**Navigation**	DR	**Navigation**	DR
Direction	Center	**Direction**	Center	**Direction**	Center	**Direction**	Center	**Direction**	Center	**Direction**	Center	**Direction**	Center	**Direction**	Center
Size	62	**Size**	90	**Size**	208	**Size**	-90	**Size**	331	**Size**	-90	**Size**	2284	**Size**	90
Loss Of Guidance	N/A	**Loss Of Guidance**	N/A	**Loss Of Guidance**	N/A	**Loss Of Guidance**	N/A	**Loss Of Guidance**	N/A	**Loss Of Guidance**	N/A	**Loss Of Guidance**	N/A	**Loss Of Guidance**	N/A
Obstacle Avoidance	1	**Obstacle Avoidance**	1	**Obstacle Avoidance**	1	**Obstacle Avoidance**	1	**Obstacle Avoidance**	1	**Obstacle Avoidance**	1	**Obstacle Avoidance**	1	**Obstacle Avoidance**	1
Output	N/A	**Output**	N/A	**Output**	N/A	**Output**	N/A	**Output**	N/A	**Output**	N/A	**Output**	N/A	**Output**	N/A
END OF STEP		**END OF STEP**		**END OF STEP**		**END OF STEP**		**END OF STEP**		**ID OF STEP**		**END OF STEP**		**END OF STEP**	
END MODE	Distance	**END MODE**	Distance	**END MODE**	Distance	**END MODE**	Distance	**END MODE**	Distance	**END MODE**	Distance	**END MODE**	Distance	**END MODE**	Distance
END ACTION	Merge	**END ACTION**	Merge	**END ACTION**	Merge	**END ACTION**	Merge	**END ACTION**	Merge	**END ACTION**	Merge	**END ACTION**	Merge	**END ACTION**	Merge
NEXT ROUTE	10	**NEXT ROUTE**	10	**NEXT ROUTE**	10	**NEXT ROUTE**	10	**NEXT ROUTE**	10	**NEXT ROUTE**	10	**NEXT ROUTE**	10	**NEXT ROUTE**	10
NEXT STEP	**18**	**NEXT STEP**	**19**	**NEXT STEP**	**20**	**NEXT STEP**	**21**	**NEXT STEP**	**22**	**NEXT STEP**	**23**	**NEXT STEP**	**24**	**NEXT STEP**	**25**

Route 10:25		Route 10:26		Route 10:27		Route 10:28		Route 10:29		Route 10:30		Route 10:31		Route 10:32	
STEP INITIATION		**STEP INITIATION**		**STEP INITIATION**		**STEP INITIATION**		**STEP INITIATION**		**STEP INITIATION**		**STEP INITIATION**		**STEP INITIATION**	
Go Mode	Auto	**Go Mode**	Auto	**Go Mode**	Auto	**Go Mode**	Auto	**Go Mode**	Auto	**Go Mode**	Auto	**Go Mode**	Auto	**Go Mode**	Auto
Radio Input	dio Input 1-	**Radio Input**	dio Input 1-	**Radio Input**	dio Input 1-	**Radio Input**	dio Input 1-	**Radio Input**	dio Input 1-	**Radio Input**	dio Input 1-	**Radio Input**	dio Input 1-	**Radio Input**	dio Input 1-
Hard Wire Input	N/A	**Hard Wire Input**	N/A	**Hard Wire Input**	N/A	**Hard Wire Input**	N/A	**Hard Wire Input**	N/A	**Hard Wire Input**	N/A	**Hard Wire Input**	N/A	**Hard Wire Input**	Cart prese
BIT	N/A	**BIT**	N/A	**BIT**	N/A	**BIT**	N/A	**BIT**	N/A	**BIT**	N/A	**BIT**	N/A	**BIT**	N/A
STEP ACTION		**STEP ACTION**		**STEP ACTION**		**STEP ACTION**		**STEP ACTION**		**STEP ACTION**		**STEP ACTION**		**STEP ACTION**	
Function	Forward	**Function**	Rotate	**Function**	Reverse	**Function**	Delay	**Function**	Forward	**Function**	Rotate	**Function**	Reverse	**Function**	Forward
Speed	33	**Speed**	33	**Speed**	33	**Speed**	33	**Speed**	33	**Speed**	33	**Speed**	33	**Speed**	33
Navigation	DR	**Navigation**	DR	**Navigation**	DR	**Navigation**	DR	**Navigation**	DR	**Navigation**	DR	**Navigation**	DR	**Navigation**	DR
Direction	Center	**Direction**	Center	**Direction**	Center	**Direction**	Center	**Direction**	Center	**Direction**	Center	**Direction**	Center	**Direction**	Center
Size	1240	**Size**	90	**Size**	279	**Size**	5	**Size**	104	**Size**	-90	**Size**	102	**Size**	102
Loss Of Guidance	N/A	**Loss Of Guidance**	N/A	**Loss Of Guidance**	N/A	**Loss Of Guidance**	N/A	**Loss Of Guidance**	N/A	**Loss Of Guidance**	N/A	**Loss Of Guidance**	N/A	**Loss Of Guidance**	N/A
Obstacle Avoidance	1	**Obstacle Avoidance**	1	**Obstacle Avoidance**	1	**Obstacle Avoidance**	1	**Obstacle Avoidance**	1	**Obstacle Avoidance**	1	**Obstacle Avoidance**	1	**Obstacle Avoidance**	1
Output	N/A	**Output**	N/A	**Output**	N/A	**Output**	#7 Pin Drop	**Output**		**Output**		**Output**	#6 pin up	**Output**	N/a
END OF STEP		**END OF STEP**		**END OF STEP**		**END OF STEP**		**END OF STEP**		**END OF STEP**		**END OF STEP**		**END OF STEP**	
END MODE	Distance	**END MODE**	Distance	**END MODE**	Distance	**END MODE**	time	**END MODE**	Distance	**END MODE**	Distance	**END MODE**	Distance	**END MODE**	Distance
END ACTION	Merge	**END ACTION**	Merge	**END ACTION**	Merge	**END ACTION**	Merge	**END ACTION**	Merge	**END ACTION**	Merge	**END ACTION**	Merge	**END ACTION**	Merge
NEXT ROUTE	10	**NEXT ROUTE**	10	**NEXT ROUTE**	10	**NEXT ROUTE**	10	**NEXT ROUTE**	10	**NEXT ROUTE**	10	**NEXT ROUTE**	10	**NEXT ROUTE**	10
NEXT STEP	**26**	**NEXT STEP**	**27**	**NEXT STEP**	**28**	**NEXT STEP**	**29**	**NEXT STEP**	**30**	**NEXT STEP**	**31**	**NEXT STEP**	**32**	**NEXT STEP**	**33**

Route 10:33		Route 10:34		Route 10:35		Route 10:36		Route 10:37		Route 10:38		Route 10:39		Route 10:40	
STEP INITIATION		STEP INITIATION		STEP INITIATION		STEP INITIATION		STEP INITIATION		STEP INITIATION		STEP INITIATION		STEP INITIATION	
Go Mode	Auto	Go Mode	Auto	Go Mode	Auto	Go Mode	Auto	Go Mode	Auto	Go Mode	Auto	Go Mode	Auto	Go Mode	Auto
Radio Input	dio Input 1	Radio Input	dio Input 1	Radio Input	dio Input 1	Radio Input	dio Input 1	Radio Input	dio Input 1	Radio Input	dio Input 1	Radio Input	dio Input 1	Radio Input	dio Input 1
Hard Wire Input	N/A	Hard Wire Input	N/A	Hard Wire Input	N/A	Hard Wire Input	N/A	Hard Wire Input	N/A	Hard Wire Input	N/A	Hard Wire Input	N/A	Hard Wire Input	N/A
BIT	N/A	BIT	N/A	BIT	N/A	BIT	N/A	BIT	N/A	BIT	N/A	BIT	N/A	BIT	N/A
STEP ACTION		STEP ACTION		STEP ACTION		STEP ACTION		STEP ACTION		STEP ACTION		STEP ACTION		STEP ACTION	
Function	Rotate	Function	Reverse	Function	Delay	Function	Forward	Function	Rotate	Function	Reverse	Function	Forward	Function	Rotate
Speed	33	Speed	33	Speed	33	Speed	33	Speed	33	Speed	33	Speed	33	Speed	33
Navigation	DR	Navigation	DR	Navigation	DR	Navigation	DR	Navigation	DR	Navigation	DR	Navigation	DR	Navigation	DR
Direction	Center	Direction	Center	Direction	Center	Direction	Center	Direction	Center	Direction	Center	Direction	Center	Direction	Center
Size	45	Size	99	Size	5	Size	99	Size	45	Size	104	Size	104	Size	-90
Loss Of Guidance	N/A	Loss Of Guidance	N/A	Loss Of Guidance	N/A	Loss Of Guidance	N/A	Loss Of Guidance	N/A	Loss Of Guidance	N/A	Loss Of Guidance	N/A	Loss Of Guidance	N/A
Obstacle Avoidance	1	Obstacle Avoidance	1	Obstacle Avoidance	1	Obstacle Avoidance	1	Obstacle Avoidance	1	Obstacle Avoidance	1	Obstacle Avoidance	1	Obstacle Avoidance	1
Output	N/a	Output	N/a	Output	#7 pin drop	Output	N/a	Output	N/a	Output	#7 pin raise	Output	N/A	Output	N/A
END OF STEP		END OF STEP		END OF STEP		END OF STEP		END OF STEP		END OF STEP		END OF STEP		END OF STEP	
END MODE	Distance	END MODE	Distance	END MODE	time	END MODE	Distance	END MODE	Distance	END MODE	Distance	END MODE	Distance	END MODE	Distance
END ACTION	Merge	END ACTION	Merge	END ACTION	Merge	END ACTION	Merge	END ACTION	Merge	END ACTION	Merge	END ACTION	Merge	END ACTION	Merge
NEXT ROUTE	10	NEXT ROUTE	10	NEXT ROUTE	10	NEXT ROUTE	10	NEXT ROUTE	10	NEXT ROUTE	10	NEXT ROUTE	10	NEXT ROUTE	10
NEXT STEP	34	NEXT STEP	35	NEXT STEP	36	NEXT STEP	37	NEXT STEP	38	NEXT STEP	39	NEXT STEP	40	NEXT STEP	41

Route 10:41		Route 10:42		Route 10:43		Route 10:44		Route 10:45		Route 10:46		Route 10:47		Route 10:48	
STEP INITIATION		STEP INITIATION		STEP INITIATION		STEP INITIATION		STEP INITIATION		STEP INITIATION		STEP INITIATION		STEP INITIATION	
Go Mode	Auto	Go Mode	Auto	Go Mode	Auto	Go Mode	Auto	Go Mode	Auto	Go Mode	Auto	Go Mode	Auto	Go Mode	Auto
Radio Input	dio Input 1	Radio Input	dio Input 1	Radio Input	dio Input 1	Radio Input	dio Input 1	Radio Input	dio Input 1	Radio Input	dio Input 1	Radio Input	dio Input 1	Radio Input	dio Input 1
Hard Wire Input	N/A	Hard Wire Input	N/A	Hard Wire Input	N/A	Hard Wire Input	N/A	Hard Wire Input	N/A	Hard Wire Input	Cart Prese	Hard Wire Input		Hard Wire Input	
BIT	N/A	BIT	N/A	BIT	N/A	BIT	N/A	BIT	N/A	BIT	N/A	BIT	N/A	BIT	N/A
STEP ACTION		STEP ACTION		STEP ACTION		STEP ACTION		STEP ACTION		STEP ACTION		STEP ACTION		STEP ACTION	
Function	Reverse	Function	Delay	Function	Forward	Function	Rotate	Function	Reverse	Function	Forward	Function	Rotate	Function	Forward
Speed	33	Speed	33	Speed	33	Speed	33	Speed	33	Speed	33	Speed	33	Speed	33
Navigation	DR	Navigation	DR	Navigation	DR	Navigation	DR	Navigation	DR	Navigation	DR	Navigation	DR	Navigation	DR
Direction	Center	Direction	Center	Direction	Center	Direction	Center	Direction	Center	Direction	Center	Direction	Center	Direction	Center
Size	102	Size	5	Size	102	Size	45	Size	99	Size	99	Size	45	Size	174
Loss Of Guidance	N/A	Loss Of Guidance	N/A	Loss Of Guidance	N/A	Loss Of Guidance	N/A	Loss Of Guidance	N/A	Loss Of Guidance	N/A	Loss Of Guidance	N/A	Loss Of Guidance	N/A
Obstacle Avoidance	1	Obstacle Avoidance	1	Obstacle Avoidance	1	Obstacle Avoidance	1	Obstacle Avoidance	1	Obstacle Avoidance	1	Obstacle Avoidance	1	Obstacle Avoidance	1
Output	N/A	Output	#7 Pin Drop	Output	N/a	Output	N/a	Output	#6 Pin Raise	Output	N/a	Output	N/a	Output	N/a
END OF STEP		END OF STEP		END OF STEP		END OF STEP		END OF STEP		END OF STEP		END OF STEP		END OF STEP	
END MODE	Distance	END MODE	Time	END MODE	Distance	END MODE	Distance	END MODE	Distance	END MODE	Distance	END MODE	Distance	END MODE	Distance
END ACTION	Merge	END ACTION	Merge	END ACTION	Merge	END ACTION	Merge	END ACTION	Merge	END ACTION	Merge	END ACTION	Merge	END ACTION	Merge
NEXT ROUTE	10	NEXT ROUTE	10	NEXT ROUTE	10	NEXT ROUTE	10	NEXT ROUTE	10	NEXT ROUTE	10	NEXT ROUTE	10	NEXT ROUTE	10
NEXT STEP	42	NEXT STEP	43	NEXT STEP	44	NEXT STEP	45	NEXT STEP	46	NEXT STEP	47	NEXT STEP	48	NEXT STEP	49

Route 10:49		Route 10:50		Route 10:51		Route 10:52		Route 10:53		Route 10:54		Route 10:55		Route 10:56	
STEP INITIATION		STEP INITIATION		STEP INITIATION		STEP INITIATION		STEP INITIATION		STEP INITIATION		STEP INITIATION		STEP INITIATION	
Go Mode	Auto	Go Mode	Auto	Go Mode	Auto	Go Mode	Auto	Go Mode	Auto	Go Mode	Auto	Go Mode	Auto	Go Mode	Auto
Radio Input	dio Input 1	Radio Input	dio Input 1	Radio Input	dio Input 1	Radio Input	dio Input 1	Radio Input	dio Input 1	Radio Input	dio Input 1	Radio Input	dio Input 1	Radio Input	dio Input 1
Hard Wire Input		Hard Wire Input		Hard Wire Input		Hard Wire Input		Hard Wire Input		Hard Wire Input		Hard Wire Input		Hard Wire Input	
BIT	N/A	BIT	N/A	BIT	N/A	BIT	N/A	BIT	N/A	BIT	N/A	BIT	N/A	BIT	N/A
STEP ACTION		STEP ACTION		STEP ACTION		STEP ACTION		STEP ACTION		STEP ACTION		STEP ACTION		STEP ACTION	
Function	Rotate	Function	Forward	Function	Rotate	Function	Forward	Function	Rotate	Function	Forward	Function	Rotate	Function	Forward
Speed	33	Speed	33	Speed	33	Speed	33	Speed	33	Speed	33	Speed	33	Speed	33
Navigation	DR	Navigation	DR	Navigation	DR	Navigation	DR	Navigation	DR	Navigation	DR	Navigation	DR	Navigation	DR
Direction	Center	Direction	Center	Direction	Center	Direction	Center	Direction	Center	Direction	Center	Direction	Center	Direction	Center
Size	90	Size	1240	Size	-90	Size	2284	Size	90	Size	331	Size	90	Size	208
Loss Of Guidance	N/A	Loss Of Guidance	N/A	Loss Of Guidance	N/A	Loss Of Guidance	N/A	Loss Of Guidance	N/A	Loss Of Guidance	N/A	Loss Of Guidance	N/A	Loss Of Guidance	N/A
Obstacle Avoidance	1	Obstacle Avoidance	1	Obstacle Avoidance	1	Obstacle Avoidance	1	Obstacle Avoidance	1	Obstacle Avoidance	1	Obstacle Avoidance	1	Obstacle Avoidance	1
Output	N/a	Output	N/a	Output	N/a	Output	N/a	Output	N/a	Output	N/a	Output	N/a	Output	N/a
END OF STEP		END OF STEP		END OF STEP		END OF STEP		END OF STEP		END OF STEP		END OF STEP		END OF STEP	
END MODE	Distance	END MODE	Distance	END MODE	Distance	END MODE	Distance	END MODE	Distance	END MODE	Distance	END MODE	Distance	END MODE	Distance
END ACTION	Merge	END ACTION	Merge	END ACTION	Merge	END ACTION	Merge	END ACTION	Merge	END ACTION	Merge	END ACTION	Merge	END ACTION	Merge
NEXT ROUTE	10	NEXT ROUTE	10	NEXT ROUTE	10	NEXT ROUTE	10	NEXT ROUTE	10	NEXT ROUTE	10	NEXT ROUTE	10	NEXT ROUTE	10
NEXT STEP	50	NEXT STEP	51	NEXT STEP	52	NEXT STEP	53	NEXT STEP	54	NEXT STEP	55	NEXT STEP	56	NEXT STEP	57

Route 10:57		Route 10:58		Route 10:59		Route 10:60		Route 10:61		Route 10:62		Route 10:63		Route 10:64	
STEP INITIATION		STEP INITIATION		STEP INITIATION		STEP INITIATION		STEP INITIATION		STEP INITIATION		STEP INITIATION		STEP INITIATION	
Go Mode	Auto	Go Mode	Auto	Go Mode	Auto	Go Mode	Auto	Go Mode	Auto	Go Mode	Auto	Go Mode	Auto	Go Mode	Auto
Radio Input	dio Input 1	Radio Input	dio Input 1	Radio Input	dio Input 1	Radio Input	dio Input 1	Radio Input	dio Input 1	Radio Input	dio Input 1	Radio Input	dio Input 1	Radio Input	dio Input 1
Hard Wire Input		Hard Wire Input		Hard Wire Input		Hard Wire Input		Hard Wire Input		Hard Wire Input		Hard Wire Input		Hard Wire Input	
BIT	N/A	BIT	N/A	BIT	N/A	BIT	N/A	BIT	N/A	BIT	N/A	BIT	N/A	BIT	N/A
STEP ACTION		STEP ACTION		STEP ACTION		STEP ACTION		STEP ACTION		STEP ACTION		STEP ACTION		STEP ACTION	
Function	Rotate	Function	Reverse	Function	Dellay	Function	Forward	Function	Rotate	Function	Forward	Function	Rotate	Function	Forward
Speed	33	Speed	33	Speed	33	Speed	33	Speed	33	Speed	33	Speed	33	Speed	33
Navigation	DR	Navigation	DR	Navigation	DR	Navigation	DR	Navigation	DR	Navigation	DR	Navigation	DR	Navigation	DR
Direction	Center	Direction	Center	Direction	Center	Direction	Center	Direction	Center	Direction	Center	Direction	Center	Direction	Center
Size	90	Size	62	Size	5	Size	62	Size	90	Size	208	Size	-90	Size	331
Loss Of Guidance	N/A	Loss Of Guidance	N/A	Loss Of Guidance	N/A	Loss Of Guidance	N/A	Loss Of Guidance	N/A	Loss Of Guidance	N/A	Loss Of Guidance	N/A	Loss Of Guidance	N/A
Obstacle Avoidance	1	Obstacle Avoidance	1	Obstacle Avoidance	1	Obstacle Avoidance	1	Obstacle Avoidance	1	Obstacle Avoidance	1	Obstacle Avoidance	1	Obstacle Avoidance	1
Output	N/a	Output	N/a	Output	#7 Pin Drop	Output		Output		Output		Output		Output	
END OF STEP		END OF STEP		END OF STEP		END OF STEP		END OF STEP		END OF STEP		END OF STEP		END OF STEP	
END MODE	Distance	END MODE	Distance	END MODE	time	END MODE	Distance	END MODE	Distance	END MODE	Distance	END MODE	Distance	END MODE	Distance
END ACTION	Merge	END ACTION	Merge	END ACTION	Merge	END ACTION	Merge	END ACTION	Merge	END ACTION	Merge	END ACTION	Merge	END ACTION	Merge
NEXT ROUTE	10	NEXT ROUTE	10	NEXT ROUTE	10	NEXT ROUTE	10	NEXT ROUTE	10	NEXT ROUTE	10	NEXT ROUTE	10	NEXT ROUTE	10
NEXT STEP	58	NEXT STEP	59	NEXT STEP	60	NEXT STEP	61	NEXT STEP	62	NEXT STEP	63	NEXT STEP	64	NEXT STEP	65

Route 10:65		Route 10:66		Route 10:67		Route 10:68		Route 10:69		Route 10:70		Route 10:71		Route 10:72	
STEP INITIATION		**STEP INITIATION**		**STEP INITIATION**		**STEP INITIATION**		**STEP INITIATION**		**STEP INITIATION**		**STEP INITIATION**		**STEP INITIATION**	
Go Mode	Auto	**Go Mode**	Auto	**Go Mode**	Auto	**Go Mode**	Auto	**Go Mode**	Auto	**Go Mode**	Auto	**Go Mode**	Auto	**Go Mode**	Auto
Radio Input	dio Input 1-	**Radio Input**	dio Input 1-	**Radio Input**	dio Input 1-	**Radio Input**	dio Input 1-	**Radio Input**	dio Input 1-	**Radio Input**	dio Input 1-	**Radio Input**	dio Input 1-	**Radio Input**	dio Input 1-
Hard Wire Input		**Hard Wire Input**		**Hard Wire Input**	N/a	**Hard Wire Input**	N/a	**Hard Wire Input**	N/a	**Hard Wire Input**	N/a	**Hard Wire Input**	N/a	**Hard Wire Input**	N/a
BIT	N/A	**BIT**	N/A	**BIT**	N/A	**BIT**	N/A	**BIT**	N/A	**BIT**	N/A	**BIT**	N/A	**BIT**	N/A
STEP ACTION		**STEP ACTION**		**STEP ACTION**		**STEP ACTION**		**STEP ACTION**		**STEP ACTION**		**STEP ACTION**		**STEP ACTION**	
Function	Rotate	**Function**	Forward	**Function**	Rotate	**Function**	Forward	**Function**	Rotate	**Function**	Forward	**Function**	Rotate	**Function**	Forward
Speed	33	**Speed**	33	**Speed**	33	**Speed**	33	**Speed**	33	**Speed**	33	**Speed**	33	**Speed**	33
Navigation	DR	**Navigation**	DR	**Navigation**	DR	**Navigation**	DR	**Navigation**	DR	**Navigation**	DR	**Navigation**	DR	**Navigation**	DR
Direction	Center	**Direction**	Center	**Direction**	Center	**Direction**	Center	**Direction**	Center	**Direction**	Center	**Direction**	Center	**Direction**	Center
Size	-90	**Size**	2284	**Size**	90	**Size**	962	**Size**	-90	**Size**	525	**Size**	90	**Size**	417
Loss Of Guidance	N/A	**Loss Of Guidance**	N/A	**Loss Of Guidance**	N/A	**Loss Of Guidance**	N/A	**Loss Of Guidance**	N/A	**Loss Of Guidance**	N/A	**Loss Of Guidance**	N/A	**Loss Of Guidance**	N/A
Obstacle Avoidance	1	**Obstacle Avoidance**	1	**Obstacle Avoidance**	1	**Obstacle Avoidance**	1	**Obstacle Avoidance**	1	**Obstacle Avoidance**	1	**Obstacle Avoidance**	1	**Obstacle Avoidance**	1
Output		**Output**		**Output**	N/a	**Output**	N/a	**Output**	N/a	**Output**	N/a	**Output**	N/a	**Output**	N/a
END OF STEP		**END OF STEP**		**END OF STEP**		**END OF STEP**		**END OF STEP**		**END OF STEP**		**END OF STEP**		**END OF STEP**	
END MODE	Distance	**END MODE**	Distance	**END MODE**	Distance	**END MODE**	Distance	**END MODE**	Distance	**END MODE**	Distance	**END MODE**	Distance	**END MODE**	Distance
END ACTION	Merge	**END ACTION**	Merge	**END ACTION**	Merge	**END ACTION**	Merge	**END ACTION**	Merge	**END ACTION**	Merge	**END ACTION**	Merge	**END ACTION**	Merge
NEXT ROUTE	10	**NEXT ROUTE**	10	**NEXT ROUTE**	10	**NEXT ROUTE**	10	**NEXT ROUTE**	10	**NEXT ROUTE**	10	**NEXT ROUTE**	10	**NEXT ROUTE**	10
NEXT STEP	**66**	**NEXT STEP**	**67**	**NEXT STEP**	**68**	**NEXT STEP**	**69**	**NEXT STEP**	**70**	**NEXT STEP**	**71**	**NEXT STEP**	**72**	**NEXT STEP**	**73**

Route 10:73		Route 10:74		Route 0: 1	
STEP INITIATION		**STEP INITIATION**		**STEP INITIATION**	
Go Mode	Auto	**Go Mode**	Auto	**Go Mode**	nput Trigge
Radio Input	dio Input 1-	**Radio Input**	dio Input 1-	**Radio Input**	dio Input 1-
Hard Wire Input	N/a	**Hard Wire Input**	N/a	**Hard Wire Input**	N/a
BIT	N/A	**BIT**	N/A	**BIT**	BIT #1-#24
STEP ACTION		**STEP ACTION**		**STEP ACTION**	
Function	Rotate	**Function**	Reverse	**Function**	Auto
Speed	33	**Speed**	33	**Speed**	33
Navigation	DR	**Navigation**	DR	**Navigation**	DR
Direction	Center	**Direction**	Center	**Direction**	Center
Size	-90	**Size**	66	**Size**	66
Loss Of Guidance	N/A	**Loss Of Guidance**	N/A	**Loss Of Guidance**	N/A
Obstacle Avoidance	1	**Obstacle Avoidance**	1	**Obstacle Avoidance**	1
Output	N/a	**Output**	N/a	**Output**	N/a
END OF STEP		**END OF STEP**		**END OF STEP**	
END MODE	Distance	**END MODE**	Distance	**END MODE**	Distance
END ACTION	Merge	**END ACTION**	Merge	**END ACTION**	Merge
NEXT ROUTE	10	**NEXT ROUTE**	0	**NEXT ROUTE**	0
NEXT STEP	**74**	**NEXT STEP**	1	**NEXT STEP**	1

Tier 3 Route 11

Route 11:1		Route 11:2		Route 11:3		Route 11:4		Route 11:5		Route 11:6		Route 11:7		Route 11:8	
STEP INITIATION		**STEP INITIATION**		**STEP INITIATION**		**STEP INITIATION**		**STEP INITIATION**		**STEP INITIATION**		**STEP INITIATION**		**STEP INITIATION**	
Go Mode	nput Triggers	**Go Mode**	Auto	**Go Mode**	Auto	**Go Mode**	Auto	**Go Mode**	Auto	**Go Mode**	Auto	**Go Mode**	Auto	**Go Mode**	Auto
Radio Input	adio Input 1-2	**Radio Input**	dio Input 1-	**Radio Input**	dio Input 1-	**Radio Input**	dio Input 1-	**Radio Input**	dio Input 1-	**Radio Input**	dio Input 1-	**Radio Input**	dio Input 1-	**Radio Input**	dio Input 1-
Hard Wire Input	N/A	**Hard Wire Input**	N/A	**Hard Wire Input**	N/A	**Hard Wire Input**	N/A	**Hard Wire Input**	N/A	**Hard Wire Input**	N/A	**Hard Wire Input**	N/A	**Hard Wire Input**	N/A
BIT	Bit #1 off	**BIT**	N/A	**BIT**	N/A	**BIT**	N/A	**BIT**	N/A	**BIT**	N/A	**BIT**	N/A	**BIT**	N/A
Bit#11 On, #18 On	it #5 and 6 Off														
Home Position RFID	it #7 and 9 of														
	t #8 and 10 o														
STEP ACTION		**STEP ACTION**		**STEP ACTION**		**STEP ACTION**		**STEP ACTION**		**STEP ACTION**		**STEP ACTION**		**STEP ACTION**	
Function	Dispatch	**Function**	Forward	**Function**	Rotate	**Function**	Forward	**Function**	Rotate	**Function**	Forward	**Function**	Rotate	**Function**	Forward
Speed	N/A	**Speed**	33	**Speed**	33	**Speed**	33	**Speed**	33	**Speed**	33	**Speed**	33	**Speed**	33
Navigation	N/A	**Navigation**	DR	**Navigation**	DR	**Navigation**	DR	**Navigation**	DR	**Navigation**	DR	**Navigation**	DR	**Navigation**	DR
Direction	N/A	**Direction**	Center	**Direction**	Center	**Direction**	Center	**Direction**	Center	**Direction**	Center	**Direction**	Center	**Direction**	Center
Size	N/A	**Size**	66	**Size**	-90	**Size**	417	**Size**	-90	**Size**	525	**Size**	90	**Size**	962
Loss Of Guidance	N/A	**Loss Of Guidance**	N/A	**Loss Of Guidance**	N/A	**Loss Of Guidance**	N/A	**Loss Of Guidance**	N/A	**Loss Of Guidance**	N/A	**Loss Of Guidance**	N/A	**Loss Of Guidance**	N/A
Obstacle Avoidance	N/A	**Obstacle Avoidance**	1	**Obstacle Avoidance**	1	**Obstacle Avoidance**	1	**Obstacle Avoidance**	1	**Obstacle Avoidance**	1	**Obstacle Avoidance**	1	**Obstacle Avoidance**	1
Output	N/A	**Output**	N/A	**Output**	N/A	**Output**	N/A	**Output**	N/A	**Output**	N/A	**Output**	N/A	**Output**	N/A
END OF STEP		**END OF STEP**		**END OF STEP**		**END OF STEP**		**END OF STEP**		**END OF STEP**		**END OF STEP**		**END OF STEP**	
END MODE	N/A	**END MODE**	Distance	**END MODE**	Distance	**END MODE**	Distance	**END MODE**	Distance	**END MODE**	Distance	**END MODE**	Distance	**END MODE**	Distance
END ACTION	e Bit #11, #1	**END ACTION**	Merge	**END ACTION**	Merge	**END ACTION**	Merge	**END ACTION**	Merge	**END ACTION**	Merge	**END ACTION**	Merge	**END ACTION**	Merge
NEXT ROUTE	11	**NEXT ROUTE**	11	**NEXT ROUTE**	11	**NEXT ROUTE**	11	**NEXT ROUTE**	11	**NEXT ROUTE**	11	**NEXT ROUTE**	11	**NEXT ROUTE**	11
NEXT STEP	**2**	**NEXT STEP**	**3**	**NEXT STEP**	**4**	**NEXT STEP**	**5**	**NEXT STEP**	**6**	**NEXT STEP**	**7**	**NEXT STEP**	**8**	**NEXT STEP**	**9**

Route 11:9		Route 11:10		Route 11:11		Route 11:12		Route 11:13		Route 11:14		Route 11:15		Route 11:16	
STEP INITIATION		**STEP INITIATION**		**STEP INITIATION**		**STEP INITIATION**		**STEP INITIATION**		**STEP INITIATION**		**STEP INITIATION**		**STEP INITIATION**	
Go Mode	Auto	**Go Mode**	Auto	**Go Mode**	Auto	**Go Mode**	Auto	**Go Mode**	Auto	**Go Mode**	Auto	**Go Mode**	Auto	**Go Mode**	Auto
Radio Input	dio Input 1-	**Radio Input**	dio Input 1-	**Radio Input**	dio Input 1-	**Radio Input**	dio Input 1-	**Radio Input**	dio Input 1-	**Radio Input**	dio Input 1-	**Radio Input**	dio Input 1-	**Radio Input**	dio Input 1-
Hard Wire Input	N/A	**Hard Wire Input**	N/A	**Hard Wire Input**	N/A	**Hard Wire Input**	N/A	**Hard Wire Input**	N/A	**Hard Wire Input**	N/A	**Hard Wire Input**	N/A	**Hard Wire Input**	N/A
BIT	N/A	**BIT**	N/A	**BIT**	N/A	**BIT**	N/A	**BIT**	N/A	**BIT**	N/A	**BIT**	N/A	**BIT**	N/A
STEP ACTION		**STEP ACTION**		**STEP ACTION**		**STEP ACTION**		**STEP ACTION**		**STEP ACTION**		**STEP ACTION**		**STEP ACTION**	
Function	Rotate	**Function**	Forward	**Function**	Rotate	**Function**	Forward	**Function**	Rotate	**Function**	Forward	**Function**	Rotate	**Function**	Reverse
Speed	33	**Speed**	33	**Speed**	33	**Speed**	33	**Speed**	33	**Speed**	33	**Speed**	33	**Speed**	33
Navigation	DR	**Navigation**	DR	**Navigation**	DR	**Navigation**	DR	**Navigation**	DR	**Navigation**	DR	**Navigation**	DR	**Navigation**	DR
Direction	Center	**Direction**	Center	**Direction**	Center	**Direction**	Center	**Direction**	Center	**Direction**	Center	**Direction**	Center	**Direction**	Center
Size	-90	**Size**	2284	**Size**	90	**Size**	331	**Size**	90	**Size**	274	**Size**	90	**Size**	62
Loss Of Guidance	N/A	**Loss Of Guidance**	N/A	**Loss Of Guidance**	N/A	**Loss Of Guidance**	N/A	**Loss Of Guidance**	N/A	**Loss Of Guidance**	N/A	**Loss Of Guidance**	N/A	**Loss Of Guidance**	N/A
Obstacle Avoidance	1	**Obstacle Avoidance**	1	**Obstacle Avoidance**	1	**Obstacle Avoidance**	1	**Obstacle Avoidance**	1	**Obstacle Avoidance**	1	**Obstacle Avoidance**	1	**Obstacle Avoidance**	1
Output	N/A	**Output**	N/A	**Output**	N/A	**Output**	N/A	**Output**	N/A	**Output**	N/A	**Output**	N/A	**Output**	#6 Pin Up
END OF STEP		**END OF STEP**		**END OF STEP**		**END OF STEP**		**END OF STEP**		**END OF STEP**		**END OF STEP**		**END OF STEP**	
END MODE	Distance	**END MODE**	Distance	**END MODE**	Distance	**END MODE**	Distance	**END MODE**	Distance	**END MODE**	Distance	**END MODE**	Distance	**END MODE**	Distance
END ACTION	Merge	**END ACTION**	Merge	**END ACTION**	Merge	**END ACTION**	Merge	**END ACTION**	Merge	**END ACTION**	Merge	**END ACTION**	Merge	**END ACTION**	Merge
NEXT ROUTE	11	**NEXT ROUTE**	11	**NEXT ROUTE**	11	**NEXT ROUTE**	11	**NEXT ROUTE**	11	**NEXT ROUTE**	11	**NEXT ROUTE**	11	**NEXT ROUTE**	11
NEXT STEP	**10**	**NEXT STEP**	**11**	**NEXT STEP**	**12**	**NEXT STEP**	**13**	**NEXT STEP**	**14**	**NEXT STEP**	**15**	**NEXT STEP**	**16**	**NEXT STEP**	**17**

Route 11:17		Route 11:18		Route 11:19		Route 11:20		Route 11:21		Route 11:22		Route 11:23		Route 11:24	
STEP INITIATION		**STEP INITIATION**		**STEP INITIATION**		**STEP INITIATION**		**STEP INITIATION**		**STEP INITIATION**		**STEP INITIATION**		**STEP INITIATION**	
Go Mode	Auto	**Go Mode**	Auto	**Go Mode**	Auto	**Go Mode**	Auto	**Go Mode**	Auto	**Go Mode**	Auto	**Go Mode**	Auto	**Go Mode**	Auto
Radio Input	dio Input 1-	**Radio Input**	dio Input 1-	**Radio Input**	dio Input 1-	**Radio Input**	dio Input 1-	**Radio Input**	dio Input 1-	**Radio Input**	dio Input 1-	**Radio Input**	dio Input 1-	**Radio Input**	dio Input 1-
Hard Wire Input	N/A	**Hard Wire Input**	N/A	**Hard Wire Input**	N/A	**Hard Wire Input**	N/A	**Hard Wire Input**	N/A	**Hard Wire Input**	N/A	**Hard Wire Input**	N/A	**Hard Wire Input**	N/A
BIT	N/A	**BIT**	N/A	**BIT**	N/A	**BIT**	N/A	**BIT**	N/A	**BIT**	N/A	**BIT**	N/A	**BIT**	N/A
STEP ACTION		**STEP ACTION**		**STEP ACTION**		**STEP ACTION**		**STEP ACTION**		**EP ACTION**		**STEP ACTION**		**STEP ACTION**	
Function	Forward	**Function**	Rotate	**Function**	Forward	**Function**	Rotate	**Function**	Forward	**Function**	Rotate	**Function**	Forward	**Function**	Rotate
Speed	33	**Speed**	33	**Speed**	33	**Speed**	33	**Speed**	33	**Speed**	33	**Speed**	33	**Speed**	33
Navigation	DR	**Navigation**	DR	**Navigation**	DR	**Navigation**	DR	**Navigation**	DR	**Navigation**	DR	**Navigation**	DR	**Navigation**	DR
Direction	Center	**Direction**	Center	**Direction**	Center	**Direction**	Center	**Direction**	Center	**Direction**	Center	**Direction**	Center	**Direction**	Center
Size	62	**Size**	90	**Size**	274	**Size**	-90	**Size**	331	**Size**	-90	**Size**	2284	**Size**	90
Loss Of Guidance	N/A	**Loss Of Guidance**	N/A	**Loss Of Guidance**	N/A	**Loss Of Guidance**	N/A	**Loss Of Guidance**	N/A	**Loss Of Guidance**	N/A	**Loss Of Guidance**	N/A	**Loss Of Guidance**	N/A
Obstacle Avoidance	1	**Obstacle Avoidance**	1	**Obstacle Avoidance**	1	**Obstacle Avoidance**	1	**Obstacle Avoidance**	1	**Obstacle Avoidance**	1	**Obstacle Avoidance**	1	**Obstacle Avoidance**	1
Output	N/A	**Output**	N/A	**Output**	N/A	**Output**	N/A	**Output**	N/A	**Output**	N/A	**Output**	N/A	**Output**	N/A
END OF STEP		**END OF STEP**		**END OF STEP**		**END OF STEP**		**END OF STEP**		**ID OF STEP**		**END OF STEP**		**END OF STEP**	
END MODE	Distance	**END MODE**	Distance	**END MODE**	Distance	**END MODE**	Distance	**END MODE**	Distance	**END MODE**	Distance	**END MODE**	Distance	**END MODE**	Distance
END ACTION	Merge	**END ACTION**	Merge	**END ACTION**	Merge	**END ACTION**	Merge	**END ACTION**	Merge	**END ACTION**	Merge	**END ACTION**	Merge	**END ACTION**	Merge
NEXT ROUTE	11	**NEXT ROUTE**	11	**NEXT ROUTE**	11	**NEXT ROUTE**	11	**NEXT ROUTE**	11	**NEXT ROUTE**	11	**NEXT ROUTE**	11	**NEXT ROUTE**	11
NEXT STEP	**18**	**NEXT STEP**	**19**	**NEXT STEP**	**20**	**NEXT STEP**	**21**	**NEXT STEP**	**22**	**NEXT STEP**	**23**	**NEXT STEP**	**24**	**NEXT STEP**	**25**

Route 11:25		Route 11:26		Route 11:27		Route 11:28		Route 11:29		Route 11:30		Route 11:31		Route 11:32	
STEP INITIATION		**STEP INITIATION**		**STEP INITIATION**		**STEP INITIATION**		**STEP INITIATION**		**STEP INITIATION**		**STEP INITIATION**		**STEP INITIATION**	
Go Mode	Auto	**Go Mode**	Auto	**Go Mode**	Auto	**Go Mode**	Auto	**Go Mode**	Auto	**Go Mode**	Auto	**Go Mode**	Auto	**Go Mode**	Auto
Radio Input	dio Input 1-	**Radio Input**	dio Input 1-	**Radio Input**	dio Input 1-	**Radio Input**	dio Input 1-	**Radio Input**	dio Input 1-	**Radio Input**	dio Input 1-	**Radio Input**	dio Input 1-	**Radio Input**	dio Input 1-
Hard Wire Input	N/A	**Hard Wire Input**	N/A	**Hard Wire Input**	N/A	**Hard Wire Input**	N/A	**Hard Wire Input**	N/A	**Hard Wire Input**	N/A	**Hard Wire Input**	N/A	**Hard Wire Input**	Cart prese
BIT	N/A	**BIT**	N/A	**BIT**	N/A	**BIT**	N/A	**BIT**	N/A	**BIT**	N/A	**BIT**	N/A	**BIT**	N/A
STEP ACTION		**STEP ACTION**		**STEP ACTION**		**STEP ACTION**		**STEP ACTION**		**STEP ACTION**		**STEP ACTION**		**STEP ACTION**	
Function	Forward	**Function**	Rotate	**Function**	Reverse	**Function**	Delay	**Function**	Forward	**Function**	Rotate	**Function**	Reverse	**Function**	Forward
Speed	33	**Speed**	33	**Speed**	33	**Speed**	33	**Speed**	33	**Speed**	33	**Speed**	33	**Speed**	33
Navigation	DR	**Navigation**	DR	**Navigation**	DR	**Navigation**	DR	**Navigation**	DR	**Navigation**	DR	**Navigation**	DR	**Navigation**	DR
Direction	Center	**Direction**	Center	**Direction**	Center	**Direction**	Center	**Direction**	Center	**Direction**	Center	**Direction**	Center	**Direction**	Center
Size	1240	**Size**	90	**Size**	279	**Size**	5	**Size**	104	**Size**	-90	**Size**	102	**Size**	102
Loss Of Guidance	N/A	**Loss Of Guidance**	N/A	**Loss Of Guidance**	N/A	**Loss Of Guidance**	N/A	**Loss Of Guidance**	N/A	**Loss Of Guidance**	N/A	**Loss Of Guidance**	N/A	**Loss Of Guidance**	N/A
Obstacle Avoidance	1	**Obstacle Avoidance**	1	**Obstacle Avoidance**	1	**Obstacle Avoidance**	1	**Obstacle Avoidance**	1	**Obstacle Avoidance**	1	**Obstacle Avoidance**	1	**Obstacle Avoidance**	1
Output	N/A	**Output**	N/A	**Output**	N/A	**Output**	#7 Pin Drop	**Output**		**Output**		**Output**	#6 pin up	**Output**	N/a
END OF STEP		**END OF STEP**		**END OF STEP**		**END OF STEP**		**END OF STEP**		**END OF STEP**		**END OF STEP**		**END OF STEP**	
END MODE	Distance	**END MODE**	Distance	**END MODE**	Distance	**END MODE**	time	**END MODE**	Distance	**END MODE**	Distance	**END MODE**	Distance	**END MODE**	Distance
END ACTION	Merge	**END ACTION**	Merge	**END ACTION**	Merge	**END ACTION**	Merge	**END ACTION**	Merge	**END ACTION**	Merge	**END ACTION**	Merge	**END ACTION**	Merge
NEXT ROUTE	11	**NEXT ROUTE**	11	**NEXT ROUTE**	11	**NEXT ROUTE**	11	**NEXT ROUTE**	11	**NEXT ROUTE**	11	**NEXT ROUTE**	11	**NEXT ROUTE**	11
NEXT STEP	**26**	**NEXT STEP**	**27**	**NEXT STEP**	**28**	**NEXT STEP**	**29**	**NEXT STEP**	**30**	**NEXT STEP**	**31**	**NEXT STEP**	**32**	**NEXT STEP**	**33**

Route 11:33		Route 11:34		Route 11:35		Route 11:36		Route 11:37		Route 11:38		Route 11:39		Route 11:40	
STEP INITIATION		STEP INITIATION		STEP INITIATION		STEP INITIATION		STEP INITIATION		STEP INITIATION		STEP INITIATION		STEP INITIATION	
Go Mode	Auto	Go Mode	Auto	Go Mode	Auto	Go Mode	Auto	Go Mode	Auto	Go Mode	Auto	Go Mode	Auto	Go Mode	Auto
Radio Input	dio Input 1	Radio Input	dio Input 1	Radio Input	dio Input 1	Radio Input	dio Input 1	Radio Input	dio Input 1	Radio Input	dio Input 1	Radio Input	dio Input 1	Radio Input	dio Input 1
Hard Wire Input	N/A	Hard Wire Input	N/A	Hard Wire Input	N/A	Hard Wire Input	N/A	Hard Wire Input	N/A	Hard Wire Input	N/A	Hard Wire Input	N/A	Hard Wire Input	N/A
BIT	N/A	BIT	N/A	BIT	N/A	BIT	N/A	BIT	N/A	BIT	N/A	BIT	N/A	BIT	N/A
STEP ACTION		STEP ACTION		STEP ACTION		STEP ACTION		STEP ACTION		STEP ACTION		STEP ACTION		STEP ACTION	
Function	Rotate	Function	Reverse	Function	Delay	Function	Forward	Function	Rotate	Function	Reverse	Function	Forward	Function	Rotate
Speed	33	Speed	33	Speed	33	Speed	33	Speed	33	Speed	33	Speed	33	Speed	33
Navigation	DR	Navigation	DR	Navigation	DR	Navigation	DR	Navigation	DR	Navigation	DR	Navigation	DR	Navigation	DR
Direction	Center	Direction	Center	Direction	Center	Direction	Center	Direction	Center	Direction	Center	Direction	Center	Direction	Center
Size	45	Size	99	Size	5	Size	99	Size	45	Size	104	Size	104	Size	-90
Loss Of Guidance	N/A	Loss Of Guidance	N/A	Loss Of Guidance	N/A	Loss Of Guidance	N/A	Loss Of Guidance	N/A	Loss Of Guidance	N/A	Loss Of Guidance	N/A	Loss Of Guidance	N/A
Obstacle Avoidance	1	Obstacle Avoidance	1	Obstacle Avoidance	1	Obstacle Avoidance	1	Obstacle Avoidance	1	Obstacle Avoidance	1	Obstacle Avoidance	1	Obstacle Avoidance	1
Output	N/a	Output	N/a	Output	#7 pin drop	Output	N/a	Output	N/a	Output	#7 pin raise	Output	N/A	Output	N/A
END OF STEP		END OF STEP		END OF STEP		END OF STEP		END OF STEP		END OF STEP		END OF STEP		END OF STEP	
END MODE	Distance	END MODE	Distance	END MODE	time	END MODE	Distance	END MODE	Distance	END MODE	Distance	END MODE	Distance	END MODE	Distance
END ACTION	Merge	END ACTION	Merge	END ACTION	Merge	END ACTION	Merge	END ACTION	Merge	END ACTION	Merge	END ACTION	Merge	END ACTION	Merge
NEXT ROUTE	11	NEXT ROUTE	11	NEXT ROUTE	11	NEXT ROUTE	11	NEXT ROUTE	11	NEXT ROUTE	11	NEXT ROUTE	11	NEXT ROUTE	11
NEXT STEP	34	NEXT STEP	35	NEXT STEP	36	NEXT STEP	37	NEXT STEP	38	NEXT STEP	39	NEXT STEP	40	NEXT STEP	41

Route 11:41		Route 11:42		Route 11:43		Route 11:44		Route 11:45		Route 11:46		Route 11:47		Route 11:48	
STEP INITIATION		STEP INITIATION		STEP INITIATION		STEP INITIATION		STEP INITIATION		STEP INITIATION		STEP INITIATION		STEP INITIATION	
Go Mode	Auto	Go Mode	Auto	Go Mode	Auto	Go Mode	Auto	Go Mode	Auto	Go Mode	Auto	Go Mode	Auto	Go Mode	Auto
Radio Input	dio Input 1	Radio Input	dio Input 1	Radio Input	dio Input 1	Radio Input	dio Input 1	Radio Input	dio Input 1	Radio Input	dio Input 1	Radio Input	dio Input 1	Radio Input	dio Input 1
Hard Wire Input	N/A	Hard Wire Input	N/A	Hard Wire Input	N/A	Hard Wire Input	N/A	Hard Wire Input	N/A	Hard Wire Input	Cart Prese	Hard Wire Input		Hard Wire Input	
BIT	N/A	BIT	N/A	BIT	N/A	BIT	N/A	BIT	N/A	BIT	N/A	BIT	N/A	BIT	N/A
STEP ACTION		STEP ACTION		STEP ACTION		STEP ACTION		STEP ACTION		STEP ACTION		STEP ACTION		STEP ACTION	
Function	Reverse	Function	Delay	Function	Forward	Function	Rotate	Function	Reverse	Function	Forward	Function	Rotate	Function	Forward
Speed	33	Speed	33	Speed	33	Speed	33	Speed	33	Speed	33	Speed	33	Speed	33
Navigation	DR	Navigation	DR	Navigation	DR	Navigation	DR	Navigation	DR	Navigation	DR	Navigation	DR	Navigation	DR
Direction	Center	Direction	Center	Direction	Center	Direction	Center	Direction	Center	Direction	Center	Direction	Center	Direction	Center
Size	102	Size	5	Size	102	Size	45	Size	99	Size	99	Size	45	Size	174
Loss Of Guidance	N/A	Loss Of Guidance	N/A	Loss Of Guidance	N/A	Loss Of Guidance	N/A	Loss Of Guidance	N/A	Loss Of Guidance	N/A	Loss Of Guidance	N/A	Loss Of Guidance	N/A
Obstacle Avoidance	1	Obstacle Avoidance	1	Obstacle Avoidance	1	Obstacle Avoidance	1	Obstacle Avoidance	1	Obstacle Avoidance	1	Obstacle Avoidance	1	Obstacle Avoidance	1
Output	N/A	Output	#7 Pin Drop	Output	N/a	Output	N/a	Output	#6 Pin Raise	Output	N/a	Output	N/a	Output	N/a
END OF STEP		END OF STEP		END OF STEP		END OF STEP		END OF STEP		END OF STEP		END OF STEP		END OF STEP	
END MODE	Distance	END MODE	Time	END MODE	Distance	END MODE	Distance	END MODE	Distance	END MODE	Distance	END MODE	Distance	END MODE	Distance
END ACTION	Merge	END ACTION	Merge	END ACTION	Merge	END ACTION	Merge	END ACTION	Merge	END ACTION	Merge	END ACTION	Merge	END ACTION	Merge
NEXT ROUTE	11	NEXT ROUTE	11	NEXT ROUTE	11	NEXT ROUTE	11	NEXT ROUTE	11	NEXT ROUTE	11	NEXT ROUTE	11	NEXT ROUTE	11
NEXT STEP	42	NEXT STEP	43	NEXT STEP	44	NEXT STEP	45	NEXT STEP	46	NEXT STEP	47	NEXT STEP	48	NEXT STEP	49

Route 11:49		Route 11:50		Route 11:51		Route 11:52		Route 11:53		Route 11:54		Route 11:55		Route 11:56	
STEP INITIATION		STEP INITIATION		STEP INITIATION		STEP INITIATION		STEP INITIATION		STEP INITIATION		STEP INITIATION		STEP INITIATION	
Go Mode	Auto	Go Mode	Auto	Go Mode	Auto	Go Mode	Auto	Go Mode	Auto	Go Mode	Auto	Go Mode	Auto	Go Mode	Auto
Radio Input	dio Input 1	Radio Input	dio Input 1	Radio Input	dio Input 1	Radio Input	dio Input 1	Radio Input	dio Input 1	Radio Input	dio Input 1	Radio Input	dio Input 1	Radio Input	dio Input 1
Hard Wire Input		Hard Wire Input		Hard Wire Input		Hard Wire Input		Hard Wire Input		Hard Wire Input		Hard Wire Input		Hard Wire Input	
BIT	N/A	BIT	N/A	BIT	N/A	BIT	N/A	BIT	N/A	BIT	N/A	BIT	N/A	BIT	N/A
STEP ACTION		STEP ACTION		STEP ACTION		STEP ACTION		STEP ACTION		STEP ACTION		STEP ACTION		STEP ACTION	
Function	Rotate	Function	Forward	Function	Rotate	Function	Forward	Function	Rotate	Function	Forward	Function	Rotate	Function	Forward
Speed	33	Speed	33	Speed	33	Speed	33	Speed	33	Speed	33	Speed	33	Speed	33
Navigation	DR	Navigation	DR	Navigation	DR	Navigation	DR	Navigation	DR	Navigation	DR	Navigation	DR	Navigation	DR
Direction	Center	Direction	Center	Direction	Center	Direction	Center	Direction	Center	Direction	Center	Direction	Center	Direction	Center
Size	90	Size	1240	Size	-90	Size	2284	Size	90	Size	331	Size	90	Size	274
Loss Of Guidance	N/A	Loss Of Guidance	N/A	Loss Of Guidance	N/A	Loss Of Guidance	N/A	Loss Of Guidance	N/A	Loss Of Guidance	N/A	Loss Of Guidance	N/A	Loss Of Guidance	N/A
Obstacle Avoidance	1	Obstacle Avoidance	1	Obstacle Avoidance	1	Obstacle Avoidance	1	Obstacle Avoidance	1	Obstacle Avoidance	1	Obstacle Avoidance	1	Obstacle Avoidance	1
Output	N/a	Output	N/a	Output	N/a	Output	N/a	Output	N/a	Output	N/a	Output	N/a	Output	N/a
END OF STEP		END OF STEP		END OF STEP		END OF STEP		END OF STEP		END OF STEP		END OF STEP		END OF STEP	
END MODE	Distance	END MODE	Distance	END MODE	Distance	END MODE	Distance	END MODE	Distance	END MODE	Distance	END MODE	Distance	END MODE	Distance
END ACTION	Merge	END ACTION	Merge	END ACTION	Merge	END ACTION	Merge	END ACTION	Merge	END ACTION	Merge	END ACTION	Merge	END ACTION	Merge
NEXT ROUTE	11	NEXT ROUTE	11	NEXT ROUTE	11	NEXT ROUTE	11	NEXT ROUTE	11	NEXT ROUTE	11	NEXT ROUTE	11	NEXT ROUTE	11
NEXT STEP	50	NEXT STEP	51	NEXT STEP	52	NEXT STEP	53	NEXT STEP	54	NEXT STEP	55	NEXT STEP	56	NEXT STEP	57

Route 11:57		Route 11:58		Route 11:59		Route 11:60		Route 11:61		Route 11:62		Route 11:63		Route 11:64	
STEP INITIATION		STEP INITIATION		STEP INITIATION		STEP INITIATION		STEP INITIATION		STEP INITIATION		STEP INITIATION		STEP INITIATION	
Go Mode	Auto	Go Mode	Auto	Go Mode	Auto	Go Mode	Auto	Go Mode	Auto	Go Mode	Auto	Go Mode	Auto	Go Mode	Auto
Radio Input	dio Input 1	Radio Input	dio Input 1	Radio Input	dio Input 1	Radio Input	dio Input 1	Radio Input	dio Input 1	Radio Input	dio Input 1	Radio Input	dio Input 1	Radio Input	dio Input 1
Hard Wire Input		Hard Wire Input		Hard Wire Input		Hard Wire Input		Hard Wire Input		Hard Wire Input		Hard Wire Input		Hard Wire Input	
BIT	N/A	BIT	N/A	BIT	N/A	BIT	N/A	BIT	N/A	BIT	N/A	BIT	N/A	BIT	N/A
STEP ACTION		STEP ACTION		STEP ACTION		STEP ACTION		STEP ACTION		STEP ACTION		STEP ACTION		STEP ACTION	
Function	Rotate	Function	Reverse	Function	Dellay	Function	Forward	Function	Rotate	Function	Forward	Function	Rotate	Function	Forward
Speed	33	Speed	33	Speed	33	Speed	33	Speed	33	Speed	33	Speed	33	Speed	33
Navigation	DR	Navigation	DR	Navigation	DR	Navigation	DR	Navigation	DR	Navigation	DR	Navigation	DR	Navigation	DR
Direction	Center	Direction	Center	Direction	Center	Direction	Center	Direction	Center	Direction	Center	Direction	Center	Direction	Center
Size	90	Size	62	Size	5	Size	62	Size	90	Size	274	Size	-90	Size	331
Loss Of Guidance	N/A	Loss Of Guidance	N/A	Loss Of Guidance	N/A	Loss Of Guidance	N/A	Loss Of Guidance	N/A	Loss Of Guidance	N/A	Loss Of Guidance	N/A	Loss Of Guidance	N/A
Obstacle Avoidance	1	Obstacle Avoidance	1	Obstacle Avoidance	1	Obstacle Avoidance	1	Obstacle Avoidance	1	Obstacle Avoidance	1	Obstacle Avoidance	1	Obstacle Avoidance	1
Output	N/a	Output	N/a	Output	#7 Pin Drop	Output		Output		Output		Output		Output	
END OF STEP		END OF STEP		END OF STEP		END OF STEP		END OF STEP		END OF STEP		END OF STEP		END OF STEP	
END MODE	Distance	END MODE	Distance	END MODE	time	END MODE	Distance	END MODE	Distance	END MODE	Distance	END MODE	Distance	END MODE	Distance
END ACTION	Merge	END ACTION	Merge	END ACTION	Merge	END ACTION	Merge	END ACTION	Merge	END ACTION	Merge	END ACTION	Merge	END ACTION	Merge
NEXT ROUTE	11	NEXT ROUTE	11	NEXT ROUTE	11	NEXT ROUTE	11	NEXT ROUTE	11	NEXT ROUTE	11	NEXT ROUTE	11	NEXT ROUTE	11
NEXT STEP	58	NEXT STEP	59	NEXT STEP	60	NEXT STEP	61	NEXT STEP	62	NEXT STEP	63	NEXT STEP	64	NEXT STEP	65

Route 11:65		Route 11:66		Route 11:67		Route 11:68		Route 11:69		Route 11:70		Route 11:71		Route 11:72	
STEP INITIATION		**STEP INITIATION**		**STEP INITIATION**		**STEP INITIATION**		**STEP INITIATION**		**STEP INITIATION**		**STEP INITIATION**		**STEP INITIATION**	
Go Mode	Auto	**Go Mode**	Auto	**Go Mode**	Auto	**Go Mode**	Auto	**Go Mode**	Auto	**Go Mode**	Auto	**Go Mode**	Auto	**Go Mode**	Auto
Radio Input	dio Input 1-	**Radio Input**	dio Input 1-	**Radio Input**	dio Input 1-	**Radio Input**	dio Input 1-	**Radio Input**	dio Input 1-	**Radio Input**	dio Input 1-	**Radio Input**	dio Input 1-	**Radio Input**	dio Input 1-
Hard Wire Input		**Hard Wire Input**		**Hard Wire Input**	N/a	**Hard Wire Input**	N/a	**Hard Wire Input**	N/a	**Hard Wire Input**	N/a	**Hard Wire Input**	N/a	**Hard Wire Input**	N/a
BIT	N/A	**BIT**	N/A	**BIT**	N/A	**BIT**	N/A	**BIT**	N/A	**BIT**	N/A	**BIT**	N/A	**BIT**	N/A
STEP ACTION		**STEP ACTION**		**STEP ACTION**		**STEP ACTION**		**STEP ACTION**		**STEP ACTION**		**STEP ACTION**		**STEP ACTION**	
Function	Rotate	**Function**	Forward	**Function**	Rotate	**Function**	Forward	**Function**	Rotate	**Function**	Forward	**Function**	Rotate	**Function**	Forward
Speed	33	**Speed**	33	**Speed**	33	**Speed**	33	**Speed**	33	**Speed**	33	**Speed**	33	**Speed**	33
Navigation	DR	**Navigation**	DR	**Navigation**	DR	**Navigation**	DR	**Navigation**	DR	**Navigation**	DR	**Navigation**	DR	**Navigation**	DR
Direction	Center	**Direction**	Center	**Direction**	Center	**Direction**	Center	**Direction**	Center	**Direction**	Center	**Direction**	Center	**Direction**	Center
Size	-90	**Size**	2284	**Size**	90	**Size**	962	**Size**	-90	**Size**	525	**Size**	90	**Size**	417
Loss Of Guidance	N/A	**Loss Of Guidance**	N/A	**Loss Of Guidance**	N/A	**Loss Of Guidance**	N/A	**Loss Of Guidance**	N/A	**Loss Of Guidance**	N/A	**Loss Of Guidance**	N/A	**Loss Of Guidance**	N/A
Obstacle Avoidance	1	**Obstacle Avoidance**	1	**Obstacle Avoidance**	1	**Obstacle Avoidance**	1	**Obstacle Avoidance**	1	**Obstacle Avoidance**	1	**Obstacle Avoidance**	1	**Obstacle Avoidance**	1
Output		**Output**		**Output**	N/a	**Output**	N/a	**Output**	N/a	**Output**	N/a	**Output**	N/a	**Output**	N/a
END OF STEP		**END OF STEP**		**END OF STEP**		**END OF STEP**		**END OF STEP**		**END OF STEP**		**END OF STEP**		**END OF STEP**	
END MODE	Distance	**END MODE**	Distance	**END MODE**	Distance	**END MODE**	Distance	**END MODE**	Distance	**END MODE**	Distance	**END MODE**	Distance	**END MODE**	Distance
END ACTION	Merge	**END ACTION**	Merge	**END ACTION**	Merge	**END ACTION**	Merge	**END ACTION**	Merge	**END ACTION**	Merge	**END ACTION**	Merge	**END ACTION**	Merge
NEXT ROUTE	11	**NEXT ROUTE**	11	**NEXT ROUTE**	11	**NEXT ROUTE**	11	**NEXT ROUTE**	11	**NEXT ROUTE**	11	**NEXT ROUTE**	11	**NEXT ROUTE**	11
NEXT STEP	**66**	**NEXT STEP**	**67**	**NEXT STEP**	**68**	**NEXT STEP**	**69**	**NEXT STEP**	**70**	**NEXT STEP**	**71**	**NEXT STEP**	**72**	**NEXT STEP**	**73**

Route 11:73		Route 11:74		Route 0: 1	
STEP INITIATION		**STEP INITIATION**		**STEP INITIATION**	
Go Mode	Auto	**Go Mode**	Auto	**Go Mode**	nput Trigge
Radio Input	dio Input 1-	**Radio Input**	dio Input 1-	**Radio Input**	dio Input 1-
Hard Wire Input	N/a	**Hard Wire Input**	N/a	**Hard Wire Input**	N/a
BIT	N/A	**BIT**	N/A	**BIT**	BIT #1-#24
STEP ACTION		**STEP ACTION**		**STEP ACTION**	
Function	Rotate	**Function**	Reverse	**Function**	Auto
Speed	33	**Speed**	33	**Speed**	33
Navigation	DR	**Navigation**	DR	**Navigation**	DR
Direction	Center	**Direction**	Center	**Direction**	Center
Size	-90	**Size**	66	**Size**	66
Loss Of Guidance	N/A	**Loss Of Guidance**	N/A	**Loss Of Guidance**	N/A
Obstacle Avoidance	1	**Obstacle Avoidance**	1	**Obstacle Avoidance**	1
Output	N/a	**Output**	N/a	**Output**	N/a
END OF STEP		**END OF STEP**		**END OF STEP**	
END MODE	Distance	**END MODE**	Distance	**END MODE**	Distance
END ACTION	Merge	**END ACTION**	Merge	**END ACTION**	Merge
NEXT ROUTE	11	**NEXT ROUTE**	0	**NEXT ROUTE**	0
NEXT STEP	**74**	**NEXT STEP**	1	**NEXT STEP**	1

Tier 3 Route 12

Route 12:1		Route 12:2		Route 12:3		Route 12:4		Route 12:5		Route 12:6		Route 12:7		Route 12:8	
STEP INITIATION		**STEP INITIATION**		**STEP INITIATION**		**STEP INITIATION**		**STEP INITIATION**		**STEP INITIATION**		**STEP INITIATION**		**STEP INITIATION**	
Go Mode	nput Triggers	**Go Mode**	Auto	**Go Mode**	Auto	**Go Mode**	Auto	**Go Mode**	Auto	**Go Mode**	Auto	**Go Mode**	Auto	**Go Mode**	Auto
Radio Input	adio Input 1-2	**Radio Input**	dio Input 1-	**Radio Input**	dio Input 1-	**Radio Input**	dio Input 1-	**Radio Input**	dio Input 1-	**Radio Input**	dio Input 1-	**Radio Input**	dio Input 1-	**Radio Input**	dio Input 1-
Hard Wire Input	N/A	**Hard Wire Input**	N/A	**Hard Wire Input**	N/A	**Hard Wire Input**	N/A	**Hard Wire Input**	N/A	**Hard Wire Input**	N/A	**Hard Wire Input**	N/A	**Hard Wire Input**	N/A
BIT	Bit #1 off	**BIT**	N/A	**BIT**	N/A	**BIT**	N/A	**BIT**	N/A	**BIT**	N/A	**BIT**	N/A	**BIT**	N/A
Bit#11 On, #19 On	it #5 and 6 Off														
Home Position RFID	it #7 and 9 of														
	t #8 and 10 o														
STEP ACTION		**STEP ACTION**		**STEP ACTION**		**STEP ACTION**		**STEP ACTION**		**STEP ACTION**		**STEP ACTION**		**STEP ACTION**	
Function	Dispatch	**Function**	Forward	**Function**	Rotate	**Function**	Forward	**Function**	Rotate	**Function**	Forward	**Function**	Rotate	**Function**	Forward
Speed	N/A	**Speed**	33	**Speed**	33	**Speed**	33	**Speed**	33	**Speed**	33	**Speed**	33	**Speed**	33
Navigation	N/A	**Navigation**	DR	**Navigation**	DR	**Navigation**	DR	**Navigation**	DR	**Navigation**	DR	**Navigation**	DR	**Navigation**	DR
Direction	N/A	**Direction**	Center	**Direction**	Center	**Direction**	Center	**Direction**	Center	**Direction**	Center	**Direction**	Center	**Direction**	Center
Size	N/A	**Size**	66	**Size**	-90	**Size**	417	**Size**	-90	**Size**	525	**Size**	90	**Size**	962
Loss Of Guidance	N/A	**Loss Of Guidance**	N/A	**Loss Of Guidance**	N/A	**Loss Of Guidance**	N/A	**Loss Of Guidance**	N/A	**Loss Of Guidance**	N/A	**Loss Of Guidance**	N/A	**Loss Of Guidance**	N/A
Obstacle Avoidance	N/A	**Obstacle Avoidance**	1	**Obstacle Avoidance**	1	**Obstacle Avoidance**	1	**Obstacle Avoidance**	1	**Obstacle Avoidance**	1	**Obstacle Avoidance**	1	**Obstacle Avoidance**	1
Output	N/A	**Output**	N/A	**Output**	N/A	**Output**	N/A	**Output**	N/A	**Output**	N/A	**Output**	N/A	**Output**	N/A
END OF STEP		**END OF STEP**		**END OF STEP**		**END OF STEP**		**END OF STEP**		**END OF STEP**		**END OF STEP**		**END OF STEP**	
END MODE	N/A	**END MODE**	Distance	**END MODE**	Distance	**END MODE**	Distance	**END MODE**	Distance	**END MODE**	Distance	**END MODE**	Distance	**END MODE**	Distance
END ACTION	e Bit #11, #1	**END ACTION**	Merge	**END ACTION**	Merge	**END ACTION**	Merge	**END ACTION**	Merge	**END ACTION**	Merge	**END ACTION**	Merge	**END ACTION**	Merge
NEXT ROUTE	12	**NEXT ROUTE**	12	**NEXT ROUTE**	12	**NEXT ROUTE**	12	**NEXT ROUTE**	12	**NEXT ROUTE**	12	**NEXT ROUTE**	12	**NEXT ROUTE**	12
NEXT STEP	**2**	**NEXT STEP**	**3**	**NEXT STEP**	**4**	**NEXT STEP**	**5**	**NEXT STEP**	**6**	**NEXT STEP**	**7**	**NEXT STEP**	**8**	**NEXT STEP**	**9**

Route 12:9		Route 12:10		Route 12:11		Route 12:12		Route 12:13		Route 12:14		Route 12:15		Route 12:16	
STEP INITIATION		**STEP INITIATION**		**STEP INITIATION**		**STEP INITIATION**		**STEP INITIATION**		**STEP INITIATION**		**STEP INITIATION**		**STEP INITIATION**	
Go Mode	Auto	**Go Mode**	Auto	**Go Mode**	Auto	**Go Mode**	Auto	**Go Mode**	Auto	**Go Mode**	Auto	**Go Mode**	Auto	**Go Mode**	Auto
Radio Input	dio Input 1-	**Radio Input**	dio Input 1-	**Radio Input**	dio Input 1-	**Radio Input**	dio Input 1-	**Radio Input**	dio Input 1-	**Radio Input**	dio Input 1-	**Radio Input**	dio Input 1-	**Radio Input**	dio Input 1-
Hard Wire Input	N/A	**Hard Wire Input**	N/A	**Hard Wire Input**	N/A	**Hard Wire Input**	N/A	**Hard Wire Input**	N/A	**Hard Wire Input**	N/A	**Hard Wire Input**	N/A	**Hard Wire Input**	N/A
BIT	N/A	**BIT**	N/A	**BIT**	N/A	**BIT**	N/A	**BIT**	N/A	**BIT**	N/A	**BIT**	N/A	**BIT**	N/A
STEP ACTION		**STEP ACTION**		**STEP ACTION**		**STEP ACTION**		**STEP ACTION**		**STEP ACTION**		**STEP ACTION**		**STEP ACTION**	
Function	Rotate	**Function**	Forward	**Function**	Rotate	**Function**	Forward	**Function**	Rotate	**Function**	Forward	**Function**	Rotate	**Function**	Reverse
Speed	33	**Speed**	33	**Speed**	33	**Speed**	33	**Speed**	33	**Speed**	33	**Speed**	33	**Speed**	33
Navigation	DR	**Navigation**	DR	**Navigation**	DR	**Navigation**	DR	**Navigation**	DR	**Navigation**	DR	**Navigation**	DR	**Navigation**	DR
Direction	Center	**Direction**	Center	**Direction**	Center	**Direction**	Center	**Direction**	Center	**Direction**	Center	**Direction**	Center	**Direction**	Center
Size	-90	**Size**	2284	**Size**	90	**Size**	511	**Size**	90	**Size**	144	**Size**	-90	**Size**	62
Loss Of Guidance	N/A	**Loss Of Guidance**	N/A	**Loss Of Guidance**	N/A	**Loss Of Guidance**	N/A	**Loss Of Guidance**	N/A	**Loss Of Guidance**	N/A	**Loss Of Guidance**	N/A	**Loss Of Guidance**	N/A
Obstacle Avoidance	1	**Obstacle Avoidance**	1	**Obstacle Avoidance**	1	**Obstacle Avoidance**	1	**Obstacle Avoidance**	1	**Obstacle Avoidance**	1	**Obstacle Avoidance**	1	**Obstacle Avoidance**	1
Output	N/A	**Output**	N/A	**Output**	N/A	**Output**	N/A	**Output**	N/A	**Output**	N/A	**Output**	N/A	**Output**	#6 Pin Up
END OF STEP		**END OF STEP**		**END OF STEP**		**END OF STEP**		**END OF STEP**		**END OF STEP**		**END OF STEP**		**END OF STEP**	
END MODE	Distance	**END MODE**	Distance	**END MODE**	Distance	**END MODE**	Distance	**END MODE**	Distance	**END MODE**	Distance	**END MODE**	Distance	**END MODE**	Distance
END ACTION	Merge	**END ACTION**	Merge	**END ACTION**	Merge	**END ACTION**	Merge	**END ACTION**	Merge	**END ACTION**	Merge	**END ACTION**	Merge	**END ACTION**	Merge
NEXT ROUTE	12	**NEXT ROUTE**	12	**NEXT ROUTE**	12	**NEXT ROUTE**	12	**NEXT ROUTE**	12	**NEXT ROUTE**	12	**NEXT ROUTE**	12	**NEXT ROUTE**	12
NEXT STEP	**10**	**NEXT STEP**	**11**	**NEXT STEP**	**12**	**NEXT STEP**	**13**	**NEXT STEP**	**14**	**NEXT STEP**	**15**	**NEXT STEP**	**16**	**NEXT STEP**	**17**

Route 12:17		Route 12:18		Route 12:19		Route 12:20		Route 12:21		Route 12:22		Route 12:23		Route 12:24	
STEP INITIATION		**STEP INITIATION**		**STEP INITIATION**		**STEP INITIATION**		**STEP INITIATION**		**STEP INITIATION**		**STEP INITIATION**		**STEP INITIATION**	
Go Mode	Auto	**Go Mode**	Auto	**Go Mode**	Auto	**Go Mode**	Auto	**Go Mode**	Auto	**Go Mode**	Auto	**Go Mode**	Auto	**Go Mode**	Auto
Radio Input	dio Input 1-	**Radio Input**	dio Input 1-	**Radio Input**	dio Input 1-	**Radio Input**	dio Input 1-	**Radio Input**	dio Input 1-	**Radio Input**	dio Input 1-	**Radio Input**	dio Input 1-	**Radio Input**	dio Input 1-
Hard Wire Input	N/A	**Hard Wire Input**	N/A	**Hard Wire Input**	N/A	**Hard Wire Input**	N/A	**Hard Wire Input**	N/A	**Hard Wire Input**	N/A	**Hard Wire Input**	N/A	**Hard Wire Input**	N/A
BIT	N/A	**BIT**	N/A	**BIT**	N/A	**BIT**	N/A	**BIT**	N/A	**BIT**	N/A	**BIT**	N/A	**BIT**	N/A
STEP ACTION		**STEP ACTION**		**STEP ACTION**		**STEP ACTION**		**STEP ACTION**		**EP ACTION**		**STEP ACTION**		**STEP ACTION**	
Function	Forward	**Function**	Rotate	**Function**	Forward	**Function**	Rotate	**Function**	Forward	**Function**	Rotate	**Function**	Forward	**Function**	Rotate
Speed	33	**Speed**	33	**Speed**	33	**Speed**	33	**Speed**	33	**Speed**	33	**Speed**	33	**Speed**	33
Navigation	DR	**Navigation**	DR	**Navigation**	DR	**Navigation**	DR	**Navigation**	DR	**Navigation**	DR	**Navigation**	DR	**Navigation**	DR
Direction	Center	**Direction**	Center	**Direction**	Center	**Direction**	Center	**Direction**	Center	**Direction**	Center	**Direction**	Center	**Direction**	Center
Size	62	**Size**	-90	**Size**	144	**Size**	-90	**Size**	511	**Size**	-90	**Size**	2284	**Size**	90
Loss Of Guidance	N/A	**Loss Of Guidance**	N/A	**Loss Of Guidance**	N/A	**Loss Of Guidance**	N/A	**Loss Of Guidance**	N/A	**Loss Of Guidance**	N/A	**Loss Of Guidance**	N/A	**Loss Of Guidance**	N/A
Obstacle Avoidance	1	**Obstacle Avoidance**	1	**Obstacle Avoidance**	1	**Obstacle Avoidance**	1	**Obstacle Avoidance**	1	**Obstacle Avoidance**	1	**Obstacle Avoidance**	1	**Obstacle Avoidance**	1
Output	N/A	**Output**	N/A	**Output**	N/A	**Output**	N/A	**Output**	N/A	**Output**	N/A	**Output**	N/A	**Output**	N/A
END OF STEP		**END OF STEP**		**END OF STEP**		**END OF STEP**		**END OF STEP**		**ID OF STEP**		**END OF STEP**		**END OF STEP**	
END MODE	Distance	**END MODE**	Distance	**END MODE**	Distance	**END MODE**	Distance	**END MODE**	Distance	**END MODE**	Distance	**END MODE**	Distance	**END MODE**	Distance
END ACTION	Merge	**END ACTION**	Merge	**END ACTION**	Merge	**END ACTION**	Merge	**END ACTION**	Merge	**END ACTION**	Merge	**END ACTION**	Merge	**END ACTION**	Merge
NEXT ROUTE	12	**NEXT ROUTE**	12	**NEXT ROUTE**	12	**NEXT ROUTE**	12	**NEXT ROUTE**	12	**NEXT ROUTE**	12	**NEXT ROUTE**	12	**NEXT ROUTE**	12
NEXT STEP	**18**	**NEXT STEP**	**19**	**NEXT STEP**	**20**	**NEXT STEP**	**21**	**NEXT STEP**	**22**	**NEXT STEP**	**23**	**NEXT STEP**	**24**	**NEXT STEP**	**25**

Route 12:25		Route 12:26		Route 12:27		Route 12:28		Route 12:29		Route 12:30		Route 12:31		Route 12:32	
STEP INITIATION		**STEP INITIATION**		**STEP INITIATION**		**STEP INITIATION**		**STEP INITIATION**		**STEP INITIATION**		**STEP INITIATION**		**STEP INITIATION**	
Go Mode	Auto	**Go Mode**	Auto	**Go Mode**	Auto	**Go Mode**	Auto	**Go Mode**	Auto	**Go Mode**	Auto	**Go Mode**	Auto	**Go Mode**	Auto
Radio Input	dio Input 1-	**Radio Input**	dio Input 1-	**Radio Input**	dio Input 1-	**Radio Input**	dio Input 1-	**Radio Input**	dio Input 1-	**Radio Input**	dio Input 1-	**Radio Input**	dio Input 1-	**Radio Input**	dio Input 1-
Hard Wire Input	N/A	**Hard Wire Input**	N/A	**Hard Wire Input**	N/A	**Hard Wire Input**	N/A	**Hard Wire Input**	N/A	**Hard Wire Input**	N/A	**Hard Wire Input**	N/A	**Hard Wire Input**	Cart prese
BIT	N/A	**BIT**	N/A	**BIT**	N/A	**BIT**	N/A	**BIT**	N/A	**BIT**	N/A	**BIT**	N/A	**BIT**	N/A
STEP ACTION		**STEP ACTION**		**STEP ACTION**		**STEP ACTION**		**STEP ACTION**		**STEP ACTION**		**STEP ACTION**		**STEP ACTION**	
Function	Forward	**Function**	Rotate	**Function**	Reverse	**Function**	Delay	**Function**	Forward	**Function**	Rotate	**Function**	Reverse	**Function**	Forward
Speed	33	**Speed**	33	**Speed**	33	**Speed**	33	**Speed**	33	**Speed**	33	**Speed**	33	**Speed**	33
Navigation	DR	**Navigation**	DR	**Navigation**	DR	**Navigation**	DR	**Navigation**	DR	**Navigation**	DR	**Navigation**	DR	**Navigation**	DR
Direction	Center	**Direction**	Center	**Direction**	Center	**Direction**	Center	**Direction**	Center	**Direction**	Center	**Direction**	Center	**Direction**	Center
Size	1240	**Size**	90	**Size**	279	**Size**	5	**Size**	104	**Size**	-90	**Size**	102	**Size**	102
Loss Of Guidance	N/A	**Loss Of Guidance**	N/A	**Loss Of Guidance**	N/A	**Loss Of Guidance**	N/A	**Loss Of Guidance**	N/A	**Loss Of Guidance**	N/A	**Loss Of Guidance**	N/A	**Loss Of Guidance**	N/A
Obstacle Avoidance	1	**Obstacle Avoidance**	1	**Obstacle Avoidance**	1	**Obstacle Avoidance**	1	**Obstacle Avoidance**	1	**Obstacle Avoidance**	1	**Obstacle Avoidance**	1	**Obstacle Avoidance**	1
Output	N/A	**Output**	N/A	**Output**	N/A	**Output**	#7 Pin Drop	**Output**		**Output**		**Output**	#6 pin up	**Output**	N/a
END OF STEP		**END OF STEP**		**END OF STEP**		**END OF STEP**		**END OF STEP**		**END OF STEP**		**END OF STEP**		**END OF STEP**	
END MODE	Distance	**END MODE**	Distance	**END MODE**	Distance	**END MODE**	time	**END MODE**	Distance	**END MODE**	Distance	**END MODE**	Distance	**END MODE**	Distance
END ACTION	Merge	**END ACTION**	Merge	**END ACTION**	Merge	**END ACTION**	Merge	**END ACTION**	Merge	**END ACTION**	Merge	**END ACTION**	Merge	**END ACTION**	Merge
NEXT ROUTE	12	**NEXT ROUTE**	12	**NEXT ROUTE**	12	**NEXT ROUTE**	12	**NEXT ROUTE**	12	**NEXT ROUTE**	12	**NEXT ROUTE**	12	**NEXT ROUTE**	12
NEXT STEP	**26**	**NEXT STEP**	**27**	**NEXT STEP**	**28**	**NEXT STEP**	**29**	**NEXT STEP**	**30**	**NEXT STEP**	**31**	**NEXT STEP**	**32**	**NEXT STEP**	**33**

Route 12:33		Route 12:34		Route 12:35		Route 12:36		Route 12:37		Route 12:38		Route 12:39		Route 12:40	
STEP INITIATION		STEP INITIATION		STEP INITIATION		STEP INITIATION		STEP INITIATION		STEP INITIATION		STEP INITIATION		STEP INITIATION	
Go Mode	Auto	Go Mode	Auto	Go Mode	Auto	Go Mode	Auto	Go Mode	Auto	Go Mode	Auto	Go Mode	Auto	Go Mode	Auto
Radio Input	dio Input 1	Radio Input	dio Input 1	Radio Input	dio Input 1	Radio Input	dio Input 1	Radio Input	dio Input 1	Radio Input	dio Input 1	Radio Input	dio Input 1	Radio Input	dio Input 1
Hard Wire Input	N/A	Hard Wire Input	N/A	Hard Wire Input	N/A	Hard Wire Input	N/A	Hard Wire Input	N/A	Hard Wire Input	N/A	Hard Wire Input	N/A	Hard Wire Input	N/A
BIT	N/A	BIT	N/A	BIT	N/A	BIT	N/A	BIT	N/A	BIT	N/A	BIT	N/A	BIT	N/A
STEP ACTION		STEP ACTION		STEP ACTION		STEP ACTION		STEP ACTION		STEP ACTION		STEP ACTION		STEP ACTION	
Function	Rotate	Function	Reverse	Function	Delay	Function	Forward	Function	Rotate	Function	Reverse	Function	Forward	Function	Rotate
Speed	33	Speed	33	Speed	33	Speed	33	Speed	33	Speed	33	Speed	33	Speed	33
Navigation	DR	Navigation	DR	Navigation	DR	Navigation	DR	Navigation	DR	Navigation	DR	Navigation	DR	Navigation	DR
Direction	Center	Direction	Center	Direction	Center	Direction	Center	Direction	Center	Direction	Center	Direction	Center	Direction	Center
Size	45	Size	99	Size	5	Size	99	Size	45	Size	104	Size	104	Size	-90
Loss Of Guidance	N/A	Loss Of Guidance	N/A	Loss Of Guidance	N/A	Loss Of Guidance	N/A	Loss Of Guidance	N/A	Loss Of Guidance	N/A	Loss Of Guidance	N/A	Loss Of Guidance	N/A
Obstacle Avoidance	1	Obstacle Avoidance	1	Obstacle Avoidance	1	Obstacle Avoidance	1	Obstacle Avoidance	1	Obstacle Avoidance	1	Obstacle Avoidance	1	Obstacle Avoidance	1
Output	N/a	Output	N/a	Output	#7 pin drop	Output	N/a	Output	N/a	Output	#7 pin raise	Output	N/A	Output	N/A
END OF STEP		END OF STEP		END OF STEP		END OF STEP		END OF STEP		END OF STEP		END OF STEP		END OF STEP	
END MODE	Distance	END MODE	Distance	END MODE	time	END MODE	Distance	END MODE	Distance	END MODE	Distance	END MODE	Distance	END MODE	Distance
END ACTION	Merge	END ACTION	Merge	END ACTION	Merge	END ACTION	Merge	END ACTION	Merge	END ACTION	Merge	END ACTION	Merge	END ACTION	Merge
NEXT ROUTE	12	NEXT ROUTE	12	NEXT ROUTE	12	NEXT ROUTE	12	NEXT ROUTE	12	NEXT ROUTE	12	NEXT ROUTE	12	NEXT ROUTE	12
NEXT STEP	34	NEXT STEP	35	NEXT STEP	36	NEXT STEP	37	NEXT STEP	38	NEXT STEP	39	NEXT STEP	40	NEXT STEP	41

Route 12:41		Route 12:42		Route 12:43		Route 12:44		Route 12:45		Route 12:46		Route 12:47		Route 12:48	
STEP INITIATION		STEP INITIATION		STEP INITIATION		STEP INITIATION		STEP INITIATION		STEP INITIATION		STEP INITIATION		STEP INITIATION	
Go Mode	Auto	Go Mode	Auto	Go Mode	Auto	Go Mode	Auto	Go Mode	Auto	Go Mode	Auto	Go Mode	Auto	Go Mode	Auto
Radio Input	dio Input 1	Radio Input	dio Input 1	Radio Input	dio Input 1	Radio Input	dio Input 1	Radio Input	dio Input 1	Radio Input	dio Input 1	Radio Input	dio Input 1	Radio Input	dio Input 1
Hard Wire Input	N/A	Hard Wire Input	N/A	Hard Wire Input	N/A	Hard Wire Input	N/A	Hard Wire Input	N/A	Hard Wire Input	Cart Prese	Hard Wire Input		Hard Wire Input	
BIT	N/A	BIT	N/A	BIT	N/A	BIT	N/A	BIT	N/A	BIT	N/A	BIT	N/A	BIT	N/A
STEP ACTION		STEP ACTION		STEP ACTION		STEP ACTION		STEP ACTION		STEP ACTION		STEP ACTION		STEP ACTION	
Function	Reverse	Function	Delay	Function	Forward	Function	Rotate	Function	Reverse	Function	Forward	Function	Rotate	Function	Forward
Speed	33	Speed	33	Speed	33	Speed	33	Speed	33	Speed	33	Speed	33	Speed	33
Navigation	DR	Navigation	DR	Navigation	DR	Navigation	DR	Navigation	DR	Navigation	DR	Navigation	DR	Navigation	DR
Direction	Center	Direction	Center	Direction	Center	Direction	Center	Direction	Center	Direction	Center	Direction	Center	Direction	Center
Size	102	Size	5	Size	102	Size	45	Size	99	Size	99	Size	45	Size	174
Loss Of Guidance	N/A	Loss Of Guidance	N/A	Loss Of Guidance	N/A	Loss Of Guidance	N/A	Loss Of Guidance	N/A	Loss Of Guidance	N/A	Loss Of Guidance	N/A	Loss Of Guidance	N/A
Obstacle Avoidance	1	Obstacle Avoidance	1	Obstacle Avoidance	1	Obstacle Avoidance	1	Obstacle Avoidance	1	Obstacle Avoidance	1	Obstacle Avoidance	1	Obstacle Avoidance	1
Output	N/A	Output	#7 Pin Drop	Output	N/a	Output	N/a	Output	#6 Pin Raise	Output	N/a	Output	N/a	Output	N/a
END OF STEP		END OF STEP		END OF STEP		END OF STEP		END OF STEP		END OF STEP		END OF STEP		END OF STEP	
END MODE	Distance	END MODE	Time	END MODE	Distance	END MODE	Distance	END MODE	Distance	END MODE	Distance	END MODE	Distance	END MODE	Distance
END ACTION	Merge	END ACTION	Merge	END ACTION	Merge	END ACTION	Merge	END ACTION	Merge	END ACTION	Merge	END ACTION	Merge	END ACTION	Merge
NEXT ROUTE	12	NEXT ROUTE	12	NEXT ROUTE	12	NEXT ROUTE	12	NEXT ROUTE	12	NEXT ROUTE	12	NEXT ROUTE	12	NEXT ROUTE	12
NEXT STEP	42	NEXT STEP	43	NEXT STEP	44	NEXT STEP	45	NEXT STEP	46	NEXT STEP	47	NEXT STEP	48	NEXT STEP	49

Route 12:49		Route 12:50		Route 12:51		Route 12:52		Route 12:53		Route 12:54		Route 12:55		Route 12:56	
STEP INITIATION		STEP INITIATION		STEP INITIATION		STEP INITIATION		STEP INITIATION		STEP INITIATION		STEP INITIATION		STEP INITIATION	
Go Mode	Auto	Go Mode	Auto	Go Mode	Auto	Go Mode	Auto	Go Mode	Auto	Go Mode	Auto	Go Mode	Auto	Go Mode	Auto
Radio Input	dio Input 1	Radio Input	dio Input 1	Radio Input	dio Input 1	Radio Input	dio Input 1	Radio Input	dio Input 1	Radio Input	dio Input 1	Radio Input	dio Input 1	Radio Input	dio Input 1
Hard Wire Input		Hard Wire Input		Hard Wire Input		Hard Wire Input		Hard Wire Input		Hard Wire Input		Hard Wire Input		Hard Wire Input	
BIT	N/A	BIT	N/A	BIT	N/A	BIT	N/A	BIT	N/A	BIT	N/A	BIT	N/A	BIT	N/A
STEP ACTION		STEP ACTION		STEP ACTION		STEP ACTION		STEP ACTION		STEP ACTION		STEP ACTION		STEP ACTION	
Function	Rotate	Function	Forward	Function	Rotate	Function	Forward	Function	Rotate	Function	Forward	Function	Rotate	Function	Forward
Speed	33	Speed	33	Speed	33	Speed	33	Speed	33	Speed	33	Speed	33	Speed	33
Navigation	DR	Navigation	DR	Navigation	DR	Navigation	DR	Navigation	DR	Navigation	DR	Navigation	DR	Navigation	DR
Direction	Center	Direction	Center	Direction	Center	Direction	Center	Direction	Center	Direction	Center	Direction	Center	Direction	Center
Size	90	Size	1240	Size	-90	Size	2284	Size	90	Size	511	Size	90	Size	144
Loss Of Guidance	N/A	Loss Of Guidance	N/A	Loss Of Guidance	N/A	Loss Of Guidance	N/A	Loss Of Guidance	N/A	Loss Of Guidance	N/A	Loss Of Guidance	N/A	Loss Of Guidance	N/A
Obstacle Avoidance	1	Obstacle Avoidance	1	Obstacle Avoidance	1	Obstacle Avoidance	1	Obstacle Avoidance	1	Obstacle Avoidance	1	Obstacle Avoidance	1	Obstacle Avoidance	1
Output	N/a	Output	N/a	Output	N/a	Output	N/a	Output	N/a	Output	N/a	Output	N/a	Output	N/a
END OF STEP		END OF STEP		END OF STEP		END OF STEP		END OF STEP		END OF STEP		END OF STEP		END OF STEP	
END MODE	Distance	END MODE	Distance	END MODE	Distance	END MODE	Distance	END MODE	Distance	END MODE	Distance	END MODE	Distance	END MODE	Distance
END ACTION	Merge	END ACTION	Merge	END ACTION	Merge	END ACTION	Merge	END ACTION	Merge	END ACTION	Merge	END ACTION	Merge	END ACTION	Merge
NEXT ROUTE	12	NEXT ROUTE	12	NEXT ROUTE	12	NEXT ROUTE	12	NEXT ROUTE	12	NEXT ROUTE	12	NEXT ROUTE	12	NEXT ROUTE	12
NEXT STEP	50	NEXT STEP	51	NEXT STEP	52	NEXT STEP	53	NEXT STEP	54	NEXT STEP	55	NEXT STEP	56	NEXT STEP	57

Route 12:57		Route 12:58		Route 12:59		Route 12:60		Route 12:61		Route 12:62		Route 12:63		Route 12:64	
STEP INITIATION		STEP INITIATION		STEP INITIATION		STEP INITIATION		STEP INITIATION		STEP INITIATION		STEP INITIATION		STEP INITIATION	
Go Mode	Auto	Go Mode	Auto	Go Mode	Auto	Go Mode	Auto	Go Mode	Auto	Go Mode	Auto	Go Mode	Auto	Go Mode	Auto
Radio Input	dio Input 1	Radio Input	dio Input 1	Radio Input	dio Input 1	Radio Input	dio Input 1	Radio Input	dio Input 1	Radio Input	dio Input 1	Radio Input	dio Input 1	Radio Input	dio Input 1
Hard Wire Input		Hard Wire Input		Hard Wire Input		Hard Wire Input		Hard Wire Input		Hard Wire Input		Hard Wire Input		Hard Wire Input	
BIT	N/A	BIT	N/A	BIT	N/A	BIT	N/A	BIT	N/A	BIT	N/A	BIT	N/A	BIT	N/A
STEP ACTION		STEP ACTION		STEP ACTION		STEP ACTION		STEP ACTION		STEP ACTION		STEP ACTION		STEP ACTION	
Function	Rotate	Function	Reverse	Function	Dellay	Function	Forward	Function	Rotate	Function	Forward	Function	Rotate	Function	Forward
Speed	33	Speed	33	Speed	33	Speed	33	Speed	33	Speed	33	Speed	33	Speed	33
Navigation	DR	Navigation	DR	Navigation	DR	Navigation	DR	Navigation	DR	Navigation	DR	Navigation	DR	Navigation	DR
Direction	Center	Direction	Center	Direction	Center	Direction	Center	Direction	Center	Direction	Center	Direction	Center	Direction	Center
Size	-90	Size	62	Size	5	Size	62	Size	-90	Size	144	Size	-90	Size	511
Loss Of Guidance	N/A	Loss Of Guidance	N/A	Loss Of Guidance	N/A	Loss Of Guidance	N/A	Loss Of Guidance	N/A	Loss Of Guidance	N/A	Loss Of Guidance	N/A	Loss Of Guidance	N/A
Obstacle Avoidance	1	Obstacle Avoidance	1	Obstacle Avoidance	1	Obstacle Avoidance	1	Obstacle Avoidance	1	Obstacle Avoidance	1	Obstacle Avoidance	1	Obstacle Avoidance	1
Output	N/a	Output	N/a	Output	#7 Pin Drop	Output		Output		Output		Output		Output	
END OF STEP		END OF STEP		END OF STEP		END OF STEP		END OF STEP		END OF STEP		END OF STEP		END OF STEP	
END MODE	Distance	END MODE	Distance	END MODE	time	END MODE	Distance	END MODE	Distance	END MODE	Distance	END MODE	Distance	END MODE	Distance
END ACTION	Merge	END ACTION	Merge	END ACTION	Merge	END ACTION	Merge	END ACTION	Merge	END ACTION	Merge	END ACTION	Merge	END ACTION	Merge
NEXT ROUTE	12	NEXT ROUTE	12	NEXT ROUTE	12	NEXT ROUTE	12	NEXT ROUTE	12	NEXT ROUTE	12	NEXT ROUTE	12	NEXT ROUTE	12
NEXT STEP	58	NEXT STEP	59	NEXT STEP	60	NEXT STEP	61	NEXT STEP	62	NEXT STEP	63	NEXT STEP	64	NEXT STEP	65

Route 12:65		Route 12:66		Route 12:67		Route 12:68		Route 12:69		Route 12:70		Route 12:71		Route 12:72	
STEP INITIATION		**STEP INITIATION**		**STEP INITIATION**		**STEP INITIATION**		**STEP INITIATION**		**STEP INITIATION**		**STEP INITIATION**		**STEP INITIATION**	
Go Mode	Auto	**Go Mode**	Auto	**Go Mode**	Auto	**Go Mode**	Auto	**Go Mode**	Auto	**Go Mode**	Auto	**Go Mode**	Auto	**Go Mode**	Auto
Radio Input	dio Input 1-	**Radio Input**	dio Input 1-	**Radio Input**	dio Input 1-	**Radio Input**	dio Input 1-	**Radio Input**	dio Input 1-	**Radio Input**	dio Input 1-	**Radio Input**	dio Input 1-	**Radio Input**	dio Input 1-
Hard Wire Input		**Hard Wire Input**		**Hard Wire Input**	N/a	**Hard Wire Input**	N/a	**Hard Wire Input**	N/a	**Hard Wire Input**	N/a	**Hard Wire Input**	N/a	**Hard Wire Input**	N/a
BIT	N/A	**BIT**	N/A	**BIT**	N/A	**BIT**	N/A	**BIT**	N/A	**BIT**	N/A	**BIT**	N/A	**BIT**	N/A
STEP ACTION		**STEP ACTION**		**STEP ACTION**		**STEP ACTION**		**STEP ACTION**		**STEP ACTION**		**STEP ACTION**		**STEP ACTION**	
Function	Rotate	**Function**	Forward	**Function**	Rotate	**Function**	Forward	**Function**	Rotate	**Function**	Forward	**Function**	Rotate	**Function**	Forward
Speed	33	**Speed**	33	**Speed**	33	**Speed**	33	**Speed**	33	**Speed**	33	**Speed**	33	**Speed**	33
Navigation	DR	**Navigation**	DR	**Navigation**	DR	**Navigation**	DR	**Navigation**	DR	**Navigation**	DR	**Navigation**	DR	**Navigation**	DR
Direction	Center	**Direction**	Center	**Direction**	Center	**Direction**	Center	**Direction**	Center	**Direction**	Center	**Direction**	Center	**Direction**	Center
Size	-90	**Size**	2284	**Size**	90	**Size**	962	**Size**	-90	**Size**	525	**Size**	90	**Size**	417
Loss Of Guidance	N/A	**Loss Of Guidance**	N/A	**Loss Of Guidance**	N/A	**Loss Of Guidance**	N/A	**Loss Of Guidance**	N/A	**Loss Of Guidance**	N/A	**Loss Of Guidance**	N/A	**Loss Of Guidance**	N/A
Obstacle Avoidance	1	**Obstacle Avoidance**	1	**Obstacle Avoidance**	1	**Obstacle Avoidance**	1	**Obstacle Avoidance**	1	**Obstacle Avoidance**	1	**Obstacle Avoidance**	1	**Obstacle Avoidance**	1
Output		**Output**		**Output**	N/a	**Output**	N/a	**Output**	N/a	**Output**	N/a	**Output**	N/a	**Output**	N/a
END OF STEP		**END OF STEP**		**END OF STEP**		**END OF STEP**		**END OF STEP**		**END OF STEP**		**END OF STEP**		**END OF STEP**	
END MODE	Distance	**END MODE**	Distance	**END MODE**	Distance	**END MODE**	Distance	**END MODE**	Distance	**END MODE**	Distance	**END MODE**	Distance	**END MODE**	Distance
END ACTION	Merge	**END ACTION**	Merge	**END ACTION**	Merge	**END ACTION**	Merge	**END ACTION**	Merge	**END ACTION**	Merge	**END ACTION**	Merge	**END ACTION**	Merge
NEXT ROUTE	12	**NEXT ROUTE**	12	**NEXT ROUTE**	12	**NEXT ROUTE**	12	**NEXT ROUTE**	12	**NEXT ROUTE**	12	**NEXT ROUTE**	12	**NEXT ROUTE**	12
NEXT STEP	**66**	**NEXT STEP**	**67**	**NEXT STEP**	**68**	**NEXT STEP**	**69**	**NEXT STEP**	**70**	**NEXT STEP**	**71**	**NEXT STEP**	**72**	**NEXT STEP**	**73**

Route 12:73		Route 12:74		Route 0: 1	
STEP INITIATION		**STEP INITIATION**		**STEP INITIATION**	
Go Mode	Auto	**Go Mode**	Auto	**Go Mode**	nput Trigge
Radio Input	dio Input 1-	**Radio Input**	dio Input 1-	**Radio Input**	dio Input 1-
Hard Wire Input	N/a	**Hard Wire Input**	N/a	**Hard Wire Input**	N/a
BIT	N/A	**BIT**	N/A	**BIT**	BIT #1-#24
STEP ACTION		**STEP ACTION**		**STEP ACTION**	
Function	Rotate	**Function**	Reverse	**Function**	Auto
Speed	33	**Speed**	33	**Speed**	33
Navigation	DR	**Navigation**	DR	**Navigation**	DR
Direction	Center	**Direction**	Center	**Direction**	Center
Size	-90	**Size**	66	**Size**	66
Loss Of Guidance	N/A	**Loss Of Guidance**	N/A	**Loss Of Guidance**	N/A
Obstacle Avoidance	1	**Obstacle Avoidance**	1	**Obstacle Avoidance**	1
Output	N/a	**Output**	N/a	**Output**	N/a
END OF STEP		**END OF STEP**		**END OF STEP**	
END MODE	Distance	**END MODE**	Distance	**END MODE**	Distance
END ACTION	Merge	**END ACTION**	Merge	**END ACTION**	Merge
NEXT ROUTE	12	**NEXT ROUTE**	0	**NEXT ROUTE**	0
NEXT STEP	**74**	**NEXT STEP**	1	**NEXT STEP**	1

Tier 3 Route 13

Route 13:1		Route 13:2		Route 13:3		Route 13:4		Route 13:5		Route 13:6		Route 13:7		Route 13:8	
STEP INITIATION		STEP INITIATION		STEP INITIATION		STEP INITIATION		STEP INITIATION		STEP INITIATION		STEP INITIATION		STEP INITIATION	
Go Mode	nput Triggers	Go Mode	Auto	Go Mode	Auto	Go Mode	Auto	Go Mode	Auto	Go Mode	Auto	Go Mode	Auto	Go Mode	Auto
Radio Input	adio Input 1-2	Radio Input	dio Input 1-	Radio Input	dio Input 1-	Radio Input	dio Input 1-	Radio Input	dio Input 1-	Radio Input	dio Input 1-	Radio Input	dio Input 1-	Radio Input	dio Input 1-
Hard Wire Input	N/A	Hard Wire Input	N/A	Hard Wire Input	N/A	Hard Wire Input	N/A	Hard Wire Input	N/A	Hard Wire Input	N/A	Hard Wire Input	N/A	Hard Wire Input	N/A
BIT	Bit #1 off	BIT	N/A	BIT	N/A	BIT	N/A	BIT	N/A	BIT	N/A	BIT	N/A	BIT	N/A
Bit#11 On, #20 On	it #5 and 6 Off														
Home Position RFID	it #7 and 9 of														
	t #8 and 10 o														
STEP ACTION		STEP ACTION		STEP ACTION		STEP ACTION		STEP ACTION		STEP ACTION		STEP ACTION		STEP ACTION	
Function	Dispatch	Function	Forward	Function	Rotate	Function	Forward	Function	Rotate	Function	Forward	Function	Rotate	Function	Forward
Speed	N/A	Speed	33	Speed	33	Speed	33	Speed	33	Speed	33	Speed	33	Speed	33
Navigation	N/A	Navigation	DR	Navigation	DR	Navigation	DR	Navigation	DR	Navigation	DR	Navigation	DR	Navigation	DR
Direction	N/A	Direction	Center	Direction	Center	Direction	Center	Direction	Center	Direction	Center	Direction	Center	Direction	Center
Size	N/A	Size	66	Size	-90	Size	417	Size	-90	Size	525	Size	90	Size	962
Loss Of Guidance	N/A	Loss Of Guidance	N/A	Loss Of Guidance	N/A	Loss Of Guidance	N/A	Loss Of Guidance	N/A	Loss Of Guidance	N/A	Loss Of Guidance	N/A	Loss Of Guidance	N/A
Obstacle Avoidance	N/A	Obstacle Avoidance	1	Obstacle Avoidance	1	Obstacle Avoidance	1	Obstacle Avoidance	1	Obstacle Avoidance	1	Obstacle Avoidance	1	Obstacle Avoidance	1
Output	N/A	Output	N/A	Output	N/A	Output	N/A	Output	N/A	Output	N/A	Output	N/A	Output	N/A
END OF STEP		END OF STEP		END OF STEP		END OF STEP		END OF STEP		END OF STEP		END OF STEP		END OF STEP	
END MODE	N/A	END MODE	Distance	END MODE	Distance	END MODE	Distance	END MODE	Distance	END MODE	Distance	END MODE	Distance	END MODE	Distance
END ACTION	e Bit #11, #2	END ACTION	Merge	END ACTION	Merge	END ACTION	Merge	END ACTION	Merge	END ACTION	Merge	END ACTION	Merge	END ACTION	Merge
NEXT ROUTE	13	NEXT ROUTE	13	NEXT ROUTE	13	NEXT ROUTE	13	NEXT ROUTE	13	NEXT ROUTE	13	NEXT ROUTE	13	NEXT ROUTE	13
NEXT STEP	2	NEXT STEP	3	NEXT STEP	4	NEXT STEP	5	NEXT STEP	6	NEXT STEP	7	NEXT STEP	8	NEXT STEP	9

Route 13:9		Route 13:10		Route 13:11		Route 13:12		Route 13:13		Route 13:14		Route 13:15		Route 13:16	
STEP INITIATION		STEP INITIATION		STEP INITIATION		STEP INITIATION		STEP INITIATION		STEP INITIATION		STEP INITIATION		STEP INITIATION	
Go Mode	Auto	Go Mode	Auto	Go Mode	Auto	Go Mode	Auto	Go Mode	Auto	Go Mode	Auto	Go Mode	Auto	Go Mode	Auto
Radio Input	dio Input 1-	Radio Input	dio Input 1-	Radio Input	dio Input 1-	Radio Input	dio Input 1-	Radio Input	dio Input 1-	Radio Input	dio Input 1-	Radio Input	dio Input 1-	Radio Input	dio Input 1-
Hard Wire Input	N/A	Hard Wire Input	N/A	Hard Wire Input	N/A	Hard Wire Input	N/A	Hard Wire Input	N/A	Hard Wire Input	N/A	Hard Wire Input	N/A	Hard Wire Input	N/A
BIT	N/A	BIT	N/A	BIT	N/A	BIT	N/A	BIT	N/A	BIT	N/A	BIT	N/A	BIT	N/A
STEP ACTION		STEP ACTION		STEP ACTION		STEP ACTION		STEP ACTION		STEP ACTION		STEP ACTION		STEP ACTION	
Function	Rotate	Function	Forward	Function	Rotate	Function	Forward	Function	Rotate	Function	Forward	Function	Rotate	Function	Reverse
Speed	33	Speed	33	Speed	33	Speed	33	Speed	33	Speed	33	Speed	33	Speed	33
Navigation	DR	Navigation	DR	Navigation	DR	Navigation	DR	Navigation	DR	Navigation	DR	Navigation	DR	Navigation	DR
Direction	Center	Direction	Center	Direction	Center	Direction	Center	Direction	Center	Direction	Center	Direction	Center	Direction	Center
Size	-90	Size	2284	Size	90	Size	511	Size	90	Size	208	Size	-90	Size	62
Loss Of Guidance	N/A	Loss Of Guidance	N/A	Loss Of Guidance	N/A	Loss Of Guidance	N/A	Loss Of Guidance	N/A	Loss Of Guidance	N/A	Loss Of Guidance	N/A	Loss Of Guidance	N/A
Obstacle Avoidance	1	Obstacle Avoidance	1	Obstacle Avoidance	1	Obstacle Avoidance	1	Obstacle Avoidance	1	Obstacle Avoidance	1	Obstacle Avoidance	1	Obstacle Avoidance	1
Output	N/A	Output	N/A	Output	N/A	Output	N/A	Output	N/A	Output	N/A	Output	N/A	Output	#6 Pin Up
END OF STEP		END OF STEP		END OF STEP		END OF STEP		END OF STEP		END OF STEP		END OF STEP		END OF STEP	
END MODE	Distance	END MODE	Distance	END MODE	Distance	END MODE	Distance	END MODE	Distance	END MODE	Distance	END MODE	Distance	END MODE	Distance
END ACTION	Merge	END ACTION	Merge	END ACTION	Merge	END ACTION	Merge	END ACTION	Merge	END ACTION	Merge	END ACTION	Merge	END ACTION	Merge
NEXT ROUTE	13	NEXT ROUTE	13	NEXT ROUTE	13	NEXT ROUTE	13	NEXT ROUTE	13	NEXT ROUTE	13	NEXT ROUTE	13	NEXT ROUTE	13
NEXT STEP	10	NEXT STEP	11	NEXT STEP	12	NEXT STEP	13	NEXT STEP	14	NEXT STEP	15	NEXT STEP	16	NEXT STEP	17

Route 13:17		Route 13:18		Route 13:19		Route 13:20		Route 13:21		Route 13:22		Route 13:23		Route 13:24	
STEP INITIATION		STEP INITIATION		STEP INITIATION		STEP INITIATION		STEP INITIATION		STEP INITIATION		STEP INITIATION		STEP INITIATION	
Go Mode	Auto	Go Mode	Auto	Go Mode	Auto	Go Mode	Auto	Go Mode	Auto	Go Mode	Auto	Go Mode	Auto	Go Mode	Auto
Radio Input	dio Input 1-	Radio Input	dio Input 1-	Radio Input	dio Input 1-	Radio Input	dio Input 1-	Radio Input	dio Input 1-	Radio Input	dio Input 1-	Radio Input	dio Input 1-	Radio Input	dio Input 1-
Hard Wire Input	N/A	Hard Wire Input	N/A	Hard Wire Input	N/A	Hard Wire Input	N/A	Hard Wire Input	N/A	Hard Wire Input	N/A	Hard Wire Input	N/A	Hard Wire Input	N/A
BIT	N/A	BIT	N/A	BIT	N/A	BIT	N/A	BIT	N/A	BIT	N/A	BIT	N/A	BIT	N/A
STEP ACTION		STEP ACTION		STEP ACTION		STEP ACTION		STEP ACTION		EP ACTION		STEP ACTION		STEP ACTION	
Function	Forward	Function	Rotate	Function	Forward	Function	Rotate	Function	Forward	Function	Rotate	Function	Forward	Function	Rotate
Speed	33	Speed	33	Speed	33	Speed	33	Speed	33	Speed	33	Speed	33	Speed	33
Navigation	DR	Navigation	DR	Navigation	DR	Navigation	DR	Navigation	DR	Navigation	DR	Navigation	DR	Navigation	DR
Direction	Center	Direction	Center	Direction	Center	Direction	Center	Direction	Center	Direction	Center	Direction	Center	Direction	Center
Size	62	Size	-90	Size	208	Size	-90	Size	511	Size	-90	Size	2284	Size	90
Loss Of Guidance	N/A	Loss Of Guidance	N/A	Loss Of Guidance	N/A	Loss Of Guidance	N/A	Loss Of Guidance	N/A	Loss Of Guidance	N/A	Loss Of Guidance	N/A	Loss Of Guidance	N/A
Obstacle Avoidance	1	Obstacle Avoidance	1	Obstacle Avoidance	1	Obstacle Avoidance	1	Obstacle Avoidance	1	Obstacle Avoidance	1	Obstacle Avoidance	1	Obstacle Avoidance	1
Output	N/A	Output	N/A	Output	N/A	Output	N/A	Output	N/A	Output	N/A	Output	N/A	Output	N/A
END OF STEP		END OF STEP		END OF STEP		END OF STEP		END OF STEP		ID OF STEP		END OF STEP		END OF STEP	
END MODE	Distance	END MODE	Distance	END MODE	Distance	END MODE	Distance	END MODE	Distance	END MODE	Distance	END MODE	Distance	END MODE	Distance
END ACTION	Merge	END ACTION	Merge	END ACTION	Merge	END ACTION	Merge	END ACTION	Merge	END ACTION	Merge	END ACTION	Merge	END ACTION	Merge
NEXT ROUTE	13	NEXT ROUTE	13	NEXT ROUTE	13	NEXT ROUTE	13	NEXT ROUTE	13	NEXT ROUTE	13	NEXT ROUTE	13	NEXT ROUTE	13
NEXT STEP	18	NEXT STEP	19	NEXT STEP	20	NEXT STEP	21	NEXT STEP	22	NEXT STEP	23	NEXT STEP	24	NEXT STEP	25

Route 13:25		Route 13:26		Route 13:27		Route 13:28		Route 13:29		Route 13:30		Route 13:31		Route 13:32	
STEP INITIATION		STEP INITIATION		STEP INITIATION		STEP INITIATION		STEP INITIATION		STEP INITIATION		STEP INITIATION		STEP INITIATION	
Go Mode	Auto	Go Mode	Auto	Go Mode	Auto	Go Mode	Auto	Go Mode	Auto	Go Mode	Auto	Go Mode	Auto	Go Mode	Auto
Radio Input	dio Input 1-	Radio Input	dio Input 1-	Radio Input	dio Input 1-	Radio Input	dio Input 1-	Radio Input	dio Input 1-	Radio Input	dio Input 1-	Radio Input	dio Input 1-	Radio Input	dio Input 1-
Hard Wire Input	N/A	Hard Wire Input	N/A	Hard Wire Input	N/A	Hard Wire Input	N/A	Hard Wire Input	N/A	Hard Wire Input	N/A	Hard Wire Input	N/A	Hard Wire Input	Cart prese
BIT	N/A	BIT	N/A	BIT	N/A	BIT	N/A	BIT	N/A	BIT	N/A	BIT	N/A	BIT	N/A
STEP ACTION		STEP ACTION		STEP ACTION		STEP ACTION		STEP ACTION		STEP ACTION		STEP ACTION		STEP ACTION	
Function	Forward	Function	Rotate	Function	Reverse	Function	Delay	Function	Forward	Function	Rotate	Function	Reverse	Function	Forward
Speed	33	Speed	33	Speed	33	Speed	33	Speed	33	Speed	33	Speed	33	Speed	33
Navigation	DR	Navigation	DR	Navigation	DR	Navigation	DR	Navigation	DR	Navigation	DR	Navigation	DR	Navigation	DR
Direction	Center	Direction	Center	Direction	Center	Direction	Center	Direction	Center	Direction	Center	Direction	Center	Direction	Center
Size	1240	Size	90	Size	279	Size	5	Size	104	Size	-90	Size	102	Size	102
Loss Of Guidance	N/A	Loss Of Guidance	N/A	Loss Of Guidance	N/A	Loss Of Guidance	N/A	Loss Of Guidance	N/A	Loss Of Guidance	N/A	Loss Of Guidance	N/A	Loss Of Guidance	N/A
Obstacle Avoidance	1	Obstacle Avoidance	1	Obstacle Avoidance	1	Obstacle Avoidance	1	Obstacle Avoidance	1	Obstacle Avoidance	1	Obstacle Avoidance	1	Obstacle Avoidance	1
Output	N/A	Output	N/A	Output	N/A	Output	#7 Pin Drop	Output		Output		Output	#6 pin up	Output	N/a
END OF STEP		END OF STEP		END OF STEP		END OF STEP		END OF STEP		END OF STEP		END OF STEP		END OF STEP	
END MODE	Distance	END MODE	Distance	END MODE	Distance	END MODE	time	END MODE	Distance	END MODE	Distance	END MODE	Distance	END MODE	Distance
END ACTION	Merge	END ACTION	Merge	END ACTION	Merge	END ACTION	Merge	END ACTION	Merge	END ACTION	Merge	END ACTION	Merge	END ACTION	Merge
NEXT ROUTE	13	NEXT ROUTE	13	NEXT ROUTE	13	NEXT ROUTE	13	NEXT ROUTE	13	NEXT ROUTE	13	NEXT ROUTE	13	NEXT ROUTE	13
NEXT STEP	26	NEXT STEP	27	NEXT STEP	28	NEXT STEP	29	NEXT STEP	30	NEXT STEP	31	NEXT STEP	32	NEXT STEP	33

Route 13:33		Route 13:34		Route 13:35		Route 13:36		Route 13:37		Route 13:38		Route 13:39		Route 13:40	
STEP INITIATION		STEP INITIATION		STEP INITIATION		STEP INITIATION		STEP INITIATION		STEP INITIATION		STEP INITIATION		STEP INITIATION	
Go Mode	Auto	Go Mode	Auto	Go Mode	Auto	Go Mode	Auto	Go Mode	Auto	Go Mode	Auto	Go Mode	Auto	Go Mode	Auto
Radio Input	dio Input 1	Radio Input	dio Input 1	Radio Input	dio Input 1	Radio Input	dio Input 1	Radio Input	dio Input 1	Radio Input	dio Input 1	Radio Input	dio Input 1	Radio Input	dio Input 1
Hard Wire Input	N/A	Hard Wire Input	N/A	Hard Wire Input	N/A	Hard Wire Input	N/A	Hard Wire Input	N/A	Hard Wire Input	N/A	Hard Wire Input	N/A	Hard Wire Input	N/A
BIT	N/A	BIT	N/A	BIT	N/A	BIT	N/A	BIT	N/A	BIT	N/A	BIT	N/A	BIT	N/A
STEP ACTION		STEP ACTION		STEP ACTION		STEP ACTION		STEP ACTION		STEP ACTION		STEP ACTION		STEP ACTION	
Function	Rotate	Function	Reverse	Function	Delay	Function	Forward	Function	Rotate	Function	Reverse	Function	Forward	Function	Rotate
Speed	33	Speed	33	Speed	33	Speed	33	Speed	33	Speed	33	Speed	33	Speed	33
Navigation	DR	Navigation	DR	Navigation	DR	Navigation	DR	Navigation	DR	Navigation	DR	Navigation	DR	Navigation	DR
Direction	Center	Direction	Center	Direction	Center	Direction	Center	Direction	Center	Direction	Center	Direction	Center	Direction	Center
Size	45	Size	99	Size	5	Size	99	Size	45	Size	104	Size	104	Size	-90
Loss Of Guidance	N/A	Loss Of Guidance	N/A	Loss Of Guidance	N/A	Loss Of Guidance	N/A	Loss Of Guidance	N/A	Loss Of Guidance	N/A	Loss Of Guidance	N/A	Loss Of Guidance	N/A
Obstacle Avoidance	1	Obstacle Avoidance	1	Obstacle Avoidance	1	Obstacle Avoidance	1	Obstacle Avoidance	1	Obstacle Avoidance	1	Obstacle Avoidance	1	Obstacle Avoidance	1
Output	N/a	Output	N/a	Output	#7 pin drop	Output	N/a	Output	N/a	Output	#7 pin raise	Output	N/A	Output	N/A
END OF STEP		END OF STEP		END OF STEP		END OF STEP		END OF STEP		END OF STEP		END OF STEP		END OF STEP	
END MODE	Distance	END MODE	Distance	END MODE	time	END MODE	Distance	END MODE	Distance	END MODE	Distance	END MODE	Distance	END MODE	Distance
END ACTION	Merge	END ACTION	Merge	END ACTION	Merge	END ACTION	Merge	END ACTION	Merge	END ACTION	Merge	END ACTION	Merge	END ACTION	Merge
NEXT ROUTE	13	NEXT ROUTE	13	NEXT ROUTE	13	NEXT ROUTE	13	NEXT ROUTE	13	NEXT ROUTE	13	NEXT ROUTE	13	NEXT ROUTE	13
NEXT STEP	34	NEXT STEP	35	NEXT STEP	36	NEXT STEP	37	NEXT STEP	38	NEXT STEP	39	NEXT STEP	40	NEXT STEP	41

Route 13:41		Route 13:42		Route 13:43		Route 13:44		Route 13:45		Route 13:46		Route 13:47		Route 13:48	
STEP INITIATION		STEP INITIATION		STEP INITIATION		STEP INITIATION		STEP INITIATION		STEP INITIATION		STEP INITIATION		STEP INITIATION	
Go Mode	Auto	Go Mode	Auto	Go Mode	Auto	Go Mode	Auto	Go Mode	Auto	Go Mode	Auto	Go Mode	Auto	Go Mode	Auto
Radio Input	dio Input 1	Radio Input	dio Input 1	Radio Input	dio Input 1	Radio Input	dio Input 1	Radio Input	dio Input 1	Radio Input	dio Input 1	Radio Input	dio Input 1	Radio Input	dio Input 1
Hard Wire Input	N/A	Hard Wire Input	N/A	Hard Wire Input	N/A	Hard Wire Input	N/A	Hard Wire Input	N/A	Hard Wire Input	Cart Prese	Hard Wire Input		Hard Wire Input	
BIT	N/A	BIT	N/A	BIT	N/A	BIT	N/A	BIT	N/A	BIT	N/A	BIT	N/A	BIT	N/A
STEP ACTION		STEP ACTION		STEP ACTION		STEP ACTION		STEP ACTION		STEP ACTION		STEP ACTION		STEP ACTION	
Function	Reverse	Function	Delay	Function	Forward	Function	Rotate	Function	Reverse	Function	Forward	Function	Rotate	Function	Forward
Speed	33	Speed	33	Speed	33	Speed	33	Speed	33	Speed	33	Speed	33	Speed	33
Navigation	DR	Navigation	DR	Navigation	DR	Navigation	DR	Navigation	DR	Navigation	DR	Navigation	DR	Navigation	DR
Direction	Center	Direction	Center	Direction	Center	Direction	Center	Direction	Center	Direction	Center	Direction	Center	Direction	Center
Size	102	Size	5	Size	102	Size	45	Size	99	Size	99	Size	45	Size	174
Loss Of Guidance	N/A	Loss Of Guidance	N/A	Loss Of Guidance	N/A	Loss Of Guidance	N/A	Loss Of Guidance	N/A	Loss Of Guidance	N/A	Loss Of Guidance	N/A	Loss Of Guidance	N/A
Obstacle Avoidance	1	Obstacle Avoidance	1	Obstacle Avoidance	1	Obstacle Avoidance	1	Obstacle Avoidance	1	Obstacle Avoidance	1	Obstacle Avoidance	1	Obstacle Avoidance	1
Output	N/A	Output	#7 Pin Drop	Output	N/a	Output	N/a	Output	#6 Pin Raise	Output	N/a	Output	N/a	Output	N/a
END OF STEP		END OF STEP		END OF STEP		END OF STEP		END OF STEP		END OF STEP		END OF STEP		END OF STEP	
END MODE	Distance	END MODE	Time	END MODE	Distance	END MODE	Distance	END MODE	Distance	END MODE	Distance	END MODE	Distance	END MODE	Distance
END ACTION	Merge	END ACTION	Merge	END ACTION	Merge	END ACTION	Merge	END ACTION	Merge	END ACTION	Merge	END ACTION	Merge	END ACTION	Merge
NEXT ROUTE	13	NEXT ROUTE	13	NEXT ROUTE	13	NEXT ROUTE	13	NEXT ROUTE	13	NEXT ROUTE	13	NEXT ROUTE	13	NEXT ROUTE	13
NEXT STEP	42	NEXT STEP	43	NEXT STEP	44	NEXT STEP	45	NEXT STEP	46	NEXT STEP	47	NEXT STEP	48	NEXT STEP	49

Route 13:49		Route 13:50		Route 13:51		Route 13:52		Route 13:53		Route 13:54		Route 13:55		Route 13:56	
STEP INITIATION		STEP INITIATION		STEP INITIATION		STEP INITIATION		STEP INITIATION		STEP INITIATION		STEP INITIATION		STEP INITIATION	
Go Mode	Auto	Go Mode	Auto	Go Mode	Auto	Go Mode	Auto	Go Mode	Auto	Go Mode	Auto	Go Mode	Auto	Go Mode	Auto
Radio Input	dio Input 1	Radio Input	dio Input 1	Radio Input	dio Input 1	Radio Input	dio Input 1	Radio Input	dio Input 1	Radio Input	dio Input 1	Radio Input	dio Input 1	Radio Input	dio Input 1
Hard Wire Input		Hard Wire Input		Hard Wire Input		Hard Wire Input		Hard Wire Input		Hard Wire Input		Hard Wire Input		Hard Wire Input	
BIT	N/A	BIT	N/A	BIT	N/A	BIT	N/A	BIT	N/A	BIT	N/A	BIT	N/A	BIT	N/A
STEP ACTION		STEP ACTION		STEP ACTION		STEP ACTION		STEP ACTION		STEP ACTION		STEP ACTION		STEP ACTION	
Function	Rotate	Function	Forward	Function	Rotate	Function	Forward	Function	Rotate	Function	Forward	Function	Rotate	Function	Forward
Speed	33	Speed	33	Speed	33	Speed	33	Speed	33	Speed	33	Speed	33	Speed	33
Navigation	DR	Navigation	DR	Navigation	DR	Navigation	DR	Navigation	DR	Navigation	DR	Navigation	DR	Navigation	DR
Direction	Center	Direction	Center	Direction	Center	Direction	Center	Direction	Center	Direction	Center	Direction	Center	Direction	Center
Size	90	Size	1240	Size	-90	Size	2284	Size	90	Size	511	Size	90	Size	208
Loss Of Guidance	N/A	Loss Of Guidance	N/A	Loss Of Guidance	N/A	Loss Of Guidance	N/A	Loss Of Guidance	N/A	Loss Of Guidance	N/A	Loss Of Guidance	N/A	Loss Of Guidance	N/A
Obstacle Avoidance	1	Obstacle Avoidance	1	Obstacle Avoidance	1	Obstacle Avoidance	1	Obstacle Avoidance	1	Obstacle Avoidance	1	Obstacle Avoidance	1	Obstacle Avoidance	1
Output	N/a	Output	N/a	Output	N/a	Output	N/a	Output	N/a	Output	N/a	Output	N/a	Output	N/a
END OF STEP		END OF STEP		END OF STEP		END OF STEP		END OF STEP		END OF STEP		END OF STEP		END OF STEP	
END MODE	Distance	END MODE	Distance	END MODE	Distance	END MODE	Distance	END MODE	Distance	END MODE	Distance	END MODE	Distance	END MODE	Distance
END ACTION	Merge	END ACTION	Merge	END ACTION	Merge	END ACTION	Merge	END ACTION	Merge	END ACTION	Merge	END ACTION	Merge	END ACTION	Merge
NEXT ROUTE	13	NEXT ROUTE	13	NEXT ROUTE	13	NEXT ROUTE	13	NEXT ROUTE	13	NEXT ROUTE	13	NEXT ROUTE	13	NEXT ROUTE	13
NEXT STEP	50	NEXT STEP	51	NEXT STEP	52	NEXT STEP	53	NEXT STEP	54	NEXT STEP	55	NEXT STEP	56	NEXT STEP	57

Route 13:57		Route 13:58		Route 13:59		Route 13:60		Route 13:61		Route 13:62		Route 13:63		Route 13:64	
STEP INITIATION		STEP INITIATION		STEP INITIATION		STEP INITIATION		STEP INITIATION		STEP INITIATION		STEP INITIATION		STEP INITIATION	
Go Mode	Auto	Go Mode	Auto	Go Mode	Auto	Go Mode	Auto	Go Mode	Auto	Go Mode	Auto	Go Mode	Auto	Go Mode	Auto
Radio Input	dio Input 1	Radio Input	dio Input 1	Radio Input	dio Input 1	Radio Input	dio Input 1	Radio Input	dio Input 1	Radio Input	dio Input 1	Radio Input	dio Input 1	Radio Input	dio Input 1
Hard Wire Input		Hard Wire Input		Hard Wire Input		Hard Wire Input		Hard Wire Input		Hard Wire Input		Hard Wire Input		Hard Wire Input	
BIT	N/A	BIT	N/A	BIT	N/A	BIT	N/A	BIT	N/A	BIT	N/A	BIT	N/A	BIT	N/A
STEP ACTION		STEP ACTION		STEP ACTION		STEP ACTION		STEP ACTION		STEP ACTION		STEP ACTION		STEP ACTION	
Function	Rotate	Function	Reverse	Function	Dellay	Function	Forward	Function	Rotate	Function	Forward	Function	Rotate	Function	Forward
Speed	33	Speed	33	Speed	33	Speed	33	Speed	33	Speed	33	Speed	33	Speed	33
Navigation	DR	Navigation	DR	Navigation	DR	Navigation	DR	Navigation	DR	Navigation	DR	Navigation	DR	Navigation	DR
Direction	Center	Direction	Center	Direction	Center	Direction	Center	Direction	Center	Direction	Center	Direction	Center	Direction	Center
Size	-90	Size	62	Size	5	Size	62	Size	-90	Size	208	Size	-90	Size	511
Loss Of Guidance	N/A	Loss Of Guidance	N/A	Loss Of Guidance	N/A	Loss Of Guidance	N/A	Loss Of Guidance	N/A	Loss Of Guidance	N/A	Loss Of Guidance	N/A	Loss Of Guidance	N/A
Obstacle Avoidance	1	Obstacle Avoidance	1	Obstacle Avoidance	1	Obstacle Avoidance	1	Obstacle Avoidance	1	Obstacle Avoidance	1	Obstacle Avoidance	1	Obstacle Avoidance	1
Output	N/a	Output	N/a	Output	#7 Pin Drop	Output		Output		Output		Output		Output	
END OF STEP		END OF STEP		END OF STEP		END OF STEP		END OF STEP		END OF STEP		END OF STEP		END OF STEP	
END MODE	Distance	END MODE	Distance	END MODE	time	END MODE	Distance	END MODE	Distance	END MODE	Distance	END MODE	Distance	END MODE	Distance
END ACTION	Merge	END ACTION	Merge	END ACTION	Merge	END ACTION	Merge	END ACTION	Merge	END ACTION	Merge	END ACTION	Merge	END ACTION	Merge
NEXT ROUTE	13	NEXT ROUTE	13	NEXT ROUTE	13	NEXT ROUTE	13	NEXT ROUTE	13	NEXT ROUTE	13	NEXT ROUTE	13	NEXT ROUTE	13
NEXT STEP	58	NEXT STEP	59	NEXT STEP	60	NEXT STEP	61	NEXT STEP	62	NEXT STEP	63	NEXT STEP	64	NEXT STEP	65

Route 13:65		Route 13:66		Route 13:67		Route 13:68		Route 13:69		Route 13:70		Route 13:71		Route 13:72	
STEP INITIATION		STEP INITIATION		STEP INITIATION		STEP INITIATION		STEP INITIATION		STEP INITIATION		STEP INITIATION		STEP INITIATION	
Go Mode	Auto	Go Mode	Auto	Go Mode	Auto	Go Mode	Auto	Go Mode	Auto	Go Mode	Auto	Go Mode	Auto	Go Mode	Auto
Radio Input	dio Input 1-	Radio Input	dio Input 1-	Radio Input	dio Input 1-	Radio Input	dio Input 1-	Radio Input	dio Input 1-	Radio Input	dio Input 1-	Radio Input	dio Input 1-	Radio Input	dio Input 1-
Hard Wire Input		Hard Wire Input		Hard Wire Input	N/a	Hard Wire Input	N/a	Hard Wire Input	N/a	Hard Wire Input	N/a	Hard Wire Input	N/a	Hard Wire Input	N/a
BIT	N/A	BIT	N/A	BIT	N/A	BIT	N/A	BIT	N/A	BIT	N/A	BIT	N/A	BIT	N/A
STEP ACTION		STEP ACTION		STEP ACTION		STEP ACTION		STEP ACTION		STEP ACTION		STEP ACTION		STEP ACTION	
Function	Rotate	Function	Forward	Function	Rotate	Function	Forward	Function	Rotate	Function	Forward	Function	Rotate	Function	Forward
Speed	33	Speed	33	Speed	33	Speed	33	Speed	33	Speed	33	Speed	33	Speed	33
Navigation	DR	Navigation	DR	Navigation	DR	Navigation	DR	Navigation	DR	Navigation	DR	Navigation	DR	Navigation	DR
Direction	Center	Direction	Center	Direction	Center	Direction	Center	Direction	Center	Direction	Center	Direction	Center	Direction	Center
Size	-90	Size	2284	Size	90	Size	962	Size	-90	Size	525	Size	90	Size	417
Loss Of Guidance	N/A	Loss Of Guidance	N/A	Loss Of Guidance	N/A	Loss Of Guidance	N/A	Loss Of Guidance	N/A	Loss Of Guidance	N/A	Loss Of Guidance	N/A	Loss Of Guidance	N/A
Obstacle Avoidance	1	Obstacle Avoidance	1	Obstacle Avoidance	1	Obstacle Avoidance	1	Obstacle Avoidance	1	Obstacle Avoidance	1	Obstacle Avoidance	1	Obstacle Avoidance	1
Output		Output		Output	N/a	Output	N/a	Output	N/a	Output	N/a	Output	N/a	Output	N/a
END OF STEP		END OF STEP		END OF STEP		END OF STEP		END OF STEP		END OF STEP		END OF STEP		END OF STEP	
END MODE	Distance	END MODE	Distance	END MODE	Distance	END MODE	Distance	END MODE	Distance	END MODE	Distance	END MODE	Distance	END MODE	Distance
END ACTION	Merge	END ACTION	Merge	END ACTION	Merge	END ACTION	Merge	END ACTION	Merge	END ACTION	Merge	END ACTION	Merge	END ACTION	Merge
NEXT ROUTE	13	NEXT ROUTE	13	NEXT ROUTE	13	NEXT ROUTE	13	NEXT ROUTE	13	NEXT ROUTE	13	NEXT ROUTE	13	NEXT ROUTE	13
NEXT STEP	66	NEXT STEP	67	NEXT STEP	68	NEXT STEP	69	NEXT STEP	70	NEXT STEP	71	NEXT STEP	72	NEXT STEP	73

Route 13:73		Route 13:74		Route 0: 1	
STEP INITIATION		STEP INITIATION		STEP INITIATION	
Go Mode	Auto	Go Mode	Auto	Go Mode	nput Trigge
Radio Input	dio Input 1-	Radio Input	dio Input 1-	Radio Input	dio Input 1-
Hard Wire Input	N/a	Hard Wire Input	N/a	Hard Wire Input	N/a
BIT	N/A	BIT	N/A	BIT	BIT #1-#24
STEP ACTION		STEP ACTION		STEP ACTION	
Function	Rotate	Function	Reverse	Function	Auto
Speed	33	Speed	33	Speed	33
Navigation	DR	Navigation	DR	Navigation	DR
Direction	Center	Direction	Center	Direction	Center
Size	-90	Size	66	Size	66
Loss Of Guidance	N/A	Loss Of Guidance	N/A	Loss Of Guidance	N/A
Obstacle Avoidance	1	Obstacle Avoidance	1	Obstacle Avoidance	1
Output	N/a	Output	N/a	Output	N/a
END OF STEP		END OF STEP		END OF STEP	
END MODE	Distance	END MODE	Distance	END MODE	Distance
END ACTION	Merge	END ACTION	Merge	END ACTION	Merge
NEXT ROUTE	13	NEXT ROUTE	0	NEXT ROUTE	0
NEXT STEP	74	NEXT STEP	1	NEXT STEP	1

Tier 3 Route 14

Route 14:1		Route 14:2		Route 14:3		Route 14:4		Route 14:5		Route 14:6		Route 14:7		Route 14:8	
STEP INITIATION		**STEP INITIATION**		**STEP INITIATION**		**STEP INITIATION**		**STEP INITIATION**		**STEP INITIATION**		**STEP INITIATION**		**STEP INITIATION**	
Go Mode	nput Triggers	**Go Mode**	Auto	**Go Mode**	Auto	**Go Mode**	Auto	**Go Mode**	Auto	**Go Mode**	Auto	**Go Mode**	Auto	**Go Mode**	Auto
Radio Input	adio Input 1-2	**Radio Input**	dio Input 1-	**Radio Input**	dio Input 1-	**Radio Input**	dio Input 1-	**Radio Input**	dio Input 1-	**Radio Input**	dio Input 1-	**Radio Input**	dio Input 1-	**Radio Input**	dio Input 1-
Hard Wire Input	N/A	**Hard Wire Input**	N/A	**Hard Wire Input**	N/A	**Hard Wire Input**	N/A	**Hard Wire Input**	N/A	**Hard Wire Input**	N/A	**Hard Wire Input**	N/A	**Hard Wire Input**	N/A
BIT	Bit #1 off	**BIT**	N/A	**BIT**	N/A	**BIT**	N/A	**BIT**	N/A	**BIT**	N/A	**BIT**	N/A	**BIT**	N/A
Bit#11 On, #21 On	it #5 and 6 Off														
Home Position RFID	it #7 and 9 of														
	t #8 and 10 o														
STEP ACTION		**STEP ACTION**		**STEP ACTION**		**STEP ACTION**		**STEP ACTION**		**STEP ACTION**		**STEP ACTION**		**STEP ACTION**	
Function	Dispatch	**Function**	Forward	**Function**	Rotate	**Function**	Forward	**Function**	Rotate	**Function**	Forward	**Function**	Rotate	**Function**	Forward
Speed	N/A	**Speed**	33	**Speed**	33	**Speed**	33	**Speed**	33	**Speed**	33	**Speed**	33	**Speed**	33
Navigation	N/A	**Navigation**	DR	**Navigation**	DR	**Navigation**	DR	**Navigation**	DR	**Navigation**	DR	**Navigation**	DR	**Navigation**	DR
Direction	N/A	**Direction**	Center	**Direction**	Center	**Direction**	Center	**Direction**	Center	**Direction**	Center	**Direction**	Center	**Direction**	Center
Size	N/A	**Size**	66	**Size**	-90	**Size**	417	**Size**	-90	**Size**	525	**Size**	90	**Size**	962
Loss Of Guidance	N/A	**Loss Of Guidance**	N/A	**Loss Of Guidance**	N/A	**Loss Of Guidance**	N/A	**Loss Of Guidance**	N/A	**Loss Of Guidance**	N/A	**Loss Of Guidance**	N/A	**Loss Of Guidance**	N/A
Obstacle Avoidance	N/A	**Obstacle Avoidance**	1	**Obstacle Avoidance**	1	**Obstacle Avoidance**	1	**Obstacle Avoidance**	1	**Obstacle Avoidance**	1	**Obstacle Avoidance**	1	**Obstacle Avoidance**	1
Output	N/A	**Output**	N/A	**Output**	N/A	**Output**	N/A	**Output**	N/A	**Output**	N/A	**Output**	N/A	**Output**	N/A
END OF STEP		**END OF STEP**		**END OF STEP**		**END OF STEP**		**END OF STEP**		**END OF STEP**		**END OF STEP**		**END OF STEP**	
END MODE	N/A	**END MODE**	Distance	**END MODE**	Distance	**END MODE**	Distance	**END MODE**	Distance	**END MODE**	Distance	**END MODE**	Distance	**END MODE**	Distance
END ACTION	e Bit #11, #2	**END ACTION**	Merge	**END ACTION**	Merge	**END ACTION**	Merge	**END ACTION**	Merge	**END ACTION**	Merge	**END ACTION**	Merge	**END ACTION**	Merge
NEXT ROUTE	14	**NEXT ROUTE**	14	**NEXT ROUTE**	14	**NEXT ROUTE**	14	**NEXT ROUTE**	14	**NEXT ROUTE**	14	**NEXT ROUTE**	14	**NEXT ROUTE**	14
NEXT STEP	**2**	**NEXT STEP**	**3**	**NEXT STEP**	**4**	**NEXT STEP**	**5**	**NEXT STEP**	**6**	**NEXT STEP**	**7**	**NEXT STEP**	**8**	**NEXT STEP**	**9**

Route 14:9		Route 14:10		Route 14:11		Route 14:12		Route 14:13		Route 14:14		Route 14:15		Route 14:16	
STEP INITIATION		**STEP INITIATION**		**STEP INITIATION**		**STEP INITIATION**		**STEP INITIATION**		**STEP INITIATION**		**STEP INITIATION**		**STEP INITIATION**	
Go Mode	Auto	**Go Mode**	Auto	**Go Mode**	Auto	**Go Mode**	Auto	**Go Mode**	Auto	**Go Mode**	Auto	**Go Mode**	Auto	**Go Mode**	Auto
Radio Input	dio Input 1-	**Radio Input**	dio Input 1-	**Radio Input**	dio Input 1-	**Radio Input**	dio Input 1-	**Radio Input**	dio Input 1-	**Radio Input**	dio Input 1-	**Radio Input**	dio Input 1-	**Radio Input**	dio Input 1-
Hard Wire Input	N/A	**Hard Wire Input**	N/A	**Hard Wire Input**	N/A	**Hard Wire Input**	N/A	**Hard Wire Input**	N/A	**Hard Wire Input**	N/A	**Hard Wire Input**	N/A	**Hard Wire Input**	N/A
BIT	N/A	**BIT**	N/A	**BIT**	N/A	**BIT**	N/A	**BIT**	N/A	**BIT**	N/A	**BIT**	N/A	**BIT**	N/A
STEP ACTION		**STEP ACTION**		**STEP ACTION**		**STEP ACTION**		**STEP ACTION**		**STEP ACTION**		**STEP ACTION**		**STEP ACTION**	
Function	Rotate	**Function**	Forward	**Function**	Rotate	**Function**	Forward	**Function**	Rotate	**Function**	Forward	**Function**	Rotate	**Function**	Reverse
Speed	33	**Speed**	33	**Speed**	33	**Speed**	33	**Speed**	33	**Speed**	33	**Speed**	33	**Speed**	33
Navigation	DR	**Navigation**	DR	**Navigation**	DR	**Navigation**	DR	**Navigation**	DR	**Navigation**	DR	**Navigation**	DR	**Navigation**	DR
Direction	Center	**Direction**	Center	**Direction**	Center	**Direction**	Center	**Direction**	Center	**Direction**	Center	**Direction**	Center	**Direction**	Center
Size	-90	**Size**	2284	**Size**	90	**Size**	511	**Size**	90	**Size**	274	**Size**	-90	**Size**	62
Loss Of Guidance	N/A	**Loss Of Guidance**	N/A	**Loss Of Guidance**	N/A	**Loss Of Guidance**	N/A	**Loss Of Guidance**	N/A	**Loss Of Guidance**	N/A	**Loss Of Guidance**	N/A	**Loss Of Guidance**	N/A
Obstacle Avoidance	1	**Obstacle Avoidance**	1	**Obstacle Avoidance**	1	**Obstacle Avoidance**	1	**Obstacle Avoidance**	1	**Obstacle Avoidance**	1	**Obstacle Avoidance**	1	**Obstacle Avoidance**	1
Output	N/A	**Output**	N/A	**Output**	N/A	**Output**	N/A	**Output**	N/A	**Output**	N/A	**Output**	N/A	**Output**	#6 Pin Up
END OF STEP		**END OF STEP**		**END OF STEP**		**END OF STEP**		**END OF STEP**		**END OF STEP**		**END OF STEP**		**END OF STEP**	
END MODE	Distance	**END MODE**	Distance	**END MODE**	Distance	**END MODE**	Distance	**END MODE**	Distance	**END MODE**	Distance	**END MODE**	Distance	**END MODE**	Distance
END ACTION	Merge	**END ACTION**	Merge	**END ACTION**	Merge	**END ACTION**	Merge	**END ACTION**	Merge	**END ACTION**	Merge	**END ACTION**	Merge	**END ACTION**	Merge
NEXT ROUTE	14	**NEXT ROUTE**	14	**NEXT ROUTE**	14	**NEXT ROUTE**	14	**NEXT ROUTE**	14	**NEXT ROUTE**	14	**NEXT ROUTE**	14	**NEXT ROUTE**	14
NEXT STEP	**10**	**NEXT STEP**	**11**	**NEXT STEP**	**12**	**NEXT STEP**	**13**	**NEXT STEP**	**14**	**NEXT STEP**	**15**	**NEXT STEP**	**16**	**NEXT STEP**	**17**

Route 14:17		Route 14:18		Route 14:19		Route 14:20		Route 14:21		Route 14:22		Route 14:23		Route 14:24	
STEP INITIATION		**STEP INITIATION**		**STEP INITIATION**		**STEP INITIATION**		**STEP INITIATION**		**STEP INITIATION**		**STEP INITIATION**		**STEP INITIATION**	
Go Mode	Auto	**Go Mode**	Auto	**Go Mode**	Auto	**Go Mode**	Auto	**Go Mode**	Auto	**Go Mode**	Auto	**Go Mode**	Auto	**Go Mode**	Auto
Radio Input	dio Input 1-	**Radio Input**	dio Input 1-	**Radio Input**	dio Input 1-	**Radio Input**	dio Input 1-	**Radio Input**	dio Input 1-	**Radio Input**	dio Input 1-	**Radio Input**	dio Input 1-	**Radio Input**	dio Input 1-
Hard Wire Input	N/A	**Hard Wire Input**	N/A	**Hard Wire Input**	N/A	**Hard Wire Input**	N/A	**Hard Wire Input**	N/A	**Hard Wire Input**	N/A	**Hard Wire Input**	N/A	**Hard Wire Input**	N/A
BIT	N/A	**BIT**	N/A	**BIT**	N/A	**BIT**	N/A	**BIT**	N/A	**BIT**	N/A	**BIT**	N/A	**BIT**	N/A
STEP ACTION		**STEP ACTION**		**STEP ACTION**		**STEP ACTION**		**STEP ACTION**		**EP ACTION**		**STEP ACTION**		**STEP ACTION**	
Function	Forward	**Function**	Rotate	**Function**	Forward	**Function**	Rotate	**Function**	Forward	**Function**	Rotate	**Function**	Forward	**Function**	Rotate
Speed	33	**Speed**	33	**Speed**	33	**Speed**	33	**Speed**	33	**Speed**	33	**Speed**	33	**Speed**	33
Navigation	DR	**Navigation**	DR	**Navigation**	DR	**Navigation**	DR	**Navigation**	DR	**Navigation**	DR	**Navigation**	DR	**Navigation**	DR
Direction	Center	**Direction**	Center	**Direction**	Center	**Direction**	Center	**Direction**	Center	**Direction**	Center	**Direction**	Center	**Direction**	Center
Size	62	**Size**	-90	**Size**	274	**Size**	-90	**Size**	511	**Size**	-90	**Size**	2284	**Size**	90
Loss Of Guidance	N/A	**Loss Of Guidance**	N/A	**Loss Of Guidance**	N/A	**Loss Of Guidance**	N/A	**Loss Of Guidance**	N/A	**Loss Of Guidance**	N/A	**Loss Of Guidance**	N/A	**Loss Of Guidance**	N/A
Obstacle Avoidance	1	**Obstacle Avoidance**	1	**Obstacle Avoidance**	1	**Obstacle Avoidance**	1	**Obstacle Avoidance**	1	**Obstacle Avoidance**	1	**Obstacle Avoidance**	1	**Obstacle Avoidance**	1
Output	N/A	**Output**	N/A	**Output**	N/A	**Output**	N/A	**Output**	N/A	**Output**	N/A	**Output**	N/A	**Output**	N/A
END OF STEP		**END OF STEP**		**END OF STEP**		**END OF STEP**		**END OF STEP**		**ID OF STEP**		**END OF STEP**		**END OF STEP**	
END MODE	Distance	**END MODE**	Distance	**END MODE**	Distance	**END MODE**	Distance	**END MODE**	Distance	**END MODE**	Distance	**END MODE**	Distance	**END MODE**	Distance
END ACTION	Merge	**END ACTION**	Merge	**END ACTION**	Merge	**END ACTION**	Merge	**END ACTION**	Merge	**END ACTION**	Merge	**END ACTION**	Merge	**END ACTION**	Merge
NEXT ROUTE	14	**NEXT ROUTE**	14	**NEXT ROUTE**	14	**NEXT ROUTE**	14	**NEXT ROUTE**	14	**NEXT ROUTE**	14	**NEXT ROUTE**	14	**NEXT ROUTE**	14
NEXT STEP	**18**	**NEXT STEP**	**19**	**NEXT STEP**	**20**	**NEXT STEP**	**21**	**NEXT STEP**	**22**	**NEXT STEP**	**23**	**NEXT STEP**	**24**	**NEXT STEP**	**25**

Route 14:25		Route 14:26		Route 14:27		Route 14:28		Route 14:29		Route 14:30		Route 14:31		Route 14:32	
STEP INITIATION		**STEP INITIATION**		**STEP INITIATION**		**STEP INITIATION**		**STEP INITIATION**		**STEP INITIATION**		**STEP INITIATION**		**STEP INITIATION**	
Go Mode	Auto	**Go Mode**	Auto	**Go Mode**	Auto	**Go Mode**	Auto	**Go Mode**	Auto	**Go Mode**	Auto	**Go Mode**	Auto	**Go Mode**	Auto
Radio Input	dio Input 1-	**Radio Input**	dio Input 1-	**Radio Input**	dio Input 1-	**Radio Input**	dio Input 1-	**Radio Input**	dio Input 1-	**Radio Input**	dio Input 1-	**Radio Input**	dio Input 1-	**Radio Input**	dio Input 1-
Hard Wire Input	N/A	**Hard Wire Input**	N/A	**Hard Wire Input**	N/A	**Hard Wire Input**	N/A	**Hard Wire Input**	N/A	**Hard Wire Input**	N/A	**Hard Wire Input**	N/A	**Hard Wire Input**	Cart prese
BIT	N/A	**BIT**	N/A	**BIT**	N/A	**BIT**	N/A	**BIT**	N/A	**BIT**	N/A	**BIT**	N/A	**BIT**	N/A
STEP ACTION		**STEP ACTION**		**STEP ACTION**		**STEP ACTION**		**STEP ACTION**		**STEP ACTION**		**STEP ACTION**		**STEP ACTION**	
Function	Forward	**Function**	Rotate	**Function**	Reverse	**Function**	Delay	**Function**	Forward	**Function**	Rotate	**Function**	Reverse	**Function**	Forward
Speed	33	**Speed**	33	**Speed**	33	**Speed**	33	**Speed**	33	**Speed**	33	**Speed**	33	**Speed**	33
Navigation	DR	**Navigation**	DR	**Navigation**	DR	**Navigation**	DR	**Navigation**	DR	**Navigation**	DR	**Navigation**	DR	**Navigation**	DR
Direction	Center	**Direction**	Center	**Direction**	Center	**Direction**	Center	**Direction**	Center	**Direction**	Center	**Direction**	Center	**Direction**	Center
Size	1240	**Size**	90	**Size**	279	**Size**	5	**Size**	104	**Size**	-90	**Size**	102	**Size**	102
Loss Of Guidance	N/A	**Loss Of Guidance**	N/A	**Loss Of Guidance**	N/A	**Loss Of Guidance**	N/A	**Loss Of Guidance**	N/A	**Loss Of Guidance**	N/A	**Loss Of Guidance**	N/A	**Loss Of Guidance**	N/A
Obstacle Avoidance	1	**Obstacle Avoidance**	1	**Obstacle Avoidance**	1	**Obstacle Avoidance**	1	**Obstacle Avoidance**	1	**Obstacle Avoidance**	1	**Obstacle Avoidance**	1	**Obstacle Avoidance**	1
Output	N/A	**Output**	N/A	**Output**	N/A	**Output**	#7 Pin Drop	**Output**		**Output**		**Output**	#6 pin up	**Output**	N/a
END OF STEP		**END OF STEP**		**END OF STEP**		**END OF STEP**		**END OF STEP**		**END OF STEP**		**END OF STEP**		**END OF STEP**	
END MODE	Distance	**END MODE**	Distance	**END MODE**	Distance	**END MODE**	time	**END MODE**	Distance	**END MODE**	Distance	**END MODE**	Distance	**END MODE**	Distance
END ACTION	Merge	**END ACTION**	Merge	**END ACTION**	Merge	**END ACTION**	Merge	**END ACTION**	Merge	**END ACTION**	Merge	**END ACTION**	Merge	**END ACTION**	Merge
NEXT ROUTE	14	**NEXT ROUTE**	14	**NEXT ROUTE**	14	**NEXT ROUTE**	14	**NEXT ROUTE**	14	**NEXT ROUTE**	14	**NEXT ROUTE**	14	**NEXT ROUTE**	14
NEXT STEP	**26**	**NEXT STEP**	**27**	**NEXT STEP**	**28**	**NEXT STEP**	**29**	**NEXT STEP**	**30**	**NEXT STEP**	**31**	**NEXT STEP**	**32**	**NEXT STEP**	**33**

Route 14:33		Route 14:34		Route 14:35		Route 14:36		Route 14:37		Route 14:38		Route 14:39		Route 14:40	
STEP INITIATION		STEP INITIATION		STEP INITIATION		STEP INITIATION		STEP INITIATION		STEP INITIATION		STEP INITIATION		STEP INITIATION	
Go Mode	Auto	Go Mode	Auto	Go Mode	Auto	Go Mode	Auto	Go Mode	Auto	Go Mode	Auto	Go Mode	Auto	Go Mode	Auto
Radio Input	dio Input 1	Radio Input	dio Input 1	Radio Input	dio Input 1	Radio Input	dio Input 1	Radio Input	dio Input 1	Radio Input	dio Input 1	Radio Input	dio Input 1	Radio Input	dio Input 1
Hard Wire Input	N/A	Hard Wire Input	N/A	Hard Wire Input	N/A	Hard Wire Input	N/A	Hard Wire Input	N/A	Hard Wire Input	N/A	Hard Wire Input	N/A	Hard Wire Input	N/A
BIT	N/A	BIT	N/A	BIT	N/A	BIT	N/A	BIT	N/A	BIT	N/A	BIT	N/A	BIT	N/A
STEP ACTION		STEP ACTION		STEP ACTION		STEP ACTION		STEP ACTION		STEP ACTION		STEP ACTION		STEP ACTION	
Function	Rotate	Function	Reverse	Function	Delay	Function	Forward	Function	Rotate	Function	Reverse	Function	Forward	Function	Rotate
Speed	33	Speed	33	Speed	33	Speed	33	Speed	33	Speed	33	Speed	33	Speed	33
Navigation	DR	Navigation	DR	Navigation	DR	Navigation	DR	Navigation	DR	Navigation	DR	Navigation	DR	Navigation	DR
Direction	Center	Direction	Center	Direction	Center	Direction	Center	Direction	Center	Direction	Center	Direction	Center	Direction	Center
Size	45	Size	99	Size	5	Size	99	Size	45	Size	104	Size	104	Size	-90
Loss Of Guidance	N/A	Loss Of Guidance	N/A	Loss Of Guidance	N/A	Loss Of Guidance	N/A	Loss Of Guidance	N/A	Loss Of Guidance	N/A	Loss Of Guidance	N/A	Loss Of Guidance	N/A
Obstacle Avoidance	1	Obstacle Avoidance	1	Obstacle Avoidance	1	Obstacle Avoidance	1	Obstacle Avoidance	1	Obstacle Avoidance	1	Obstacle Avoidance	1	Obstacle Avoidance	1
Output	N/a	Output	N/a	Output	#7 pin drop	Output	N/a	Output	N/a	Output	#7 pin raise	Output	N/A	Output	N/A
END OF STEP		END OF STEP		END OF STEP		END OF STEP		END OF STEP		END OF STEP		END OF STEP		END OF STEP	
END MODE	Distance	END MODE	Distance	END MODE	time	END MODE	Distance	END MODE	Distance	END MODE	Distance	END MODE	Distance	END MODE	Distance
END ACTION	Merge	END ACTION	Merge	END ACTION	Merge	END ACTION	Merge	END ACTION	Merge	END ACTION	Merge	END ACTION	Merge	END ACTION	Merge
NEXT ROUTE	14	NEXT ROUTE	14	NEXT ROUTE	14	NEXT ROUTE	14	NEXT ROUTE	14	NEXT ROUTE	14	NEXT ROUTE	14	NEXT ROUTE	14
NEXT STEP	34	NEXT STEP	35	NEXT STEP	36	NEXT STEP	37	NEXT STEP	38	NEXT STEP	39	NEXT STEP	40	NEXT STEP	41

Route 14:41		Route 14:42		Route 14:43		Route 14:44		Route 14:45		Route 14:46		Route 14:47		Route 14:48	
STEP INITIATION		STEP INITIATION		STEP INITIATION		STEP INITIATION		STEP INITIATION		STEP INITIATION		STEP INITIATION		STEP INITIATION	
Go Mode	Auto	Go Mode	Auto	Go Mode	Auto	Go Mode	Auto	Go Mode	Auto	Go Mode	Auto	Go Mode	Auto	Go Mode	Auto
Radio Input	dio Input 1	Radio Input	dio Input 1	Radio Input	dio Input 1	Radio Input	dio Input 1	Radio Input	dio Input 1	Radio Input	dio Input 1	Radio Input	dio Input 1	Radio Input	dio Input 1
Hard Wire Input	N/A	Hard Wire Input	N/A	Hard Wire Input	N/A	Hard Wire Input	N/A	Hard Wire Input	N/A	Hard Wire Input	Cart Prese	Hard Wire Input		Hard Wire Input	
BIT	N/A	BIT	N/A	BIT	N/A	BIT	N/A	BIT	N/A	BIT	N/A	BIT	N/A	BIT	N/A
STEP ACTION		STEP ACTION		STEP ACTION		STEP ACTION		STEP ACTION		STEP ACTION		STEP ACTION		STEP ACTION	
Function	Reverse	Function	Delay	Function	Forward	Function	Rotate	Function	Reverse	Function	Forward	Function	Rotate	Function	Forward
Speed	33	Speed	33	Speed	33	Speed	33	Speed	33	Speed	33	Speed	33	Speed	33
Navigation	DR	Navigation	DR	Navigation	DR	Navigation	DR	Navigation	DR	Navigation	DR	Navigation	DR	Navigation	DR
Direction	Center	Direction	Center	Direction	Center	Direction	Center	Direction	Center	Direction	Center	Direction	Center	Direction	Center
Size	102	Size	5	Size	102	Size	45	Size	99	Size	99	Size	45	Size	174
Loss Of Guidance	N/A	Loss Of Guidance	N/A	Loss Of Guidance	N/A	Loss Of Guidance	N/A	Loss Of Guidance	N/A	Loss Of Guidance	N/A	Loss Of Guidance	N/A	Loss Of Guidance	N/A
Obstacle Avoidance	1	Obstacle Avoidance	1	Obstacle Avoidance	1	Obstacle Avoidance	1	Obstacle Avoidance	1	Obstacle Avoidance	1	Obstacle Avoidance	1	Obstacle Avoidance	1
Output	N/A	Output	#7 Pin Drop	Output	N/a	Output	N/a	Output	#6 Pin Raise	Output	N/a	Output	N/a	Output	N/a
END OF STEP		END OF STEP		END OF STEP		END OF STEP		END OF STEP		END OF STEP		END OF STEP		END OF STEP	
END MODE	Distance	END MODE	Time	END MODE	Distance	END MODE	Distance	END MODE	Distance	END MODE	Distance	END MODE	Distance	END MODE	Distance
END ACTION	Merge	END ACTION	Merge	END ACTION	Merge	END ACTION	Merge	END ACTION	Merge	END ACTION	Merge	END ACTION	Merge	END ACTION	Merge
NEXT ROUTE	14	NEXT ROUTE	14	NEXT ROUTE	14	NEXT ROUTE	14	NEXT ROUTE	14	NEXT ROUTE	14	NEXT ROUTE	14	NEXT ROUTE	14
NEXT STEP	42	NEXT STEP	43	NEXT STEP	44	NEXT STEP	45	NEXT STEP	46	NEXT STEP	47	NEXT STEP	48	NEXT STEP	49

Route 14:49		Route 14:50		Route 14:51		Route 14:52		Route 14:53		Route 14:54		Route 14:55		Route 14:56	
STEP INITIATION		STEP INITIATION		STEP INITIATION		STEP INITIATION		STEP INITIATION		STEP INITIATION		STEP INITIATION		STEP INITIATION	
Go Mode	Auto	Go Mode	Auto	Go Mode	Auto	Go Mode	Auto	Go Mode	Auto	Go Mode	Auto	Go Mode	Auto	Go Mode	Auto
Radio Input	dio Input 1	Radio Input	dio Input 1	Radio Input	dio Input 1	Radio Input	dio Input 1	Radio Input	dio Input 1	Radio Input	dio Input 1	Radio Input	dio Input 1	Radio Input	dio Input 1
Hard Wire Input		Hard Wire Input		Hard Wire Input		Hard Wire Input		Hard Wire Input		Hard Wire Input		Hard Wire Input		Hard Wire Input	
BIT	N/A	BIT	N/A	BIT	N/A	BIT	N/A	BIT	N/A	BIT	N/A	BIT	N/A	BIT	N/A
STEP ACTION		STEP ACTION		STEP ACTION		STEP ACTION		STEP ACTION		STEP ACTION		STEP ACTION		STEP ACTION	
Function	Rotate	Function	Forward	Function	Rotate	Function	Forward	Function	Rotate	Function	Forward	Function	Rotate	Function	Forward
Speed	33	Speed	33	Speed	33	Speed	33	Speed	33	Speed	33	Speed	33	Speed	33
Navigation	DR	Navigation	DR	Navigation	DR	Navigation	DR	Navigation	DR	Navigation	DR	Navigation	DR	Navigation	DR
Direction	Center	Direction	Center	Direction	Center	Direction	Center	Direction	Center	Direction	Center	Direction	Center	Direction	Center
Size	90	Size	1240	Size	-90	Size	2284	Size	90	Size	511	Size	90	Size	274
Loss Of Guidance	N/A	Loss Of Guidance	N/A	Loss Of Guidance	N/A	Loss Of Guidance	N/A	Loss Of Guidance	N/A	Loss Of Guidance	N/A	Loss Of Guidance	N/A	Loss Of Guidance	N/A
Obstacle Avoidance	1	Obstacle Avoidance	1	Obstacle Avoidance	1	Obstacle Avoidance	1	Obstacle Avoidance	1	Obstacle Avoidance	1	Obstacle Avoidance	1	Obstacle Avoidance	1
Output	N/a	Output	N/a	Output	N/a	Output	N/a	Output	N/a	Output	N/a	Output	N/a	Output	N/a
END OF STEP		END OF STEP		END OF STEP		END OF STEP		END OF STEP		END OF STEP		END OF STEP		END OF STEP	
END MODE	Distance	END MODE	Distance	END MODE	Distance	END MODE	Distance	END MODE	Distance	END MODE	Distance	END MODE	Distance	END MODE	Distance
END ACTION	Merge	END ACTION	Merge	END ACTION	Merge	END ACTION	Merge	END ACTION	Merge	END ACTION	Merge	END ACTION	Merge	END ACTION	Merge
NEXT ROUTE	14	NEXT ROUTE	14	NEXT ROUTE	14	NEXT ROUTE	14	NEXT ROUTE	14	NEXT ROUTE	14	NEXT ROUTE	14	NEXT ROUTE	14
NEXT STEP	50	NEXT STEP	51	NEXT STEP	52	NEXT STEP	53	NEXT STEP	54	NEXT STEP	55	NEXT STEP	56	NEXT STEP	57

Route 14:57		Route 14:58		Route 14:59		Route 14:60		Route 14:61		Route 14:62		Route 14:63		Route 14:64	
STEP INITIATION		STEP INITIATION		STEP INITIATION		STEP INITIATION		STEP INITIATION		STEP INITIATION		STEP INITIATION		STEP INITIATION	
Go Mode	Auto	Go Mode	Auto	Go Mode	Auto	Go Mode	Auto	Go Mode	Auto	Go Mode	Auto	Go Mode	Auto	Go Mode	Auto
Radio Input	dio Input 1	Radio Input	dio Input 1	Radio Input	dio Input 1	Radio Input	dio Input 1	Radio Input	dio Input 1	Radio Input	dio Input 1	Radio Input	dio Input 1	Radio Input	dio Input 1
Hard Wire Input		Hard Wire Input		Hard Wire Input		Hard Wire Input		Hard Wire Input		Hard Wire Input		Hard Wire Input		Hard Wire Input	
BIT	N/A	BIT	N/A	BIT	N/A	BIT	N/A	BIT	N/A	BIT	N/A	BIT	N/A	BIT	N/A
STEP ACTION		STEP ACTION		STEP ACTION		STEP ACTION		STEP ACTION		STEP ACTION		STEP ACTION		STEP ACTION	
Function	Rotate	Function	Reverse	Function	Dellay	Function	Forward	Function	Rotate	Function	Forward	Function	Rotate	Function	Forward
Speed	33	Speed	33	Speed	33	Speed	33	Speed	33	Speed	33	Speed	33	Speed	33
Navigation	DR	Navigation	DR	Navigation	DR	Navigation	DR	Navigation	DR	Navigation	DR	Navigation	DR	Navigation	DR
Direction	Center	Direction	Center	Direction	Center	Direction	Center	Direction	Center	Direction	Center	Direction	Center	Direction	Center
Size	-90	Size	62	Size	5	Size	62	Size	-90	Size	274	Size	-90	Size	511
Loss Of Guidance	N/A	Loss Of Guidance	N/A	Loss Of Guidance	N/A	Loss Of Guidance	N/A	Loss Of Guidance	N/A	Loss Of Guidance	N/A	Loss Of Guidance	N/A	Loss Of Guidance	N/A
Obstacle Avoidance	1	Obstacle Avoidance	1	Obstacle Avoidance	1	Obstacle Avoidance	1	Obstacle Avoidance	1	Obstacle Avoidance	1	Obstacle Avoidance	1	Obstacle Avoidance	1
Output	N/a	Output	N/a	Output	#7 Pin Drop	Output		Output		Output		Output		Output	
END OF STEP		END OF STEP		END OF STEP		END OF STEP		END OF STEP		END OF STEP		END OF STEP		END OF STEP	
END MODE	Distance	END MODE	Distance	END MODE	time	END MODE	Distance	END MODE	Distance	END MODE	Distance	END MODE	Distance	END MODE	Distance
END ACTION	Merge	END ACTION	Merge	END ACTION	Merge	END ACTION	Merge	END ACTION	Merge	END ACTION	Merge	END ACTION	Merge	END ACTION	Merge
NEXT ROUTE	14	NEXT ROUTE	14	NEXT ROUTE	14	NEXT ROUTE	14	NEXT ROUTE	14	NEXT ROUTE	14	NEXT ROUTE	14	NEXT ROUTE	14
NEXT STEP	58	NEXT STEP	59	NEXT STEP	60	NEXT STEP	61	NEXT STEP	62	NEXT STEP	63	NEXT STEP	64	NEXT STEP	65

Route 14:65		Route 14:66		Route 14:67		Route 14:68		Route 14:69		Route 14:70		Route 14:71		Route 14:72	
STEP INITIATION		**STEP INITIATION**		**STEP INITIATION**		**STEP INITIATION**		**STEP INITIATION**		**STEP INITIATION**		**STEP INITIATION**		**STEP INITIATION**	
Go Mode	Auto	**Go Mode**	Auto	**Go Mode**	Auto	**Go Mode**	Auto	**Go Mode**	Auto	**Go Mode**	Auto	**Go Mode**	Auto	**Go Mode**	Auto
Radio Input	dio Input 1-	**Radio Input**	dio Input 1-	**Radio Input**	dio Input 1-	**Radio Input**	dio Input 1-	**Radio Input**	dio Input 1-	**Radio Input**	dio Input 1-	**Radio Input**	dio Input 1-	**Radio Input**	dio Input 1-
Hard Wire Input		**Hard Wire Input**		**Hard Wire Input**	N/a	**Hard Wire Input**	N/a	**Hard Wire Input**	N/a	**Hard Wire Input**	N/a	**Hard Wire Input**	N/a	**Hard Wire Input**	N/a
BIT	N/A	**BIT**	N/A	**BIT**	N/A	**BIT**	N/A	**BIT**	N/A	**BIT**	N/A	**BIT**	N/A	**BIT**	N/A
STEP ACTION		**STEP ACTION**		**STEP ACTION**		**STEP ACTION**		**STEP ACTION**		**STEP ACTION**		**STEP ACTION**		**STEP ACTION**	
Function	Rotate	**Function**	Forward	**Function**	Rotate	**Function**	Forward	**Function**	Rotate	**Function**	Forward	**Function**	Rotate	**Function**	Forward
Speed	33	**Speed**	33	**Speed**	33	**Speed**	33	**Speed**	33	**Speed**	33	**Speed**	33	**Speed**	33
Navigation	DR	**Navigation**	DR	**Navigation**	DR	**Navigation**	DR	**Navigation**	DR	**Navigation**	DR	**Navigation**	DR	**Navigation**	DR
Direction	Center	**Direction**	Center	**Direction**	Center	**Direction**	Center	**Direction**	Center	**Direction**	Center	**Direction**	Center	**Direction**	Center
Size	-90	**Size**	2284	**Size**	90	**Size**	962	**Size**	-90	**Size**	525	**Size**	90	**Size**	417
Loss Of Guidance	N/A	**Loss Of Guidance**	N/A	**Loss Of Guidance**	N/A	**Loss Of Guidance**	N/A	**Loss Of Guidance**	N/A	**Loss Of Guidance**	N/A	**Loss Of Guidance**	N/A	**Loss Of Guidance**	N/A
Obstacle Avoidance	1	**Obstacle Avoidance**	1	**Obstacle Avoidance**	1	**Obstacle Avoidance**	1	**Obstacle Avoidance**	1	**Obstacle Avoidance**	1	**Obstacle Avoidance**	1	**Obstacle Avoidance**	1
Output		**Output**		**Output**	N/a	**Output**	N/a	**Output**	N/a	**Output**	N/a	**Output**	N/a	**Output**	N/a
END OF STEP		**END OF STEP**		**END OF STEP**		**END OF STEP**		**END OF STEP**		**END OF STEP**		**END OF STEP**		**END OF STEP**	
END MODE	Distance	**END MODE**	Distance	**END MODE**	Distance	**END MODE**	Distance	**END MODE**	Distance	**END MODE**	Distance	**END MODE**	Distance	**END MODE**	Distance
END ACTION	Merge	**END ACTION**	Merge	**END ACTION**	Merge	**END ACTION**	Merge	**END ACTION**	Merge	**END ACTION**	Merge	**END ACTION**	Merge	**END ACTION**	Merge
NEXT ROUTE	14	**NEXT ROUTE**	14	**NEXT ROUTE**	14	**NEXT ROUTE**	14	**NEXT ROUTE**	14	**NEXT ROUTE**	14	**NEXT ROUTE**	14	**NEXT ROUTE**	14
NEXT STEP	**66**	**NEXT STEP**	**67**	**NEXT STEP**	**68**	**NEXT STEP**	**69**	**NEXT STEP**	**70**	**NEXT STEP**	**71**	**NEXT STEP**	**72**	**NEXT STEP**	**73**

Route 14:73		Route 14:74		Route 0: 1	
STEP INITIATION		**STEP INITIATION**		**STEP INITIATION**	
Go Mode	Auto	**Go Mode**	Auto	**Go Mode**	nput Trigge
Radio Input	dio Input 1-	**Radio Input**	dio Input 1-	**Radio Input**	dio Input 1-
Hard Wire Input	N/a	**Hard Wire Input**	N/a	**Hard Wire Input**	N/a
BIT	N/A	**BIT**	N/A	**BIT**	BIT #1-#24
STEP ACTION		**STEP ACTION**		**STEP ACTION**	
Function	Rotate	**Function**	Reverse	**Function**	Auto
Speed	33	**Speed**	33	**Speed**	33
Navigation	DR	**Navigation**	DR	**Navigation**	DR
Direction	Center	**Direction**	Center	**Direction**	Center
Size	-90	**Size**	66	**Size**	66
Loss Of Guidance	N/A	**Loss Of Guidance**	N/A	**Loss Of Guidance**	N/A
Obstacle Avoidance	1	**Obstacle Avoidance**	1	**Obstacle Avoidance**	1
Output	N/a	**Output**	N/a	**Output**	N/a
END OF STEP		**END OF STEP**		**END OF STEP**	
END MODE	Distance	**END MODE**	Distance	**END MODE**	Distance
END ACTION	Merge	**END ACTION**	Merge	**END ACTION**	Merge
NEXT ROUTE	14	**NEXT ROUTE**	0	**NEXT ROUTE**	0
NEXT STEP	**74**	**NEXT STEP**	1	**NEXT STEP**	1

Tier 3 Route 15

Route 15:1		Route 15:2		Route 15:3		Route 15:4		Route 15:5		Route 15:6		Route 15:7		Route 15:8	
STEP INITIATION		**STEP INITIATION**		**STEP INITIATION**		**STEP INITIATION**		**STEP INITIATION**		**STEP INITIATION**		**STEP INITIATION**		**STEP INITIATION**	
Go Mode	nput Triggers	**Go Mode**	Auto	**Go Mode**	Auto	**Go Mode**	Auto	**Go Mode**	Auto	**Go Mode**	Auto	**Go Mode**	Auto	**Go Mode**	Auto
Radio Input	adio Input 1-2	**Radio Input**	dio Input 1-	**Radio Input**	dio Input 1-	**Radio Input**	dio Input 1-	**Radio Input**	dio Input 1-	**Radio Input**	dio Input 1-	**Radio Input**	dio Input 1-	**Radio Input**	dio Input 1-
Hard Wire Input	N/A	**Hard Wire Input**	N/A	**Hard Wire Input**	N/A	**Hard Wire Input**	N/A	**Hard Wire Input**	N/A	**Hard Wire Input**	N/A	**Hard Wire Input**	N/A	**Hard Wire Input**	N/A
BIT	Bit #1 off	**BIT**	N/A	**BIT**	N/A	**BIT**	N/A	**BIT**	N/A	**BIT**	N/A	**BIT**	N/A	**BIT**	N/A
Bit#11 On, #22 On	it #5 and 6 Off														
Home Position RFID	it #7 and 9 of														
	t #8 and 10 o														
STEP ACTION		**STEP ACTION**		**STEP ACTION**		**STEP ACTION**		**STEP ACTION**		**STEP ACTION**		**STEP ACTION**		**STEP ACTION**	
Function	Dispatch	**Function**	Forward	**Function**	Rotate	**Function**	Forward	**Function**	Rotate	**Function**	Forward	**Function**	Rotate	**Function**	Forward
Speed	N/A	**Speed**	33	**Speed**	33	**Speed**	33	**Speed**	33	**Speed**	33	**Speed**	33	**Speed**	33
Navigation	N/A	**Navigation**	DR	**Navigation**	DR	**Navigation**	DR	**Navigation**	DR	**Navigation**	DR	**Navigation**	DR	**Navigation**	DR
Direction	N/A	**Direction**	Center	**Direction**	Center	**Direction**	Center	**Direction**	Center	**Direction**	Center	**Direction**	Center	**Direction**	Center
Size	N/A	**Size**	66	**Size**	-90	**Size**	417	**Size**	-90	**Size**	525	**Size**	90	**Size**	962
Loss Of Guidance	N/A	**Loss Of Guidance**	N/A	**Loss Of Guidance**	N/A	**Loss Of Guidance**	N/A	**Loss Of Guidance**	N/A	**Loss Of Guidance**	N/A	**Loss Of Guidance**	N/A	**Loss Of Guidance**	N/A
Obstacle Avoidance	N/A	**Obstacle Avoidance**	1	**Obstacle Avoidance**	1	**Obstacle Avoidance**	1	**Obstacle Avoidance**	1	**Obstacle Avoidance**	1	**Obstacle Avoidance**	1	**Obstacle Avoidance**	1
Output	N/A	**Output**	N/A	**Output**	N/A	**Output**	N/A	**Output**	N/A	**Output**	N/A	**Output**	N/A	**Output**	N/A
END OF STEP		**END OF STEP**		**END OF STEP**		**END OF STEP**		**END OF STEP**		**END OF STEP**		**END OF STEP**		**END OF STEP**	
END MODE	N/A	**END MODE**	Distance	**END MODE**	Distance	**END MODE**	Distance	**END MODE**	Distance	**END MODE**	Distance	**END MODE**	Distance	**END MODE**	Distance
END ACTION	e Bit #11, #2	**END ACTION**	Merge	**END ACTION**	Merge	**END ACTION**	Merge	**END ACTION**	Merge	**END ACTION**	Merge	**END ACTION**	Merge	**END ACTION**	Merge
NEXT ROUTE	15	**NEXT ROUTE**	15	**NEXT ROUTE**	15	**NEXT ROUTE**	15	**NEXT ROUTE**	15	**NEXT ROUTE**	15	**NEXT ROUTE**	15	**NEXT ROUTE**	15
NEXT STEP	**2**	**NEXT STEP**	**3**	**NEXT STEP**	**4**	**NEXT STEP**	**5**	**NEXT STEP**	**6**	**NEXT STEP**	**7**	**NEXT STEP**	**8**	**NEXT STEP**	**9**

Route 15:9		Route 15:10		Route 15:11		Route 15:12		Route 15:13		Route 15:14		Route 15:15		Route 15:16	
STEP INITIATION		**STEP INITIATION**		**STEP INITIATION**		**STEP INITIATION**		**STEP INITIATION**		**STEP INITIATION**		**STEP INITIATION**		**STEP INITIATION**	
Go Mode	Auto	**Go Mode**	Auto	**Go Mode**	Auto	**Go Mode**	Auto	**Go Mode**	Auto	**Go Mode**	Auto	**Go Mode**	Auto	**Go Mode**	Auto
Radio Input	dio Input 1-	**Radio Input**	dio Input 1-	**Radio Input**	dio Input 1-	**Radio Input**	dio Input 1-	**Radio Input**	dio Input 1-	**Radio Input**	dio Input 1-	**Radio Input**	dio Input 1-	**Radio Input**	dio Input 1-
Hard Wire Input	N/A	**Hard Wire Input**	N/A	**Hard Wire Input**	N/A	**Hard Wire Input**	N/A	**Hard Wire Input**	N/A	**Hard Wire Input**	N/A	**Hard Wire Input**	N/A	**Hard Wire Input**	N/A
BIT	N/A	**BIT**	N/A	**BIT**	N/A	**BIT**	N/A	**BIT**	N/A	**BIT**	N/A	**BIT**	N/A	**BIT**	N/A
STEP ACTION		**STEP ACTION**		**STEP ACTION**		**STEP ACTION**		**STEP ACTION**		**STEP ACTION**		**STEP ACTION**		**STEP ACTION**	
Function	Rotate	**Function**	Forward	**Function**	Rotate	**Function**	Forward	**Function**	Rotate	**Function**	Forward	**Function**	Rotate	**Function**	Reverse
Speed	33	**Speed**	33	**Speed**	33	**Speed**	33	**Speed**	33	**Speed**	33	**Speed**	33	**Speed**	33
Navigation	DR	**Navigation**	DR	**Navigation**	DR	**Navigation**	DR	**Navigation**	DR	**Navigation**	DR	**Navigation**	DR	**Navigation**	DR
Direction	Center	**Direction**	Center	**Direction**	Center	**Direction**	Center	**Direction**	Center	**Direction**	Center	**Direction**	Center	**Direction**	Center
Size	-90	**Size**	2284	**Size**	90	**Size**	511	**Size**	90	**Size**	144	**Size**	90	**Size**	62
Loss Of Guidance	N/A	**Loss Of Guidance**	N/A	**Loss Of Guidance**	N/A	**Loss Of Guidance**	N/A	**Loss Of Guidance**	N/A	**Loss Of Guidance**	N/A	**Loss Of Guidance**	N/A	**Loss Of Guidance**	N/A
Obstacle Avoidance	1	**Obstacle Avoidance**	1	**Obstacle Avoidance**	1	**Obstacle Avoidance**	1	**Obstacle Avoidance**	1	**Obstacle Avoidance**	1	**Obstacle Avoidance**	1	**Obstacle Avoidance**	1
Output	N/A	**Output**	N/A	**Output**	N/A	**Output**	N/A	**Output**	N/A	**Output**	N/A	**Output**	N/A	**Output**	#6 Pin Up
END OF STEP		**END OF STEP**		**END OF STEP**		**END OF STEP**		**END OF STEP**		**END OF STEP**		**END OF STEP**		**END OF STEP**	
END MODE	Distance	**END MODE**	Distance	**END MODE**	Distance	**END MODE**	Distance	**END MODE**	Distance	**END MODE**	Distance	**END MODE**	Distance	**END MODE**	Distance
END ACTION	Merge	**END ACTION**	Merge	**END ACTION**	Merge	**END ACTION**	Merge	**END ACTION**	Merge	**END ACTION**	Merge	**END ACTION**	Merge	**END ACTION**	Merge
NEXT ROUTE	15	**NEXT ROUTE**	15	**NEXT ROUTE**	15	**NEXT ROUTE**	15	**NEXT ROUTE**	15	**NEXT ROUTE**	15	**NEXT ROUTE**	15	**NEXT ROUTE**	15
NEXT STEP	**10**	**NEXT STEP**	**11**	**NEXT STEP**	**12**	**NEXT STEP**	**13**	**NEXT STEP**	**14**	**NEXT STEP**	**15**	**NEXT STEP**	**16**	**NEXT STEP**	**17**

Route 15:17		Route 15:18		Route 15:19		Route 15:20		Route 15:21		Route 15:22		Route 15:23		Route 15:24	
STEP INITIATION		**STEP INITIATION**		**STEP INITIATION**		**STEP INITIATION**		**STEP INITIATION**		**STEP INITIATION**		**STEP INITIATION**		**STEP INITIATION**	
Go Mode	Auto	**Go Mode**	Auto	**Go Mode**	Auto	**Go Mode**	Auto	**Go Mode**	Auto	**Go Mode**	Auto	**Go Mode**	Auto	**Go Mode**	Auto
Radio Input	dio Input 1-	**Radio Input**	dio Input 1-	**Radio Input**	dio Input 1-	**Radio Input**	dio Input 1-	**Radio Input**	dio Input 1-	**Radio Input**	dio Input 1-	**Radio Input**	dio Input 1-	**Radio Input**	dio Input 1-
Hard Wire Input	N/A	**Hard Wire Input**	N/A	**Hard Wire Input**	N/A	**Hard Wire Input**	N/A	**Hard Wire Input**	N/A	**Hard Wire Input**	N/A	**Hard Wire Input**	N/A	**Hard Wire Input**	N/A
BIT	N/A	**BIT**	N/A	**BIT**	N/A	**BIT**	N/A	**BIT**	N/A	**BIT**	N/A	**BIT**	N/A	**BIT**	N/A
STEP ACTION		**STEP ACTION**		**STEP ACTION**		**STEP ACTION**		**STEP ACTION**		**EP ACTION**		**STEP ACTION**		**STEP ACTION**	
Function	Forward	**Function**	Rotate	**Function**	Forward	**Function**	Rotate	**Function**	Forward	**Function**	Rotate	**Function**	Forward	**Function**	Rotate
Speed	33	**Speed**	33	**Speed**	33	**Speed**	33	**Speed**	33	**Speed**	33	**Speed**	33	**Speed**	33
Navigation	DR	**Navigation**	DR	**Navigation**	DR	**Navigation**	DR	**Navigation**	DR	**Navigation**	DR	**Navigation**	DR	**Navigation**	DR
Direction	Center	**Direction**	Center	**Direction**	Center	**Direction**	Center	**Direction**	Center	**Direction**	Center	**Direction**	Center	**Direction**	Center
Size	62	**Size**	90	**Size**	144	**Size**	-90	**Size**	511	**Size**	-90	**Size**	2284	**Size**	90
Loss Of Guidance	N/A	**Loss Of Guidance**	N/A	**Loss Of Guidance**	N/A	**Loss Of Guidance**	N/A	**Loss Of Guidance**	N/A	**Loss Of Guidance**	N/A	**Loss Of Guidance**	N/A	**Loss Of Guidance**	N/A
Obstacle Avoidance	1	**Obstacle Avoidance**	1	**Obstacle Avoidance**	1	**Obstacle Avoidance**	1	**Obstacle Avoidance**	1	**Obstacle Avoidance**	1	**Obstacle Avoidance**	1	**Obstacle Avoidance**	1
Output	N/A	**Output**	N/A	**Output**	N/A	**Output**	N/A	**Output**	N/A	**Output**	N/A	**Output**	N/A	**Output**	N/A
END OF STEP		**END OF STEP**		**END OF STEP**		**END OF STEP**		**END OF STEP**		**ID OF STEP**		**END OF STEP**		**END OF STEP**	
END MODE	Distance	**END MODE**	Distance	**END MODE**	Distance	**END MODE**	Distance	**END MODE**	Distance	**END MODE**	Distance	**END MODE**	Distance	**END MODE**	Distance
END ACTION	Merge	**END ACTION**	Merge	**END ACTION**	Merge	**END ACTION**	Merge	**END ACTION**	Merge	**END ACTION**	Merge	**END ACTION**	Merge	**END ACTION**	Merge
NEXT ROUTE	15	**NEXT ROUTE**	15	**NEXT ROUTE**	15	**NEXT ROUTE**	15	**NEXT ROUTE**	15	**NEXT ROUTE**	15	**NEXT ROUTE**	15	**NEXT ROUTE**	15
NEXT STEP	**18**	**NEXT STEP**	**19**	**NEXT STEP**	**20**	**NEXT STEP**	**21**	**NEXT STEP**	**22**	**NEXT STEP**	**23**	**NEXT STEP**	**24**	**NEXT STEP**	**25**

Route 15:25		Route 15:26		Route 15:27		Route 15:28		Route 15:29		Route 15:30		Route 15:31		Route 15:32	
STEP INITIATION		**STEP INITIATION**		**STEP INITIATION**		**STEP INITIATION**		**STEP INITIATION**		**STEP INITIATION**		**STEP INITIATION**		**STEP INITIATION**	
Go Mode	Auto	**Go Mode**	Auto	**Go Mode**	Auto	**Go Mode**	Auto	**Go Mode**	Auto	**Go Mode**	Auto	**Go Mode**	Auto	**Go Mode**	Auto
Radio Input	dio Input 1-	**Radio Input**	dio Input 1-	**Radio Input**	dio Input 1-	**Radio Input**	dio Input 1-	**Radio Input**	dio Input 1-	**Radio Input**	dio Input 1-	**Radio Input**	dio Input 1-	**Radio Input**	dio Input 1-
Hard Wire Input	N/A	**Hard Wire Input**	N/A	**Hard Wire Input**	N/A	**Hard Wire Input**	N/A	**Hard Wire Input**	N/A	**Hard Wire Input**	N/A	**Hard Wire Input**	N/A	**Hard Wire Input**	Cart prese
BIT	N/A	**BIT**	N/A	**BIT**	N/A	**BIT**	N/A	**BIT**	N/A	**BIT**	N/A	**BIT**	N/A	**BIT**	N/A
STEP ACTION		**STEP ACTION**		**STEP ACTION**		**STEP ACTION**		**STEP ACTION**		**STEP ACTION**		**STEP ACTION**		**STEP ACTION**	
Function	Forward	**Function**	Rotate	**Function**	Reverse	**Function**	Delay	**Function**	Forward	**Function**	Rotate	**Function**	Reverse	**Function**	Forward
Speed	33	**Speed**	33	**Speed**	33	**Speed**	33	**Speed**	33	**Speed**	33	**Speed**	33	**Speed**	33
Navigation	DR	**Navigation**	DR	**Navigation**	DR	**Navigation**	DR	**Navigation**	DR	**Navigation**	DR	**Navigation**	DR	**Navigation**	DR
Direction	Center	**Direction**	Center	**Direction**	Center	**Direction**	Center	**Direction**	Center	**Direction**	Center	**Direction**	Center	**Direction**	Center
Size	1240	**Size**	90	**Size**	279	**Size**	5	**Size**	104	**Size**	-90	**Size**	102	**Size**	102
Loss Of Guidance	N/A	**Loss Of Guidance**	N/A	**Loss Of Guidance**	N/A	**Loss Of Guidance**	N/A	**Loss Of Guidance**	N/A	**Loss Of Guidance**	N/A	**Loss Of Guidance**	N/A	**Loss Of Guidance**	N/A
Obstacle Avoidance	1	**Obstacle Avoidance**	1	**Obstacle Avoidance**	1	**Obstacle Avoidance**	1	**Obstacle Avoidance**	1	**Obstacle Avoidance**	1	**Obstacle Avoidance**	1	**Obstacle Avoidance**	1
Output	N/A	**Output**	N/A	**Output**	N/A	**Output**	#7 Pin Drop	**Output**		**Output**		**Output**	#6 pin up	**Output**	N/a
END OF STEP		**END OF STEP**		**END OF STEP**		**END OF STEP**		**END OF STEP**		**END OF STEP**		**END OF STEP**		**END OF STEP**	
END MODE	Distance	**END MODE**	Distance	**END MODE**	Distance	**END MODE**	time	**END MODE**	Distance	**END MODE**	Distance	**END MODE**	Distance	**END MODE**	Distance
END ACTION	Merge	**END ACTION**	Merge	**END ACTION**	Merge	**END ACTION**	Merge	**END ACTION**	Merge	**END ACTION**	Merge	**END ACTION**	Merge	**END ACTION**	Merge
NEXT ROUTE	15	**NEXT ROUTE**	15	**NEXT ROUTE**	15	**NEXT ROUTE**	15	**NEXT ROUTE**	15	**NEXT ROUTE**	15	**NEXT ROUTE**	15	**NEXT ROUTE**	15
NEXT STEP	**26**	**NEXT STEP**	**27**	**NEXT STEP**	**28**	**NEXT STEP**	**29**	**NEXT STEP**	**30**	**NEXT STEP**	**31**	**NEXT STEP**	**32**	**NEXT STEP**	**33**

Route 15:33		Route 15:34		Route 15:35		Route 15:36		Route 15:37		Route 15:38		Route 15:39		Route 15:40	
STEP INITIATION		STEP INITIATION		STEP INITIATION		STEP INITIATION		STEP INITIATION		STEP INITIATION		STEP INITIATION		STEP INITIATION	
Go Mode	Auto	Go Mode	Auto	Go Mode	Auto	Go Mode	Auto	Go Mode	Auto	Go Mode	Auto	Go Mode	Auto	Go Mode	Auto
Radio Input	dio Input 1	Radio Input	dio Input 1	Radio Input	dio Input 1	Radio Input	dio Input 1	Radio Input	dio Input 1	Radio Input	dio Input 1	Radio Input	dio Input 1	Radio Input	dio Input 1
Hard Wire Input	N/A	Hard Wire Input	N/A	Hard Wire Input	N/A	Hard Wire Input	N/A	Hard Wire Input	N/A	Hard Wire Input	N/A	Hard Wire Input	N/A	Hard Wire Input	N/A
BIT	N/A	BIT	N/A	BIT	N/A	BIT	N/A	BIT	N/A	BIT	N/A	BIT	N/A	BIT	N/A
STEP ACTION		STEP ACTION		STEP ACTION		STEP ACTION		STEP ACTION		STEP ACTION		STEP ACTION		STEP ACTION	
Function	Rotate	Function	Reverse	Function	Delay	Function	Forward	Function	Rotate	Function	Reverse	Function	Forward	Function	Rotate
Speed	33	Speed	33	Speed	33	Speed	33	Speed	33	Speed	33	Speed	33	Speed	33
Navigation	DR	Navigation	DR	Navigation	DR	Navigation	DR	Navigation	DR	Navigation	DR	Navigation	DR	Navigation	DR
Direction	Center	Direction	Center	Direction	Center	Direction	Center	Direction	Center	Direction	Center	Direction	Center	Direction	Center
Size	45	Size	99	Size	5	Size	99	Size	45	Size	104	Size	104	Size	-90
Loss Of Guidance	N/A	Loss Of Guidance	N/A	Loss Of Guidance	N/A	Loss Of Guidance	N/A	Loss Of Guidance	N/A	Loss Of Guidance	N/A	Loss Of Guidance	N/A	Loss Of Guidance	N/A
Obstacle Avoidance	1	Obstacle Avoidance	1	Obstacle Avoidance	1	Obstacle Avoidance	1	Obstacle Avoidance	1	Obstacle Avoidance	1	Obstacle Avoidance	1	Obstacle Avoidance	1
Output	N/a	Output	N/a	Output	#7 pin drop	Output	N/a	Output	N/a	Output	#7 pin raise	Output	N/A	Output	N/A
END OF STEP		END OF STEP		END OF STEP		END OF STEP		END OF STEP		END OF STEP		END OF STEP		END OF STEP	
END MODE	Distance	END MODE	Distance	END MODE	time	END MODE	Distance	END MODE	Distance	END MODE	Distance	END MODE	Distance	END MODE	Distance
END ACTION	Merge	END ACTION	Merge	END ACTION	Merge	END ACTION	Merge	END ACTION	Merge	END ACTION	Merge	END ACTION	Merge	END ACTION	Merge
NEXT ROUTE	15	NEXT ROUTE	15	NEXT ROUTE	15	NEXT ROUTE	15	NEXT ROUTE	15	NEXT ROUTE	15	NEXT ROUTE	15	NEXT ROUTE	15
NEXT STEP	34	NEXT STEP	35	NEXT STEP	36	NEXT STEP	37	NEXT STEP	38	NEXT STEP	39	NEXT STEP	40	NEXT STEP	41

Route 15:41		Route 15:42		Route 15:43		Route 15:44		Route 15:45		Route 15:46		Route 15:47		Route 15:48	
STEP INITIATION		STEP INITIATION		STEP INITIATION		STEP INITIATION		STEP INITIATION		STEP INITIATION		STEP INITIATION		STEP INITIATION	
Go Mode	Auto	Go Mode	Auto	Go Mode	Auto	Go Mode	Auto	Go Mode	Auto	Go Mode	Auto	Go Mode	Auto	Go Mode	Auto
Radio Input	dio Input 1	Radio Input	dio Input 1	Radio Input	dio Input 1	Radio Input	dio Input 1	Radio Input	dio Input 1	Radio Input	dio Input 1	Radio Input	dio Input 1	Radio Input	dio Input 1
Hard Wire Input	N/A	Hard Wire Input	N/A	Hard Wire Input	N/A	Hard Wire Input	N/A	Hard Wire Input	N/A	Hard Wire Input	Cart Prese	Hard Wire Input		Hard Wire Input	
BIT	N/A	BIT	N/A	BIT	N/A	BIT	N/A	BIT	N/A	BIT	N/A	BIT	N/A	BIT	N/A
STEP ACTION		STEP ACTION		STEP ACTION		STEP ACTION		STEP ACTION		STEP ACTION		STEP ACTION		STEP ACTION	
Function	Reverse	Function	Delay	Function	Forward	Function	Rotate	Function	Reverse	Function	Forward	Function	Rotate	Function	Forward
Speed	33	Speed	33	Speed	33	Speed	33	Speed	33	Speed	33	Speed	33	Speed	33
Navigation	DR	Navigation	DR	Navigation	DR	Navigation	DR	Navigation	DR	Navigation	DR	Navigation	DR	Navigation	DR
Direction	Center	Direction	Center	Direction	Center	Direction	Center	Direction	Center	Direction	Center	Direction	Center	Direction	Center
Size	102	Size	5	Size	102	Size	45	Size	99	Size	99	Size	45	Size	174
Loss Of Guidance	N/A	Loss Of Guidance	N/A	Loss Of Guidance	N/A	Loss Of Guidance	N/A	Loss Of Guidance	N/A	Loss Of Guidance	N/A	Loss Of Guidance	N/A	Loss Of Guidance	N/A
Obstacle Avoidance	1	Obstacle Avoidance	1	Obstacle Avoidance	1	Obstacle Avoidance	1	Obstacle Avoidance	1	Obstacle Avoidance	1	Obstacle Avoidance	1	Obstacle Avoidance	1
Output	N/A	Output	#7 Pin Drop	Output	N/a	Output	N/a	Output	#6 Pin Raise	Output	N/a	Output	N/a	Output	N/a
END OF STEP		END OF STEP		END OF STEP		END OF STEP		END OF STEP		END OF STEP		END OF STEP		END OF STEP	
END MODE	Distance	END MODE	Time	END MODE	Distance	END MODE	Distance	END MODE	Distance	END MODE	Distance	END MODE	Distance	END MODE	Distance
END ACTION	Merge	END ACTION	Merge	END ACTION	Merge	END ACTION	Merge	END ACTION	Merge	END ACTION	Merge	END ACTION	Merge	END ACTION	Merge
NEXT ROUTE	15	NEXT ROUTE	15	NEXT ROUTE	15	NEXT ROUTE	15	NEXT ROUTE	15	NEXT ROUTE	15	NEXT ROUTE	15	NEXT ROUTE	15
NEXT STEP	42	NEXT STEP	43	NEXT STEP	44	NEXT STEP	45	NEXT STEP	46	NEXT STEP	47	NEXT STEP	48	NEXT STEP	49

Route 15:49		Route 15:50		Route 15:51		Route 15:52		Route 15:53		Route 15:54		Route 15:55		Route 15:56	
STEP INITIATION		STEP INITIATION		STEP INITIATION		STEP INITIATION		STEP INITIATION		STEP INITIATION		STEP INITIATION		STEP INITIATION	
Go Mode	Auto	Go Mode	Auto	Go Mode	Auto	Go Mode	Auto	Go Mode	Auto	Go Mode	Auto	Go Mode	Auto	Go Mode	Auto
Radio Input	dio Input 1	Radio Input	dio Input 1	Radio Input	dio Input 1	Radio Input	dio Input 1	Radio Input	dio Input 1	Radio Input	dio Input 1	Radio Input	dio Input 1	Radio Input	dio Input 1
Hard Wire Input		Hard Wire Input		Hard Wire Input		Hard Wire Input		Hard Wire Input		Hard Wire Input		Hard Wire Input		Hard Wire Input	
BIT	N/A	BIT	N/A	BIT	N/A	BIT	N/A	BIT	N/A	BIT	N/A	BIT	N/A	BIT	N/A
STEP ACTION		STEP ACTION		STEP ACTION		STEP ACTION		STEP ACTION		STEP ACTION		STEP ACTION		STEP ACTION	
Function	Rotate	Function	Forward	Function	Rotate	Function	Forward	Function	Rotate	Function	Forward	Function	Rotate	Function	Forward
Speed	33	Speed	33	Speed	33	Speed	33	Speed	33	Speed	33	Speed	33	Speed	33
Navigation	DR	Navigation	DR	Navigation	DR	Navigation	DR	Navigation	DR	Navigation	DR	Navigation	DR	Navigation	DR
Direction	Center	Direction	Center	Direction	Center	Direction	Center	Direction	Center	Direction	Center	Direction	Center	Direction	Center
Size	90	Size	1240	Size	-90	Size	2284	Size	90	Size	511	Size	90	Size	144
Loss Of Guidance	N/A	Loss Of Guidance	N/A	Loss Of Guidance	N/A	Loss Of Guidance	N/A	Loss Of Guidance	N/A	Loss Of Guidance	N/A	Loss Of Guidance	N/A	Loss Of Guidance	N/A
Obstacle Avoidance	1	Obstacle Avoidance	1	Obstacle Avoidance	1	Obstacle Avoidance	1	Obstacle Avoidance	1	Obstacle Avoidance	1	Obstacle Avoidance	1	Obstacle Avoidance	1
Output	N/a	Output	N/a	Output	N/a	Output	N/a	Output	N/a	Output	N/a	Output	N/a	Output	N/a
END OF STEP		END OF STEP		END OF STEP		END OF STEP		END OF STEP		END OF STEP		END OF STEP		END OF STEP	
END MODE	Distance	END MODE	Distance	END MODE	Distance	END MODE	Distance	END MODE	Distance	END MODE	Distance	END MODE	Distance	END MODE	Distance
END ACTION	Merge	END ACTION	Merge	END ACTION	Merge	END ACTION	Merge	END ACTION	Merge	END ACTION	Merge	END ACTION	Merge	END ACTION	Merge
NEXT ROUTE	15	NEXT ROUTE	15	NEXT ROUTE	15	NEXT ROUTE	15	NEXT ROUTE	15	NEXT ROUTE	15	NEXT ROUTE	15	NEXT ROUTE	15
NEXT STEP	50	NEXT STEP	51	NEXT STEP	52	NEXT STEP	53	NEXT STEP	54	NEXT STEP	55	NEXT STEP	56	NEXT STEP	57

Route 15:57		Route 15:58		Route 15:59		Route 15:60		Route 15:61		Route 15:62		Route 15:63		Route 15:64	
STEP INITIATION		STEP INITIATION		STEP INITIATION		STEP INITIATION		STEP INITIATION		STEP INITIATION		STEP INITIATION		STEP INITIATION	
Go Mode	Auto	Go Mode	Auto	Go Mode	Auto	Go Mode	Auto	Go Mode	Auto	Go Mode	Auto	Go Mode	Auto	Go Mode	Auto
Radio Input	dio Input 1	Radio Input	dio Input 1	Radio Input	dio Input 1	Radio Input	dio Input 1	Radio Input	dio Input 1	Radio Input	dio Input 1	Radio Input	dio Input 1	Radio Input	dio Input 1
Hard Wire Input		Hard Wire Input		Hard Wire Input		Hard Wire Input		Hard Wire Input		Hard Wire Input		Hard Wire Input		Hard Wire Input	
BIT	N/A	BIT	N/A	BIT	N/A	BIT	N/A	BIT	N/A	BIT	N/A	BIT	N/A	BIT	N/A
STEP ACTION		STEP ACTION		STEP ACTION		STEP ACTION		STEP ACTION		STEP ACTION		STEP ACTION		STEP ACTION	
Function	Rotate	Function	Reverse	Function	Dellay	Function	Forward	Function	Rotate	Function	Forward	Function	Rotate	Function	Forward
Speed	33	Speed	33	Speed	33	Speed	33	Speed	33	Speed	33	Speed	33	Speed	33
Navigation	DR	Navigation	DR	Navigation	DR	Navigation	DR	Navigation	DR	Navigation	DR	Navigation	DR	Navigation	DR
Direction	Center	Direction	Center	Direction	Center	Direction	Center	Direction	Center	Direction	Center	Direction	Center	Direction	Center
Size	90	Size	62	Size	5	Size	62	Size	90	Size	144	Size	-90	Size	511
Loss Of Guidance	N/A	Loss Of Guidance	N/A	Loss Of Guidance	N/A	Loss Of Guidance	N/A	Loss Of Guidance	N/A	Loss Of Guidance	N/A	Loss Of Guidance	N/A	Loss Of Guidance	N/A
Obstacle Avoidance	1	Obstacle Avoidance	1	Obstacle Avoidance	1	Obstacle Avoidance	1	Obstacle Avoidance	1	Obstacle Avoidance	1	Obstacle Avoidance	1	Obstacle Avoidance	1
Output	N/a	Output	N/a	Output	#7 Pin Drop	Output		Output		Output		Output		Output	
END OF STEP		END OF STEP		END OF STEP		END OF STEP		END OF STEP		END OF STEP		END OF STEP		END OF STEP	
END MODE	Distance	END MODE	Distance	END MODE	time	END MODE	Distance	END MODE	Distance	END MODE	Distance	END MODE	Distance	END MODE	Distance
END ACTION	Merge	END ACTION	Merge	END ACTION	Merge	END ACTION	Merge	END ACTION	Merge	END ACTION	Merge	END ACTION	Merge	END ACTION	Merge
NEXT ROUTE	15	NEXT ROUTE	15	NEXT ROUTE	15	NEXT ROUTE	15	NEXT ROUTE	15	NEXT ROUTE	15	NEXT ROUTE	15	NEXT ROUTE	15
NEXT STEP	58	NEXT STEP	59	NEXT STEP	60	NEXT STEP	61	NEXT STEP	62	NEXT STEP	63	NEXT STEP	64	NEXT STEP	65

Route 15:65	
STEP INITIATION	
Go Mode	Auto
Radio Input	dio Input 1-
Hard Wire Input	
BIT	N/A
STEP ACTION	
Function	Rotate
Speed	33
Navigation	DR
Direction	Center
Size	-90
Loss Of Guidance	N/A
Obstacle Avoidance	1
Output	
END OF STEP	
END MODE	Distance
END ACTION	Merge
NEXT ROUTE	15
NEXT STEP	66

Route 15:66	
STEP INITIATION	
Go Mode	Auto
Radio Input	dio Input 1-
Hard Wire Input	
BIT	N/A
STEP ACTION	
Function	Forward
Speed	33
Navigation	DR
Direction	Center
Size	2284
Loss Of Guidance	N/A
Obstacle Avoidance	1
Output	
END OF STEP	
END MODE	Distance
END ACTION	Merge
NEXT ROUTE	15
NEXT STEP	67

Route 15:67	
STEP INITIATION	
Go Mode	Auto
Radio Input	dio Input 1-
Hard Wire Input	N/a
BIT	N/A
STEP ACTION	
Function	Rotate
Speed	33
Navigation	DR
Direction	Center
Size	90
Loss Of Guidance	N/A
Obstacle Avoidance	1
Output	N/a
END OF STEP	
END MODE	Distance
END ACTION	Merge
NEXT ROUTE	15
NEXT STEP	68

Route 15:68	
STEP INITIATION	
Go Mode	Auto
Radio Input	dio Input 1-
Hard Wire Input	N/a
BIT	N/A
STEP ACTION	
Function	Forward
Speed	33
Navigation	DR
Direction	Center
Size	962
Loss Of Guidance	N/A
Obstacle Avoidance	1
Output	N/a
END OF STEP	
END MODE	Distance
END ACTION	Merge
NEXT ROUTE	15
NEXT STEP	69

Route 15:69	
STEP INITIATION	
Go Mode	Auto
Radio Input	dio Input 1-
Hard Wire Input	N/a
BIT	N/A
STEP ACTION	
Function	Rotate
Speed	33
Navigation	DR
Direction	Center
Size	-90
Loss Of Guidance	N/A
Obstacle Avoidance	1
Output	N/a
END OF STEP	
END MODE	Distance
END ACTION	Merge
NEXT ROUTE	15
NEXT STEP	70

Route 15:70	
STEP INITIATION	
Go Mode	Auto
Radio Input	dio Input 1-
Hard Wire Input	N/a
BIT	N/A
STEP ACTION	
Function	Forward
Speed	33
Navigation	DR
Direction	Center
Size	525
Loss Of Guidance	N/A
Obstacle Avoidance	1
Output	N/a
END OF STEP	
END MODE	Distance
END ACTION	Merge
NEXT ROUTE	15
NEXT STEP	71

Route 15:71	
STEP INITIATION	
Go Mode	Auto
Radio Input	dio Input 1-
Hard Wire Input	N/a
BIT	N/A
STEP ACTION	
Function	Rotate
Speed	33
Navigation	DR
Direction	Center
Size	90
Loss Of Guidance	N/A
Obstacle Avoidance	1
Output	N/a
END OF STEP	
END MODE	Distance
END ACTION	Merge
NEXT ROUTE	15
NEXT STEP	72

Route 15:72	
STEP INITIATION	
Go Mode	Auto
Radio Input	dio Input 1-
Hard Wire Input	N/a
BIT	N/A
STEP ACTION	
Function	Forward
Speed	33
Navigation	DR
Direction	Center
Size	417
Loss Of Guidance	N/A
Obstacle Avoidance	1
Output	N/a
END OF STEP	
END MODE	Distance
END ACTION	Merge
NEXT ROUTE	15
NEXT STEP	73

Route 15:73	
STEP INITIATION	
Go Mode	Auto
Radio Input	dio Input 1-
Hard Wire Input	N/a
BIT	N/A
STEP ACTION	
Function	Rotate
Speed	33
Navigation	DR
Direction	Center
Size	-90
Loss Of Guidance	N/A
Obstacle Avoidance	1
Output	N/a
END OF STEP	
END MODE	Distance
END ACTION	Merge
NEXT ROUTE	15
NEXT STEP	74

Route 15:74	
STEP INITIATION	
Go Mode	Auto
Radio Input	dio Input 1-
Hard Wire Input	N/a
BIT	N/A
STEP ACTION	
Function	Reverse
Speed	33
Navigation	DR
Direction	Center
Size	66
Loss Of Guidance	N/A
Obstacle Avoidance	1
Output	N/a
END OF STEP	
END MODE	Distance
END ACTION	Merge
NEXT ROUTE	0
NEXT STEP	1

Route 0: 1	
STEP INITIATION	
Go Mode	nput Trigge
Radio Input	dio Input 1-
Hard Wire Input	N/a
BIT	BIT #1-#24
STEP ACTION	
Function	Auto
Speed	33
Navigation	DR
Direction	Center
Size	66
Loss Of Guidance	N/A
Obstacle Avoidance	1
Output	N/a
END OF STEP	
END MODE	Distance
END ACTION	Merge
NEXT ROUTE	0
NEXT STEP	1

Tier 3 Route 16

Route 16:1		Route 16:2		Route 16:3		Route 16:4		Route 16:5		Route 16:6		Route 16:7		Route 16:8	
STEP INITIATION		**STEP INITIATION**		**STEP INITIATION**		**STEP INITIATION**		**STEP INITIATION**		**STEP INITIATION**		**STEP INITIATION**		**STEP INITIATION**	
Go Mode	nput Triggers	**Go Mode**	Auto	**Go Mode**	Auto	**Go Mode**	Auto	**Go Mode**	Auto	**Go Mode**	Auto	**Go Mode**	Auto	**Go Mode**	Auto
Radio Input	adio Input 1-2	**Radio Input**	dio Input 1-	**Radio Input**	dio Input 1-	**Radio Input**	dio Input 1-	**Radio Input**	dio Input 1-	**Radio Input**	dio Input 1-	**Radio Input**	dio Input 1-	**Radio Input**	dio Input 1-
Hard Wire Input	N/A	**Hard Wire Input**	N/A	**Hard Wire Input**	N/A	**Hard Wire Input**	N/A	**Hard Wire Input**	N/A	**Hard Wire Input**	N/A	**Hard Wire Input**	N/A	**Hard Wire Input**	N/A
BIT	Bit #1 off	**BIT**	N/A	**BIT**	N/A	**BIT**	N/A	**BIT**	N/A	**BIT**	N/A	**BIT**	N/A	**BIT**	N/A
Bit#11 On, #23 On	it #5 and 6 Off														
Home Position RFID	it #7 and 9 of														
	t #8 and 10 o														
STEP ACTION		**STEP ACTION**		**STEP ACTION**		**STEP ACTION**		**STEP ACTION**		**STEP ACTION**		**STEP ACTION**		**STEP ACTION**	
Function	Dispatch	**Function**	Forward	**Function**	Rotate	**Function**	Forward	**Function**	Rotate	**Function**	Forward	**Function**	Rotate	**Function**	Forward
Speed	N/A	**Speed**	33	**Speed**	33	**Speed**	33	**Speed**	33	**Speed**	33	**Speed**	33	**Speed**	33
Navigation	N/A	**Navigation**	DR	**Navigation**	DR	**Navigation**	DR	**Navigation**	DR	**Navigation**	DR	**Navigation**	DR	**Navigation**	DR
Direction	N/A	**Direction**	Center	**Direction**	Center	**Direction**	Center	**Direction**	Center	**Direction**	Center	**Direction**	Center	**Direction**	Center
Size	N/A	**Size**	66	**Size**	-90	**Size**	417	**Size**	-90	**Size**	525	**Size**	90	**Size**	962
Loss Of Guidance	N/A	**Loss Of Guidance**	N/A	**Loss Of Guidance**	N/A	**Loss Of Guidance**	N/A	**Loss Of Guidance**	N/A	**Loss Of Guidance**	N/A	**Loss Of Guidance**	N/A	**Loss Of Guidance**	N/A
Obstacle Avoidance	N/A	**Obstacle Avoidance**	1	**Obstacle Avoidance**	1	**Obstacle Avoidance**	1	**Obstacle Avoidance**	1	**Obstacle Avoidance**	1	**Obstacle Avoidance**	1	**Obstacle Avoidance**	1
Output	N/A	**Output**	N/A	**Output**	N/A	**Output**	N/A	**Output**	N/A	**Output**	N/A	**Output**	N/A	**Output**	N/A
END OF STEP		**END OF STEP**		**END OF STEP**		**END OF STEP**		**END OF STEP**		**END OF STEP**		**END OF STEP**		**END OF STEP**	
END MODE	N/A	**END MODE**	Distance	**END MODE**	Distance	**END MODE**	Distance	**END MODE**	Distance	**END MODE**	Distance	**END MODE**	Distance	**END MODE**	Distance
END ACTION	e Bit #11, #2	**END ACTION**	Merge	**END ACTION**	Merge	**END ACTION**	Merge	**END ACTION**	Merge	**END ACTION**	Merge	**END ACTION**	Merge	**END ACTION**	Merge
NEXT ROUTE	16	**NEXT ROUTE**	16	**NEXT ROUTE**	16	**NEXT ROUTE**	16	**NEXT ROUTE**	16	**NEXT ROUTE**	16	**NEXT ROUTE**	16	**NEXT ROUTE**	16
NEXT STEP	**2**	**NEXT STEP**	**3**	**NEXT STEP**	**4**	**NEXT STEP**	**5**	**NEXT STEP**	**6**	**NEXT STEP**	**7**	**NEXT STEP**	**8**	**NEXT STEP**	**9**

Route 16:9		Route 16:10		Route 16:11		Route 16:12		Route 16:13		Route 16:14		Route 16:15		Route 16:16	
STEP INITIATION		**STEP INITIATION**		**STEP INITIATION**		**STEP INITIATION**		**STEP INITIATION**		**STEP INITIATION**		**STEP INITIATION**		**STEP INITIATION**	
Go Mode	Auto	**Go Mode**	Auto	**Go Mode**	Auto	**Go Mode**	Auto	**Go Mode**	Auto	**Go Mode**	Auto	**Go Mode**	Auto	**Go Mode**	Auto
Radio Input	dio Input 1-	**Radio Input**	dio Input 1-	**Radio Input**	dio Input 1-	**Radio Input**	dio Input 1-	**Radio Input**	dio Input 1-	**Radio Input**	dio Input 1-	**Radio Input**	dio Input 1-	**Radio Input**	dio Input 1-
Hard Wire Input	N/A	**Hard Wire Input**	N/A	**Hard Wire Input**	N/A	**Hard Wire Input**	N/A	**Hard Wire Input**	N/A	**Hard Wire Input**	N/A	**Hard Wire Input**	N/A	**Hard Wire Input**	N/A
BIT	N/A	**BIT**	N/A	**BIT**	N/A	**BIT**	N/A	**BIT**	N/A	**BIT**	N/A	**BIT**	N/A	**BIT**	N/A
STEP ACTION		**STEP ACTION**		**STEP ACTION**		**STEP ACTION**		**STEP ACTION**		**STEP ACTION**		**STEP ACTION**		**STEP ACTION**	
Function	Rotate	**Function**	Forward	**Function**	Rotate	**Function**	Forward	**Function**	Rotate	**Function**	Forward	**Function**	Rotate	**Function**	Reverse
Speed	33	**Speed**	33	**Speed**	33	**Speed**	33	**Speed**	33	**Speed**	33	**Speed**	33	**Speed**	33
Navigation	DR	**Navigation**	DR	**Navigation**	DR	**Navigation**	DR	**Navigation**	DR	**Navigation**	DR	**Navigation**	DR	**Navigation**	DR
Direction	Center	**Direction**	Center	**Direction**	Center	**Direction**	Center	**Direction**	Center	**Direction**	Center	**Direction**	Center	**Direction**	Center
Size	-90	**Size**	2284	**Size**	90	**Size**	511	**Size**	90	**Size**	208	**Size**	90	**Size**	62
Loss Of Guidance	N/A	**Loss Of Guidance**	N/A	**Loss Of Guidance**	N/A	**Loss Of Guidance**	N/A	**Loss Of Guidance**	N/A	**Loss Of Guidance**	N/A	**Loss Of Guidance**	N/A	**Loss Of Guidance**	N/A
Obstacle Avoidance	1	**Obstacle Avoidance**	1	**Obstacle Avoidance**	1	**Obstacle Avoidance**	1	**Obstacle Avoidance**	1	**Obstacle Avoidance**	1	**Obstacle Avoidance**	1	**Obstacle Avoidance**	1
Output	N/A	**Output**	N/A	**Output**	N/A	**Output**	N/A	**Output**	N/A	**Output**	N/A	**Output**	N/A	**Output**	#6 Pin Up
END OF STEP		**END OF STEP**		**END OF STEP**		**END OF STEP**		**END OF STEP**		**END OF STEP**		**END OF STEP**		**END OF STEP**	
END MODE	Distance	**END MODE**	Distance	**END MODE**	Distance	**END MODE**	Distance	**END MODE**	Distance	**END MODE**	Distance	**END MODE**	Distance	**END MODE**	Distance
END ACTION	Merge	**END ACTION**	Merge	**END ACTION**	Merge	**END ACTION**	Merge	**END ACTION**	Merge	**END ACTION**	Merge	**END ACTION**	Merge	**END ACTION**	Merge
NEXT ROUTE	16	**NEXT ROUTE**	16	**NEXT ROUTE**	16	**NEXT ROUTE**	16	**NEXT ROUTE**	16	**NEXT ROUTE**	16	**NEXT ROUTE**	16	**NEXT ROUTE**	16
NEXT STEP	**10**	**NEXT STEP**	**11**	**NEXT STEP**	**12**	**NEXT STEP**	**13**	**NEXT STEP**	**14**	**NEXT STEP**	**15**	**NEXT STEP**	**16**	**NEXT STEP**	**17**

Route 16:17		Route 16:18		Route 16:19		Route 16:20		Route 16:21		Route 16:22		Route 16:23		Route 16:24	
STEP INITIATION		**STEP INITIATION**		**STEP INITIATION**		**STEP INITIATION**		**STEP INITIATION**		**STEP INITIATION**		**STEP INITIATION**		**STEP INITIATION**	
Go Mode	Auto	**Go Mode**	Auto	**Go Mode**	Auto	**Go Mode**	Auto	**Go Mode**	Auto	**Go Mode**	Auto	**Go Mode**	Auto	**Go Mode**	Auto
Radio Input	dio Input 1-	**Radio Input**	dio Input 1-	**Radio Input**	dio Input 1-	**Radio Input**	dio Input 1-	**Radio Input**	dio Input 1-	**Radio Input**	dio Input 1-	**Radio Input**	dio Input 1-	**Radio Input**	dio Input 1-
Hard Wire Input	N/A	**Hard Wire Input**	N/A	**Hard Wire Input**	N/A	**Hard Wire Input**	N/A	**Hard Wire Input**	N/A	**Hard Wire Input**	N/A	**Hard Wire Input**	N/A	**Hard Wire Input**	N/A
BIT	N/A	**BIT**	N/A	**BIT**	N/A	**BIT**	N/A	**BIT**	N/A	**BIT**	N/A	**BIT**	N/A	**BIT**	N/A
STEP ACTION		**STEP ACTION**		**STEP ACTION**		**STEP ACTION**		**STEP ACTION**		**EP ACTION**		**STEP ACTION**		**STEP ACTION**	
Function	Forward	**Function**	Rotate	**Function**	Forward	**Function**	Rotate	**Function**	Forward	**Function**	Rotate	**Function**	Forward	**Function**	Rotate
Speed	33	**Speed**	33	**Speed**	33	**Speed**	33	**Speed**	33	**Speed**	33	**Speed**	33	**Speed**	33
Navigation	DR	**Navigation**	DR	**Navigation**	DR	**Navigation**	DR	**Navigation**	DR	**Navigation**	DR	**Navigation**	DR	**Navigation**	DR
Direction	Center	**Direction**	Center	**Direction**	Center	**Direction**	Center	**Direction**	Center	**Direction**	Center	**Direction**	Center	**Direction**	Center
Size	62	**Size**	90	**Size**	208	**Size**	-90	**Size**	511	**Size**	-90	**Size**	2284	**Size**	90
Loss Of Guidance	N/A	**Loss Of Guidance**	N/A	**Loss Of Guidance**	N/A	**Loss Of Guidance**	N/A	**Loss Of Guidance**	N/A	**Loss Of Guidance**	N/A	**Loss Of Guidance**	N/A	**Loss Of Guidance**	N/A
Obstacle Avoidance	1	**Obstacle Avoidance**	1	**Obstacle Avoidance**	1	**Obstacle Avoidance**	1	**Obstacle Avoidance**	1	**Obstacle Avoidance**	1	**Obstacle Avoidance**	1	**Obstacle Avoidance**	1
Output	N/A	**Output**	N/A	**Output**	N/A	**Output**	N/A	**Output**	N/A	**Output**	N/A	**Output**	N/A	**Output**	N/A
END OF STEP		**END OF STEP**		**END OF STEP**		**END OF STEP**		**END OF STEP**		**ID OF STEP**		**END OF STEP**		**END OF STEP**	
END MODE	Distance	**END MODE**	Distance	**END MODE**	Distance	**END MODE**	Distance	**END MODE**	Distance	**END MODE**	Distance	**END MODE**	Distance	**END MODE**	Distance
END ACTION	Merge	**END ACTION**	Merge	**END ACTION**	Merge	**END ACTION**	Merge	**END ACTION**	Merge	**END ACTION**	Merge	**END ACTION**	Merge	**END ACTION**	Merge
NEXT ROUTE	16	**NEXT ROUTE**	16	**NEXT ROUTE**	16	**NEXT ROUTE**	16	**NEXT ROUTE**	16	**NEXT ROUTE**	16	**NEXT ROUTE**	16	**NEXT ROUTE**	16
NEXT STEP	**18**	**NEXT STEP**	**19**	**NEXT STEP**	**20**	**NEXT STEP**	**21**	**NEXT STEP**	**22**	**NEXT STEP**	**23**	**NEXT STEP**	**24**	**NEXT STEP**	**25**

Route 16:25		Route 16:26		Route 16:27		Route 16:28		Route 16:29		Route 16:30		Route 16:31		Route 16:32	
STEP INITIATION		**STEP INITIATION**		**STEP INITIATION**		**STEP INITIATION**		**STEP INITIATION**		**STEP INITIATION**		**STEP INITIATION**		**STEP INITIATION**	
Go Mode	Auto	**Go Mode**	Auto	**Go Mode**	Auto	**Go Mode**	Auto	**Go Mode**	Auto	**Go Mode**	Auto	**Go Mode**	Auto	**Go Mode**	Auto
Radio Input	dio Input 1-	**Radio Input**	dio Input 1-	**Radio Input**	dio Input 1-	**Radio Input**	dio Input 1-	**Radio Input**	dio Input 1-	**Radio Input**	dio Input 1-	**Radio Input**	dio Input 1-	**Radio Input**	dio Input 1-
Hard Wire Input	N/A	**Hard Wire Input**	N/A	**Hard Wire Input**	N/A	**Hard Wire Input**	N/A	**Hard Wire Input**	N/A	**Hard Wire Input**	N/A	**Hard Wire Input**	N/A	**Hard Wire Input**	Cart prese
BIT	N/A	**BIT**	N/A	**BIT**	N/A	**BIT**	N/A	**BIT**	N/A	**BIT**	N/A	**BIT**	N/A	**BIT**	N/A
STEP ACTION		**STEP ACTION**		**STEP ACTION**		**STEP ACTION**		**STEP ACTION**		**STEP ACTION**		**STEP ACTION**		**STEP ACTION**	
Function	Forward	**Function**	Rotate	**Function**	Reverse	**Function**	Delay	**Function**	Forward	**Function**	Rotate	**Function**	Reverse	**Function**	Forward
Speed	33	**Speed**	33	**Speed**	33	**Speed**	33	**Speed**	33	**Speed**	33	**Speed**	33	**Speed**	33
Navigation	DR	**Navigation**	DR	**Navigation**	DR	**Navigation**	DR	**Navigation**	DR	**Navigation**	DR	**Navigation**	DR	**Navigation**	DR
Direction	Center	**Direction**	Center	**Direction**	Center	**Direction**	Center	**Direction**	Center	**Direction**	Center	**Direction**	Center	**Direction**	Center
Size	1240	**Size**	90	**Size**	279	**Size**	5	**Size**	104	**Size**	-90	**Size**	102	**Size**	102
Loss Of Guidance	N/A	**Loss Of Guidance**	N/A	**Loss Of Guidance**	N/A	**Loss Of Guidance**	N/A	**Loss Of Guidance**	N/A	**Loss Of Guidance**	N/A	**Loss Of Guidance**	N/A	**Loss Of Guidance**	N/A
Obstacle Avoidance	1	**Obstacle Avoidance**	1	**Obstacle Avoidance**	1	**Obstacle Avoidance**	1	**Obstacle Avoidance**	1	**Obstacle Avoidance**	1	**Obstacle Avoidance**	1	**Obstacle Avoidance**	1
Output	N/A	**Output**	N/A	**Output**	N/A	**Output**	#7 Pin Drop	**Output**		**Output**		**Output**	#6 pin up	**Output**	N/a
END OF STEP		**END OF STEP**		**END OF STEP**		**END OF STEP**		**END OF STEP**		**END OF STEP**		**END OF STEP**		**END OF STEP**	
END MODE	Distance	**END MODE**	Distance	**END MODE**	Distance	**END MODE**	time	**END MODE**	Distance	**END MODE**	Distance	**END MODE**	Distance	**END MODE**	Distance
END ACTION	Merge	**END ACTION**	Merge	**END ACTION**	Merge	**END ACTION**	Merge	**END ACTION**	Merge	**END ACTION**	Merge	**END ACTION**	Merge	**END ACTION**	Merge
NEXT ROUTE	16	**NEXT ROUTE**	16	**NEXT ROUTE**	16	**NEXT ROUTE**	16	**NEXT ROUTE**	16	**NEXT ROUTE**	16	**NEXT ROUTE**	16	**NEXT ROUTE**	16
NEXT STEP	**26**	**NEXT STEP**	**27**	**NEXT STEP**	**28**	**NEXT STEP**	**29**	**NEXT STEP**	**30**	**NEXT STEP**	**31**	**NEXT STEP**	**32**	**NEXT STEP**	**33**

Route 16:33		Route 16:34		Route 16:35		Route 16:36		Route 16:37		Route 16:38		Route 16:39		Route 16:40	
STEP INITIATION		STEP INITIATION		STEP INITIATION		STEP INITIATION		STEP INITIATION		STEP INITIATION		STEP INITIATION		STEP INITIATION	
Go Mode	Auto	Go Mode	Auto	Go Mode	Auto	Go Mode	Auto	Go Mode	Auto	Go Mode	Auto	Go Mode	Auto	Go Mode	Auto
Radio Input	dio Input 1	Radio Input	dio Input 1	Radio Input	dio Input 1	Radio Input	dio Input 1	Radio Input	dio Input 1	Radio Input	dio Input 1	Radio Input	dio Input 1	Radio Input	dio Input 1
Hard Wire Input	N/A	Hard Wire Input	N/A	Hard Wire Input	N/A	Hard Wire Input	N/A	Hard Wire Input	N/A	Hard Wire Input	N/A	Hard Wire Input	N/A	Hard Wire Input	N/A
BIT	N/A	BIT	N/A	BIT	N/A	BIT	N/A	BIT	N/A	BIT	N/A	BIT	N/A	BIT	N/A
STEP ACTION		STEP ACTION		STEP ACTION		STEP ACTION		STEP ACTION		STEP ACTION		STEP ACTION		STEP ACTION	
Function	Rotate	Function	Reverse	Function	Delay	Function	Forward	Function	Rotate	Function	Reverse	Function	Forward	Function	Rotate
Speed	33	Speed	33	Speed	33	Speed	33	Speed	33	Speed	33	Speed	33	Speed	33
Navigation	DR	Navigation	DR	Navigation	DR	Navigation	DR	Navigation	DR	Navigation	DR	Navigation	DR	Navigation	DR
Direction	Center	Direction	Center	Direction	Center	Direction	Center	Direction	Center	Direction	Center	Direction	Center	Direction	Center
Size	45	Size	99	Size	5	Size	99	Size	45	Size	104	Size	104	Size	-90
Loss Of Guidance	N/A	Loss Of Guidance	N/A	Loss Of Guidance	N/A	Loss Of Guidance	N/A	Loss Of Guidance	N/A	Loss Of Guidance	N/A	Loss Of Guidance	N/A	Loss Of Guidance	N/A
Obstacle Avoidance	1	Obstacle Avoidance	1	Obstacle Avoidance	1	Obstacle Avoidance	1	Obstacle Avoidance	1	Obstacle Avoidance	1	Obstacle Avoidance	1	Obstacle Avoidance	1
Output	N/a	Output	N/a	Output	#7 pin drop	Output	N/a	Output	N/a	Output	#7 pin raise	Output	N/A	Output	N/A
END OF STEP		END OF STEP		END OF STEP		END OF STEP		END OF STEP		END OF STEP		END OF STEP		END OF STEP	
END MODE	Distance	END MODE	Distance	END MODE	time	END MODE	Distance	END MODE	Distance	END MODE	Distance	END MODE	Distance	END MODE	Distance
END ACTION	Merge	END ACTION	Merge	END ACTION	Merge	END ACTION	Merge	END ACTION	Merge	END ACTION	Merge	END ACTION	Merge	END ACTION	Merge
NEXT ROUTE	16	NEXT ROUTE	16	NEXT ROUTE	16	NEXT ROUTE	16	NEXT ROUTE	16	NEXT ROUTE	16	NEXT ROUTE	16	NEXT ROUTE	16
NEXT STEP	34	NEXT STEP	35	NEXT STEP	36	NEXT STEP	37	NEXT STEP	38	NEXT STEP	39	NEXT STEP	40	NEXT STEP	41

Route 16:41		Route 16:42		Route 16:43		Route 16:44		Route 16:45		Route 16:46		Route 16:47		Route 16:48	
STEP INITIATION		STEP INITIATION		STEP INITIATION		STEP INITIATION		STEP INITIATION		STEP INITIATION		STEP INITIATION		STEP INITIATION	
Go Mode	Auto	Go Mode	Auto	Go Mode	Auto	Go Mode	Auto	Go Mode	Auto	Go Mode	Auto	Go Mode	Auto	Go Mode	Auto
Radio Input	dio Input 1	Radio Input	dio Input 1	Radio Input	dio Input 1	Radio Input	dio Input 1	Radio Input	dio Input 1	Radio Input	dio Input 1	Radio Input	dio Input 1	Radio Input	dio Input 1
Hard Wire Input	N/A	Hard Wire Input	N/A	Hard Wire Input	N/A	Hard Wire Input	N/A	Hard Wire Input	N/A	Hard Wire Input	Cart Prese	Hard Wire Input		Hard Wire Input	
BIT	N/A	BIT	N/A	BIT	N/A	BIT	N/A	BIT	N/A	BIT	N/A	BIT	N/A	BIT	N/A
STEP ACTION		STEP ACTION		STEP ACTION		STEP ACTION		STEP ACTION		STEP ACTION		STEP ACTION		STEP ACTION	
Function	Reverse	Function	Delay	Function	Forward	Function	Rotate	Function	Reverse	Function	Forward	Function	Rotate	Function	Forward
Speed	33	Speed	33	Speed	33	Speed	33	Speed	33	Speed	33	Speed	33	Speed	33
Navigation	DR	Navigation	DR	Navigation	DR	Navigation	DR	Navigation	DR	Navigation	DR	Navigation	DR	Navigation	DR
Direction	Center	Direction	Center	Direction	Center	Direction	Center	Direction	Center	Direction	Center	Direction	Center	Direction	Center
Size	102	Size	5	Size	102	Size	45	Size	99	Size	99	Size	45	Size	174
Loss Of Guidance	N/A	Loss Of Guidance	N/A	Loss Of Guidance	N/A	Loss Of Guidance	N/A	Loss Of Guidance	N/A	Loss Of Guidance	N/A	Loss Of Guidance	N/A	Loss Of Guidance	N/A
Obstacle Avoidance	1	Obstacle Avoidance	1	Obstacle Avoidance	1	Obstacle Avoidance	1	Obstacle Avoidance	1	Obstacle Avoidance	1	Obstacle Avoidance	1	Obstacle Avoidance	1
Output	N/A	Output	#7 Pin Drop	Output	N/a	Output	N/a	Output	#6 Pin Raise	Output	N/a	Output	N/a	Output	N/a
END OF STEP		END OF STEP		END OF STEP		END OF STEP		END OF STEP		END OF STEP		END OF STEP		END OF STEP	
END MODE	Distance	END MODE	Time	END MODE	Distance	END MODE	Distance	END MODE	Distance	END MODE	Distance	END MODE	Distance	END MODE	Distance
END ACTION	Merge	END ACTION	Merge	END ACTION	Merge	END ACTION	Merge	END ACTION	Merge	END ACTION	Merge	END ACTION	Merge	END ACTION	Merge
NEXT ROUTE	16	NEXT ROUTE	16	NEXT ROUTE	16	NEXT ROUTE	16	NEXT ROUTE	16	NEXT ROUTE	16	NEXT ROUTE	16	NEXT ROUTE	16
NEXT STEP	42	NEXT STEP	43	NEXT STEP	44	NEXT STEP	45	NEXT STEP	46	NEXT STEP	47	NEXT STEP	48	NEXT STEP	49

Route 16:49		Route 16:50		Route 16:51		Route 16:52		Route 16:53		Route 16:54		Route 16:55		Route 16:56	
STEP INITIATION		STEP INITIATION		STEP INITIATION		STEP INITIATION		STEP INITIATION		STEP INITIATION		STEP INITIATION		STEP INITIATION	
Go Mode	Auto	Go Mode	Auto	Go Mode	Auto	Go Mode	Auto	Go Mode	Auto	Go Mode	Auto	Go Mode	Auto	Go Mode	Auto
Radio Input	dio Input 1	Radio Input	dio Input 1	Radio Input	dio Input 1	Radio Input	dio Input 1	Radio Input	dio Input 1	Radio Input	dio Input 1	Radio Input	dio Input 1	Radio Input	dio Input 1
Hard Wire Input		Hard Wire Input		Hard Wire Input		Hard Wire Input		Hard Wire Input		Hard Wire Input		Hard Wire Input		Hard Wire Input	
BIT	N/A	BIT	N/A	BIT	N/A	BIT	N/A	BIT	N/A	BIT	N/A	BIT	N/A	BIT	N/A
STEP ACTION		STEP ACTION		STEP ACTION		STEP ACTION		STEP ACTION		STEP ACTION		STEP ACTION		STEP ACTION	
Function	Rotate	Function	Forward	Function	Rotate	Function	Forward	Function	Rotate	Function	Forward	Function	Rotate	Function	Forward
Speed	33	Speed	33	Speed	33	Speed	33	Speed	33	Speed	33	Speed	33	Speed	33
Navigation	DR	Navigation	DR	Navigation	DR	Navigation	DR	Navigation	DR	Navigation	DR	Navigation	DR	Navigation	DR
Direction	Center	Direction	Center	Direction	Center	Direction	Center	Direction	Center	Direction	Center	Direction	Center	Direction	Center
Size	90	Size	1240	Size	-90	Size	2284	Size	90	Size	511	Size	90	Size	208
Loss Of Guidance	N/A	Loss Of Guidance	N/A	Loss Of Guidance	N/A	Loss Of Guidance	N/A	Loss Of Guidance	N/A	Loss Of Guidance	N/A	Loss Of Guidance	N/A	Loss Of Guidance	N/A
Obstacle Avoidance	1	Obstacle Avoidance	1	Obstacle Avoidance	1	Obstacle Avoidance	1	Obstacle Avoidance	1	Obstacle Avoidance	1	Obstacle Avoidance	1	Obstacle Avoidance	1
Output	N/a	Output	N/a	Output	N/a	Output	N/a	Output	N/a	Output	N/a	Output	N/a	Output	N/a
END OF STEP		END OF STEP		END OF STEP		END OF STEP		END OF STEP		END OF STEP		END OF STEP		END OF STEP	
END MODE	Distance	END MODE	Distance	END MODE	Distance	END MODE	Distance	END MODE	Distance	END MODE	Distance	END MODE	Distance	END MODE	Distance
END ACTION	Merge	END ACTION	Merge	END ACTION	Merge	END ACTION	Merge	END ACTION	Merge	END ACTION	Merge	END ACTION	Merge	END ACTION	Merge
NEXT ROUTE	16	NEXT ROUTE	16	NEXT ROUTE	16	NEXT ROUTE	16	NEXT ROUTE	16	NEXT ROUTE	16	NEXT ROUTE	16	NEXT ROUTE	16
NEXT STEP	50	NEXT STEP	51	NEXT STEP	52	NEXT STEP	53	NEXT STEP	54	NEXT STEP	55	NEXT STEP	56	NEXT STEP	57

Route 16:57		Route 16:58		Route 16:59		Route 16:60		Route 16:61		Route 16:62		Route 16:63		Route 16:64	
STEP INITIATION		STEP INITIATION		STEP INITIATION		STEP INITIATION		STEP INITIATION		STEP INITIATION		STEP INITIATION		STEP INITIATION	
Go Mode	Auto	Go Mode	Auto	Go Mode	Auto	Go Mode	Auto	Go Mode	Auto	Go Mode	Auto	Go Mode	Auto	Go Mode	Auto
Radio Input	dio Input 1	Radio Input	dio Input 1	Radio Input	dio Input 1	Radio Input	dio Input 1	Radio Input	dio Input 1	Radio Input	dio Input 1	Radio Input	dio Input 1	Radio Input	dio Input 1
Hard Wire Input		Hard Wire Input		Hard Wire Input		Hard Wire Input		Hard Wire Input		Hard Wire Input		Hard Wire Input		Hard Wire Input	
BIT	N/A	BIT	N/A	BIT	N/A	BIT	N/A	BIT	N/A	BIT	N/A	BIT	N/A	BIT	N/A
STEP ACTION		STEP ACTION		STEP ACTION		STEP ACTION		STEP ACTION		STEP ACTION		STEP ACTION		STEP ACTION	
Function	Rotate	Function	Reverse	Function	Dellay	Function	Forward	Function	Rotate	Function	Forward	Function	Rotate	Function	Forward
Speed	33	Speed	33	Speed	33	Speed	33	Speed	33	Speed	33	Speed	33	Speed	33
Navigation	DR	Navigation	DR	Navigation	DR	Navigation	DR	Navigation	DR	Navigation	DR	Navigation	DR	Navigation	DR
Direction	Center	Direction	Center	Direction	Center	Direction	Center	Direction	Center	Direction	Center	Direction	Center	Direction	Center
Size	90	Size	62	Size	5	Size	62	Size	90	Size	208	Size	-90	Size	511
Loss Of Guidance	N/A	Loss Of Guidance	N/A	Loss Of Guidance	N/A	Loss Of Guidance	N/A	Loss Of Guidance	N/A	Loss Of Guidance	N/A	Loss Of Guidance	N/A	Loss Of Guidance	N/A
Obstacle Avoidance	1	Obstacle Avoidance	1	Obstacle Avoidance	1	Obstacle Avoidance	1	Obstacle Avoidance	1	Obstacle Avoidance	1	Obstacle Avoidance	1	Obstacle Avoidance	1
Output	N/a	Output	N/a	Output	#7 Pin Drop	Output		Output		Output		Output		Output	
END OF STEP		END OF STEP		END OF STEP		END OF STEP		END OF STEP		END OF STEP		END OF STEP		END OF STEP	
END MODE	Distance	END MODE	Distance	END MODE	time	END MODE	Distance	END MODE	Distance	END MODE	Distance	END MODE	Distance	END MODE	Distance
END ACTION	Merge	END ACTION	Merge	END ACTION	Merge	END ACTION	Merge	END ACTION	Merge	END ACTION	Merge	END ACTION	Merge	END ACTION	Merge
NEXT ROUTE	16	NEXT ROUTE	16	NEXT ROUTE	16	NEXT ROUTE	16	NEXT ROUTE	16	NEXT ROUTE	16	NEXT ROUTE	16	NEXT ROUTE	16
NEXT STEP	58	NEXT STEP	59	NEXT STEP	60	NEXT STEP	61	NEXT STEP	62	NEXT STEP	63	NEXT STEP	64	NEXT STEP	65

Route 16:65		Route 16:66		Route 16:67		Route 16:68		Route 16:69		Route 16:70		Route 16:71		Route 16:72	
STEP INITIATION		STEP INITIATION		STEP INITIATION		STEP INITIATION		STEP INITIATION		STEP INITIATION		STEP INITIATION		STEP INITIATION	
Go Mode	Auto	**Go Mode**	Auto	**Go Mode**	Auto	**Go Mode**	Auto	**Go Mode**	Auto	**Go Mode**	Auto	**Go Mode**	Auto	**Go Mode**	Auto
Radio Input	dio Input 1-	**Radio Input**	dio Input 1-	**Radio Input**	dio Input 1-	**Radio Input**	dio Input 1-	**Radio Input**	dio Input 1-	**Radio Input**	dio Input 1-	**Radio Input**	dio Input 1-	**Radio Input**	dio Input 1-
Hard Wire Input		**Hard Wire Input**		**Hard Wire Input**	N/a	**Hard Wire Input**	N/a	**Hard Wire Input**	N/a	**Hard Wire Input**	N/a	**Hard Wire Input**	N/a	**Hard Wire Input**	N/a
BIT	N/A	**BIT**	N/A	**BIT**	N/A	**BIT**	N/A	**BIT**	N/A	**BIT**	N/A	**BIT**	N/A	**BIT**	N/A
STEP ACTION		STEP ACTION		STEP ACTION		STEP ACTION		STEP ACTION		STEP ACTION		STEP ACTION		STEP ACTION	
Function	Rotate	**Function**	Forward	**Function**	Rotate	**Function**	Forward	**Function**	Rotate	**Function**	Forward	**Function**	Rotate	**Function**	Forward
Speed	33	**Speed**	33	**Speed**	33	**Speed**	33	**Speed**	33	**Speed**	33	**Speed**	33	**Speed**	33
Navigation	DR	**Navigation**	DR	**Navigation**	DR	**Navigation**	DR	**Navigation**	DR	**Navigation**	DR	**Navigation**	DR	**Navigation**	DR
Direction	Center	**Direction**	Center	**Direction**	Center	**Direction**	Center	**Direction**	Center	**Direction**	Center	**Direction**	Center	**Direction**	Center
Size	-90	**Size**	2284	**Size**	90	**Size**	962	**Size**	-90	**Size**	525	**Size**	90	**Size**	417
Loss Of Guidance	N/A	**Loss Of Guidance**	N/A	**Loss Of Guidance**	N/A	**Loss Of Guidance**	N/A	**Loss Of Guidance**	N/A	**Loss Of Guidance**	N/A	**Loss Of Guidance**	N/A	**Loss Of Guidance**	N/A
Obstacle Avoidance	1	**Obstacle Avoidance**	1	**Obstacle Avoidance**	1	**Obstacle Avoidance**	1	**Obstacle Avoidance**	1	**Obstacle Avoidance**	1	**Obstacle Avoidance**	1	**Obstacle Avoidance**	1
Output		**Output**		**Output**	N/a	**Output**	N/a	**Output**	N/a	**Output**	N/a	**Output**	N/a	**Output**	N/a
END OF STEP		END OF STEP		END OF STEP		END OF STEP		END OF STEP		END OF STEP		END OF STEP		END OF STEP	
END MODE	Distance	**END MODE**	Distance	**END MODE**	Distance	**END MODE**	Distance	**END MODE**	Distance	**END MODE**	Distance	**END MODE**	Distance	**END MODE**	Distance
END ACTION	Merge	**END ACTION**	Merge	**END ACTION**	Merge	**END ACTION**	Merge	**END ACTION**	Merge	**END ACTION**	Merge	**END ACTION**	Merge	**END ACTION**	Merge
NEXT ROUTE	16	**NEXT ROUTE**	16	**NEXT ROUTE**	16	**NEXT ROUTE**	16	**NEXT ROUTE**	16	**NEXT ROUTE**	16	**NEXT ROUTE**	16	**NEXT ROUTE**	16
NEXT STEP	**66**	**NEXT STEP**	**67**	**NEXT STEP**	**68**	**NEXT STEP**	**69**	**NEXT STEP**	**70**	**NEXT STEP**	**71**	**NEXT STEP**	**72**	**NEXT STEP**	**73**

Route 16:73		Route 16:74		Route 0: 1	
STEP INITIATION		STEP INITIATION		STEP INITIATION	
Go Mode	Auto	**Go Mode**	Auto	**Go Mode**	nput Trigge
Radio Input	dio Input 1-	**Radio Input**	dio Input 1-	**Radio Input**	dio Input 1-
Hard Wire Input	N/a	**Hard Wire Input**	N/a	**Hard Wire Input**	N/a
BIT	N/A	**BIT**	N/A	**BIT**	BIT #1-#24
STEP ACTION		STEP ACTION		STEP ACTION	
Function	Rotate	**Function**	Reverse	**Function**	Auto
Speed	33	**Speed**	33	**Speed**	33
Navigation	DR	**Navigation**	DR	**Navigation**	DR
Direction	Center	**Direction**	Center	**Direction**	Center
Size	-90	**Size**	66	**Size**	66
Loss Of Guidance	N/A	**Loss Of Guidance**	N/A	**Loss Of Guidance**	N/A
Obstacle Avoidance	1	**Obstacle Avoidance**	1	**Obstacle Avoidance**	1
Output	N/a	**Output**	N/a	**Output**	N/a
END OF STEP		END OF STEP		END OF STEP	
END MODE	Distance	**END MODE**	Distance	**END MODE**	Distance
END ACTION	Merge	**END ACTION**	Merge	**END ACTION**	Merge
NEXT ROUTE	16	**NEXT ROUTE**	0	**NEXT ROUTE**	0
NEXT STEP	**74**	**NEXT STEP**	1	**NEXT STEP**	1

Tier 3 Route 17

Route 17:1		Route 17:2		Route 17:3		Route 17:4		Route 17:5		Route 17:6		Route 17:7		Route 17:8	
STEP INITIATION		**STEP INITIATION**		**STEP INITIATION**		**STEP INITIATION**		**STEP INITIATION**		**STEP INITIATION**		**STEP INITIATION**		**STEP INITIATION**	
Go Mode	nput Triggers	**Go Mode**	Auto	**Go Mode**	Auto	**Go Mode**	Auto	**Go Mode**	Auto	**Go Mode**	Auto	**Go Mode**	Auto	**Go Mode**	Auto
Radio Input	adio Input 1-2	**Radio Input**	dio Input 1-	**Radio Input**	dio Input 1-	**Radio Input**	dio Input 1-	**Radio Input**	dio Input 1-	**Radio Input**	dio Input 1-	**Radio Input**	dio Input 1-	**Radio Input**	dio Input 1-
Hard Wire Input	N/A	**Hard Wire Input**	N/A	**Hard Wire Input**	N/A	**Hard Wire Input**	N/A	**Hard Wire Input**	N/A	**Hard Wire Input**	N/A	**Hard Wire Input**	N/A	**Hard Wire Input**	N/A
BIT	Bit #1 off	**BIT**	N/A	**BIT**	N/A	**BIT**	N/A	**BIT**	N/A	**BIT**	N/A	**BIT**	N/A	**BIT**	N/A
Bit#11 On, #24 On	it #5 and 6 Off														
Home Position RFID	it #7 and 9 of														
	t #8 and 10 o														
STEP ACTION		**STEP ACTION**		**STEP ACTION**		**STEP ACTION**		**STEP ACTION**		**STEP ACTION**		**STEP ACTION**		**STEP ACTION**	
Function	Dispatch	**Function**	Forward	**Function**	Rotate	**Function**	Forward	**Function**	Rotate	**Function**	Forward	**Function**	Rotate	**Function**	Forward
Speed	N/A	**Speed**	33	**Speed**	33	**Speed**	33	**Speed**	33	**Speed**	33	**Speed**	33	**Speed**	33
Navigation	N/A	**Navigation**	DR	**Navigation**	DR	**Navigation**	DR	**Navigation**	DR	**Navigation**	DR	**Navigation**	DR	**Navigation**	DR
Direction	N/A	**Direction**	Center	**Direction**	Center	**Direction**	Center	**Direction**	Center	**Direction**	Center	**Direction**	Center	**Direction**	Center
Size	N/A	**Size**	66	**Size**	-90	**Size**	417	**Size**	-90	**Size**	525	**Size**	90	**Size**	962
Loss Of Guidance	N/A	**Loss Of Guidance**	N/A	**Loss Of Guidance**	N/A	**Loss Of Guidance**	N/A	**Loss Of Guidance**	N/A	**Loss Of Guidance**	N/A	**Loss Of Guidance**	N/A	**Loss Of Guidance**	N/A
Obstacle Avoidance	N/A	**Obstacle Avoidance**	1	**Obstacle Avoidance**	1	**Obstacle Avoidance**	1	**Obstacle Avoidance**	1	**Obstacle Avoidance**	1	**Obstacle Avoidance**	1	**Obstacle Avoidance**	1
Output	N/A	**Output**	N/A	**Output**	N/A	**Output**	N/A	**Output**	N/A	**Output**	N/A	**Output**	N/A	**Output**	N/A
END OF STEP		**END OF STEP**		**END OF STEP**		**END OF STEP**		**END OF STEP**		**END OF STEP**		**END OF STEP**		**END OF STEP**	
END MODE	N/A	**END MODE**	Distance	**END MODE**	Distance	**END MODE**	Distance	**END MODE**	Distance	**END MODE**	Distance	**END MODE**	Distance	**END MODE**	Distance
END ACTION	e Bit #11, #2	**END ACTION**	Merge	**END ACTION**	Merge	**END ACTION**	Merge	**END ACTION**	Merge	**END ACTION**	Merge	**END ACTION**	Merge	**END ACTION**	Merge
NEXT ROUTE	17	**NEXT ROUTE**	17	**NEXT ROUTE**	17	**NEXT ROUTE**	17	**NEXT ROUTE**	17	**NEXT ROUTE**	17	**NEXT ROUTE**	17	**NEXT ROUTE**	17
NEXT STEP	**2**	**NEXT STEP**	**3**	**NEXT STEP**	**4**	**NEXT STEP**	**5**	**NEXT STEP**	**6**	**NEXT STEP**	**7**	**NEXT STEP**	**8**	**NEXT STEP**	**9**

Route 17:9		Route 17:10		Route 17:11		Route 17:12		Route 17:13		Route 17:14		Route 17:15		Route 17:16	
STEP INITIATION		**STEP INITIATION**		**STEP INITIATION**		**STEP INITIATION**		**STEP INITIATION**		**STEP INITIATION**		**STEP INITIATION**		**STEP INITIATION**	
Go Mode	Auto	**Go Mode**	Auto	**Go Mode**	Auto	**Go Mode**	Auto	**Go Mode**	Auto	**Go Mode**	Auto	**Go Mode**	Auto	**Go Mode**	Auto
Radio Input	dio Input 1-	**Radio Input**	dio Input 1-	**Radio Input**	dio Input 1-	**Radio Input**	dio Input 1-	**Radio Input**	dio Input 1-	**Radio Input**	dio Input 1-	**Radio Input**	dio Input 1-	**Radio Input**	dio Input 1-
Hard Wire Input	N/A	**Hard Wire Input**	N/A	**Hard Wire Input**	N/A	**Hard Wire Input**	N/A	**Hard Wire Input**	N/A	**Hard Wire Input**	N/A	**Hard Wire Input**	N/A	**Hard Wire Input**	N/A
BIT	N/A	**BIT**	N/A	**BIT**	N/A	**BIT**	N/A	**BIT**	N/A	**BIT**	N/A	**BIT**	N/A	**BIT**	N/A
STEP ACTION		**STEP ACTION**		**STEP ACTION**		**STEP ACTION**		**STEP ACTION**		**STEP ACTION**		**STEP ACTION**		**STEP ACTION**	
Function	Rotate	**Function**	Forward	**Function**	Rotate	**Function**	Forward	**Function**	Rotate	**Function**	Forward	**Function**	Rotate	**Function**	Reverse
Speed	33	**Speed**	33	**Speed**	33	**Speed**	33	**Speed**	33	**Speed**	33	**Speed**	33	**Speed**	33
Navigation	DR	**Navigation**	DR	**Navigation**	DR	**Navigation**	DR	**Navigation**	DR	**Navigation**	DR	**Navigation**	DR	**Navigation**	DR
Direction	Center	**Direction**	Center	**Direction**	Center	**Direction**	Center	**Direction**	Center	**Direction**	Center	**Direction**	Center	**Direction**	Center
Size	-90	**Size**	2284	**Size**	90	**Size**	511	**Size**	90	**Size**	274	**Size**	90	**Size**	62
Loss Of Guidance	N/A	**Loss Of Guidance**	N/A	**Loss Of Guidance**	N/A	**Loss Of Guidance**	N/A	**Loss Of Guidance**	N/A	**Loss Of Guidance**	N/A	**Loss Of Guidance**	N/A	**Loss Of Guidance**	N/A
Obstacle Avoidance	1	**Obstacle Avoidance**	1	**Obstacle Avoidance**	1	**Obstacle Avoidance**	1	**Obstacle Avoidance**	1	**Obstacle Avoidance**	1	**Obstacle Avoidance**	1	**Obstacle Avoidance**	1
Output	N/A	**Output**	N/A	**Output**	N/A	**Output**	N/A	**Output**	N/A	**Output**	N/A	**Output**	N/A	**Output**	#6 Pin Up
END OF STEP		**END OF STEP**		**END OF STEP**		**END OF STEP**		**END OF STEP**		**END OF STEP**		**END OF STEP**		**END OF STEP**	
END MODE	Distance	**END MODE**	Distance	**END MODE**	Distance	**END MODE**	Distance	**END MODE**	Distance	**END MODE**	Distance	**END MODE**	Distance	**END MODE**	Distance
END ACTION	Merge	**END ACTION**	Merge	**END ACTION**	Merge	**END ACTION**	Merge	**END ACTION**	Merge	**END ACTION**	Merge	**END ACTION**	Merge	**END ACTION**	Merge
NEXT ROUTE	17	**NEXT ROUTE**	17	**NEXT ROUTE**	17	**NEXT ROUTE**	17	**NEXT ROUTE**	17	**NEXT ROUTE**	17	**NEXT ROUTE**	17	**NEXT ROUTE**	17
NEXT STEP	**10**	**NEXT STEP**	**11**	**NEXT STEP**	**12**	**NEXT STEP**	**13**	**NEXT STEP**	**14**	**NEXT STEP**	**15**	**NEXT STEP**	**16**	**NEXT STEP**	**17**

Route 17:17		Route 17:18		Route 17:19		Route 17:20		Route 17:21		Route 17:22		Route 17:23		Route 17:24	
STEP INITIATION		**STEP INITIATION**		**STEP INITIATION**		**STEP INITIATION**		**STEP INITIATION**		**STEP INITIATION**		**STEP INITIATION**		**STEP INITIATION**	
Go Mode	Auto	**Go Mode**	Auto	**Go Mode**	Auto	**Go Mode**	Auto	**Go Mode**	Auto	**Go Mode**	Auto	**Go Mode**	Auto	**Go Mode**	Auto
Radio Input	dio Input 1-	**Radio Input**	dio Input 1-	**Radio Input**	dio Input 1-	**Radio Input**	dio Input 1-	**Radio Input**	dio Input 1-	**Radio Input**	dio Input 1-	**Radio Input**	dio Input 1-	**Radio Input**	dio Input 1-
Hard Wire Input	N/A	**Hard Wire Input**	N/A	**Hard Wire Input**	N/A	**Hard Wire Input**	N/A	**Hard Wire Input**	N/A	**Hard Wire Input**	N/A	**Hard Wire Input**	N/A	**Hard Wire Input**	N/A
BIT	N/A	**BIT**	N/A	**BIT**	N/A	**BIT**	N/A	**BIT**	N/A	**BIT**	N/A	**BIT**	N/A	**BIT**	N/A
STEP ACTION		**STEP ACTION**		**STEP ACTION**		**STEP ACTION**		**STEP ACTION**		**EP ACTION**		**STEP ACTION**		**STEP ACTION**	
Function	Forward	**Function**	Rotate	**Function**	Forward	**Function**	Rotate	**Function**	Forward	**Function**	Rotate	**Function**	Forward	**Function**	Rotate
Speed	33	**Speed**	33	**Speed**	33	**Speed**	33	**Speed**	33	**Speed**	33	**Speed**	33	**Speed**	33
Navigation	DR	**Navigation**	DR	**Navigation**	DR	**Navigation**	DR	**Navigation**	DR	**Navigation**	DR	**Navigation**	DR	**Navigation**	DR
Direction	Center	**Direction**	Center	**Direction**	Center	**Direction**	Center	**Direction**	Center	**Direction**	Center	**Direction**	Center	**Direction**	Center
Size	62	**Size**	90	**Size**	274	**Size**	-90	**Size**	511	**Size**	-90	**Size**	2284	**Size**	90
Loss Of Guidance	N/A	**Loss Of Guidance**	N/A	**Loss Of Guidance**	N/A	**Loss Of Guidance**	N/A	**Loss Of Guidance**	N/A	**Loss Of Guidance**	N/A	**Loss Of Guidance**	N/A	**Loss Of Guidance**	N/A
Obstacle Avoidance	1	**Obstacle Avoidance**	1	**Obstacle Avoidance**	1	**Obstacle Avoidance**	1	**Obstacle Avoidance**	1	**Obstacle Avoidance**	1	**Obstacle Avoidance**	1	**Obstacle Avoidance**	1
Output	N/A	**Output**	N/A	**Output**	N/A	**Output**	N/A	**Output**	N/A	**Output**	N/A	**Output**	N/A	**Output**	N/A
END OF STEP		**END OF STEP**		**END OF STEP**		**END OF STEP**		**END OF STEP**		**ID OF STEP**		**END OF STEP**		**END OF STEP**	
END MODE	Distance	**END MODE**	Distance	**END MODE**	Distance	**END MODE**	Distance	**END MODE**	Distance	**END MODE**	Distance	**END MODE**	Distance	**END MODE**	Distance
END ACTION	Merge	**END ACTION**	Merge	**END ACTION**	Merge	**END ACTION**	Merge	**END ACTION**	Merge	**END ACTION**	Merge	**END ACTION**	Merge	**END ACTION**	Merge
NEXT ROUTE	17	**NEXT ROUTE**	17	**NEXT ROUTE**	17	**NEXT ROUTE**	17	**NEXT ROUTE**	17	**NEXT ROUTE**	17	**NEXT ROUTE**	17	**NEXT ROUTE**	17
NEXT STEP	**18**	**NEXT STEP**	**19**	**NEXT STEP**	**20**	**NEXT STEP**	**21**	**NEXT STEP**	**22**	**NEXT STEP**	**23**	**NEXT STEP**	**24**	**NEXT STEP**	**25**

Route 17:25		Route 17:26		Route 17:27		Route 17:28		Route 17:29		Route 17:30		Route 17:31		Route 17:32	
STEP INITIATION		**STEP INITIATION**		**STEP INITIATION**		**STEP INITIATION**		**STEP INITIATION**		**STEP INITIATION**		**STEP INITIATION**		**STEP INITIATION**	
Go Mode	Auto	**Go Mode**	Auto	**Go Mode**	Auto	**Go Mode**	Auto	**Go Mode**	Auto	**Go Mode**	Auto	**Go Mode**	Auto	**Go Mode**	Auto
Radio Input	dio Input 1-	**Radio Input**	dio Input 1-	**Radio Input**	dio Input 1-	**Radio Input**	dio Input 1-	**Radio Input**	dio Input 1-	**Radio Input**	dio Input 1-	**Radio Input**	dio Input 1-	**Radio Input**	dio Input 1-
Hard Wire Input	N/A	**Hard Wire Input**	N/A	**Hard Wire Input**	N/A	**Hard Wire Input**	N/A	**Hard Wire Input**	N/A	**Hard Wire Input**	N/A	**Hard Wire Input**	N/A	**Hard Wire Input**	Cart prese
BIT	N/A	**BIT**	N/A	**BIT**	N/A	**BIT**	N/A	**BIT**	N/A	**BIT**	N/A	**BIT**	N/A	**BIT**	N/A
STEP ACTION		**STEP ACTION**		**STEP ACTION**		**STEP ACTION**		**STEP ACTION**		**STEP ACTION**		**STEP ACTION**		**STEP ACTION**	
Function	Forward	**Function**	Rotate	**Function**	Reverse	**Function**	Delay	**Function**	Forward	**Function**	Rotate	**Function**	Reverse	**Function**	Forward
Speed	33	**Speed**	33	**Speed**	33	**Speed**	33	**Speed**	33	**Speed**	33	**Speed**	33	**Speed**	33
Navigation	DR	**Navigation**	DR	**Navigation**	DR	**Navigation**	DR	**Navigation**	DR	**Navigation**	DR	**Navigation**	DR	**Navigation**	DR
Direction	Center	**Direction**	Center	**Direction**	Center	**Direction**	Center	**Direction**	Center	**Direction**	Center	**Direction**	Center	**Direction**	Center
Size	1240	**Size**	90	**Size**	279	**Size**	5	**Size**	104	**Size**	-90	**Size**	102	**Size**	102
Loss Of Guidance	N/A	**Loss Of Guidance**	N/A	**Loss Of Guidance**	N/A	**Loss Of Guidance**	N/A	**Loss Of Guidance**	N/A	**Loss Of Guidance**	N/A	**Loss Of Guidance**	N/A	**Loss Of Guidance**	N/A
Obstacle Avoidance	1	**Obstacle Avoidance**	1	**Obstacle Avoidance**	1	**Obstacle Avoidance**	1	**Obstacle Avoidance**	1	**Obstacle Avoidance**	1	**Obstacle Avoidance**	1	**Obstacle Avoidance**	1
Output	N/A	**Output**	N/A	**Output**	N/A	**Output**	#7 Pin Drop	**Output**		**Output**		**Output**	#6 pin up	**Output**	N/a
END OF STEP		**END OF STEP**		**END OF STEP**		**END OF STEP**		**END OF STEP**		**END OF STEP**		**END OF STEP**		**END OF STEP**	
END MODE	Distance	**END MODE**	Distance	**END MODE**	Distance	**END MODE**	time	**END MODE**	Distance	**END MODE**	Distance	**END MODE**	Distance	**END MODE**	Distance
END ACTION	Merge	**END ACTION**	Merge	**END ACTION**	Merge	**END ACTION**	Merge	**END ACTION**	Merge	**END ACTION**	Merge	**END ACTION**	Merge	**END ACTION**	Merge
NEXT ROUTE	17	**NEXT ROUTE**	17	**NEXT ROUTE**	17	**NEXT ROUTE**	17	**NEXT ROUTE**	17	**NEXT ROUTE**	17	**NEXT ROUTE**	17	**NEXT ROUTE**	17
NEXT STEP	**26**	**NEXT STEP**	**27**	**NEXT STEP**	**28**	**NEXT STEP**	**29**	**NEXT STEP**	**30**	**NEXT STEP**	**31**	**NEXT STEP**	**32**	**NEXT STEP**	**33**

Route 17:33		Route 17:34		Route 17:35		Route 17:36		Route 17:37		Route 17:38		Route 17:39		Route 17:40	
STEP INITIATION		STEP INITIATION		STEP INITIATION		STEP INITIATION		STEP INITIATION		STEP INITIATION		STEP INITIATION		STEP INITIATION	
Go Mode	Auto	Go Mode	Auto	Go Mode	Auto	Go Mode	Auto	Go Mode	Auto	Go Mode	Auto	Go Mode	Auto	Go Mode	Auto
Radio Input	dio Input 1	Radio Input	dio Input 1	Radio Input	dio Input 1	Radio Input	dio Input 1	Radio Input	dio Input 1	Radio Input	dio Input 1	Radio Input	dio Input 1	Radio Input	dio Input 1
Hard Wire Input	N/A	Hard Wire Input	N/A	Hard Wire Input	N/A	Hard Wire Input	N/A	Hard Wire Input	N/A	Hard Wire Input	N/A	Hard Wire Input	N/A	Hard Wire Input	N/A
BIT	N/A	BIT	N/A	BIT	N/A	BIT	N/A	BIT	N/A	BIT	N/A	BIT	N/A	BIT	N/A
STEP ACTION		STEP ACTION		STEP ACTION		STEP ACTION		STEP ACTION		STEP ACTION		STEP ACTION		STEP ACTION	
Function	Rotate	Function	Reverse	Function	Delay	Function	Forward	Function	Rotate	Function	Reverse	Function	Forward	Function	Rotate
Speed	33	Speed	33	Speed	33	Speed	33	Speed	33	Speed	33	Speed	33	Speed	33
Navigation	DR	Navigation	DR	Navigation	DR	Navigation	DR	Navigation	DR	Navigation	DR	Navigation	DR	Navigation	DR
Direction	Center	Direction	Center	Direction	Center	Direction	Center	Direction	Center	Direction	Center	Direction	Center	Direction	Center
Size	45	Size	99	Size	5	Size	99	Size	45	Size	104	Size	104	Size	-90
Loss Of Guidance	N/A	Loss Of Guidance	N/A	Loss Of Guidance	N/A	Loss Of Guidance	N/A	Loss Of Guidance	N/A	Loss Of Guidance	N/A	Loss Of Guidance	N/A	Loss Of Guidance	N/A
Obstacle Avoidance	1	Obstacle Avoidance	1	Obstacle Avoidance	1	Obstacle Avoidance	1	Obstacle Avoidance	1	Obstacle Avoidance	1	Obstacle Avoidance	1	Obstacle Avoidance	1
Output	N/a	Output	N/a	Output	#7 pin drop	Output	N/a	Output	N/a	Output	#7 pin raise	Output	N/A	Output	N/A
END OF STEP		END OF STEP		END OF STEP		END OF STEP		END OF STEP		END OF STEP		END OF STEP		END OF STEP	
END MODE	Distance	END MODE	Distance	END MODE	time	END MODE	Distance	END MODE	Distance	END MODE	Distance	END MODE	Distance	END MODE	Distance
END ACTION	Merge	END ACTION	Merge	END ACTION	Merge	END ACTION	Merge	END ACTION	Merge	END ACTION	Merge	END ACTION	Merge	END ACTION	Merge
NEXT ROUTE	17	NEXT ROUTE	17	NEXT ROUTE	17	NEXT ROUTE	17	NEXT ROUTE	17	NEXT ROUTE	17	NEXT ROUTE	17	NEXT ROUTE	17
NEXT STEP	34	NEXT STEP	35	NEXT STEP	36	NEXT STEP	37	NEXT STEP	38	NEXT STEP	39	NEXT STEP	40	NEXT STEP	41

Route 17:41		Route 17:42		Route 17:43		Route 17:44		Route 17:45		Route 17:46		Route 17:47		Route 17:48	
STEP INITIATION		STEP INITIATION		STEP INITIATION		STEP INITIATION		STEP INITIATION		STEP INITIATION		STEP INITIATION		STEP INITIATION	
Go Mode	Auto	Go Mode	Auto	Go Mode	Auto	Go Mode	Auto	Go Mode	Auto	Go Mode	Auto	Go Mode	Auto	Go Mode	Auto
Radio Input	dio Input 1	Radio Input	dio Input 1	Radio Input	dio Input 1	Radio Input	dio Input 1	Radio Input	dio Input 1	Radio Input	dio Input 1	Radio Input	dio Input 1	Radio Input	dio Input 1
Hard Wire Input	N/A	Hard Wire Input	N/A	Hard Wire Input	N/A	Hard Wire Input	N/A	Hard Wire Input	N/A	Hard Wire Input	Cart Prese	Hard Wire Input		Hard Wire Input	
BIT	N/A	BIT	N/A	BIT	N/A	BIT	N/A	BIT	N/A	BIT	N/A	BIT	N/A	BIT	N/A
STEP ACTION		STEP ACTION		STEP ACTION		STEP ACTION		STEP ACTION		STEP ACTION		STEP ACTION		STEP ACTION	
Function	Reverse	Function	Delay	Function	Forward	Function	Rotate	Function	Reverse	Function	Forward	Function	Rotate	Function	Forward
Speed	33	Speed	33	Speed	33	Speed	33	Speed	33	Speed	33	Speed	33	Speed	33
Navigation	DR	Navigation	DR	Navigation	DR	Navigation	DR	Navigation	DR	Navigation	DR	Navigation	DR	Navigation	DR
Direction	Center	Direction	Center	Direction	Center	Direction	Center	Direction	Center	Direction	Center	Direction	Center	Direction	Center
Size	102	Size	5	Size	102	Size	45	Size	99	Size	99	Size	45	Size	174
Loss Of Guidance	N/A	Loss Of Guidance	N/A	Loss Of Guidance	N/A	Loss Of Guidance	N/A	Loss Of Guidance	N/A	Loss Of Guidance	N/A	Loss Of Guidance	N/A	Loss Of Guidance	N/A
Obstacle Avoidance	1	Obstacle Avoidance	1	Obstacle Avoidance	1	Obstacle Avoidance	1	Obstacle Avoidance	1	Obstacle Avoidance	1	Obstacle Avoidance	1	Obstacle Avoidance	1
Output	N/A	Output	#7 Pin Drop	Output	N/a	Output	N/a	Output	#6 Pin Raise	Output	N/a	Output	N/a	Output	N/a
END OF STEP		END OF STEP		END OF STEP		END OF STEP		END OF STEP		END OF STEP		END OF STEP		END OF STEP	
END MODE	Distance	END MODE	Time	END MODE	Distance	END MODE	Distance	END MODE	Distance	END MODE	Distance	END MODE	Distance	END MODE	Distance
END ACTION	Merge	END ACTION	Merge	END ACTION	Merge	END ACTION	Merge	END ACTION	Merge	END ACTION	Merge	END ACTION	Merge	END ACTION	Merge
NEXT ROUTE	17	NEXT ROUTE	17	NEXT ROUTE	17	NEXT ROUTE	17	NEXT ROUTE	17	NEXT ROUTE	17	NEXT ROUTE	17	NEXT ROUTE	17
NEXT STEP	42	NEXT STEP	43	NEXT STEP	44	NEXT STEP	45	NEXT STEP	46	NEXT STEP	47	NEXT STEP	48	NEXT STEP	49

Route 17:49		Route 17:50		Route 17:51		Route 17:52		Route 17:53		Route 17:54		Route 17:55		Route 17:56	
STEP INITIATION		STEP INITIATION		STEP INITIATION		STEP INITIATION		STEP INITIATION		STEP INITIATION		STEP INITIATION		STEP INITIATION	
Go Mode	Auto	Go Mode	Auto	Go Mode	Auto	Go Mode	Auto	Go Mode	Auto	Go Mode	Auto	Go Mode	Auto	Go Mode	Auto
Radio Input	dio Input 1	Radio Input	dio Input 1	Radio Input	dio Input 1	Radio Input	dio Input 1	Radio Input	dio Input 1	Radio Input	dio Input 1	Radio Input	dio Input 1	Radio Input	dio Input 1
Hard Wire Input		Hard Wire Input		Hard Wire Input		Hard Wire Input		Hard Wire Input		Hard Wire Input		Hard Wire Input		Hard Wire Input	
BIT	N/A	BIT	N/A	BIT	N/A	BIT	N/A	BIT	N/A	BIT	N/A	BIT	N/A	BIT	N/A
STEP ACTION		STEP ACTION		STEP ACTION		STEP ACTION		STEP ACTION		STEP ACTION		STEP ACTION		STEP ACTION	
Function	Rotate	Function	Forward	Function	Rotate	Function	Forward	Function	Rotate	Function	Forward	Function	Rotate	Function	Forward
Speed	33	Speed	33	Speed	33	Speed	33	Speed	33	Speed	33	Speed	33	Speed	33
Navigation	DR	Navigation	DR	Navigation	DR	Navigation	DR	Navigation	DR	Navigation	DR	Navigation	DR	Navigation	DR
Direction	Center	Direction	Center	Direction	Center	Direction	Center	Direction	Center	Direction	Center	Direction	Center	Direction	Center
Size	90	Size	1240	Size	-90	Size	2284	Size	90	Size	511	Size	90	Size	274
Loss Of Guidance	N/A	Loss Of Guidance	N/A	Loss Of Guidance	N/A	Loss Of Guidance	N/A	Loss Of Guidance	N/A	Loss Of Guidance	N/A	Loss Of Guidance	N/A	Loss Of Guidance	N/A
Obstacle Avoidance	1	Obstacle Avoidance	1	Obstacle Avoidance	1	Obstacle Avoidance	1	Obstacle Avoidance	1	Obstacle Avoidance	1	Obstacle Avoidance	1	Obstacle Avoidance	1
Output	N/a	Output	N/a	Output	N/a	Output	N/a	Output	N/a	Output	N/a	Output	N/a	Output	N/a
END OF STEP		END OF STEP		END OF STEP		END OF STEP		END OF STEP		END OF STEP		END OF STEP		END OF STEP	
END MODE	Distance	END MODE	Distance	END MODE	Distance	END MODE	Distance	END MODE	Distance	END MODE	Distance	END MODE	Distance	END MODE	Distance
END ACTION	Merge	END ACTION	Merge	END ACTION	Merge	END ACTION	Merge	END ACTION	Merge	END ACTION	Merge	END ACTION	Merge	END ACTION	Merge
NEXT ROUTE	17	NEXT ROUTE	17	NEXT ROUTE	17	NEXT ROUTE	17	NEXT ROUTE	17	NEXT ROUTE	17	NEXT ROUTE	17	NEXT ROUTE	17
NEXT STEP	50	NEXT STEP	51	NEXT STEP	52	NEXT STEP	53	NEXT STEP	54	NEXT STEP	55	NEXT STEP	56	NEXT STEP	57

Route 17:57		Route 17:58		Route 17:59		Route 17:60		Route 17:61		Route 17:62		Route 17:63		Route 17:64	
STEP INITIATION		STEP INITIATION		STEP INITIATION		STEP INITIATION		STEP INITIATION		STEP INITIATION		STEP INITIATION		STEP INITIATION	
Go Mode	Auto	Go Mode	Auto	Go Mode	Auto	Go Mode	Auto	Go Mode	Auto	Go Mode	Auto	Go Mode	Auto	Go Mode	Auto
Radio Input	dio Input 1	Radio Input	dio Input 1	Radio Input	dio Input 1	Radio Input	dio Input 1	Radio Input	dio Input 1	Radio Input	dio Input 1	Radio Input	dio Input 1	Radio Input	dio Input 1
Hard Wire Input		Hard Wire Input		Hard Wire Input		Hard Wire Input		Hard Wire Input		Hard Wire Input		Hard Wire Input		Hard Wire Input	
BIT	N/A	BIT	N/A	BIT	N/A	BIT	N/A	BIT	N/A	BIT	N/A	BIT	N/A	BIT	N/A
STEP ACTION		STEP ACTION		STEP ACTION		STEP ACTION		STEP ACTION		STEP ACTION		STEP ACTION		STEP ACTION	
Function	Rotate	Function	Reverse	Function	Dellay	Function	Forward	Function	Rotate	Function	Forward	Function	Rotate	Function	Forward
Speed	33	Speed	33	Speed	33	Speed	33	Speed	33	Speed	33	Speed	33	Speed	33
Navigation	DR	Navigation	DR	Navigation	DR	Navigation	DR	Navigation	DR	Navigation	DR	Navigation	DR	Navigation	DR
Direction	Center	Direction	Center	Direction	Center	Direction	Center	Direction	Center	Direction	Center	Direction	Center	Direction	Center
Size	90	Size	62	Size	5	Size	62	Size	90	Size	274	Size	-90	Size	511
Loss Of Guidance	N/A	Loss Of Guidance	N/A	Loss Of Guidance	N/A	Loss Of Guidance	N/A	Loss Of Guidance	N/A	Loss Of Guidance	N/A	Loss Of Guidance	N/A	Loss Of Guidance	N/A
Obstacle Avoidance	1	Obstacle Avoidance	1	Obstacle Avoidance	1	Obstacle Avoidance	1	Obstacle Avoidance	1	Obstacle Avoidance	1	Obstacle Avoidance	1	Obstacle Avoidance	1
Output	N/a	Output	N/a	Output	#7 Pin Drop	Output		Output		Output		Output		Output	
END OF STEP		END OF STEP		END OF STEP		END OF STEP		END OF STEP		END OF STEP		END OF STEP		END OF STEP	
END MODE	Distance	END MODE	Distance	END MODE	time	END MODE	Distance	END MODE	Distance	END MODE	Distance	END MODE	Distance	END MODE	Distance
END ACTION	Merge	END ACTION	Merge	END ACTION	Merge	END ACTION	Merge	END ACTION	Merge	END ACTION	Merge	END ACTION	Merge	END ACTION	Merge
NEXT ROUTE	17	NEXT ROUTE	17	NEXT ROUTE	17	NEXT ROUTE	17	NEXT ROUTE	17	NEXT ROUTE	17	NEXT ROUTE	17	NEXT ROUTE	17
NEXT STEP	58	NEXT STEP	59	NEXT STEP	60	NEXT STEP	61	NEXT STEP	62	NEXT STEP	63	NEXT STEP	64	NEXT STEP	65

Route 17:65		Route 17:66		Route 17:67		Route 17:68		Route 17:69		Route 17:70		Route 17:71		Route 17:72	
STEP INITIATION		**STEP INITIATION**		**STEP INITIATION**		**STEP INITIATION**		**STEP INITIATION**		**STEP INITIATION**		**STEP INITIATION**		**STEP INITIATION**	
Go Mode	Auto	**Go Mode**	Auto	**Go Mode**	Auto	**Go Mode**	Auto	**Go Mode**	Auto	**Go Mode**	Auto	**Go Mode**	Auto	**Go Mode**	Auto
Radio Input	dio Input 1-	**Radio Input**	dio Input 1-	**Radio Input**	dio Input 1-	**Radio Input**	dio Input 1-	**Radio Input**	dio Input 1-	**Radio Input**	dio Input 1-	**Radio Input**	dio Input 1-	**Radio Input**	dio Input 1-
Hard Wire Input		**Hard Wire Input**		**Hard Wire Input**	N/a	**Hard Wire Input**	N/a	**Hard Wire Input**	N/a	**Hard Wire Input**	N/a	**Hard Wire Input**	N/a	**Hard Wire Input**	N/a
BIT	N/A	**BIT**	N/A	**BIT**	N/A	**BIT**	N/A	**BIT**	N/A	**BIT**	N/A	**BIT**	N/A	**BIT**	N/A
STEP ACTION		**STEP ACTION**		**STEP ACTION**		**STEP ACTION**		**STEP ACTION**		**STEP ACTION**		**STEP ACTION**		**STEP ACTION**	
Function	Rotate	**Function**	Forward	**Function**	Rotate	**Function**	Forward	**Function**	Rotate	**Function**	Forward	**Function**	Rotate	**Function**	Forward
Speed	33	**Speed**	33	**Speed**	33	**Speed**	33	**Speed**	33	**Speed**	33	**Speed**	33	**Speed**	33
Navigation	DR	**Navigation**	DR	**Navigation**	DR	**Navigation**	DR	**Navigation**	DR	**Navigation**	DR	**Navigation**	DR	**Navigation**	DR
Direction	Center	**Direction**	Center	**Direction**	Center	**Direction**	Center	**Direction**	Center	**Direction**	Center	**Direction**	Center	**Direction**	Center
Size	-90	**Size**	2284	**Size**	90	**Size**	962	**Size**	-90	**Size**	525	**Size**	90	**Size**	417
Loss Of Guidance	N/A	**Loss Of Guidance**	N/A	**Loss Of Guidance**	N/A	**Loss Of Guidance**	N/A	**Loss Of Guidance**	N/A	**Loss Of Guidance**	N/A	**Loss Of Guidance**	N/A	**Loss Of Guidance**	N/A
Obstacle Avoidance	1	**Obstacle Avoidance**	1	**Obstacle Avoidance**	1	**Obstacle Avoidance**	1	**Obstacle Avoidance**	1	**Obstacle Avoidance**	1	**Obstacle Avoidance**	1	**Obstacle Avoidance**	1
Output		**Output**		**Output**	N/a	**Output**	N/a	**Output**	N/a	**Output**	N/a	**Output**	N/a	**Output**	N/a
END OF STEP		**END OF STEP**		**END OF STEP**		**END OF STEP**		**END OF STEP**		**END OF STEP**		**END OF STEP**		**END OF STEP**	
END MODE	Distance	**END MODE**	Distance	**END MODE**	Distance	**END MODE**	Distance	**END MODE**	Distance	**END MODE**	Distance	**END MODE**	Distance	**END MODE**	Distance
END ACTION	Merge	**END ACTION**	Merge	**END ACTION**	Merge	**END ACTION**	Merge	**END ACTION**	Merge	**END ACTION**	Merge	**END ACTION**	Merge	**END ACTION**	Merge
NEXT ROUTE	17	**NEXT ROUTE**	17	**NEXT ROUTE**	17	**NEXT ROUTE**	17	**NEXT ROUTE**	17	**NEXT ROUTE**	17	**NEXT ROUTE**	17	**NEXT ROUTE**	17
NEXT STEP	**66**	**NEXT STEP**	**67**	**NEXT STEP**	**68**	**NEXT STEP**	**69**	**NEXT STEP**	**70**	**NEXT STEP**	**71**	**NEXT STEP**	**72**	**NEXT STEP**	**73**

Route 17:73		Route 17:74		Route 0: 1	
STEP INITIATION		**STEP INITIATION**		**STEP INITIATION**	
Go Mode	Auto	**Go Mode**	Auto	**Go Mode**	nput Trigge
Radio Input	dio Input 1-	**Radio Input**	dio Input 1-	**Radio Input**	dio Input 1-
Hard Wire Input	N/a	**Hard Wire Input**	N/a	**Hard Wire Input**	N/a
BIT	N/A	**BIT**	N/A	**BIT**	BIT #1-#24
STEP ACTION		**STEP ACTION**		**STEP ACTION**	
Function	Rotate	**Function**	Reverse	**Function**	Auto
Speed	33	**Speed**	33	**Speed**	33
Navigation	DR	**Navigation**	DR	**Navigation**	DR
Direction	Center	**Direction**	Center	**Direction**	Center
Size	-90	**Size**	66	**Size**	66
Loss Of Guidance	N/A	**Loss Of Guidance**	N/A	**Loss Of Guidance**	N/A
Obstacle Avoidance	1	**Obstacle Avoidance**	1	**Obstacle Avoidance**	1
Output	N/a	**Output**	N/a	**Output**	N/a
END OF STEP		**END OF STEP**		**END OF STEP**	
END MODE	Distance	**END MODE**	Distance	**END MODE**	Distance
END ACTION	Merge	**END ACTION**	Merge	**END ACTION**	Merge
NEXT ROUTE	17	**NEXT ROUTE**	0	**NEXT ROUTE**	0
NEXT STEP	**74**	**NEXT STEP**	1	**NEXT STEP**	1

Tier 3 Route 18

Route 18:1		Route 18:2		Route 18:3		Route 18:4		Route 18:5		Route 18:6		Route 18:7		Route 18:8	
STEP INITIATION		**STEP INITIATION**		**STEP INITIATION**		**STEP INITIATION**		**STEP INITIATION**		**STEP INITIATION**		**STEP INITIATION**		**STEP INITIATION**	
Go Mode	nput Triggers	**Go Mode**	Auto	**Go Mode**	Auto	**Go Mode**	Auto	**Go Mode**	Auto	**Go Mode**	Auto	**Go Mode**	Auto	**Go Mode**	Auto
Radio Input	adio Input 1-2	**Radio Input**	dio Input 1-	**Radio Input**	dio Input 1-	**Radio Input**	dio Input 1-	**Radio Input**	dio Input 1-	**Radio Input**	dio Input 1-	**Radio Input**	dio Input 1-	**Radio Input**	dio Input 1-
Hard Wire Input	N/A	**Hard Wire Input**	N/A	**Hard Wire Input**	N/A	**Hard Wire Input**	N/A	**Hard Wire Input**	N/A	**Hard Wire Input**	N/A	**Hard Wire Input**	N/A	**Hard Wire Input**	N/A
BIT	Bit #1 off	**BIT**	N/A	**BIT**	N/A	**BIT**	N/A	**BIT**	N/A	**BIT**	N/A	**BIT**	N/A	**BIT**	N/A
Bit#12 On, #13 On	it #5 and 6 Off														
Home Position RFID	it #7 and 9 of														
	t #8 and 10 o														
STEP ACTION		**STEP ACTION**		**STEP ACTION**		**STEP ACTION**		**STEP ACTION**		**STEP ACTION**		**STEP ACTION**		**STEP ACTION**	
Function	Dispatch	**Function**	Forward	**Function**	Rotate	**Function**	Forward	**Function**	Rotate	**Function**	Forward	**Function**	Rotate	**Function**	Forward
Speed	N/A	**Speed**	33	**Speed**	33	**Speed**	33	**Speed**	33	**Speed**	33	**Speed**	33	**Speed**	33
Navigation	N/A	**Navigation**	DR	**Navigation**	DR	**Navigation**	DR	**Navigation**	DR	**Navigation**	DR	**Navigation**	DR	**Navigation**	DR
Direction	N/A	**Direction**	Center	**Direction**	Center	**Direction**	Center	**Direction**	Center	**Direction**	Center	**Direction**	Center	**Direction**	Center
Size	N/A	**Size**	66	**Size**	-90	**Size**	417	**Size**	-90	**Size**	525	**Size**	90	**Size**	962
Loss Of Guidance	N/A	**Loss Of Guidance**	N/A	**Loss Of Guidance**	N/A	**Loss Of Guidance**	N/A	**Loss Of Guidance**	N/A	**Loss Of Guidance**	N/A	**Loss Of Guidance**	N/A	**Loss Of Guidance**	N/A
Obstacle Avoidance	N/A	**Obstacle Avoidance**	1	**Obstacle Avoidance**	1	**Obstacle Avoidance**	1	**Obstacle Avoidance**	1	**Obstacle Avoidance**	1	**Obstacle Avoidance**	1	**Obstacle Avoidance**	1
Output	N/A	**Output**	N/A	**Output**	N/A	**Output**	N/A	**Output**	N/A	**Output**	N/A	**Output**	N/A	**Output**	N/A
END OF STEP		**END OF STEP**		**END OF STEP**		**END OF STEP**		**END OF STEP**		**END OF STEP**		**END OF STEP**		**END OF STEP**	
END MODE	N/A	**END MODE**	Distance	**END MODE**	Distance	**END MODE**	Distance	**END MODE**	Distance	**END MODE**	Distance	**END MODE**	Distance	**END MODE**	Distance
END ACTION	e Bit #12, #1	**END ACTION**	Merge	**END ACTION**	Merge	**END ACTION**	Merge	**END ACTION**	Merge	**END ACTION**	Merge	**END ACTION**	Merge	**END ACTION**	Merge
NEXT ROUTE	18	**NEXT ROUTE**	18	**NEXT ROUTE**	18	**NEXT ROUTE**	18	**NEXT ROUTE**	18	**NEXT ROUTE**	18	**NEXT ROUTE**	18	**NEXT ROUTE**	18
NEXT STEP	**2**	**NEXT STEP**	**3**	**NEXT STEP**	**4**	**NEXT STEP**	**5**	**NEXT STEP**	**6**	**NEXT STEP**	**7**	**NEXT STEP**	**8**	**NEXT STEP**	**9**

Route 18:9		Route 18:10		Route 18:11		Route 18:12		Route 18:13		Route 18:14		Route 18:15		Route 18:16	
STEP INITIATION		**STEP INITIATION**		**STEP INITIATION**		**STEP INITIATION**		**STEP INITIATION**		**STEP INITIATION**		**STEP INITIATION**		**STEP INITIATION**	
Go Mode	Auto	**Go Mode**	Auto	**Go Mode**	Auto	**Go Mode**	Auto	**Go Mode**	Auto	**Go Mode**	Auto	**Go Mode**	Auto	**Go Mode**	Auto
Radio Input	dio Input 1-	**Radio Input**	dio Input 1-	**Radio Input**	dio Input 1-	**Radio Input**	dio Input 1-	**Radio Input**	dio Input 1-	**Radio Input**	dio Input 1-	**Radio Input**	dio Input 1-	**Radio Input**	dio Input 1-
Hard Wire Input	N/A	**Hard Wire Input**	N/A	**Hard Wire Input**	N/A	**Hard Wire Input**	N/A	**Hard Wire Input**	N/A	**Hard Wire Input**	N/A	**Hard Wire Input**	N/A	**Hard Wire Input**	N/A
BIT	N/A	**BIT**	N/A	**BIT**	N/A	**BIT**	N/A	**BIT**	N/A	**BIT**	N/A	**BIT**	N/A	**BIT**	N/A
STEP ACTION		**STEP ACTION**		**STEP ACTION**		**STEP ACTION**		**STEP ACTION**		**STEP ACTION**		**STEP ACTION**		**STEP ACTION**	
Function	Rotate	**Function**	Forward	**Function**	Rotate	**Function**	Forward	**Function**	Rotate	**Function**	Forward	**Function**	Rotate	**Function**	Reverse
Speed	33	**Speed**	33	**Speed**	33	**Speed**	33	**Speed**	33	**Speed**	33	**Speed**	33	**Speed**	33
Navigation	DR	**Navigation**	DR	**Navigation**	DR	**Navigation**	DR	**Navigation**	DR	**Navigation**	DR	**Navigation**	DR	**Navigation**	DR
Direction	Center	**Direction**	Center	**Direction**	Center	**Direction**	Center	**Direction**	Center	**Direction**	Center	**Direction**	Center	**Direction**	Center
Size	-90	**Size**	2284	**Size**	90	**Size**	331	**Size**	90	**Size**	144	**Size**	-90	**Size**	62
Loss Of Guidance	N/A	**Loss Of Guidance**	N/A	**Loss Of Guidance**	N/A	**Loss Of Guidance**	N/A	**Loss Of Guidance**	N/A	**Loss Of Guidance**	N/A	**Loss Of Guidance**	N/A	**Loss Of Guidance**	N/A
Obstacle Avoidance	1	**Obstacle Avoidance**	1	**Obstacle Avoidance**	1	**Obstacle Avoidance**	1	**Obstacle Avoidance**	1	**Obstacle Avoidance**	1	**Obstacle Avoidance**	1	**Obstacle Avoidance**	1
Output	N/A	**Output**	N/A	**Output**	N/A	**Output**	N/A	**Output**	N/A	**Output**	N/A	**Output**	N/A	**Output**	#6 Pin Up
END OF STEP		**END OF STEP**		**END OF STEP**		**END OF STEP**		**END OF STEP**		**END OF STEP**		**END OF STEP**		**END OF STEP**	
END MODE	Distance	**END MODE**	Distance	**END MODE**	Distance	**END MODE**	Distance	**END MODE**	Distance	**END MODE**	Distance	**END MODE**	Distance	**END MODE**	Distance
END ACTION	Merge	**END ACTION**	Merge	**END ACTION**	Merge	**END ACTION**	Merge	**END ACTION**	Merge	**END ACTION**	Merge	**END ACTION**	Merge	**END ACTION**	Merge
NEXT ROUTE	18	**NEXT ROUTE**	18	**NEXT ROUTE**	18	**NEXT ROUTE**	18	**NEXT ROUTE**	18	**NEXT ROUTE**	18	**NEXT ROUTE**	18	**NEXT ROUTE**	18
NEXT STEP	**10**	**NEXT STEP**	**11**	**NEXT STEP**	**12**	**NEXT STEP**	**13**	**NEXT STEP**	**14**	**NEXT STEP**	**15**	**NEXT STEP**	**16**	**NEXT STEP**	**17**

Route 18:17		Route 18:18		Route 18:19		Route 18:20		Route 18:21		Route 18:22		Route 18:23		Route 18:24	
STEP INITIATION		**STEP INITIATION**		**STEP INITIATION**		**STEP INITIATION**		**STEP INITIATION**		**STEP INITIATION**		**STEP INITIATION**		**STEP INITIATION**	
Go Mode	Auto	**Go Mode**	Auto	**Go Mode**	Auto	**Go Mode**	Auto	**Go Mode**	Auto	**Go Mode**	Auto	**Go Mode**	Auto	**Go Mode**	Auto
Radio Input	dio Input 1-	**Radio Input**	dio Input 1-	**Radio Input**	dio Input 1-	**Radio Input**	dio Input 1-	**Radio Input**	dio Input 1-	**Radio Input**	dio Input 1-	**Radio Input**	dio Input 1-	**Radio Input**	dio Input 1-
Hard Wire Input	N/A	**Hard Wire Input**	N/A	**Hard Wire Input**	N/A	**Hard Wire Input**	N/A	**Hard Wire Input**	N/A	**Hard Wire Input**	N/A	**Hard Wire Input**	N/A	**Hard Wire Input**	N/A
BIT	N/A	**BIT**	N/A	**BIT**	N/A	**BIT**	N/A	**BIT**	N/A	**BIT**	N/A	**BIT**	N/A	**BIT**	N/A
STEP ACTION		**STEP ACTION**		**STEP ACTION**		**STEP ACTION**		**STEP ACTION**		**EP ACTION**		**STEP ACTION**		**STEP ACTION**	
Function	Forward	**Function**	Rotate	**Function**	Forward	**Function**	Rotate	**Function**	Forward	**Function**	Rotate	**Function**	Forward	**Function**	Rotate
Speed	33	**Speed**	33	**Speed**	33	**Speed**	33	**Speed**	33	**Speed**	33	**Speed**	33	**Speed**	33
Navigation	DR	**Navigation**	DR	**Navigation**	DR	**Navigation**	DR	**Navigation**	DR	**Navigation**	DR	**Navigation**	DR	**Navigation**	DR
Direction	Center	**Direction**	Center	**Direction**	Center	**Direction**	Center	**Direction**	Center	**Direction**	Center	**Direction**	Center	**Direction**	Center
Size	62	**Size**	-90	**Size**	144	**Size**	-90	**Size**	331	**Size**	-90	**Size**	2284	**Size**	90
Loss Of Guidance	N/A	**Loss Of Guidance**	N/A	**Loss Of Guidance**	N/A	**Loss Of Guidance**	N/A	**Loss Of Guidance**	N/A	**Loss Of Guidance**	N/A	**Loss Of Guidance**	N/A	**Loss Of Guidance**	N/A
Obstacle Avoidance	1	**Obstacle Avoidance**	1	**Obstacle Avoidance**	1	**Obstacle Avoidance**	1	**Obstacle Avoidance**	1	**Obstacle Avoidance**	1	**Obstacle Avoidance**	1	**Obstacle Avoidance**	1
Output	N/A	**Output**	N/A	**Output**	N/A	**Output**	N/A	**Output**	N/A	**Output**	N/A	**Output**	N/A	**Output**	N/A
END OF STEP		**END OF STEP**		**END OF STEP**		**END OF STEP**		**END OF STEP**		**ID OF STEP**		**END OF STEP**		**END OF STEP**	
END MODE	Distance	**END MODE**	Distance	**END MODE**	Distance	**END MODE**	Distance	**END MODE**	Distance	**END MODE**	Distance	**END MODE**	Distance	**END MODE**	Distance
END ACTION	Merge	**END ACTION**	Merge	**END ACTION**	Merge	**END ACTION**	Merge	**END ACTION**	Merge	**END ACTION**	Merge	**END ACTION**	Merge	**END ACTION**	Merge
NEXT ROUTE	18	**NEXT ROUTE**	18	**NEXT ROUTE**	18	**NEXT ROUTE**	18	**NEXT ROUTE**	18	**NEXT ROUTE**	18	**NEXT ROUTE**	18	**NEXT ROUTE**	18
NEXT STEP	**18**	**NEXT STEP**	**19**	**NEXT STEP**	**20**	**NEXT STEP**	**21**	**NEXT STEP**	**22**	**NEXT STEP**	**23**	**NEXT STEP**	**24**	**NEXT STEP**	**25**

Route 18:25		Route 18:26		Route 18:27		Route 18:28		Route 18:29		Route 18:30		Route 18:31		Route 18:32	
STEP INITIATION		**STEP INITIATION**		**STEP INITIATION**		**STEP INITIATION**		**STEP INITIATION**		**STEP INITIATION**		**STEP INITIATION**		**STEP INITIATION**	
Go Mode	Auto	**Go Mode**	Auto	**Go Mode**	Auto	**Go Mode**	Auto	**Go Mode**	Auto	**Go Mode**	Auto	**Go Mode**	Auto	**Go Mode**	Auto
Radio Input	dio Input 1-	**Radio Input**	dio Input 1-	**Radio Input**	dio Input 1-	**Radio Input**	dio Input 1-	**Radio Input**	dio Input 1-	**Radio Input**	dio Input 1-	**Radio Input**	dio Input 1-	**Radio Input**	dio Input 1-
Hard Wire Input	N/A	**Hard Wire Input**	N/A	**Hard Wire Input**	N/A	**Hard Wire Input**	N/A	**Hard Wire Input**	N/A	**Hard Wire Input**	N/A	**Hard Wire Input**	N/A	**Hard Wire Input**	Cart prese
BIT	N/A	**BIT**	N/A	**BIT**	N/A	**BIT**	N/A	**BIT**	N/A	**BIT**	N/A	**BIT**	N/A	**BIT**	N/A
STEP ACTION		**STEP ACTION**		**STEP ACTION**		**STEP ACTION**		**STEP ACTION**		**STEP ACTION**		**STEP ACTION**		**STEP ACTION**	
Function	Forward	**Function**	Rotate	**Function**	Reverse	**Function**	Delay	**Function**	Forward	**Function**	Rotate	**Function**	Reverse	**Function**	Forward
Speed	33	**Speed**	33	**Speed**	33	**Speed**	33	**Speed**	33	**Speed**	33	**Speed**	33	**Speed**	33
Navigation	DR	**Navigation**	DR	**Navigation**	DR	**Navigation**	DR	**Navigation**	DR	**Navigation**	DR	**Navigation**	DR	**Navigation**	DR
Direction	Center	**Direction**	Center	**Direction**	Center	**Direction**	Center	**Direction**	Center	**Direction**	Center	**Direction**	Center	**Direction**	Center
Size	1240	**Size**	90	**Size**	279	**Size**	5	**Size**	164	**Size**	-90	**Size**	102	**Size**	102
Loss Of Guidance	N/A	**Loss Of Guidance**	N/A	**Loss Of Guidance**	N/A	**Loss Of Guidance**	N/A	**Loss Of Guidance**	N/A	**Loss Of Guidance**	N/A	**Loss Of Guidance**	N/A	**Loss Of Guidance**	N/A
Obstacle Avoidance	1	**Obstacle Avoidance**	1	**Obstacle Avoidance**	1	**Obstacle Avoidance**	1	**Obstacle Avoidance**	1	**Obstacle Avoidance**	1	**Obstacle Avoidance**	1	**Obstacle Avoidance**	1
Output	N/A	**Output**	N/A	**Output**	N/A	**Output**	#7 Pin Drop	**Output**		**Output**		**Output**	#6 pin up	**Output**	N/a
END OF STEP		**END OF STEP**		**END OF STEP**		**END OF STEP**		**END OF STEP**		**END OF STEP**		**END OF STEP**		**END OF STEP**	
END MODE	Distance	**END MODE**	Distance	**END MODE**	Distance	**END MODE**	time	**END MODE**	Distance	**END MODE**	Distance	**END MODE**	Distance	**END MODE**	Distance
END ACTION	Merge	**END ACTION**	Merge	**END ACTION**	Merge	**END ACTION**	Merge	**END ACTION**	Merge	**END ACTION**	Merge	**END ACTION**	Merge	**END ACTION**	Merge
NEXT ROUTE	18	**NEXT ROUTE**	18	**NEXT ROUTE**	18	**NEXT ROUTE**	18	**NEXT ROUTE**	18	**NEXT ROUTE**	18	**NEXT ROUTE**	18	**NEXT ROUTE**	18
NEXT STEP	**26**	**NEXT STEP**	**27**	**NEXT STEP**	**28**	**NEXT STEP**	**29**	**NEXT STEP**	**30**	**NEXT STEP**	**31**	**NEXT STEP**	**32**	**NEXT STEP**	**33**

Route 18:33		Route 18:34		Route 18:35		Route 18:36		Route 18:37		Route 18:38		Route 18:39		Route 18:40	
STEP INITIATION		STEP INITIATION		STEP INITIATION		STEP INITIATION		STEP INITIATION		STEP INITIATION		STEP INITIATION		STEP INITIATION	
Go Mode	Auto	Go Mode	Auto	Go Mode	Auto	Go Mode	Auto	Go Mode	Auto	Go Mode	Auto	Go Mode	Auto	Go Mode	Auto
Radio Input	dio Input 1-	Radio Input	dio Input 1-	Radio Input	dio Input 1-	Radio Input	dio Input 1-	Radio Input	dio Input 1-	Radio Input	dio Input 1-	Radio Input	dio Input 1-	Radio Input	dio Input 1-
Hard Wire Input	N/A	Hard Wire Input	N/A	Hard Wire Input	N/A	Hard Wire Input	N/A	Hard Wire Input	N/A	Hard Wire Input	N/A	Hard Wire Input	N/A	Hard Wire Input	N/A
BIT	N/A	BIT	N/A	BIT	N/A	BIT	N/A	BIT	N/A	BIT	N/A	BIT	N/A	BIT	N/A
STEP ACTION		STEP ACTION		STEP ACTION		STEP ACTION		STEP ACTION		STEP ACTION		STEP ACTION		STEP ACTION	
Function	Rotate	Function	Reverse	Function	Rotate	Function	Reverse	Function	Delay	Function	Forward	Function	Rotate	Function	Reverse
Speed	33	Speed	33	Speed	33	Speed	33	Speed	33	Speed	33	Speed	33	Speed	33
Navigation	DR	Navigation	DR	Navigation	DR	Navigation	DR	Navigation	DR	Navigation	DR	Navigation	DR	Navigation	DR
Direction	Center	Direction	Center	Direction	Center	Direction	Center	Direction	Center	Direction	Center	Direction	Center	Direction	Center
Size	90	Size	60	Size	-45	Size	99	Size	5	Size	99	Size	45	Size	104
Loss Of Guidance	N/A	Loss Of Guidance	N/A	Loss Of Guidance	N/A	Loss Of Guidance	N/A	Loss Of Guidance	N/A	Loss Of Guidance	N/A	Loss Of Guidance	N/A	Loss Of Guidance	N/A
Obstacle Avoidance	1	Obstacle Avoidance	1	Obstacle Avoidance	1	Obstacle Avoidance	1	Obstacle Avoidance	1	Obstacle Avoidance	1	Obstacle Avoidance	1	Obstacle Avoidance	1
Output	N/a	Output	N/a	Output	N/a	Output	N/a	Output	#7 pin drop	Output	N/a	Output	N/a	Output	#7 pin raise
END OF STEP		END OF STEP		END OF STEP		END OF STEP		END OF STEP		END OF STEP		END OF STEP		END OF STEP	
END MODE	Distance	END MODE	Distance	END MODE	Distance	END MODE	Distance	END MODE	time	END MODE	Distance	END MODE	Distance	END MODE	Distance
END ACTION	Merge	END ACTION	Merge	END ACTION	Merge	END ACTION	Merge	END ACTION	Merge	END ACTION	Merge	END ACTION	Merge	END ACTION	Merge
NEXT ROUTE	18	NEXT ROUTE	18	NEXT ROUTE	18	NEXT ROUTE	18	NEXT ROUTE	18	NEXT ROUTE	18	NEXT ROUTE	18	NEXT ROUTE	18
NEXT STEP	**34**	NEXT STEP	**35**	NEXT STEP	**36**	NEXT STEP	**37**	NEXT STEP	**38**	NEXT STEP	**39**	NEXT STEP	**40**	NEXT STEP	**41**

Route 18:41		Route 18:42		Route 18:43		Route 18:44		Route 18:45		Route 18:46		Route 18:47		Route 18:48	
STEP INITIATION		STEP INITIATION		STEP INITIATION		STEP INITIATION		STEP INITIATION		STEP INITIATION		STEP INITIATION		STEP INITIATION	
Go Mode	Auto	Go Mode	Auto	Go Mode	Auto	Go Mode	Auto	Go Mode	Auto	Go Mode	Auto	Go Mode	Auto	Go Mode	Auto
Radio Input	dio Input 1-	Radio Input	dio Input 1-	Radio Input	dio Input 1-	Radio Input	dio Input 1-	Radio Input	dio Input 1-	Radio Input	dio Input 1-	Radio Input	dio Input 1-	Radio Input	dio Input 1-
Hard Wire Input	N/A	Hard Wire Input	N/A	Hard Wire Input	N/A	Hard Wire Input	N/A	Hard Wire Input	N/A	Hard Wire Input	N/A	Hard Wire Input	N/A	Hard Wire Input	N/A
BIT	N/A	BIT	N/A	BIT	N/A	BIT	N/A	BIT	N/A	BIT	N/A	BIT	N/A	BIT	N/A
STEP ACTION		STEP ACTION		STEP ACTION		STEP ACTION		STEP ACTION		STEP ACTION		STEP ACTION		STEP ACTION	
Function	Forward	Function	Rotate	Function	Reverse	Function	Delay	Function	Forward	Function	Rotate	Function	Reverse	Function	Rotate
Speed	33	Speed	33	Speed	33	Speed	33	Speed	33	Speed	33	Speed	33	Speed	33
Navigation	DR	Navigation	DR	Navigation	DR	Navigation	DR	Navigation	DR	Navigation	DR	Navigation	DR	Navigation	DR
Direction	Center	Direction	Center	Direction	Center	Direction	Center	Direction	Center	Direction	Center	Direction	Center	Direction	Center
Size	164	Size	-90	Size	102	Size	5	Size	102	Size	90	Size	60	Size	-45
Loss Of Guidance	N/A	Loss Of Guidance	N/A	Loss Of Guidance	N/A	Loss Of Guidance	N/A	Loss Of Guidance	N/A	Loss Of Guidance	N/A	Loss Of Guidance	N/A	Loss Of Guidance	N/A
Obstacle Avoidance	1	Obstacle Avoidance	1	Obstacle Avoidance	1	Obstacle Avoidance	1	Obstacle Avoidance	1	Obstacle Avoidance	1	Obstacle Avoidance	1	Obstacle Avoidance	1
Output	N/A	Output	N/A	Output	N/A	Output	#7 Pin Drop	Output	N/a	Output	N/a	Output	N/a	Output	N/a
END OF STEP		END OF STEP		END OF STEP		END OF STEP		END OF STEP		END OF STEP		END OF STEP		END OF STEP	
END MODE	Distance	END MODE	Distance	END MODE	Distance	END MODE	Time	END MODE	Distance	END MODE	Distance	END MODE	Distance	END MODE	Distance
END ACTION	Merge	END ACTION	Merge	END ACTION	Merge	END ACTION	Merge	END ACTION	Merge	END ACTION	Merge	END ACTION	Merge	END ACTION	Merge
NEXT ROUTE	18	NEXT ROUTE	18	NEXT ROUTE	18	NEXT ROUTE	18	NEXT ROUTE	18	NEXT ROUTE	18	NEXT ROUTE	18	NEXT ROUTE	18
NEXT STEP	**42**	NEXT STEP	**43**	NEXT STEP	**44**	NEXT STEP	**45**	NEXT STEP	**46**	NEXT STEP	**47**	NEXT STEP	**48**	NEXT STEP	**49**

Route 18:49		Route 18:50		Route 18:51		Route 18:52		Route 18:53		Route 18:54		Route 18:55		Route 18:56	
STEP INITIATION		STEP INITIATION		STEP INITIATION		STEP INITIATION		STEP INITIATION		STEP INITIATION		STEP INITIATION		STEP INITIATION	
Go Mode	Auto	Go Mode	Auto	Go Mode	Auto	Go Mode	Auto	Go Mode	Auto	Go Mode	Auto	Go Mode	Auto	Go Mode	Auto
Radio Input	dio Input 1-	Radio Input	dio Input 1-	Radio Input	dio Input 1-	Radio Input	dio Input 1-	Radio Input	dio Input 1-	Radio Input	dio Input 1-	Radio Input	dio Input 1-	Radio Input	dio Input 1-
Hard Wire Input	N/A	Hard Wire Input	Cart Prese	Hard Wire Input		Hard Wire Input		Hard Wire Input		Hard Wire Input		Hard Wire Input		Hard Wire Input	
BIT	N/A	BIT	N/A	BIT	N/A	BIT	N/A	BIT	N/A	BIT	N/A	BIT	N/A	BIT	N/A
STEP ACTION		STEP ACTION		STEP ACTION		STEP ACTION		STEP ACTION		STEP ACTION		STEP ACTION		STEP ACTION	
Function	Reverse	Function	Forward	Function	Rotate	Function	Forward	Function	Rotate	Function	Forward	Function	Rotate	Function	Forward
Speed	33	Speed	33	Speed	33	Speed	33	Speed	33	Speed	33	Speed	33	Speed	33
Navigation	DR	Navigation	DR	Navigation	DR	Navigation	DR	Navigation	DR	Navigation	DR	Navigation	DR	Navigation	DR
Direction	Center	Direction	Center	Direction	Center	Direction	Center	Direction	Center	Direction	Center	Direction	Center	Direction	Center
Size	99	Size	99	Size	45	Size	174	Size	90	Size	1240	Size	-90	Size	2284
Loss Of Guidance	N/A	Loss Of Guidance	N/A	Loss Of Guidance	N/A	Loss Of Guidance	N/A	Loss Of Guidance	N/A	Loss Of Guidance	N/A	Loss Of Guidance	N/A	Loss Of Guidance	N/A
Obstacle Avoidance	1	Obstacle Avoidance	1	Obstacle Avoidance	1	Obstacle Avoidance	1	Obstacle Avoidance	1	Obstacle Avoidance	1	Obstacle Avoidance	1	Obstacle Avoidance	1
Output	J6 Pin Raise	Output	N/a	Output	N/a	Output	N/a	Output	N/a	Output	N/a	Output	N/a	Output	N/a
END OF STEP		END OF STEP		END OF STEP		END OF STEP		END OF STEP		END OF STEP		END OF STEP		END OF STEP	
END MODE	Distance	END MODE	Distance	END MODE	Distance	END MODE	Distance	END MODE	Distance	END MODE	Distance	END MODE	Distance	END MODE	Distance
END ACTION	Merge	END ACTION	Merge	END ACTION	Merge	END ACTION	Merge	END ACTION	Merge	END ACTION	Merge	END ACTION	Merge	END ACTION	Merge
NEXT ROUTE	18	NEXT ROUTE	18	NEXT ROUTE	18	NEXT ROUTE	18	NEXT ROUTE	18	NEXT ROUTE	18	NEXT ROUTE	18	NEXT ROUTE	18
NEXT STEP	**50**	NEXT STEP	**51**	NEXT STEP	**52**	NEXT STEP	**53**	NEXT STEP	**54**	NEXT STEP	**55**	NEXT STEP	**56**	NEXT STEP	**57**

Route 18:57		Route 18:58		Route 18:59		Route 18:60		Route 18:61		Route 18:62		Route 18:63		Route 18:64	
STEP INITIATION		STEP INITIATION		STEP INITIATION		STEP INITIATION		STEP INITIATION		STEP INITIATION		STEP INITIATION		STEP INITIATION	
Go Mode	Auto	Go Mode	Auto	Go Mode	Auto	Go Mode	Auto	Go Mode	Auto	Go Mode	Auto	Go Mode	Auto	Go Mode	Auto
Radio Input	dio Input 1-	Radio Input	dio Input 1-	Radio Input	dio Input 1-	Radio Input	dio Input 1-	Radio Input	dio Input 1-	Radio Input	dio Input 1-	Radio Input	dio Input 1-	Radio Input	dio Input 1-
Hard Wire Input		Hard Wire Input		Hard Wire Input		Hard Wire Input		Hard Wire Input		Hard Wire Input		Hard Wire Input		Hard Wire Input	
BIT	N/A	BIT	N/A	BIT	N/A	BIT	N/A	BIT	N/A	BIT	N/A	BIT	N/A	BIT	N/A
STEP ACTION		STEP ACTION		STEP ACTION		STEP ACTION		STEP ACTION		STEP ACTION		STEP ACTION		STEP ACTION	
Function	Rotate	Function	Forward	Function	Rotate	Function	Forward	Function	Rotate	Function	Reverse	Function	Dellay	Function	Forward
Speed	33	Speed	33	Speed	33	Speed	33	Speed	33	Speed	33	Speed	33	Speed	33
Navigation	DR	Navigation	DR	Navigation	DR	Navigation	DR	Navigation	DR	Navigation	DR	Navigation	DR	Navigation	DR
Direction	Center	Direction	Center	Direction	Center	Direction	Center	Direction	Center	Direction	Center	Direction	Center	Direction	Center
Size	90	Size	331	Size	90	Size	144	Size	-90	Size	62	Size	5	Size	62
Loss Of Guidance	N/A	Loss Of Guidance	N/A	Loss Of Guidance	N/A	Loss Of Guidance	N/A	Loss Of Guidance	N/A	Loss Of Guidance	N/A	Loss Of Guidance	N/A	Loss Of Guidance	N/A
Obstacle Avoidance	1	Obstacle Avoidance	1	Obstacle Avoidance	1	Obstacle Avoidance	1	Obstacle Avoidance	1	Obstacle Avoidance	1	Obstacle Avoidance	1	Obstacle Avoidance	1
Output	N/a	Output	N/a	Output	N/a	Output	N/a	Output	N/a	Output	N/a	Output	#7 Pin Drop	Output	
END OF STEP		END OF STEP		END OF STEP		END OF STEP		END OF STEP		END OF STEP		END OF STEP		END OF STEP	
END MODE	Distance	END MODE	Distance	END MODE	Distance	END MODE	Distance	END MODE	Distance	END MODE	Distance	END MODE	time	END MODE	Distance
END ACTION	Merge	END ACTION	Merge	END ACTION	Merge	END ACTION	Merge	END ACTION	Merge	END ACTION	Merge	END ACTION	Merge	END ACTION	Merge
NEXT ROUTE	18	NEXT ROUTE	18	NEXT ROUTE	18	NEXT ROUTE	18	NEXT ROUTE	18	NEXT ROUTE	18	NEXT ROUTE	18	NEXT ROUTE	18
NEXT STEP	**58**	NEXT STEP	**59**	NEXT STEP	**60**	NEXT STEP	**61**	NEXT STEP	**62**	NEXT STEP	**63**	NEXT STEP	**64**	NEXT STEP	**65**

Route 18:65		Route 18:66		Route 18:67		Route 18:68		Route 18:69		Route 18:70		Route 18:71		Route 18:72	
STEP INITIATION		STEP INITIATION		STEP INITIATION		STEP INITIATION		STEP INITIATION		STEP INITIATION		STEP INITIATION		STEP INITIATION	
Go Mode	Auto	Go Mode	Auto	Go Mode	Auto	Go Mode	Auto	Go Mode	Auto	Go Mode	Auto	Go Mode	Auto	Go Mode	Auto
Radio Input	dio Input 1-	Radio Input	dio Input 1-	Radio Input	dio Input 1-	Radio Input	dio Input 1-	Radio Input	dio Input 1-	Radio Input	dio Input 1-	Radio Input	dio Input 1-	Radio Input	dio Input 1-
Hard Wire Input		Hard Wire Input		Hard Wire Input		Hard Wire Input		Hard Wire Input		Hard Wire Input		Hard Wire Input	N/a	Hard Wire Input	N/a
BIT	N/A	BIT	N/A	BIT	N/A	BIT	N/A	BIT	N/A	BIT	N/A	BIT	N/A	BIT	N/A
STEP ACTION		STEP ACTION		STEP ACTION		STEP ACTION		STEP ACTION		STEP ACTION		STEP ACTION		STEP ACTION	
Function	Rotate	Function	Forward	Function	Rotate	Function	Forward	Function	Rotate	Function	Forward	Function	Rotate	Function	Forward
Speed	33	Speed	33	Speed	33	Speed	33	Speed	33	Speed	33	Speed	33	Speed	33
Navigation	DR	Navigation	DR	Navigation	DR	Navigation	DR	Navigation	DR	Navigation	DR	Navigation	DR	Navigation	DR
Direction	Center	Direction	Center	Direction	Center	Direction	Center	Direction	Center	Direction	Center	Direction	Center	Direction	Center
Size	-90	Size	144	Size	-90	Size	331	Size	-90	Size	2284	Size	90	Size	962
Loss Of Guidance	N/A	Loss Of Guidance	N/A	Loss Of Guidance	N/A	Loss Of Guidance	N/A	Loss Of Guidance	N/A	Loss Of Guidance	N/A	Loss Of Guidance	N/A	Loss Of Guidance	N/A
Obstacle Avoidance	1	Obstacle Avoidance	1	Obstacle Avoidance	1	Obstacle Avoidance	1	Obstacle Avoidance	1	Obstacle Avoidance	1	Obstacle Avoidance	1	Obstacle Avoidance	1
Output		Output		Output		Output		Output		Output		Output	N/a	Output	N/a
END OF STEP		END OF STEP		END OF STEP		END OF STEP		END OF STEP		END OF STEP		END OF STEP		END OF STEP	
END MODE	Distance	END MODE	Distance	END MODE	Distance	END MODE	Distance	END MODE	Distance	END MODE	Distance	END MODE	Distance	END MODE	Distance
END ACTION	Merge	END ACTION	Merge	END ACTION	Merge	END ACTION	Merge	END ACTION	Merge	END ACTION	Merge	END ACTION	Merge	END ACTION	Merge
NEXT ROUTE	18	NEXT ROUTE	18	NEXT ROUTE	18	NEXT ROUTE	18	NEXT ROUTE	18	NEXT ROUTE	18	NEXT ROUTE	18	NEXT ROUTE	18
NEXT STEP	66	NEXT STEP	67	NEXT STEP	68	NEXT STEP	69	NEXT STEP	70	NEXT STEP	71	NEXT STEP	72	NEXT STEP	73

Route 18:73		Route 18:74		Route 18:75		Route 18:76		Route 18:77		Route 18:78		Route 0: 1	
STEP INITIATION		STEP INITIATION		STEP INITIATION		STEP INITIATION		STEP INITIATION		STEP INITIATION		STEP INITIATION	
Go Mode	Auto	Go Mode	Auto	Go Mode	Auto	Go Mode	Auto	Go Mode	Auto	Go Mode	Auto	Go Mode	nput Trigge
Radio Input	dio Input 1-	Radio Input	dio Input 1-	Radio Input	dio Input 1-	Radio Input	dio Input 1-	Radio Input	dio Input 1-	Radio Input	dio Input 1-	Radio Input	dio Input 1-
Hard Wire Input	N/a	Hard Wire Input	N/a	Hard Wire Input	N/a	Hard Wire Input	N/a	Hard Wire Input	N/a	Hard Wire Input	N/a	Hard Wire Input	N/a
BIT	N/A	BIT	N/A	BIT	N/A	BIT	N/A	BIT	N/A	BIT	N/A	BIT	BIT #1-#24
STEP ACTION		STEP ACTION		STEP ACTION		STEP ACTION		STEP ACTION		STEP ACTION		STEP ACTION	
Function	Rotate	Function	Forward	Function	Rotate	Function	Forward	Function	Rotate	Function	Reverse	Function	Auto
Speed	33	Speed	33	Speed	33	Speed	33	Speed	33	Speed	33	Speed	33
Navigation	DR	Navigation	DR	Navigation	DR	Navigation	DR	Navigation	DR	Navigation	DR	Navigation	DR
Direction	Center	Direction	Center	Direction	Center	Direction	Center	Direction	Center	Direction	Center	Direction	Center
Size	-90	Size	525	Size	90	Size	417	Size	-90	Size	66	Size	66
Loss Of Guidance	N/A	Loss Of Guidance	N/A	Loss Of Guidance	N/A	Loss Of Guidance	N/A	Loss Of Guidance	N/A	Loss Of Guidance	N/A	Loss Of Guidance	N/A
Obstacle Avoidance	1	Obstacle Avoidance	1	Obstacle Avoidance	1	Obstacle Avoidance	1	Obstacle Avoidance	1	Obstacle Avoidance	1	Obstacle Avoidance	1
Output	N/a	Output	N/a	Output	N/a	Output	N/a	Output	N/a	Output	N/a	Output	N/a
END OF STEP		END OF STEP		END OF STEP		END OF STEP		END OF STEP		END OF STEP		END OF STEP	
END MODE	Distance	END MODE	Distance	END MODE	Distance	END MODE	Distance	END MODE	Distance	END MODE	Distance	END MODE	Distance
END ACTION	Merge	END ACTION	Merge	END ACTION	Merge	END ACTION	Merge	END ACTION	Merge	END ACTION	Merge	END ACTION	Merge
NEXT ROUTE	18	NEXT ROUTE	18	NEXT ROUTE	18	NEXT ROUTE	18	NEXT ROUTE	18	NEXT ROUTE	0	NEXT ROUTE	0
NEXT STEP	74	NEXT STEP	75	NEXT STEP	76	NEXT STEP	77	NEXT STEP	78	NEXT STEP	1	NEXT STEP	1

Tier 3 Route 19

Route 19:1		Route 19:2		Route 19:3		Route 19:4		Route 19:5		Route 19:6		Route 19:7		Route 19:8	
STEP INITIATION		**STEP INITIATION**		**STEP INITIATION**		**STEP INITIATION**		**STEP INITIATION**		**STEP INITIATION**		**STEP INITIATION**		**STEP INITIATION**	
Go Mode	nput Triggers	**Go Mode**	Auto	**Go Mode**	Auto	**Go Mode**	Auto	**Go Mode**	Auto	**Go Mode**	Auto	**Go Mode**	Auto	**Go Mode**	Auto
Radio Input	adio Input 1-2	**Radio Input**	dio Input 1-	**Radio Input**	dio Input 1-	**Radio Input**	dio Input 1-	**Radio Input**	dio Input 1-	**Radio Input**	dio Input 1-	**Radio Input**	dio Input 1-	**Radio Input**	dio Input 1-
Hard Wire Input	N/A	**Hard Wire Input**	N/A	**Hard Wire Input**	N/A	**Hard Wire Input**	N/A	**Hard Wire Input**	N/A	**Hard Wire Input**	N/A	**Hard Wire Input**	N/A	**Hard Wire Input**	N/A
BIT	Bit #1 off	**BIT**	N/A	**BIT**	N/A	**BIT**	N/A	**BIT**	N/A	**BIT**	N/A	**BIT**	N/A	**BIT**	N/A
Bit#12 On, #14 On	it #5 and 6 Off														
Home Position RFID	it #7 and 9 of														
	t #8 and 10 o														
STEP ACTION		**STEP ACTION**		**STEP ACTION**		**STEP ACTION**		**STEP ACTION**		**STEP ACTION**		**STEP ACTION**		**STEP ACTION**	
Function	Dispatch	**Function**	Forward	**Function**	Rotate	**Function**	Forward	**Function**	Rotate	**Function**	Forward	**Function**	Rotate	**Function**	Forward
Speed	N/A	**Speed**	33	**Speed**	33	**Speed**	33	**Speed**	33	**Speed**	33	**Speed**	33	**Speed**	33
Navigation	N/A	**Navigation**	DR	**Navigation**	DR	**Navigation**	DR	**Navigation**	DR	**Navigation**	DR	**Navigation**	DR	**Navigation**	DR
Direction	N/A	**Direction**	Center	**Direction**	Center	**Direction**	Center	**Direction**	Center	**Direction**	Center	**Direction**	Center	**Direction**	Center
Size	N/A	**Size**	66	**Size**	-90	**Size**	417	**Size**	-90	**Size**	525	**Size**	90	**Size**	962
Loss Of Guidance	N/A	**Loss Of Guidance**	N/A	**Loss Of Guidance**	N/A	**Loss Of Guidance**	N/A	**Loss Of Guidance**	N/A	**Loss Of Guidance**	N/A	**Loss Of Guidance**	N/A	**Loss Of Guidance**	N/A
Obstacle Avoidance	N/A	**Obstacle Avoidance**	1	**Obstacle Avoidance**	1	**Obstacle Avoidance**	1	**Obstacle Avoidance**	1	**Obstacle Avoidance**	1	**Obstacle Avoidance**	1	**Obstacle Avoidance**	1
Output	N/A	**Output**	N/A	**Output**	N/A	**Output**	N/A	**Output**	N/A	**Output**	N/A	**Output**	N/A	**Output**	N/A
END OF STEP		**END OF STEP**		**END OF STEP**		**END OF STEP**		**END OF STEP**		**END OF STEP**		**END OF STEP**		**END OF STEP**	
END MODE	N/A	**END MODE**	Distance	**END MODE**	Distance	**END MODE**	Distance	**END MODE**	Distance	**END MODE**	Distance	**END MODE**	Distance	**END MODE**	Distance
END ACTION	e Bit #12, #1	**END ACTION**	Merge	**END ACTION**	Merge	**END ACTION**	Merge	**END ACTION**	Merge	**END ACTION**	Merge	**END ACTION**	Merge	**END ACTION**	Merge
NEXT ROUTE	19	**NEXT ROUTE**	19	**NEXT ROUTE**	19	**NEXT ROUTE**	19	**NEXT ROUTE**	19	**NEXT ROUTE**	19	**NEXT ROUTE**	19	**NEXT ROUTE**	19
NEXT STEP	**2**	**NEXT STEP**	**3**	**NEXT STEP**	**4**	**NEXT STEP**	**5**	**NEXT STEP**	**6**	**NEXT STEP**	**7**	**NEXT STEP**	**8**	**NEXT STEP**	**9**

Route 19:9		Route 19:10		Route 19:11		Route 19:12		Route 19:13		Route 19:14		Route 19:15		Route 19:16	
STEP INITIATION		**STEP INITIATION**		**STEP INITIATION**		**STEP INITIATION**		**STEP INITIATION**		**STEP INITIATION**		**STEP INITIATION**		**STEP INITIATION**	
Go Mode	Auto	**Go Mode**	Auto	**Go Mode**	Auto	**Go Mode**	Auto	**Go Mode**	Auto	**Go Mode**	Auto	**Go Mode**	Auto	**Go Mode**	Auto
Radio Input	dio Input 1-	**Radio Input**	dio Input 1-	**Radio Input**	dio Input 1-	**Radio Input**	dio Input 1-	**Radio Input**	dio Input 1-	**Radio Input**	dio Input 1-	**Radio Input**	dio Input 1-	**Radio Input**	dio Input 1-
Hard Wire Input	N/A	**Hard Wire Input**	N/A	**Hard Wire Input**	N/A	**Hard Wire Input**	N/A	**Hard Wire Input**	N/A	**Hard Wire Input**	N/A	**Hard Wire Input**	N/A	**Hard Wire Input**	N/A
BIT	N/A	**BIT**	N/A	**BIT**	N/A	**BIT**	N/A	**BIT**	N/A	**BIT**	N/A	**BIT**	N/A	**BIT**	N/A
STEP ACTION		**STEP ACTION**		**STEP ACTION**		**STEP ACTION**		**STEP ACTION**		**STEP ACTION**		**STEP ACTION**		**STEP ACTION**	
Function	Rotate	**Function**	Forward	**Function**	Rotate	**Function**	Forward	**Function**	Rotate	**Function**	Forward	**Function**	Rotate	**Function**	Reverse
Speed	33	**Speed**	33	**Speed**	33	**Speed**	33	**Speed**	33	**Speed**	33	**Speed**	33	**Speed**	33
Navigation	DR	**Navigation**	DR	**Navigation**	DR	**Navigation**	DR	**Navigation**	DR	**Navigation**	DR	**Navigation**	DR	**Navigation**	DR
Direction	Center	**Direction**	Center	**Direction**	Center	**Direction**	Center	**Direction**	Center	**Direction**	Center	**Direction**	Center	**Direction**	Center
Size	-90	**Size**	2284	**Size**	90	**Size**	331	**Size**	90	**Size**	208	**Size**	-90	**Size**	62
Loss Of Guidance	N/A	**Loss Of Guidance**	N/A	**Loss Of Guidance**	N/A	**Loss Of Guidance**	N/A	**Loss Of Guidance**	N/A	**Loss Of Guidance**	N/A	**Loss Of Guidance**	N/A	**Loss Of Guidance**	N/A
Obstacle Avoidance	1	**Obstacle Avoidance**	1	**Obstacle Avoidance**	1	**Obstacle Avoidance**	1	**Obstacle Avoidance**	1	**Obstacle Avoidance**	1	**Obstacle Avoidance**	1	**Obstacle Avoidance**	1
Output	N/A	**Output**	N/A	**Output**	N/A	**Output**	N/A	**Output**	N/A	**Output**	N/A	**Output**	N/A	**Output**	#6 Pin Up
END OF STEP		**END OF STEP**		**END OF STEP**		**END OF STEP**		**END OF STEP**		**END OF STEP**		**END OF STEP**		**END OF STEP**	
END MODE	Distance	**END MODE**	Distance	**END MODE**	Distance	**END MODE**	Distance	**END MODE**	Distance	**END MODE**	Distance	**END MODE**	Distance	**END MODE**	Distance
END ACTION	Merge	**END ACTION**	Merge	**END ACTION**	Merge	**END ACTION**	Merge	**END ACTION**	Merge	**END ACTION**	Merge	**END ACTION**	Merge	**END ACTION**	Merge
NEXT ROUTE	19	**NEXT ROUTE**	19	**NEXT ROUTE**	19	**NEXT ROUTE**	19	**NEXT ROUTE**	19	**NEXT ROUTE**	19	**NEXT ROUTE**	19	**NEXT ROUTE**	19
NEXT STEP	**10**	**NEXT STEP**	**11**	**NEXT STEP**	**12**	**NEXT STEP**	**13**	**NEXT STEP**	**14**	**NEXT STEP**	**15**	**NEXT STEP**	**16**	**NEXT STEP**	**17**

Route 19:17		Route 19:18		Route 19:19		Route 19:20		Route 19:21		Route 19:22		Route 19:23		Route 19:24	
STEP INITIATION		**STEP INITIATION**		**STEP INITIATION**		**STEP INITIATION**		**STEP INITIATION**		**STEP INITIATION**		**STEP INITIATION**		**STEP INITIATION**	
Go Mode	Auto	**Go Mode**	Auto	**Go Mode**	Auto	**Go Mode**	Auto	**Go Mode**	Auto	**Go Mode**	Auto	**Go Mode**	Auto	**Go Mode**	Auto
Radio Input	dio Input 1-	**Radio Input**	dio Input 1-	**Radio Input**	dio Input 1-	**Radio Input**	dio Input 1-	**Radio Input**	dio Input 1-	**Radio Input**	dio Input 1-	**Radio Input**	dio Input 1-	**Radio Input**	dio Input 1-
Hard Wire Input	N/A	**Hard Wire Input**	N/A	**Hard Wire Input**	N/A	**Hard Wire Input**	N/A	**Hard Wire Input**	N/A	**Hard Wire Input**	N/A	**Hard Wire Input**	N/A	**Hard Wire Input**	N/A
BIT	N/A	**BIT**	N/A	**BIT**	N/A	**BIT**	N/A	**BIT**	N/A	**BIT**	N/A	**BIT**	N/A	**BIT**	N/A
STEP ACTION		**STEP ACTION**		**STEP ACTION**		**STEP ACTION**		**STEP ACTION**		**EP ACTION**		**STEP ACTION**		**STEP ACTION**	
Function	Forward	**Function**	Rotate	**Function**	Forward	**Function**	Rotate	**Function**	Forward	**Function**	Rotate	**Function**	Forward	**Function**	Rotate
Speed	33	**Speed**	33	**Speed**	33	**Speed**	33	**Speed**	33	**Speed**	33	**Speed**	33	**Speed**	33
Navigation	DR	**Navigation**	DR	**Navigation**	DR	**Navigation**	DR	**Navigation**	DR	**Navigation**	DR	**Navigation**	DR	**Navigation**	DR
Direction	Center	**Direction**	Center	**Direction**	Center	**Direction**	Center	**Direction**	Center	**Direction**	Center	**Direction**	Center	**Direction**	Center
Size	62	**Size**	-90	**Size**	208	**Size**	-90	**Size**	331	**Size**	-90	**Size**	2284	**Size**	90
Loss Of Guidance	N/A	**Loss Of Guidance**	N/A	**Loss Of Guidance**	N/A	**Loss Of Guidance**	N/A	**Loss Of Guidance**	N/A	**Loss Of Guidance**	N/A	**Loss Of Guidance**	N/A	**Loss Of Guidance**	N/A
Obstacle Avoidance	1	**Obstacle Avoidance**	1	**Obstacle Avoidance**	1	**Obstacle Avoidance**	1	**Obstacle Avoidance**	1	**Obstacle Avoidance**	1	**Obstacle Avoidance**	1	**Obstacle Avoidance**	1
Output	N/A	**Output**	N/A	**Output**	N/A	**Output**	N/A	**Output**	N/A	**Output**	N/A	**Output**	N/A	**Output**	N/A
END OF STEP		**END OF STEP**		**END OF STEP**		**END OF STEP**		**END OF STEP**		**ID OF STEP**		**END OF STEP**		**END OF STEP**	
END MODE	Distance	**END MODE**	Distance	**END MODE**	Distance	**END MODE**	Distance	**END MODE**	Distance	**END MODE**	Distance	**END MODE**	Distance	**END MODE**	Distance
END ACTION	Merge	**END ACTION**	Merge	**END ACTION**	Merge	**END ACTION**	Merge	**END ACTION**	Merge	**END ACTION**	Merge	**END ACTION**	Merge	**END ACTION**	Merge
NEXT ROUTE	19	**NEXT ROUTE**	19	**NEXT ROUTE**	19	**NEXT ROUTE**	19	**NEXT ROUTE**	19	**NEXT ROUTE**	19	**NEXT ROUTE**	19	**NEXT ROUTE**	19
NEXT STEP	**18**	**NEXT STEP**	**19**	**NEXT STEP**	**20**	**NEXT STEP**	**21**	**NEXT STEP**	**22**	**NEXT STEP**	**23**	**NEXT STEP**	**24**	**NEXT STEP**	**25**

Route 19:25		Route 19:26		Route 19:27		Route 19:28		Route 19:29		Route 19:30		Route 19:31		Route 19:32	
STEP INITIATION		**STEP INITIATION**		**STEP INITIATION**		**STEP INITIATION**		**STEP INITIATION**		**STEP INITIATION**		**STEP INITIATION**		**STEP INITIATION**	
Go Mode	Auto	**Go Mode**	Auto	**Go Mode**	Auto	**Go Mode**	Auto	**Go Mode**	Auto	**Go Mode**	Auto	**Go Mode**	Auto	**Go Mode**	Auto
Radio Input	dio Input 1-	**Radio Input**	dio Input 1-	**Radio Input**	dio Input 1-	**Radio Input**	dio Input 1-	**Radio Input**	dio Input 1-	**Radio Input**	dio Input 1-	**Radio Input**	dio Input 1-	**Radio Input**	dio Input 1-
Hard Wire Input	N/A	**Hard Wire Input**	N/A	**Hard Wire Input**	N/A	**Hard Wire Input**	N/A	**Hard Wire Input**	N/A	**Hard Wire Input**	N/A	**Hard Wire Input**	N/A	**Hard Wire Input**	Cart prese
BIT	N/A	**BIT**	N/A	**BIT**	N/A	**BIT**	N/A	**BIT**	N/A	**BIT**	N/A	**BIT**	N/A	**BIT**	N/A
STEP ACTION		**STEP ACTION**		**STEP ACTION**		**STEP ACTION**		**STEP ACTION**		**STEP ACTION**		**STEP ACTION**		**STEP ACTION**	
Function	Forward	**Function**	Rotate	**Function**	Reverse	**Function**	Delay	**Function**	Forward	**Function**	Rotate	**Function**	Reverse	**Function**	Forward
Speed	33	**Speed**	33	**Speed**	33	**Speed**	33	**Speed**	33	**Speed**	33	**Speed**	33	**Speed**	33
Navigation	DR	**Navigation**	DR	**Navigation**	DR	**Navigation**	DR	**Navigation**	DR	**Navigation**	DR	**Navigation**	DR	**Navigation**	DR
Direction	Center	**Direction**	Center	**Direction**	Center	**Direction**	Center	**Direction**	Center	**Direction**	Center	**Direction**	Center	**Direction**	Center
Size	1240	**Size**	90	**Size**	279	**Size**	5	**Size**	164	**Size**	-90	**Size**	102	**Size**	102
Loss Of Guidance	N/A	**Loss Of Guidance**	N/A	**Loss Of Guidance**	N/A	**Loss Of Guidance**	N/A	**Loss Of Guidance**	N/A	**Loss Of Guidance**	N/A	**Loss Of Guidance**	N/A	**Loss Of Guidance**	N/A
Obstacle Avoidance	1	**Obstacle Avoidance**	1	**Obstacle Avoidance**	1	**Obstacle Avoidance**	1	**Obstacle Avoidance**	1	**Obstacle Avoidance**	1	**Obstacle Avoidance**	1	**Obstacle Avoidance**	1
Output	N/A	**Output**	N/A	**Output**	N/A	**Output**	#7 Pin Drop	**Output**		**Output**		**Output**	#6 pin up	**Output**	N/a
END OF STEP		**END OF STEP**		**END OF STEP**		**END OF STEP**		**END OF STEP**		**END OF STEP**		**END OF STEP**		**END OF STEP**	
END MODE	Distance	**END MODE**	Distance	**END MODE**	Distance	**END MODE**	time	**END MODE**	Distance	**END MODE**	Distance	**END MODE**	Distance	**END MODE**	Distance
END ACTION	Merge	**END ACTION**	Merge	**END ACTION**	Merge	**END ACTION**	Merge	**END ACTION**	Merge	**END ACTION**	Merge	**END ACTION**	Merge	**END ACTION**	Merge
NEXT ROUTE	19	**NEXT ROUTE**	19	**NEXT ROUTE**	19	**NEXT ROUTE**	19	**NEXT ROUTE**	19	**NEXT ROUTE**	19	**NEXT ROUTE**	19	**NEXT ROUTE**	19
NEXT STEP	**26**	**NEXT STEP**	**27**	**NEXT STEP**	**28**	**NEXT STEP**	**29**	**NEXT STEP**	**30**	**NEXT STEP**	**31**	**NEXT STEP**	**32**	**NEXT STEP**	**33**

Route 19:33		Route 19:34		Route 19:35		Route 19:36		Route 19:37		Route 19:38		Route 19:39		Route 19:40	
STEP INITIATION		STEP INITIATION		STEP INITIATION		STEP INITIATION		STEP INITIATION		STEP INITIATION		STEP INITIATION		STEP INITIATION	
Go Mode	Auto	Go Mode	Auto	Go Mode	Auto	Go Mode	Auto	Go Mode	Auto	Go Mode	Auto	Go Mode	Auto	Go Mode	Auto
Radio Input	dio Input 1-	Radio Input	dio Input 1-	Radio Input	dio Input 1-	Radio Input	dio Input 1-	Radio Input	dio Input 1-	Radio Input	dio Input 1-	Radio Input	dio Input 1-	Radio Input	dio Input 1-
Hard Wire Input	N/A	Hard Wire Input	N/A	Hard Wire Input	N/A	Hard Wire Input	N/A	Hard Wire Input	N/A	Hard Wire Input	N/A	Hard Wire Input	N/A	Hard Wire Input	N/A
BIT	N/A	BIT	N/A	BIT	N/A	BIT	N/A	BIT	N/A	BIT	N/A	BIT	N/A	BIT	N/A
STEP ACTION		STEP ACTION		STEP ACTION		STEP ACTION		STEP ACTION		STEP ACTION		STEP ACTION		STEP ACTION	
Function	Rotate	Function	Reverse	Function	Rotate	Function	Reverse	Function	Delay	Function	Forward	Function	Rotate	Function	Reverse
Speed	33	Speed	33	Speed	33	Speed	33	Speed	33	Speed	33	Speed	33	Speed	33
Navigation	DR	Navigation	DR	Navigation	DR	Navigation	DR	Navigation	DR	Navigation	DR	Navigation	DR	Navigation	DR
Direction	Center	Direction	Center	Direction	Center	Direction	Center	Direction	Center	Direction	Center	Direction	Center	Direction	Center
Size	90	Size	60	Size	-45	Size	99	Size	5	Size	99	Size	45	Size	104
Loss Of Guidance	N/A	Loss Of Guidance	N/A	Loss Of Guidance	N/A	Loss Of Guidance	N/A	Loss Of Guidance	N/A	Loss Of Guidance	N/A	Loss Of Guidance	N/A	Loss Of Guidance	N/A
Obstacle Avoidance	1	Obstacle Avoidance	1	Obstacle Avoidance	1	Obstacle Avoidance	1	Obstacle Avoidance	1	Obstacle Avoidance	1	Obstacle Avoidance	1	Obstacle Avoidance	1
Output	N/a	Output	N/a	Output	N/a	Output	N/a	Output	#7 pin drop	Output	N/a	Output	N/a	Output	#7 pin raise
END OF STEP		END OF STEP		END OF STEP		END OF STEP		END OF STEP		END OF STEP		END OF STEP		END OF STEP	
END MODE	Distance	END MODE	Distance	END MODE	Distance	END MODE	Distance	END MODE	time	END MODE	Distance	END MODE	Distance	END MODE	Distance
END ACTION	Merge	END ACTION	Merge	END ACTION	Merge	END ACTION	Merge	END ACTION	Merge	END ACTION	Merge	END ACTION	Merge	END ACTION	Merge
NEXT ROUTE	19	NEXT ROUTE	19	NEXT ROUTE	19	NEXT ROUTE	19	NEXT ROUTE	19	NEXT ROUTE	19	NEXT ROUTE	19	NEXT ROUTE	19
NEXT STEP	34	NEXT STEP	35	NEXT STEP	36	NEXT STEP	37	NEXT STEP	38	NEXT STEP	39	NEXT STEP	40	NEXT STEP	41

Route 19:41		Route 19:42		Route 19:43		Route 19:44		Route 19:45		Route 19:46		Route 19:47		Route 19:48	
STEP INITIATION		STEP INITIATION		STEP INITIATION		STEP INITIATION		STEP INITIATION		STEP INITIATION		STEP INITIATION		STEP INITIATION	
Go Mode	Auto	Go Mode	Auto	Go Mode	Auto	Go Mode	Auto	Go Mode	Auto	Go Mode	Auto	Go Mode	Auto	Go Mode	Auto
Radio Input	dio Input 1-	Radio Input	dio Input 1-	Radio Input	dio Input 1-	Radio Input	dio Input 1-	Radio Input	dio Input 1-	Radio Input	dio Input 1-	Radio Input	dio Input 1-	Radio Input	dio Input 1-
Hard Wire Input	N/A	Hard Wire Input	N/A	Hard Wire Input	N/A	Hard Wire Input	N/A	Hard Wire Input	N/A	Hard Wire Input	N/A	Hard Wire Input	N/A	Hard Wire Input	N/A
BIT	N/A	BIT	N/A	BIT	N/A	BIT	N/A	BIT	N/A	BIT	N/A	BIT	N/A	BIT	N/A
STEP ACTION		STEP ACTION		STEP ACTION		STEP ACTION		STEP ACTION		STEP ACTION		STEP ACTION		STEP ACTION	
Function	Forward	Function	Rotate	Function	Reverse	Function	Delay	Function	Forward	Function	Rotate	Function	Reverse	Function	Rotate
Speed	33	Speed	33	Speed	33	Speed	33	Speed	33	Speed	33	Speed	33	Speed	33
Navigation	DR	Navigation	DR	Navigation	DR	Navigation	DR	Navigation	DR	Navigation	DR	Navigation	DR	Navigation	DR
Direction	Center	Direction	Center	Direction	Center	Direction	Center	Direction	Center	Direction	Center	Direction	Center	Direction	Center
Size	164	Size	-90	Size	102	Size	5	Size	102	Size	90	Size	60	Size	-45
Loss Of Guidance	N/A	Loss Of Guidance	N/A	Loss Of Guidance	N/A	Loss Of Guidance	N/A	Loss Of Guidance	N/A	Loss Of Guidance	N/A	Loss Of Guidance	N/A	Loss Of Guidance	N/A
Obstacle Avoidance	1	Obstacle Avoidance	1	Obstacle Avoidance	1	Obstacle Avoidance	1	Obstacle Avoidance	1	Obstacle Avoidance	1	Obstacle Avoidance	1	Obstacle Avoidance	1
Output	N/A	Output	N/A	Output	N/A	Output	#7 Pin Drop	Output	N/a	Output	N/a	Output	N/a	Output	N/a
END OF STEP		END OF STEP		END OF STEP		END OF STEP		END OF STEP		END OF STEP		END OF STEP		END OF STEP	
END MODE	Distance	END MODE	Distance	END MODE	Distance	END MODE	Time	END MODE	Distance	END MODE	Distance	END MODE	Distance	END MODE	Distance
END ACTION	Merge	END ACTION	Merge	END ACTION	Merge	END ACTION	Merge	END ACTION	Merge	END ACTION	Merge	END ACTION	Merge	END ACTION	Merge
NEXT ROUTE	19	NEXT ROUTE	19	NEXT ROUTE	19	NEXT ROUTE	19	NEXT ROUTE	19	NEXT ROUTE	19	NEXT ROUTE	19	NEXT ROUTE	19
NEXT STEP	42	NEXT STEP	43	NEXT STEP	44	NEXT STEP	45	NEXT STEP	46	NEXT STEP	47	NEXT STEP	48	NEXT STEP	49

Route 19:49		Route 19:50		Route 19:51		Route 19:52		Route 19:53		Route 19:54		Route 19:55		Route 19:56	
STEP INITIATION		STEP INITIATION		STEP INITIATION		STEP INITIATION		STEP INITIATION		STEP INITIATION		STEP INITIATION		STEP INITIATION	
Go Mode	Auto	Go Mode	Auto	Go Mode	Auto	Go Mode	Auto	Go Mode	Auto	Go Mode	Auto	Go Mode	Auto	Go Mode	Auto
Radio Input	dio Input 1-	Radio Input	dio Input 1-	Radio Input	dio Input 1-	Radio Input	dio Input 1-	Radio Input	dio Input 1-	Radio Input	dio Input 1-	Radio Input	dio Input 1-	Radio Input	dio Input 1-
Hard Wire Input	N/A	Hard Wire Input	Cart Prese	Hard Wire Input		Hard Wire Input		Hard Wire Input		Hard Wire Input		Hard Wire Input		Hard Wire Input	
BIT	N/A	BIT	N/A	BIT	N/A	BIT	N/A	BIT	N/A	BIT	N/A	BIT	N/A	BIT	N/A
STEP ACTION		STEP ACTION		STEP ACTION		STEP ACTION		STEP ACTION		STEP ACTION		STEP ACTION		STEP ACTION	
Function	Reverse	Function	Forward	Function	Rotate	Function	Forward	Function	Rotate	Function	Forward	Function	Rotate	Function	Forward
Speed	33	Speed	33	Speed	33	Speed	33	Speed	33	Speed	33	Speed	33	Speed	33
Navigation	DR	Navigation	DR	Navigation	DR	Navigation	DR	Navigation	DR	Navigation	DR	Navigation	DR	Navigation	DR
Direction	Center	Direction	Center	Direction	Center	Direction	Center	Direction	Center	Direction	Center	Direction	Center	Direction	Center
Size	99	Size	99	Size	45	Size	174	Size	90	Size	1240	Size	-90	Size	2284
Loss Of Guidance	N/A	Loss Of Guidance	N/A	Loss Of Guidance	N/A	Loss Of Guidance	N/A	Loss Of Guidance	N/A	Loss Of Guidance	N/A	Loss Of Guidance	N/A	Loss Of Guidance	N/A
Obstacle Avoidance	1	Obstacle Avoidance	1	Obstacle Avoidance	1	Obstacle Avoidance	1	Obstacle Avoidance	1	Obstacle Avoidance	1	Obstacle Avoidance	1	Obstacle Avoidance	1
Output	#6 Pin Raise	Output	N/a	Output	N/a	Output	N/a	Output	N/a	Output	N/a	Output	N/a	Output	N/a
END OF STEP		END OF STEP		END OF STEP		END OF STEP		END OF STEP		END OF STEP		END OF STEP		END OF STEP	
END MODE	Distance	END MODE	Distance	END MODE	Distance	END MODE	Distance	END MODE	Distance	END MODE	Distance	END MODE	Distance	END MODE	Distance
END ACTION	Merge	END ACTION	Merge	END ACTION	Merge	END ACTION	Merge	END ACTION	Merge	END ACTION	Merge	END ACTION	Merge	END ACTION	Merge
NEXT ROUTE	19	NEXT ROUTE	19	NEXT ROUTE	19	NEXT ROUTE	19	NEXT ROUTE	19	NEXT ROUTE	19	NEXT ROUTE	19	NEXT ROUTE	19
NEXT STEP	50	NEXT STEP	51	NEXT STEP	52	NEXT STEP	53	NEXT STEP	54	NEXT STEP	55	NEXT STEP	56	NEXT STEP	57

Route 19:57		Route 19:58		Route 19:59		Route 19:60		Route 19:61		Route 19:62		Route 19:63		Route 19:64	
STEP INITIATION		STEP INITIATION		STEP INITIATION		STEP INITIATION		STEP INITIATION		STEP INITIATION		STEP INITIATION		STEP INITIATION	
Go Mode	Auto	Go Mode	Auto	Go Mode	Auto	Go Mode	Auto	Go Mode	Auto	Go Mode	Auto	Go Mode	Auto	Go Mode	Auto
Radio Input	dio Input 1-	Radio Input	dio Input 1-	Radio Input	dio Input 1-	Radio Input	dio Input 1-	Radio Input	dio Input 1-	Radio Input	dio Input 1-	Radio Input	dio Input 1-	Radio Input	dio Input 1-
Hard Wire Input		Hard Wire Input		Hard Wire Input		Hard Wire Input		Hard Wire Input		Hard Wire Input		Hard Wire Input		Hard Wire Input	
BIT	N/A	BIT	N/A	BIT	N/A	BIT	N/A	BIT	N/A	BIT	N/A	BIT	N/A	BIT	N/A
STEP ACTION		STEP ACTION		STEP ACTION		STEP ACTION		STEP ACTION		STEP ACTION		STEP ACTION		STEP ACTION	
Function	Rotate	Function	Forward	Function	Rotate	Function	Forward	Function	Rotate	Function	Reverse	Function	Dellay	Function	Forward
Speed	33	Speed	33	Speed	33	Speed	33	Speed	33	Speed	33	Speed	33	Speed	33
Navigation	DR	Navigation	DR	Navigation	DR	Navigation	DR	Navigation	DR	Navigation	DR	Navigation	DR	Navigation	DR
Direction	Center	Direction	Center	Direction	Center	Direction	Center	Direction	Center	Direction	Center	Direction	Center	Direction	Center
Size	90	Size	331	Size	90	Size	208	Size	-90	Size	62	Size	5	Size	62
Loss Of Guidance	N/A	Loss Of Guidance	N/A	Loss Of Guidance	N/A	Loss Of Guidance	N/A	Loss Of Guidance	N/A	Loss Of Guidance	N/A	Loss Of Guidance	N/A	Loss Of Guidance	N/A
Obstacle Avoidance	1	Obstacle Avoidance	1	Obstacle Avoidance	1	Obstacle Avoidance	1	Obstacle Avoidance	1	Obstacle Avoidance	1	Obstacle Avoidance	1	Obstacle Avoidance	1
Output	N/a	Output	N/a	Output	N/a	Output	N/a	Output	N/a	Output	N/a	Output	#7 Pin Drop	Output	
END OF STEP		END OF STEP		END OF STEP		END OF STEP		END OF STEP		END OF STEP		END OF STEP		END OF STEP	
END MODE	Distance	END MODE	Distance	END MODE	Distance	END MODE	Distance	END MODE	Distance	END MODE	Distance	END MODE	time	END MODE	Distance
END ACTION	Merge	END ACTION	Merge	END ACTION	Merge	END ACTION	Merge	END ACTION	Merge	END ACTION	Merge	END ACTION	Merge	END ACTION	Merge
NEXT ROUTE	19	NEXT ROUTE	19	NEXT ROUTE	19	NEXT ROUTE	19	NEXT ROUTE	19	NEXT ROUTE	19	NEXT ROUTE	19	NEXT ROUTE	19
NEXT STEP	58	NEXT STEP	59	NEXT STEP	60	NEXT STEP	61	NEXT STEP	62	NEXT STEP	63	NEXT STEP	64	NEXT STEP	65

Route 19:65		Route 19:66		Route 19:67		Route 19:68		Route 19:69		Route 19:70		Route 19:71		Route 19:72	
STEP INITIATION		STEP INITIATION		STEP INITIATION		STEP INITIATION		STEP INITIATION		STEP INITIATION		STEP INITIATION		STEP INITIATION	
Go Mode	Auto	Go Mode	Auto	Go Mode	Auto	Go Mode	Auto	Go Mode	Auto	Go Mode	Auto	Go Mode	Auto	Go Mode	Auto
Radio Input	dio Input 1-	Radio Input	dio Input 1-	Radio Input	dio Input 1-	Radio Input	dio Input 1-	Radio Input	dio Input 1-	Radio Input	dio Input 1-	Radio Input	dio Input 1-	Radio Input	dio Input 1-
Hard Wire Input		Hard Wire Input		Hard Wire Input		Hard Wire Input		Hard Wire Input		Hard Wire Input		Hard Wire Input	N/a	Hard Wire Input	N/a
BIT	N/A	BIT	N/A	BIT	N/A	BIT	N/A	BIT	N/A	BIT	N/A	BIT	N/A	BIT	N/A
STEP ACTION		STEP ACTION		STEP ACTION		STEP ACTION		STEP ACTION		STEP ACTION		STEP ACTION		STEP ACTION	
Function	Rotate	Function	Forward	Function	Rotate	Function	Forward	Function	Rotate	Function	Forward	Function	Rotate	Function	Forward
Speed	33	Speed	33	Speed	33	Speed	33	Speed	33	Speed	33	Speed	33	Speed	33
Navigation	DR	Navigation	DR	Navigation	DR	Navigation	DR	Navigation	DR	Navigation	DR	Navigation	DR	Navigation	DR
Direction	Center	Direction	Center	Direction	Center	Direction	Center	Direction	Center	Direction	Center	Direction	Center	Direction	Center
Size	-90	Size	208	Size	-90	Size	331	Size	-90	Size	2284	Size	90	Size	962
Loss Of Guidance	N/A	Loss Of Guidance	N/A	Loss Of Guidance	N/A	Loss Of Guidance	N/A	Loss Of Guidance	N/A	Loss Of Guidance	N/A	Loss Of Guidance	N/A	Loss Of Guidance	N/A
Obstacle Avoidance	1	Obstacle Avoidance	1	Obstacle Avoidance	1	Obstacle Avoidance	1	Obstacle Avoidance	1	Obstacle Avoidance	1	Obstacle Avoidance	1	Obstacle Avoidance	1
Output		Output		Output		Output		Output		Output		Output	N/a	Output	N/a
END OF STEP		END OF STEP		END OF STEP		END OF STEP		END OF STEP		END OF STEP		END OF STEP		END OF STEP	
END MODE	Distance	END MODE	Distance	END MODE	Distance	END MODE	Distance	END MODE	Distance	END MODE	Distance	END MODE	Distance	END MODE	Distance
END ACTION	Merge	END ACTION	Merge	END ACTION	Merge	END ACTION	Merge	END ACTION	Merge	END ACTION	Merge	END ACTION	Merge	END ACTION	Merge
NEXT ROUTE	19	NEXT ROUTE	19	NEXT ROUTE	19	NEXT ROUTE	19	NEXT ROUTE	19	NEXT ROUTE	19	NEXT ROUTE	19	NEXT ROUTE	19
NEXT STEP	66	NEXT STEP	67	NEXT STEP	68	NEXT STEP	69	NEXT STEP	70	NEXT STEP	71	NEXT STEP	72	NEXT STEP	73

Route 19:73		Route 19:74		Route 19:75		Route 19:76		Route 19:77		Route 19:78		Route 0: 1	
STEP INITIATION		STEP INITIATION		STEP INITIATION		STEP INITIATION		STEP INITIATION		STEP INITIATION		STEP INITIATION	
Go Mode	Auto	Go Mode	Auto	Go Mode	Auto	Go Mode	Auto	Go Mode	Auto	Go Mode	Auto	Go Mode	nput Trigge
Radio Input	dio Input 1-	Radio Input	dio Input 1-	Radio Input	dio Input 1-	Radio Input	dio Input 1-	Radio Input	dio Input 1-	Radio Input	dio Input 1-	Radio Input	dio Input 1-
Hard Wire Input	N/a	Hard Wire Input	N/a	Hard Wire Input	N/a	Hard Wire Input	N/a	Hard Wire Input	N/a	Hard Wire Input	N/a	Hard Wire Input	N/a
BIT	N/A	BIT	N/A	BIT	N/A	BIT	N/A	BIT	N/A	BIT	N/A	BIT	BIT #1-#24
STEP ACTION		STEP ACTION		STEP ACTION		STEP ACTION		STEP ACTION		STEP ACTION		STEP ACTION	
Function	Rotate	Function	Forward	Function	Rotate	Function	Forward	Function	Rotate	Function	Reverse	Function	Auto
Speed	33	Speed	33	Speed	33	Speed	33	Speed	33	Speed	33	Speed	33
Navigation	DR	Navigation	DR	Navigation	DR	Navigation	DR	Navigation	DR	Navigation	DR	Navigation	DR
Direction	Center	Direction	Center	Direction	Center	Direction	Center	Direction	Center	Direction	Center	Direction	Center
Size	-90	Size	525	Size	90	Size	417	Size	-90	Size	66	Size	66
Loss Of Guidance	N/A	Loss Of Guidance	N/A	Loss Of Guidance	N/A	Loss Of Guidance	N/A	Loss Of Guidance	N/A	Loss Of Guidance	N/A	Loss Of Guidance	N/A
Obstacle Avoidance	1	Obstacle Avoidance	1	Obstacle Avoidance	1	Obstacle Avoidance	1	Obstacle Avoidance	1	Obstacle Avoidance	1	Obstacle Avoidance	1
Output	N/a	Output	N/a	Output	N/a	Output	N/a	Output	N/a	Output	N/a	Output	N/a
END OF STEP		END OF STEP		END OF STEP		END OF STEP		END OF STEP		END OF STEP		END OF STEP	
END MODE	Distance	END MODE	Distance	END MODE	Distance	END MODE	Distance	END MODE	Distance	END MODE	Distance	END MODE	Distance
END ACTION	Merge	END ACTION	Merge	END ACTION	Merge	END ACTION	Merge	END ACTION	Merge	END ACTION	Merge	END ACTION	Merge
NEXT ROUTE	19	NEXT ROUTE	19	NEXT ROUTE	19	NEXT ROUTE	19	NEXT ROUTE	19	NEXT ROUTE	0	NEXT ROUTE	0
NEXT STEP	74	NEXT STEP	75	NEXT STEP	76	NEXT STEP	77	NEXT STEP	78	NEXT STEP	1	NEXT STEP	1

Tier 3 Route 20

Route 20:1		Route 20:2		Route 20:3		Route 20:4		Route 20:5		Route 20:6		Route 20:7		Route 20:8	
STEP INITIATION		**STEP INITIATION**		**STEP INITIATION**		**STEP INITIATION**		**STEP INITIATION**		**STEP INITIATION**		**STEP INITIATION**		**STEP INITIATION**	
Go Mode	nput Triggers	**Go Mode**	Auto	**Go Mode**	Auto	**Go Mode**	Auto	**Go Mode**	Auto	**Go Mode**	Auto	**Go Mode**	Auto	**Go Mode**	Auto
Radio Input	adio Input 1-2	**Radio Input**	dio Input 1-	**Radio Input**	dio Input 1-	**Radio Input**	dio Input 1-	**Radio Input**	dio Input 1-	**Radio Input**	dio Input 1-	**Radio Input**	dio Input 1-	**Radio Input**	dio Input 1-
Hard Wire Input	N/A	**Hard Wire Input**	N/A	**Hard Wire Input**	N/A	**Hard Wire Input**	N/A	**Hard Wire Input**	N/A	**Hard Wire Input**	N/A	**Hard Wire Input**	N/A	**Hard Wire Input**	N/A
BIT	Bit #1 off	**BIT**	N/A	**BIT**	N/A	**BIT**	N/A	**BIT**	N/A	**BIT**	N/A	**BIT**	N/A	**BIT**	N/A
Bit#12 On, #15 On	it #5 and 6 Off														
Home Position RFID	it #7 and 9 of														
	t #8 and 10 o														
STEP ACTION		**STEP ACTION**		**STEP ACTION**		**STEP ACTION**		**STEP ACTION**		**STEP ACTION**		**STEP ACTION**		**STEP ACTION**	
Function	Dispatch	**Function**	Forward	**Function**	Rotate	**Function**	Forward	**Function**	Rotate	**Function**	Forward	**Function**	Rotate	**Function**	Forward
Speed	N/A	**Speed**	33	**Speed**	33	**Speed**	33	**Speed**	33	**Speed**	33	**Speed**	33	**Speed**	33
Navigation	N/A	**Navigation**	DR	**Navigation**	DR	**Navigation**	DR	**Navigation**	DR	**Navigation**	DR	**Navigation**	DR	**Navigation**	DR
Direction	N/A	**Direction**	Center	**Direction**	Center	**Direction**	Center	**Direction**	Center	**Direction**	Center	**Direction**	Center	**Direction**	Center
Size	N/A	**Size**	66	**Size**	-90	**Size**	417	**Size**	-90	**Size**	525	**Size**	90	**Size**	962
Loss Of Guidance	N/A	**Loss Of Guidance**	N/A	**Loss Of Guidance**	N/A	**Loss Of Guidance**	N/A	**Loss Of Guidance**	N/A	**Loss Of Guidance**	N/A	**Loss Of Guidance**	N/A	**Loss Of Guidance**	N/A
Obstacle Avoidance	N/A	**Obstacle Avoidance**	1	**Obstacle Avoidance**	1	**Obstacle Avoidance**	1	**Obstacle Avoidance**	1	**Obstacle Avoidance**	1	**Obstacle Avoidance**	1	**Obstacle Avoidance**	1
Output	N/A	**Output**	N/A	**Output**	N/A	**Output**	N/A	**Output**	N/A	**Output**	N/A	**Output**	N/A	**Output**	N/A
END OF STEP		**END OF STEP**		**END OF STEP**		**END OF STEP**		**END OF STEP**		**END OF STEP**		**END OF STEP**		**END OF STEP**	
END MODE	N/A	**END MODE**	Distance	**END MODE**	Distance	**END MODE**	Distance	**END MODE**	Distance	**END MODE**	Distance	**END MODE**	Distance	**END MODE**	Distance
END ACTION	e Bit #12, #1	**END ACTION**	Merge	**END ACTION**	Merge	**END ACTION**	Merge	**END ACTION**	Merge	**END ACTION**	Merge	**END ACTION**	Merge	**END ACTION**	Merge
NEXT ROUTE	20	**NEXT ROUTE**	20	**NEXT ROUTE**	20	**NEXT ROUTE**	20	**NEXT ROUTE**	20	**NEXT ROUTE**	20	**NEXT ROUTE**	20	**NEXT ROUTE**	20
NEXT STEP	**2**	**NEXT STEP**	**3**	**NEXT STEP**	**4**	**NEXT STEP**	**5**	**NEXT STEP**	**6**	**NEXT STEP**	**7**	**NEXT STEP**	**8**	**NEXT STEP**	**9**

Route 20:9		Route 20:10		Route 20:11		Route 20:12		Route 20:13		Route 20:14		Route 20:15		Route 20:16	
STEP INITIATION		**STEP INITIATION**		**STEP INITIATION**		**STEP INITIATION**		**STEP INITIATION**		**STEP INITIATION**		**STEP INITIATION**		**STEP INITIATION**	
Go Mode	Auto	**Go Mode**	Auto	**Go Mode**	Auto	**Go Mode**	Auto	**Go Mode**	Auto	**Go Mode**	Auto	**Go Mode**	Auto	**Go Mode**	Auto
Radio Input	dio Input 1-	**Radio Input**	dio Input 1-	**Radio Input**	dio Input 1-	**Radio Input**	dio Input 1-	**Radio Input**	dio Input 1-	**Radio Input**	dio Input 1-	**Radio Input**	dio Input 1-	**Radio Input**	dio Input 1-
Hard Wire Input	N/A	**Hard Wire Input**	N/A	**Hard Wire Input**	N/A	**Hard Wire Input**	N/A	**Hard Wire Input**	N/A	**Hard Wire Input**	N/A	**Hard Wire Input**	N/A	**Hard Wire Input**	N/A
BIT	N/A	**BIT**	N/A	**BIT**	N/A	**BIT**	N/A	**BIT**	N/A	**BIT**	N/A	**BIT**	N/A	**BIT**	N/A
STEP ACTION		**STEP ACTION**		**STEP ACTION**		**STEP ACTION**		**STEP ACTION**		**STEP ACTION**		**STEP ACTION**		**STEP ACTION**	
Function	Rotate	**Function**	Forward	**Function**	Rotate	**Function**	Forward	**Function**	Rotate	**Function**	Forward	**Function**	Rotate	**Function**	Reverse
Speed	33	**Speed**	33	**Speed**	33	**Speed**	33	**Speed**	33	**Speed**	33	**Speed**	33	**Speed**	33
Navigation	DR	**Navigation**	DR	**Navigation**	DR	**Navigation**	DR	**Navigation**	DR	**Navigation**	DR	**Navigation**	DR	**Navigation**	DR
Direction	Center	**Direction**	Center	**Direction**	Center	**Direction**	Center	**Direction**	Center	**Direction**	Center	**Direction**	Center	**Direction**	Center
Size	-90	**Size**	2284	**Size**	90	**Size**	331	**Size**	90	**Size**	274	**Size**	-90	**Size**	62
Loss Of Guidance	N/A	**Loss Of Guidance**	N/A	**Loss Of Guidance**	N/A	**Loss Of Guidance**	N/A	**Loss Of Guidance**	N/A	**Loss Of Guidance**	N/A	**Loss Of Guidance**	N/A	**Loss Of Guidance**	N/A
Obstacle Avoidance	1	**Obstacle Avoidance**	1	**Obstacle Avoidance**	1	**Obstacle Avoidance**	1	**Obstacle Avoidance**	1	**Obstacle Avoidance**	1	**Obstacle Avoidance**	1	**Obstacle Avoidance**	1
Output	N/A	**Output**	N/A	**Output**	N/A	**Output**	N/A	**Output**	N/A	**Output**	N/A	**Output**	N/A	**Output**	#6 Pin Up
END OF STEP		**END OF STEP**		**END OF STEP**		**END OF STEP**		**END OF STEP**		**END OF STEP**		**END OF STEP**		**END OF STEP**	
END MODE	Distance	**END MODE**	Distance	**END MODE**	Distance	**END MODE**	Distance	**END MODE**	Distance	**END MODE**	Distance	**END MODE**	Distance	**END MODE**	Distance
END ACTION	Merge	**END ACTION**	Merge	**END ACTION**	Merge	**END ACTION**	Merge	**END ACTION**	Merge	**END ACTION**	Merge	**END ACTION**	Merge	**END ACTION**	Merge
NEXT ROUTE	20	**NEXT ROUTE**	20	**NEXT ROUTE**	20	**NEXT ROUTE**	20	**NEXT ROUTE**	20	**NEXT ROUTE**	20	**NEXT ROUTE**	20	**NEXT ROUTE**	20
NEXT STEP	**10**	**NEXT STEP**	**11**	**NEXT STEP**	**12**	**NEXT STEP**	**13**	**NEXT STEP**	**14**	**NEXT STEP**	**15**	**NEXT STEP**	**16**	**NEXT STEP**	**17**

Route 20:17		Route 20:18		Route 20:19		Route 20:20		Route 20:21		Route 20:22		Route 20:23		Route 20:24	
STEP INITIATION		**STEP INITIATION**		**STEP INITIATION**		**STEP INITIATION**		**STEP INITIATION**		**STEP INITIATION**		**STEP INITIATION**		**STEP INITIATION**	
Go Mode	Auto	**Go Mode**	Auto	**Go Mode**	Auto	**Go Mode**	Auto	**Go Mode**	Auto	**Go Mode**	Auto	**Go Mode**	Auto	**Go Mode**	Auto
Radio Input	dio Input 1-	**Radio Input**	dio Input 1-	**Radio Input**	dio Input 1-	**Radio Input**	dio Input 1-	**Radio Input**	dio Input 1-	**Radio Input**	dio Input 1-	**Radio Input**	dio Input 1-	**Radio Input**	dio Input 1-
Hard Wire Input	N/A	**Hard Wire Input**	N/A	**Hard Wire Input**	N/A	**Hard Wire Input**	N/A	**Hard Wire Input**	N/A	**Hard Wire Input**	N/A	**Hard Wire Input**	N/A	**Hard Wire Input**	N/A
BIT	N/A	**BIT**	N/A	**BIT**	N/A	**BIT**	N/A	**BIT**	N/A	**BIT**	N/A	**BIT**	N/A	**BIT**	N/A
STEP ACTION		**STEP ACTION**		**STEP ACTION**		**STEP ACTION**		**STEP ACTION**		**EP ACTION**		**STEP ACTION**		**STEP ACTION**	
Function	Forward	**Function**	Rotate	**Function**	Forward	**Function**	Rotate	**Function**	Forward	**Function**	Rotate	**Function**	Forward	**Function**	Rotate
Speed	33	**Speed**	33	**Speed**	33	**Speed**	33	**Speed**	33	**Speed**	33	**Speed**	33	**Speed**	33
Navigation	DR	**Navigation**	DR	**Navigation**	DR	**Navigation**	DR	**Navigation**	DR	**Navigation**	DR	**Navigation**	DR	**Navigation**	DR
Direction	Center	**Direction**	Center	**Direction**	Center	**Direction**	Center	**Direction**	Center	**Direction**	Center	**Direction**	Center	**Direction**	Center
Size	62	**Size**	-90	**Size**	274	**Size**	-90	**Size**	331	**Size**	-90	**Size**	2284	**Size**	90
Loss Of Guidance	N/A	**Loss Of Guidance**	N/A	**Loss Of Guidance**	N/A	**Loss Of Guidance**	N/A	**Loss Of Guidance**	N/A	**Loss Of Guidance**	N/A	**Loss Of Guidance**	N/A	**Loss Of Guidance**	N/A
Obstacle Avoidance	1	**Obstacle Avoidance**	1	**Obstacle Avoidance**	1	**Obstacle Avoidance**	1	**Obstacle Avoidance**	1	**Obstacle Avoidance**	1	**Obstacle Avoidance**	1	**Obstacle Avoidance**	1
Output	N/A	**Output**	N/A	**Output**	N/A	**Output**	N/A	**Output**	N/A	**Output**	N/A	**Output**	N/A	**Output**	N/A
END OF STEP		**END OF STEP**		**END OF STEP**		**END OF STEP**		**END OF STEP**		**ID OF STEP**		**END OF STEP**		**END OF STEP**	
END MODE	Distance	**END MODE**	Distance	**END MODE**	Distance	**END MODE**	Distance	**END MODE**	Distance	**END MODE**	Distance	**END MODE**	Distance	**END MODE**	Distance
END ACTION	Merge	**END ACTION**	Merge	**END ACTION**	Merge	**END ACTION**	Merge	**END ACTION**	Merge	**END ACTION**	Merge	**END ACTION**	Merge	**END ACTION**	Merge
NEXT ROUTE	20	**NEXT ROUTE**	20	**NEXT ROUTE**	20	**NEXT ROUTE**	20	**NEXT ROUTE**	20	**NEXT ROUTE**	20	**NEXT ROUTE**	20	**NEXT ROUTE**	20
NEXT STEP	**18**	**NEXT STEP**	**19**	**NEXT STEP**	**20**	**NEXT STEP**	**21**	**NEXT STEP**	**22**	**NEXT STEP**	**23**	**NEXT STEP**	**24**	**NEXT STEP**	**25**

Route 20:25		Route 20:26		Route 20:27		Route 20:28		Route 20:29		Route 20:30		Route 20:31		Route 20:32	
STEP INITIATION		**STEP INITIATION**		**STEP INITIATION**		**STEP INITIATION**		**STEP INITIATION**		**STEP INITIATION**		**STEP INITIATION**		**STEP INITIATION**	
Go Mode	Auto	**Go Mode**	Auto	**Go Mode**	Auto	**Go Mode**	Auto	**Go Mode**	Auto	**Go Mode**	Auto	**Go Mode**	Auto	**Go Mode**	Auto
Radio Input	dio Input 1-	**Radio Input**	dio Input 1-	**Radio Input**	dio Input 1-	**Radio Input**	dio Input 1-	**Radio Input**	dio Input 1-	**Radio Input**	dio Input 1-	**Radio Input**	dio Input 1-	**Radio Input**	dio Input 1-
Hard Wire Input	N/A	**Hard Wire Input**	N/A	**Hard Wire Input**	N/A	**Hard Wire Input**	N/A	**Hard Wire Input**	N/A	**Hard Wire Input**	N/A	**Hard Wire Input**	N/A	**Hard Wire Input**	Cart prese
BIT	N/A	**BIT**	N/A	**BIT**	N/A	**BIT**	N/A	**BIT**	N/A	**BIT**	N/A	**BIT**	N/A	**BIT**	N/A
STEP ACTION		**STEP ACTION**		**STEP ACTION**		**STEP ACTION**		**STEP ACTION**		**STEP ACTION**		**STEP ACTION**		**STEP ACTION**	
Function	Forward	**Function**	Rotate	**Function**	Reverse	**Function**	Delay	**Function**	Forward	**Function**	Rotate	**Function**	Reverse	**Function**	Forward
Speed	33	**Speed**	33	**Speed**	33	**Speed**	33	**Speed**	33	**Speed**	33	**Speed**	33	**Speed**	33
Navigation	DR	**Navigation**	DR	**Navigation**	DR	**Navigation**	DR	**Navigation**	DR	**Navigation**	DR	**Navigation**	DR	**Navigation**	DR
Direction	Center	**Direction**	Center	**Direction**	Center	**Direction**	Center	**Direction**	Center	**Direction**	Center	**Direction**	Center	**Direction**	Center
Size	1240	**Size**	90	**Size**	279	**Size**	5	**Size**	164	**Size**	-90	**Size**	102	**Size**	102
Loss Of Guidance	N/A	**Loss Of Guidance**	N/A	**Loss Of Guidance**	N/A	**Loss Of Guidance**	N/A	**Loss Of Guidance**	N/A	**Loss Of Guidance**	N/A	**Loss Of Guidance**	N/A	**Loss Of Guidance**	N/A
Obstacle Avoidance	1	**Obstacle Avoidance**	1	**Obstacle Avoidance**	1	**Obstacle Avoidance**	1	**Obstacle Avoidance**	1	**Obstacle Avoidance**	1	**Obstacle Avoidance**	1	**Obstacle Avoidance**	1
Output	N/A	**Output**	N/A	**Output**	N/A	**Output**	#7 Pin Drop	**Output**		**Output**		**Output**	#6 pin up	**Output**	N/a
END OF STEP		**END OF STEP**		**END OF STEP**		**END OF STEP**		**END OF STEP**		**END OF STEP**		**END OF STEP**		**END OF STEP**	
END MODE	Distance	**END MODE**	Distance	**END MODE**	Distance	**END MODE**	time	**END MODE**	Distance	**END MODE**	Distance	**END MODE**	Distance	**END MODE**	Distance
END ACTION	Merge	**END ACTION**	Merge	**END ACTION**	Merge	**END ACTION**	Merge	**END ACTION**	Merge	**END ACTION**	Merge	**END ACTION**	Merge	**END ACTION**	Merge
NEXT ROUTE	20	**NEXT ROUTE**	20	**NEXT ROUTE**	20	**NEXT ROUTE**	20	**NEXT ROUTE**	20	**NEXT ROUTE**	20	**NEXT ROUTE**	20	**NEXT ROUTE**	20
NEXT STEP	**26**	**NEXT STEP**	**27**	**NEXT STEP**	**28**	**NEXT STEP**	**29**	**NEXT STEP**	**30**	**NEXT STEP**	**31**	**NEXT STEP**	**32**	**NEXT STEP**	**33**

Route 20:33		Route 20:34		Route 20:35		Route 20:36		Route 20:37		Route 20:38		Route 20:39		Route 20:40	
STEP INITIATION		STEP INITIATION		STEP INITIATION		STEP INITIATION		STEP INITIATION		STEP INITIATION		STEP INITIATION		STEP INITIATION	
Go Mode	Auto	Go Mode	Auto	Go Mode	Auto	Go Mode	Auto	Go Mode	Auto	Go Mode	Auto	Go Mode	Auto	Go Mode	Auto
Radio Input	dio Input 1-	Radio Input	dio Input 1-	Radio Input	dio Input 1-	Radio Input	dio Input 1-	Radio Input	dio Input 1-	Radio Input	dio Input 1-	Radio Input	dio Input 1-	Radio Input	dio Input 1-
Hard Wire Input	N/A	Hard Wire Input	N/A	Hard Wire Input	N/A	Hard Wire Input	N/A	Hard Wire Input	N/A	Hard Wire Input	N/A	Hard Wire Input	N/A	Hard Wire Input	N/A
BIT	N/A	BIT	N/A	BIT	N/A	BIT	N/A	BIT	N/A	BIT	N/A	BIT	N/A	BIT	N/A
STEP ACTION		STEP ACTION		STEP ACTION		STEP ACTION		STEP ACTION		STEP ACTION		STEP ACTION		STEP ACTION	
Function	Rotate	Function	Reverse	Function	Rotate	Function	Reverse	Function	Delay	Function	Forward	Function	Rotate	Function	Reverse
Speed	33	Speed	33	Speed	33	Speed	33	Speed	33	Speed	33	Speed	33	Speed	33
Navigation	DR	Navigation	DR	Navigation	DR	Navigation	DR	Navigation	DR	Navigation	DR	Navigation	DR	Navigation	DR
Direction	Center	Direction	Center	Direction	Center	Direction	Center	Direction	Center	Direction	Center	Direction	Center	Direction	Center
Size	90	Size	60	Size	-45	Size	99	Size	5	Size	99	Size	45	Size	104
Loss Of Guidance	N/A	Loss Of Guidance	N/A	Loss Of Guidance	N/A	Loss Of Guidance	N/A	Loss Of Guidance	N/A	Loss Of Guidance	N/A	Loss Of Guidance	N/A	Loss Of Guidance	N/A
Obstacle Avoidance	1	Obstacle Avoidance	1	Obstacle Avoidance	1	Obstacle Avoidance	1	Obstacle Avoidance	1	Obstacle Avoidance	1	Obstacle Avoidance	1	Obstacle Avoidance	1
Output	N/a	Output	N/a	Output	N/a	Output	N/a	Output	#7 pin drop	Output	N/a	Output	N/a	Output	#7 pin raise
END OF STEP		END OF STEP		END OF STEP		END OF STEP		END OF STEP		END OF STEP		END OF STEP		END OF STEP	
END MODE	Distance	END MODE	Distance	END MODE	Distance	END MODE	Distance	END MODE	time	END MODE	Distance	END MODE	Distance	END MODE	Distance
END ACTION	Merge	END ACTION	Merge	END ACTION	Merge	END ACTION	Merge	END ACTION	Merge	END ACTION	Merge	END ACTION	Merge	END ACTION	Merge
NEXT ROUTE	20	NEXT ROUTE	20	NEXT ROUTE	20	NEXT ROUTE	20	NEXT ROUTE	20	NEXT ROUTE	20	NEXT ROUTE	20	NEXT ROUTE	20
NEXT STEP	34	NEXT STEP	35	NEXT STEP	36	NEXT STEP	37	NEXT STEP	38	NEXT STEP	39	NEXT STEP	40	NEXT STEP	41

Route 20:41		Route 20:42		Route 20:43		Route 20:44		Route 20:45		Route 20:46		Route 20:47		Route 20:48	
STEP INITIATION		STEP INITIATION		STEP INITIATION		STEP INITIATION		STEP INITIATION		STEP INITIATION		STEP INITIATION		STEP INITIATION	
Go Mode	Auto	Go Mode	Auto	Go Mode	Auto	Go Mode	Auto	Go Mode	Auto	Go Mode	Auto	Go Mode	Auto	Go Mode	Auto
Radio Input	dio Input 1-	Radio Input	dio Input 1-	Radio Input	dio Input 1-	Radio Input	dio Input 1-	Radio Input	dio Input 1-	Radio Input	dio Input 1-	Radio Input	dio Input 1-	Radio Input	dio Input 1-
Hard Wire Input	N/A	Hard Wire Input	N/A	Hard Wire Input	N/A	Hard Wire Input	N/A	Hard Wire Input	N/A	Hard Wire Input	N/A	Hard Wire Input	N/A	Hard Wire Input	N/A
BIT	N/A	BIT	N/A	BIT	N/A	BIT	N/A	BIT	N/A	BIT	N/A	BIT	N/A	BIT	N/A
STEP ACTION		STEP ACTION		STEP ACTION		STEP ACTION		STEP ACTION		STEP ACTION		STEP ACTION		STEP ACTION	
Function	Forward	Function	Rotate	Function	Reverse	Function	Delay	Function	Forward	Function	Rotate	Function	Reverse	Function	Rotate
Speed	33	Speed	33	Speed	33	Speed	33	Speed	33	Speed	33	Speed	33	Speed	33
Navigation	DR	Navigation	DR	Navigation	DR	Navigation	DR	Navigation	DR	Navigation	DR	Navigation	DR	Navigation	DR
Direction	Center	Direction	Center	Direction	Center	Direction	Center	Direction	Center	Direction	Center	Direction	Center	Direction	Center
Size	164	Size	-90	Size	102	Size	5	Size	102	Size	90	Size	60	Size	-45
Loss Of Guidance	N/A	Loss Of Guidance	N/A	Loss Of Guidance	N/A	Loss Of Guidance	N/A	Loss Of Guidance	N/A	Loss Of Guidance	N/A	Loss Of Guidance	N/A	Loss Of Guidance	N/A
Obstacle Avoidance	1	Obstacle Avoidance	1	Obstacle Avoidance	1	Obstacle Avoidance	1	Obstacle Avoidance	1	Obstacle Avoidance	1	Obstacle Avoidance	1	Obstacle Avoidance	1
Output	N/A	Output	N/A	Output	N/A	Output	#7 Pin Drop	Output	N/a	Output	N/a	Output	N/a	Output	N/a
END OF STEP		END OF STEP		END OF STEP		END OF STEP		END OF STEP		END OF STEP		END OF STEP		END OF STEP	
END MODE	Distance	END MODE	Distance	END MODE	Distance	END MODE	Time	END MODE	Distance	END MODE	Distance	END MODE	Distance	END MODE	Distance
END ACTION	Merge	END ACTION	Merge	END ACTION	Merge	END ACTION	Merge	END ACTION	Merge	END ACTION	Merge	END ACTION	Merge	END ACTION	Merge
NEXT ROUTE	20	NEXT ROUTE	20	NEXT ROUTE	20	NEXT ROUTE	20	NEXT ROUTE	20	NEXT ROUTE	20	NEXT ROUTE	20	NEXT ROUTE	20
NEXT STEP	42	NEXT STEP	43	NEXT STEP	44	NEXT STEP	45	NEXT STEP	46	NEXT STEP	47	NEXT STEP	48	NEXT STEP	49

Route 20:49		Route 20:50		Route 20:51		Route 20:52		Route 20:53		Route 20:54		Route 20:55		Route 20:56	
STEP INITIATION		STEP INITIATION		STEP INITIATION		STEP INITIATION		STEP INITIATION		STEP INITIATION		STEP INITIATION		STEP INITIATION	
Go Mode	Auto	Go Mode	Auto	Go Mode	Auto	Go Mode	Auto	Go Mode	Auto	Go Mode	Auto	Go Mode	Auto	Go Mode	Auto
Radio Input	dio Input 1-	Radio Input	dio Input 1-	Radio Input	dio Input 1-	Radio Input	dio Input 1-	Radio Input	dio Input 1-	Radio Input	dio Input 1-	Radio Input	dio Input 1-	Radio Input	dio Input 1-
Hard Wire Input	N/A	Hard Wire Input	Cart Prese	Hard Wire Input		Hard Wire Input		Hard Wire Input		Hard Wire Input		Hard Wire Input		Hard Wire Input	
BIT	N/A	BIT	N/A	BIT	N/A	BIT	N/A	BIT	N/A	BIT	N/A	BIT	N/A	BIT	N/A
STEP ACTION		STEP ACTION		STEP ACTION		STEP ACTION		STEP ACTION		STEP ACTION		STEP ACTION		STEP ACTION	
Function	Reverse	Function	Forward	Function	Rotate	Function	Forward	Function	Rotate	Function	Forward	Function	Rotate	Function	Forward
Speed	33	Speed	33	Speed	33	Speed	33	Speed	33	Speed	33	Speed	33	Speed	33
Navigation	DR	Navigation	DR	Navigation	DR	Navigation	DR	Navigation	DR	Navigation	DR	Navigation	DR	Navigation	DR
Direction	Center	Direction	Center	Direction	Center	Direction	Center	Direction	Center	Direction	Center	Direction	Center	Direction	Center
Size	99	Size	99	Size	45	Size	174	Size	90	Size	1240	Size	-90	Size	2284
Loss Of Guidance	N/A	Loss Of Guidance	N/A	Loss Of Guidance	N/A	Loss Of Guidance	N/A	Loss Of Guidance	N/A	Loss Of Guidance	N/A	Loss Of Guidance	N/A	Loss Of Guidance	N/A
Obstacle Avoidance	1	Obstacle Avoidance	1	Obstacle Avoidance	1	Obstacle Avoidance	1	Obstacle Avoidance	1	Obstacle Avoidance	1	Obstacle Avoidance	1	Obstacle Avoidance	1
Output	#6 Pin Raise	Output	N/a	Output	N/a	Output	N/a	Output	N/a	Output	N/a	Output	N/a	Output	N/a
END OF STEP		END OF STEP		END OF STEP		END OF STEP		END OF STEP		END OF STEP		END OF STEP		END OF STEP	
END MODE	Distance	END MODE	Distance	END MODE	Distance	END MODE	Distance	END MODE	Distance	END MODE	Distance	END MODE	Distance	END MODE	Distance
END ACTION	Merge	END ACTION	Merge	END ACTION	Merge	END ACTION	Merge	END ACTION	Merge	END ACTION	Merge	END ACTION	Merge	END ACTION	Merge
NEXT ROUTE	20	NEXT ROUTE	20	NEXT ROUTE	20	NEXT ROUTE	20	NEXT ROUTE	20	NEXT ROUTE	20	NEXT ROUTE	20	NEXT ROUTE	20
NEXT STEP	50	NEXT STEP	51	NEXT STEP	52	NEXT STEP	53	NEXT STEP	54	NEXT STEP	55	NEXT STEP	56	NEXT STEP	57

Route 20:57		Route 20:58		Route 20:59		Route 20:60		Route 20:61		Route 20:62		Route 20:63		Route 20:64	
STEP INITIATION		STEP INITIATION		STEP INITIATION		STEP INITIATION		STEP INITIATION		STEP INITIATION		STEP INITIATION		STEP INITIATION	
Go Mode	Auto	Go Mode	Auto	Go Mode	Auto	Go Mode	Auto	Go Mode	Auto	Go Mode	Auto	Go Mode	Auto	Go Mode	Auto
Radio Input	dio Input 1-	Radio Input	dio Input 1-	Radio Input	dio Input 1-	Radio Input	dio Input 1-	Radio Input	dio Input 1-	Radio Input	dio Input 1-	Radio Input	dio Input 1-	Radio Input	dio Input 1-
Hard Wire Input		Hard Wire Input		Hard Wire Input		Hard Wire Input		Hard Wire Input		Hard Wire Input		Hard Wire Input		Hard Wire Input	
BIT	N/A	BIT	N/A	BIT	N/A	BIT	N/A	BIT	N/A	BIT	N/A	BIT	N/A	BIT	N/A
STEP ACTION		STEP ACTION		STEP ACTION		STEP ACTION		STEP ACTION		STEP ACTION		STEP ACTION		STEP ACTION	
Function	Rotate	Function	Forward	Function	Rotate	Function	Forward	Function	Rotate	Function	Reverse	Function	Dellay	Function	Forward
Speed	33	Speed	33	Speed	33	Speed	33	Speed	33	Speed	33	Speed	33	Speed	33
Navigation	DR	Navigation	DR	Navigation	DR	Navigation	DR	Navigation	DR	Navigation	DR	Navigation	DR	Navigation	DR
Direction	Center	Direction	Center	Direction	Center	Direction	Center	Direction	Center	Direction	Center	Direction	Center	Direction	Center
Size	90	Size	331	Size	90	Size	274	Size	-90	Size	62	Size	5	Size	62
Loss Of Guidance	N/A	Loss Of Guidance	N/A	Loss Of Guidance	N/A	Loss Of Guidance	N/A	Loss Of Guidance	N/A	Loss Of Guidance	N/A	Loss Of Guidance	N/A	Loss Of Guidance	N/A
Obstacle Avoidance	1	Obstacle Avoidance	1	Obstacle Avoidance	1	Obstacle Avoidance	1	Obstacle Avoidance	1	Obstacle Avoidance	1	Obstacle Avoidance	1	Obstacle Avoidance	1
Output	N/a	Output	N/a	Output	N/a	Output	N/a	Output	N/a	Output	N/a	Output	#7 Pin Drop	Output	
END OF STEP		END OF STEP		END OF STEP		END OF STEP		END OF STEP		END OF STEP		END OF STEP		END OF STEP	
END MODE	Distance	END MODE	Distance	END MODE	Distance	END MODE	Distance	END MODE	Distance	END MODE	Distance	END MODE	time	END MODE	Distance
END ACTION	Merge	END ACTION	Merge	END ACTION	Merge	END ACTION	Merge	END ACTION	Merge	END ACTION	Merge	END ACTION	Merge	END ACTION	Merge
NEXT ROUTE	20	NEXT ROUTE	20	NEXT ROUTE	20	NEXT ROUTE	20	NEXT ROUTE	20	NEXT ROUTE	20	NEXT ROUTE	20	NEXT ROUTE	20
NEXT STEP	58	NEXT STEP	59	NEXT STEP	60	NEXT STEP	61	NEXT STEP	62	NEXT STEP	63	NEXT STEP	64	NEXT STEP	65

Route 20:65		Route 20:66		Route 20:67		Route 20:68		Route 20:69		Route 20:70		Route 20:71		Route 20:72	
STEP INITIATION		**STEP INITIATION**		**STEP INITIATION**		**STEP INITIATION**		**STEP INITIATION**		**STEP INITIATION**		**STEP INITIATION**		**STEP INITIATION**	
Go Mode	Auto	**Go Mode**	Auto	**Go Mode**	Auto	**Go Mode**	Auto	**Go Mode**	Auto	**Go Mode**	Auto	**Go Mode**	Auto	**Go Mode**	Auto
Radio Input	dio Input 1-	**Radio Input**	dio Input 1-	**Radio Input**	dio Input 1-	**Radio Input**	dio Input 1-	**Radio Input**	dio Input 1-	**Radio Input**	dio Input 1-	**Radio Input**	dio Input 1-	**Radio Input**	dio Input 1-
Hard Wire Input		**Hard Wire Input**		**Hard Wire Input**		**Hard Wire Input**		**Hard Wire Input**		**Hard Wire Input**		**Hard Wire Input**	N/a	**Hard Wire Input**	N/a
BIT	N/A	**BIT**	N/A	**BIT**	N/A	**BIT**	N/A	**BIT**	N/A	**BIT**	N/A	**BIT**	N/A	**BIT**	N/A
STEP ACTION		**STEP ACTION**		**STEP ACTION**		**STEP ACTION**		**STEP ACTION**		**STEP ACTION**		**STEP ACTION**		**STEP ACTION**	
Function	Rotate	**Function**	Forward	**Function**	Rotate	**Function**	Forward	**Function**	Rotate	**Function**	Forward	**Function**	Rotate	**Function**	Forward
Speed	33	**Speed**	33	**Speed**	33	**Speed**	33	**Speed**	33	**Speed**	33	**Speed**	33	**Speed**	33
Navigation	DR	**Navigation**	DR	**Navigation**	DR	**Navigation**	DR	**Navigation**	DR	**Navigation**	DR	**Navigation**	DR	**Navigation**	DR
Direction	Center	**Direction**	Center	**Direction**	Center	**Direction**	Center	**Direction**	Center	**Direction**	Center	**Direction**	Center	**Direction**	Center
Size	-90	**Size**	274	**Size**	-90	**Size**	331	**Size**	-90	**Size**	2284	**Size**	90	**Size**	962
Loss Of Guidance	N/A	**Loss Of Guidance**	N/A	**Loss Of Guidance**	N/A	**Loss Of Guidance**	N/A	**Loss Of Guidance**	N/A	**Loss Of Guidance**	N/A	**Loss Of Guidance**	N/A	**Loss Of Guidance**	N/A
Obstacle Avoidance	1	**Obstacle Avoidance**	1	**Obstacle Avoidance**	1	**Obstacle Avoidance**	1	**Obstacle Avoidance**	1	**Obstacle Avoidance**	1	**Obstacle Avoidance**	1	**Obstacle Avoidance**	1
Output		**Output**		**Output**		**Output**		**Output**		**Output**		**Output**	N/a	**Output**	N/a
END OF STEP		**END OF STEP**		**END OF STEP**		**END OF STEP**		**END OF STEP**		**END OF STEP**		**END OF STEP**		**END OF STEP**	
END MODE	Distance	**END MODE**	Distance	**END MODE**	Distance	**END MODE**	Distance	**END MODE**	Distance	**END MODE**	Distance	**END MODE**	Distance	**END MODE**	Distance
END ACTION	Merge	**END ACTION**	Merge	**END ACTION**	Merge	**END ACTION**	Merge	**END ACTION**	Merge	**END ACTION**	Merge	**END ACTION**	Merge	**END ACTION**	Merge
NEXT ROUTE	20	**NEXT ROUTE**	20	**NEXT ROUTE**	20	**NEXT ROUTE**	20	**NEXT ROUTE**	20	**NEXT ROUTE**	20	**NEXT ROUTE**	20	**NEXT ROUTE**	20
NEXT STEP	**66**	**NEXT STEP**	**67**	**NEXT STEP**	**68**	**NEXT STEP**	**69**	**NEXT STEP**	**70**	**NEXT STEP**	**71**	**NEXT STEP**	**72**	**NEXT STEP**	**73**

Route 20:73		Route 20:74		Route 20:75		Route 20:76		Route 20:77		Route 20:78		Route 0: 1	
STEP INITIATION		**STEP INITIATION**		**STEP INITIATION**		**STEP INITIATION**		**STEP INITIATION**		**STEP INITIATION**		**STEP INITIATION**	
Go Mode	Auto	**Go Mode**	Auto	**Go Mode**	Auto	**Go Mode**	Auto	**Go Mode**	Auto	**Go Mode**	Auto	**Go Mode**	nput Trigge
Radio Input	dio Input 1-	**Radio Input**	dio Input 1-	**Radio Input**	dio Input 1-	**Radio Input**	dio Input 1-	**Radio Input**	dio Input 1-	**Radio Input**	dio Input 1-	**Radio Input**	dio Input 1-
Hard Wire Input	N/a	**Hard Wire Input**	N/a	**Hard Wire Input**	N/a	**Hard Wire Input**	N/a	**Hard Wire Input**	N/a	**Hard Wire Input**	N/a	**Hard Wire Input**	N/a
BIT	N/A	**BIT**	N/A	**BIT**	N/A	**BIT**	N/A	**BIT**	N/A	**BIT**	N/A	**BIT**	BIT #1-#24
STEP ACTION		**STEP ACTION**		**STEP ACTION**		**STEP ACTION**		**STEP ACTION**		**STEP ACTION**		**STEP ACTION**	
Function	Rotate	**Function**	Forward	**Function**	Rotate	**Function**	Forward	**Function**	Rotate	**Function**	Reverse	**Function**	Auto
Speed	33	**Speed**	33	**Speed**	33	**Speed**	33	**Speed**	33	**Speed**	33	**Speed**	33
Navigation	DR	**Navigation**	DR	**Navigation**	DR	**Navigation**	DR	**Navigation**	DR	**Navigation**	DR	**Navigation**	DR
Direction	Center	**Direction**	Center	**Direction**	Center	**Direction**	Center	**Direction**	Center	**Direction**	Center	**Direction**	Center
Size	-90	**Size**	525	**Size**	90	**Size**	417	**Size**	-90	**Size**	66	**Size**	66
Loss Of Guidance	N/A	**Loss Of Guidance**	N/A	**Loss Of Guidance**	N/A	**Loss Of Guidance**	N/A	**Loss Of Guidance**	N/A	**Loss Of Guidance**	N/A	**Loss Of Guidance**	N/A
Obstacle Avoidance	1	**Obstacle Avoidance**	1	**Obstacle Avoidance**	1	**Obstacle Avoidance**	1	**Obstacle Avoidance**	1	**Obstacle Avoidance**	1	**Obstacle Avoidance**	1
Output	N/a	**Output**	N/a	**Output**	N/a	**Output**	N/a	**Output**	N/a	**Output**	N/a	**Output**	N/a
END OF STEP		**END OF STEP**		**END OF STEP**		**END OF STEP**		**END OF STEP**		**END OF STEP**		**END OF STEP**	
END MODE	Distance	**END MODE**	Distance	**END MODE**	Distance	**END MODE**	Distance	**END MODE**	Distance	**END MODE**	Distance	**END MODE**	Distance
END ACTION	Merge	**END ACTION**	Merge	**END ACTION**	Merge	**END ACTION**	Merge	**END ACTION**	Merge	**END ACTION**	Merge	**END ACTION**	Merge
NEXT ROUTE	20	**NEXT ROUTE**	20	**NEXT ROUTE**	20	**NEXT ROUTE**	20	**NEXT ROUTE**	20	**NEXT ROUTE**	0	**NEXT ROUTE**	0
NEXT STEP	**74**	**NEXT STEP**	**75**	**NEXT STEP**	**76**	**NEXT STEP**	**77**	**NEXT STEP**	**78**	**NEXT STEP**	1	**NEXT STEP**	1

Tier 3 Route 21

Route 21:1 STEP INITIATION		Route 21:2 STEP INITIATION		Route 21:3 STEP INITIATION		Route 21:4 STEP INITIATION		Route 21:5 STEP INITIATION		Route 21:6 STEP INITIATION		Route 21:7 STEP INITIATION		Route 21:8 STEP INITIATION	
Go Mode	nput Triggers	Go Mode	Auto	Go Mode	Auto	Go Mode	Auto	Go Mode	Auto	Go Mode	Auto	Go Mode	Auto	Go Mode	Auto
Radio Input	adio Input 1-2	Radio Input	dio Input 1-	Radio Input	dio Input 1-	Radio Input	dio Input 1-	Radio Input	dio Input 1-	Radio Input	dio Input 1-	Radio Input	dio Input 1-	Radio Input	dio Input 1-
Hard Wire Input	N/A	Hard Wire Input	N/A	Hard Wire Input	N/A	Hard Wire Input	N/A	Hard Wire Input	N/A	Hard Wire Input	N/A	Hard Wire Input	N/A	Hard Wire Input	N/A
BIT	Bit #1 off	BIT	N/A	BIT	N/A	BIT	N/A	BIT	N/A	BIT	N/A	BIT	N/A	BIT	N/A
Bit#12 On, #16 On	it #5 and 6 Off														
Home Position RFID	it #7 and 9 of														
	t #8 and 10 o														
STEP ACTION		STEP ACTION		STEP ACTION		STEP ACTION		STEP ACTION		STEP ACTION		STEP ACTION		STEP ACTION	
Function	Dispatch	Function	Forward	Function	Rotate	Function	Forward	Function	Rotate	Function	Forward	Function	Rotate	Function	Forward
Speed	N/A	Speed	33	Speed	33	Speed	33	Speed	33	Speed	33	Speed	33	Speed	33
Navigation	N/A	Navigation	DR	Navigation	DR	Navigation	DR	Navigation	DR	Navigation	DR	Navigation	DR	Navigation	DR
Direction	N/A	Direction	Center	Direction	Center	Direction	Center	Direction	Center	Direction	Center	Direction	Center	Direction	Center
Size	N/A	Size	66	Size	-90	Size	417	Size	-90	Size	525	Size	90	Size	962
Loss Of Guidance	N/A	Loss Of Guidance	N/A	Loss Of Guidance	N/A	Loss Of Guidance	N/A	Loss Of Guidance	N/A	Loss Of Guidance	N/A	Loss Of Guidance	N/A	Loss Of Guidance	N/A
Obstacle Avoidance	N/A	Obstacle Avoidance	1	Obstacle Avoidance	1	Obstacle Avoidance	1	Obstacle Avoidance	1	Obstacle Avoidance	1	Obstacle Avoidance	1	Obstacle Avoidance	1
Output	N/A	Output	N/A	Output	N/A	Output	N/A	Output	N/A	Output	N/A	Output	N/A	Output	N/A
END OF STEP		END OF STEP		END OF STEP		END OF STEP		END OF STEP		END OF STEP		END OF STEP		END OF STEP	
END MODE	N/A	END MODE	Distance	END MODE	Distance	END MODE	Distance	END MODE	Distance	END MODE	Distance	END MODE	Distance	END MODE	Distance
END ACTION	e Bit #12, #1	END ACTION	Merge	END ACTION	Merge	END ACTION	Merge	END ACTION	Merge	END ACTION	Merge	END ACTION	Merge	END ACTION	Merge
NEXT ROUTE	21	NEXT ROUTE	21	NEXT ROUTE	21	NEXT ROUTE	21	NEXT ROUTE	21	NEXT ROUTE	21	NEXT ROUTE	21	NEXT ROUTE	21
NEXT STEP	2	NEXT STEP	3	NEXT STEP	4	NEXT STEP	5	NEXT STEP	6	NEXT STEP	7	NEXT STEP	8	NEXT STEP	9

Route 21:9 STEP INITIATION		Route 21:10 STEP INITIATION		Route 21:11 STEP INITIATION		Route 21:12 STEP INITIATION		Route 21:13 STEP INITIATION		Route 21:14 STEP INITIATION		Route 21:15 STEP INITIATION		Route 21:16 STEP INITIATION	
Go Mode	Auto	Go Mode	Auto	Go Mode	Auto	Go Mode	Auto	Go Mode	Auto	Go Mode	Auto	Go Mode	Auto	Go Mode	Auto
Radio Input	dio Input 1-	Radio Input	dio Input 1-	Radio Input	dio Input 1-	Radio Input	dio Input 1-	Radio Input	dio Input 1-	Radio Input	dio Input 1-	Radio Input	dio Input 1-	Radio Input	dio Input 1-
Hard Wire Input	N/A	Hard Wire Input	N/A	Hard Wire Input	N/A	Hard Wire Input	N/A	Hard Wire Input	N/A	Hard Wire Input	N/A	Hard Wire Input	N/A	Hard Wire Input	N/A
BIT	N/A	BIT	N/A	BIT	N/A	BIT	N/A	BIT	N/A	BIT	N/A	BIT	N/A	BIT	N/A
STEP ACTION		STEP ACTION		STEP ACTION		STEP ACTION		STEP ACTION		STEP ACTION		STEP ACTION		STEP ACTION	
Function	Rotate	Function	Forward	Function	Rotate	Function	Forward	Function	Rotate	Function	Forward	Function	Rotate	Function	Reverse
Speed	33	Speed	33	Speed	33	Speed	33	Speed	33	Speed	33	Speed	33	Speed	33
Navigation	DR	Navigation	DR	Navigation	DR	Navigation	DR	Navigation	DR	Navigation	DR	Navigation	DR	Navigation	DR
Direction	Center	Direction	Center	Direction	Center	Direction	Center	Direction	Center	Direction	Center	Direction	Center	Direction	Center
Size	-90	Size	2284	Size	90	Size	331	Size	90	Size	144	Size	90	Size	62
Loss Of Guidance	N/A	Loss Of Guidance	N/A	Loss Of Guidance	N/A	Loss Of Guidance	N/A	Loss Of Guidance	N/A	Loss Of Guidance	N/A	Loss Of Guidance	N/A	Loss Of Guidance	N/A
Obstacle Avoidance	1	Obstacle Avoidance	1	Obstacle Avoidance	1	Obstacle Avoidance	1	Obstacle Avoidance	1	Obstacle Avoidance	1	Obstacle Avoidance	1	Obstacle Avoidance	1
Output	N/A	Output	N/A	Output	N/A	Output	N/A	Output	N/A	Output	N/A	Output	N/A	Output	#6 Pin Up
END OF STEP		END OF STEP		END OF STEP		END OF STEP		END OF STEP		END OF STEP		END OF STEP		END OF STEP	
END MODE	Distance	END MODE	Distance	END MODE	Distance	END MODE	Distance	END MODE	Distance	END MODE	Distance	END MODE	Distance	END MODE	Distance
END ACTION	Merge	END ACTION	Merge	END ACTION	Merge	END ACTION	Merge	END ACTION	Merge	END ACTION	Merge	END ACTION	Merge	END ACTION	Merge
NEXT ROUTE	21	NEXT ROUTE	21	NEXT ROUTE	21	NEXT ROUTE	21	NEXT ROUTE	21	NEXT ROUTE	21	NEXT ROUTE	21	NEXT ROUTE	21
NEXT STEP	10	NEXT STEP	11	NEXT STEP	12	NEXT STEP	13	NEXT STEP	14	NEXT STEP	15	NEXT STEP	16	NEXT STEP	17

Route 21:17 STEP INITIATION		Route 21:18 STEP INITIATION		Route 21:19 STEP INITIATION		Route 21:20 STEP INITIATION		Route 21:21 STEP INITIATION		Route 21:22 STEP INITIATION		Route 21:23 STEP INITIATION		Route 21:24 STEP INITIATION	
Go Mode	Auto	Go Mode	Auto	Go Mode	Auto	Go Mode	Auto	Go Mode	Auto	Go Mode	Auto	Go Mode	Auto	Go Mode	Auto
Radio Input	dio Input 1-	Radio Input	dio Input 1-	Radio Input	dio Input 1-	Radio Input	dio Input 1-	Radio Input	dio Input 1-	Radio Input	dio Input 1-	Radio Input	dio Input 1-	Radio Input	dio Input 1-
Hard Wire Input	N/A	Hard Wire Input	N/A	Hard Wire Input	N/A	Hard Wire Input	N/A	Hard Wire Input	N/A	Hard Wire Input	N/A	Hard Wire Input	N/A	Hard Wire Input	N/A
BIT	N/A	BIT	N/A	BIT	N/A	BIT	N/A	BIT	N/A	BIT	N/A	BIT	N/A	BIT	N/A
STEP ACTION		STEP ACTION		STEP ACTION		STEP ACTION		STEP ACTION		EP ACTION		STEP ACTION		STEP ACTION	
Function	Forward	Function	Rotate	Function	Forward	Function	Rotate	Function	Forward	Function	Rotate	Function	Forward	Function	Rotate
Speed	33	Speed	33	Speed	33	Speed	33	Speed	33	Speed	33	Speed	33	Speed	33
Navigation	DR	Navigation	DR	Navigation	DR	Navigation	DR	Navigation	DR	Navigation	DR	Navigation	DR	Navigation	DR
Direction	Center	Direction	Center	Direction	Center	Direction	Center	Direction	Center	Direction	Center	Direction	Center	Direction	Center
Size	62	Size	90	Size	144	Size	-90	Size	331	Size	-90	Size	2284	Size	90
Loss Of Guidance	N/A	Loss Of Guidance	N/A	Loss Of Guidance	N/A	Loss Of Guidance	N/A	Loss Of Guidance	N/A	Loss Of Guidance	N/A	Loss Of Guidance	N/A	Loss Of Guidance	N/A
Obstacle Avoidance	1	Obstacle Avoidance	1	Obstacle Avoidance	1	Obstacle Avoidance	1	Obstacle Avoidance	1	Obstacle Avoidance	1	Obstacle Avoidance	1	Obstacle Avoidance	1
Output	N/A	Output	N/A	Output	N/A	Output	N/A	Output	N/A	Output	N/A	Output	N/A	Output	N/A
END OF STEP		END OF STEP		END OF STEP		END OF STEP		END OF STEP		ID OF STEP		END OF STEP		END OF STEP	
END MODE	Distance	END MODE	Distance	END MODE	Distance	END MODE	Distance	END MODE	Distance	END MODE	Distance	END MODE	Distance	END MODE	Distance
END ACTION	Merge	END ACTION	Merge	END ACTION	Merge	END ACTION	Merge	END ACTION	Merge	END ACTION	Merge	END ACTION	Merge	END ACTION	Merge
NEXT ROUTE	21	NEXT ROUTE	21	NEXT ROUTE	21	NEXT ROUTE	21	NEXT ROUTE	21	NEXT ROUTE	21	NEXT ROUTE	21	NEXT ROUTE	21
NEXT STEP	18	NEXT STEP	19	NEXT STEP	20	NEXT STEP	21	NEXT STEP	22	NEXT STEP	23	NEXT STEP	24	NEXT STEP	25

Route 21:25 STEP INITIATION		Route 21:26 STEP INITIATION		Route 21:27 STEP INITIATION		Route 21:28 STEP INITIATION		Route 21:29 STEP INITIATION		Route 21:30 STEP INITIATION		Route 21:31 STEP INITIATION		Route 21:32 STEP INITIATION	
Go Mode	Auto	Go Mode	Auto	Go Mode	Auto	Go Mode	Auto	Go Mode	Auto	Go Mode	Auto	Go Mode	Auto	Go Mode	Auto
Radio Input	dio Input 1-	Radio Input	dio Input 1-	Radio Input	dio Input 1-	Radio Input	dio Input 1-	Radio Input	dio Input 1-	Radio Input	dio Input 1-	Radio Input	dio Input 1-	Radio Input	dio Input 1-
Hard Wire Input	N/A	Hard Wire Input	N/A	Hard Wire Input	N/A	Hard Wire Input	N/A	Hard Wire Input	N/A	Hard Wire Input	N/A	Hard Wire Input	N/A	Hard Wire Input	Cart prese
BIT	N/A	BIT	N/A	BIT	N/A	BIT	N/A	BIT	N/A	BIT	N/A	BIT	N/A	BIT	N/A
STEP ACTION		STEP ACTION		STEP ACTION		STEP ACTION		STEP ACTION		STEP ACTION		STEP ACTION		STEP ACTION	
Function	Forward	Function	Rotate	Function	Reverse	Function	Delay	Function	Forward	Function	Rotate	Function	Reverse	Function	Forward
Speed	33	Speed	33	Speed	33	Speed	33	Speed	33	Speed	33	Speed	33	Speed	33
Navigation	DR	Navigation	DR	Navigation	DR	Navigation	DR	Navigation	DR	Navigation	DR	Navigation	DR	Navigation	DR
Direction	Center	Direction	Center	Direction	Center	Direction	Center	Direction	Center	Direction	Center	Direction	Center	Direction	Center
Size	1240	Size	90	Size	279	Size	5	Size	164	Size	-90	Size	102	Size	102
Loss Of Guidance	N/A	Loss Of Guidance	N/A	Loss Of Guidance	N/A	Loss Of Guidance	N/A	Loss Of Guidance	N/A	Loss Of Guidance	N/A	Loss Of Guidance	N/A	Loss Of Guidance	N/A
Obstacle Avoidance	1	Obstacle Avoidance	1	Obstacle Avoidance	1	Obstacle Avoidance	1	Obstacle Avoidance	1	Obstacle Avoidance	1	Obstacle Avoidance	1	Obstacle Avoidance	1
Output	N/A	Output	N/A	Output	N/A	Output	#7 Pin Drop	Output		Output		Output	#6 pin up	Output	N/a
END OF STEP		END OF STEP		END OF STEP		END OF STEP		END OF STEP		END OF STEP		END OF STEP		END OF STEP	
END MODE	Distance	END MODE	Distance	END MODE	Distance	END MODE	time	END MODE	Distance	END MODE	Distance	END MODE	Distance	END MODE	Distance
END ACTION	Merge	END ACTION	Merge	END ACTION	Merge	END ACTION	Merge	END ACTION	Merge	END ACTION	Merge	END ACTION	Merge	END ACTION	Merge
NEXT ROUTE	21	NEXT ROUTE	21	NEXT ROUTE	21	NEXT ROUTE	21	NEXT ROUTE	21	NEXT ROUTE	21	NEXT ROUTE	21	NEXT ROUTE	21
NEXT STEP	26	NEXT STEP	27	NEXT STEP	28	NEXT STEP	29	NEXT STEP	30	NEXT STEP	31	NEXT STEP	32	NEXT STEP	33

Route 21:33 STEP INITIATION		Route 21:34 STEP INITIATION		Route 21:35 STEP INITIATION		Route 21:36 STEP INITIATION		Route 21:37 STEP INITIATION		Route 21:38 STEP INITIATION		Route 21:39 STEP INITIATION		Route 21:40 STEP INITIATION	
Go Mode	Auto	Go Mode	Auto	Go Mode	Auto	Go Mode	Auto	Go Mode	Auto	Go Mode	Auto	Go Mode	Auto	Go Mode	Auto
Radio Input	dio Input 1-	Radio Input	dio Input 1-	Radio Input	dio Input 1-	Radio Input	dio Input 1-	Radio Input	dio Input 1-	Radio Input	dio Input 1-	Radio Input	dio Input 1-	Radio Input	dio Input 1-
Hard Wire Input	N/A	Hard Wire Input	N/A	Hard Wire Input	N/A	Hard Wire Input	N/A	Hard Wire Input	N/A	Hard Wire Input	N/A	Hard Wire Input	N/A	Hard Wire Input	N/A
BIT	N/A	BIT	N/A	BIT	N/A	BIT	N/A	BIT	N/A	BIT	N/A	BIT	N/A	BIT	N/A
STEP ACTION		STEP ACTION		STEP ACTION		STEP ACTION		STEP ACTION		STEP ACTION		STEP ACTION		STEP ACTION	
Function	Rotate	Function	Reverse	Function	Rotate	Function	Reverse	Function	Delay	Function	Forward	Function	Rotate	Function	Reverse
Speed	33	Speed	33	Speed	33	Speed	33	Speed	33	Speed	33	Speed	33	Speed	33
Navigation	DR	Navigation	DR	Navigation	DR	Navigation	DR	Navigation	DR	Navigation	DR	Navigation	DR	Navigation	DR
Direction	Center	Direction	Center	Direction	Center	Direction	Center	Direction	Center	Direction	Center	Direction	Center	Direction	Center
Size	90	Size	60	Size	-45	Size	99	Size	5	Size	99	Size	45	Size	104
Loss Of Guidance	N/A	Loss Of Guidance	N/A	Loss Of Guidance	N/A	Loss Of Guidance	N/A	Loss Of Guidance	N/A	Loss Of Guidance	N/A	Loss Of Guidance	N/A	Loss Of Guidance	N/A
Obstacle Avoidance	1	Obstacle Avoidance	1	Obstacle Avoidance	1	Obstacle Avoidance	1	Obstacle Avoidance	1	Obstacle Avoidance	1	Obstacle Avoidance	1	Obstacle Avoidance	1
Output	N/a	Output	N/a	Output	N/a	Output	N/a	Output	#7 pin drop	Output	N/a	Output	N/a	Output	#7 pin raise
END OF STEP		END OF STEP		END OF STEP		END OF STEP		END OF STEP		END OF STEP		END OF STEP		END OF STEP	
END MODE	Distance	END MODE	Distance	END MODE	Distance	END MODE	Distance	END MODE	time	END MODE	Distance	END MODE	Distance	END MODE	Distance
END ACTION	Merge	END ACTION	Merge	END ACTION	Merge	END ACTION	Merge	END ACTION	Merge	END ACTION	Merge	END ACTION	Merge	END ACTION	Merge
NEXT ROUTE	21	NEXT ROUTE	21	NEXT ROUTE	21	NEXT ROUTE	21	NEXT ROUTE	21	NEXT ROUTE	21	NEXT ROUTE	21	NEXT ROUTE	21
NEXT STEP	34	NEXT STEP	35	NEXT STEP	36	NEXT STEP	37	NEXT STEP	38	NEXT STEP	39	NEXT STEP	40	NEXT STEP	41

Route 21:41 STEP INITIATION		Route 21:42 STEP INITIATION		Route 21:43 STEP INITIATION		Route 21:44 STEP INITIATION		Route 21:45 STEP INITIATION		Route 21:46 STEP INITIATION		Route 21:47 STEP INITIATION		Route 21:48 STEP INITIATION	
Go Mode	Auto	Go Mode	Auto	Go Mode	Auto	Go Mode	Auto	Go Mode	Auto	Go Mode	Auto	Go Mode	Auto	Go Mode	Auto
Radio Input	dio Input 1-	Radio Input	dio Input 1-	Radio Input	dio Input 1-	Radio Input	dio Input 1-	Radio Input	dio Input 1-	Radio Input	dio Input 1-	Radio Input	dio Input 1-	Radio Input	dio Input 1-
Hard Wire Input	N/A	Hard Wire Input	N/A	Hard Wire Input	N/A	Hard Wire Input	N/A	Hard Wire Input	N/A	Hard Wire Input	N/A	Hard Wire Input	N/A	Hard Wire Input	N/A
BIT	N/A	BIT	N/A	BIT	N/A	BIT	N/A	BIT	N/A	BIT	N/A	BIT	N/A	BIT	N/A
STEP ACTION		STEP ACTION		STEP ACTION		STEP ACTION		STEP ACTION		STEP ACTION		STEP ACTION		STEP ACTION	
Function	Forward	Function	Rotate	Function	Reverse	Function	Delay	Function	Forward	Function	Rotate	Function	Reverse	Function	Rotate
Speed	33	Speed	33	Speed	33	Speed	33	Speed	33	Speed	33	Speed	33	Speed	33
Navigation	DR	Navigation	DR	Navigation	DR	Navigation	DR	Navigation	DR	Navigation	DR	Navigation	DR	Navigation	DR
Direction	Center	Direction	Center	Direction	Center	Direction	Center	Direction	Center	Direction	Center	Direction	Center	Direction	Center
Size	164	Size	-90	Size	102	Size	5	Size	102	Size	90	Size	60	Size	-45
Loss Of Guidance	N/A	Loss Of Guidance	N/A	Loss Of Guidance	N/A	Loss Of Guidance	N/A	Loss Of Guidance	N/A	Loss Of Guidance	N/A	Loss Of Guidance	N/A	Loss Of Guidance	N/A
Obstacle Avoidance	1	Obstacle Avoidance	1	Obstacle Avoidance	1	Obstacle Avoidance	1	Obstacle Avoidance	1	Obstacle Avoidance	1	Obstacle Avoidance	1	Obstacle Avoidance	1
Output	N/A	Output	N/A	Output	N/A	Output	#7 Pin Drop	Output	N/a	Output	N/a	Output	N/a	Output	N/a
END OF STEP		END OF STEP		END OF STEP		END OF STEP		END OF STEP		END OF STEP		END OF STEP		END OF STEP	
END MODE	Distance	END MODE	Distance	END MODE	Distance	END MODE	Time	END MODE	Distance	END MODE	Distance	END MODE	Distance	END MODE	Distance
END ACTION	Merge	END ACTION	Merge	END ACTION	Merge	END ACTION	Merge	END ACTION	Merge	END ACTION	Merge	END ACTION	Merge	END ACTION	Merge
NEXT ROUTE	21	NEXT ROUTE	21	NEXT ROUTE	21	NEXT ROUTE	21	NEXT ROUTE	21	NEXT ROUTE	21	NEXT ROUTE	21	NEXT ROUTE	21
NEXT STEP	42	NEXT STEP	43	NEXT STEP	44	NEXT STEP	45	NEXT STEP	46	NEXT STEP	47	NEXT STEP	48	NEXT STEP	49

Route 21:49 STEP INITIATION		Route 21:50 STEP INITIATION		Route 21:51 STEP INITIATION		Route 21:52 STEP INITIATION		Route 21:53 STEP INITIATION		Route 21:54 STEP INITIATION		Route 21:55 STEP INITIATION		Route 21:56 STEP INITIATION	
Go Mode	Auto	Go Mode	Auto	Go Mode	Auto	Go Mode	Auto	Go Mode	Auto	Go Mode	Auto	Go Mode	Auto	Go Mode	Auto
Radio Input	dio Input 1-	Radio Input	dio Input 1-	Radio Input	dio Input 1-	Radio Input	dio Input 1-	Radio Input	dio Input 1-	Radio Input	dio Input 1-	Radio Input	dio Input 1-	Radio Input	dio Input 1-
Hard Wire Input	N/A	Hard Wire Input	Cart Prese	Hard Wire Input		Hard Wire Input		Hard Wire Input		Hard Wire Input		Hard Wire Input		Hard Wire Input	
BIT	N/A	BIT	N/A	BIT	N/A	BIT	N/A	BIT	N/A	BIT	N/A	BIT	N/A	BIT	N/A
STEP ACTION		STEP ACTION		STEP ACTION		STEP ACTION		STEP ACTION		STEP ACTION		STEP ACTION		STEP ACTION	
Function	Reverse	Function	Forward	Function	Rotate	Function	Forward	Function	Rotate	Function	Forward	Function	Rotate	Function	Forward
Speed	33	Speed	33	Speed	33	Speed	33	Speed	33	Speed	33	Speed	33	Speed	33
Navigation	DR	Navigation	DR	Navigation	DR	Navigation	DR	Navigation	DR	Navigation	DR	Navigation	DR	Navigation	DR
Direction	Center	Direction	Center	Direction	Center	Direction	Center	Direction	Center	Direction	Center	Direction	Center	Direction	Center
Size	99	Size	99	Size	45	Size	174	Size	90	Size	1240	Size	-90	Size	2284
Loss Of Guidance	N/A	Loss Of Guidance	N/A	Loss Of Guidance	N/A	Loss Of Guidance	N/A	Loss Of Guidance	N/A	Loss Of Guidance	N/A	Loss Of Guidance	N/A	Loss Of Guidance	N/A
Obstacle Avoidance	1	Obstacle Avoidance	1	Obstacle Avoidance	1	Obstacle Avoidance	1	Obstacle Avoidance	1	Obstacle Avoidance	1	Obstacle Avoidance	1	Obstacle Avoidance	1
Output	/6 Pin Raise	Output	N/a	Output	N/a	Output	N/a	Output	N/a	Output	N/a	Output	N/a	Output	N/a
END OF STEP		END OF STEP		END OF STEP		END OF STEP		END OF STEP		END OF STEP		END OF STEP		END OF STEP	
END MODE	Distance	END MODE	Distance	END MODE	Distance	END MODE	Distance	END MODE	Distance	END MODE	Distance	END MODE	Distance	END MODE	Distance
END ACTION	Merge	END ACTION	Merge	END ACTION	Merge	END ACTION	Merge	END ACTION	Merge	END ACTION	Merge	END ACTION	Merge	END ACTION	Merge
NEXT ROUTE	21	NEXT ROUTE	21	NEXT ROUTE	21	NEXT ROUTE	21	NEXT ROUTE	21	NEXT ROUTE	21	NEXT ROUTE	21	NEXT ROUTE	21
NEXT STEP	50	NEXT STEP	51	NEXT STEP	52	NEXT STEP	53	NEXT STEP	54	NEXT STEP	55	NEXT STEP	56	NEXT STEP	57

Route 21:57 STEP INITIATION		Route 21:58 STEP INITIATION		Route 21:59 STEP INITIATION		Route 21:60 STEP INITIATION		Route 21:61 STEP INITIATION		Route 21:62 STEP INITIATION		Route 21:63 STEP INITIATION		Route 21:64 STEP INITIATION	
Go Mode	Auto	Go Mode	Auto	Go Mode	Auto	Go Mode	Auto	Go Mode	Auto	Go Mode	Auto	Go Mode	Auto	Go Mode	Auto
Radio Input	dio Input 1-	Radio Input	dio Input 1-	Radio Input	dio Input 1-	Radio Input	dio Input 1-	Radio Input	dio Input 1-	Radio Input	dio Input 1-	Radio Input	dio Input 1-	Radio Input	dio Input 1-
Hard Wire Input		Hard Wire Input		Hard Wire Input		Hard Wire Input		Hard Wire Input		Hard Wire Input		Hard Wire Input		Hard Wire Input	
BIT	N/A	BIT	N/A	BIT	N/A	BIT	N/A	BIT	N/A	BIT	N/A	BIT	N/A	BIT	N/A
STEP ACTION		STEP ACTION		STEP ACTION		STEP ACTION		STEP ACTION		STEP ACTION		STEP ACTION		STEP ACTION	
Function	Rotate	Function	Forward	Function	Rotate	Function	Forward	Function	Rotate	Function	Reverse	Function	Dellay	Function	Forward
Speed	33	Speed	33	Speed	33	Speed	33	Speed	33	Speed	33	Speed	33	Speed	33
Navigation	DR	Navigation	DR	Navigation	DR	Navigation	DR	Navigation	DR	Navigation	DR	Navigation	DR	Navigation	DR
Direction	Center	Direction	Center	Direction	Center	Direction	Center	Direction	Center	Direction	Center	Direction	Center	Direction	Center
Size	90	Size	331	Size	90	Size	144	Size	90	Size	62	Size	5	Size	62
Loss Of Guidance	N/A	Loss Of Guidance	N/A	Loss Of Guidance	N/A	Loss Of Guidance	N/A	Loss Of Guidance	N/A	Loss Of Guidance	N/A	Loss Of Guidance	N/A	Loss Of Guidance	N/A
Obstacle Avoidance	1	Obstacle Avoidance	1	Obstacle Avoidance	1	Obstacle Avoidance	1	Obstacle Avoidance	1	Obstacle Avoidance	1	Obstacle Avoidance	1	Obstacle Avoidance	1
Output	N/a	Output	N/a	Output	N/a	Output	N/a	Output	N/a	Output	N/a	Output	#7 Pin Drop	Output	
END OF STEP		END OF STEP		END OF STEP		END OF STEP		END OF STEP		END OF STEP		END OF STEP		END OF STEP	
END MODE	Distance	END MODE	Distance	END MODE	Distance	END MODE	Distance	END MODE	Distance	END MODE	Distance	END MODE	time	END MODE	Distance
END ACTION	Merge	END ACTION	Merge	END ACTION	Merge	END ACTION	Merge	END ACTION	Merge	END ACTION	Merge	END ACTION	Merge	END ACTION	Merge
NEXT ROUTE	21	NEXT ROUTE	21	NEXT ROUTE	21	NEXT ROUTE	21	NEXT ROUTE	21	NEXT ROUTE	21	NEXT ROUTE	21	NEXT ROUTE	21
NEXT STEP	58	NEXT STEP	59	NEXT STEP	60	NEXT STEP	61	NEXT STEP	62	NEXT STEP	63	NEXT STEP	64	NEXT STEP	65

Route 21:65 STEP INITIATION		Route 21:66 STEP INITIATION		Route 21:67 STEP INITIATION		Route 21:68 STEP INITIATION		Route 21:69 STEP INITIATION		Route 21:70 STEP INITIATION		Route 21:71 STEP INITIATION		Route 21:72 STEP INITIATION	
Go Mode	Auto	**Go Mode**	Auto	**Go Mode**	Auto	**Go Mode**	Auto	**Go Mode**	Auto	**Go Mode**	Auto	**Go Mode**	Auto	**Go Mode**	Auto
Radio Input	dio Input 1-	**Radio Input**	dio Input 1-	**Radio Input**	dio Input 1-	**Radio Input**	dio Input 1-	**Radio Input**	dio Input 1-	**Radio Input**	dio Input 1-	**Radio Input**	dio Input 1-	**Radio Input**	dio Input 1-
Hard Wire Input		**Hard Wire Input**		**Hard Wire Input**		**Hard Wire Input**		**Hard Wire Input**		**Hard Wire Input**		**Hard Wire Input**	N/a	**Hard Wire Input**	N/a
BIT	N/A	**BIT**	N/A	**BIT**	N/A	**BIT**	N/A	**BIT**	N/A	**BIT**	N/A	**BIT**	N/A	**BIT**	N/A
STEP ACTION		**STEP ACTION**		**STEP ACTION**		**STEP ACTION**		**STEP ACTION**		**STEP ACTION**		**STEP ACTION**		**STEP ACTION**	
Function	Rotate	**Function**	Forward	**Function**	Rotate	**Function**	Forward	**Function**	Rotate	**Function**	Forward	**Function**	Rotate	**Function**	Forward
Speed	33	**Speed**	33	**Speed**	33	**Speed**	33	**Speed**	33	**Speed**	33	**Speed**	33	**Speed**	33
Navigation	DR	**Navigation**	DR	**Navigation**	DR	**Navigation**	DR	**Navigation**	DR	**Navigation**	DR	**Navigation**	DR	**Navigation**	DR
Direction	Center	**Direction**	Center	**Direction**	Center	**Direction**	Center	**Direction**	Center	**Direction**	Center	**Direction**	Center	**Direction**	Center
Size	90	**Size**	144	**Size**	-90	**Size**	331	**Size**	-90	**Size**	2284	**Size**	90	**Size**	962
Loss Of Guidance	N/A	**Loss Of Guidance**	N/A	**Loss Of Guidance**	N/A	**Loss Of Guidance**	N/A	**Loss Of Guidance**	N/A	**Loss Of Guidance**	N/A	**Loss Of Guidance**	N/A	**Loss Of Guidance**	N/A
Obstacle Avoidance	1	**Obstacle Avoidance**	1	**Obstacle Avoidance**	1	**Obstacle Avoidance**	1	**Obstacle Avoidance**	1	**Obstacle Avoidance**	1	**Obstacle Avoidance**	1	**Obstacle Avoidance**	1
Output		**Output**		**Output**		**Output**		**Output**		**Output**		**Output**	N/a	**Output**	N/a
END OF STEP		**END OF STEP**		**END OF STEP**		**END OF STEP**		**END OF STEP**		**END OF STEP**		**END OF STEP**		**END OF STEP**	
END MODE	Distance	**END MODE**	Distance	**END MODE**	Distance	**END MODE**	Distance	**END MODE**	Distance	**END MODE**	Distance	**END MODE**	Distance	**END MODE**	Distance
END ACTION	Merge	**END ACTION**	Merge	**END ACTION**	Merge	**END ACTION**	Merge	**END ACTION**	Merge	**END ACTION**	Merge	**END ACTION**	Merge	**END ACTION**	Merge
NEXT ROUTE	21	**NEXT ROUTE**	21	**NEXT ROUTE**	21	**NEXT ROUTE**	21	**NEXT ROUTE**	21	**NEXT ROUTE**	21	**NEXT ROUTE**	21	**NEXT ROUTE**	21
NEXT STEP	**66**	**NEXT STEP**	**67**	**NEXT STEP**	**68**	**NEXT STEP**	**69**	**NEXT STEP**	**70**	**NEXT STEP**	**71**	**NEXT STEP**	**72**	**NEXT STEP**	**73**

Route 21:73 STEP INITIATION		Route 21:74 STEP INITIATION		Route 21:75 STEP INITIATION		Route 21:76 STEP INITIATION		Route 21:77 STEP INITIATION		Route 21:78 STEP INITIATION		Route 0: 1 STEP INITIATION	
Go Mode	Auto	**Go Mode**	Auto	**Go Mode**	Auto	**Go Mode**	Auto	**Go Mode**	Auto	**Go Mode**	Auto	**Go Mode**	nput Trigge
Radio Input	dio Input 1-	**Radio Input**	dio Input 1-	**Radio Input**	dio Input 1-	**Radio Input**	dio Input 1-	**Radio Input**	dio Input 1-	**Radio Input**	dio Input 1-	**Radio Input**	dio Input 1-
Hard Wire Input	N/a	**Hard Wire Input**	N/a	**Hard Wire Input**	N/a	**Hard Wire Input**	N/a	**Hard Wire Input**	N/a	**Hard Wire Input**	N/a	**Hard Wire Input**	N/a
BIT	N/A	**BIT**	N/A	**BIT**	N/A	**BIT**	N/A	**BIT**	N/A	**BIT**	N/A	**BIT**	BIT #1-#24
STEP ACTION		**STEP ACTION**		**STEP ACTION**		**STEP ACTION**		**STEP ACTION**		**STEP ACTION**		**STEP ACTION**	
Function	Rotate	**Function**	Forward	**Function**	Rotate	**Function**	Forward	**Function**	Rotate	**Function**	Reverse	**Function**	Auto
Speed	33	**Speed**	33	**Speed**	33	**Speed**	33	**Speed**	33	**Speed**	33	**Speed**	33
Navigation	DR	**Navigation**	DR	**Navigation**	DR	**Navigation**	DR	**Navigation**	DR	**Navigation**	DR	**Navigation**	DR
Direction	Center	**Direction**	Center	**Direction**	Center	**Direction**	Center	**Direction**	Center	**Direction**	Center	**Direction**	Center
Size	-90	**Size**	525	**Size**	90	**Size**	417	**Size**	-90	**Size**	66	**Size**	66
Loss Of Guidance	N/A	**Loss Of Guidance**	N/A	**Loss Of Guidance**	N/A	**Loss Of Guidance**	N/A	**Loss Of Guidance**	N/A	**Loss Of Guidance**	N/A	**Loss Of Guidance**	N/A
Obstacle Avoidance	1	**Obstacle Avoidance**	1	**Obstacle Avoidance**	1	**Obstacle Avoidance**	1	**Obstacle Avoidance**	1	**Obstacle Avoidance**	1	**Obstacle Avoidance**	1
Output	N/a	**Output**	N/a	**Output**	N/a	**Output**	N/a	**Output**	N/a	**Output**	N/a	**Output**	N/a
END OF STEP		**END OF STEP**		**END OF STEP**		**END OF STEP**		**END OF STEP**		**END OF STEP**		**END OF STEP**	
END MODE	Distance	**END MODE**	Distance	**END MODE**	Distance	**END MODE**	Distance	**END MODE**	Distance	**END MODE**	Distance	**END MODE**	Distance
END ACTION	Merge	**END ACTION**	Merge	**END ACTION**	Merge	**END ACTION**	Merge	**END ACTION**	Merge	**END ACTION**	Merge	**END ACTION**	Merge
NEXT ROUTE	21	**NEXT ROUTE**	21	**NEXT ROUTE**	21	**NEXT ROUTE**	21	**NEXT ROUTE**	21	**NEXT ROUTE**	0	**NEXT ROUTE**	0
NEXT STEP	**74**	**NEXT STEP**	**75**	**NEXT STEP**	**76**	**NEXT STEP**	**77**	**NEXT STEP**	**78**	**NEXT STEP**	1	**NEXT STEP**	1

Tier 3 Route 22

Route 22:1		Route 22:2		Route 22:3		Route 22:4		Route 22:5		Route 22:6		Route 22:7		Route 22:8	
STEP INITIATION		**STEP INITIATION**		**STEP INITIATION**		**STEP INITIATION**		**STEP INITIATION**		**STEP INITIATION**		**STEP INITIATION**		**STEP INITIATION**	
Go Mode	nput Triggers	**Go Mode**	Auto	**Go Mode**	Auto	**Go Mode**	Auto	**Go Mode**	Auto	**Go Mode**	Auto	**Go Mode**	Auto	**Go Mode**	Auto
Radio Input	adio Input 1-2	**Radio Input**	dio Input 1-	**Radio Input**	dio Input 1-	**Radio Input**	dio Input 1-	**Radio Input**	dio Input 1-	**Radio Input**	dio Input 1-	**Radio Input**	dio Input 1-	**Radio Input**	dio Input 1-
Hard Wire Input	N/A	**Hard Wire Input**	N/A	**Hard Wire Input**	N/A	**Hard Wire Input**	N/A	**Hard Wire Input**	N/A	**Hard Wire Input**	N/A	**Hard Wire Input**	N/A	**Hard Wire Input**	N/A
BIT	Bit #1 off	**BIT**	N/A	**BIT**	N/A	**BIT**	N/A	**BIT**	N/A	**BIT**	N/A	**BIT**	N/A	**BIT**	N/A
Bit#12 On, #17 On	it #5 and 6 Off														
Home Position RFID	it #7 and 9 of														
	t #8 and 10 o														
STEP ACTION		**STEP ACTION**		**STEP ACTION**		**STEP ACTION**		**STEP ACTION**		**STEP ACTION**		**STEP ACTION**		**STEP ACTION**	
Function	Dispatch	**Function**	Forward	**Function**	Rotate	**Function**	Forward	**Function**	Rotate	**Function**	Forward	**Function**	Rotate	**Function**	Forward
Speed	N/A	**Speed**	33	**Speed**	33	**Speed**	33	**Speed**	33	**Speed**	33	**Speed**	33	**Speed**	33
Navigation	N/A	**Navigation**	DR	**Navigation**	DR	**Navigation**	DR	**Navigation**	DR	**Navigation**	DR	**Navigation**	DR	**Navigation**	DR
Direction	N/A	**Direction**	Center	**Direction**	Center	**Direction**	Center	**Direction**	Center	**Direction**	Center	**Direction**	Center	**Direction**	Center
Size	N/A	**Size**	66	**Size**	-90	**Size**	417	**Size**	-90	**Size**	525	**Size**	90	**Size**	962
Loss Of Guidance	N/A	**Loss Of Guidance**	N/A	**Loss Of Guidance**	N/A	**Loss Of Guidance**	N/A	**Loss Of Guidance**	N/A	**Loss Of Guidance**	N/A	**Loss Of Guidance**	N/A	**Loss Of Guidance**	N/A
Obstacle Avoidance	N/A	**Obstacle Avoidance**	1	**Obstacle Avoidance**	1	**Obstacle Avoidance**	1	**Obstacle Avoidance**	1	**Obstacle Avoidance**	1	**Obstacle Avoidance**	1	**Obstacle Avoidance**	1
Output	N/A	**Output**	N/A	**Output**	N/A	**Output**	N/A	**Output**	N/A	**Output**	N/A	**Output**	N/A	**Output**	N/A
END OF STEP		**END OF STEP**		**END OF STEP**		**END OF STEP**		**END OF STEP**		**END OF STEP**		**END OF STEP**		**END OF STEP**	
END MODE	N/A	**END MODE**	Distance	**END MODE**	Distance	**END MODE**	Distance	**END MODE**	Distance	**END MODE**	Distance	**END MODE**	Distance	**END MODE**	Distance
END ACTION	e Bit #12, #1	**END ACTION**	Merge	**END ACTION**	Merge	**END ACTION**	Merge	**END ACTION**	Merge	**END ACTION**	Merge	**END ACTION**	Merge	**END ACTION**	Merge
NEXT ROUTE	22	**NEXT ROUTE**	22	**NEXT ROUTE**	22	**NEXT ROUTE**	22	**NEXT ROUTE**	22	**NEXT ROUTE**	22	**NEXT ROUTE**	22	**NEXT ROUTE**	22
NEXT STEP	**2**	**NEXT STEP**	**3**	**NEXT STEP**	**4**	**NEXT STEP**	**5**	**NEXT STEP**	**6**	**NEXT STEP**	**7**	**NEXT STEP**	**8**	**NEXT STEP**	**9**

Route 22:9		Route 22:10		Route 22:11		Route 22:12		Route 22:13		Route 22:14		Route 22:15		Route 22:16	
STEP INITIATION		**STEP INITIATION**		**STEP INITIATION**		**STEP INITIATION**		**STEP INITIATION**		**STEP INITIATION**		**STEP INITIATION**		**STEP INITIATION**	
Go Mode	Auto	**Go Mode**	Auto	**Go Mode**	Auto	**Go Mode**	Auto	**Go Mode**	Auto	**Go Mode**	Auto	**Go Mode**	Auto	**Go Mode**	Auto
Radio Input	dio Input 1-	**Radio Input**	dio Input 1-	**Radio Input**	dio Input 1-	**Radio Input**	dio Input 1-	**Radio Input**	dio Input 1-	**Radio Input**	dio Input 1-	**Radio Input**	dio Input 1-	**Radio Input**	dio Input 1-
Hard Wire Input	N/A	**Hard Wire Input**	N/A	**Hard Wire Input**	N/A	**Hard Wire Input**	N/A	**Hard Wire Input**	N/A	**Hard Wire Input**	N/A	**Hard Wire Input**	N/A	**Hard Wire Input**	N/A
BIT	N/A	**BIT**	N/A	**BIT**	N/A	**BIT**	N/A	**BIT**	N/A	**BIT**	N/A	**BIT**	N/A	**BIT**	N/A
STEP ACTION		**STEP ACTION**		**STEP ACTION**		**STEP ACTION**		**STEP ACTION**		**STEP ACTION**		**STEP ACTION**		**STEP ACTION**	
Function	Rotate	**Function**	Forward	**Function**	Rotate	**Function**	Forward	**Function**	Rotate	**Function**	Forward	**Function**	Rotate	**Function**	Reverse
Speed	33	**Speed**	33	**Speed**	33	**Speed**	33	**Speed**	33	**Speed**	33	**Speed**	33	**Speed**	33
Navigation	DR	**Navigation**	DR	**Navigation**	DR	**Navigation**	DR	**Navigation**	DR	**Navigation**	DR	**Navigation**	DR	**Navigation**	DR
Direction	Center	**Direction**	Center	**Direction**	Center	**Direction**	Center	**Direction**	Center	**Direction**	Center	**Direction**	Center	**Direction**	Center
Size	-90	**Size**	2284	**Size**	90	**Size**	331	**Size**	90	**Size**	208	**Size**	90	**Size**	62
Loss Of Guidance	N/A	**Loss Of Guidance**	N/A	**Loss Of Guidance**	N/A	**Loss Of Guidance**	N/A	**Loss Of Guidance**	N/A	**Loss Of Guidance**	N/A	**Loss Of Guidance**	N/A	**Loss Of Guidance**	N/A
Obstacle Avoidance	1	**Obstacle Avoidance**	1	**Obstacle Avoidance**	1	**Obstacle Avoidance**	1	**Obstacle Avoidance**	1	**Obstacle Avoidance**	1	**Obstacle Avoidance**	1	**Obstacle Avoidance**	1
Output	N/A	**Output**	N/A	**Output**	N/A	**Output**	N/A	**Output**	N/A	**Output**	N/A	**Output**	N/A	**Output**	#6 Pin Up
END OF STEP		**END OF STEP**		**END OF STEP**		**END OF STEP**		**END OF STEP**		**END OF STEP**		**END OF STEP**		**END OF STEP**	
END MODE	Distance	**END MODE**	Distance	**END MODE**	Distance	**END MODE**	Distance	**END MODE**	Distance	**END MODE**	Distance	**END MODE**	Distance	**END MODE**	Distance
END ACTION	Merge	**END ACTION**	Merge	**END ACTION**	Merge	**END ACTION**	Merge	**END ACTION**	Merge	**END ACTION**	Merge	**END ACTION**	Merge	**END ACTION**	Merge
NEXT ROUTE	22	**NEXT ROUTE**	22	**NEXT ROUTE**	22	**NEXT ROUTE**	22	**NEXT ROUTE**	22	**NEXT ROUTE**	22	**NEXT ROUTE**	22	**NEXT ROUTE**	22
NEXT STEP	**10**	**NEXT STEP**	**11**	**NEXT STEP**	**12**	**NEXT STEP**	**13**	**NEXT STEP**	**14**	**NEXT STEP**	**15**	**NEXT STEP**	**16**	**NEXT STEP**	**17**

Route 22:17		Route 22:18		Route 22:19		Route 22:20		Route 22:21		Route 22:22		Route 22:23		Route 22:24	
STEP INITIATION		**STEP INITIATION**		**STEP INITIATION**		**STEP INITIATION**		**STEP INITIATION**		**STEP INITIATION**		**STEP INITIATION**		**STEP INITIATION**	
Go Mode	Auto	**Go Mode**	Auto	**Go Mode**	Auto	**Go Mode**	Auto	**Go Mode**	Auto	**Go Mode**	Auto	**Go Mode**	Auto	**Go Mode**	Auto
Radio Input	dio Input 1-	**Radio Input**	dio Input 1-	**Radio Input**	dio Input 1-	**Radio Input**	dio Input 1-	**Radio Input**	dio Input 1-	**Radio Input**	dio Input 1-	**Radio Input**	dio Input 1-	**Radio Input**	dio Input 1-
Hard Wire Input	N/A	**Hard Wire Input**	N/A	**Hard Wire Input**	N/A	**Hard Wire Input**	N/A	**Hard Wire Input**	N/A	**Hard Wire Input**	N/A	**Hard Wire Input**	N/A	**Hard Wire Input**	N/A
BIT	N/A	**BIT**	N/A	**BIT**	N/A	**BIT**	N/A	**BIT**	N/A	**BIT**	N/A	**BIT**	N/A	**BIT**	N/A
STEP ACTION		**STEP ACTION**		**STEP ACTION**		**STEP ACTION**		**STEP ACTION**		**EP ACTION**		**STEP ACTION**		**STEP ACTION**	
Function	Forward	**Function**	Rotate	**Function**	Forward	**Function**	Rotate	**Function**	Forward	**Function**	Rotate	**Function**	Forward	**Function**	Rotate
Speed	33	**Speed**	33	**Speed**	33	**Speed**	33	**Speed**	33	**Speed**	33	**Speed**	33	**Speed**	33
Navigation	DR	**Navigation**	DR	**Navigation**	DR	**Navigation**	DR	**Navigation**	DR	**Navigation**	DR	**Navigation**	DR	**Navigation**	DR
Direction	Center	**Direction**	Center	**Direction**	Center	**Direction**	Center	**Direction**	Center	**Direction**	Center	**Direction**	Center	**Direction**	Center
Size	62	**Size**	90	**Size**	208	**Size**	-90	**Size**	331	**Size**	-90	**Size**	2284	**Size**	90
Loss Of Guidance	N/A	**Loss Of Guidance**	N/A	**Loss Of Guidance**	N/A	**Loss Of Guidance**	N/A	**Loss Of Guidance**	N/A	**Loss Of Guidance**	N/A	**Loss Of Guidance**	N/A	**Loss Of Guidance**	N/A
Obstacle Avoidance	1	**Obstacle Avoidance**	1	**Obstacle Avoidance**	1	**Obstacle Avoidance**	1	**Obstacle Avoidance**	1	**Obstacle Avoidance**	1	**Obstacle Avoidance**	1	**Obstacle Avoidance**	1
Output	N/A	**Output**	N/A	**Output**	N/A	**Output**	N/A	**Output**	N/A	**Output**	N/A	**Output**	N/A	**Output**	N/A
END OF STEP		**END OF STEP**		**END OF STEP**		**END OF STEP**		**END OF STEP**		**ID OF STEP**		**END OF STEP**		**END OF STEP**	
END MODE	Distance	**END MODE**	Distance	**END MODE**	Distance	**END MODE**	Distance	**END MODE**	Distance	**END MODE**	Distance	**END MODE**	Distance	**END MODE**	Distance
END ACTION	Merge	**END ACTION**	Merge	**END ACTION**	Merge	**END ACTION**	Merge	**END ACTION**	Merge	**END ACTION**	Merge	**END ACTION**	Merge	**END ACTION**	Merge
NEXT ROUTE	22	**NEXT ROUTE**	22	**NEXT ROUTE**	22	**NEXT ROUTE**	22	**NEXT ROUTE**	22	**NEXT ROUTE**	22	**NEXT ROUTE**	22	**NEXT ROUTE**	22
NEXT STEP	**18**	**NEXT STEP**	**19**	**NEXT STEP**	**20**	**NEXT STEP**	**21**	**NEXT STEP**	**22**	**NEXT STEP**	**23**	**NEXT STEP**	**24**	**NEXT STEP**	**25**

Route 22:25		Route 22:26		Route 22:27		Route 22:28		Route 22:29		Route 22:30		Route 22:31		Route 22:32	
STEP INITIATION		**STEP INITIATION**		**STEP INITIATION**		**STEP INITIATION**		**STEP INITIATION**		**STEP INITIATION**		**STEP INITIATION**		**STEP INITIATION**	
Go Mode	Auto	**Go Mode**	Auto	**Go Mode**	Auto	**Go Mode**	Auto	**Go Mode**	Auto	**Go Mode**	Auto	**Go Mode**	Auto	**Go Mode**	Auto
Radio Input	dio Input 1-	**Radio Input**	dio Input 1-	**Radio Input**	dio Input 1-	**Radio Input**	dio Input 1-	**Radio Input**	dio Input 1-	**Radio Input**	dio Input 1-	**Radio Input**	dio Input 1-	**Radio Input**	dio Input 1-
Hard Wire Input	N/A	**Hard Wire Input**	N/A	**Hard Wire Input**	N/A	**Hard Wire Input**	N/A	**Hard Wire Input**	N/A	**Hard Wire Input**	N/A	**Hard Wire Input**	N/A	**Hard Wire Input**	Cart prese
BIT	N/A	**BIT**	N/A	**BIT**	N/A	**BIT**	N/A	**BIT**	N/A	**BIT**	N/A	**BIT**	N/A	**BIT**	N/A
STEP ACTION		**STEP ACTION**		**STEP ACTION**		**STEP ACTION**		**STEP ACTION**		**STEP ACTION**		**STEP ACTION**		**STEP ACTION**	
Function	Forward	**Function**	Rotate	**Function**	Reverse	**Function**	Delay	**Function**	Forward	**Function**	Rotate	**Function**	Reverse	**Function**	Forward
Speed	33	**Speed**	33	**Speed**	33	**Speed**	33	**Speed**	33	**Speed**	33	**Speed**	33	**Speed**	33
Navigation	DR	**Navigation**	DR	**Navigation**	DR	**Navigation**	DR	**Navigation**	DR	**Navigation**	DR	**Navigation**	DR	**Navigation**	DR
Direction	Center	**Direction**	Center	**Direction**	Center	**Direction**	Center	**Direction**	Center	**Direction**	Center	**Direction**	Center	**Direction**	Center
Size	1240	**Size**	90	**Size**	279	**Size**	5	**Size**	164	**Size**	-90	**Size**	102	**Size**	102
Loss Of Guidance	N/A	**Loss Of Guidance**	N/A	**Loss Of Guidance**	N/A	**Loss Of Guidance**	N/A	**Loss Of Guidance**	N/A	**Loss Of Guidance**	N/A	**Loss Of Guidance**	N/A	**Loss Of Guidance**	N/A
Obstacle Avoidance	1	**Obstacle Avoidance**	1	**Obstacle Avoidance**	1	**Obstacle Avoidance**	1	**Obstacle Avoidance**	1	**Obstacle Avoidance**	1	**Obstacle Avoidance**	1	**Obstacle Avoidance**	1
Output	N/A	**Output**	N/A	**Output**	N/A	**Output**	#7 Pin Drop	**Output**		**Output**		**Output**	#6 pin up	**Output**	N/a
END OF STEP		**END OF STEP**		**END OF STEP**		**END OF STEP**		**END OF STEP**		**END OF STEP**		**END OF STEP**		**END OF STEP**	
END MODE	Distance	**END MODE**	Distance	**END MODE**	Distance	**END MODE**	time	**END MODE**	Distance	**END MODE**	Distance	**END MODE**	Distance	**END MODE**	Distance
END ACTION	Merge	**END ACTION**	Merge	**END ACTION**	Merge	**END ACTION**	Merge	**END ACTION**	Merge	**END ACTION**	Merge	**END ACTION**	Merge	**END ACTION**	Merge
NEXT ROUTE	22	**NEXT ROUTE**	22	**NEXT ROUTE**	22	**NEXT ROUTE**	22	**NEXT ROUTE**	22	**NEXT ROUTE**	22	**NEXT ROUTE**	22	**NEXT ROUTE**	22
NEXT STEP	**26**	**NEXT STEP**	**27**	**NEXT STEP**	**28**	**NEXT STEP**	**29**	**NEXT STEP**	**30**	**NEXT STEP**	**31**	**NEXT STEP**	**32**	**NEXT STEP**	**33**

Route 22:33		Route 22:34		Route 22:35		Route 22:36		Route 22:37		Route 22:38		Route 22:39		Route 22:40	
STEP INITIATION		STEP INITIATION		STEP INITIATION		STEP INITIATION		STEP INITIATION		STEP INITIATION		STEP INITIATION		STEP INITIATION	
Go Mode	Auto	Go Mode	Auto	Go Mode	Auto	Go Mode	Auto	Go Mode	Auto	Go Mode	Auto	Go Mode	Auto	Go Mode	Auto
Radio Input	dio Input 1-	Radio Input	dio Input 1-	Radio Input	dio Input 1-	Radio Input	dio Input 1-	Radio Input	dio Input 1-	Radio Input	dio Input 1-	Radio Input	dio Input 1-	Radio Input	dio Input 1-
Hard Wire Input	N/A	Hard Wire Input	N/A	Hard Wire Input	N/A	Hard Wire Input	N/A	Hard Wire Input	N/A	Hard Wire Input	N/A	Hard Wire Input	N/A	Hard Wire Input	N/A
BIT	N/A	BIT	N/A	BIT	N/A	BIT	N/A	BIT	N/A	BIT	N/A	BIT	N/A	BIT	N/A
STEP ACTION		STEP ACTION		STEP ACTION		STEP ACTION		STEP ACTION		STEP ACTION		STEP ACTION		STEP ACTION	
Function	Rotate	Function	Reverse	Function	Rotate	Function	Reverse	Function	Delay	Function	Forward	Function	Rotate	Function	Reverse
Speed	33	Speed	33	Speed	33	Speed	33	Speed	33	Speed	33	Speed	33	Speed	33
Navigation	DR	Navigation	DR	Navigation	DR	Navigation	DR	Navigation	DR	Navigation	DR	Navigation	DR	Navigation	DR
Direction	Center	Direction	Center	Direction	Center	Direction	Center	Direction	Center	Direction	Center	Direction	Center	Direction	Center
Size	90	Size	60	Size	-45	Size	99	Size	5	Size	99	Size	45	Size	104
Loss Of Guidance	N/A	Loss Of Guidance	N/A	Loss Of Guidance	N/A	Loss Of Guidance	N/A	Loss Of Guidance	N/A	Loss Of Guidance	N/A	Loss Of Guidance	N/A	Loss Of Guidance	N/A
Obstacle Avoidance	1	Obstacle Avoidance	1	Obstacle Avoidance	1	Obstacle Avoidance	1	Obstacle Avoidance	1	Obstacle Avoidance	1	Obstacle Avoidance	1	Obstacle Avoidance	1
Output	N/a	Output	N/a	Output	N/a	Output	N/a	Output	#7 pin drop	Output	N/a	Output	N/a	Output	#7 pin raise
END OF STEP		END OF STEP		END OF STEP		END OF STEP		END OF STEP		END OF STEP		END OF STEP		END OF STEP	
END MODE	Distance	END MODE	Distance	END MODE	Distance	END MODE	Distance	END MODE	time	END MODE	Distance	END MODE	Distance	END MODE	Distance
END ACTION	Merge	END ACTION	Merge	END ACTION	Merge	END ACTION	Merge	END ACTION	Merge	END ACTION	Merge	END ACTION	Merge	END ACTION	Merge
NEXT ROUTE	22	NEXT ROUTE	22	NEXT ROUTE	22	NEXT ROUTE	22	NEXT ROUTE	22	NEXT ROUTE	22	NEXT ROUTE	22	NEXT ROUTE	22
NEXT STEP	34	NEXT STEP	35	NEXT STEP	36	NEXT STEP	37	NEXT STEP	38	NEXT STEP	39	NEXT STEP	40	NEXT STEP	41

Route 22:41		Route 22:42		Route 22:43		Route 22:44		Route 22:45		Route 22:46		Route 22:47		Route 22:48	
STEP INITIATION		STEP INITIATION		STEP INITIATION		STEP INITIATION		STEP INITIATION		STEP INITIATION		STEP INITIATION		STEP INITIATION	
Go Mode	Auto	Go Mode	Auto	Go Mode	Auto	Go Mode	Auto	Go Mode	Auto	Go Mode	Auto	Go Mode	Auto	Go Mode	Auto
Radio Input	dio Input 1-	Radio Input	dio Input 1-	Radio Input	dio Input 1-	Radio Input	dio Input 1-	Radio Input	dio Input 1-	Radio Input	dio Input 1-	Radio Input	dio Input 1-	Radio Input	dio Input 1-
Hard Wire Input	N/A	Hard Wire Input	N/A	Hard Wire Input	N/A	Hard Wire Input	N/A	Hard Wire Input	N/A	Hard Wire Input	N/A	Hard Wire Input	N/A	Hard Wire Input	N/A
BIT	N/A	BIT	N/A	BIT	N/A	BIT	N/A	BIT	N/A	BIT	N/A	BIT	N/A	BIT	N/A
STEP ACTION		STEP ACTION		STEP ACTION		STEP ACTION		STEP ACTION		STEP ACTION		STEP ACTION		STEP ACTION	
Function	Forward	Function	Rotate	Function	Reverse	Function	Delay	Function	Forward	Function	Rotate	Function	Reverse	Function	Rotate
Speed	33	Speed	33	Speed	33	Speed	33	Speed	33	Speed	33	Speed	33	Speed	33
Navigation	DR	Navigation	DR	Navigation	DR	Navigation	DR	Navigation	DR	Navigation	DR	Navigation	DR	Navigation	DR
Direction	Center	Direction	Center	Direction	Center	Direction	Center	Direction	Center	Direction	Center	Direction	Center	Direction	Center
Size	164	Size	-90	Size	102	Size	5	Size	102	Size	90	Size	60	Size	-45
Loss Of Guidance	N/A	Loss Of Guidance	N/A	Loss Of Guidance	N/A	Loss Of Guidance	N/A	Loss Of Guidance	N/A	Loss Of Guidance	N/A	Loss Of Guidance	N/A	Loss Of Guidance	N/A
Obstacle Avoidance	1	Obstacle Avoidance	1	Obstacle Avoidance	1	Obstacle Avoidance	1	Obstacle Avoidance	1	Obstacle Avoidance	1	Obstacle Avoidance	1	Obstacle Avoidance	1
Output	N/A	Output	N/A	Output	N/A	Output	#7 Pin Drop	Output	N/a	Output	N/a	Output	N/a	Output	N/a
END OF STEP		END OF STEP		END OF STEP		END OF STEP		END OF STEP		END OF STEP		END OF STEP		END OF STEP	
END MODE	Distance	END MODE	Distance	END MODE	Distance	END MODE	Time	END MODE	Distance	END MODE	Distance	END MODE	Distance	END MODE	Distance
END ACTION	Merge	END ACTION	Merge	END ACTION	Merge	END ACTION	Merge	END ACTION	Merge	END ACTION	Merge	END ACTION	Merge	END ACTION	Merge
NEXT ROUTE	22	NEXT ROUTE	22	NEXT ROUTE	22	NEXT ROUTE	22	NEXT ROUTE	22	NEXT ROUTE	22	NEXT ROUTE	22	NEXT ROUTE	22
NEXT STEP	42	NEXT STEP	43	NEXT STEP	44	NEXT STEP	45	NEXT STEP	46	NEXT STEP	47	NEXT STEP	48	NEXT STEP	49

Route 22:49		Route 22:50		Route 22:51		Route 22:52		Route 22:53		Route 22:54		Route 22:55		Route 22:56	
STEP INITIATION		STEP INITIATION		STEP INITIATION		STEP INITIATION		STEP INITIATION		STEP INITIATION		STEP INITIATION		STEP INITIATION	
Go Mode	Auto	Go Mode	Auto	Go Mode	Auto	Go Mode	Auto	Go Mode	Auto	Go Mode	Auto	Go Mode	Auto	Go Mode	Auto
Radio Input	dio Input 1-	Radio Input	dio Input 1-	Radio Input	dio Input 1-	Radio Input	dio Input 1-	Radio Input	dio Input 1-	Radio Input	dio Input 1-	Radio Input	dio Input 1-	Radio Input	dio Input 1-
Hard Wire Input	N/A	Hard Wire Input	Cart Prese	Hard Wire Input		Hard Wire Input		Hard Wire Input		Hard Wire Input		Hard Wire Input		Hard Wire Input	
BIT	N/A	BIT	N/A	BIT	N/A	BIT	N/A	BIT	N/A	BIT	N/A	BIT	N/A	BIT	N/A
STEP ACTION		STEP ACTION		STEP ACTION		STEP ACTION		STEP ACTION		STEP ACTION		STEP ACTION		STEP ACTION	
Function	Reverse	Function	Forward	Function	Rotate	Function	Forward	Function	Rotate	Function	Forward	Function	Rotate	Function	Forward
Speed	33	Speed	33	Speed	33	Speed	33	Speed	33	Speed	33	Speed	33	Speed	33
Navigation	DR	Navigation	DR	Navigation	DR	Navigation	DR	Navigation	DR	Navigation	DR	Navigation	DR	Navigation	DR
Direction	Center	Direction	Center	Direction	Center	Direction	Center	Direction	Center	Direction	Center	Direction	Center	Direction	Center
Size	99	Size	99	Size	45	Size	174	Size	90	Size	1240	Size	-90	Size	2284
Loss Of Guidance	N/A	Loss Of Guidance	N/A	Loss Of Guidance	N/A	Loss Of Guidance	N/A	Loss Of Guidance	N/A	Loss Of Guidance	N/A	Loss Of Guidance	N/A	Loss Of Guidance	N/A
Obstacle Avoidance	1	Obstacle Avoidance	1	Obstacle Avoidance	1	Obstacle Avoidance	1	Obstacle Avoidance	1	Obstacle Avoidance	1	Obstacle Avoidance	1	Obstacle Avoidance	1
Output	J6 Pin Raise	Output	N/a	Output	N/a	Output	N/a	Output	N/a	Output	N/a	Output	N/a	Output	N/a
END OF STEP		END OF STEP		END OF STEP		END OF STEP		END OF STEP		END OF STEP		END OF STEP		END OF STEP	
END MODE	Distance	END MODE	Distance	END MODE	Distance	END MODE	Distance	END MODE	Distance	END MODE	Distance	END MODE	Distance	END MODE	Distance
END ACTION	Merge	END ACTION	Merge	END ACTION	Merge	END ACTION	Merge	END ACTION	Merge	END ACTION	Merge	END ACTION	Merge	END ACTION	Merge
NEXT ROUTE	22	NEXT ROUTE	22	NEXT ROUTE	22	NEXT ROUTE	22	NEXT ROUTE	22	NEXT ROUTE	22	NEXT ROUTE	22	NEXT ROUTE	22
NEXT STEP	50	NEXT STEP	51	NEXT STEP	52	NEXT STEP	53	NEXT STEP	54	NEXT STEP	55	NEXT STEP	56	NEXT STEP	57

Route 22:57		Route 22:58		Route 22:59		Route 22:60		Route 22:61		Route 22:62		Route 22:63		Route 22:64	
STEP INITIATION		STEP INITIATION		STEP INITIATION		STEP INITIATION		STEP INITIATION		STEP INITIATION		STEP INITIATION		STEP INITIATION	
Go Mode	Auto	Go Mode	Auto	Go Mode	Auto	Go Mode	Auto	Go Mode	Auto	Go Mode	Auto	Go Mode	Auto	Go Mode	Auto
Radio Input	dio Input 1-	Radio Input	dio Input 1-	Radio Input	dio Input 1-	Radio Input	dio Input 1-	Radio Input	dio Input 1-	Radio Input	dio Input 1-	Radio Input	dio Input 1-	Radio Input	dio Input 1-
Hard Wire Input		Hard Wire Input		Hard Wire Input		Hard Wire Input		Hard Wire Input		Hard Wire Input		Hard Wire Input		Hard Wire Input	
BIT	N/A	BIT	N/A	BIT	N/A	BIT	N/A	BIT	N/A	BIT	N/A	BIT	N/A	BIT	N/A
STEP ACTION		STEP ACTION		STEP ACTION		STEP ACTION		STEP ACTION		STEP ACTION		STEP ACTION		STEP ACTION	
Function	Rotate	Function	Forward	Function	Rotate	Function	Forward	Function	Rotate	Function	Reverse	Function	Dellay	Function	Forward
Speed	33	Speed	33	Speed	33	Speed	33	Speed	33	Speed	33	Speed	33	Speed	33
Navigation	DR	Navigation	DR	Navigation	DR	Navigation	DR	Navigation	DR	Navigation	DR	Navigation	DR	Navigation	DR
Direction	Center	Direction	Center	Direction	Center	Direction	Center	Direction	Center	Direction	Center	Direction	Center	Direction	Center
Size	90	Size	331	Size	90	Size	208	Size	90	Size	62	Size	5	Size	62
Loss Of Guidance	N/A	Loss Of Guidance	N/A	Loss Of Guidance	N/A	Loss Of Guidance	N/A	Loss Of Guidance	N/A	Loss Of Guidance	N/A	Loss Of Guidance	N/A	Loss Of Guidance	N/A
Obstacle Avoidance	1	Obstacle Avoidance	1	Obstacle Avoidance	1	Obstacle Avoidance	1	Obstacle Avoidance	1	Obstacle Avoidance	1	Obstacle Avoidance	1	Obstacle Avoidance	1
Output	N/a	Output	N/a	Output	N/a	Output	N/a	Output	N/a	Output	N/a	Output	#7 Pin Drop	Output	
END OF STEP		END OF STEP		END OF STEP		END OF STEP		END OF STEP		END OF STEP		END OF STEP		END OF STEP	
END MODE	Distance	END MODE	Distance	END MODE	Distance	END MODE	Distance	END MODE	Distance	END MODE	Distance	END MODE	time	END MODE	Distance
END ACTION	Merge	END ACTION	Merge	END ACTION	Merge	END ACTION	Merge	END ACTION	Merge	END ACTION	Merge	END ACTION	Merge	END ACTION	Merge
NEXT ROUTE	22	NEXT ROUTE	22	NEXT ROUTE	22	NEXT ROUTE	22	NEXT ROUTE	22	NEXT ROUTE	22	NEXT ROUTE	22	NEXT ROUTE	22
NEXT STEP	58	NEXT STEP	59	NEXT STEP	60	NEXT STEP	61	NEXT STEP	62	NEXT STEP	63	NEXT STEP	64	NEXT STEP	65

Route 22:65		Route 22:66		Route 22:67		Route 22:68		Route 22:69		Route 22:70		Route 22:71		Route 22:72	
STEP INITIATION		STEP INITIATION		STEP INITIATION		STEP INITIATION		STEP INITIATION		STEP INITIATION		STEP INITIATION		STEP INITIATION	
Go Mode	Auto	Go Mode	Auto	Go Mode	Auto	Go Mode	Auto	Go Mode	Auto	Go Mode	Auto	Go Mode	Auto	Go Mode	Auto
Radio Input	dio Input 1-	Radio Input	dio Input 1-	Radio Input	dio Input 1-	Radio Input	dio Input 1-	Radio Input	dio Input 1-	Radio Input	dio Input 1-	Radio Input	dio Input 1-	Radio Input	dio Input 1-
Hard Wire Input		Hard Wire Input		Hard Wire Input		Hard Wire Input		Hard Wire Input		Hard Wire Input		Hard Wire Input	N/a	Hard Wire Input	N/a
BIT	N/A	BIT	N/A	BIT	N/A	BIT	N/A	BIT	N/A	BIT	N/A	BIT	N/A	BIT	N/A
STEP ACTION		STEP ACTION		STEP ACTION		STEP ACTION		STEP ACTION		STEP ACTION		STEP ACTION		STEP ACTION	
Function	Rotate	Function	Forward	Function	Rotate	Function	Forward	Function	Rotate	Function	Forward	Function	Rotate	Function	Forward
Speed	33	Speed	33	Speed	33	Speed	33	Speed	33	Speed	33	Speed	33	Speed	33
Navigation	DR	Navigation	DR	Navigation	DR	Navigation	DR	Navigation	DR	Navigation	DR	Navigation	DR	Navigation	DR
Direction	Center	Direction	Center	Direction	Center	Direction	Center	Direction	Center	Direction	Center	Direction	Center	Direction	Center
Size	90	Size	208	Size	-90	Size	331	Size	-90	Size	2284	Size	90	Size	962
Loss Of Guidance	N/A	Loss Of Guidance	N/A	Loss Of Guidance	N/A	Loss Of Guidance	N/A	Loss Of Guidance	N/A	Loss Of Guidance	N/A	Loss Of Guidance	N/A	Loss Of Guidance	N/A
Obstacle Avoidance	1	Obstacle Avoidance	1	Obstacle Avoidance	1	Obstacle Avoidance	1	Obstacle Avoidance	1	Obstacle Avoidance	1	Obstacle Avoidance	1	Obstacle Avoidance	1
Output		Output		Output		Output		Output		Output		Output	N/a	Output	N/a
END OF STEP		END OF STEP		END OF STEP		END OF STEP		END OF STEP		END OF STEP		END OF STEP		END OF STEP	
END MODE	Distance	END MODE	Distance	END MODE	Distance	END MODE	Distance	END MODE	Distance	END MODE	Distance	END MODE	Distance	END MODE	Distance
END ACTION	Merge	END ACTION	Merge	END ACTION	Merge	END ACTION	Merge	END ACTION	Merge	END ACTION	Merge	END ACTION	Merge	END ACTION	Merge
NEXT ROUTE	22	NEXT ROUTE	22	NEXT ROUTE	22	NEXT ROUTE	22	NEXT ROUTE	22	NEXT ROUTE	22	NEXT ROUTE	22	NEXT ROUTE	22
NEXT STEP	66	NEXT STEP	67	NEXT STEP	68	NEXT STEP	69	NEXT STEP	70	NEXT STEP	71	NEXT STEP	72	NEXT STEP	73

Route 22:73		Route 22:74		Route 22:75		Route 22:76		Route 22:77		Route 22:78		Route 0: 1	
STEP INITIATION		STEP INITIATION		STEP INITIATION		STEP INITIATION		STEP INITIATION		STEP INITIATION		STEP INITIATION	
Go Mode	Auto	Go Mode	Auto	Go Mode	Auto	Go Mode	Auto	Go Mode	Auto	Go Mode	Auto	Go Mode	nput Trigge
Radio Input	dio Input 1-	Radio Input	dio Input 1-	Radio Input	dio Input 1-	Radio Input	dio Input 1-	Radio Input	dio Input 1-	Radio Input	dio Input 1-	Radio Input	dio Input 1-
Hard Wire Input	N/a	Hard Wire Input	N/a	Hard Wire Input	N/a	Hard Wire Input	N/a	Hard Wire Input	N/a	Hard Wire Input	N/a	Hard Wire Input	N/a
BIT	N/A	BIT	N/A	BIT	N/A	BIT	N/A	BIT	N/A	BIT	N/A	BIT	BIT #1-#24
STEP ACTION		STEP ACTION		STEP ACTION		STEP ACTION		STEP ACTION		STEP ACTION		STEP ACTION	
Function	Rotate	Function	Forward	Function	Rotate	Function	Forward	Function	Rotate	Function	Reverse	Function	Auto
Speed	33	Speed	33	Speed	33	Speed	33	Speed	33	Speed	33	Speed	33
Navigation	DR	Navigation	DR	Navigation	DR	Navigation	DR	Navigation	DR	Navigation	DR	Navigation	DR
Direction	Center	Direction	Center	Direction	Center	Direction	Center	Direction	Center	Direction	Center	Direction	Center
Size	-90	Size	525	Size	90	Size	417	Size	-90	Size	66	Size	66
Loss Of Guidance	N/A	Loss Of Guidance	N/A	Loss Of Guidance	N/A	Loss Of Guidance	N/A	Loss Of Guidance	N/A	Loss Of Guidance	N/A	Loss Of Guidance	N/A
Obstacle Avoidance	1	Obstacle Avoidance	1	Obstacle Avoidance	1	Obstacle Avoidance	1	Obstacle Avoidance	1	Obstacle Avoidance	1	Obstacle Avoidance	1
Output	N/a	Output	N/a	Output	N/a	Output	N/a	Output	N/a	Output	N/a	Output	N/a
END OF STEP		END OF STEP		END OF STEP		END OF STEP		END OF STEP		END OF STEP		END OF STEP	
END MODE	Distance	END MODE	Distance	END MODE	Distance	END MODE	Distance	END MODE	Distance	END MODE	Distance	END MODE	Distance
END ACTION	Merge	END ACTION	Merge	END ACTION	Merge	END ACTION	Merge	END ACTION	Merge	END ACTION	Merge	END ACTION	Merge
NEXT ROUTE	22	NEXT ROUTE	22	NEXT ROUTE	22	NEXT ROUTE	22	NEXT ROUTE	22	NEXT ROUTE	0	NEXT ROUTE	0
NEXT STEP	74	NEXT STEP	75	NEXT STEP	76	NEXT STEP	77	NEXT STEP	78	NEXT STEP	1	NEXT STEP	1

Tier 3 Route 23

Route 23:1		Route 23:2		Route 23:3		Route 23:4		Route 23:5		Route 23:6		Route 23:7		Route 23:8	
STEP INITIATION		**STEP INITIATION**		**STEP INITIATION**		**STEP INITIATION**		**STEP INITIATION**		**STEP INITIATION**		**STEP INITIATION**		**STEP INITIATION**	
Go Mode	nput Triggers	**Go Mode**	Auto	**Go Mode**	Auto	**Go Mode**	Auto	**Go Mode**	Auto	**Go Mode**	Auto	**Go Mode**	Auto	**Go Mode**	Auto
Radio Input	adio Input 1-2	**Radio Input**	dio Input 1-	**Radio Input**	dio Input 1-	**Radio Input**	dio Input 1-	**Radio Input**	dio Input 1-	**Radio Input**	dio Input 1-	**Radio Input**	dio Input 1-	**Radio Input**	dio Input 1-
Hard Wire Input	N/A	**Hard Wire Input**	N/A	**Hard Wire Input**	N/A	**Hard Wire Input**	N/A	**Hard Wire Input**	N/A	**Hard Wire Input**	N/A	**Hard Wire Input**	N/A	**Hard Wire Input**	N/A
BIT	Bit #1 off	**BIT**	N/A	**BIT**	N/A	**BIT**	N/A	**BIT**	N/A	**BIT**	N/A	**BIT**	N/A	**BIT**	N/A
Bit#12 On, #18 On	it #5 and 6 Off														
Home Position RFID	it #7 and 9 of														
	t #8 and 10 o														
STEP ACTION		**STEP ACTION**		**STEP ACTION**		**STEP ACTION**		**STEP ACTION**		**STEP ACTION**		**STEP ACTION**		**STEP ACTION**	
Function	Dispatch	**Function**	Forward	**Function**	Rotate	**Function**	Forward	**Function**	Rotate	**Function**	Forward	**Function**	Rotate	**Function**	Forward
Speed	N/A	**Speed**	33	**Speed**	33	**Speed**	33	**Speed**	33	**Speed**	33	**Speed**	33	**Speed**	33
Navigation	N/A	**Navigation**	DR	**Navigation**	DR	**Navigation**	DR	**Navigation**	DR	**Navigation**	DR	**Navigation**	DR	**Navigation**	DR
Direction	N/A	**Direction**	Center	**Direction**	Center	**Direction**	Center	**Direction**	Center	**Direction**	Center	**Direction**	Center	**Direction**	Center
Size	N/A	**Size**	66	**Size**	-90	**Size**	417	**Size**	-90	**Size**	525	**Size**	90	**Size**	962
Loss Of Guidance	N/A	**Loss Of Guidance**	N/A	**Loss Of Guidance**	N/A	**Loss Of Guidance**	N/A	**Loss Of Guidance**	N/A	**Loss Of Guidance**	N/A	**Loss Of Guidance**	N/A	**Loss Of Guidance**	N/A
Obstacle Avoidance	N/A	**Obstacle Avoidance**	1	**Obstacle Avoidance**	1	**Obstacle Avoidance**	1	**Obstacle Avoidance**	1	**Obstacle Avoidance**	1	**Obstacle Avoidance**	1	**Obstacle Avoidance**	1
Output	N/A	**Output**	N/A	**Output**	N/A	**Output**	N/A	**Output**	N/A	**Output**	N/A	**Output**	N/A	**Output**	N/A
END OF STEP		**END OF STEP**		**END OF STEP**		**END OF STEP**		**END OF STEP**		**END OF STEP**		**END OF STEP**		**END OF STEP**	
END MODE	N/A	**END MODE**	Distance	**END MODE**	Distance	**END MODE**	Distance	**END MODE**	Distance	**END MODE**	Distance	**END MODE**	Distance	**END MODE**	Distance
END ACTION	e Bit #12, #1	**END ACTION**	Merge	**END ACTION**	Merge	**END ACTION**	Merge	**END ACTION**	Merge	**END ACTION**	Merge	**END ACTION**	Merge	**END ACTION**	Merge
NEXT ROUTE	23	**NEXT ROUTE**	23	**NEXT ROUTE**	23	**NEXT ROUTE**	23	**NEXT ROUTE**	23	**NEXT ROUTE**	23	**NEXT ROUTE**	23	**NEXT ROUTE**	23
NEXT STEP	**2**	**NEXT STEP**	**3**	**NEXT STEP**	**4**	**NEXT STEP**	**5**	**NEXT STEP**	**6**	**NEXT STEP**	**7**	**NEXT STEP**	**8**	**NEXT STEP**	**9**

Route 23:9		Route 23:10		Route 23:11		Route 23:12		Route 23:13		Route 23:14		Route 23:15		Route 23:16	
STEP INITIATION		**STEP INITIATION**		**STEP INITIATION**		**STEP INITIATION**		**STEP INITIATION**		**STEP INITIATION**		**STEP INITIATION**		**STEP INITIATION**	
Go Mode	Auto	**Go Mode**	Auto	**Go Mode**	Auto	**Go Mode**	Auto	**Go Mode**	Auto	**Go Mode**	Auto	**Go Mode**	Auto	**Go Mode**	Auto
Radio Input	dio Input 1-	**Radio Input**	dio Input 1-	**Radio Input**	dio Input 1-	**Radio Input**	dio Input 1-	**Radio Input**	dio Input 1-	**Radio Input**	dio Input 1-	**Radio Input**	dio Input 1-	**Radio Input**	dio Input 1-
Hard Wire Input	N/A	**Hard Wire Input**	N/A	**Hard Wire Input**	N/A	**Hard Wire Input**	N/A	**Hard Wire Input**	N/A	**Hard Wire Input**	N/A	**Hard Wire Input**	N/A	**Hard Wire Input**	N/A
BIT	N/A	**BIT**	N/A	**BIT**	N/A	**BIT**	N/A	**BIT**	N/A	**BIT**	N/A	**BIT**	N/A	**BIT**	N/A
STEP ACTION		**STEP ACTION**		**STEP ACTION**		**STEP ACTION**		**STEP ACTION**		**STEP ACTION**		**STEP ACTION**		**STEP ACTION**	
Function	Rotate	**Function**	Forward	**Function**	Rotate	**Function**	Forward	**Function**	Rotate	**Function**	Forward	**Function**	Rotate	**Function**	Reverse
Speed	33	**Speed**	33	**Speed**	33	**Speed**	33	**Speed**	33	**Speed**	33	**Speed**	33	**Speed**	33
Navigation	DR	**Navigation**	DR	**Navigation**	DR	**Navigation**	DR	**Navigation**	DR	**Navigation**	DR	**Navigation**	DR	**Navigation**	DR
Direction	Center	**Direction**	Center	**Direction**	Center	**Direction**	Center	**Direction**	Center	**Direction**	Center	**Direction**	Center	**Direction**	Center
Size	-90	**Size**	2284	**Size**	90	**Size**	331	**Size**	90	**Size**	274	**Size**	90	**Size**	62
Loss Of Guidance	N/A	**Loss Of Guidance**	N/A	**Loss Of Guidance**	N/A	**Loss Of Guidance**	N/A	**Loss Of Guidance**	N/A	**Loss Of Guidance**	N/A	**Loss Of Guidance**	N/A	**Loss Of Guidance**	N/A
Obstacle Avoidance	1	**Obstacle Avoidance**	1	**Obstacle Avoidance**	1	**Obstacle Avoidance**	1	**Obstacle Avoidance**	1	**Obstacle Avoidance**	1	**Obstacle Avoidance**	1	**Obstacle Avoidance**	1
Output	N/A	**Output**	N/A	**Output**	N/A	**Output**	N/A	**Output**	N/A	**Output**	N/A	**Output**	N/A	**Output**	#6 Pin Up
END OF STEP		**END OF STEP**		**END OF STEP**		**END OF STEP**		**END OF STEP**		**END OF STEP**		**END OF STEP**		**END OF STEP**	
END MODE	Distance	**END MODE**	Distance	**END MODE**	Distance	**END MODE**	Distance	**END MODE**	Distance	**END MODE**	Distance	**END MODE**	Distance	**END MODE**	Distance
END ACTION	Merge	**END ACTION**	Merge	**END ACTION**	Merge	**END ACTION**	Merge	**END ACTION**	Merge	**END ACTION**	Merge	**END ACTION**	Merge	**END ACTION**	Merge
NEXT ROUTE	23	**NEXT ROUTE**	23	**NEXT ROUTE**	23	**NEXT ROUTE**	23	**NEXT ROUTE**	23	**NEXT ROUTE**	23	**NEXT ROUTE**	23	**NEXT ROUTE**	23
NEXT STEP	**10**	**NEXT STEP**	**11**	**NEXT STEP**	**12**	**NEXT STEP**	**13**	**NEXT STEP**	**14**	**NEXT STEP**	**15**	**NEXT STEP**	**16**	**NEXT STEP**	**17**

Route 23:17		Route 23:18		Route 23:19		Route 23:20		Route 23:21		Route 23:22		Route 23:23		Route 23:24	
STEP INITIATION		**STEP INITIATION**		**STEP INITIATION**		**STEP INITIATION**		**STEP INITIATION**		**STEP INITIATION**		**STEP INITIATION**		**STEP INITIATION**	
Go Mode	Auto	**Go Mode**	Auto	**Go Mode**	Auto	**Go Mode**	Auto	**Go Mode**	Auto	**Go Mode**	Auto	**Go Mode**	Auto	**Go Mode**	Auto
Radio Input	dio Input 1-	**Radio Input**	dio Input 1-	**Radio Input**	dio Input 1-	**Radio Input**	dio Input 1-	**Radio Input**	dio Input 1-	**Radio Input**	dio Input 1-	**Radio Input**	dio Input 1-	**Radio Input**	dio Input 1-
Hard Wire Input	N/A	**Hard Wire Input**	N/A	**Hard Wire Input**	N/A	**Hard Wire Input**	N/A	**Hard Wire Input**	N/A	**Hard Wire Input**	N/A	**Hard Wire Input**	N/A	**Hard Wire Input**	N/A
BIT	N/A	**BIT**	N/A	**BIT**	N/A	**BIT**	N/A	**BIT**	N/A	**BIT**	N/A	**BIT**	N/A	**BIT**	N/A
STEP ACTION		**STEP ACTION**		**STEP ACTION**		**STEP ACTION**		**STEP ACTION**		**EP ACTION**		**STEP ACTION**		**STEP ACTION**	
Function	Forward	**Function**	Rotate	**Function**	Forward	**Function**	Rotate	**Function**	Forward	**Function**	Rotate	**Function**	Forward	**Function**	Rotate
Speed	33	**Speed**	33	**Speed**	33	**Speed**	33	**Speed**	33	**Speed**	33	**Speed**	33	**Speed**	33
Navigation	DR	**Navigation**	DR	**Navigation**	DR	**Navigation**	DR	**Navigation**	DR	**Navigation**	DR	**Navigation**	DR	**Navigation**	DR
Direction	Center	**Direction**	Center	**Direction**	Center	**Direction**	Center	**Direction**	Center	**Direction**	Center	**Direction**	Center	**Direction**	Center
Size	62	**Size**	90	**Size**	274	**Size**	-90	**Size**	331	**Size**	-90	**Size**	2284	**Size**	90
Loss Of Guidance	N/A	**Loss Of Guidance**	N/A	**Loss Of Guidance**	N/A	**Loss Of Guidance**	N/A	**Loss Of Guidance**	N/A	**Loss Of Guidance**	N/A	**Loss Of Guidance**	N/A	**Loss Of Guidance**	N/A
Obstacle Avoidance	1	**Obstacle Avoidance**	1	**Obstacle Avoidance**	1	**Obstacle Avoidance**	1	**Obstacle Avoidance**	1	**Obstacle Avoidance**	1	**Obstacle Avoidance**	1	**Obstacle Avoidance**	1
Output	N/A	**Output**	N/A	**Output**	N/A	**Output**	N/A	**Output**	N/A	**Output**	N/A	**Output**	N/A	**Output**	N/A
END OF STEP		**END OF STEP**		**END OF STEP**		**END OF STEP**		**END OF STEP**		**ID OF STEP**		**END OF STEP**		**END OF STEP**	
END MODE	Distance	**END MODE**	Distance	**END MODE**	Distance	**END MODE**	Distance	**END MODE**	Distance	**END MODE**	Distance	**END MODE**	Distance	**END MODE**	Distance
END ACTION	Merge	**END ACTION**	Merge	**END ACTION**	Merge	**END ACTION**	Merge	**END ACTION**	Merge	**END ACTION**	Merge	**END ACTION**	Merge	**END ACTION**	Merge
NEXT ROUTE	23	**NEXT ROUTE**	23	**NEXT ROUTE**	23	**NEXT ROUTE**	23	**NEXT ROUTE**	23	**NEXT ROUTE**	23	**NEXT ROUTE**	23	**NEXT ROUTE**	23
NEXT STEP	**18**	**NEXT STEP**	**19**	**NEXT STEP**	**20**	**NEXT STEP**	**21**	**NEXT STEP**	**22**	**NEXT STEP**	**23**	**NEXT STEP**	**24**	**NEXT STEP**	**25**

Route 23:25		Route 23:26		Route 23:27		Route 23:28		Route 23:29		Route 23:30		Route 23:31		Route 23:32	
STEP INITIATION		**STEP INITIATION**		**STEP INITIATION**		**STEP INITIATION**		**STEP INITIATION**		**STEP INITIATION**		**STEP INITIATION**		**STEP INITIATION**	
Go Mode	Auto	**Go Mode**	Auto	**Go Mode**	Auto	**Go Mode**	Auto	**Go Mode**	Auto	**Go Mode**	Auto	**Go Mode**	Auto	**Go Mode**	Auto
Radio Input	dio Input 1-	**Radio Input**	dio Input 1-	**Radio Input**	dio Input 1-	**Radio Input**	dio Input 1-	**Radio Input**	dio Input 1-	**Radio Input**	dio Input 1-	**Radio Input**	dio Input 1-	**Radio Input**	dio Input 1-
Hard Wire Input	N/A	**Hard Wire Input**	N/A	**Hard Wire Input**	N/A	**Hard Wire Input**	N/A	**Hard Wire Input**	N/A	**Hard Wire Input**	N/A	**Hard Wire Input**	N/A	**Hard Wire Input**	Cart prese
BIT	N/A	**BIT**	N/A	**BIT**	N/A	**BIT**	N/A	**BIT**	N/A	**BIT**	N/A	**BIT**	N/A	**BIT**	N/A
STEP ACTION		**STEP ACTION**		**STEP ACTION**		**STEP ACTION**		**STEP ACTION**		**STEP ACTION**		**STEP ACTION**		**STEP ACTION**	
Function	Forward	**Function**	Rotate	**Function**	Reverse	**Function**	Delay	**Function**	Forward	**Function**	Rotate	**Function**	Reverse	**Function**	Forward
Speed	33	**Speed**	33	**Speed**	33	**Speed**	33	**Speed**	33	**Speed**	33	**Speed**	33	**Speed**	33
Navigation	DR	**Navigation**	DR	**Navigation**	DR	**Navigation**	DR	**Navigation**	DR	**Navigation**	DR	**Navigation**	DR	**Navigation**	DR
Direction	Center	**Direction**	Center	**Direction**	Center	**Direction**	Center	**Direction**	Center	**Direction**	Center	**Direction**	Center	**Direction**	Center
Size	1240	**Size**	90	**Size**	279	**Size**	5	**Size**	164	**Size**	-90	**Size**	102	**Size**	102
Loss Of Guidance	N/A	**Loss Of Guidance**	N/A	**Loss Of Guidance**	N/A	**Loss Of Guidance**	N/A	**Loss Of Guidance**	N/A	**Loss Of Guidance**	N/A	**Loss Of Guidance**	N/A	**Loss Of Guidance**	N/A
Obstacle Avoidance	1	**Obstacle Avoidance**	1	**Obstacle Avoidance**	1	**Obstacle Avoidance**	1	**Obstacle Avoidance**	1	**Obstacle Avoidance**	1	**Obstacle Avoidance**	1	**Obstacle Avoidance**	1
Output	N/A	**Output**	N/A	**Output**	N/A	**Output**	#7 Pin Drop	**Output**		**Output**		**Output**	#6 pin up	**Output**	N/a
END OF STEP		**END OF STEP**		**END OF STEP**		**END OF STEP**		**END OF STEP**		**END OF STEP**		**END OF STEP**		**END OF STEP**	
END MODE	Distance	**END MODE**	Distance	**END MODE**	Distance	**END MODE**	time	**END MODE**	Distance	**END MODE**	Distance	**END MODE**	Distance	**END MODE**	Distance
END ACTION	Merge	**END ACTION**	Merge	**END ACTION**	Merge	**END ACTION**	Merge	**END ACTION**	Merge	**END ACTION**	Merge	**END ACTION**	Merge	**END ACTION**	Merge
NEXT ROUTE	23	**NEXT ROUTE**	23	**NEXT ROUTE**	23	**NEXT ROUTE**	23	**NEXT ROUTE**	23	**NEXT ROUTE**	23	**NEXT ROUTE**	23	**NEXT ROUTE**	23
NEXT STEP	**26**	**NEXT STEP**	**27**	**NEXT STEP**	**28**	**NEXT STEP**	**29**	**NEXT STEP**	**30**	**NEXT STEP**	**31**	**NEXT STEP**	**32**	**NEXT STEP**	**33**

Route 23:33		Route 23:34		Route 23:35		Route 23:36		Route 23:37		Route 23:38		Route 23:39		Route 23:40	
STEP INITIATION		STEP INITIATION		STEP INITIATION		STEP INITIATION		STEP INITIATION		STEP INITIATION		STEP INITIATION		STEP INITIATION	
Go Mode	Auto	Go Mode	Auto	Go Mode	Auto	Go Mode	Auto	Go Mode	Auto	Go Mode	Auto	Go Mode	Auto	Go Mode	Auto
Radio Input	dio Input 1-	Radio Input	dio Input 1-	Radio Input	dio Input 1-	Radio Input	dio Input 1-	Radio Input	dio Input 1-	Radio Input	dio Input 1-	Radio Input	dio Input 1-	Radio Input	dio Input 1-
Hard Wire Input	N/A	Hard Wire Input	N/A	Hard Wire Input	N/A	Hard Wire Input	N/A	Hard Wire Input	N/A	Hard Wire Input	N/A	Hard Wire Input	N/A	Hard Wire Input	N/A
BIT	N/A	BIT	N/A	BIT	N/A	BIT	N/A	BIT	N/A	BIT	N/A	BIT	N/A	BIT	N/A
STEP ACTION		STEP ACTION		STEP ACTION		STEP ACTION		STEP ACTION		STEP ACTION		STEP ACTION		STEP ACTION	
Function	Rotate	Function	Reverse	Function	Rotate	Function	Reverse	Function	Delay	Function	Forward	Function	Rotate	Function	Reverse
Speed	33	Speed	33	Speed	33	Speed	33	Speed	33	Speed	33	Speed	33	Speed	33
Navigation	DR	Navigation	DR	Navigation	DR	Navigation	DR	Navigation	DR	Navigation	DR	Navigation	DR	Navigation	DR
Direction	Center	Direction	Center	Direction	Center	Direction	Center	Direction	Center	Direction	Center	Direction	Center	Direction	Center
Size	90	Size	60	Size	-45	Size	99	Size	5	Size	99	Size	45	Size	104
Loss Of Guidance	N/A	Loss Of Guidance	N/A	Loss Of Guidance	N/A	Loss Of Guidance	N/A	Loss Of Guidance	N/A	Loss Of Guidance	N/A	Loss Of Guidance	N/A	Loss Of Guidance	N/A
Obstacle Avoidance	1	Obstacle Avoidance	1	Obstacle Avoidance	1	Obstacle Avoidance	1	Obstacle Avoidance	1	Obstacle Avoidance	1	Obstacle Avoidance	1	Obstacle Avoidance	1
Output	N/a	Output	N/a	Output	N/a	Output	N/a	Output	#7 pin drop	Output	N/a	Output	N/a	Output	#7 pin raise
END OF STEP		END OF STEP		END OF STEP		END OF STEP		END OF STEP		END OF STEP		END OF STEP		END OF STEP	
END MODE	Distance	END MODE	Distance	END MODE	Distance	END MODE	Distance	END MODE	time	END MODE	Distance	END MODE	Distance	END MODE	Distance
END ACTION	Merge	END ACTION	Merge	END ACTION	Merge	END ACTION	Merge	END ACTION	Merge	END ACTION	Merge	END ACTION	Merge	END ACTION	Merge
NEXT ROUTE	23	NEXT ROUTE	23	NEXT ROUTE	23	NEXT ROUTE	23	NEXT ROUTE	23	NEXT ROUTE	23	NEXT ROUTE	23	NEXT ROUTE	23
NEXT STEP	34	NEXT STEP	35	NEXT STEP	36	NEXT STEP	37	NEXT STEP	38	NEXT STEP	39	NEXT STEP	40	NEXT STEP	41

Route 23:41		Route 23:42		Route 23:43		Route 23:44		Route 23:45		Route 23:46		Route 23:47		Route 23:48	
STEP INITIATION		STEP INITIATION		STEP INITIATION		STEP INITIATION		STEP INITIATION		STEP INITIATION		STEP INITIATION		STEP INITIATION	
Go Mode	Auto	Go Mode	Auto	Go Mode	Auto	Go Mode	Auto	Go Mode	Auto	Go Mode	Auto	Go Mode	Auto	Go Mode	Auto
Radio Input	dio Input 1-	Radio Input	dio Input 1-	Radio Input	dio Input 1-	Radio Input	dio Input 1-	Radio Input	dio Input 1-	Radio Input	dio Input 1-	Radio Input	dio Input 1-	Radio Input	dio Input 1-
Hard Wire Input	N/A	Hard Wire Input	N/A	Hard Wire Input	N/A	Hard Wire Input	N/A	Hard Wire Input	N/A	Hard Wire Input	N/A	Hard Wire Input	N/A	Hard Wire Input	N/A
BIT	N/A	BIT	N/A	BIT	N/A	BIT	N/A	BIT	N/A	BIT	N/A	BIT	N/A	BIT	N/A
STEP ACTION		STEP ACTION		STEP ACTION		STEP ACTION		STEP ACTION		STEP ACTION		STEP ACTION		STEP ACTION	
Function	Forward	Function	Rotate	Function	Reverse	Function	Delay	Function	Forward	Function	Rotate	Function	Reverse	Function	Rotate
Speed	33	Speed	33	Speed	33	Speed	33	Speed	33	Speed	33	Speed	33	Speed	33
Navigation	DR	Navigation	DR	Navigation	DR	Navigation	DR	Navigation	DR	Navigation	DR	Navigation	DR	Navigation	DR
Direction	Center	Direction	Center	Direction	Center	Direction	Center	Direction	Center	Direction	Center	Direction	Center	Direction	Center
Size	164	Size	-90	Size	102	Size	5	Size	102	Size	90	Size	60	Size	-45
Loss Of Guidance	N/A	Loss Of Guidance	N/A	Loss Of Guidance	N/A	Loss Of Guidance	N/A	Loss Of Guidance	N/A	Loss Of Guidance	N/A	Loss Of Guidance	N/A	Loss Of Guidance	N/A
Obstacle Avoidance	1	Obstacle Avoidance	1	Obstacle Avoidance	1	Obstacle Avoidance	1	Obstacle Avoidance	1	Obstacle Avoidance	1	Obstacle Avoidance	1	Obstacle Avoidance	1
Output	N/A	Output	N/A	Output	N/A	Output	#7 Pin Drop	Output	N/a	Output	N/a	Output	N/a	Output	N/a
END OF STEP		END OF STEP		END OF STEP		END OF STEP		END OF STEP		END OF STEP		END OF STEP		END OF STEP	
END MODE	Distance	END MODE	Distance	END MODE	Distance	END MODE	Time	END MODE	Distance	END MODE	Distance	END MODE	Distance	END MODE	Distance
END ACTION	Merge	END ACTION	Merge	END ACTION	Merge	END ACTION	Merge	END ACTION	Merge	END ACTION	Merge	END ACTION	Merge	END ACTION	Merge
NEXT ROUTE	23	NEXT ROUTE	23	NEXT ROUTE	23	NEXT ROUTE	23	NEXT ROUTE	23	NEXT ROUTE	23	NEXT ROUTE	23	NEXT ROUTE	23
NEXT STEP	42	NEXT STEP	43	NEXT STEP	44	NEXT STEP	45	NEXT STEP	46	NEXT STEP	47	NEXT STEP	48	NEXT STEP	49

Route 23:49		Route 23:50		Route 23:51		Route 23:52		Route 23:53		Route 23:54		Route 23:55		Route 23:56	
STEP INITIATION		STEP INITIATION		STEP INITIATION		STEP INITIATION		STEP INITIATION		STEP INITIATION		STEP INITIATION		STEP INITIATION	
Go Mode	Auto	Go Mode	Auto	Go Mode	Auto	Go Mode	Auto	Go Mode	Auto	Go Mode	Auto	Go Mode	Auto	Go Mode	Auto
Radio Input	dio Input 1-	Radio Input	dio Input 1-	Radio Input	dio Input 1-	Radio Input	dio Input 1-	Radio Input	dio Input 1-	Radio Input	dio Input 1-	Radio Input	dio Input 1-	Radio Input	dio Input 1-
Hard Wire Input	N/A	Hard Wire Input	Cart Prese	Hard Wire Input		Hard Wire Input		Hard Wire Input		Hard Wire Input		Hard Wire Input		Hard Wire Input	
BIT	N/A	BIT	N/A	BIT	N/A	BIT	N/A	BIT	N/A	BIT	N/A	BIT	N/A	BIT	N/A
STEP ACTION		STEP ACTION		STEP ACTION		STEP ACTION		STEP ACTION		STEP ACTION		STEP ACTION		STEP ACTION	
Function	Reverse	Function	Forward	Function	Rotate	Function	Forward	Function	Rotate	Function	Forward	Function	Rotate	Function	Forward
Speed	33	Speed	33	Speed	33	Speed	33	Speed	33	Speed	33	Speed	33	Speed	33
Navigation	DR	Navigation	DR	Navigation	DR	Navigation	DR	Navigation	DR	Navigation	DR	Navigation	DR	Navigation	DR
Direction	Center	Direction	Center	Direction	Center	Direction	Center	Direction	Center	Direction	Center	Direction	Center	Direction	Center
Size	99	Size	99	Size	45	Size	174	Size	90	Size	1240	Size	-90	Size	2284
Loss Of Guidance	N/A	Loss Of Guidance	N/A	Loss Of Guidance	N/A	Loss Of Guidance	N/A	Loss Of Guidance	N/A	Loss Of Guidance	N/A	Loss Of Guidance	N/A	Loss Of Guidance	N/A
Obstacle Avoidance	1	Obstacle Avoidance	1	Obstacle Avoidance	1	Obstacle Avoidance	1	Obstacle Avoidance	1	Obstacle Avoidance	1	Obstacle Avoidance	1	Obstacle Avoidance	1
Output	#6 Pin Raise	Output	N/a	Output	N/a	Output	N/a	Output	N/a	Output	N/a	Output	N/a	Output	N/a
END OF STEP		END OF STEP		END OF STEP		END OF STEP		END OF STEP		END OF STEP		END OF STEP		END OF STEP	
END MODE	Distance	END MODE	Distance	END MODE	Distance	END MODE	Distance	END MODE	Distance	END MODE	Distance	END MODE	Distance	END MODE	Distance
END ACTION	Merge	END ACTION	Merge	END ACTION	Merge	END ACTION	Merge	END ACTION	Merge	END ACTION	Merge	END ACTION	Merge	END ACTION	Merge
NEXT ROUTE	23	NEXT ROUTE	23	NEXT ROUTE	23	NEXT ROUTE	23	NEXT ROUTE	23	NEXT ROUTE	23	NEXT ROUTE	23	NEXT ROUTE	23
NEXT STEP	50	NEXT STEP	51	NEXT STEP	52	NEXT STEP	53	NEXT STEP	54	NEXT STEP	55	NEXT STEP	56	NEXT STEP	57

Route 23:57		Route 23:58		Route 23:59		Route 23:60		Route 23:61		Route 23:62		Route 23:63		Route 23:64	
STEP INITIATION		STEP INITIATION		STEP INITIATION		STEP INITIATION		STEP INITIATION		STEP INITIATION		STEP INITIATION		STEP INITIATION	
Go Mode	Auto	Go Mode	Auto	Go Mode	Auto	Go Mode	Auto	Go Mode	Auto	Go Mode	Auto	Go Mode	Auto	Go Mode	Auto
Radio Input	dio Input 1-	Radio Input	dio Input 1-	Radio Input	dio Input 1-	Radio Input	dio Input 1-	Radio Input	dio Input 1-	Radio Input	dio Input 1-	Radio Input	dio Input 1-	Radio Input	dio Input 1-
Hard Wire Input		Hard Wire Input		Hard Wire Input		Hard Wire Input		Hard Wire Input		Hard Wire Input		Hard Wire Input		Hard Wire Input	
BIT	N/A	BIT	N/A	BIT	N/A	BIT	N/A	BIT	N/A	BIT	N/A	BIT	N/A	BIT	N/A
STEP ACTION		STEP ACTION		STEP ACTION		STEP ACTION		STEP ACTION		STEP ACTION		STEP ACTION		STEP ACTION	
Function	Rotate	Function	Forward	Function	Rotate	Function	Forward	Function	Rotate	Function	Reverse	Function	Dellay	Function	Forward
Speed	33	Speed	33	Speed	33	Speed	33	Speed	33	Speed	33	Speed	33	Speed	33
Navigation	DR	Navigation	DR	Navigation	DR	Navigation	DR	Navigation	DR	Navigation	DR	Navigation	DR	Navigation	DR
Direction	Center	Direction	Center	Direction	Center	Direction	Center	Direction	Center	Direction	Center	Direction	Center	Direction	Center
Size	90	Size	331	Size	90	Size	274	Size	90	Size	62	Size	5	Size	62
Loss Of Guidance	N/A	Loss Of Guidance	N/A	Loss Of Guidance	N/A	Loss Of Guidance	N/A	Loss Of Guidance	N/A	Loss Of Guidance	N/A	Loss Of Guidance	N/A	Loss Of Guidance	N/A
Obstacle Avoidance	1	Obstacle Avoidance	1	Obstacle Avoidance	1	Obstacle Avoidance	1	Obstacle Avoidance	1	Obstacle Avoidance	1	Obstacle Avoidance	1	Obstacle Avoidance	1
Output	N/a	Output	N/a	Output	N/a	Output	N/a	Output	N/a	Output	N/a	Output	#7 Pin Drop	Output	
END OF STEP		END OF STEP		END OF STEP		END OF STEP		END OF STEP		END OF STEP		END OF STEP		END OF STEP	
END MODE	Distance	END MODE	Distance	END MODE	Distance	END MODE	Distance	END MODE	Distance	END MODE	Distance	END MODE	time	END MODE	Distance
END ACTION	Merge	END ACTION	Merge	END ACTION	Merge	END ACTION	Merge	END ACTION	Merge	END ACTION	Merge	END ACTION	Merge	END ACTION	Merge
NEXT ROUTE	23	NEXT ROUTE	23	NEXT ROUTE	23	NEXT ROUTE	23	NEXT ROUTE	23	NEXT ROUTE	23	NEXT ROUTE	23	NEXT ROUTE	23
NEXT STEP	58	NEXT STEP	59	NEXT STEP	60	NEXT STEP	61	NEXT STEP	62	NEXT STEP	63	NEXT STEP	64	NEXT STEP	65

Route 23:65		Route 23:66		Route 23:67		Route 23:68		Route 23:69		Route 23:70		Route 23:71		Route 23:72	
STEP INITIATION		STEP INITIATION		STEP INITIATION		STEP INITIATION		STEP INITIATION		STEP INITIATION		STEP INITIATION		STEP INITIATION	
Go Mode	Auto	Go Mode	Auto	Go Mode	Auto	Go Mode	Auto	Go Mode	Auto	Go Mode	Auto	Go Mode	Auto	Go Mode	Auto
Radio Input	dio Input 1-	Radio Input	dio Input 1-	Radio Input	dio Input 1-	Radio Input	dio Input 1-	Radio Input	dio Input 1-	Radio Input	dio Input 1-	Radio Input	dio Input 1-	Radio Input	dio Input 1-
Hard Wire Input		Hard Wire Input		Hard Wire Input		Hard Wire Input		Hard Wire Input		Hard Wire Input		Hard Wire Input	N/a	Hard Wire Input	N/a
BIT	N/A	BIT	N/A	BIT	N/A	BIT	N/A	BIT	N/A	BIT	N/A	BIT	N/A	BIT	N/A
STEP ACTION		STEP ACTION		STEP ACTION		STEP ACTION		STEP ACTION		STEP ACTION		STEP ACTION		STEP ACTION	
Function	Rotate	Function	Forward	Function	Rotate	Function	Forward	Function	Rotate	Function	Forward	Function	Rotate	Function	Forward
Speed	33	Speed	33	Speed	33	Speed	33	Speed	33	Speed	33	Speed	33	Speed	33
Navigation	DR	Navigation	DR	Navigation	DR	Navigation	DR	Navigation	DR	Navigation	DR	Navigation	DR	Navigation	DR
Direction	Center	Direction	Center	Direction	Center	Direction	Center	Direction	Center	Direction	Center	Direction	Center	Direction	Center
Size	90	Size	274	Size	-90	Size	331	Size	-90	Size	2284	Size	90	Size	962
Loss Of Guidance	N/A	Loss Of Guidance	N/A	Loss Of Guidance	N/A	Loss Of Guidance	N/A	Loss Of Guidance	N/A	Loss Of Guidance	N/A	Loss Of Guidance	N/A	Loss Of Guidance	N/A
Obstacle Avoidance	1	Obstacle Avoidance	1	Obstacle Avoidance	1	Obstacle Avoidance	1	Obstacle Avoidance	1	Obstacle Avoidance	1	Obstacle Avoidance	1	Obstacle Avoidance	1
Output		Output		Output		Output		Output		Output		Output	N/a	Output	N/a
END OF STEP		END OF STEP		END OF STEP		END OF STEP		END OF STEP		END OF STEP		END OF STEP		END OF STEP	
END MODE	Distance	END MODE	Distance	END MODE	Distance	END MODE	Distance	END MODE	Distance	END MODE	Distance	END MODE	Distance	END MODE	Distance
END ACTION	Merge	END ACTION	Merge	END ACTION	Merge	END ACTION	Merge	END ACTION	Merge	END ACTION	Merge	END ACTION	Merge	END ACTION	Merge
NEXT ROUTE	23	NEXT ROUTE	23	NEXT ROUTE	23	NEXT ROUTE	23	NEXT ROUTE	23	NEXT ROUTE	23	NEXT ROUTE	23	NEXT ROUTE	23
NEXT STEP	66	NEXT STEP	67	NEXT STEP	68	NEXT STEP	69	NEXT STEP	70	NEXT STEP	71	NEXT STEP	72	NEXT STEP	73

Route 23:73		Route 23:74		Route 23:75		Route 23:76		Route 23:77		Route 23:78		Route 0: 1	
STEP INITIATION		STEP INITIATION		STEP INITIATION		STEP INITIATION		STEP INITIATION		STEP INITIATION		STEP INITIATION	
Go Mode	Auto	Go Mode	Auto	Go Mode	Auto	Go Mode	Auto	Go Mode	Auto	Go Mode	Auto	Go Mode	nput Trigge
Radio Input	dio Input 1-	Radio Input	dio Input 1-	Radio Input	dio Input 1-	Radio Input	dio Input 1-	Radio Input	dio Input 1-	Radio Input	dio Input 1-	Radio Input	dio Input 1-
Hard Wire Input	N/a	Hard Wire Input	N/a	Hard Wire Input	N/a	Hard Wire Input	N/a	Hard Wire Input	N/a	Hard Wire Input	N/a	Hard Wire Input	N/a
BIT	N/A	BIT	N/A	BIT	N/A	BIT	N/A	BIT	N/A	BIT	N/A	BIT	BIT #1-#24
STEP ACTION		STEP ACTION		STEP ACTION		STEP ACTION		STEP ACTION		STEP ACTION		STEP ACTION	
Function	Rotate	Function	Forward	Function	Rotate	Function	Forward	Function	Rotate	Function	Reverse	Function	Auto
Speed	33	Speed	33	Speed	33	Speed	33	Speed	33	Speed	33	Speed	33
Navigation	DR	Navigation	DR	Navigation	DR	Navigation	DR	Navigation	DR	Navigation	DR	Navigation	DR
Direction	Center	Direction	Center	Direction	Center	Direction	Center	Direction	Center	Direction	Center	Direction	Center
Size	-90	Size	525	Size	90	Size	417	Size	-90	Size	66	Size	66
Loss Of Guidance	N/A	Loss Of Guidance	N/A	Loss Of Guidance	N/A	Loss Of Guidance	N/A	Loss Of Guidance	N/A	Loss Of Guidance	N/A	Loss Of Guidance	N/A
Obstacle Avoidance	1	Obstacle Avoidance	1	Obstacle Avoidance	1	Obstacle Avoidance	1	Obstacle Avoidance	1	Obstacle Avoidance	1	Obstacle Avoidance	1
Output	N/a	Output	N/a	Output	N/a	Output	N/a	Output	N/a	Output	N/a	Output	N/a
END OF STEP		END OF STEP		END OF STEP		END OF STEP		END OF STEP		END OF STEP		END OF STEP	
END MODE	Distance	END MODE	Distance	END MODE	Distance	END MODE	Distance	END MODE	Distance	END MODE	Distance	END MODE	Distance
END ACTION	Merge	END ACTION	Merge	END ACTION	Merge	END ACTION	Merge	END ACTION	Merge	END ACTION	Merge	END ACTION	Merge
NEXT ROUTE	23	NEXT ROUTE	23	NEXT ROUTE	23	NEXT ROUTE	23	NEXT ROUTE	23	NEXT ROUTE	0	NEXT ROUTE	0
NEXT STEP	74	NEXT STEP	75	NEXT STEP	76	NEXT STEP	77	NEXT STEP	78	NEXT STEP	1	NEXT STEP	1

Tier 3 Route 24

Route 24:1		Route 24:2		Route 24:3		Route 24:4		Route 24:5		Route 24:6		Route 24:7		Route 24:8	
STEP INITIATION		**STEP INITIATION**		**STEP INITIATION**		**STEP INITIATION**		**STEP INITIATION**		**STEP INITIATION**		**STEP INITIATION**		**STEP INITIATION**	
Go Mode	nput Triggers	**Go Mode**	Auto	**Go Mode**	Auto	**Go Mode**	Auto	**Go Mode**	Auto	**Go Mode**	Auto	**Go Mode**	Auto	**Go Mode**	Auto
Radio Input	adio Input 1-2	**Radio Input**	dio Input 1-	**Radio Input**	dio Input 1-	**Radio Input**	dio Input 1-	**Radio Input**	dio Input 1-	**Radio Input**	dio Input 1-	**Radio Input**	dio Input 1-	**Radio Input**	dio Input 1-
Hard Wire Input	N/A	**Hard Wire Input**	N/A	**Hard Wire Input**	N/A	**Hard Wire Input**	N/A	**Hard Wire Input**	N/A	**Hard Wire Input**	N/A	**Hard Wire Input**	N/A	**Hard Wire Input**	N/A
BIT	Bit #1 off	**BIT**	N/A	**BIT**	N/A	**BIT**	N/A	**BIT**	N/A	**BIT**	N/A	**BIT**	N/A	**BIT**	N/A
Bit#12 On, #19 On	it #5 and 6 Off														
Home Position RFID	it #7 and 9 of														
	t #8 and 10 o														
STEP ACTION		**STEP ACTION**		**STEP ACTION**		**STEP ACTION**		**STEP ACTION**		**STEP ACTION**		**STEP ACTION**		**STEP ACTION**	
Function	Dispatch	**Function**	Forward	**Function**	Rotate	**Function**	Forward	**Function**	Rotate	**Function**	Forward	**Function**	Rotate	**Function**	Forward
Speed	N/A	**Speed**	33	**Speed**	33	**Speed**	33	**Speed**	33	**Speed**	33	**Speed**	33	**Speed**	33
Navigation	N/A	**Navigation**	DR	**Navigation**	DR	**Navigation**	DR	**Navigation**	DR	**Navigation**	DR	**Navigation**	DR	**Navigation**	DR
Direction	N/A	**Direction**	Center	**Direction**	Center	**Direction**	Center	**Direction**	Center	**Direction**	Center	**Direction**	Center	**Direction**	Center
Size	N/A	**Size**	66	**Size**	-90	**Size**	417	**Size**	-90	**Size**	525	**Size**	90	**Size**	962
Loss Of Guidance	N/A	**Loss Of Guidance**	N/A	**Loss Of Guidance**	N/A	**Loss Of Guidance**	N/A	**Loss Of Guidance**	N/A	**Loss Of Guidance**	N/A	**Loss Of Guidance**	N/A	**Loss Of Guidance**	N/A
Obstacle Avoidance	N/A	**Obstacle Avoidance**	1	**Obstacle Avoidance**	1	**Obstacle Avoidance**	1	**Obstacle Avoidance**	1	**Obstacle Avoidance**	1	**Obstacle Avoidance**	1	**Obstacle Avoidance**	1
Output	N/A	**Output**	N/A	**Output**	N/A	**Output**	N/A	**Output**	N/A	**Output**	N/A	**Output**	N/A	**Output**	N/A
END OF STEP		**END OF STEP**		**END OF STEP**		**END OF STEP**		**END OF STEP**		**END OF STEP**		**END OF STEP**		**END OF STEP**	
END MODE	N/A	**END MODE**	Distance	**END MODE**	Distance	**END MODE**	Distance	**END MODE**	Distance	**END MODE**	Distance	**END MODE**	Distance	**END MODE**	Distance
END ACTION	e Bit #12, #1	**END ACTION**	Merge	**END ACTION**	Merge	**END ACTION**	Merge	**END ACTION**	Merge	**END ACTION**	Merge	**END ACTION**	Merge	**END ACTION**	Merge
NEXT ROUTE	24	**NEXT ROUTE**	24	**NEXT ROUTE**	24	**NEXT ROUTE**	24	**NEXT ROUTE**	24	**NEXT ROUTE**	24	**NEXT ROUTE**	24	**NEXT ROUTE**	24
NEXT STEP	**2**	**NEXT STEP**	**3**	**NEXT STEP**	**4**	**NEXT STEP**	**5**	**NEXT STEP**	**6**	**NEXT STEP**	**7**	**NEXT STEP**	**8**	**NEXT STEP**	**9**

Route 24:9		Route 24:10		Route 24:11		Route 24:12		Route 24:13		Route 24:14		Route 24:15		Route 24:16	
STEP INITIATION		**STEP INITIATION**		**STEP INITIATION**		**STEP INITIATION**		**STEP INITIATION**		**STEP INITIATION**		**STEP INITIATION**		**STEP INITIATION**	
Go Mode	Auto	**Go Mode**	Auto	**Go Mode**	Auto	**Go Mode**	Auto	**Go Mode**	Auto	**Go Mode**	Auto	**Go Mode**	Auto	**Go Mode**	Auto
Radio Input	dio Input 1-	**Radio Input**	dio Input 1-	**Radio Input**	dio Input 1-	**Radio Input**	dio Input 1-	**Radio Input**	dio Input 1-	**Radio Input**	dio Input 1-	**Radio Input**	dio Input 1-	**Radio Input**	dio Input 1-
Hard Wire Input	N/A	**Hard Wire Input**	N/A	**Hard Wire Input**	N/A	**Hard Wire Input**	N/A	**Hard Wire Input**	N/A	**Hard Wire Input**	N/A	**Hard Wire Input**	N/A	**Hard Wire Input**	N/A
BIT	N/A	**BIT**	N/A	**BIT**	N/A	**BIT**	N/A	**BIT**	N/A	**BIT**	N/A	**BIT**	N/A	**BIT**	N/A
STEP ACTION		**STEP ACTION**		**STEP ACTION**		**STEP ACTION**		**STEP ACTION**		**STEP ACTION**		**STEP ACTION**		**STEP ACTION**	
Function	Rotate	**Function**	Forward	**Function**	Rotate	**Function**	Forward	**Function**	Rotate	**Function**	Forward	**Function**	Rotate	**Function**	Reverse
Speed	33	**Speed**	33	**Speed**	33	**Speed**	33	**Speed**	33	**Speed**	33	**Speed**	33	**Speed**	33
Navigation	DR	**Navigation**	DR	**Navigation**	DR	**Navigation**	DR	**Navigation**	DR	**Navigation**	DR	**Navigation**	DR	**Navigation**	DR
Direction	Center	**Direction**	Center	**Direction**	Center	**Direction**	Center	**Direction**	Center	**Direction**	Center	**Direction**	Center	**Direction**	Center
Size	-90	**Size**	2284	**Size**	90	**Size**	511	**Size**	90	**Size**	144	**Size**	-90	**Size**	62
Loss Of Guidance	N/A	**Loss Of Guidance**	N/A	**Loss Of Guidance**	N/A	**Loss Of Guidance**	N/A	**Loss Of Guidance**	N/A	**Loss Of Guidance**	N/A	**Loss Of Guidance**	N/A	**Loss Of Guidance**	N/A
Obstacle Avoidance	1	**Obstacle Avoidance**	1	**Obstacle Avoidance**	1	**Obstacle Avoidance**	1	**Obstacle Avoidance**	1	**Obstacle Avoidance**	1	**Obstacle Avoidance**	1	**Obstacle Avoidance**	1
Output	N/A	**Output**	N/A	**Output**	N/A	**Output**	N/A	**Output**	N/A	**Output**	N/A	**Output**	N/A	**Output**	#6 Pin Up
END OF STEP		**END OF STEP**		**END OF STEP**		**END OF STEP**		**END OF STEP**		**END OF STEP**		**END OF STEP**		**END OF STEP**	
END MODE	Distance	**END MODE**	Distance	**END MODE**	Distance	**END MODE**	Distance	**END MODE**	Distance	**END MODE**	Distance	**END MODE**	Distance	**END MODE**	Distance
END ACTION	Merge	**END ACTION**	Merge	**END ACTION**	Merge	**END ACTION**	Merge	**END ACTION**	Merge	**END ACTION**	Merge	**END ACTION**	Merge	**END ACTION**	Merge
NEXT ROUTE	24	**NEXT ROUTE**	24	**NEXT ROUTE**	24	**NEXT ROUTE**	24	**NEXT ROUTE**	24	**NEXT ROUTE**	24	**NEXT ROUTE**	24	**NEXT ROUTE**	24
NEXT STEP	**10**	**NEXT STEP**	**11**	**NEXT STEP**	**12**	**NEXT STEP**	**13**	**NEXT STEP**	**14**	**NEXT STEP**	**15**	**NEXT STEP**	**16**	**NEXT STEP**	**17**

Route 24:17		Route 24:18		Route 24:19		Route 24:20		Route 24:21		Route 24:22		Route 24:23		Route 24:24	
STEP INITIATION		**STEP INITIATION**		**STEP INITIATION**		**STEP INITIATION**		**STEP INITIATION**		**STEP INITIATION**		**STEP INITIATION**		**STEP INITIATION**	
Go Mode	Auto	**Go Mode**	Auto	**Go Mode**	Auto	**Go Mode**	Auto	**Go Mode**	Auto	**Go Mode**	Auto	**Go Mode**	Auto	**Go Mode**	Auto
Radio Input	dio Input 1-	**Radio Input**	dio Input 1-	**Radio Input**	dio Input 1-	**Radio Input**	dio Input 1-	**Radio Input**	dio Input 1-	**Radio Input**	dio Input 1-	**Radio Input**	dio Input 1-	**Radio Input**	dio Input 1-
Hard Wire Input	N/A	**Hard Wire Input**	N/A	**Hard Wire Input**	N/A	**Hard Wire Input**	N/A	**Hard Wire Input**	N/A	**Hard Wire Input**	N/A	**Hard Wire Input**	N/A	**Hard Wire Input**	N/A
BIT	N/A	**BIT**	N/A	**BIT**	N/A	**BIT**	N/A	**BIT**	N/A	**BIT**	N/A	**BIT**	N/A	**BIT**	N/A
STEP ACTION		**STEP ACTION**		**STEP ACTION**		**STEP ACTION**		**STEP ACTION**		**EP ACTION**		**STEP ACTION**		**STEP ACTION**	
Function	Forward	**Function**	Rotate	**Function**	Forward	**Function**	Rotate	**Function**	Forward	**Function**	Rotate	**Function**	Forward	**Function**	Rotate
Speed	33	**Speed**	33	**Speed**	33	**Speed**	33	**Speed**	33	**Speed**	33	**Speed**	33	**Speed**	33
Navigation	DR	**Navigation**	DR	**Navigation**	DR	**Navigation**	DR	**Navigation**	DR	**Navigation**	DR	**Navigation**	DR	**Navigation**	DR
Direction	Center	**Direction**	Center	**Direction**	Center	**Direction**	Center	**Direction**	Center	**Direction**	Center	**Direction**	Center	**Direction**	Center
Size	62	**Size**	-90	**Size**	144	**Size**	-90	**Size**	511	**Size**	-90	**Size**	2284	**Size**	90
Loss Of Guidance	N/A	**Loss Of Guidance**	N/A	**Loss Of Guidance**	N/A	**Loss Of Guidance**	N/A	**Loss Of Guidance**	N/A	**Loss Of Guidance**	N/A	**Loss Of Guidance**	N/A	**Loss Of Guidance**	N/A
Obstacle Avoidance	1	**Obstacle Avoidance**	1	**Obstacle Avoidance**	1	**Obstacle Avoidance**	1	**Obstacle Avoidance**	1	**Obstacle Avoidance**	1	**Obstacle Avoidance**	1	**Obstacle Avoidance**	1
Output	N/A	**Output**	N/A	**Output**	N/A	**Output**	N/A	**Output**	N/A	**Output**	N/A	**Output**	N/A	**Output**	N/A
END OF STEP		**END OF STEP**		**END OF STEP**		**END OF STEP**		**END OF STEP**		**ID OF STEP**		**END OF STEP**		**END OF STEP**	
END MODE	Distance	**END MODE**	Distance	**END MODE**	Distance	**END MODE**	Distance	**END MODE**	Distance	**END MODE**	Distance	**END MODE**	Distance	**END MODE**	Distance
END ACTION	Merge	**END ACTION**	Merge	**END ACTION**	Merge	**END ACTION**	Merge	**END ACTION**	Merge	**END ACTION**	Merge	**END ACTION**	Merge	**END ACTION**	Merge
NEXT ROUTE	24	**NEXT ROUTE**	24	**NEXT ROUTE**	24	**NEXT ROUTE**	24	**NEXT ROUTE**	24	**NEXT ROUTE**	24	**NEXT ROUTE**	24	**NEXT ROUTE**	24
NEXT STEP	**18**	**NEXT STEP**	**19**	**NEXT STEP**	**20**	**NEXT STEP**	**21**	**NEXT STEP**	**22**	**NEXT STEP**	**23**	**NEXT STEP**	**24**	**NEXT STEP**	**25**

Route 24:25		Route 24:26		Route 24:27		Route 24:28		Route 24:29		Route 24:30		Route 24:31		Route 24:32	
STEP INITIATION		**STEP INITIATION**		**STEP INITIATION**		**STEP INITIATION**		**STEP INITIATION**		**STEP INITIATION**		**STEP INITIATION**		**STEP INITIATION**	
Go Mode	Auto	**Go Mode**	Auto	**Go Mode**	Auto	**Go Mode**	Auto	**Go Mode**	Auto	**Go Mode**	Auto	**Go Mode**	Auto	**Go Mode**	Auto
Radio Input	dio Input 1-	**Radio Input**	dio Input 1-	**Radio Input**	dio Input 1-	**Radio Input**	dio Input 1-	**Radio Input**	dio Input 1-	**Radio Input**	dio Input 1-	**Radio Input**	dio Input 1-	**Radio Input**	dio Input 1-
Hard Wire Input	N/A	**Hard Wire Input**	N/A	**Hard Wire Input**	N/A	**Hard Wire Input**	N/A	**Hard Wire Input**	N/A	**Hard Wire Input**	N/A	**Hard Wire Input**	N/A	**Hard Wire Input**	Cart prese
BIT	N/A	**BIT**	N/A	**BIT**	N/A	**BIT**	N/A	**BIT**	N/A	**BIT**	N/A	**BIT**	N/A	**BIT**	N/A
STEP ACTION		**STEP ACTION**		**STEP ACTION**		**STEP ACTION**		**STEP ACTION**		**STEP ACTION**		**STEP ACTION**		**STEP ACTION**	
Function	Forward	**Function**	Rotate	**Function**	Reverse	**Function**	Delay	**Function**	Forward	**Function**	Rotate	**Function**	Reverse	**Function**	Forward
Speed	33	**Speed**	33	**Speed**	33	**Speed**	33	**Speed**	33	**Speed**	33	**Speed**	33	**Speed**	33
Navigation	DR	**Navigation**	DR	**Navigation**	DR	**Navigation**	DR	**Navigation**	DR	**Navigation**	DR	**Navigation**	DR	**Navigation**	DR
Direction	Center	**Direction**	Center	**Direction**	Center	**Direction**	Center	**Direction**	Center	**Direction**	Center	**Direction**	Center	**Direction**	Center
Size	1240	**Size**	90	**Size**	279	**Size**	5	**Size**	164	**Size**	-90	**Size**	102	**Size**	102
Loss Of Guidance	N/A	**Loss Of Guidance**	N/A	**Loss Of Guidance**	N/A	**Loss Of Guidance**	N/A	**Loss Of Guidance**	N/A	**Loss Of Guidance**	N/A	**Loss Of Guidance**	N/A	**Loss Of Guidance**	N/A
Obstacle Avoidance	1	**Obstacle Avoidance**	1	**Obstacle Avoidance**	1	**Obstacle Avoidance**	1	**Obstacle Avoidance**	1	**Obstacle Avoidance**	1	**Obstacle Avoidance**	1	**Obstacle Avoidance**	1
Output	N/A	**Output**	N/A	**Output**	N/A	**Output**	#7 Pin Drop	**Output**		**Output**		**Output**	#6 pin up	**Output**	N/a
END OF STEP		**END OF STEP**		**END OF STEP**		**END OF STEP**		**END OF STEP**		**END OF STEP**		**END OF STEP**		**END OF STEP**	
END MODE	Distance	**END MODE**	Distance	**END MODE**	Distance	**END MODE**	time	**END MODE**	Distance	**END MODE**	Distance	**END MODE**	Distance	**END MODE**	Distance
END ACTION	Merge	**END ACTION**	Merge	**END ACTION**	Merge	**END ACTION**	Merge	**END ACTION**	Merge	**END ACTION**	Merge	**END ACTION**	Merge	**END ACTION**	Merge
NEXT ROUTE	24	**NEXT ROUTE**	24	**NEXT ROUTE**	24	**NEXT ROUTE**	24	**NEXT ROUTE**	24	**NEXT ROUTE**	24	**NEXT ROUTE**	24	**NEXT ROUTE**	24
NEXT STEP	**26**	**NEXT STEP**	**27**	**NEXT STEP**	**28**	**NEXT STEP**	**29**	**NEXT STEP**	**30**	**NEXT STEP**	**31**	**NEXT STEP**	**32**	**NEXT STEP**	**33**

Route 24:33		Route 24:34		Route 24:35		Route 24:36		Route 24:37		Route 24:38		Route 24:39		Route 24:40	
STEP INITIATION		STEP INITIATION		STEP INITIATION		STEP INITIATION		STEP INITIATION		STEP INITIATION		STEP INITIATION		STEP INITIATION	
Go Mode	Auto	Go Mode	Auto	Go Mode	Auto	Go Mode	Auto	Go Mode	Auto	Go Mode	Auto	Go Mode	Auto	Go Mode	Auto
Radio Input	dio Input 1-	Radio Input	dio Input 1-	Radio Input	dio Input 1-	Radio Input	dio Input 1-	Radio Input	dio Input 1-	Radio Input	dio Input 1-	Radio Input	dio Input 1-	Radio Input	dio Input 1-
Hard Wire Input	N/A	Hard Wire Input	N/A	Hard Wire Input	N/A	Hard Wire Input	N/A	Hard Wire Input	N/A	Hard Wire Input	N/A	Hard Wire Input	N/A	Hard Wire Input	N/A
BIT	N/A	BIT	N/A	BIT	N/A	BIT	N/A	BIT	N/A	BIT	N/A	BIT	N/A	BIT	N/A
STEP ACTION		STEP ACTION		STEP ACTION		STEP ACTION		STEP ACTION		STEP ACTION		STEP ACTION		STEP ACTION	
Function	Rotate	Function	Reverse	Function	Rotate	Function	Reverse	Function	Delay	Function	Forward	Function	Rotate	Function	Reverse
Speed	33	Speed	33	Speed	33	Speed	33	Speed	33	Speed	33	Speed	33	Speed	33
Navigation	DR	Navigation	DR	Navigation	DR	Navigation	DR	Navigation	DR	Navigation	DR	Navigation	DR	Navigation	DR
Direction	Center	Direction	Center	Direction	Center	Direction	Center	Direction	Center	Direction	Center	Direction	Center	Direction	Center
Size	90	Size	60	Size	-45	Size	99	Size	5	Size	99	Size	45	Size	104
Loss Of Guidance	N/A	Loss Of Guidance	N/A	Loss Of Guidance	N/A	Loss Of Guidance	N/A	Loss Of Guidance	N/A	Loss Of Guidance	N/A	Loss Of Guidance	N/A	Loss Of Guidance	N/A
Obstacle Avoidance	1	Obstacle Avoidance	1	Obstacle Avoidance	1	Obstacle Avoidance	1	Obstacle Avoidance	1	Obstacle Avoidance	1	Obstacle Avoidance	1	Obstacle Avoidance	1
Output	N/a	Output	N/a	Output	N/a	Output	N/a	Output	#7 pin drop	Output	N/a	Output	N/a	Output	#7 pin raise
END OF STEP		END OF STEP		END OF STEP		END OF STEP		END OF STEP		END OF STEP		END OF STEP		END OF STEP	
END MODE	Distance	END MODE	Distance	END MODE	Distance	END MODE	Distance	END MODE	time	END MODE	Distance	END MODE	Distance	END MODE	Distance
END ACTION	Merge	END ACTION	Merge	END ACTION	Merge	END ACTION	Merge	END ACTION	Merge	END ACTION	Merge	END ACTION	Merge	END ACTION	Merge
NEXT ROUTE	24	NEXT ROUTE	24	NEXT ROUTE	24	NEXT ROUTE	24	NEXT ROUTE	24	NEXT ROUTE	24	NEXT ROUTE	24	NEXT ROUTE	24
NEXT STEP	**34**	NEXT STEP	**35**	NEXT STEP	**36**	NEXT STEP	**37**	NEXT STEP	**38**	NEXT STEP	**39**	NEXT STEP	**40**	NEXT STEP	**41**

Route 24:41		Route 24:42		Route 24:43		Route 24:44		Route 24:45		Route 24:46		Route 24:47		Route 24:48	
STEP INITIATION		STEP INITIATION		STEP INITIATION		STEP INITIATION		STEP INITIATION		STEP INITIATION		STEP INITIATION		STEP INITIATION	
Go Mode	Auto	Go Mode	Auto	Go Mode	Auto	Go Mode	Auto	Go Mode	Auto	Go Mode	Auto	Go Mode	Auto	Go Mode	Auto
Radio Input	dio Input 1-	Radio Input	dio Input 1-	Radio Input	dio Input 1-	Radio Input	dio Input 1-	Radio Input	dio Input 1-	Radio Input	dio Input 1-	Radio Input	dio Input 1-	Radio Input	dio Input 1-
Hard Wire Input	N/A	Hard Wire Input	N/A	Hard Wire Input	N/A	Hard Wire Input	N/A	Hard Wire Input	N/A	Hard Wire Input	N/A	Hard Wire Input	N/A	Hard Wire Input	N/A
BIT	N/A	BIT	N/A	BIT	N/A	BIT	N/A	BIT	N/A	BIT	N/A	BIT	N/A	BIT	N/A
STEP ACTION		STEP ACTION		STEP ACTION		STEP ACTION		STEP ACTION		STEP ACTION		STEP ACTION		STEP ACTION	
Function	Forward	Function	Rotate	Function	Reverse	Function	Delay	Function	Forward	Function	Rotate	Function	Reverse	Function	Rotate
Speed	33	Speed	33	Speed	33	Speed	33	Speed	33	Speed	33	Speed	33	Speed	33
Navigation	DR	Navigation	DR	Navigation	DR	Navigation	DR	Navigation	DR	Navigation	DR	Navigation	DR	Navigation	DR
Direction	Center	Direction	Center	Direction	Center	Direction	Center	Direction	Center	Direction	Center	Direction	Center	Direction	Center
Size	164	Size	-90	Size	102	Size	5	Size	102	Size	90	Size	60	Size	-45
Loss Of Guidance	N/A	Loss Of Guidance	N/A	Loss Of Guidance	N/A	Loss Of Guidance	N/A	Loss Of Guidance	N/A	Loss Of Guidance	N/A	Loss Of Guidance	N/A	Loss Of Guidance	N/A
Obstacle Avoidance	1	Obstacle Avoidance	1	Obstacle Avoidance	1	Obstacle Avoidance	1	Obstacle Avoidance	1	Obstacle Avoidance	1	Obstacle Avoidance	1	Obstacle Avoidance	1
Output	N/A	Output	N/A	Output	N/A	Output	#7 Pin Drop	Output	N/a	Output	N/a	Output	N/a	Output	N/a
END OF STEP		END OF STEP		END OF STEP		END OF STEP		END OF STEP		END OF STEP		END OF STEP		END OF STEP	
END MODE	Distance	END MODE	Distance	END MODE	Distance	END MODE	Time	END MODE	Distance	END MODE	Distance	END MODE	Distance	END MODE	Distance
END ACTION	Merge	END ACTION	Merge	END ACTION	Merge	END ACTION	Merge	END ACTION	Merge	END ACTION	Merge	END ACTION	Merge	END ACTION	Merge
NEXT ROUTE	24	NEXT ROUTE	24	NEXT ROUTE	24	NEXT ROUTE	24	NEXT ROUTE	24	NEXT ROUTE	24	NEXT ROUTE	24	NEXT ROUTE	24
NEXT STEP	**42**	NEXT STEP	**43**	NEXT STEP	**44**	NEXT STEP	**45**	NEXT STEP	**46**	NEXT STEP	**47**	NEXT STEP	**48**	NEXT STEP	**49**

Route 24:49		Route 24:50		Route 24:51		Route 24:52		Route 24:53		Route 24:54		Route 24:55		Route 24:56	
STEP INITIATION		STEP INITIATION		STEP INITIATION		STEP INITIATION		STEP INITIATION		STEP INITIATION		STEP INITIATION		STEP INITIATION	
Go Mode	Auto	Go Mode	Auto	Go Mode	Auto	Go Mode	Auto	Go Mode	Auto	Go Mode	Auto	Go Mode	Auto	Go Mode	Auto
Radio Input	dio Input 1-	Radio Input	dio Input 1-	Radio Input	dio Input 1-	Radio Input	dio Input 1-	Radio Input	dio Input 1-	Radio Input	dio Input 1-	Radio Input	dio Input 1-	Radio Input	dio Input 1-
Hard Wire Input	N/A	Hard Wire Input	Cart Prese	Hard Wire Input		Hard Wire Input		Hard Wire Input		Hard Wire Input		Hard Wire Input		Hard Wire Input	
BIT	N/A	BIT	N/A	BIT	N/A	BIT	N/A	BIT	N/A	BIT	N/A	BIT	N/A	BIT	N/A
STEP ACTION		STEP ACTION		STEP ACTION		STEP ACTION		STEP ACTION		STEP ACTION		STEP ACTION		STEP ACTION	
Function	Reverse	Function	Forward	Function	Rotate	Function	Forward	Function	Rotate	Function	Forward	Function	Rotate	Function	Forward
Speed	33	Speed	33	Speed	33	Speed	33	Speed	33	Speed	33	Speed	33	Speed	33
Navigation	DR	Navigation	DR	Navigation	DR	Navigation	DR	Navigation	DR	Navigation	DR	Navigation	DR	Navigation	DR
Direction	Center	Direction	Center	Direction	Center	Direction	Center	Direction	Center	Direction	Center	Direction	Center	Direction	Center
Size	99	Size	99	Size	45	Size	174	Size	90	Size	1240	Size	-90	Size	2284
Loss Of Guidance	N/A	Loss Of Guidance	N/A	Loss Of Guidance	N/A	Loss Of Guidance	N/A	Loss Of Guidance	N/A	Loss Of Guidance	N/A	Loss Of Guidance	N/A	Loss Of Guidance	N/A
Obstacle Avoidance	1	Obstacle Avoidance	1	Obstacle Avoidance	1	Obstacle Avoidance	1	Obstacle Avoidance	1	Obstacle Avoidance	1	Obstacle Avoidance	1	Obstacle Avoidance	1
Output	#6 Pin Raise	Output	N/a	Output	N/a	Output	N/a	Output	N/a	Output	N/a	Output	N/a	Output	N/a
END OF STEP		END OF STEP		END OF STEP		END OF STEP		END OF STEP		END OF STEP		END OF STEP		END OF STEP	
END MODE	Distance	END MODE	Distance	END MODE	Distance	END MODE	Distance	END MODE	Distance	END MODE	Distance	END MODE	Distance	END MODE	Distance
END ACTION	Merge	END ACTION	Merge	END ACTION	Merge	END ACTION	Merge	END ACTION	Merge	END ACTION	Merge	END ACTION	Merge	END ACTION	Merge
NEXT ROUTE	24	NEXT ROUTE	24	NEXT ROUTE	24	NEXT ROUTE	24	NEXT ROUTE	24	NEXT ROUTE	24	NEXT ROUTE	24	NEXT ROUTE	24
NEXT STEP	**50**	NEXT STEP	**51**	NEXT STEP	**52**	NEXT STEP	**53**	NEXT STEP	**54**	NEXT STEP	**55**	NEXT STEP	**56**	NEXT STEP	**57**

Route 24:57		Route 24:58		Route 24:59		Route 24:60		Route 24:61		Route 24:62		Route 24:63		Route 24:64	
STEP INITIATION		STEP INITIATION		STEP INITIATION		STEP INITIATION		STEP INITIATION		STEP INITIATION		STEP INITIATION		STEP INITIATION	
Go Mode	Auto	Go Mode	Auto	Go Mode	Auto	Go Mode	Auto	Go Mode	Auto	Go Mode	Auto	Go Mode	Auto	Go Mode	Auto
Radio Input	dio Input 1-	Radio Input	dio Input 1-	Radio Input	dio Input 1-	Radio Input	dio Input 1-	Radio Input	dio Input 1-	Radio Input	dio Input 1-	Radio Input	dio Input 1-	Radio Input	dio Input 1-
Hard Wire Input		Hard Wire Input		Hard Wire Input		Hard Wire Input		Hard Wire Input		Hard Wire Input		Hard Wire Input		Hard Wire Input	
BIT	N/A	BIT	N/A	BIT	N/A	BIT	N/A	BIT	N/A	BIT	N/A	BIT	N/A	BIT	N/A
STEP ACTION		STEP ACTION		STEP ACTION		STEP ACTION		STEP ACTION		STEP ACTION		STEP ACTION		STEP ACTION	
Function	Rotate	Function	Forward	Function	Rotate	Function	Forward	Function	Rotate	Function	Reverse	Function	Dellay	Function	Forward
Speed	33	Speed	33	Speed	33	Speed	33	Speed	33	Speed	33	Speed	33	Speed	33
Navigation	DR	Navigation	DR	Navigation	DR	Navigation	DR	Navigation	DR	Navigation	DR	Navigation	DR	Navigation	DR
Direction	Center	Direction	Center	Direction	Center	Direction	Center	Direction	Center	Direction	Center	Direction	Center	Direction	Center
Size	90	Size	511	Size	90	Size	144	Size	-90	Size	62	Size	5	Size	62
Loss Of Guidance	N/A	Loss Of Guidance	N/A	Loss Of Guidance	N/A	Loss Of Guidance	N/A	Loss Of Guidance	N/A	Loss Of Guidance	N/A	Loss Of Guidance	N/A	Loss Of Guidance	N/A
Obstacle Avoidance	1	Obstacle Avoidance	1	Obstacle Avoidance	1	Obstacle Avoidance	1	Obstacle Avoidance	1	Obstacle Avoidance	1	Obstacle Avoidance	1	Obstacle Avoidance	1
Output	N/a	Output	N/a	Output	N/a	Output	N/a	Output	N/a	Output	N/a	Output	#7 Pin Drop	Output	
END OF STEP		END OF STEP		END OF STEP		END OF STEP		END OF STEP		END OF STEP		END OF STEP		END OF STEP	
END MODE	Distance	END MODE	Distance	END MODE	Distance	END MODE	Distance	END MODE	Distance	END MODE	Distance	END MODE	time	END MODE	Distance
END ACTION	Merge	END ACTION	Merge	END ACTION	Merge	END ACTION	Merge	END ACTION	Merge	END ACTION	Merge	END ACTION	Merge	END ACTION	Merge
NEXT ROUTE	24	NEXT ROUTE	24	NEXT ROUTE	24	NEXT ROUTE	24	NEXT ROUTE	24	NEXT ROUTE	24	NEXT ROUTE	24	NEXT ROUTE	24
NEXT STEP	**58**	NEXT STEP	**59**	NEXT STEP	**60**	NEXT STEP	**61**	NEXT STEP	**62**	NEXT STEP	**63**	NEXT STEP	**64**	NEXT STEP	**65**

Route 24:65		Route 24:66		Route 24:67		Route 24:68		Route 24:69		Route 24:70		Route 24:71		Route 24:72	
STEP INITIATION		STEP INITIATION		STEP INITIATION		STEP INITIATION		STEP INITIATION		STEP INITIATION		STEP INITIATION		STEP INITIATION	
Go Mode	Auto	Go Mode	Auto	Go Mode	Auto	Go Mode	Auto	Go Mode	Auto	Go Mode	Auto	Go Mode	Auto	Go Mode	Auto
Radio Input	dio Input 1-	Radio Input	dio Input 1-	Radio Input	dio Input 1-	Radio Input	dio Input 1-	Radio Input	dio Input 1-	Radio Input	dio Input 1-	Radio Input	dio Input 1-	Radio Input	dio Input 1-
Hard Wire Input		Hard Wire Input		Hard Wire Input		Hard Wire Input		Hard Wire Input		Hard Wire Input		Hard Wire Input	N/a	Hard Wire Input	N/a
BIT	N/A	BIT	N/A	BIT	N/A	BIT	N/A	BIT	N/A	BIT	N/A	BIT	N/A	BIT	N/A
STEP ACTION		STEP ACTION		STEP ACTION		STEP ACTION		STEP ACTION		STEP ACTION		STEP ACTION		STEP ACTION	
Function	Rotate	Function	Forward	Function	Rotate	Function	Forward	Function	Rotate	Function	Forward	Function	Rotate	Function	Forward
Speed	33	Speed	33	Speed	33	Speed	33	Speed	33	Speed	33	Speed	33	Speed	33
Navigation	DR	Navigation	DR	Navigation	DR	Navigation	DR	Navigation	DR	Navigation	DR	Navigation	DR	Navigation	DR
Direction	Center	Direction	Center	Direction	Center	Direction	Center	Direction	Center	Direction	Center	Direction	Center	Direction	Center
Size	-90	Size	144	Size	-90	Size	511	Size	-90	Size	2284	Size	90	Size	962
Loss Of Guidance	N/A	Loss Of Guidance	N/A	Loss Of Guidance	N/A	Loss Of Guidance	N/A	Loss Of Guidance	N/A	Loss Of Guidance	N/A	Loss Of Guidance	N/A	Loss Of Guidance	N/A
Obstacle Avoidance	1	Obstacle Avoidance	1	Obstacle Avoidance	1	Obstacle Avoidance	1	Obstacle Avoidance	1	Obstacle Avoidance	1	Obstacle Avoidance	1	Obstacle Avoidance	1
Output		Output		Output		Output		Output		Output		Output	N/a	Output	N/a
END OF STEP		END OF STEP		END OF STEP		END OF STEP		END OF STEP		END OF STEP		END OF STEP		END OF STEP	
END MODE	Distance	END MODE	Distance	END MODE	Distance	END MODE	Distance	END MODE	Distance	END MODE	Distance	END MODE	Distance	END MODE	Distance
END ACTION	Merge	END ACTION	Merge	END ACTION	Merge	END ACTION	Merge	END ACTION	Merge	END ACTION	Merge	END ACTION	Merge	END ACTION	Merge
NEXT ROUTE	24	NEXT ROUTE	24	NEXT ROUTE	24	NEXT ROUTE	24	NEXT ROUTE	24	NEXT ROUTE	24	NEXT ROUTE	24	NEXT ROUTE	24
NEXT STEP	66	NEXT STEP	67	NEXT STEP	68	NEXT STEP	69	NEXT STEP	70	NEXT STEP	71	NEXT STEP	72	NEXT STEP	73

Route 24:73		Route 24:74		Route 24:75		Route 24:76		Route 24:77		Route 24:78		Route 0: 1	
STEP INITIATION		STEP INITIATION		STEP INITIATION		STEP INITIATION		STEP INITIATION		STEP INITIATION		STEP INITIATION	
Go Mode	Auto	Go Mode	Auto	Go Mode	Auto	Go Mode	Auto	Go Mode	Auto	Go Mode	Auto	Go Mode	nput Trigge
Radio Input	dio Input 1-	Radio Input	dio Input 1-	Radio Input	dio Input 1-	Radio Input	dio Input 1-	Radio Input	dio Input 1-	Radio Input	dio Input 1-	Radio Input	dio Input 1-
Hard Wire Input	N/a	Hard Wire Input	N/a	Hard Wire Input	N/a	Hard Wire Input	N/a	Hard Wire Input	N/a	Hard Wire Input	N/a	Hard Wire Input	N/a
BIT	N/A	BIT	N/A	BIT	N/A	BIT	N/A	BIT	N/A	BIT	N/A	BIT	BIT #1-#24
STEP ACTION		STEP ACTION		STEP ACTION		STEP ACTION		STEP ACTION		STEP ACTION		STEP ACTION	
Function	Rotate	Function	Forward	Function	Rotate	Function	Forward	Function	Rotate	Function	Reverse	Function	Auto
Speed	33	Speed	33	Speed	33	Speed	33	Speed	33	Speed	33	Speed	33
Navigation	DR	Navigation	DR	Navigation	DR	Navigation	DR	Navigation	DR	Navigation	DR	Navigation	DR
Direction	Center	Direction	Center	Direction	Center	Direction	Center	Direction	Center	Direction	Center	Direction	Center
Size	-90	Size	525	Size	90	Size	417	Size	-90	Size	66	Size	66
Loss Of Guidance	N/A	Loss Of Guidance	N/A	Loss Of Guidance	N/A	Loss Of Guidance	N/A	Loss Of Guidance	N/A	Loss Of Guidance	N/A	Loss Of Guidance	N/A
Obstacle Avoidance	1	Obstacle Avoidance	1	Obstacle Avoidance	1	Obstacle Avoidance	1	Obstacle Avoidance	1	Obstacle Avoidance	1	Obstacle Avoidance	1
Output	N/a	Output	N/a	Output	N/a	Output	N/a	Output	N/a	Output	N/a	Output	N/a
END OF STEP		END OF STEP		END OF STEP		END OF STEP		END OF STEP		END OF STEP		END OF STEP	
END MODE	Distance	END MODE	Distance	END MODE	Distance	END MODE	Distance	END MODE	Distance	END MODE	Distance	END MODE	Distance
END ACTION	Merge	END ACTION	Merge	END ACTION	Merge	END ACTION	Merge	END ACTION	Merge	END ACTION	Merge	END ACTION	Merge
NEXT ROUTE	24	NEXT ROUTE	24	NEXT ROUTE	24	NEXT ROUTE	24	NEXT ROUTE	24	NEXT ROUTE	0	NEXT ROUTE	0
NEXT STEP	74	NEXT STEP	75	NEXT STEP	76	NEXT STEP	77	NEXT STEP	78	NEXT STEP	1	NEXT STEP	1

Tier 3 Route 25

Route 25:1		Route 25:2		Route 25:3		Route 25:4		Route 25:5		Route 25:6		Route 25:7		Route 25:8	
STEP INITIATION		**STEP INITIATION**		**STEP INITIATION**		**STEP INITIATION**		**STEP INITIATION**		**STEP INITIATION**		**STEP INITIATION**		**STEP INITIATION**	
Go Mode	nput Triggers	**Go Mode**	Auto	**Go Mode**	Auto	**Go Mode**	Auto	**Go Mode**	Auto	**Go Mode**	Auto	**Go Mode**	Auto	**Go Mode**	Auto
Radio Input	adio Input 1-2	**Radio Input**	dio Input 1-	**Radio Input**	dio Input 1-	**Radio Input**	dio Input 1-	**Radio Input**	dio Input 1-	**Radio Input**	dio Input 1-	**Radio Input**	dio Input 1-	**Radio Input**	dio Input 1-
Hard Wire Input	N/A	**Hard Wire Input**	N/A	**Hard Wire Input**	N/A	**Hard Wire Input**	N/A	**Hard Wire Input**	N/A	**Hard Wire Input**	N/A	**Hard Wire Input**	N/A	**Hard Wire Input**	N/A
BIT	Bit #1 off	**BIT**	N/A	**BIT**	N/A	**BIT**	N/A	**BIT**	N/A	**BIT**	N/A	**BIT**	N/A	**BIT**	N/A
Bit#12 On, #20 On	it #5 and 6 Off														
Home Position RFID	it #7 and 9 of														
	t #8 and 10 o														
STEP ACTION		**STEP ACTION**		**STEP ACTION**		**STEP ACTION**		**STEP ACTION**		**STEP ACTION**		**STEP ACTION**		**STEP ACTION**	
Function	Dispatch	**Function**	Forward	**Function**	Rotate	**Function**	Forward	**Function**	Rotate	**Function**	Forward	**Function**	Rotate	**Function**	Forward
Speed	N/A	**Speed**	33	**Speed**	33	**Speed**	33	**Speed**	33	**Speed**	33	**Speed**	33	**Speed**	33
Navigation	N/A	**Navigation**	DR	**Navigation**	DR	**Navigation**	DR	**Navigation**	DR	**Navigation**	DR	**Navigation**	DR	**Navigation**	DR
Direction	N/A	**Direction**	Center	**Direction**	Center	**Direction**	Center	**Direction**	Center	**Direction**	Center	**Direction**	Center	**Direction**	Center
Size	N/A	**Size**	66	**Size**	-90	**Size**	417	**Size**	-90	**Size**	525	**Size**	90	**Size**	962
Loss Of Guidance	N/A	**Loss Of Guidance**	N/A	**Loss Of Guidance**	N/A	**Loss Of Guidance**	N/A	**Loss Of Guidance**	N/A	**Loss Of Guidance**	N/A	**Loss Of Guidance**	N/A	**Loss Of Guidance**	N/A
Obstacle Avoidance	N/A	**Obstacle Avoidance**	1	**Obstacle Avoidance**	1	**Obstacle Avoidance**	1	**Obstacle Avoidance**	1	**Obstacle Avoidance**	1	**Obstacle Avoidance**	1	**Obstacle Avoidance**	1
Output	N/A	**Output**	N/A	**Output**	N/A	**Output**	N/A	**Output**	N/A	**Output**	N/A	**Output**	N/A	**Output**	N/A
END OF STEP		**END OF STEP**		**END OF STEP**		**END OF STEP**		**END OF STEP**		**END OF STEP**		**END OF STEP**		**END OF STEP**	
END MODE	N/A	**END MODE**	Distance	**END MODE**	Distance	**END MODE**	Distance	**END MODE**	Distance	**END MODE**	Distance	**END MODE**	Distance	**END MODE**	Distance
END ACTION	e Bit #12, #2	**END ACTION**	Merge	**END ACTION**	Merge	**END ACTION**	Merge	**END ACTION**	Merge	**END ACTION**	Merge	**END ACTION**	Merge	**END ACTION**	Merge
NEXT ROUTE	25	**NEXT ROUTE**	25	**NEXT ROUTE**	25	**NEXT ROUTE**	25	**NEXT ROUTE**	25	**NEXT ROUTE**	25	**NEXT ROUTE**	25	**NEXT ROUTE**	25
NEXT STEP	**2**	**NEXT STEP**	**3**	**NEXT STEP**	**4**	**NEXT STEP**	**5**	**NEXT STEP**	**6**	**NEXT STEP**	**7**	**NEXT STEP**	**8**	**NEXT STEP**	**9**

Route 25:9		Route 25:10		Route 25:11		Route 25:12		Route 25:13		Route 25:14		Route 25:15		Route 25:16	
STEP INITIATION		**STEP INITIATION**		**STEP INITIATION**		**STEP INITIATION**		**STEP INITIATION**		**STEP INITIATION**		**STEP INITIATION**		**STEP INITIATION**	
Go Mode	Auto	**Go Mode**	Auto	**Go Mode**	Auto	**Go Mode**	Auto	**Go Mode**	Auto	**Go Mode**	Auto	**Go Mode**	Auto	**Go Mode**	Auto
Radio Input	dio Input 1-	**Radio Input**	dio Input 1-	**Radio Input**	dio Input 1-	**Radio Input**	dio Input 1-	**Radio Input**	dio Input 1-	**Radio Input**	dio Input 1-	**Radio Input**	dio Input 1-	**Radio Input**	dio Input 1-
Hard Wire Input	N/A	**Hard Wire Input**	N/A	**Hard Wire Input**	N/A	**Hard Wire Input**	N/A	**Hard Wire Input**	N/A	**Hard Wire Input**	N/A	**Hard Wire Input**	N/A	**Hard Wire Input**	N/A
BIT	N/A	**BIT**	N/A	**BIT**	N/A	**BIT**	N/A	**BIT**	N/A	**BIT**	N/A	**BIT**	N/A	**BIT**	N/A
STEP ACTION		**STEP ACTION**		**STEP ACTION**		**STEP ACTION**		**STEP ACTION**		**STEP ACTION**		**STEP ACTION**		**STEP ACTION**	
Function	Rotate	**Function**	Forward	**Function**	Rotate	**Function**	Forward	**Function**	Rotate	**Function**	Forward	**Function**	Rotate	**Function**	Reverse
Speed	33	**Speed**	33	**Speed**	33	**Speed**	33	**Speed**	33	**Speed**	33	**Speed**	33	**Speed**	33
Navigation	DR	**Navigation**	DR	**Navigation**	DR	**Navigation**	DR	**Navigation**	DR	**Navigation**	DR	**Navigation**	DR	**Navigation**	DR
Direction	Center	**Direction**	Center	**Direction**	Center	**Direction**	Center	**Direction**	Center	**Direction**	Center	**Direction**	Center	**Direction**	Center
Size	-90	**Size**	2284	**Size**	90	**Size**	511	**Size**	90	**Size**	208	**Size**	-90	**Size**	62
Loss Of Guidance	N/A	**Loss Of Guidance**	N/A	**Loss Of Guidance**	N/A	**Loss Of Guidance**	N/A	**Loss Of Guidance**	N/A	**Loss Of Guidance**	N/A	**Loss Of Guidance**	N/A	**Loss Of Guidance**	N/A
Obstacle Avoidance	1	**Obstacle Avoidance**	1	**Obstacle Avoidance**	1	**Obstacle Avoidance**	1	**Obstacle Avoidance**	1	**Obstacle Avoidance**	1	**Obstacle Avoidance**	1	**Obstacle Avoidance**	1
Output	N/A	**Output**	N/A	**Output**	N/A	**Output**	N/A	**Output**	N/A	**Output**	N/A	**Output**	N/A	**Output**	#6 Pin Up
END OF STEP		**END OF STEP**		**END OF STEP**		**END OF STEP**		**END OF STEP**		**END OF STEP**		**END OF STEP**		**END OF STEP**	
END MODE	Distance	**END MODE**	Distance	**END MODE**	Distance	**END MODE**	Distance	**END MODE**	Distance	**END MODE**	Distance	**END MODE**	Distance	**END MODE**	Distance
END ACTION	Merge	**END ACTION**	Merge	**END ACTION**	Merge	**END ACTION**	Merge	**END ACTION**	Merge	**END ACTION**	Merge	**END ACTION**	Merge	**END ACTION**	Merge
NEXT ROUTE	25	**NEXT ROUTE**	25	**NEXT ROUTE**	25	**NEXT ROUTE**	25	**NEXT ROUTE**	25	**NEXT ROUTE**	25	**NEXT ROUTE**	25	**NEXT ROUTE**	25
NEXT STEP	**10**	**NEXT STEP**	**11**	**NEXT STEP**	**12**	**NEXT STEP**	**13**	**NEXT STEP**	**14**	**NEXT STEP**	**15**	**NEXT STEP**	**16**	**NEXT STEP**	**17**

Route 25:17		Route 25:18		Route 25:19		Route 25:20		Route 25:21		Route 25:22		Route 25:23		Route 25:24	
STEP INITIATION		**STEP INITIATION**		**STEP INITIATION**		**STEP INITIATION**		**STEP INITIATION**		**STEP INITIATION**		**STEP INITIATION**		**STEP INITIATION**	
Go Mode	Auto	**Go Mode**	Auto	**Go Mode**	Auto	**Go Mode**	Auto	**Go Mode**	Auto	**Go Mode**	Auto	**Go Mode**	Auto	**Go Mode**	Auto
Radio Input	dio Input 1-	**Radio Input**	dio Input 1-	**Radio Input**	dio Input 1-	**Radio Input**	dio Input 1-	**Radio Input**	dio Input 1-	**Radio Input**	dio Input 1-	**Radio Input**	dio Input 1-	**Radio Input**	dio Input 1-
Hard Wire Input	N/A	**Hard Wire Input**	N/A	**Hard Wire Input**	N/A	**Hard Wire Input**	N/A	**Hard Wire Input**	N/A	**Hard Wire Input**	N/A	**Hard Wire Input**	N/A	**Hard Wire Input**	N/A
BIT	N/A	**BIT**	N/A	**BIT**	N/A	**BIT**	N/A	**BIT**	N/A	**BIT**	N/A	**BIT**	N/A	**BIT**	N/A
STEP ACTION		**STEP ACTION**		**STEP ACTION**		**STEP ACTION**		**STEP ACTION**		**EP ACTION**		**STEP ACTION**		**STEP ACTION**	
Function	Forward	**Function**	Rotate	**Function**	Forward	**Function**	Rotate	**Function**	Forward	**Function**	Rotate	**Function**	Forward	**Function**	Rotate
Speed	33	**Speed**	33	**Speed**	33	**Speed**	33	**Speed**	33	**Speed**	33	**Speed**	33	**Speed**	33
Navigation	DR	**Navigation**	DR	**Navigation**	DR	**Navigation**	DR	**Navigation**	DR	**Navigation**	DR	**Navigation**	DR	**Navigation**	DR
Direction	Center	**Direction**	Center	**Direction**	Center	**Direction**	Center	**Direction**	Center	**Direction**	Center	**Direction**	Center	**Direction**	Center
Size	62	**Size**	-90	**Size**	208	**Size**	-90	**Size**	511	**Size**	-90	**Size**	2284	**Size**	90
Loss Of Guidance	N/A	**Loss Of Guidance**	N/A	**Loss Of Guidance**	N/A	**Loss Of Guidance**	N/A	**Loss Of Guidance**	N/A	**Loss Of Guidance**	N/A	**Loss Of Guidance**	N/A	**Loss Of Guidance**	N/A
Obstacle Avoidance	1	**Obstacle Avoidance**	1	**Obstacle Avoidance**	1	**Obstacle Avoidance**	1	**Obstacle Avoidance**	1	**Obstacle Avoidance**	1	**Obstacle Avoidance**	1	**Obstacle Avoidance**	1
Output	N/A	**Output**	N/A	**Output**	N/A	**Output**	N/A	**Output**	N/A	**Output**	N/A	**Output**	N/A	**Output**	N/A
END OF STEP		**END OF STEP**		**END OF STEP**		**END OF STEP**		**END OF STEP**		**ID OF STEP**		**END OF STEP**		**END OF STEP**	
END MODE	Distance	**END MODE**	Distance	**END MODE**	Distance	**END MODE**	Distance	**END MODE**	Distance	**END MODE**	Distance	**END MODE**	Distance	**END MODE**	Distance
END ACTION	Merge	**END ACTION**	Merge	**END ACTION**	Merge	**END ACTION**	Merge	**END ACTION**	Merge	**END ACTION**	Merge	**END ACTION**	Merge	**END ACTION**	Merge
NEXT ROUTE	25	**NEXT ROUTE**	25	**NEXT ROUTE**	25	**NEXT ROUTE**	25	**NEXT ROUTE**	25	**NEXT ROUTE**	25	**NEXT ROUTE**	25	**NEXT ROUTE**	25
NEXT STEP	**18**	**NEXT STEP**	**19**	**NEXT STEP**	**20**	**NEXT STEP**	**21**	**NEXT STEP**	**22**	**NEXT STEP**	**23**	**NEXT STEP**	**24**	**NEXT STEP**	**25**

Route 25:25		Route 25:26		Route 25:27		Route 25:28		Route 25:29		Route 25:30		Route 25:31		Route 25:32	
STEP INITIATION		**STEP INITIATION**		**STEP INITIATION**		**STEP INITIATION**		**STEP INITIATION**		**STEP INITIATION**		**STEP INITIATION**		**STEP INITIATION**	
Go Mode	Auto	**Go Mode**	Auto	**Go Mode**	Auto	**Go Mode**	Auto	**Go Mode**	Auto	**Go Mode**	Auto	**Go Mode**	Auto	**Go Mode**	Auto
Radio Input	dio Input 1-	**Radio Input**	dio Input 1-	**Radio Input**	dio Input 1-	**Radio Input**	dio Input 1-	**Radio Input**	dio Input 1-	**Radio Input**	dio Input 1-	**Radio Input**	dio Input 1-	**Radio Input**	dio Input 1-
Hard Wire Input	N/A	**Hard Wire Input**	N/A	**Hard Wire Input**	N/A	**Hard Wire Input**	N/A	**Hard Wire Input**	N/A	**Hard Wire Input**	N/A	**Hard Wire Input**	N/A	**Hard Wire Input**	Cart prese
BIT	N/A	**BIT**	N/A	**BIT**	N/A	**BIT**	N/A	**BIT**	N/A	**BIT**	N/A	**BIT**	N/A	**BIT**	N/A
STEP ACTION		**STEP ACTION**		**STEP ACTION**		**STEP ACTION**		**STEP ACTION**		**STEP ACTION**		**STEP ACTION**		**STEP ACTION**	
Function	Forward	**Function**	Rotate	**Function**	Reverse	**Function**	Delay	**Function**	Forward	**Function**	Rotate	**Function**	Reverse	**Function**	Forward
Speed	33	**Speed**	33	**Speed**	33	**Speed**	33	**Speed**	33	**Speed**	33	**Speed**	33	**Speed**	33
Navigation	DR	**Navigation**	DR	**Navigation**	DR	**Navigation**	DR	**Navigation**	DR	**Navigation**	DR	**Navigation**	DR	**Navigation**	DR
Direction	Center	**Direction**	Center	**Direction**	Center	**Direction**	Center	**Direction**	Center	**Direction**	Center	**Direction**	Center	**Direction**	Center
Size	1240	**Size**	90	**Size**	279	**Size**	5	**Size**	164	**Size**	-90	**Size**	102	**Size**	102
Loss Of Guidance	N/A	**Loss Of Guidance**	N/A	**Loss Of Guidance**	N/A	**Loss Of Guidance**	N/A	**Loss Of Guidance**	N/A	**Loss Of Guidance**	N/A	**Loss Of Guidance**	N/A	**Loss Of Guidance**	N/A
Obstacle Avoidance	1	**Obstacle Avoidance**	1	**Obstacle Avoidance**	1	**Obstacle Avoidance**	1	**Obstacle Avoidance**	1	**Obstacle Avoidance**	1	**Obstacle Avoidance**	1	**Obstacle Avoidance**	1
Output	N/A	**Output**	N/A	**Output**	N/A	**Output**	#7 Pin Drop	**Output**		**Output**		**Output**	#6 pin up	**Output**	N/a
END OF STEP		**END OF STEP**		**END OF STEP**		**END OF STEP**		**END OF STEP**		**END OF STEP**		**END OF STEP**		**END OF STEP**	
END MODE	Distance	**END MODE**	Distance	**END MODE**	Distance	**END MODE**	time	**END MODE**	Distance	**END MODE**	Distance	**END MODE**	Distance	**END MODE**	Distance
END ACTION	Merge	**END ACTION**	Merge	**END ACTION**	Merge	**END ACTION**	Merge	**END ACTION**	Merge	**END ACTION**	Merge	**END ACTION**	Merge	**END ACTION**	Merge
NEXT ROUTE	25	**NEXT ROUTE**	25	**NEXT ROUTE**	25	**NEXT ROUTE**	25	**NEXT ROUTE**	25	**NEXT ROUTE**	25	**NEXT ROUTE**	25	**NEXT ROUTE**	25
NEXT STEP	**26**	**NEXT STEP**	**27**	**NEXT STEP**	**28**	**NEXT STEP**	**29**	**NEXT STEP**	**30**	**NEXT STEP**	**31**	**NEXT STEP**	**32**	**NEXT STEP**	**33**

Route 25:33		Route 25:34		Route 25:35		Route 25:36		Route 25:37		Route 25:38		Route 25:39		Route 25:40	
STEP INITIATION		STEP INITIATION		STEP INITIATION		STEP INITIATION		STEP INITIATION		STEP INITIATION		STEP INITIATION		STEP INITIATION	
Go Mode	Auto	Go Mode	Auto	Go Mode	Auto	Go Mode	Auto	Go Mode	Auto	Go Mode	Auto	Go Mode	Auto	Go Mode	Auto
Radio Input	dio Input 1-	Radio Input	dio Input 1-	Radio Input	dio Input 1-	Radio Input	dio Input 1-	Radio Input	dio Input 1-	Radio Input	dio Input 1-	Radio Input	dio Input 1-	Radio Input	dio Input 1-
Hard Wire Input	N/A	Hard Wire Input	N/A	Hard Wire Input	N/A	Hard Wire Input	N/A	Hard Wire Input	N/A	Hard Wire Input	N/A	Hard Wire Input	N/A	Hard Wire Input	N/A
BIT	N/A	BIT	N/A	BIT	N/A	BIT	N/A	BIT	N/A	BIT	N/A	BIT	N/A	BIT	N/A
STEP ACTION		STEP ACTION		STEP ACTION		STEP ACTION		STEP ACTION		STEP ACTION		STEP ACTION		STEP ACTION	
Function	Rotate	Function	Reverse	Function	Rotate	Function	Reverse	Function	Delay	Function	Forward	Function	Rotate	Function	Reverse
Speed	33	Speed	33	Speed	33	Speed	33	Speed	33	Speed	33	Speed	33	Speed	33
Navigation	DR	Navigation	DR	Navigation	DR	Navigation	DR	Navigation	DR	Navigation	DR	Navigation	DR	Navigation	DR
Direction	Center	Direction	Center	Direction	Center	Direction	Center	Direction	Center	Direction	Center	Direction	Center	Direction	Center
Size	90	Size	60	Size	-45	Size	99	Size	5	Size	99	Size	45	Size	104
Loss Of Guidance	N/A	Loss Of Guidance	N/A	Loss Of Guidance	N/A	Loss Of Guidance	N/A	Loss Of Guidance	N/A	Loss Of Guidance	N/A	Loss Of Guidance	N/A	Loss Of Guidance	N/A
Obstacle Avoidance	1	Obstacle Avoidance	1	Obstacle Avoidance	1	Obstacle Avoidance	1	Obstacle Avoidance	1	Obstacle Avoidance	1	Obstacle Avoidance	1	Obstacle Avoidance	1
Output	N/a	Output	N/a	Output	N/a	Output	N/a	Output	#7 pin drop	Output	N/a	Output	N/a	Output	#7 pin raise
END OF STEP		END OF STEP		END OF STEP		END OF STEP		END OF STEP		END OF STEP		END OF STEP		END OF STEP	
END MODE	Distance	END MODE	Distance	END MODE	Distance	END MODE	Distance	END MODE	time	END MODE	Distance	END MODE	Distance	END MODE	Distance
END ACTION	Merge	END ACTION	Merge	END ACTION	Merge	END ACTION	Merge	END ACTION	Merge	END ACTION	Merge	END ACTION	Merge	END ACTION	Merge
NEXT ROUTE	25	NEXT ROUTE	25	NEXT ROUTE	25	NEXT ROUTE	25	NEXT ROUTE	25	NEXT ROUTE	25	NEXT ROUTE	25	NEXT ROUTE	25
NEXT STEP	34	NEXT STEP	35	NEXT STEP	36	NEXT STEP	37	NEXT STEP	38	NEXT STEP	39	NEXT STEP	40	NEXT STEP	41

Route 25:41		Route 25:42		Route 25:43		Route 25:44		Route 25:45		Route 25:46		Route 25:47		Route 25:48	
STEP INITIATION		STEP INITIATION		STEP INITIATION		STEP INITIATION		STEP INITIATION		STEP INITIATION		STEP INITIATION		STEP INITIATION	
Go Mode	Auto	Go Mode	Auto	Go Mode	Auto	Go Mode	Auto	Go Mode	Auto	Go Mode	Auto	Go Mode	Auto	Go Mode	Auto
Radio Input	dio Input 1-	Radio Input	dio Input 1-	Radio Input	dio Input 1-	Radio Input	dio Input 1-	Radio Input	dio Input 1-	Radio Input	dio Input 1-	Radio Input	dio Input 1-	Radio Input	dio Input 1-
Hard Wire Input	N/A	Hard Wire Input	N/A	Hard Wire Input	N/A	Hard Wire Input	N/A	Hard Wire Input	N/A	Hard Wire Input	N/A	Hard Wire Input	N/A	Hard Wire Input	N/A
BIT	N/A	BIT	N/A	BIT	N/A	BIT	N/A	BIT	N/A	BIT	N/A	BIT	N/A	BIT	N/A
STEP ACTION		STEP ACTION		STEP ACTION		STEP ACTION		STEP ACTION		STEP ACTION		STEP ACTION		STEP ACTION	
Function	Forward	Function	Rotate	Function	Reverse	Function	Delay	Function	Forward	Function	Rotate	Function	Reverse	Function	Rotate
Speed	33	Speed	33	Speed	33	Speed	33	Speed	33	Speed	33	Speed	33	Speed	33
Navigation	DR	Navigation	DR	Navigation	DR	Navigation	DR	Navigation	DR	Navigation	DR	Navigation	DR	Navigation	DR
Direction	Center	Direction	Center	Direction	Center	Direction	Center	Direction	Center	Direction	Center	Direction	Center	Direction	Center
Size	164	Size	-90	Size	102	Size	5	Size	102	Size	90	Size	60	Size	-45
Loss Of Guidance	N/A	Loss Of Guidance	N/A	Loss Of Guidance	N/A	Loss Of Guidance	N/A	Loss Of Guidance	N/A	Loss Of Guidance	N/A	Loss Of Guidance	N/A	Loss Of Guidance	N/A
Obstacle Avoidance	1	Obstacle Avoidance	1	Obstacle Avoidance	1	Obstacle Avoidance	1	Obstacle Avoidance	1	Obstacle Avoidance	1	Obstacle Avoidance	1	Obstacle Avoidance	1
Output	N/A	Output	N/A	Output	N/A	Output	#7 Pin Drop	Output	N/a	Output	N/a	Output	N/a	Output	N/a
END OF STEP		END OF STEP		END OF STEP		END OF STEP		END OF STEP		END OF STEP		END OF STEP		END OF STEP	
END MODE	Distance	END MODE	Distance	END MODE	Distance	END MODE	Time	END MODE	Distance	END MODE	Distance	END MODE	Distance	END MODE	Distance
END ACTION	Merge	END ACTION	Merge	END ACTION	Merge	END ACTION	Merge	END ACTION	Merge	END ACTION	Merge	END ACTION	Merge	END ACTION	Merge
NEXT ROUTE	25	NEXT ROUTE	25	NEXT ROUTE	25	NEXT ROUTE	25	NEXT ROUTE	25	NEXT ROUTE	25	NEXT ROUTE	25	NEXT ROUTE	25
NEXT STEP	42	NEXT STEP	43	NEXT STEP	44	NEXT STEP	45	NEXT STEP	46	NEXT STEP	47	NEXT STEP	48	NEXT STEP	49

Route 25:49		Route 25:50		Route 25:51		Route 25:52		Route 25:53		Route 25:54		Route 25:55		Route 25:56	
STEP INITIATION		STEP INITIATION		STEP INITIATION		STEP INITIATION		STEP INITIATION		STEP INITIATION		STEP INITIATION		STEP INITIATION	
Go Mode	Auto	Go Mode	Auto	Go Mode	Auto	Go Mode	Auto	Go Mode	Auto	Go Mode	Auto	Go Mode	Auto	Go Mode	Auto
Radio Input	dio Input 1-	Radio Input	dio Input 1-	Radio Input	dio Input 1-	Radio Input	dio Input 1-	Radio Input	dio Input 1-	Radio Input	dio Input 1-	Radio Input	dio Input 1-	Radio Input	dio Input 1-
Hard Wire Input	N/A	Hard Wire Input	Cart Prese	Hard Wire Input		Hard Wire Input		Hard Wire Input		Hard Wire Input		Hard Wire Input		Hard Wire Input	
BIT	N/A	BIT	N/A	BIT	N/A	BIT	N/A	BIT	N/A	BIT	N/A	BIT	N/A	BIT	N/A
STEP ACTION		STEP ACTION		STEP ACTION		STEP ACTION		STEP ACTION		STEP ACTION		STEP ACTION		STEP ACTION	
Function	Reverse	Function	Forward	Function	Rotate	Function	Forward	Function	Rotate	Function	Forward	Function	Rotate	Function	Forward
Speed	33	Speed	33	Speed	33	Speed	33	Speed	33	Speed	33	Speed	33	Speed	33
Navigation	DR	Navigation	DR	Navigation	DR	Navigation	DR	Navigation	DR	Navigation	DR	Navigation	DR	Navigation	DR
Direction	Center	Direction	Center	Direction	Center	Direction	Center	Direction	Center	Direction	Center	Direction	Center	Direction	Center
Size	99	Size	99	Size	45	Size	174	Size	90	Size	1240	Size	-90	Size	2284
Loss Of Guidance	N/A	Loss Of Guidance	N/A	Loss Of Guidance	N/A	Loss Of Guidance	N/A	Loss Of Guidance	N/A	Loss Of Guidance	N/A	Loss Of Guidance	N/A	Loss Of Guidance	N/A
Obstacle Avoidance	1	Obstacle Avoidance	1	Obstacle Avoidance	1	Obstacle Avoidance	1	Obstacle Avoidance	1	Obstacle Avoidance	1	Obstacle Avoidance	1	Obstacle Avoidance	1
Output	J6 Pin Raise	Output	N/a	Output	N/a	Output	N/a	Output	N/a	Output	N/a	Output	N/a	Output	N/a
END OF STEP		END OF STEP		END OF STEP		END OF STEP		END OF STEP		END OF STEP		END OF STEP		END OF STEP	
END MODE	Distance	END MODE	Distance	END MODE	Distance	END MODE	Distance	END MODE	Distance	END MODE	Distance	END MODE	Distance	END MODE	Distance
END ACTION	Merge	END ACTION	Merge	END ACTION	Merge	END ACTION	Merge	END ACTION	Merge	END ACTION	Merge	END ACTION	Merge	END ACTION	Merge
NEXT ROUTE	25	NEXT ROUTE	25	NEXT ROUTE	25	NEXT ROUTE	25	NEXT ROUTE	25	NEXT ROUTE	25	NEXT ROUTE	25	NEXT ROUTE	25
NEXT STEP	50	NEXT STEP	51	NEXT STEP	52	NEXT STEP	53	NEXT STEP	54	NEXT STEP	55	NEXT STEP	56	NEXT STEP	57

Route 25:57		Route 25:58		Route 25:59		Route 25:60		Route 25:61		Route 25:62		Route 25:63		Route 25:64	
STEP INITIATION		STEP INITIATION		STEP INITIATION		STEP INITIATION		STEP INITIATION		STEP INITIATION		STEP INITIATION		STEP INITIATION	
Go Mode	Auto	Go Mode	Auto	Go Mode	Auto	Go Mode	Auto	Go Mode	Auto	Go Mode	Auto	Go Mode	Auto	Go Mode	Auto
Radio Input	dio Input 1-	Radio Input	dio Input 1-	Radio Input	dio Input 1-	Radio Input	dio Input 1-	Radio Input	dio Input 1-	Radio Input	dio Input 1-	Radio Input	dio Input 1-	Radio Input	dio Input 1-
Hard Wire Input		Hard Wire Input		Hard Wire Input		Hard Wire Input		Hard Wire Input		Hard Wire Input		Hard Wire Input		Hard Wire Input	
BIT	N/A	BIT	N/A	BIT	N/A	BIT	N/A	BIT	N/A	BIT	N/A	BIT	N/A	BIT	N/A
STEP ACTION		STEP ACTION		STEP ACTION		STEP ACTION		STEP ACTION		STEP ACTION		STEP ACTION		STEP ACTION	
Function	Rotate	Function	Forward	Function	Rotate	Function	Forward	Function	Rotate	Function	Reverse	Function	Dellay	Function	Forward
Speed	33	Speed	33	Speed	33	Speed	33	Speed	33	Speed	33	Speed	33	Speed	33
Navigation	DR	Navigation	DR	Navigation	DR	Navigation	DR	Navigation	DR	Navigation	DR	Navigation	DR	Navigation	DR
Direction	Center	Direction	Center	Direction	Center	Direction	Center	Direction	Center	Direction	Center	Direction	Center	Direction	Center
Size	90	Size	511	Size	90	Size	208	Size	-90	Size	62	Size	5	Size	62
Loss Of Guidance	N/A	Loss Of Guidance	N/A	Loss Of Guidance	N/A	Loss Of Guidance	N/A	Loss Of Guidance	N/A	Loss Of Guidance	N/A	Loss Of Guidance	N/A	Loss Of Guidance	N/A
Obstacle Avoidance	1	Obstacle Avoidance	1	Obstacle Avoidance	1	Obstacle Avoidance	1	Obstacle Avoidance	1	Obstacle Avoidance	1	Obstacle Avoidance	1	Obstacle Avoidance	1
Output	N/a	Output	N/a	Output	N/a	Output	N/a	Output	N/a	Output	N/a	Output	#7 Pin Drop	Output	
END OF STEP		END OF STEP		END OF STEP		END OF STEP		END OF STEP		END OF STEP		END OF STEP		END OF STEP	
END MODE	Distance	END MODE	Distance	END MODE	Distance	END MODE	Distance	END MODE	Distance	END MODE	Distance	END MODE	time	END MODE	Distance
END ACTION	Merge	END ACTION	Merge	END ACTION	Merge	END ACTION	Merge	END ACTION	Merge	END ACTION	Merge	END ACTION	Merge	END ACTION	Merge
NEXT ROUTE	25	NEXT ROUTE	25	NEXT ROUTE	25	NEXT ROUTE	25	NEXT ROUTE	25	NEXT ROUTE	25	NEXT ROUTE	25	NEXT ROUTE	25
NEXT STEP	58	NEXT STEP	59	NEXT STEP	60	NEXT STEP	61	NEXT STEP	62	NEXT STEP	63	NEXT STEP	64	NEXT STEP	65

Route 25:65		Route 25:66		Route 25:67		Route 25:68		Route 25:69		Route 25:70		Route 25:71		Route 25:72	
STEP INITIATION		STEP INITIATION		STEP INITIATION		STEP INITIATION		STEP INITIATION		STEP INITIATION		STEP INITIATION		STEP INITIATION	
Go Mode	Auto	Go Mode	Auto	Go Mode	Auto	Go Mode	Auto	Go Mode	Auto	Go Mode	Auto	Go Mode	Auto	Go Mode	Auto
Radio Input	dio Input 1-	Radio Input	dio Input 1-	Radio Input	dio Input 1-	Radio Input	dio Input 1-	Radio Input	dio Input 1-	Radio Input	dio Input 1-	Radio Input	dio Input 1-	Radio Input	dio Input 1-
Hard Wire Input		Hard Wire Input		Hard Wire Input		Hard Wire Input		Hard Wire Input		Hard Wire Input		Hard Wire Input	N/a	Hard Wire Input	N/a
BIT	N/A	BIT	N/A	BIT	N/A	BIT	N/A	BIT	N/A	BIT	N/A	BIT	N/A	BIT	N/A
STEP ACTION		STEP ACTION		STEP ACTION		STEP ACTION		STEP ACTION		STEP ACTION		STEP ACTION		STEP ACTION	
Function	Rotate	Function	Forward	Function	Rotate	Function	Forward	Function	Rotate	Function	Forward	Function	Rotate	Function	Forward
Speed	33	Speed	33	Speed	33	Speed	33	Speed	33	Speed	33	Speed	33	Speed	33
Navigation	DR	Navigation	DR	Navigation	DR	Navigation	DR	Navigation	DR	Navigation	DR	Navigation	DR	Navigation	DR
Direction	Center	Direction	Center	Direction	Center	Direction	Center	Direction	Center	Direction	Center	Direction	Center	Direction	Center
Size	-90	Size	208	Size	-90	Size	511	Size	-90	Size	2284	Size	90	Size	962
Loss Of Guidance	N/A	Loss Of Guidance	N/A	Loss Of Guidance	N/A	Loss Of Guidance	N/A	Loss Of Guidance	N/A	Loss Of Guidance	N/A	Loss Of Guidance	N/A	Loss Of Guidance	N/A
Obstacle Avoidance	1	Obstacle Avoidance	1	Obstacle Avoidance	1	Obstacle Avoidance	1	Obstacle Avoidance	1	Obstacle Avoidance	1	Obstacle Avoidance	1	Obstacle Avoidance	1
Output		Output		Output		Output		Output		Output		Output	N/a	Output	N/a
END OF STEP		END OF STEP		END OF STEP		END OF STEP		END OF STEP		END OF STEP		END OF STEP		END OF STEP	
END MODE	Distance	END MODE	Distance	END MODE	Distance	END MODE	Distance	END MODE	Distance	END MODE	Distance	END MODE	Distance	END MODE	Distance
END ACTION	Merge	END ACTION	Merge	END ACTION	Merge	END ACTION	Merge	END ACTION	Merge	END ACTION	Merge	END ACTION	Merge	END ACTION	Merge
NEXT ROUTE	25	NEXT ROUTE	25	NEXT ROUTE	25	NEXT ROUTE	25	NEXT ROUTE	25	NEXT ROUTE	25	NEXT ROUTE	25	NEXT ROUTE	25
NEXT STEP	66	NEXT STEP	67	NEXT STEP	68	NEXT STEP	69	NEXT STEP	70	NEXT STEP	71	NEXT STEP	72	NEXT STEP	73

Route 25:73		Route 25:74		Route 25:75		Route 25:76		Route 25:77		Route 25:78		Route 0: 1	
STEP INITIATION		STEP INITIATION		STEP INITIATION		STEP INITIATION		STEP INITIATION		STEP INITIATION		STEP INITIATION	
Go Mode	Auto	Go Mode	Auto	Go Mode	Auto	Go Mode	Auto	Go Mode	Auto	Go Mode	Auto	Go Mode	nput Trigge
Radio Input	dio Input 1-	Radio Input	dio Input 1-	Radio Input	dio Input 1-	Radio Input	dio Input 1-	Radio Input	dio Input 1-	Radio Input	dio Input 1-	Radio Input	dio Input 1-
Hard Wire Input	N/a	Hard Wire Input	N/a	Hard Wire Input	N/a	Hard Wire Input	N/a	Hard Wire Input	N/a	Hard Wire Input	N/a	Hard Wire Input	N/a
BIT	N/A	BIT	N/A	BIT	N/A	BIT	N/A	BIT	N/A	BIT	N/A	BIT	BIT #1-#24
STEP ACTION		STEP ACTION		STEP ACTION		STEP ACTION		STEP ACTION		STEP ACTION		STEP ACTION	
Function	Rotate	Function	Forward	Function	Rotate	Function	Forward	Function	Rotate	Function	Reverse	Function	Auto
Speed	33	Speed	33	Speed	33	Speed	33	Speed	33	Speed	33	Speed	33
Navigation	DR	Navigation	DR	Navigation	DR	Navigation	DR	Navigation	DR	Navigation	DR	Navigation	DR
Direction	Center	Direction	Center	Direction	Center	Direction	Center	Direction	Center	Direction	Center	Direction	Center
Size	-90	Size	525	Size	90	Size	417	Size	-90	Size	66	Size	66
Loss Of Guidance	N/A	Loss Of Guidance	N/A	Loss Of Guidance	N/A	Loss Of Guidance	N/A	Loss Of Guidance	N/A	Loss Of Guidance	N/A	Loss Of Guidance	N/A
Obstacle Avoidance	1	Obstacle Avoidance	1	Obstacle Avoidance	1	Obstacle Avoidance	1	Obstacle Avoidance	1	Obstacle Avoidance	1	Obstacle Avoidance	1
Output	N/a	Output	N/a	Output	N/a	Output	N/a	Output	N/a	Output	N/a	Output	N/a
END OF STEP		END OF STEP		END OF STEP		END OF STEP		END OF STEP		END OF STEP		END OF STEP	
END MODE	Distance	END MODE	Distance	END MODE	Distance	END MODE	Distance	END MODE	Distance	END MODE	Distance	END MODE	Distance
END ACTION	Merge	END ACTION	Merge	END ACTION	Merge	END ACTION	Merge	END ACTION	Merge	END ACTION	Merge	END ACTION	Merge
NEXT ROUTE	25	NEXT ROUTE	25	NEXT ROUTE	25	NEXT ROUTE	25	NEXT ROUTE	25	NEXT ROUTE	0	NEXT ROUTE	0
NEXT STEP	74	NEXT STEP	75	NEXT STEP	76	NEXT STEP	77	NEXT STEP	78	NEXT STEP	1	NEXT STEP	1

Tier 3 Route 26

Route 26:1		Route 26:2		Route 26:3		Route 26:4		Route 26:5		Route 26:6		Route 26:7		Route 26:8	
STEP INITIATION		**STEP INITIATION**		**STEP INITIATION**		**STEP INITIATION**		**STEP INITIATION**		**STEP INITIATION**		**STEP INITIATION**		**STEP INITIATION**	
Go Mode	nput Triggers	**Go Mode**	Auto	**Go Mode**	Auto	**Go Mode**	Auto	**Go Mode**	Auto	**Go Mode**	Auto	**Go Mode**	Auto	**Go Mode**	Auto
Radio Input	adio Input 1-2	**Radio Input**	dio Input 1-	**Radio Input**	dio Input 1-	**Radio Input**	dio Input 1-	**Radio Input**	dio Input 1-	**Radio Input**	dio Input 1-	**Radio Input**	dio Input 1-	**Radio Input**	dio Input 1-
Hard Wire Input	N/A	**Hard Wire Input**	N/A	**Hard Wire Input**	N/A	**Hard Wire Input**	N/A	**Hard Wire Input**	N/A	**Hard Wire Input**	N/A	**Hard Wire Input**	N/A	**Hard Wire Input**	N/A
BIT	Bit #1 off	**BIT**	N/A	**BIT**	N/A	**BIT**	N/A	**BIT**	N/A	**BIT**	N/A	**BIT**	N/A	**BIT**	N/A
Bit#12 On, #21 On	it #5 and 6 Off														
Home Position RFID	it #7 and 9 of														
	t #8 and 10 o														
STEP ACTION		**STEP ACTION**		**STEP ACTION**		**STEP ACTION**		**STEP ACTION**		**STEP ACTION**		**STEP ACTION**		**STEP ACTION**	
Function	Dispatch	**Function**	Forward	**Function**	Rotate	**Function**	Forward	**Function**	Rotate	**Function**	Forward	**Function**	Rotate	**Function**	Forward
Speed	N/A	**Speed**	33	**Speed**	33	**Speed**	33	**Speed**	33	**Speed**	33	**Speed**	33	**Speed**	33
Navigation	N/A	**Navigation**	DR	**Navigation**	DR	**Navigation**	DR	**Navigation**	DR	**Navigation**	DR	**Navigation**	DR	**Navigation**	DR
Direction	N/A	**Direction**	Center	**Direction**	Center	**Direction**	Center	**Direction**	Center	**Direction**	Center	**Direction**	Center	**Direction**	Center
Size	N/A	**Size**	66	**Size**	-90	**Size**	417	**Size**	-90	**Size**	525	**Size**	90	**Size**	962
Loss Of Guidance	N/A	**Loss Of Guidance**	N/A	**Loss Of Guidance**	N/A	**Loss Of Guidance**	N/A	**Loss Of Guidance**	N/A	**Loss Of Guidance**	N/A	**Loss Of Guidance**	N/A	**Loss Of Guidance**	N/A
Obstacle Avoidance	N/A	**Obstacle Avoidance**	1	**Obstacle Avoidance**	1	**Obstacle Avoidance**	1	**Obstacle Avoidance**	1	**Obstacle Avoidance**	1	**Obstacle Avoidance**	1	**Obstacle Avoidance**	1
Output	N/A	**Output**	N/A	**Output**	N/A	**Output**	N/A	**Output**	N/A	**Output**	N/A	**Output**	N/A	**Output**	N/A
END OF STEP		**END OF STEP**		**END OF STEP**		**END OF STEP**		**END OF STEP**		**END OF STEP**		**END OF STEP**		**END OF STEP**	
END MODE	N/A	**END MODE**	Distance	**END MODE**	Distance	**END MODE**	Distance	**END MODE**	Distance	**END MODE**	Distance	**END MODE**	Distance	**END MODE**	Distance
END ACTION	e Bit #12, #2	**END ACTION**	Merge	**END ACTION**	Merge	**END ACTION**	Merge	**END ACTION**	Merge	**END ACTION**	Merge	**END ACTION**	Merge	**END ACTION**	Merge
NEXT ROUTE	26	**NEXT ROUTE**	26	**NEXT ROUTE**	26	**NEXT ROUTE**	26	**NEXT ROUTE**	26	**NEXT ROUTE**	26	**NEXT ROUTE**	26	**NEXT ROUTE**	26
NEXT STEP	**2**	**NEXT STEP**	**3**	**NEXT STEP**	**4**	**NEXT STEP**	**5**	**NEXT STEP**	**6**	**NEXT STEP**	**7**	**NEXT STEP**	**8**	**NEXT STEP**	**9**

Route 26:9		Route 26:10		Route 26:11		Route 26:12		Route 26:13		Route 26:14		Route 26:15		Route 26:16	
STEP INITIATION		**STEP INITIATION**		**STEP INITIATION**		**STEP INITIATION**		**STEP INITIATION**		**STEP INITIATION**		**STEP INITIATION**		**STEP INITIATION**	
Go Mode	Auto	**Go Mode**	Auto	**Go Mode**	Auto	**Go Mode**	Auto	**Go Mode**	Auto	**Go Mode**	Auto	**Go Mode**	Auto	**Go Mode**	Auto
Radio Input	dio Input 1-	**Radio Input**	dio Input 1-	**Radio Input**	dio Input 1-	**Radio Input**	dio Input 1-	**Radio Input**	dio Input 1-	**Radio Input**	dio Input 1-	**Radio Input**	dio Input 1-	**Radio Input**	dio Input 1-
Hard Wire Input	N/A	**Hard Wire Input**	N/A	**Hard Wire Input**	N/A	**Hard Wire Input**	N/A	**Hard Wire Input**	N/A	**Hard Wire Input**	N/A	**Hard Wire Input**	N/A	**Hard Wire Input**	N/A
BIT	N/A	**BIT**	N/A	**BIT**	N/A	**BIT**	N/A	**BIT**	N/A	**BIT**	N/A	**BIT**	N/A	**BIT**	N/A
STEP ACTION		**STEP ACTION**		**STEP ACTION**		**STEP ACTION**		**STEP ACTION**		**STEP ACTION**		**STEP ACTION**		**STEP ACTION**	
Function	Rotate	**Function**	Forward	**Function**	Rotate	**Function**	Forward	**Function**	Rotate	**Function**	Forward	**Function**	Rotate	**Function**	Reverse
Speed	33	**Speed**	33	**Speed**	33	**Speed**	33	**Speed**	33	**Speed**	33	**Speed**	33	**Speed**	33
Navigation	DR	**Navigation**	DR	**Navigation**	DR	**Navigation**	DR	**Navigation**	DR	**Navigation**	DR	**Navigation**	DR	**Navigation**	DR
Direction	Center	**Direction**	Center	**Direction**	Center	**Direction**	Center	**Direction**	Center	**Direction**	Center	**Direction**	Center	**Direction**	Center
Size	-90	**Size**	2284	**Size**	90	**Size**	511	**Size**	90	**Size**	274	**Size**	-90	**Size**	62
Loss Of Guidance	N/A	**Loss Of Guidance**	N/A	**Loss Of Guidance**	N/A	**Loss Of Guidance**	N/A	**Loss Of Guidance**	N/A	**Loss Of Guidance**	N/A	**Loss Of Guidance**	N/A	**Loss Of Guidance**	N/A
Obstacle Avoidance	1	**Obstacle Avoidance**	1	**Obstacle Avoidance**	1	**Obstacle Avoidance**	1	**Obstacle Avoidance**	1	**Obstacle Avoidance**	1	**Obstacle Avoidance**	1	**Obstacle Avoidance**	1
Output	N/A	**Output**	N/A	**Output**	N/A	**Output**	N/A	**Output**	N/A	**Output**	N/A	**Output**	N/A	**Output**	#6 Pin Up
END OF STEP		**END OF STEP**		**END OF STEP**		**END OF STEP**		**END OF STEP**		**END OF STEP**		**END OF STEP**		**END OF STEP**	
END MODE	Distance	**END MODE**	Distance	**END MODE**	Distance	**END MODE**	Distance	**END MODE**	Distance	**END MODE**	Distance	**END MODE**	Distance	**END MODE**	Distance
END ACTION	Merge	**END ACTION**	Merge	**END ACTION**	Merge	**END ACTION**	Merge	**END ACTION**	Merge	**END ACTION**	Merge	**END ACTION**	Merge	**END ACTION**	Merge
NEXT ROUTE	26	**NEXT ROUTE**	26	**NEXT ROUTE**	26	**NEXT ROUTE**	26	**NEXT ROUTE**	26	**NEXT ROUTE**	26	**NEXT ROUTE**	26	**NEXT ROUTE**	26
NEXT STEP	**10**	**NEXT STEP**	**11**	**NEXT STEP**	**12**	**NEXT STEP**	**13**	**NEXT STEP**	**14**	**NEXT STEP**	**15**	**NEXT STEP**	**16**	**NEXT STEP**	**17**

Route 26:17		Route 26:18		Route 26:19		Route 26:20		Route 26:21		Route 26:22		Route 26:23		Route 26:24	
STEP INITIATION		**STEP INITIATION**		**STEP INITIATION**		**STEP INITIATION**		**STEP INITIATION**		**STEP INITIATION**		**STEP INITIATION**		**STEP INITIATION**	
Go Mode	Auto	**Go Mode**	Auto	**Go Mode**	Auto	**Go Mode**	Auto	**Go Mode**	Auto	**Go Mode**	Auto	**Go Mode**	Auto	**Go Mode**	Auto
Radio Input	dio Input 1-	**Radio Input**	dio Input 1-	**Radio Input**	dio Input 1-	**Radio Input**	dio Input 1-	**Radio Input**	dio Input 1-	**Radio Input**	dio Input 1-	**Radio Input**	dio Input 1-	**Radio Input**	dio Input 1-
Hard Wire Input	N/A	**Hard Wire Input**	N/A	**Hard Wire Input**	N/A	**Hard Wire Input**	N/A	**Hard Wire Input**	N/A	**Hard Wire Input**	N/A	**Hard Wire Input**	N/A	**Hard Wire Input**	N/A
BIT	N/A	**BIT**	N/A	**BIT**	N/A	**BIT**	N/A	**BIT**	N/A	**BIT**	N/A	**BIT**	N/A	**BIT**	N/A
STEP ACTION		**STEP ACTION**		**STEP ACTION**		**STEP ACTION**		**STEP ACTION**		**EP ACTION**		**STEP ACTION**		**STEP ACTION**	
Function	Forward	**Function**	Rotate	**Function**	Forward	**Function**	Rotate	**Function**	Forward	**Function**	Rotate	**Function**	Forward	**Function**	Rotate
Speed	33	**Speed**	33	**Speed**	33	**Speed**	33	**Speed**	33	**Speed**	33	**Speed**	33	**Speed**	33
Navigation	DR	**Navigation**	DR	**Navigation**	DR	**Navigation**	DR	**Navigation**	DR	**Navigation**	DR	**Navigation**	DR	**Navigation**	DR
Direction	Center	**Direction**	Center	**Direction**	Center	**Direction**	Center	**Direction**	Center	**Direction**	Center	**Direction**	Center	**Direction**	Center
Size	62	**Size**	-90	**Size**	274	**Size**	-90	**Size**	511	**Size**	-90	**Size**	2284	**Size**	90
Loss Of Guidance	N/A	**Loss Of Guidance**	N/A	**Loss Of Guidance**	N/A	**Loss Of Guidance**	N/A	**Loss Of Guidance**	N/A	**Loss Of Guidance**	N/A	**Loss Of Guidance**	N/A	**Loss Of Guidance**	N/A
Obstacle Avoidance	1	**Obstacle Avoidance**	1	**Obstacle Avoidance**	1	**Obstacle Avoidance**	1	**Obstacle Avoidance**	1	**Obstacle Avoidance**	1	**Obstacle Avoidance**	1	**Obstacle Avoidance**	1
Output	N/A	**Output**	N/A	**Output**	N/A	**Output**	N/A	**Output**	N/A	**Output**	N/A	**Output**	N/A	**Output**	N/A
END OF STEP		**END OF STEP**		**END OF STEP**		**END OF STEP**		**END OF STEP**		**ID OF STEP**		**END OF STEP**		**END OF STEP**	
END MODE	Distance	**END MODE**	Distance	**END MODE**	Distance	**END MODE**	Distance	**END MODE**	Distance	**END MODE**	Distance	**END MODE**	Distance	**END MODE**	Distance
END ACTION	Merge	**END ACTION**	Merge	**END ACTION**	Merge	**END ACTION**	Merge	**END ACTION**	Merge	**END ACTION**	Merge	**END ACTION**	Merge	**END ACTION**	Merge
NEXT ROUTE	26	**NEXT ROUTE**	26	**NEXT ROUTE**	26	**NEXT ROUTE**	26	**NEXT ROUTE**	26	**NEXT ROUTE**	26	**NEXT ROUTE**	26	**NEXT ROUTE**	26
NEXT STEP	**18**	**NEXT STEP**	**19**	**NEXT STEP**	**20**	**NEXT STEP**	**21**	**NEXT STEP**	**22**	**NEXT STEP**	**23**	**NEXT STEP**	**24**	**NEXT STEP**	**25**

Route 26:25		Route 26:26		Route 26:27		Route 26:28		Route 26:29		Route 26:30		Route 26:31		Route 26:32	
STEP INITIATION		**STEP INITIATION**		**STEP INITIATION**		**STEP INITIATION**		**STEP INITIATION**		**STEP INITIATION**		**STEP INITIATION**		**STEP INITIATION**	
Go Mode	Auto	**Go Mode**	Auto	**Go Mode**	Auto	**Go Mode**	Auto	**Go Mode**	Auto	**Go Mode**	Auto	**Go Mode**	Auto	**Go Mode**	Auto
Radio Input	dio Input 1-	**Radio Input**	dio Input 1-	**Radio Input**	dio Input 1-	**Radio Input**	dio Input 1-	**Radio Input**	dio Input 1-	**Radio Input**	dio Input 1-	**Radio Input**	dio Input 1-	**Radio Input**	dio Input 1-
Hard Wire Input	N/A	**Hard Wire Input**	N/A	**Hard Wire Input**	N/A	**Hard Wire Input**	N/A	**Hard Wire Input**	N/A	**Hard Wire Input**	N/A	**Hard Wire Input**	N/A	**Hard Wire Input**	Cart prese
BIT	N/A	**BIT**	N/A	**BIT**	N/A	**BIT**	N/A	**BIT**	N/A	**BIT**	N/A	**BIT**	N/A	**BIT**	N/A
STEP ACTION		**STEP ACTION**		**STEP ACTION**		**STEP ACTION**		**STEP ACTION**		**STEP ACTION**		**STEP ACTION**		**STEP ACTION**	
Function	Forward	**Function**	Rotate	**Function**	Reverse	**Function**	Delay	**Function**	Forward	**Function**	Rotate	**Function**	Reverse	**Function**	Forward
Speed	33	**Speed**	33	**Speed**	33	**Speed**	33	**Speed**	33	**Speed**	33	**Speed**	33	**Speed**	33
Navigation	DR	**Navigation**	DR	**Navigation**	DR	**Navigation**	DR	**Navigation**	DR	**Navigation**	DR	**Navigation**	DR	**Navigation**	DR
Direction	Center	**Direction**	Center	**Direction**	Center	**Direction**	Center	**Direction**	Center	**Direction**	Center	**Direction**	Center	**Direction**	Center
Size	1240	**Size**	90	**Size**	279	**Size**	5	**Size**	164	**Size**	-90	**Size**	102	**Size**	102
Loss Of Guidance	N/A	**Loss Of Guidance**	N/A	**Loss Of Guidance**	N/A	**Loss Of Guidance**	N/A	**Loss Of Guidance**	N/A	**Loss Of Guidance**	N/A	**Loss Of Guidance**	N/A	**Loss Of Guidance**	N/A
Obstacle Avoidance	1	**Obstacle Avoidance**	1	**Obstacle Avoidance**	1	**Obstacle Avoidance**	1	**Obstacle Avoidance**	1	**Obstacle Avoidance**	1	**Obstacle Avoidance**	1	**Obstacle Avoidance**	1
Output	N/A	**Output**	N/A	**Output**	N/A	**Output**	#7 Pin Drop	**Output**		**Output**		**Output**	#6 pin up	**Output**	N/a
END OF STEP		**END OF STEP**		**END OF STEP**		**END OF STEP**		**END OF STEP**		**END OF STEP**		**END OF STEP**		**END OF STEP**	
END MODE	Distance	**END MODE**	Distance	**END MODE**	Distance	**END MODE**	time	**END MODE**	Distance	**END MODE**	Distance	**END MODE**	Distance	**END MODE**	Distance
END ACTION	Merge	**END ACTION**	Merge	**END ACTION**	Merge	**END ACTION**	Merge	**END ACTION**	Merge	**END ACTION**	Merge	**END ACTION**	Merge	**END ACTION**	Merge
NEXT ROUTE	26	**NEXT ROUTE**	26	**NEXT ROUTE**	26	**NEXT ROUTE**	26	**NEXT ROUTE**	26	**NEXT ROUTE**	26	**NEXT ROUTE**	26	**NEXT ROUTE**	26
NEXT STEP	**26**	**NEXT STEP**	**27**	**NEXT STEP**	**28**	**NEXT STEP**	**29**	**NEXT STEP**	**30**	**NEXT STEP**	**31**	**NEXT STEP**	**32**	**NEXT STEP**	**33**

Route 26:33		Route 26:34		Route 26:35		Route 26:36		Route 26:37		Route 26:38		Route 26:39		Route 26:40	
STEP INITIATION		STEP INITIATION		STEP INITIATION		STEP INITIATION		STEP INITIATION		STEP INITIATION		STEP INITIATION		STEP INITIATION	
Go Mode	Auto	Go Mode	Auto	Go Mode	Auto	Go Mode	Auto	Go Mode	Auto	Go Mode	Auto	Go Mode	Auto	Go Mode	Auto
Radio Input	dio Input 1-	Radio Input	dio Input 1-	Radio Input	dio Input 1-	Radio Input	dio Input 1-	Radio Input	dio Input 1-	Radio Input	dio Input 1-	Radio Input	dio Input 1-	Radio Input	dio Input 1-
Hard Wire Input	N/A	Hard Wire Input	N/A	Hard Wire Input	N/A	Hard Wire Input	N/A	Hard Wire Input	N/A	Hard Wire Input	N/A	Hard Wire Input	N/A	Hard Wire Input	N/A
BIT	N/A	BIT	N/A	BIT	N/A	BIT	N/A	BIT	N/A	BIT	N/A	BIT	N/A	BIT	N/A
STEP ACTION		STEP ACTION		STEP ACTION		STEP ACTION		STEP ACTION		STEP ACTION		STEP ACTION		STEP ACTION	
Function	Rotate	Function	Reverse	Function	Rotate	Function	Reverse	Function	Delay	Function	Forward	Function	Rotate	Function	Reverse
Speed	33	Speed	33	Speed	33	Speed	33	Speed	33	Speed	33	Speed	33	Speed	33
Navigation	DR	Navigation	DR	Navigation	DR	Navigation	DR	Navigation	DR	Navigation	DR	Navigation	DR	Navigation	DR
Direction	Center	Direction	Center	Direction	Center	Direction	Center	Direction	Center	Direction	Center	Direction	Center	Direction	Center
Size	90	Size	60	Size	-45	Size	99	Size	5	Size	99	Size	45	Size	104
Loss Of Guidance	N/A	Loss Of Guidance	N/A	Loss Of Guidance	N/A	Loss Of Guidance	N/A	Loss Of Guidance	N/A	Loss Of Guidance	N/A	Loss Of Guidance	N/A	Loss Of Guidance	N/A
Obstacle Avoidance	1	Obstacle Avoidance	1	Obstacle Avoidance	1	Obstacle Avoidance	1	Obstacle Avoidance	1	Obstacle Avoidance	1	Obstacle Avoidance	1	Obstacle Avoidance	1
Output	N/a	Output	N/a	Output	N/a	Output	N/a	Output	#7 pin drop	Output	N/a	Output	N/a	Output	#7 pin raise
END OF STEP		END OF STEP		END OF STEP		END OF STEP		END OF STEP		END OF STEP		END OF STEP		END OF STEP	
END MODE	Distance	END MODE	Distance	END MODE	Distance	END MODE	Distance	END MODE	time	END MODE	Distance	END MODE	Distance	END MODE	Distance
END ACTION	Merge	END ACTION	Merge	END ACTION	Merge	END ACTION	Merge	END ACTION	Merge	END ACTION	Merge	END ACTION	Merge	END ACTION	Merge
NEXT ROUTE	26	NEXT ROUTE	26	NEXT ROUTE	26	NEXT ROUTE	26	NEXT ROUTE	26	NEXT ROUTE	26	NEXT ROUTE	26	NEXT ROUTE	26
NEXT STEP	**34**	NEXT STEP	**35**	NEXT STEP	**36**	NEXT STEP	**37**	NEXT STEP	**38**	NEXT STEP	**39**	NEXT STEP	**40**	NEXT STEP	**41**

Route 26:41		Route 26:42		Route 26:43		Route 26:44		Route 26:45		Route 26:46		Route 26:47		Route 26:48	
STEP INITIATION		STEP INITIATION		STEP INITIATION		STEP INITIATION		STEP INITIATION		STEP INITIATION		STEP INITIATION		STEP INITIATION	
Go Mode	Auto	Go Mode	Auto	Go Mode	Auto	Go Mode	Auto	Go Mode	Auto	Go Mode	Auto	Go Mode	Auto	Go Mode	Auto
Radio Input	dio Input 1-	Radio Input	dio Input 1-	Radio Input	dio Input 1-	Radio Input	dio Input 1-	Radio Input	dio Input 1-	Radio Input	dio Input 1-	Radio Input	dio Input 1-	Radio Input	dio Input 1-
Hard Wire Input	N/A	Hard Wire Input	N/A	Hard Wire Input	N/A	Hard Wire Input	N/A	Hard Wire Input	N/A	Hard Wire Input	N/A	Hard Wire Input	N/A	Hard Wire Input	N/A
BIT	N/A	BIT	N/A	BIT	N/A	BIT	N/A	BIT	N/A	BIT	N/A	BIT	N/A	BIT	N/A
STEP ACTION		STEP ACTION		STEP ACTION		STEP ACTION		STEP ACTION		STEP ACTION		STEP ACTION		STEP ACTION	
Function	Forward	Function	Rotate	Function	Reverse	Function	Delay	Function	Forward	Function	Rotate	Function	Reverse	Function	Rotate
Speed	33	Speed	33	Speed	33	Speed	33	Speed	33	Speed	33	Speed	33	Speed	33
Navigation	DR	Navigation	DR	Navigation	DR	Navigation	DR	Navigation	DR	Navigation	DR	Navigation	DR	Navigation	DR
Direction	Center	Direction	Center	Direction	Center	Direction	Center	Direction	Center	Direction	Center	Direction	Center	Direction	Center
Size	164	Size	-90	Size	102	Size	5	Size	102	Size	90	Size	60	Size	-45
Loss Of Guidance	N/A	Loss Of Guidance	N/A	Loss Of Guidance	N/A	Loss Of Guidance	N/A	Loss Of Guidance	N/A	Loss Of Guidance	N/A	Loss Of Guidance	N/A	Loss Of Guidance	N/A
Obstacle Avoidance	1	Obstacle Avoidance	1	Obstacle Avoidance	1	Obstacle Avoidance	1	Obstacle Avoidance	1	Obstacle Avoidance	1	Obstacle Avoidance	1	Obstacle Avoidance	1
Output	N/A	Output	N/A	Output	N/A	Output	#7 Pin Drop	Output	N/a	Output	N/a	Output	N/a	Output	N/a
END OF STEP		END OF STEP		END OF STEP		END OF STEP		END OF STEP		END OF STEP		END OF STEP		END OF STEP	
END MODE	Distance	END MODE	Distance	END MODE	Distance	END MODE	Time	END MODE	Distance	END MODE	Distance	END MODE	Distance	END MODE	Distance
END ACTION	Merge	END ACTION	Merge	END ACTION	Merge	END ACTION	Merge	END ACTION	Merge	END ACTION	Merge	END ACTION	Merge	END ACTION	Merge
NEXT ROUTE	26	NEXT ROUTE	26	NEXT ROUTE	26	NEXT ROUTE	26	NEXT ROUTE	26	NEXT ROUTE	26	NEXT ROUTE	26	NEXT ROUTE	26
NEXT STEP	**42**	NEXT STEP	**43**	NEXT STEP	**44**	NEXT STEP	**45**	NEXT STEP	**46**	NEXT STEP	**47**	NEXT STEP	**48**	NEXT STEP	**49**

Route 26:49		Route 26:50		Route 26:51		Route 26:52		Route 26:53		Route 26:54		Route 26:55		Route 26:56	
STEP INITIATION		STEP INITIATION		STEP INITIATION		STEP INITIATION		STEP INITIATION		STEP INITIATION		STEP INITIATION		STEP INITIATION	
Go Mode	Auto	Go Mode	Auto	Go Mode	Auto	Go Mode	Auto	Go Mode	Auto	Go Mode	Auto	Go Mode	Auto	Go Mode	Auto
Radio Input	dio Input 1-	Radio Input	dio Input 1-	Radio Input	dio Input 1-	Radio Input	dio Input 1-	Radio Input	dio Input 1-	Radio Input	dio Input 1-	Radio Input	dio Input 1-	Radio Input	dio Input 1-
Hard Wire Input	N/A	Hard Wire Input	Cart Prese	Hard Wire Input		Hard Wire Input		Hard Wire Input		Hard Wire Input		Hard Wire Input		Hard Wire Input	
BIT	N/A	BIT	N/A	BIT	N/A	BIT	N/A	BIT	N/A	BIT	N/A	BIT	N/A	BIT	N/A
STEP ACTION		STEP ACTION		STEP ACTION		STEP ACTION		STEP ACTION		STEP ACTION		STEP ACTION		STEP ACTION	
Function	Reverse	Function	Forward	Function	Rotate	Function	Forward	Function	Rotate	Function	Forward	Function	Rotate	Function	Forward
Speed	33	Speed	33	Speed	33	Speed	33	Speed	33	Speed	33	Speed	33	Speed	33
Navigation	DR	Navigation	DR	Navigation	DR	Navigation	DR	Navigation	DR	Navigation	DR	Navigation	DR	Navigation	DR
Direction	Center	Direction	Center	Direction	Center	Direction	Center	Direction	Center	Direction	Center	Direction	Center	Direction	Center
Size	99	Size	99	Size	45	Size	174	Size	90	Size	1240	Size	-90	Size	2284
Loss Of Guidance	N/A	Loss Of Guidance	N/A	Loss Of Guidance	N/A	Loss Of Guidance	N/A	Loss Of Guidance	N/A	Loss Of Guidance	N/A	Loss Of Guidance	N/A	Loss Of Guidance	N/A
Obstacle Avoidance	1	Obstacle Avoidance	1	Obstacle Avoidance	1	Obstacle Avoidance	1	Obstacle Avoidance	1	Obstacle Avoidance	1	Obstacle Avoidance	1	Obstacle Avoidance	1
Output	#6 Pin Raise	Output	N/a	Output	N/a	Output	N/a	Output	N/a	Output	N/a	Output	N/a	Output	N/a
END OF STEP		END OF STEP		END OF STEP		END OF STEP		END OF STEP		END OF STEP		END OF STEP		END OF STEP	
END MODE	Distance	END MODE	Distance	END MODE	Distance	END MODE	Distance	END MODE	Distance	END MODE	Distance	END MODE	Distance	END MODE	Distance
END ACTION	Merge	END ACTION	Merge	END ACTION	Merge	END ACTION	Merge	END ACTION	Merge	END ACTION	Merge	END ACTION	Merge	END ACTION	Merge
NEXT ROUTE	26	NEXT ROUTE	26	NEXT ROUTE	26	NEXT ROUTE	26	NEXT ROUTE	26	NEXT ROUTE	26	NEXT ROUTE	26	NEXT ROUTE	26
NEXT STEP	**50**	NEXT STEP	**51**	NEXT STEP	**52**	NEXT STEP	**53**	NEXT STEP	**54**	NEXT STEP	**55**	NEXT STEP	**56**	NEXT STEP	**57**

Route 26:57		Route 26:58		Route 26:59		Route 26:60		Route 26:61		Route 26:62		Route 26:63		Route 26:64	
STEP INITIATION		STEP INITIATION		STEP INITIATION		STEP INITIATION		STEP INITIATION		STEP INITIATION		STEP INITIATION		STEP INITIATION	
Go Mode	Auto	Go Mode	Auto	Go Mode	Auto	Go Mode	Auto	Go Mode	Auto	Go Mode	Auto	Go Mode	Auto	Go Mode	Auto
Radio Input	dio Input 1-	Radio Input	dio Input 1-	Radio Input	dio Input 1-	Radio Input	dio Input 1-	Radio Input	dio Input 1-	Radio Input	dio Input 1-	Radio Input	dio Input 1-	Radio Input	dio Input 1-
Hard Wire Input		Hard Wire Input		Hard Wire Input		Hard Wire Input		Hard Wire Input		Hard Wire Input		Hard Wire Input		Hard Wire Input	
BIT	N/A	BIT	N/A	BIT	N/A	BIT	N/A	BIT	N/A	BIT	N/A	BIT	N/A	BIT	N/A
STEP ACTION		STEP ACTION		STEP ACTION		STEP ACTION		STEP ACTION		STEP ACTION		STEP ACTION		STEP ACTION	
Function	Rotate	Function	Forward	Function	Rotate	Function	Forward	Function	Rotate	Function	Reverse	Function	Dellay	Function	Forward
Speed	33	Speed	33	Speed	33	Speed	33	Speed	33	Speed	33	Speed	33	Speed	33
Navigation	DR	Navigation	DR	Navigation	DR	Navigation	DR	Navigation	DR	Navigation	DR	Navigation	DR	Navigation	DR
Direction	Center	Direction	Center	Direction	Center	Direction	Center	Direction	Center	Direction	Center	Direction	Center	Direction	Center
Size	90	Size	511	Size	90	Size	274	Size	-90	Size	62	Size	5	Size	62
Loss Of Guidance	N/A	Loss Of Guidance	N/A	Loss Of Guidance	N/A	Loss Of Guidance	N/A	Loss Of Guidance	N/A	Loss Of Guidance	N/A	Loss Of Guidance	N/A	Loss Of Guidance	N/A
Obstacle Avoidance	1	Obstacle Avoidance	1	Obstacle Avoidance	1	Obstacle Avoidance	1	Obstacle Avoidance	1	Obstacle Avoidance	1	Obstacle Avoidance	1	Obstacle Avoidance	1
Output	N/a	Output	N/a	Output	N/a	Output	N/a	Output	N/a	Output	N/a	Output	#7 Pin Drop	Output	
END OF STEP		END OF STEP		END OF STEP		END OF STEP		END OF STEP		END OF STEP		END OF STEP		END OF STEP	
END MODE	Distance	END MODE	Distance	END MODE	Distance	END MODE	Distance	END MODE	Distance	END MODE	Distance	END MODE	time	END MODE	Distance
END ACTION	Merge	END ACTION	Merge	END ACTION	Merge	END ACTION	Merge	END ACTION	Merge	END ACTION	Merge	END ACTION	Merge	END ACTION	Merge
NEXT ROUTE	26	NEXT ROUTE	26	NEXT ROUTE	26	NEXT ROUTE	26	NEXT ROUTE	26	NEXT ROUTE	26	NEXT ROUTE	26	NEXT ROUTE	26
NEXT STEP	**58**	NEXT STEP	**59**	NEXT STEP	**60**	NEXT STEP	**61**	NEXT STEP	**62**	NEXT STEP	**63**	NEXT STEP	**64**	NEXT STEP	**65**

Route 26:65		Route 26:66		Route 26:67		Route 26:68		Route 26:69		Route 26:70		Route 26:71		Route 26:72	
STEP INITIATION		**STEP INITIATION**		**STEP INITIATION**		**STEP INITIATION**		**STEP INITIATION**		**STEP INITIATION**		**STEP INITIATION**		**STEP INITIATION**	
Go Mode	Auto	**Go Mode**	Auto	**Go Mode**	Auto	**Go Mode**	Auto	**Go Mode**	Auto	**Go Mode**	Auto	**Go Mode**	Auto	**Go Mode**	Auto
Radio Input	dio Input 1-	**Radio Input**	dio Input 1-	**Radio Input**	dio Input 1-	**Radio Input**	dio Input 1-	**Radio Input**	dio Input 1-	**Radio Input**	dio Input 1-	**Radio Input**	dio Input 1-	**Radio Input**	dio Input 1-
Hard Wire Input		**Hard Wire Input**		**Hard Wire Input**		**Hard Wire Input**		**Hard Wire Input**		**Hard Wire Input**		**Hard Wire Input**	N/a	**Hard Wire Input**	N/a
BIT	N/A	**BIT**	N/A	**BIT**	N/A	**BIT**	N/A	**BIT**	N/A	**BIT**	N/A	**BIT**	N/A	**BIT**	N/A
STEP ACTION		**STEP ACTION**		**STEP ACTION**		**STEP ACTION**		**STEP ACTION**		**STEP ACTION**		**STEP ACTION**		**STEP ACTION**	
Function	Rotate	**Function**	Forward	**Function**	Rotate	**Function**	Forward	**Function**	Rotate	**Function**	Forward	**Function**	Rotate	**Function**	Forward
Speed	33	**Speed**	33	**Speed**	33	**Speed**	33	**Speed**	33	**Speed**	33	**Speed**	33	**Speed**	33
Navigation	DR	**Navigation**	DR	**Navigation**	DR	**Navigation**	DR	**Navigation**	DR	**Navigation**	DR	**Navigation**	DR	**Navigation**	DR
Direction	Center	**Direction**	Center	**Direction**	Center	**Direction**	Center	**Direction**	Center	**Direction**	Center	**Direction**	Center	**Direction**	Center
Size	-90	**Size**	274	**Size**	-90	**Size**	511	**Size**	-90	**Size**	2284	**Size**	90	**Size**	962
Loss Of Guidance	N/A	**Loss Of Guidance**	N/A	**Loss Of Guidance**	N/A	**Loss Of Guidance**	N/A	**Loss Of Guidance**	N/A	**Loss Of Guidance**	N/A	**Loss Of Guidance**	N/A	**Loss Of Guidance**	N/A
Obstacle Avoidance	1	**Obstacle Avoidance**	1	**Obstacle Avoidance**	1	**Obstacle Avoidance**	1	**Obstacle Avoidance**	1	**Obstacle Avoidance**	1	**Obstacle Avoidance**	1	**Obstacle Avoidance**	1
Output		**Output**		**Output**		**Output**		**Output**		**Output**		**Output**	N/a	**Output**	N/a
END OF STEP		**END OF STEP**		**END OF STEP**		**END OF STEP**		**END OF STEP**		**END OF STEP**		**END OF STEP**		**END OF STEP**	
END MODE	Distance	**END MODE**	Distance	**END MODE**	Distance	**END MODE**	Distance	**END MODE**	Distance	**END MODE**	Distance	**END MODE**	Distance	**END MODE**	Distance
END ACTION	Merge	**END ACTION**	Merge	**END ACTION**	Merge	**END ACTION**	Merge	**END ACTION**	Merge	**END ACTION**	Merge	**END ACTION**	Merge	**END ACTION**	Merge
NEXT ROUTE	26	**NEXT ROUTE**	26	**NEXT ROUTE**	26	**NEXT ROUTE**	26	**NEXT ROUTE**	26	**NEXT ROUTE**	26	**NEXT ROUTE**	26	**NEXT ROUTE**	26
NEXT STEP	**66**	**NEXT STEP**	**67**	**NEXT STEP**	**68**	**NEXT STEP**	**69**	**NEXT STEP**	**70**	**NEXT STEP**	**71**	**NEXT STEP**	**72**	**NEXT STEP**	**73**

Route 26:73		Route 26:74		Route 26:75		Route 26:76		Route 26:77		Route 26:78		Route 0: 1	
STEP INITIATION		**STEP INITIATION**		**STEP INITIATION**		**STEP INITIATION**		**STEP INITIATION**		**STEP INITIATION**		**STEP INITIATION**	
Go Mode	Auto	**Go Mode**	Auto	**Go Mode**	Auto	**Go Mode**	Auto	**Go Mode**	Auto	**Go Mode**	Auto	**Go Mode**	nput Trigge
Radio Input	dio Input 1-	**Radio Input**	dio Input 1-	**Radio Input**	dio Input 1-	**Radio Input**	dio Input 1-	**Radio Input**	dio Input 1-	**Radio Input**	dio Input 1-	**Radio Input**	dio Input 1-
Hard Wire Input	N/a	**Hard Wire Input**	N/a	**Hard Wire Input**	N/a	**Hard Wire Input**	N/a	**Hard Wire Input**	N/a	**Hard Wire Input**	N/a	**Hard Wire Input**	N/a
BIT	N/A	**BIT**	N/A	**BIT**	N/A	**BIT**	N/A	**BIT**	N/A	**BIT**	N/A	**BIT**	BIT #1-#24
STEP ACTION		**STEP ACTION**		**STEP ACTION**		**STEP ACTION**		**STEP ACTION**		**STEP ACTION**		**STEP ACTION**	
Function	Rotate	**Function**	Forward	**Function**	Rotate	**Function**	Forward	**Function**	Rotate	**Function**	Reverse	**Function**	Auto
Speed	33	**Speed**	33	**Speed**	33	**Speed**	33	**Speed**	33	**Speed**	33	**Speed**	33
Navigation	DR	**Navigation**	DR	**Navigation**	DR	**Navigation**	DR	**Navigation**	DR	**Navigation**	DR	**Navigation**	DR
Direction	Center	**Direction**	Center	**Direction**	Center	**Direction**	Center	**Direction**	Center	**Direction**	Center	**Direction**	Center
Size	-90	**Size**	525	**Size**	90	**Size**	417	**Size**	-90	**Size**	66	**Size**	66
Loss Of Guidance	N/A	**Loss Of Guidance**	N/A	**Loss Of Guidance**	N/A	**Loss Of Guidance**	N/A	**Loss Of Guidance**	N/A	**Loss Of Guidance**	N/A	**Loss Of Guidance**	N/A
Obstacle Avoidance	1	**Obstacle Avoidance**	1	**Obstacle Avoidance**	1	**Obstacle Avoidance**	1	**Obstacle Avoidance**	1	**Obstacle Avoidance**	1	**Obstacle Avoidance**	1
Output	N/a	**Output**	N/a	**Output**	N/a	**Output**	N/a	**Output**	N/a	**Output**	N/a	**Output**	N/a
END OF STEP		**END OF STEP**		**END OF STEP**		**END OF STEP**		**END OF STEP**		**END OF STEP**		**END OF STEP**	
END MODE	Distance	**END MODE**	Distance	**END MODE**	Distance	**END MODE**	Distance	**END MODE**	Distance	**END MODE**	Distance	**END MODE**	Distance
END ACTION	Merge	**END ACTION**	Merge	**END ACTION**	Merge	**END ACTION**	Merge	**END ACTION**	Merge	**END ACTION**	Merge	**END ACTION**	Merge
NEXT ROUTE	26	**NEXT ROUTE**	26	**NEXT ROUTE**	26	**NEXT ROUTE**	26	**NEXT ROUTE**	26	**NEXT ROUTE**	0	**NEXT ROUTE**	0
NEXT STEP	**74**	**NEXT STEP**	**75**	**NEXT STEP**	**76**	**NEXT STEP**	**77**	**NEXT STEP**	**78**	**NEXT STEP**	1	**NEXT STEP**	1

Tier 3 Route 27

Route 27:1		Route 27:2		Route 27:3		Route 27:4		Route 27:5		Route 27:6		Route 27:7		Route 27:8	
STEP INITIATION		**STEP INITIATION**		**STEP INITIATION**		**STEP INITIATION**		**STEP INITIATION**		**STEP INITIATION**		**STEP INITIATION**		**STEP INITIATION**	
Go Mode	nput Triggers	**Go Mode**	Auto	**Go Mode**	Auto	**Go Mode**	Auto	**Go Mode**	Auto	**Go Mode**	Auto	**Go Mode**	Auto	**Go Mode**	Auto
Radio Input	adio Input 1-2	**Radio Input**	dio Input 1-	**Radio Input**	dio Input 1-	**Radio Input**	dio Input 1-	**Radio Input**	dio Input 1-	**Radio Input**	dio Input 1-	**Radio Input**	dio Input 1-	**Radio Input**	dio Input 1-
Hard Wire Input	N/A	**Hard Wire Input**	N/A	**Hard Wire Input**	N/A	**Hard Wire Input**	N/A	**Hard Wire Input**	N/A	**Hard Wire Input**	N/A	**Hard Wire Input**	N/A	**Hard Wire Input**	N/A
BIT	Bit #1 off	**BIT**	N/A	**BIT**	N/A	**BIT**	N/A	**BIT**	N/A	**BIT**	N/A	**BIT**	N/A	**BIT**	N/A
Bit#12 On, #22 On	it #5 and 6 Off														
Home Position RFID	it #7 and 9 of														
	t #8 and 10 o														
STEP ACTION		**STEP ACTION**		**STEP ACTION**		**STEP ACTION**		**STEP ACTION**		**STEP ACTION**		**STEP ACTION**		**STEP ACTION**	
Function	Dispatch	**Function**	Forward	**Function**	Rotate	**Function**	Forward	**Function**	Rotate	**Function**	Forward	**Function**	Rotate	**Function**	Forward
Speed	N/A	**Speed**	33	**Speed**	33	**Speed**	33	**Speed**	33	**Speed**	33	**Speed**	33	**Speed**	33
Navigation	N/A	**Navigation**	DR	**Navigation**	DR	**Navigation**	DR	**Navigation**	DR	**Navigation**	DR	**Navigation**	DR	**Navigation**	DR
Direction	N/A	**Direction**	Center	**Direction**	Center	**Direction**	Center	**Direction**	Center	**Direction**	Center	**Direction**	Center	**Direction**	Center
Size	N/A	**Size**	66	**Size**	-90	**Size**	417	**Size**	-90	**Size**	525	**Size**	90	**Size**	962
Loss Of Guidance	N/A	**Loss Of Guidance**	N/A	**Loss Of Guidance**	N/A	**Loss Of Guidance**	N/A	**Loss Of Guidance**	N/A	**Loss Of Guidance**	N/A	**Loss Of Guidance**	N/A	**Loss Of Guidance**	N/A
Obstacle Avoidance	N/A	**Obstacle Avoidance**	1	**Obstacle Avoidance**	1	**Obstacle Avoidance**	1	**Obstacle Avoidance**	1	**Obstacle Avoidance**	1	**Obstacle Avoidance**	1	**Obstacle Avoidance**	1
Output	N/A	**Output**	N/A	**Output**	N/A	**Output**	N/A	**Output**	N/A	**Output**	N/A	**Output**	N/A	**Output**	N/A
END OF STEP		**END OF STEP**		**END OF STEP**		**END OF STEP**		**END OF STEP**		**END OF STEP**		**END OF STEP**		**END OF STEP**	
END MODE	N/A	**END MODE**	Distance	**END MODE**	Distance	**END MODE**	Distance	**END MODE**	Distance	**END MODE**	Distance	**END MODE**	Distance	**END MODE**	Distance
END ACTION	e Bit #12, #2	**END ACTION**	Merge	**END ACTION**	Merge	**END ACTION**	Merge	**END ACTION**	Merge	**END ACTION**	Merge	**END ACTION**	Merge	**END ACTION**	Merge
NEXT ROUTE	27	**NEXT ROUTE**	27	**NEXT ROUTE**	27	**NEXT ROUTE**	27	**NEXT ROUTE**	27	**NEXT ROUTE**	27	**NEXT ROUTE**	27	**NEXT ROUTE**	27
NEXT STEP	**2**	**NEXT STEP**	**3**	**NEXT STEP**	**4**	**NEXT STEP**	**5**	**NEXT STEP**	**6**	**NEXT STEP**	**7**	**NEXT STEP**	**8**	**NEXT STEP**	**9**

Route 27:9		Route 27:10		Route 27:11		Route 27:12		Route 27:13		Route 27:14		Route 27:15		Route 27:16	
STEP INITIATION		**STEP INITIATION**		**STEP INITIATION**		**STEP INITIATION**		**STEP INITIATION**		**STEP INITIATION**		**STEP INITIATION**		**STEP INITIATION**	
Go Mode	Auto	**Go Mode**	Auto	**Go Mode**	Auto	**Go Mode**	Auto	**Go Mode**	Auto	**Go Mode**	Auto	**Go Mode**	Auto	**Go Mode**	Auto
Radio Input	dio Input 1-	**Radio Input**	dio Input 1-	**Radio Input**	dio Input 1-	**Radio Input**	dio Input 1-	**Radio Input**	dio Input 1-	**Radio Input**	dio Input 1-	**Radio Input**	dio Input 1-	**Radio Input**	dio Input 1-
Hard Wire Input	N/A	**Hard Wire Input**	N/A	**Hard Wire Input**	N/A	**Hard Wire Input**	N/A	**Hard Wire Input**	N/A	**Hard Wire Input**	N/A	**Hard Wire Input**	N/A	**Hard Wire Input**	N/A
BIT	N/A	**BIT**	N/A	**BIT**	N/A	**BIT**	N/A	**BIT**	N/A	**BIT**	N/A	**BIT**	N/A	**BIT**	N/A
STEP ACTION		**STEP ACTION**		**STEP ACTION**		**STEP ACTION**		**STEP ACTION**		**STEP ACTION**		**STEP ACTION**		**STEP ACTION**	
Function	Rotate	**Function**	Forward	**Function**	Rotate	**Function**	Forward	**Function**	Rotate	**Function**	Forward	**Function**	Rotate	**Function**	Reverse
Speed	33	**Speed**	33	**Speed**	33	**Speed**	33	**Speed**	33	**Speed**	33	**Speed**	33	**Speed**	33
Navigation	DR	**Navigation**	DR	**Navigation**	DR	**Navigation**	DR	**Navigation**	DR	**Navigation**	DR	**Navigation**	DR	**Navigation**	DR
Direction	Center	**Direction**	Center	**Direction**	Center	**Direction**	Center	**Direction**	Center	**Direction**	Center	**Direction**	Center	**Direction**	Center
Size	-90	**Size**	2284	**Size**	90	**Size**	511	**Size**	90	**Size**	144	**Size**	90	**Size**	62
Loss Of Guidance	N/A	**Loss Of Guidance**	N/A	**Loss Of Guidance**	N/A	**Loss Of Guidance**	N/A	**Loss Of Guidance**	N/A	**Loss Of Guidance**	N/A	**Loss Of Guidance**	N/A	**Loss Of Guidance**	N/A
Obstacle Avoidance	1	**Obstacle Avoidance**	1	**Obstacle Avoidance**	1	**Obstacle Avoidance**	1	**Obstacle Avoidance**	1	**Obstacle Avoidance**	1	**Obstacle Avoidance**	1	**Obstacle Avoidance**	1
Output	N/A	**Output**	N/A	**Output**	N/A	**Output**	N/A	**Output**	N/A	**Output**	N/A	**Output**	N/A	**Output**	#6 Pin Up
END OF STEP		**END OF STEP**		**END OF STEP**		**END OF STEP**		**END OF STEP**		**END OF STEP**		**END OF STEP**		**END OF STEP**	
END MODE	Distance	**END MODE**	Distance	**END MODE**	Distance	**END MODE**	Distance	**END MODE**	Distance	**END MODE**	Distance	**END MODE**	Distance	**END MODE**	Distance
END ACTION	Merge	**END ACTION**	Merge	**END ACTION**	Merge	**END ACTION**	Merge	**END ACTION**	Merge	**END ACTION**	Merge	**END ACTION**	Merge	**END ACTION**	Merge
NEXT ROUTE	27	**NEXT ROUTE**	27	**NEXT ROUTE**	27	**NEXT ROUTE**	27	**NEXT ROUTE**	27	**NEXT ROUTE**	27	**NEXT ROUTE**	27	**NEXT ROUTE**	27
NEXT STEP	**10**	**NEXT STEP**	**11**	**NEXT STEP**	**12**	**NEXT STEP**	**13**	**NEXT STEP**	**14**	**NEXT STEP**	**15**	**NEXT STEP**	**16**	**NEXT STEP**	**17**

Route 27:17		Route 27:18		Route 27:19		Route 27:20		Route 27:21		Route 27:22		Route 27:23		Route 27:24	
STEP INITIATION		**STEP INITIATION**		**STEP INITIATION**		**STEP INITIATION**		**STEP INITIATION**		**STEP INITIATION**		**STEP INITIATION**		**STEP INITIATION**	
Go Mode	Auto	**Go Mode**	Auto	**Go Mode**	Auto	**Go Mode**	Auto	**Go Mode**	Auto	**Go Mode**	Auto	**Go Mode**	Auto	**Go Mode**	Auto
Radio Input	dio Input 1-	**Radio Input**	dio Input 1-	**Radio Input**	dio Input 1-	**Radio Input**	dio Input 1-	**Radio Input**	dio Input 1-	**Radio Input**	dio Input 1-	**Radio Input**	dio Input 1-	**Radio Input**	dio Input 1-
Hard Wire Input	N/A	**Hard Wire Input**	N/A	**Hard Wire Input**	N/A	**Hard Wire Input**	N/A	**Hard Wire Input**	N/A	**Hard Wire Input**	N/A	**Hard Wire Input**	N/A	**Hard Wire Input**	N/A
BIT	N/A	**BIT**	N/A	**BIT**	N/A	**BIT**	N/A	**BIT**	N/A	**BIT**	N/A	**BIT**	N/A	**BIT**	N/A
STEP ACTION		**STEP ACTION**		**STEP ACTION**		**STEP ACTION**		**STEP ACTION**		**EP ACTION**		**STEP ACTION**		**STEP ACTION**	
Function	Forward	**Function**	Rotate	**Function**	Forward	**Function**	Rotate	**Function**	Forward	**Function**	Rotate	**Function**	Forward	**Function**	Rotate
Speed	33	**Speed**	33	**Speed**	33	**Speed**	33	**Speed**	33	**Speed**	33	**Speed**	33	**Speed**	33
Navigation	DR	**Navigation**	DR	**Navigation**	DR	**Navigation**	DR	**Navigation**	DR	**Navigation**	DR	**Navigation**	DR	**Navigation**	DR
Direction	Center	**Direction**	Center	**Direction**	Center	**Direction**	Center	**Direction**	Center	**Direction**	Center	**Direction**	Center	**Direction**	Center
Size	62	**Size**	90	**Size**	144	**Size**	-90	**Size**	511	**Size**	-90	**Size**	2284	**Size**	90
Loss Of Guidance	N/A	**Loss Of Guidance**	N/A	**Loss Of Guidance**	N/A	**Loss Of Guidance**	N/A	**Loss Of Guidance**	N/A	**Loss Of Guidance**	N/A	**Loss Of Guidance**	N/A	**Loss Of Guidance**	N/A
Obstacle Avoidance	1	**Obstacle Avoidance**	1	**Obstacle Avoidance**	1	**Obstacle Avoidance**	1	**Obstacle Avoidance**	1	**Obstacle Avoidance**	1	**Obstacle Avoidance**	1	**Obstacle Avoidance**	1
Output	N/A	**Output**	N/A	**Output**	N/A	**Output**	N/A	**Output**	N/A	**Output**	N/A	**Output**	N/A	**Output**	N/A
END OF STEP		**END OF STEP**		**END OF STEP**		**END OF STEP**		**END OF STEP**		**ID OF STEP**		**END OF STEP**		**END OF STEP**	
END MODE	Distance	**END MODE**	Distance	**END MODE**	Distance	**END MODE**	Distance	**END MODE**	Distance	**END MODE**	Distance	**END MODE**	Distance	**END MODE**	Distance
END ACTION	Merge	**END ACTION**	Merge	**END ACTION**	Merge	**END ACTION**	Merge	**END ACTION**	Merge	**END ACTION**	Merge	**END ACTION**	Merge	**END ACTION**	Merge
NEXT ROUTE	27	**NEXT ROUTE**	27	**NEXT ROUTE**	27	**NEXT ROUTE**	27	**NEXT ROUTE**	27	**NEXT ROUTE**	27	**NEXT ROUTE**	27	**NEXT ROUTE**	27
NEXT STEP	**18**	**NEXT STEP**	**19**	**NEXT STEP**	**20**	**NEXT STEP**	**21**	**NEXT STEP**	**22**	**NEXT STEP**	**23**	**NEXT STEP**	**24**	**NEXT STEP**	**25**

Route 27:25		Route 27:26		Route 27:27		Route 27:28		Route 27:29		Route 27:30		Route 27:31		Route 27:32	
STEP INITIATION		**STEP INITIATION**		**STEP INITIATION**		**STEP INITIATION**		**STEP INITIATION**		**STEP INITIATION**		**STEP INITIATION**		**STEP INITIATION**	
Go Mode	Auto	**Go Mode**	Auto	**Go Mode**	Auto	**Go Mode**	Auto	**Go Mode**	Auto	**Go Mode**	Auto	**Go Mode**	Auto	**Go Mode**	Auto
Radio Input	dio Input 1-	**Radio Input**	dio Input 1-	**Radio Input**	dio Input 1-	**Radio Input**	dio Input 1-	**Radio Input**	dio Input 1-	**Radio Input**	dio Input 1-	**Radio Input**	dio Input 1-	**Radio Input**	dio Input 1-
Hard Wire Input	N/A	**Hard Wire Input**	N/A	**Hard Wire Input**	N/A	**Hard Wire Input**	N/A	**Hard Wire Input**	N/A	**Hard Wire Input**	N/A	**Hard Wire Input**	N/A	**Hard Wire Input**	Cart prese
BIT	N/A	**BIT**	N/A	**BIT**	N/A	**BIT**	N/A	**BIT**	N/A	**BIT**	N/A	**BIT**	N/A	**BIT**	N/A
STEP ACTION		**STEP ACTION**		**STEP ACTION**		**STEP ACTION**		**STEP ACTION**		**STEP ACTION**		**STEP ACTION**		**STEP ACTION**	
Function	Forward	**Function**	Rotate	**Function**	Reverse	**Function**	Delay	**Function**	Forward	**Function**	Rotate	**Function**	Reverse	**Function**	Forward
Speed	33	**Speed**	33	**Speed**	33	**Speed**	33	**Speed**	33	**Speed**	33	**Speed**	33	**Speed**	33
Navigation	DR	**Navigation**	DR	**Navigation**	DR	**Navigation**	DR	**Navigation**	DR	**Navigation**	DR	**Navigation**	DR	**Navigation**	DR
Direction	Center	**Direction**	Center	**Direction**	Center	**Direction**	Center	**Direction**	Center	**Direction**	Center	**Direction**	Center	**Direction**	Center
Size	1240	**Size**	90	**Size**	279	**Size**	5	**Size**	164	**Size**	-90	**Size**	102	**Size**	102
Loss Of Guidance	N/A	**Loss Of Guidance**	N/A	**Loss Of Guidance**	N/A	**Loss Of Guidance**	N/A	**Loss Of Guidance**	N/A	**Loss Of Guidance**	N/A	**Loss Of Guidance**	N/A	**Loss Of Guidance**	N/A
Obstacle Avoidance	1	**Obstacle Avoidance**	1	**Obstacle Avoidance**	1	**Obstacle Avoidance**	1	**Obstacle Avoidance**	1	**Obstacle Avoidance**	1	**Obstacle Avoidance**	1	**Obstacle Avoidance**	1
Output	N/A	**Output**	N/A	**Output**	N/A	**Output**	#7 Pin Drop	**Output**		**Output**		**Output**	#6 pin up	**Output**	N/a
END OF STEP		**END OF STEP**		**END OF STEP**		**END OF STEP**		**END OF STEP**		**END OF STEP**		**END OF STEP**		**END OF STEP**	
END MODE	Distance	**END MODE**	Distance	**END MODE**	Distance	**END MODE**	time	**END MODE**	Distance	**END MODE**	Distance	**END MODE**	Distance	**END MODE**	Distance
END ACTION	Merge	**END ACTION**	Merge	**END ACTION**	Merge	**END ACTION**	Merge	**END ACTION**	Merge	**END ACTION**	Merge	**END ACTION**	Merge	**END ACTION**	Merge
NEXT ROUTE	27	**NEXT ROUTE**	27	**NEXT ROUTE**	27	**NEXT ROUTE**	27	**NEXT ROUTE**	27	**NEXT ROUTE**	27	**NEXT ROUTE**	27	**NEXT ROUTE**	27
NEXT STEP	**26**	**NEXT STEP**	**27**	**NEXT STEP**	**28**	**NEXT STEP**	**29**	**NEXT STEP**	**30**	**NEXT STEP**	**31**	**NEXT STEP**	**32**	**NEXT STEP**	**33**

Route 27:33		Route 27:34		Route 27:35		Route 27:36		Route 27:37		Route 27:38		Route 27:39		Route 27:40	
STEP INITIATION		STEP INITIATION		STEP INITIATION		STEP INITIATION		STEP INITIATION		STEP INITIATION		STEP INITIATION		STEP INITIATION	
Go Mode	Auto	Go Mode	Auto	Go Mode	Auto	Go Mode	Auto	Go Mode	Auto	Go Mode	Auto	Go Mode	Auto	Go Mode	Auto
Radio Input	dio Input 1-	Radio Input	dio Input 1-	Radio Input	dio Input 1-	Radio Input	dio Input 1-	Radio Input	dio Input 1-	Radio Input	dio Input 1-	Radio Input	dio Input 1-	Radio Input	dio Input 1-
Hard Wire Input	N/A	Hard Wire Input	N/A	Hard Wire Input	N/A	Hard Wire Input	N/A	Hard Wire Input	N/A	Hard Wire Input	N/A	Hard Wire Input	N/A	Hard Wire Input	N/A
BIT	N/A	BIT	N/A	BIT	N/A	BIT	N/A	BIT	N/A	BIT	N/A	BIT	N/A	BIT	N/A
STEP ACTION		STEP ACTION		STEP ACTION		STEP ACTION		STEP ACTION		STEP ACTION		STEP ACTION		STEP ACTION	
Function	Rotate	Function	Reverse	Function	Rotate	Function	Reverse	Function	Delay	Function	Forward	Function	Rotate	Function	Reverse
Speed	33	Speed	33	Speed	33	Speed	33	Speed	33	Speed	33	Speed	33	Speed	33
Navigation	DR	Navigation	DR	Navigation	DR	Navigation	DR	Navigation	DR	Navigation	DR	Navigation	DR	Navigation	DR
Direction	Center	Direction	Center	Direction	Center	Direction	Center	Direction	Center	Direction	Center	Direction	Center	Direction	Center
Size	90	Size	60	Size	-45	Size	99	Size	5	Size	99	Size	45	Size	104
Loss Of Guidance	N/A	Loss Of Guidance	N/A	Loss Of Guidance	N/A	Loss Of Guidance	N/A	Loss Of Guidance	N/A	Loss Of Guidance	N/A	Loss Of Guidance	N/A	Loss Of Guidance	N/A
Obstacle Avoidance	1	Obstacle Avoidance	1	Obstacle Avoidance	1	Obstacle Avoidance	1	Obstacle Avoidance	1	Obstacle Avoidance	1	Obstacle Avoidance	1	Obstacle Avoidance	1
Output	N/a	Output	N/a	Output	N/a	Output	N/a	Output	#7 pin drop	Output	N/a	Output	N/a	Output	#7 pin raise
END OF STEP		END OF STEP		END OF STEP		END OF STEP		END OF STEP		END OF STEP		END OF STEP		END OF STEP	
END MODE	Distance	END MODE	Distance	END MODE	Distance	END MODE	Distance	END MODE	time	END MODE	Distance	END MODE	Distance	END MODE	Distance
END ACTION	Merge	END ACTION	Merge	END ACTION	Merge	END ACTION	Merge	END ACTION	Merge	END ACTION	Merge	END ACTION	Merge	END ACTION	Merge
NEXT ROUTE	27	NEXT ROUTE	27	NEXT ROUTE	27	NEXT ROUTE	27	NEXT ROUTE	27	NEXT ROUTE	27	NEXT ROUTE	27	NEXT ROUTE	27
NEXT STEP	34	NEXT STEP	35	NEXT STEP	36	NEXT STEP	37	NEXT STEP	38	NEXT STEP	39	NEXT STEP	40	NEXT STEP	41

Route 27:41		Route 27:42		Route 27:43		Route 27:44		Route 27:45		Route 27:46		Route 27:47		Route 27:48	
STEP INITIATION		STEP INITIATION		STEP INITIATION		STEP INITIATION		STEP INITIATION		STEP INITIATION		STEP INITIATION		STEP INITIATION	
Go Mode	Auto	Go Mode	Auto	Go Mode	Auto	Go Mode	Auto	Go Mode	Auto	Go Mode	Auto	Go Mode	Auto	Go Mode	Auto
Radio Input	dio Input 1-	Radio Input	dio Input 1-	Radio Input	dio Input 1-	Radio Input	dio Input 1-	Radio Input	dio Input 1-	Radio Input	dio Input 1-	Radio Input	dio Input 1-	Radio Input	dio Input 1-
Hard Wire Input	N/A	Hard Wire Input	N/A	Hard Wire Input	N/A	Hard Wire Input	N/A	Hard Wire Input	N/A	Hard Wire Input	N/A	Hard Wire Input	N/A	Hard Wire Input	N/A
BIT	N/A	BIT	N/A	BIT	N/A	BIT	N/A	BIT	N/A	BIT	N/A	BIT	N/A	BIT	N/A
STEP ACTION		STEP ACTION		STEP ACTION		STEP ACTION		STEP ACTION		STEP ACTION		STEP ACTION		STEP ACTION	
Function	Forward	Function	Rotate	Function	Reverse	Function	Delay	Function	Forward	Function	Rotate	Function	Reverse	Function	Rotate
Speed	33	Speed	33	Speed	33	Speed	33	Speed	33	Speed	33	Speed	33	Speed	33
Navigation	DR	Navigation	DR	Navigation	DR	Navigation	DR	Navigation	DR	Navigation	DR	Navigation	DR	Navigation	DR
Direction	Center	Direction	Center	Direction	Center	Direction	Center	Direction	Center	Direction	Center	Direction	Center	Direction	Center
Size	164	Size	-90	Size	102	Size	5	Size	102	Size	90	Size	60	Size	-45
Loss Of Guidance	N/A	Loss Of Guidance	N/A	Loss Of Guidance	N/A	Loss Of Guidance	N/A	Loss Of Guidance	N/A	Loss Of Guidance	N/A	Loss Of Guidance	N/A	Loss Of Guidance	N/A
Obstacle Avoidance	1	Obstacle Avoidance	1	Obstacle Avoidance	1	Obstacle Avoidance	1	Obstacle Avoidance	1	Obstacle Avoidance	1	Obstacle Avoidance	1	Obstacle Avoidance	1
Output	N/A	Output	N/A	Output	N/A	Output	#7 Pin Drop	Output	N/a	Output	N/a	Output	N/a	Output	N/a
END OF STEP		END OF STEP		END OF STEP		END OF STEP		END OF STEP		END OF STEP		END OF STEP		END OF STEP	
END MODE	Distance	END MODE	Distance	END MODE	Distance	END MODE	Time	END MODE	Distance	END MODE	Distance	END MODE	Distance	END MODE	Distance
END ACTION	Merge	END ACTION	Merge	END ACTION	Merge	END ACTION	Merge	END ACTION	Merge	END ACTION	Merge	END ACTION	Merge	END ACTION	Merge
NEXT ROUTE	27	NEXT ROUTE	27	NEXT ROUTE	27	NEXT ROUTE	27	NEXT ROUTE	27	NEXT ROUTE	27	NEXT ROUTE	27	NEXT ROUTE	27
NEXT STEP	42	NEXT STEP	43	NEXT STEP	44	NEXT STEP	45	NEXT STEP	46	NEXT STEP	47	NEXT STEP	48	NEXT STEP	49

Route 27:49		Route 27:50		Route 27:51		Route 27:52		Route 27:53		Route 27:54		Route 27:55		Route 27:56	
STEP INITIATION		STEP INITIATION		STEP INITIATION		STEP INITIATION		STEP INITIATION		STEP INITIATION		STEP INITIATION		STEP INITIATION	
Go Mode	Auto	Go Mode	Auto	Go Mode	Auto	Go Mode	Auto	Go Mode	Auto	Go Mode	Auto	Go Mode	Auto	Go Mode	Auto
Radio Input	dio Input 1-	Radio Input	dio Input 1-	Radio Input	dio Input 1-	Radio Input	dio Input 1-	Radio Input	dio Input 1-	Radio Input	dio Input 1-	Radio Input	dio Input 1-	Radio Input	dio Input 1-
Hard Wire Input	N/A	Hard Wire Input	Cart Prese	Hard Wire Input		Hard Wire Input		Hard Wire Input		Hard Wire Input		Hard Wire Input		Hard Wire Input	
BIT	N/A	BIT	N/A	BIT	N/A	BIT	N/A	BIT	N/A	BIT	N/A	BIT	N/A	BIT	N/A
STEP ACTION		STEP ACTION		STEP ACTION		STEP ACTION		STEP ACTION		STEP ACTION		STEP ACTION		STEP ACTION	
Function	Reverse	Function	Forward	Function	Rotate	Function	Forward	Function	Rotate	Function	Forward	Function	Rotate	Function	Forward
Speed	33	Speed	33	Speed	33	Speed	33	Speed	33	Speed	33	Speed	33	Speed	33
Navigation	DR	Navigation	DR	Navigation	DR	Navigation	DR	Navigation	DR	Navigation	DR	Navigation	DR	Navigation	DR
Direction	Center	Direction	Center	Direction	Center	Direction	Center	Direction	Center	Direction	Center	Direction	Center	Direction	Center
Size	99	Size	99	Size	45	Size	174	Size	90	Size	1240	Size	-90	Size	2284
Loss Of Guidance	N/A	Loss Of Guidance	N/A	Loss Of Guidance	N/A	Loss Of Guidance	N/A	Loss Of Guidance	N/A	Loss Of Guidance	N/A	Loss Of Guidance	N/A	Loss Of Guidance	N/A
Obstacle Avoidance	1	Obstacle Avoidance	1	Obstacle Avoidance	1	Obstacle Avoidance	1	Obstacle Avoidance	1	Obstacle Avoidance	1	Obstacle Avoidance	1	Obstacle Avoidance	1
Output	#6 Pin Raise	Output	N/a	Output	N/a	Output	N/a	Output	N/a	Output	N/a	Output	N/a	Output	N/a
END OF STEP		END OF STEP		END OF STEP		END OF STEP		END OF STEP		END OF STEP		END OF STEP		END OF STEP	
END MODE	Distance	END MODE	Distance	END MODE	Distance	END MODE	Distance	END MODE	Distance	END MODE	Distance	END MODE	Distance	END MODE	Distance
END ACTION	Merge	END ACTION	Merge	END ACTION	Merge	END ACTION	Merge	END ACTION	Merge	END ACTION	Merge	END ACTION	Merge	END ACTION	Merge
NEXT ROUTE	27	NEXT ROUTE	27	NEXT ROUTE	27	NEXT ROUTE	27	NEXT ROUTE	27	NEXT ROUTE	27	NEXT ROUTE	27	NEXT ROUTE	27
NEXT STEP	50	NEXT STEP	51	NEXT STEP	52	NEXT STEP	53	NEXT STEP	54	NEXT STEP	55	NEXT STEP	56	NEXT STEP	57

Route 27:57		Route 27:58		Route 27:59		Route 27:60		Route 27:61		Route 27:62		Route 27:63		Route 27:64	
STEP INITIATION		STEP INITIATION		STEP INITIATION		STEP INITIATION		STEP INITIATION		STEP INITIATION		STEP INITIATION		STEP INITIATION	
Go Mode	Auto	Go Mode	Auto	Go Mode	Auto	Go Mode	Auto	Go Mode	Auto	Go Mode	Auto	Go Mode	Auto	Go Mode	Auto
Radio Input	dio Input 1-	Radio Input	dio Input 1-	Radio Input	dio Input 1-	Radio Input	dio Input 1-	Radio Input	dio Input 1-	Radio Input	dio Input 1-	Radio Input	dio Input 1-	Radio Input	dio Input 1-
Hard Wire Input		Hard Wire Input		Hard Wire Input		Hard Wire Input		Hard Wire Input		Hard Wire Input		Hard Wire Input		Hard Wire Input	
BIT	N/A	BIT	N/A	BIT	N/A	BIT	N/A	BIT	N/A	BIT	N/A	BIT	N/A	BIT	N/A
STEP ACTION		STEP ACTION		STEP ACTION		STEP ACTION		STEP ACTION		STEP ACTION		STEP ACTION		STEP ACTION	
Function	Rotate	Function	Forward	Function	Rotate	Function	Forward	Function	Rotate	Function	Reverse	Function	Dellay	Function	Forward
Speed	33	Speed	33	Speed	33	Speed	33	Speed	33	Speed	33	Speed	33	Speed	33
Navigation	DR	Navigation	DR	Navigation	DR	Navigation	DR	Navigation	DR	Navigation	DR	Navigation	DR	Navigation	DR
Direction	Center	Direction	Center	Direction	Center	Direction	Center	Direction	Center	Direction	Center	Direction	Center	Direction	Center
Size	90	Size	511	Size	90	Size	144	Size	90	Size	62	Size	5	Size	62
Loss Of Guidance	N/A	Loss Of Guidance	N/A	Loss Of Guidance	N/A	Loss Of Guidance	N/A	Loss Of Guidance	N/A	Loss Of Guidance	N/A	Loss Of Guidance	N/A	Loss Of Guidance	N/A
Obstacle Avoidance	1	Obstacle Avoidance	1	Obstacle Avoidance	1	Obstacle Avoidance	1	Obstacle Avoidance	1	Obstacle Avoidance	1	Obstacle Avoidance	1	Obstacle Avoidance	1
Output	N/a	Output	N/a	Output	N/a	Output	N/a	Output	N/a	Output	N/a	Output	#7 Pin Drop	Output	
END OF STEP		END OF STEP		END OF STEP		END OF STEP		END OF STEP		END OF STEP		END OF STEP		END OF STEP	
END MODE	Distance	END MODE	Distance	END MODE	Distance	END MODE	Distance	END MODE	Distance	END MODE	Distance	END MODE	time	END MODE	Distance
END ACTION	Merge	END ACTION	Merge	END ACTION	Merge	END ACTION	Merge	END ACTION	Merge	END ACTION	Merge	END ACTION	Merge	END ACTION	Merge
NEXT ROUTE	27	NEXT ROUTE	27	NEXT ROUTE	27	NEXT ROUTE	27	NEXT ROUTE	27	NEXT ROUTE	27	NEXT ROUTE	27	NEXT ROUTE	27
NEXT STEP	58	NEXT STEP	59	NEXT STEP	60	NEXT STEP	61	NEXT STEP	62	NEXT STEP	63	NEXT STEP	64	NEXT STEP	65

Route 27:65		Route 27:66		Route 27:67		Route 27:68		Route 27:69		Route 27:70		Route 27:71		Route 27:72	
STEP INITIATION		STEP INITIATION		STEP INITIATION		STEP INITIATION		STEP INITIATION		STEP INITIATION		STEP INITIATION		STEP INITIATION	
Go Mode	Auto	Go Mode	Auto	Go Mode	Auto	Go Mode	Auto	Go Mode	Auto	Go Mode	Auto	Go Mode	Auto	Go Mode	Auto
Radio Input	dio Input 1-	Radio Input	dio Input 1-	Radio Input	dio Input 1-	Radio Input	dio Input 1-	Radio Input	dio Input 1-	Radio Input	dio Input 1-	Radio Input	dio Input 1-	Radio Input	dio Input 1-
Hard Wire Input		Hard Wire Input		Hard Wire Input		Hard Wire Input		Hard Wire Input		Hard Wire Input		Hard Wire Input	N/a	Hard Wire Input	N/a
BIT	N/A	BIT	N/A	BIT	N/A	BIT	N/A	BIT	N/A	BIT	N/A	BIT	N/A	BIT	N/A
STEP ACTION		STEP ACTION		STEP ACTION		STEP ACTION		STEP ACTION		STEP ACTION		STEP ACTION		STEP ACTION	
Function	Rotate	Function	Forward	Function	Rotate	Function	Forward	Function	Rotate	Function	Forward	Function	Rotate	Function	Forward
Speed	33	Speed	33	Speed	33	Speed	33	Speed	33	Speed	33	Speed	33	Speed	33
Navigation	DR	Navigation	DR	Navigation	DR	Navigation	DR	Navigation	DR	Navigation	DR	Navigation	DR	Navigation	DR
Direction	Center	Direction	Center	Direction	Center	Direction	Center	Direction	Center	Direction	Center	Direction	Center	Direction	Center
Size	90	Size	144	Size	-90	Size	511	Size	-90	Size	2284	Size	90	Size	962
Loss Of Guidance	N/A	Loss Of Guidance	N/A	Loss Of Guidance	N/A	Loss Of Guidance	N/A	Loss Of Guidance	N/A	Loss Of Guidance	N/A	Loss Of Guidance	N/A	Loss Of Guidance	N/A
Obstacle Avoidance	1	Obstacle Avoidance	1	Obstacle Avoidance	1	Obstacle Avoidance	1	Obstacle Avoidance	1	Obstacle Avoidance	1	Obstacle Avoidance	1	Obstacle Avoidance	1
Output		Output		Output		Output		Output		Output		Output	N/a	Output	N/a
END OF STEP		END OF STEP		END OF STEP		END OF STEP		END OF STEP		END OF STEP		END OF STEP		END OF STEP	
END MODE	Distance	END MODE	Distance	END MODE	Distance	END MODE	Distance	END MODE	Distance	END MODE	Distance	END MODE	Distance	END MODE	Distance
END ACTION	Merge	END ACTION	Merge	END ACTION	Merge	END ACTION	Merge	END ACTION	Merge	END ACTION	Merge	END ACTION	Merge	END ACTION	Merge
NEXT ROUTE	27	NEXT ROUTE	27	NEXT ROUTE	27	NEXT ROUTE	27	NEXT ROUTE	27	NEXT ROUTE	27	NEXT ROUTE	27	NEXT ROUTE	27
NEXT STEP	66	NEXT STEP	67	NEXT STEP	68	NEXT STEP	69	NEXT STEP	70	NEXT STEP	71	NEXT STEP	72	NEXT STEP	73

Route 27:73		Route 27:74		Route 27:75		Route 27:76		Route 27:77		Route 27:78		Route 0: 1	
STEP INITIATION		STEP INITIATION		STEP INITIATION		STEP INITIATION		STEP INITIATION		STEP INITIATION		STEP INITIATION	
Go Mode	Auto	Go Mode	Auto	Go Mode	Auto	Go Mode	Auto	Go Mode	Auto	Go Mode	Auto	Go Mode	nput Trigge
Radio Input	dio Input 1-	Radio Input	dio Input 1-	Radio Input	dio Input 1-	Radio Input	dio Input 1-	Radio Input	dio Input 1-	Radio Input	dio Input 1-	Radio Input	dio Input 1-
Hard Wire Input	N/a	Hard Wire Input	N/a	Hard Wire Input	N/a	Hard Wire Input	N/a	Hard Wire Input	N/a	Hard Wire Input	N/a	Hard Wire Input	N/a
BIT	N/A	BIT	N/A	BIT	N/A	BIT	N/A	BIT	N/A	BIT	N/A	BIT	BIT #1-#24
STEP ACTION		STEP ACTION		STEP ACTION		STEP ACTION		STEP ACTION		STEP ACTION		STEP ACTION	
Function	Rotate	Function	Forward	Function	Rotate	Function	Forward	Function	Rotate	Function	Reverse	Function	Auto
Speed	33	Speed	33	Speed	33	Speed	33	Speed	33	Speed	33	Speed	33
Navigation	DR	Navigation	DR	Navigation	DR	Navigation	DR	Navigation	DR	Navigation	DR	Navigation	DR
Direction	Center	Direction	Center	Direction	Center	Direction	Center	Direction	Center	Direction	Center	Direction	Center
Size	-90	Size	525	Size	90	Size	417	Size	-90	Size	66	Size	66
Loss Of Guidance	N/A	Loss Of Guidance	N/A	Loss Of Guidance	N/A	Loss Of Guidance	N/A	Loss Of Guidance	N/A	Loss Of Guidance	N/A	Loss Of Guidance	N/A
Obstacle Avoidance	1	Obstacle Avoidance	1	Obstacle Avoidance	1	Obstacle Avoidance	1	Obstacle Avoidance	1	Obstacle Avoidance	1	Obstacle Avoidance	1
Output	N/a	Output	N/a	Output	N/a	Output	N/a	Output	N/a	Output	N/a	Output	N/a
END OF STEP		END OF STEP		END OF STEP		END OF STEP		END OF STEP		END OF STEP		END OF STEP	
END MODE	Distance	END MODE	Distance	END MODE	Distance	END MODE	Distance	END MODE	Distance	END MODE	Distance	END MODE	Distance
END ACTION	Merge	END ACTION	Merge	END ACTION	Merge	END ACTION	Merge	END ACTION	Merge	END ACTION	Merge	END ACTION	Merge
NEXT ROUTE	27	NEXT ROUTE	27	NEXT ROUTE	27	NEXT ROUTE	27	NEXT ROUTE	27	NEXT ROUTE	0	NEXT ROUTE	0
NEXT STEP	74	NEXT STEP	75	NEXT STEP	76	NEXT STEP	77	NEXT STEP	78	NEXT STEP	1	NEXT STEP	1

Tier 3 Route 28

Route 28:1		Route 28:2		Route 28:3		Route 28:4		Route 28:5		Route 28:6		Route 28:7		Route 28:8	
STEP INITIATION		**STEP INITIATION**		**STEP INITIATION**		**STEP INITIATION**		**STEP INITIATION**		**STEP INITIATION**		**STEP INITIATION**		**STEP INITIATION**	
Go Mode	nput Triggers	**Go Mode**	Auto	**Go Mode**	Auto	**Go Mode**	Auto	**Go Mode**	Auto	**Go Mode**	Auto	**Go Mode**	Auto	**Go Mode**	Auto
Radio Input	adio Input 1-2	**Radio Input**	dio Input 1-	**Radio Input**	dio Input 1-	**Radio Input**	dio Input 1-	**Radio Input**	dio Input 1-	**Radio Input**	dio Input 1-	**Radio Input**	dio Input 1-	**Radio Input**	dio Input 1-
Hard Wire Input	N/A	**Hard Wire Input**	N/A	**Hard Wire Input**	N/A	**Hard Wire Input**	N/A	**Hard Wire Input**	N/A	**Hard Wire Input**	N/A	**Hard Wire Input**	N/A	**Hard Wire Input**	N/A
BIT	Bit #1 off	**BIT**	N/A	**BIT**	N/A	**BIT**	N/A	**BIT**	N/A	**BIT**	N/A	**BIT**	N/A	**BIT**	N/A
Bit#12 On, #23 On	it #5 and 6 Off														
Home Position RFID	it #7 and 9 of														
	t #8 and 10 o														
STEP ACTION		**STEP ACTION**		**STEP ACTION**		**STEP ACTION**		**STEP ACTION**		**STEP ACTION**		**STEP ACTION**		**STEP ACTION**	
Function	Dispatch	**Function**	Forward	**Function**	Rotate	**Function**	Forward	**Function**	Rotate	**Function**	Forward	**Function**	Rotate	**Function**	Forward
Speed	N/A	**Speed**	33	**Speed**	33	**Speed**	33	**Speed**	33	**Speed**	33	**Speed**	33	**Speed**	33
Navigation	N/A	**Navigation**	DR	**Navigation**	DR	**Navigation**	DR	**Navigation**	DR	**Navigation**	DR	**Navigation**	DR	**Navigation**	DR
Direction	N/A	**Direction**	Center	**Direction**	Center	**Direction**	Center	**Direction**	Center	**Direction**	Center	**Direction**	Center	**Direction**	Center
Size	N/A	**Size**	66	**Size**	-90	**Size**	417	**Size**	-90	**Size**	525	**Size**	90	**Size**	962
Loss Of Guidance	N/A	**Loss Of Guidance**	N/A	**Loss Of Guidance**	N/A	**Loss Of Guidance**	N/A	**Loss Of Guidance**	N/A	**Loss Of Guidance**	N/A	**Loss Of Guidance**	N/A	**Loss Of Guidance**	N/A
Obstacle Avoidance	N/A	**Obstacle Avoidance**	1	**Obstacle Avoidance**	1	**Obstacle Avoidance**	1	**Obstacle Avoidance**	1	**Obstacle Avoidance**	1	**Obstacle Avoidance**	1	**Obstacle Avoidance**	1
Output	N/A	**Output**	N/A	**Output**	N/A	**Output**	N/A	**Output**	N/A	**Output**	N/A	**Output**	N/A	**Output**	N/A
END OF STEP		**END OF STEP**		**END OF STEP**		**END OF STEP**		**END OF STEP**		**END OF STEP**		**END OF STEP**		**END OF STEP**	
END MODE	N/A	**END MODE**	Distance	**END MODE**	Distance	**END MODE**	Distance	**END MODE**	Distance	**END MODE**	Distance	**END MODE**	Distance	**END MODE**	Distance
END ACTION	e Bit #12, #2	**END ACTION**	Merge	**END ACTION**	Merge	**END ACTION**	Merge	**END ACTION**	Merge	**END ACTION**	Merge	**END ACTION**	Merge	**END ACTION**	Merge
NEXT ROUTE	28	**NEXT ROUTE**	28	**NEXT ROUTE**	28	**NEXT ROUTE**	28	**NEXT ROUTE**	28	**NEXT ROUTE**	28	**NEXT ROUTE**	28	**NEXT ROUTE**	28
NEXT STEP	**2**	**NEXT STEP**	**3**	**NEXT STEP**	**4**	**NEXT STEP**	**5**	**NEXT STEP**	**6**	**NEXT STEP**	**7**	**NEXT STEP**	**8**	**NEXT STEP**	**9**

Route 28:9		Route 28:10		Route 28:11		Route 28:12		Route 28:13		Route 28:14		Route 28:15		Route 28:16	
STEP INITIATION		**STEP INITIATION**		**STEP INITIATION**		**STEP INITIATION**		**STEP INITIATION**		**STEP INITIATION**		**STEP INITIATION**		**STEP INITIATION**	
Go Mode	Auto	**Go Mode**	Auto	**Go Mode**	Auto	**Go Mode**	Auto	**Go Mode**	Auto	**Go Mode**	Auto	**Go Mode**	Auto	**Go Mode**	Auto
Radio Input	dio Input 1-	**Radio Input**	dio Input 1-	**Radio Input**	dio Input 1-	**Radio Input**	dio Input 1-	**Radio Input**	dio Input 1-	**Radio Input**	dio Input 1-	**Radio Input**	dio Input 1-	**Radio Input**	dio Input 1-
Hard Wire Input	N/A	**Hard Wire Input**	N/A	**Hard Wire Input**	N/A	**Hard Wire Input**	N/A	**Hard Wire Input**	N/A	**Hard Wire Input**	N/A	**Hard Wire Input**	N/A	**Hard Wire Input**	N/A
BIT	N/A	**BIT**	N/A	**BIT**	N/A	**BIT**	N/A	**BIT**	N/A	**BIT**	N/A	**BIT**	N/A	**BIT**	N/A
STEP ACTION		**STEP ACTION**		**STEP ACTION**		**STEP ACTION**		**STEP ACTION**		**STEP ACTION**		**STEP ACTION**		**STEP ACTION**	
Function	Rotate	**Function**	Forward	**Function**	Rotate	**Function**	Forward	**Function**	Rotate	**Function**	Forward	**Function**	Rotate	**Function**	Reverse
Speed	33	**Speed**	33	**Speed**	33	**Speed**	33	**Speed**	33	**Speed**	33	**Speed**	33	**Speed**	33
Navigation	DR	**Navigation**	DR	**Navigation**	DR	**Navigation**	DR	**Navigation**	DR	**Navigation**	DR	**Navigation**	DR	**Navigation**	DR
Direction	Center	**Direction**	Center	**Direction**	Center	**Direction**	Center	**Direction**	Center	**Direction**	Center	**Direction**	Center	**Direction**	Center
Size	-90	**Size**	2284	**Size**	90	**Size**	511	**Size**	90	**Size**	208	**Size**	90	**Size**	62
Loss Of Guidance	N/A	**Loss Of Guidance**	N/A	**Loss Of Guidance**	N/A	**Loss Of Guidance**	N/A	**Loss Of Guidance**	N/A	**Loss Of Guidance**	N/A	**Loss Of Guidance**	N/A	**Loss Of Guidance**	N/A
Obstacle Avoidance	1	**Obstacle Avoidance**	1	**Obstacle Avoidance**	1	**Obstacle Avoidance**	1	**Obstacle Avoidance**	1	**Obstacle Avoidance**	1	**Obstacle Avoidance**	1	**Obstacle Avoidance**	1
Output	N/A	**Output**	N/A	**Output**	N/A	**Output**	N/A	**Output**	N/A	**Output**	N/A	**Output**	N/A	**Output**	#6 Pin Up
END OF STEP		**END OF STEP**		**END OF STEP**		**END OF STEP**		**END OF STEP**		**END OF STEP**		**END OF STEP**		**END OF STEP**	
END MODE	Distance	**END MODE**	Distance	**END MODE**	Distance	**END MODE**	Distance	**END MODE**	Distance	**END MODE**	Distance	**END MODE**	Distance	**END MODE**	Distance
END ACTION	Merge	**END ACTION**	Merge	**END ACTION**	Merge	**END ACTION**	Merge	**END ACTION**	Merge	**END ACTION**	Merge	**END ACTION**	Merge	**END ACTION**	Merge
NEXT ROUTE	28	**NEXT ROUTE**	28	**NEXT ROUTE**	28	**NEXT ROUTE**	28	**NEXT ROUTE**	28	**NEXT ROUTE**	28	**NEXT ROUTE**	28	**NEXT ROUTE**	28
NEXT STEP	**10**	**NEXT STEP**	**11**	**NEXT STEP**	**12**	**NEXT STEP**	**13**	**NEXT STEP**	**14**	**NEXT STEP**	**15**	**NEXT STEP**	**16**	**NEXT STEP**	**17**

Route 28:17		Route 28:18		Route 28:19		Route 28:20		Route 28:21		Route 28:22		Route 28:23		Route 28:24	
STEP INITIATION		**STEP INITIATION**		**STEP INITIATION**		**STEP INITIATION**		**STEP INITIATION**		**STEP INITIATION**		**STEP INITIATION**		**STEP INITIATION**	
Go Mode	Auto	**Go Mode**	Auto	**Go Mode**	Auto	**Go Mode**	Auto	**Go Mode**	Auto	**Go Mode**	Auto	**Go Mode**	Auto	**Go Mode**	Auto
Radio Input	dio Input 1-	**Radio Input**	dio Input 1-	**Radio Input**	dio Input 1-	**Radio Input**	dio Input 1-	**Radio Input**	dio Input 1-	**Radio Input**	dio Input 1-	**Radio Input**	dio Input 1-	**Radio Input**	dio Input 1-
Hard Wire Input	N/A	**Hard Wire Input**	N/A	**Hard Wire Input**	N/A	**Hard Wire Input**	N/A	**Hard Wire Input**	N/A	**Hard Wire Input**	N/A	**Hard Wire Input**	N/A	**Hard Wire Input**	N/A
BIT	N/A	**BIT**	N/A	**BIT**	N/A	**BIT**	N/A	**BIT**	N/A	**BIT**	N/A	**BIT**	N/A	**BIT**	N/A
STEP ACTION		**STEP ACTION**		**STEP ACTION**		**STEP ACTION**		**STEP ACTION**		**EP ACTION**		**STEP ACTION**		**STEP ACTION**	
Function	Forward	**Function**	Rotate	**Function**	Forward	**Function**	Rotate	**Function**	Forward	**Function**	Rotate	**Function**	Forward	**Function**	Rotate
Speed	33	**Speed**	33	**Speed**	33	**Speed**	33	**Speed**	33	**Speed**	33	**Speed**	33	**Speed**	33
Navigation	DR	**Navigation**	DR	**Navigation**	DR	**Navigation**	DR	**Navigation**	DR	**Navigation**	DR	**Navigation**	DR	**Navigation**	DR
Direction	Center	**Direction**	Center	**Direction**	Center	**Direction**	Center	**Direction**	Center	**Direction**	Center	**Direction**	Center	**Direction**	Center
Size	62	**Size**	90	**Size**	208	**Size**	-90	**Size**	511	**Size**	-90	**Size**	2284	**Size**	90
Loss Of Guidance	N/A	**Loss Of Guidance**	N/A	**Loss Of Guidance**	N/A	**Loss Of Guidance**	N/A	**Loss Of Guidance**	N/A	**Loss Of Guidance**	N/A	**Loss Of Guidance**	N/A	**Loss Of Guidance**	N/A
Obstacle Avoidance	1	**Obstacle Avoidance**	1	**Obstacle Avoidance**	1	**Obstacle Avoidance**	1	**Obstacle Avoidance**	1	**Obstacle Avoidance**	1	**Obstacle Avoidance**	1	**Obstacle Avoidance**	1
Output	N/A	**Output**	N/A	**Output**	N/A	**Output**	N/A	**Output**	N/A	**Output**	N/A	**Output**	N/A	**Output**	N/A
END OF STEP		**END OF STEP**		**END OF STEP**		**END OF STEP**		**END OF STEP**		**ID OF STEP**		**END OF STEP**		**END OF STEP**	
END MODE	Distance	**END MODE**	Distance	**END MODE**	Distance	**END MODE**	Distance	**END MODE**	Distance	**END MODE**	Distance	**END MODE**	Distance	**END MODE**	Distance
END ACTION	Merge	**END ACTION**	Merge	**END ACTION**	Merge	**END ACTION**	Merge	**END ACTION**	Merge	**END ACTION**	Merge	**END ACTION**	Merge	**END ACTION**	Merge
NEXT ROUTE	28	**NEXT ROUTE**	28	**NEXT ROUTE**	28	**NEXT ROUTE**	28	**NEXT ROUTE**	28	**NEXT ROUTE**	28	**NEXT ROUTE**	28	**NEXT ROUTE**	28
NEXT STEP	**18**	**NEXT STEP**	**19**	**NEXT STEP**	**20**	**NEXT STEP**	**21**	**NEXT STEP**	**22**	**NEXT STEP**	**23**	**NEXT STEP**	**24**	**NEXT STEP**	**25**

Route 28:25		Route 28:26		Route 28:27		Route 28:28		Route 28:29		Route 28:30		Route 28:31		Route 28:32	
STEP INITIATION		**STEP INITIATION**		**STEP INITIATION**		**STEP INITIATION**		**STEP INITIATION**		**STEP INITIATION**		**STEP INITIATION**		**STEP INITIATION**	
Go Mode	Auto	**Go Mode**	Auto	**Go Mode**	Auto	**Go Mode**	Auto	**Go Mode**	Auto	**Go Mode**	Auto	**Go Mode**	Auto	**Go Mode**	Auto
Radio Input	dio Input 1-	**Radio Input**	dio Input 1-	**Radio Input**	dio Input 1-	**Radio Input**	dio Input 1-	**Radio Input**	dio Input 1-	**Radio Input**	dio Input 1-	**Radio Input**	dio Input 1-	**Radio Input**	dio Input 1-
Hard Wire Input	N/A	**Hard Wire Input**	N/A	**Hard Wire Input**	N/A	**Hard Wire Input**	N/A	**Hard Wire Input**	N/A	**Hard Wire Input**	N/A	**Hard Wire Input**	N/A	**Hard Wire Input**	Cart prese
BIT	N/A	**BIT**	N/A	**BIT**	N/A	**BIT**	N/A	**BIT**	N/A	**BIT**	N/A	**BIT**	N/A	**BIT**	N/A
STEP ACTION		**STEP ACTION**		**STEP ACTION**		**STEP ACTION**		**STEP ACTION**		**STEP ACTION**		**STEP ACTION**		**STEP ACTION**	
Function	Forward	**Function**	Rotate	**Function**	Reverse	**Function**	Delay	**Function**	Forward	**Function**	Rotate	**Function**	Reverse	**Function**	Forward
Speed	33	**Speed**	33	**Speed**	33	**Speed**	33	**Speed**	33	**Speed**	33	**Speed**	33	**Speed**	33
Navigation	DR	**Navigation**	DR	**Navigation**	DR	**Navigation**	DR	**Navigation**	DR	**Navigation**	DR	**Navigation**	DR	**Navigation**	DR
Direction	Center	**Direction**	Center	**Direction**	Center	**Direction**	Center	**Direction**	Center	**Direction**	Center	**Direction**	Center	**Direction**	Center
Size	1240	**Size**	90	**Size**	279	**Size**	5	**Size**	164	**Size**	-90	**Size**	102	**Size**	102
Loss Of Guidance	N/A	**Loss Of Guidance**	N/A	**Loss Of Guidance**	N/A	**Loss Of Guidance**	N/A	**Loss Of Guidance**	N/A	**Loss Of Guidance**	N/A	**Loss Of Guidance**	N/A	**Loss Of Guidance**	N/A
Obstacle Avoidance	1	**Obstacle Avoidance**	1	**Obstacle Avoidance**	1	**Obstacle Avoidance**	1	**Obstacle Avoidance**	1	**Obstacle Avoidance**	1	**Obstacle Avoidance**	1	**Obstacle Avoidance**	1
Output	N/A	**Output**	N/A	**Output**	N/A	**Output**	#7 Pin Drop	**Output**		**Output**		**Output**	#6 pin up	**Output**	N/a
END OF STEP		**END OF STEP**		**END OF STEP**		**END OF STEP**		**END OF STEP**		**END OF STEP**		**END OF STEP**		**END OF STEP**	
END MODE	Distance	**END MODE**	Distance	**END MODE**	Distance	**END MODE**	time	**END MODE**	Distance	**END MODE**	Distance	**END MODE**	Distance	**END MODE**	Distance
END ACTION	Merge	**END ACTION**	Merge	**END ACTION**	Merge	**END ACTION**	Merge	**END ACTION**	Merge	**END ACTION**	Merge	**END ACTION**	Merge	**END ACTION**	Merge
NEXT ROUTE	28	**NEXT ROUTE**	28	**NEXT ROUTE**	28	**NEXT ROUTE**	28	**NEXT ROUTE**	28	**NEXT ROUTE**	28	**NEXT ROUTE**	28	**NEXT ROUTE**	28
NEXT STEP	**26**	**NEXT STEP**	**27**	**NEXT STEP**	**28**	**NEXT STEP**	**29**	**NEXT STEP**	**30**	**NEXT STEP**	**31**	**NEXT STEP**	**32**	**NEXT STEP**	**33**

Route 28:33		Route 28:34		Route 28:35		Route 28:36		Route 28:37		Route 28:38		Route 28:39		Route 28:40	
STEP INITIATION		STEP INITIATION		STEP INITIATION		STEP INITIATION		STEP INITIATION		STEP INITIATION		STEP INITIATION		STEP INITIATION	
Go Mode	Auto	Go Mode	Auto	Go Mode	Auto	Go Mode	Auto	Go Mode	Auto	Go Mode	Auto	Go Mode	Auto	Go Mode	Auto
Radio Input	dio Input 1-	Radio Input	dio Input 1-	Radio Input	dio Input 1-	Radio Input	dio Input 1-	Radio Input	dio Input 1-	Radio Input	dio Input 1-	Radio Input	dio Input 1-	Radio Input	dio Input 1-
Hard Wire Input	N/A	Hard Wire Input	N/A	Hard Wire Input	N/A	Hard Wire Input	N/A	Hard Wire Input	N/A	Hard Wire Input	N/A	Hard Wire Input	N/A	Hard Wire Input	N/A
BIT	N/A	BIT	N/A	BIT	N/A	BIT	N/A	BIT	N/A	BIT	N/A	BIT	N/A	BIT	N/A
STEP ACTION		STEP ACTION		STEP ACTION		STEP ACTION		STEP ACTION		STEP ACTION		STEP ACTION		STEP ACTION	
Function	Rotate	Function	Reverse	Function	Rotate	Function	Reverse	Function	Delay	Function	Forward	Function	Rotate	Function	Reverse
Speed	33	Speed	33	Speed	33	Speed	33	Speed	33	Speed	33	Speed	33	Speed	33
Navigation	DR	Navigation	DR	Navigation	DR	Navigation	DR	Navigation	DR	Navigation	DR	Navigation	DR	Navigation	DR
Direction	Center	Direction	Center	Direction	Center	Direction	Center	Direction	Center	Direction	Center	Direction	Center	Direction	Center
Size	90	Size	60	Size	-45	Size	99	Size	5	Size	99	Size	45	Size	104
Loss Of Guidance	N/A	Loss Of Guidance	N/A	Loss Of Guidance	N/A	Loss Of Guidance	N/A	Loss Of Guidance	N/A	Loss Of Guidance	N/A	Loss Of Guidance	N/A	Loss Of Guidance	N/A
Obstacle Avoidance	1	Obstacle Avoidance	1	Obstacle Avoidance	1	Obstacle Avoidance	1	Obstacle Avoidance	1	Obstacle Avoidance	1	Obstacle Avoidance	1	Obstacle Avoidance	1
Output	N/a	Output	N/a	Output	N/a	Output	N/a	Output	#7 pin drop	Output	N/a	Output	N/a	Output	#7 pin raise
END OF STEP		END OF STEP		END OF STEP		END OF STEP		END OF STEP		END OF STEP		END OF STEP		END OF STEP	
END MODE	Distance	END MODE	Distance	END MODE	Distance	END MODE	Distance	END MODE	time	END MODE	Distance	END MODE	Distance	END MODE	Distance
END ACTION	Merge	END ACTION	Merge	END ACTION	Merge	END ACTION	Merge	END ACTION	Merge	END ACTION	Merge	END ACTION	Merge	END ACTION	Merge
NEXT ROUTE	28	NEXT ROUTE	28	NEXT ROUTE	28	NEXT ROUTE	28	NEXT ROUTE	28	NEXT ROUTE	28	NEXT ROUTE	28	NEXT ROUTE	28
NEXT STEP	34	NEXT STEP	35	NEXT STEP	36	NEXT STEP	37	NEXT STEP	38	NEXT STEP	39	NEXT STEP	40	NEXT STEP	41

Route 28:41		Route 28:42		Route 28:43		Route 28:44		Route 28:45		Route 28:46		Route 28:47		Route 28:48	
STEP INITIATION		STEP INITIATION		STEP INITIATION		STEP INITIATION		STEP INITIATION		STEP INITIATION		STEP INITIATION		STEP INITIATION	
Go Mode	Auto	Go Mode	Auto	Go Mode	Auto	Go Mode	Auto	Go Mode	Auto	Go Mode	Auto	Go Mode	Auto	Go Mode	Auto
Radio Input	dio Input 1-	Radio Input	dio Input 1-	Radio Input	dio Input 1-	Radio Input	dio Input 1-	Radio Input	dio Input 1-	Radio Input	dio Input 1-	Radio Input	dio Input 1-	Radio Input	dio Input 1-
Hard Wire Input	N/A	Hard Wire Input	N/A	Hard Wire Input	N/A	Hard Wire Input	N/A	Hard Wire Input	N/A	Hard Wire Input	N/A	Hard Wire Input	N/A	Hard Wire Input	N/A
BIT	N/A	BIT	N/A	BIT	N/A	BIT	N/A	BIT	N/A	BIT	N/A	BIT	N/A	BIT	N/A
STEP ACTION		STEP ACTION		STEP ACTION		STEP ACTION		STEP ACTION		STEP ACTION		STEP ACTION		STEP ACTION	
Function	Forward	Function	Rotate	Function	Reverse	Function	Delay	Function	Forward	Function	Rotate	Function	Reverse	Function	Rotate
Speed	33	Speed	33	Speed	33	Speed	33	Speed	33	Speed	33	Speed	33	Speed	33
Navigation	DR	Navigation	DR	Navigation	DR	Navigation	DR	Navigation	DR	Navigation	DR	Navigation	DR	Navigation	DR
Direction	Center	Direction	Center	Direction	Center	Direction	Center	Direction	Center	Direction	Center	Direction	Center	Direction	Center
Size	164	Size	-90	Size	102	Size	5	Size	102	Size	90	Size	60	Size	-45
Loss Of Guidance	N/A	Loss Of Guidance	N/A	Loss Of Guidance	N/A	Loss Of Guidance	N/A	Loss Of Guidance	N/A	Loss Of Guidance	N/A	Loss Of Guidance	N/A	Loss Of Guidance	N/A
Obstacle Avoidance	1	Obstacle Avoidance	1	Obstacle Avoidance	1	Obstacle Avoidance	1	Obstacle Avoidance	1	Obstacle Avoidance	1	Obstacle Avoidance	1	Obstacle Avoidance	1
Output	N/A	Output	N/A	Output	N/A	Output	#7 Pin Drop	Output	N/a	Output	N/a	Output	N/a	Output	N/a
END OF STEP		END OF STEP		END OF STEP		END OF STEP		END OF STEP		END OF STEP		END OF STEP		END OF STEP	
END MODE	Distance	END MODE	Distance	END MODE	Distance	END MODE	Time	END MODE	Distance	END MODE	Distance	END MODE	Distance	END MODE	Distance
END ACTION	Merge	END ACTION	Merge	END ACTION	Merge	END ACTION	Merge	END ACTION	Merge	END ACTION	Merge	END ACTION	Merge	END ACTION	Merge
NEXT ROUTE	28	NEXT ROUTE	28	NEXT ROUTE	28	NEXT ROUTE	28	NEXT ROUTE	28	NEXT ROUTE	28	NEXT ROUTE	28	NEXT ROUTE	28
NEXT STEP	42	NEXT STEP	43	NEXT STEP	44	NEXT STEP	45	NEXT STEP	46	NEXT STEP	47	NEXT STEP	48	NEXT STEP	49

Route 28:49		Route 28:50		Route 28:51		Route 28:52		Route 28:53		Route 28:54		Route 28:55		Route 28:56	
STEP INITIATION		STEP INITIATION		STEP INITIATION		STEP INITIATION		STEP INITIATION		STEP INITIATION		STEP INITIATION		STEP INITIATION	
Go Mode	Auto	Go Mode	Auto	Go Mode	Auto	Go Mode	Auto	Go Mode	Auto	Go Mode	Auto	Go Mode	Auto	Go Mode	Auto
Radio Input	dio Input 1-	Radio Input	dio Input 1-	Radio Input	dio Input 1-	Radio Input	dio Input 1-	Radio Input	dio Input 1-	Radio Input	dio Input 1-	Radio Input	dio Input 1-	Radio Input	dio Input 1-
Hard Wire Input	N/A	Hard Wire Input	Cart Prese	Hard Wire Input		Hard Wire Input		Hard Wire Input		Hard Wire Input		Hard Wire Input		Hard Wire Input	
BIT	N/A	BIT	N/A	BIT	N/A	BIT	N/A	BIT	N/A	BIT	N/A	BIT	N/A	BIT	N/A
STEP ACTION		STEP ACTION		STEP ACTION		STEP ACTION		STEP ACTION		STEP ACTION		STEP ACTION		STEP ACTION	
Function	Reverse	Function	Forward	Function	Rotate	Function	Forward	Function	Rotate	Function	Forward	Function	Rotate	Function	Forward
Speed	33	Speed	33	Speed	33	Speed	33	Speed	33	Speed	33	Speed	33	Speed	33
Navigation	DR	Navigation	DR	Navigation	DR	Navigation	DR	Navigation	DR	Navigation	DR	Navigation	DR	Navigation	DR
Direction	Center	Direction	Center	Direction	Center	Direction	Center	Direction	Center	Direction	Center	Direction	Center	Direction	Center
Size	99	Size	99	Size	45	Size	174	Size	90	Size	1240	Size	-90	Size	2284
Loss Of Guidance	N/A	Loss Of Guidance	N/A	Loss Of Guidance	N/A	Loss Of Guidance	N/A	Loss Of Guidance	N/A	Loss Of Guidance	N/A	Loss Of Guidance	N/A	Loss Of Guidance	N/A
Obstacle Avoidance	1	Obstacle Avoidance	1	Obstacle Avoidance	1	Obstacle Avoidance	1	Obstacle Avoidance	1	Obstacle Avoidance	1	Obstacle Avoidance	1	Obstacle Avoidance	1
Output	#6 Pin Raise	Output	N/a	Output	N/a	Output	N/a	Output	N/a	Output	N/a	Output	N/a	Output	N/a
END OF STEP		END OF STEP		END OF STEP		END OF STEP		END OF STEP		END OF STEP		END OF STEP		END OF STEP	
END MODE	Distance	END MODE	Distance	END MODE	Distance	END MODE	Distance	END MODE	Distance	END MODE	Distance	END MODE	Distance	END MODE	Distance
END ACTION	Merge	END ACTION	Merge	END ACTION	Merge	END ACTION	Merge	END ACTION	Merge	END ACTION	Merge	END ACTION	Merge	END ACTION	Merge
NEXT ROUTE	28	NEXT ROUTE	28	NEXT ROUTE	28	NEXT ROUTE	28	NEXT ROUTE	28	NEXT ROUTE	28	NEXT ROUTE	28	NEXT ROUTE	28
NEXT STEP	50	NEXT STEP	51	NEXT STEP	52	NEXT STEP	53	NEXT STEP	54	NEXT STEP	55	NEXT STEP	56	NEXT STEP	57

Route 28:57		Route 28:58		Route 28:59		Route 28:60		Route 28:61		Route 28:62		Route 28:63		Route 28:64	
STEP INITIATION		STEP INITIATION		STEP INITIATION		STEP INITIATION		STEP INITIATION		STEP INITIATION		STEP INITIATION		STEP INITIATION	
Go Mode	Auto	Go Mode	Auto	Go Mode	Auto	Go Mode	Auto	Go Mode	Auto	Go Mode	Auto	Go Mode	Auto	Go Mode	Auto
Radio Input	dio Input 1-	Radio Input	dio Input 1-	Radio Input	dio Input 1-	Radio Input	dio Input 1-	Radio Input	dio Input 1-	Radio Input	dio Input 1-	Radio Input	dio Input 1-	Radio Input	dio Input 1-
Hard Wire Input		Hard Wire Input		Hard Wire Input		Hard Wire Input		Hard Wire Input		Hard Wire Input		Hard Wire Input		Hard Wire Input	
BIT	N/A	BIT	N/A	BIT	N/A	BIT	N/A	BIT	N/A	BIT	N/A	BIT	N/A	BIT	N/A
STEP ACTION		STEP ACTION		STEP ACTION		STEP ACTION		STEP ACTION		STEP ACTION		STEP ACTION		STEP ACTION	
Function	Rotate	Function	Forward	Function	Rotate	Function	Forward	Function	Rotate	Function	Reverse	Function	Dellay	Function	Forward
Speed	33	Speed	33	Speed	33	Speed	33	Speed	33	Speed	33	Speed	33	Speed	33
Navigation	DR	Navigation	DR	Navigation	DR	Navigation	DR	Navigation	DR	Navigation	DR	Navigation	DR	Navigation	DR
Direction	Center	Direction	Center	Direction	Center	Direction	Center	Direction	Center	Direction	Center	Direction	Center	Direction	Center
Size	90	Size	511	Size	90	Size	208	Size	90	Size	62	Size	5	Size	62
Loss Of Guidance	N/A	Loss Of Guidance	N/A	Loss Of Guidance	N/A	Loss Of Guidance	N/A	Loss Of Guidance	N/A	Loss Of Guidance	N/A	Loss Of Guidance	N/A	Loss Of Guidance	N/A
Obstacle Avoidance	1	Obstacle Avoidance	1	Obstacle Avoidance	1	Obstacle Avoidance	1	Obstacle Avoidance	1	Obstacle Avoidance	1	Obstacle Avoidance	1	Obstacle Avoidance	1
Output	N/a	Output	N/a	Output	N/a	Output	N/a	Output	N/a	Output	N/a	Output	#7 Pin Drop	Output	
END OF STEP		END OF STEP		END OF STEP		END OF STEP		END OF STEP		END OF STEP		END OF STEP		END OF STEP	
END MODE	Distance	END MODE	Distance	END MODE	Distance	END MODE	Distance	END MODE	Distance	END MODE	Distance	END MODE	time	END MODE	Distance
END ACTION	Merge	END ACTION	Merge	END ACTION	Merge	END ACTION	Merge	END ACTION	Merge	END ACTION	Merge	END ACTION	Merge	END ACTION	Merge
NEXT ROUTE	28	NEXT ROUTE	28	NEXT ROUTE	28	NEXT ROUTE	28	NEXT ROUTE	28	NEXT ROUTE	28	NEXT ROUTE	28	NEXT ROUTE	28
NEXT STEP	58	NEXT STEP	59	NEXT STEP	60	NEXT STEP	61	NEXT STEP	62	NEXT STEP	63	NEXT STEP	64	NEXT STEP	65

Route 28:65		Route 28:66		Route 28:67		Route 28:68		Route 28:69		Route 28:70		Route 28:71		Route 28:72	
STEP INITIATION		STEP INITIATION		STEP INITIATION		STEP INITIATION		STEP INITIATION		STEP INITIATION		STEP INITIATION		STEP INITIATION	
Go Mode	Auto	Go Mode	Auto	Go Mode	Auto	Go Mode	Auto	Go Mode	Auto	Go Mode	Auto	Go Mode	Auto	Go Mode	Auto
Radio Input	dio Input 1-	Radio Input	dio Input 1-	Radio Input	dio Input 1-	Radio Input	dio Input 1-	Radio Input	dio Input 1-	Radio Input	dio Input 1-	Radio Input	dio Input 1-	Radio Input	dio Input 1-
Hard Wire Input		Hard Wire Input		Hard Wire Input		Hard Wire Input		Hard Wire Input		Hard Wire Input		Hard Wire Input	N/a	Hard Wire Input	N/a
BIT	N/A	BIT	N/A	BIT	N/A	BIT	N/A	BIT	N/A	BIT	N/A	BIT	N/A	BIT	N/A
STEP ACTION		STEP ACTION		STEP ACTION		STEP ACTION		STEP ACTION		STEP ACTION		STEP ACTION		STEP ACTION	
Function	Rotate	Function	Forward	Function	Rotate	Function	Forward	Function	Rotate	Function	Forward	Function	Rotate	Function	Forward
Speed	33	Speed	33	Speed	33	Speed	33	Speed	33	Speed	33	Speed	33	Speed	33
Navigation	DR	Navigation	DR	Navigation	DR	Navigation	DR	Navigation	DR	Navigation	DR	Navigation	DR	Navigation	DR
Direction	Center	Direction	Center	Direction	Center	Direction	Center	Direction	Center	Direction	Center	Direction	Center	Direction	Center
Size	90	Size	208	Size	-90	Size	511	Size	-90	Size	2284	Size	90	Size	962
Loss Of Guidance	N/A	Loss Of Guidance	N/A	Loss Of Guidance	N/A	Loss Of Guidance	N/A	Loss Of Guidance	N/A	Loss Of Guidance	N/A	Loss Of Guidance	N/A	Loss Of Guidance	N/A
Obstacle Avoidance	1	Obstacle Avoidance	1	Obstacle Avoidance	1	Obstacle Avoidance	1	Obstacle Avoidance	1	Obstacle Avoidance	1	Obstacle Avoidance	1	Obstacle Avoidance	1
Output		Output		Output		Output		Output		Output		Output	N/a	Output	N/a
END OF STEP		END OF STEP		END OF STEP		END OF STEP		END OF STEP		END OF STEP		END OF STEP		END OF STEP	
END MODE	Distance	END MODE	Distance	END MODE	Distance	END MODE	Distance	END MODE	Distance	END MODE	Distance	END MODE	Distance	END MODE	Distance
END ACTION	Merge	END ACTION	Merge	END ACTION	Merge	END ACTION	Merge	END ACTION	Merge	END ACTION	Merge	END ACTION	Merge	END ACTION	Merge
NEXT ROUTE	28	NEXT ROUTE	28	NEXT ROUTE	28	NEXT ROUTE	28	NEXT ROUTE	28	NEXT ROUTE	28	NEXT ROUTE	28	NEXT ROUTE	28
NEXT STEP	66	NEXT STEP	67	NEXT STEP	68	NEXT STEP	69	NEXT STEP	70	NEXT STEP	71	NEXT STEP	72	NEXT STEP	73

Route 28:73		Route 28:74		Route 28:75		Route 28:76		Route 28:77		Route 28:78		Route 0: 1	
STEP INITIATION		STEP INITIATION		STEP INITIATION		STEP INITIATION		STEP INITIATION		STEP INITIATION		STEP INITIATION	
Go Mode	Auto	Go Mode	Auto	Go Mode	Auto	Go Mode	Auto	Go Mode	Auto	Go Mode	Auto	Go Mode	nput Trigge
Radio Input	dio Input 1-	Radio Input	dio Input 1-	Radio Input	dio Input 1-	Radio Input	dio Input 1-	Radio Input	dio Input 1-	Radio Input	dio Input 1-	Radio Input	dio Input 1-
Hard Wire Input	N/a	Hard Wire Input	N/a	Hard Wire Input	N/a	Hard Wire Input	N/a	Hard Wire Input	N/a	Hard Wire Input	N/a	Hard Wire Input	N/a
BIT	N/A	BIT	N/A	BIT	N/A	BIT	N/A	BIT	N/A	BIT	N/A	BIT	BIT #1-#24
STEP ACTION		STEP ACTION		STEP ACTION		STEP ACTION		STEP ACTION		STEP ACTION		STEP ACTION	
Function	Rotate	Function	Forward	Function	Rotate	Function	Forward	Function	Rotate	Function	Reverse	Function	Auto
Speed	33	Speed	33	Speed	33	Speed	33	Speed	33	Speed	33	Speed	33
Navigation	DR	Navigation	DR	Navigation	DR	Navigation	DR	Navigation	DR	Navigation	DR	Navigation	DR
Direction	Center	Direction	Center	Direction	Center	Direction	Center	Direction	Center	Direction	Center	Direction	Center
Size	-90	Size	525	Size	90	Size	417	Size	-90	Size	66	Size	66
Loss Of Guidance	N/A	Loss Of Guidance	N/A	Loss Of Guidance	N/A	Loss Of Guidance	N/A	Loss Of Guidance	N/A	Loss Of Guidance	N/A	Loss Of Guidance	N/A
Obstacle Avoidance	1	Obstacle Avoidance	1	Obstacle Avoidance	1	Obstacle Avoidance	1	Obstacle Avoidance	1	Obstacle Avoidance	1	Obstacle Avoidance	1
Output	N/a	Output	N/a	Output	N/a	Output	N/a	Output	N/a	Output	N/a	Output	N/a
END OF STEP		END OF STEP		END OF STEP		END OF STEP		END OF STEP		END OF STEP		END OF STEP	
END MODE	Distance	END MODE	Distance	END MODE	Distance	END MODE	Distance	END MODE	Distance	END MODE	Distance	END MODE	Distance
END ACTION	Merge	END ACTION	Merge	END ACTION	Merge	END ACTION	Merge	END ACTION	Merge	END ACTION	Merge	END ACTION	Merge
NEXT ROUTE	28	NEXT ROUTE	28	NEXT ROUTE	28	NEXT ROUTE	28	NEXT ROUTE	28	NEXT ROUTE	0	NEXT ROUTE	0
NEXT STEP	74	NEXT STEP	75	NEXT STEP	76	NEXT STEP	77	NEXT STEP	78	NEXT STEP	1	NEXT STEP	1

Tier 3 Route 29

Route 29:1		Route 29:2		Route 29:3		Route 29:4		Route 29:5		Route 29:6		Route 29:7		Route 29:8	
STEP INITIATION		**STEP INITIATION**		**STEP INITIATION**		**STEP INITIATION**		**STEP INITIATION**		**STEP INITIATION**		**STEP INITIATION**		**STEP INITIATION**	
Go Mode	nput Triggers	**Go Mode**	Auto	**Go Mode**	Auto	**Go Mode**	Auto	**Go Mode**	Auto	**Go Mode**	Auto	**Go Mode**	Auto	**Go Mode**	Auto
Radio Input	adio Input 1-2	**Radio Input**	dio Input 1-	**Radio Input**	dio Input 1-	**Radio Input**	dio Input 1-	**Radio Input**	dio Input 1-	**Radio Input**	dio Input 1-	**Radio Input**	dio Input 1-	**Radio Input**	dio Input 1-
Hard Wire Input	N/A	**Hard Wire Input**	N/A	**Hard Wire Input**	N/A	**Hard Wire Input**	N/A	**Hard Wire Input**	N/A	**Hard Wire Input**	N/A	**Hard Wire Input**	N/A	**Hard Wire Input**	N/A
BIT	Bit #1 off	**BIT**	N/A	**BIT**	N/A	**BIT**	N/A	**BIT**	N/A	**BIT**	N/A	**BIT**	N/A	**BIT**	N/A
Bit#12 On, #24 On	it #5 and 6 Off														
Home Position RFID	it #7 and 9 of														
	t #8 and 10 o														
STEP ACTION		**STEP ACTION**		**STEP ACTION**		**STEP ACTION**		**STEP ACTION**		**STEP ACTION**		**STEP ACTION**		**STEP ACTION**	
Function	Dispatch	**Function**	Forward	**Function**	Rotate	**Function**	Forward	**Function**	Rotate	**Function**	Forward	**Function**	Rotate	**Function**	Forward
Speed	N/A	**Speed**	33	**Speed**	33	**Speed**	33	**Speed**	33	**Speed**	33	**Speed**	33	**Speed**	33
Navigation	N/A	**Navigation**	DR	**Navigation**	DR	**Navigation**	DR	**Navigation**	DR	**Navigation**	DR	**Navigation**	DR	**Navigation**	DR
Direction	N/A	**Direction**	Center	**Direction**	Center	**Direction**	Center	**Direction**	Center	**Direction**	Center	**Direction**	Center	**Direction**	Center
Size	N/A	**Size**	66	**Size**	-90	**Size**	417	**Size**	-90	**Size**	525	**Size**	90	**Size**	962
Loss Of Guidance	N/A	**Loss Of Guidance**	N/A	**Loss Of Guidance**	N/A	**Loss Of Guidance**	N/A	**Loss Of Guidance**	N/A	**Loss Of Guidance**	N/A	**Loss Of Guidance**	N/A	**Loss Of Guidance**	N/A
Obstacle Avoidance	N/A	**Obstacle Avoidance**	1	**Obstacle Avoidance**	1	**Obstacle Avoidance**	1	**Obstacle Avoidance**	1	**Obstacle Avoidance**	1	**Obstacle Avoidance**	1	**Obstacle Avoidance**	1
Output	N/A	**Output**	N/A	**Output**	N/A	**Output**	N/A	**Output**	N/A	**Output**	N/A	**Output**	N/A	**Output**	N/A
END OF STEP		**END OF STEP**		**END OF STEP**		**END OF STEP**		**END OF STEP**		**END OF STEP**		**END OF STEP**		**END OF STEP**	
END MODE	N/A	**END MODE**	Distance	**END MODE**	Distance	**END MODE**	Distance	**END MODE**	Distance	**END MODE**	Distance	**END MODE**	Distance	**END MODE**	Distance
END ACTION	e Bit #12, #2	**END ACTION**	Merge	**END ACTION**	Merge	**END ACTION**	Merge	**END ACTION**	Merge	**END ACTION**	Merge	**END ACTION**	Merge	**END ACTION**	Merge
NEXT ROUTE	29	**NEXT ROUTE**	29	**NEXT ROUTE**	29	**NEXT ROUTE**	29	**NEXT ROUTE**	29	**NEXT ROUTE**	29	**NEXT ROUTE**	29	**NEXT ROUTE**	29
NEXT STEP	**2**	**NEXT STEP**	**3**	**NEXT STEP**	**4**	**NEXT STEP**	**5**	**NEXT STEP**	**6**	**NEXT STEP**	**7**	**NEXT STEP**	**8**	**NEXT STEP**	**9**

Route 29:9		Route 29:10		Route 29:11		Route 29:12		Route 29:13		Route 29:14		Route 29:15		Route 29:16	
STEP INITIATION		**STEP INITIATION**		**STEP INITIATION**		**STEP INITIATION**		**STEP INITIATION**		**STEP INITIATION**		**STEP INITIATION**		**STEP INITIATION**	
Go Mode	Auto	**Go Mode**	Auto	**Go Mode**	Auto	**Go Mode**	Auto	**Go Mode**	Auto	**Go Mode**	Auto	**Go Mode**	Auto	**Go Mode**	Auto
Radio Input	dio Input 1-	**Radio Input**	dio Input 1-	**Radio Input**	dio Input 1-	**Radio Input**	dio Input 1-	**Radio Input**	dio Input 1-	**Radio Input**	dio Input 1-	**Radio Input**	dio Input 1-	**Radio Input**	dio Input 1-
Hard Wire Input	N/A	**Hard Wire Input**	N/A	**Hard Wire Input**	N/A	**Hard Wire Input**	N/A	**Hard Wire Input**	N/A	**Hard Wire Input**	N/A	**Hard Wire Input**	N/A	**Hard Wire Input**	N/A
BIT	N/A	**BIT**	N/A	**BIT**	N/A	**BIT**	N/A	**BIT**	N/A	**BIT**	N/A	**BIT**	N/A	**BIT**	N/A
STEP ACTION		**STEP ACTION**		**STEP ACTION**		**STEP ACTION**		**STEP ACTION**		**STEP ACTION**		**STEP ACTION**		**STEP ACTION**	
Function	Rotate	**Function**	Forward	**Function**	Rotate	**Function**	Forward	**Function**	Rotate	**Function**	Forward	**Function**	Rotate	**Function**	Reverse
Speed	33	**Speed**	33	**Speed**	33	**Speed**	33	**Speed**	33	**Speed**	33	**Speed**	33	**Speed**	33
Navigation	DR	**Navigation**	DR	**Navigation**	DR	**Navigation**	DR	**Navigation**	DR	**Navigation**	DR	**Navigation**	DR	**Navigation**	DR
Direction	Center	**Direction**	Center	**Direction**	Center	**Direction**	Center	**Direction**	Center	**Direction**	Center	**Direction**	Center	**Direction**	Center
Size	-90	**Size**	2284	**Size**	90	**Size**	511	**Size**	90	**Size**	274	**Size**	90	**Size**	62
Loss Of Guidance	N/A	**Loss Of Guidance**	N/A	**Loss Of Guidance**	N/A	**Loss Of Guidance**	N/A	**Loss Of Guidance**	N/A	**Loss Of Guidance**	N/A	**Loss Of Guidance**	N/A	**Loss Of Guidance**	N/A
Obstacle Avoidance	1	**Obstacle Avoidance**	1	**Obstacle Avoidance**	1	**Obstacle Avoidance**	1	**Obstacle Avoidance**	1	**Obstacle Avoidance**	1	**Obstacle Avoidance**	1	**Obstacle Avoidance**	1
Output	N/A	**Output**	N/A	**Output**	N/A	**Output**	N/A	**Output**	N/A	**Output**	N/A	**Output**	N/A	**Output**	#6 Pin Up
END OF STEP		**END OF STEP**		**END OF STEP**		**END OF STEP**		**END OF STEP**		**END OF STEP**		**END OF STEP**		**END OF STEP**	
END MODE	Distance	**END MODE**	Distance	**END MODE**	Distance	**END MODE**	Distance	**END MODE**	Distance	**END MODE**	Distance	**END MODE**	Distance	**END MODE**	Distance
END ACTION	Merge	**END ACTION**	Merge	**END ACTION**	Merge	**END ACTION**	Merge	**END ACTION**	Merge	**END ACTION**	Merge	**END ACTION**	Merge	**END ACTION**	Merge
NEXT ROUTE	29	**NEXT ROUTE**	29	**NEXT ROUTE**	29	**NEXT ROUTE**	29	**NEXT ROUTE**	29	**NEXT ROUTE**	29	**NEXT ROUTE**	29	**NEXT ROUTE**	29
NEXT STEP	**10**	**NEXT STEP**	**11**	**NEXT STEP**	**12**	**NEXT STEP**	**13**	**NEXT STEP**	**14**	**NEXT STEP**	**15**	**NEXT STEP**	**16**	**NEXT STEP**	**17**

Route 29:17		Route 29:18		Route 29:19		Route 29:20		Route 29:21		Route 29:22		Route 29:23		Route 29:24	
STEP INITIATION		**STEP INITIATION**		**STEP INITIATION**		**STEP INITIATION**		**STEP INITIATION**		**STEP INITIATION**		**STEP INITIATION**		**STEP INITIATION**	
Go Mode	Auto	**Go Mode**	Auto	**Go Mode**	Auto	**Go Mode**	Auto	**Go Mode**	Auto	**Go Mode**	Auto	**Go Mode**	Auto	**Go Mode**	Auto
Radio Input	dio Input 1-	**Radio Input**	dio Input 1-	**Radio Input**	dio Input 1-	**Radio Input**	dio Input 1-	**Radio Input**	dio Input 1-	**Radio Input**	dio Input 1-	**Radio Input**	dio Input 1-	**Radio Input**	dio Input 1-
Hard Wire Input	N/A	**Hard Wire Input**	N/A	**Hard Wire Input**	N/A	**Hard Wire Input**	N/A	**Hard Wire Input**	N/A	**Hard Wire Input**	N/A	**Hard Wire Input**	N/A	**Hard Wire Input**	N/A
BIT	N/A	**BIT**	N/A	**BIT**	N/A	**BIT**	N/A	**BIT**	N/A	**BIT**	N/A	**BIT**	N/A	**BIT**	N/A
STEP ACTION		**STEP ACTION**		**STEP ACTION**		**STEP ACTION**		**STEP ACTION**		**EP ACTION**		**STEP ACTION**		**STEP ACTION**	
Function	Forward	**Function**	Rotate	**Function**	Forward	**Function**	Rotate	**Function**	Forward	**Function**	Rotate	**Function**	Forward	**Function**	Rotate
Speed	33	**Speed**	33	**Speed**	33	**Speed**	33	**Speed**	33	**Speed**	33	**Speed**	33	**Speed**	33
Navigation	DR	**Navigation**	DR	**Navigation**	DR	**Navigation**	DR	**Navigation**	DR	**Navigation**	DR	**Navigation**	DR	**Navigation**	DR
Direction	Center	**Direction**	Center	**Direction**	Center	**Direction**	Center	**Direction**	Center	**Direction**	Center	**Direction**	Center	**Direction**	Center
Size	62	**Size**	90	**Size**	274	**Size**	-90	**Size**	511	**Size**	-90	**Size**	2284	**Size**	90
Loss Of Guidance	N/A	**Loss Of Guidance**	N/A	**Loss Of Guidance**	N/A	**Loss Of Guidance**	N/A	**Loss Of Guidance**	N/A	**Loss Of Guidance**	N/A	**Loss Of Guidance**	N/A	**Loss Of Guidance**	N/A
Obstacle Avoidance	1	**Obstacle Avoidance**	1	**Obstacle Avoidance**	1	**Obstacle Avoidance**	1	**Obstacle Avoidance**	1	**Obstacle Avoidance**	1	**Obstacle Avoidance**	1	**Obstacle Avoidance**	1
Output	N/A	**Output**	N/A	**Output**	N/A	**Output**	N/A	**Output**	N/A	**Output**	N/A	**Output**	N/A	**Output**	N/A
END OF STEP		**END OF STEP**		**END OF STEP**		**END OF STEP**		**END OF STEP**		**ID OF STEP**		**END OF STEP**		**END OF STEP**	
END MODE	Distance	**END MODE**	Distance	**END MODE**	Distance	**END MODE**	Distance	**END MODE**	Distance	**END MODE**	Distance	**END MODE**	Distance	**END MODE**	Distance
END ACTION	Merge	**END ACTION**	Merge	**END ACTION**	Merge	**END ACTION**	Merge	**END ACTION**	Merge	**END ACTION**	Merge	**END ACTION**	Merge	**END ACTION**	Merge
NEXT ROUTE	29	**NEXT ROUTE**	29	**NEXT ROUTE**	29	**NEXT ROUTE**	29	**NEXT ROUTE**	29	**NEXT ROUTE**	29	**NEXT ROUTE**	29	**NEXT ROUTE**	29
NEXT STEP	**18**	**NEXT STEP**	**19**	**NEXT STEP**	**20**	**NEXT STEP**	**21**	**NEXT STEP**	**22**	**NEXT STEP**	**23**	**NEXT STEP**	**24**	**NEXT STEP**	**25**

Route 29:25		Route 29:26		Route 29:27		Route 29:28		Route 29:29		Route 29:30		Route 29:31		Route 29:32	
STEP INITIATION		**STEP INITIATION**		**STEP INITIATION**		**STEP INITIATION**		**STEP INITIATION**		**STEP INITIATION**		**STEP INITIATION**		**STEP INITIATION**	
Go Mode	Auto	**Go Mode**	Auto	**Go Mode**	Auto	**Go Mode**	Auto	**Go Mode**	Auto	**Go Mode**	Auto	**Go Mode**	Auto	**Go Mode**	Auto
Radio Input	dio Input 1-	**Radio Input**	dio Input 1-	**Radio Input**	dio Input 1-	**Radio Input**	dio Input 1-	**Radio Input**	dio Input 1-	**Radio Input**	dio Input 1-	**Radio Input**	dio Input 1-	**Radio Input**	dio Input 1-
Hard Wire Input	N/A	**Hard Wire Input**	N/A	**Hard Wire Input**	N/A	**Hard Wire Input**	N/A	**Hard Wire Input**	N/A	**Hard Wire Input**	N/A	**Hard Wire Input**	N/A	**Hard Wire Input**	Cart prese
BIT	N/A	**BIT**	N/A	**BIT**	N/A	**BIT**	N/A	**BIT**	N/A	**BIT**	N/A	**BIT**	N/A	**BIT**	N/A
STEP ACTION		**STEP ACTION**		**STEP ACTION**		**STEP ACTION**		**STEP ACTION**		**STEP ACTION**		**STEP ACTION**		**STEP ACTION**	
Function	Forward	**Function**	Rotate	**Function**	Reverse	**Function**	Delay	**Function**	Forward	**Function**	Rotate	**Function**	Reverse	**Function**	Forward
Speed	33	**Speed**	33	**Speed**	33	**Speed**	33	**Speed**	33	**Speed**	33	**Speed**	33	**Speed**	33
Navigation	DR	**Navigation**	DR	**Navigation**	DR	**Navigation**	DR	**Navigation**	DR	**Navigation**	DR	**Navigation**	DR	**Navigation**	DR
Direction	Center	**Direction**	Center	**Direction**	Center	**Direction**	Center	**Direction**	Center	**Direction**	Center	**Direction**	Center	**Direction**	Center
Size	1240	**Size**	90	**Size**	279	**Size**	5	**Size**	164	**Size**	-90	**Size**	102	**Size**	102
Loss Of Guidance	N/A	**Loss Of Guidance**	N/A	**Loss Of Guidance**	N/A	**Loss Of Guidance**	N/A	**Loss Of Guidance**	N/A	**Loss Of Guidance**	N/A	**Loss Of Guidance**	N/A	**Loss Of Guidance**	N/A
Obstacle Avoidance	1	**Obstacle Avoidance**	1	**Obstacle Avoidance**	1	**Obstacle Avoidance**	1	**Obstacle Avoidance**	1	**Obstacle Avoidance**	1	**Obstacle Avoidance**	1	**Obstacle Avoidance**	1
Output	N/A	**Output**	N/A	**Output**	N/A	**Output**	#7 Pin Drop	**Output**		**Output**		**Output**	#6 pin up	**Output**	N/a
END OF STEP		**END OF STEP**		**END OF STEP**		**END OF STEP**		**END OF STEP**		**END OF STEP**		**END OF STEP**		**END OF STEP**	
END MODE	Distance	**END MODE**	Distance	**END MODE**	Distance	**END MODE**	time	**END MODE**	Distance	**END MODE**	Distance	**END MODE**	Distance	**END MODE**	Distance
END ACTION	Merge	**END ACTION**	Merge	**END ACTION**	Merge	**END ACTION**	Merge	**END ACTION**	Merge	**END ACTION**	Merge	**END ACTION**	Merge	**END ACTION**	Merge
NEXT ROUTE	29	**NEXT ROUTE**	29	**NEXT ROUTE**	29	**NEXT ROUTE**	29	**NEXT ROUTE**	29	**NEXT ROUTE**	29	**NEXT ROUTE**	29	**NEXT ROUTE**	29
NEXT STEP	**26**	**NEXT STEP**	**27**	**NEXT STEP**	**28**	**NEXT STEP**	**29**	**NEXT STEP**	**30**	**NEXT STEP**	**31**	**NEXT STEP**	**32**	**NEXT STEP**	**33**

Route 29:33		Route 29:34		Route 29:35		Route 29:36		Route 29:37		Route 29:38		Route 29:39		Route 29:40	
STEP INITIATION		STEP INITIATION		STEP INITIATION		STEP INITIATION		STEP INITIATION		STEP INITIATION		STEP INITIATION		STEP INITIATION	
Go Mode	Auto	Go Mode	Auto	Go Mode	Auto	Go Mode	Auto	Go Mode	Auto	Go Mode	Auto	Go Mode	Auto	Go Mode	Auto
Radio Input	dio Input 1-	Radio Input	dio Input 1-	Radio Input	dio Input 1-	Radio Input	dio Input 1-	Radio Input	dio Input 1-	Radio Input	dio Input 1-	Radio Input	dio Input 1-	Radio Input	dio Input 1-
Hard Wire Input	N/A	Hard Wire Input	N/A	Hard Wire Input	N/A	Hard Wire Input	N/A	Hard Wire Input	N/A	Hard Wire Input	N/A	Hard Wire Input	N/A	Hard Wire Input	N/A
BIT	N/A	BIT	N/A	BIT	N/A	BIT	N/A	BIT	N/A	BIT	N/A	BIT	N/A	BIT	N/A
STEP ACTION		STEP ACTION		STEP ACTION		STEP ACTION		STEP ACTION		STEP ACTION		STEP ACTION		STEP ACTION	
Function	Rotate	Function	Reverse	Function	Rotate	Function	Reverse	Function	Delay	Function	Forward	Function	Rotate	Function	Reverse
Speed	33	Speed	33	Speed	33	Speed	33	Speed	33	Speed	33	Speed	33	Speed	33
Navigation	DR	Navigation	DR	Navigation	DR	Navigation	DR	Navigation	DR	Navigation	DR	Navigation	DR	Navigation	DR
Direction	Center	Direction	Center	Direction	Center	Direction	Center	Direction	Center	Direction	Center	Direction	Center	Direction	Center
Size	90	Size	60	Size	-45	Size	99	Size	5	Size	99	Size	45	Size	104
Loss Of Guidance	N/A	Loss Of Guidance	N/A	Loss Of Guidance	N/A	Loss Of Guidance	N/A	Loss Of Guidance	N/A	Loss Of Guidance	N/A	Loss Of Guidance	N/A	Loss Of Guidance	N/A
Obstacle Avoidance	1	Obstacle Avoidance	1	Obstacle Avoidance	1	Obstacle Avoidance	1	Obstacle Avoidance	1	Obstacle Avoidance	1	Obstacle Avoidance	1	Obstacle Avoidance	1
Output	N/a	Output	N/a	Output	N/a	Output	N/a	Output	#7 pin drop	Output	N/a	Output	N/a	Output	#7 pin raise
END OF STEP		END OF STEP		END OF STEP		END OF STEP		END OF STEP		END OF STEP		END OF STEP		END OF STEP	
END MODE	Distance	END MODE	Distance	END MODE	Distance	END MODE	Distance	END MODE	time	END MODE	Distance	END MODE	Distance	END MODE	Distance
END ACTION	Merge	END ACTION	Merge	END ACTION	Merge	END ACTION	Merge	END ACTION	Merge	END ACTION	Merge	END ACTION	Merge	END ACTION	Merge
NEXT ROUTE	29	NEXT ROUTE	29	NEXT ROUTE	29	NEXT ROUTE	29	NEXT ROUTE	29	NEXT ROUTE	29	NEXT ROUTE	29	NEXT ROUTE	29
NEXT STEP	34	NEXT STEP	35	NEXT STEP	36	NEXT STEP	37	NEXT STEP	38	NEXT STEP	39	NEXT STEP	40	NEXT STEP	41

Route 29:41		Route 29:42		Route 29:43		Route 29:44		Route 29:45		Route 29:46		Route 29:47		Route 29:48	
STEP INITIATION		STEP INITIATION		STEP INITIATION		STEP INITIATION		STEP INITIATION		STEP INITIATION		STEP INITIATION		STEP INITIATION	
Go Mode	Auto	Go Mode	Auto	Go Mode	Auto	Go Mode	Auto	Go Mode	Auto	Go Mode	Auto	Go Mode	Auto	Go Mode	Auto
Radio Input	dio Input 1-	Radio Input	dio Input 1-	Radio Input	dio Input 1-	Radio Input	dio Input 1-	Radio Input	dio Input 1-	Radio Input	dio Input 1-	Radio Input	dio Input 1-	Radio Input	dio Input 1-
Hard Wire Input	N/A	Hard Wire Input	N/A	Hard Wire Input	N/A	Hard Wire Input	N/A	Hard Wire Input	N/A	Hard Wire Input	N/A	Hard Wire Input	N/A	Hard Wire Input	N/A
BIT	N/A	BIT	N/A	BIT	N/A	BIT	N/A	BIT	N/A	BIT	N/A	BIT	N/A	BIT	N/A
STEP ACTION		STEP ACTION		STEP ACTION		STEP ACTION		STEP ACTION		STEP ACTION		STEP ACTION		STEP ACTION	
Function	Forward	Function	Rotate	Function	Reverse	Function	Delay	Function	Forward	Function	Rotate	Function	Reverse	Function	Rotate
Speed	33	Speed	33	Speed	33	Speed	33	Speed	33	Speed	33	Speed	33	Speed	33
Navigation	DR	Navigation	DR	Navigation	DR	Navigation	DR	Navigation	DR	Navigation	DR	Navigation	DR	Navigation	DR
Direction	Center	Direction	Center	Direction	Center	Direction	Center	Direction	Center	Direction	Center	Direction	Center	Direction	Center
Size	164	Size	-90	Size	102	Size	5	Size	102	Size	90	Size	60	Size	-45
Loss Of Guidance	N/A	Loss Of Guidance	N/A	Loss Of Guidance	N/A	Loss Of Guidance	N/A	Loss Of Guidance	N/A	Loss Of Guidance	N/A	Loss Of Guidance	N/A	Loss Of Guidance	N/A
Obstacle Avoidance	1	Obstacle Avoidance	1	Obstacle Avoidance	1	Obstacle Avoidance	1	Obstacle Avoidance	1	Obstacle Avoidance	1	Obstacle Avoidance	1	Obstacle Avoidance	1
Output	N/A	Output	N/A	Output	N/A	Output	#7 Pin Drop	Output	N/a	Output	N/a	Output	N/a	Output	N/a
END OF STEP		END OF STEP		END OF STEP		END OF STEP		END OF STEP		END OF STEP		END OF STEP		END OF STEP	
END MODE	Distance	END MODE	Distance	END MODE	Distance	END MODE	Time	END MODE	Distance	END MODE	Distance	END MODE	Distance	END MODE	Distance
END ACTION	Merge	END ACTION	Merge	END ACTION	Merge	END ACTION	Merge	END ACTION	Merge	END ACTION	Merge	END ACTION	Merge	END ACTION	Merge
NEXT ROUTE	29	NEXT ROUTE	29	NEXT ROUTE	29	NEXT ROUTE	29	NEXT ROUTE	29	NEXT ROUTE	29	NEXT ROUTE	29	NEXT ROUTE	29
NEXT STEP	42	NEXT STEP	43	NEXT STEP	44	NEXT STEP	45	NEXT STEP	46	NEXT STEP	47	NEXT STEP	48	NEXT STEP	49

Route 29:49		Route 29:50		Route 29:51		Route 29:52		Route 29:53		Route 29:54		Route 29:55		Route 29:56	
STEP INITIATION		STEP INITIATION		STEP INITIATION		STEP INITIATION		STEP INITIATION		STEP INITIATION		STEP INITIATION		STEP INITIATION	
Go Mode	Auto	Go Mode	Auto	Go Mode	Auto	Go Mode	Auto	Go Mode	Auto	Go Mode	Auto	Go Mode	Auto	Go Mode	Auto
Radio Input	dio Input 1-	Radio Input	dio Input 1-	Radio Input	dio Input 1-	Radio Input	dio Input 1-	Radio Input	dio Input 1-	Radio Input	dio Input 1-	Radio Input	dio Input 1-	Radio Input	dio Input 1-
Hard Wire Input	N/A	Hard Wire Input	Cart Prese	Hard Wire Input		Hard Wire Input		Hard Wire Input		Hard Wire Input		Hard Wire Input		Hard Wire Input	
BIT	N/A	BIT	N/A	BIT	N/A	BIT	N/A	BIT	N/A	BIT	N/A	BIT	N/A	BIT	N/A
STEP ACTION		STEP ACTION		STEP ACTION		STEP ACTION		STEP ACTION		STEP ACTION		STEP ACTION		STEP ACTION	
Function	Reverse	Function	Forward	Function	Rotate	Function	Forward	Function	Rotate	Function	Forward	Function	Rotate	Function	Forward
Speed	33	Speed	33	Speed	33	Speed	33	Speed	33	Speed	33	Speed	33	Speed	33
Navigation	DR	Navigation	DR	Navigation	DR	Navigation	DR	Navigation	DR	Navigation	DR	Navigation	DR	Navigation	DR
Direction	Center	Direction	Center	Direction	Center	Direction	Center	Direction	Center	Direction	Center	Direction	Center	Direction	Center
Size	99	Size	99	Size	45	Size	174	Size	90	Size	1240	Size	-90	Size	2284
Loss Of Guidance	N/A	Loss Of Guidance	N/A	Loss Of Guidance	N/A	Loss Of Guidance	N/A	Loss Of Guidance	N/A	Loss Of Guidance	N/A	Loss Of Guidance	N/A	Loss Of Guidance	N/A
Obstacle Avoidance	1	Obstacle Avoidance	1	Obstacle Avoidance	1	Obstacle Avoidance	1	Obstacle Avoidance	1	Obstacle Avoidance	1	Obstacle Avoidance	1	Obstacle Avoidance	1
Output	#6 Pin Raise	Output	N/a	Output	N/a	Output	N/a	Output	N/a	Output	N/a	Output	N/a	Output	N/a
END OF STEP		END OF STEP		END OF STEP		END OF STEP		END OF STEP		END OF STEP		END OF STEP		END OF STEP	
END MODE	Distance	END MODE	Distance	END MODE	Distance	END MODE	Distance	END MODE	Distance	END MODE	Distance	END MODE	Distance	END MODE	Distance
END ACTION	Merge	END ACTION	Merge	END ACTION	Merge	END ACTION	Merge	END ACTION	Merge	END ACTION	Merge	END ACTION	Merge	END ACTION	Merge
NEXT ROUTE	29	NEXT ROUTE	29	NEXT ROUTE	29	NEXT ROUTE	29	NEXT ROUTE	29	NEXT ROUTE	29	NEXT ROUTE	29	NEXT ROUTE	29
NEXT STEP	50	NEXT STEP	51	NEXT STEP	52	NEXT STEP	53	NEXT STEP	54	NEXT STEP	55	NEXT STEP	56	NEXT STEP	57

Route 29:57		Route 29:58		Route 29:59		Route 29:60		Route 29:61		Route 29:62		Route 29:63		Route 29:64	
STEP INITIATION		STEP INITIATION		STEP INITIATION		STEP INITIATION		STEP INITIATION		STEP INITIATION		STEP INITIATION		STEP INITIATION	
Go Mode	Auto	Go Mode	Auto	Go Mode	Auto	Go Mode	Auto	Go Mode	Auto	Go Mode	Auto	Go Mode	Auto	Go Mode	Auto
Radio Input	dio Input 1-	Radio Input	dio Input 1-	Radio Input	dio Input 1-	Radio Input	dio Input 1-	Radio Input	dio Input 1-	Radio Input	dio Input 1-	Radio Input	dio Input 1-	Radio Input	dio Input 1-
Hard Wire Input		Hard Wire Input		Hard Wire Input		Hard Wire Input		Hard Wire Input		Hard Wire Input		Hard Wire Input		Hard Wire Input	
BIT	N/A	BIT	N/A	BIT	N/A	BIT	N/A	BIT	N/A	BIT	N/A	BIT	N/A	BIT	N/A
STEP ACTION		STEP ACTION		STEP ACTION		STEP ACTION		STEP ACTION		STEP ACTION		STEP ACTION		STEP ACTION	
Function	Rotate	Function	Forward	Function	Rotate	Function	Forward	Function	Rotate	Function	Reverse	Function	Dellay	Function	Forward
Speed	33	Speed	33	Speed	33	Speed	33	Speed	33	Speed	33	Speed	33	Speed	33
Navigation	DR	Navigation	DR	Navigation	DR	Navigation	DR	Navigation	DR	Navigation	DR	Navigation	DR	Navigation	DR
Direction	Center	Direction	Center	Direction	Center	Direction	Center	Direction	Center	Direction	Center	Direction	Center	Direction	Center
Size	90	Size	511	Size	90	Size	274	Size	90	Size	62	Size	5	Size	62
Loss Of Guidance	N/A	Loss Of Guidance	N/A	Loss Of Guidance	N/A	Loss Of Guidance	N/A	Loss Of Guidance	N/A	Loss Of Guidance	N/A	Loss Of Guidance	N/A	Loss Of Guidance	N/A
Obstacle Avoidance	1	Obstacle Avoidance	1	Obstacle Avoidance	1	Obstacle Avoidance	1	Obstacle Avoidance	1	Obstacle Avoidance	1	Obstacle Avoidance	1	Obstacle Avoidance	1
Output	N/a	Output	N/a	Output	N/a	Output	N/a	Output	N/a	Output	N/a	Output	#7 Pin Drop	Output	
END OF STEP		END OF STEP		END OF STEP		END OF STEP		END OF STEP		END OF STEP		END OF STEP		END OF STEP	
END MODE	Distance	END MODE	Distance	END MODE	Distance	END MODE	Distance	END MODE	Distance	END MODE	Distance	END MODE	time	END MODE	Distance
END ACTION	Merge	END ACTION	Merge	END ACTION	Merge	END ACTION	Merge	END ACTION	Merge	END ACTION	Merge	END ACTION	Merge	END ACTION	Merge
NEXT ROUTE	29	NEXT ROUTE	29	NEXT ROUTE	29	NEXT ROUTE	29	NEXT ROUTE	29	NEXT ROUTE	29	NEXT ROUTE	29	NEXT ROUTE	29
NEXT STEP	58	NEXT STEP	59	NEXT STEP	60	NEXT STEP	61	NEXT STEP	62	NEXT STEP	63	NEXT STEP	64	NEXT STEP	65

Route 29:65		Route 29:66		Route 29:67		Route 29:68		Route 29:69		Route 29:70		Route 29:71		Route 29:72	
STEP INITIATION		STEP INITIATION		STEP INITIATION		STEP INITIATION		STEP INITIATION		STEP INITIATION		STEP INITIATION		STEP INITIATION	
Go Mode	Auto	Go Mode	Auto	Go Mode	Auto	Go Mode	Auto	Go Mode	Auto	Go Mode	Auto	Go Mode	Auto	Go Mode	Auto
Radio Input	dio Input 1-	Radio Input	dio Input 1-	Radio Input	dio Input 1-	Radio Input	dio Input 1-	Radio Input	dio Input 1-	Radio Input	dio Input 1-	Radio Input	dio Input 1-	Radio Input	dio Input 1-
Hard Wire Input		Hard Wire Input		Hard Wire Input		Hard Wire Input		Hard Wire Input		Hard Wire Input		Hard Wire Input	N/a	Hard Wire Input	N/a
BIT	N/A	BIT	N/A	BIT	N/A	BIT	N/A	BIT	N/A	BIT	N/A	BIT	N/A	BIT	N/A
STEP ACTION		STEP ACTION		STEP ACTION		STEP ACTION		STEP ACTION		STEP ACTION		STEP ACTION		STEP ACTION	
Function	Rotate	Function	Forward	Function	Rotate	Function	Forward	Function	Rotate	Function	Forward	Function	Rotate	Function	Forward
Speed	33	Speed	33	Speed	33	Speed	33	Speed	33	Speed	33	Speed	33	Speed	33
Navigation	DR	Navigation	DR	Navigation	DR	Navigation	DR	Navigation	DR	Navigation	DR	Navigation	DR	Navigation	DR
Direction	Center	Direction	Center	Direction	Center	Direction	Center	Direction	Center	Direction	Center	Direction	Center	Direction	Center
Size	90	Size	274	Size	-90	Size	511	Size	-90	Size	2284	Size	90	Size	962
Loss Of Guidance	N/A	Loss Of Guidance	N/A	Loss Of Guidance	N/A	Loss Of Guidance	N/A	Loss Of Guidance	N/A	Loss Of Guidance	N/A	Loss Of Guidance	N/A	Loss Of Guidance	N/A
Obstacle Avoidance	1	Obstacle Avoidance	1	Obstacle Avoidance	1	Obstacle Avoidance	1	Obstacle Avoidance	1	Obstacle Avoidance	1	Obstacle Avoidance	1	Obstacle Avoidance	1
Output		Output		Output		Output		Output		Output		Output	N/a	Output	N/a
END OF STEP		END OF STEP		END OF STEP		END OF STEP		END OF STEP		END OF STEP		END OF STEP		END OF STEP	
END MODE	Distance	END MODE	Distance	END MODE	Distance	END MODE	Distance	END MODE	Distance	END MODE	Distance	END MODE	Distance	END MODE	Distance
END ACTION	Merge	END ACTION	Merge	END ACTION	Merge	END ACTION	Merge	END ACTION	Merge	END ACTION	Merge	END ACTION	Merge	END ACTION	Merge
NEXT ROUTE	29	NEXT ROUTE	29	NEXT ROUTE	29	NEXT ROUTE	29	NEXT ROUTE	29	NEXT ROUTE	29	NEXT ROUTE	29	NEXT ROUTE	29
NEXT STEP	66	NEXT STEP	67	NEXT STEP	68	NEXT STEP	69	NEXT STEP	70	NEXT STEP	71	NEXT STEP	72	NEXT STEP	73

Route 29:73		Route 29:74		Route 29:75		Route 29:76		Route 29:77		Route 29:78		Route 0: 1	
STEP INITIATION		STEP INITIATION		STEP INITIATION		STEP INITIATION		STEP INITIATION		STEP INITIATION		STEP INITIATION	
Go Mode	Auto	Go Mode	Auto	Go Mode	Auto	Go Mode	Auto	Go Mode	Auto	Go Mode	Auto	Go Mode	nput Trigge
Radio Input	dio Input 1-	Radio Input	dio Input 1-	Radio Input	dio Input 1-	Radio Input	dio Input 1-	Radio Input	dio Input 1-	Radio Input	dio Input 1-	Radio Input	dio Input 1-
Hard Wire Input	N/a	Hard Wire Input	N/a	Hard Wire Input	N/a	Hard Wire Input	N/a	Hard Wire Input	N/a	Hard Wire Input	N/a	Hard Wire Input	N/a
BIT	N/A	BIT	N/A	BIT	N/A	BIT	N/A	BIT	N/A	BIT	N/A	BIT	BIT #1-#24
STEP ACTION		STEP ACTION		STEP ACTION		STEP ACTION		STEP ACTION		STEP ACTION		STEP ACTION	
Function	Rotate	Function	Forward	Function	Rotate	Function	Forward	Function	Rotate	Function	Reverse	Function	Auto
Speed	33	Speed	33	Speed	33	Speed	33	Speed	33	Speed	33	Speed	33
Navigation	DR	Navigation	DR	Navigation	DR	Navigation	DR	Navigation	DR	Navigation	DR	Navigation	DR
Direction	Center	Direction	Center	Direction	Center	Direction	Center	Direction	Center	Direction	Center	Direction	Center
Size	-90	Size	525	Size	90	Size	417	Size	-90	Size	66	Size	66
Loss Of Guidance	N/A	Loss Of Guidance	N/A	Loss Of Guidance	N/A	Loss Of Guidance	N/A	Loss Of Guidance	N/A	Loss Of Guidance	N/A	Loss Of Guidance	N/A
Obstacle Avoidance	1	Obstacle Avoidance	1	Obstacle Avoidance	1	Obstacle Avoidance	1	Obstacle Avoidance	1	Obstacle Avoidance	1	Obstacle Avoidance	1
Output	N/a	Output	N/a	Output	N/a	Output	N/a	Output	N/a	Output	N/a	Output	N/a
END OF STEP		END OF STEP		END OF STEP		END OF STEP		END OF STEP		END OF STEP		END OF STEP	
END MODE	Distance	END MODE	Distance	END MODE	Distance	END MODE	Distance	END MODE	Distance	END MODE	Distance	END MODE	Distance
END ACTION	Merge	END ACTION	Merge	END ACTION	Merge	END ACTION	Merge	END ACTION	Merge	END ACTION	Merge	END ACTION	Merge
NEXT ROUTE	29	NEXT ROUTE	29	NEXT ROUTE	29	NEXT ROUTE	29	NEXT ROUTE	29	NEXT ROUTE	0	NEXT ROUTE	0
NEXT STEP	74	NEXT STEP	75	NEXT STEP	76	NEXT STEP	77	NEXT STEP	78	NEXT STEP	1	NEXT STEP	1

Appendix D

I/O and Bits

			I/O																						
			F PR	F FB1	F FB2	T1 HT PR	T1 HT MT	T1 GT FC	GT MT posit	F MT	F FC	Scrap MT	Scrap MT 2	SBF 1	SBF 2	SBF 3	SBF 4	SBF 5	SBF 6	SBF 7	SBF 8	SBF 9	SBF 10	SBF 11	SBF 12
			1	**2**	**3**	**4**	**5**	**6**	**7**	**8**	**9**	**10**	**11**	**12**	**13**	**14**	**15**	**16**	**17**	**18**	**19**	**20**	**21**	**22**	**23**
Bits	F Request	**1**	1	0	0	0	0	0	0	0	0	0	0	0	0	0	0	0	0	0	0	0	0	0	0
	F cart 1	**2**	0	1	0	0	0	0	0	0	0	0	0	0	0	0	0	0	0	0	0	0	0	0	0
	F Cart 2	**3**	0	0	1	0	0	0	0	0	0	0	0	0	0	0	0	0	0	0	0	0	0	0	0
	Any T1 Request	**4**	0	0	0	1	1	1	1	1	1	0	0	0	0	0	0	0	0	0	0	0	0	0	0
	GT Full Cart	**5**	0	0	0	0	0	1	0	0	0	0	0	0	0	0	0	0	0	0	0	0	0	0	0
		6	0	0	0	0	0	0	0	1	0	0	0	0	0	0	0	0	0	0	0	0	0	0	0
		7	0	0	0	0	0	0	0	0	1	0	0	0	0	0	0	0	0	0	0	0	0	0	0
	HT MT	**8**	0	0	0	0	1	0	0	0	0	0	0	0	0	0	0	0	0	0	0	0	0	0	0
	HT MT pos	**9**	0	0	0	1	0	0	0	0	0	0	0	0	0	0	0	0	0	0	0	0	0	0	0
	GT MT pos	**10**	0	0	0	0	0	0	1	0	0	0	0	0	0	0	0	0	0	0	0	0	0	0	0
		11	0	0	0	0	0	0	0	0	0	1	0	0	0	0	0	0	0	0	0	0	0	0	0
		12	0	0	0	0	0	0	0	0	0	0	1	0	0	0	0	0	0	0	0	0	0	0	0
		13	0	0	0	0	0	0	0	0	0	0	0	1	0	0	0	0	0	0	0	0	0	0	0
		14	0	0	0	0	0	0	0	0	0	0	0	0	1	0	0	0	0	0	0	0	0	0	0
		15	0	0	0	0	0	0	0	0	0	0	0	0	0	1	0	0	0	0	0	0	0	0	0
		16	0	0	0	0	0	0	0	0	0	0	0	0	0	0	1	0	0	0	0	0	0	0	0
		17	0	0	0	0	0	0	0	0	0	0	0	0	0	0	0	1	0	0	0	0	0	0	0
		18	0	0	0	0	0	0	0	0	0	0	0	0	0	0	0	0	1	0	0	0	0	0	0
		19	0	0	0	0	0	0	0	0	0	0	0	0	0	0	0	0	0	1	0	0	0	0	0
		20	0	0	0	0	0	0	0	0	0	0	0	0	0	0	0	0	0	0	1	0	0	0	0
		21	0	0	0	0	0	0	0	0	0	0	0	0	0	0	0	0	0	0	0	1	0	0	0
		22	0	0	0	0	0	0	0	0	0	0	0	0	0	0	0	0	0	0	0	0	1	0	0
		23	0	0	0	0	0	0	0	0	0	0	0	0	0	0	0	0	0	0	0	0	0	1	0
		24	0	0	0	0	0	0	0	0	0	0	0	0	0	0	0	0	0	0	0	0	0	0	1