DESIGNING OF A VOLCANO SIMULATOR

Javier Cadena[1], Antoni Mànuel[1], Joaquín del Río[1], Joan Martí[2], Adelina Geyer[2], Erik Molino[1]

1-SARTI Research Group. Electronics Dept.. Universitat Politècnica de Catalunya (UPC).

2-Instituto Jaume Almera (CSIC), Lluís Sole Sabaris s/n, 08028 Barcelona, Spain phone: +(34) 932309500, Fax: +(34) 932309555

Introduction

In order to study the behavior of magmatic fluids in volcanoes, a small scale simulator chamber has been designed and it is in process of implementation. The system under development reproduces the conditions inside volcanoes in three different faces: before, during and after an eruption. Two main experiments are planned to be tested in this magmatic chamber:

1- First, two liquids (water and water with dye) are injected in the chamber and mix until a desired pressure is achieved (from 1 up to 4 atmospheres). Then, gas (compressed air) is introduced in order to decrease the density of the mixture at a given pressure. When the mixture is ready, it is heated until a desired temperature (from ambient temperature up to 150 ºC), at this precise moment, a valve opens to simulate a fissure in the rock and a slight loss of pressure (eruption). This is the point desired to be studied, the behavior of the mixture during the loss of pressure. Also, it is possible to introduce more liquid or gas if it is necessary for the experiment.

2- In the second experiment, a force is applied on top of the chamber (a solid metallic cylinder compresses the mixture), simulating the weight of a rock. By opening an exhaust valve, the pressure inside the chamber will decrease, and when the force produced by the cylinder is equal or greater than the pressure inside the chamber, the cylinder will begin to fall inside the chamber, and the fluids inside will flow through the gap in-between the cylinder and the chamber. The behavior of the liquid flowing through the gap is the main interesting part of the process, and it will be observed and studied. The actual pressures and mixtures will be defined on the basis of the experiment, trying different combinations.

The volcano simulator is a complex system that can be divided in different modules: a) the magmatic chamber; b) the pneumatic and hydraulic system and its control;

a) Magmatic chamber characteristics

The chamber is a crystal cylinder that allows a visual analysis of the processes developing inside the container. It will hold pressures of up to 4 atmospheres and temperatures of up to 150 ºC. Because of these specifications and the type of material, glass, it requires a protective shell of methacrylate to protect the scientific staff in case of a crystal break.

b) Pneumatic and hydraulic systems and its control

Two separated deposits store the liquids that will mix inside the chamber. The fluids can be pre-heated (up to 100 ºC) before enter the chamber. A pneumatic system has been designed to control the output pressure of the liquids, Figure 1. Since it is a system of high pressures and temperatures, the structure has an exhaust valve as security system, and a stop in case of a breakdown.

At the base of the chamber, there is a fluid distributor that introduces the liquids to the chamber trough either one or several holes. This allows simulating different scenarios of fractures, providing a single or multiple inputs to the chamber.

c) Acquisition system

Different variables are required to be observed during the experiment, as are the temperature, the pressure, and fluids flow at different points of the system. For this purpose, an acquisition system, connected to a PC, has been implemented, which also allows to control the operation and stores the data of interest.

Conclusions

A tool for studying the behavior of magmatic fluids inside volcanoes has been proposed and developed. This design permits to study and simulate the volcano activity in a laboratory, and to observe the fluids before and during the simulated eruptions.

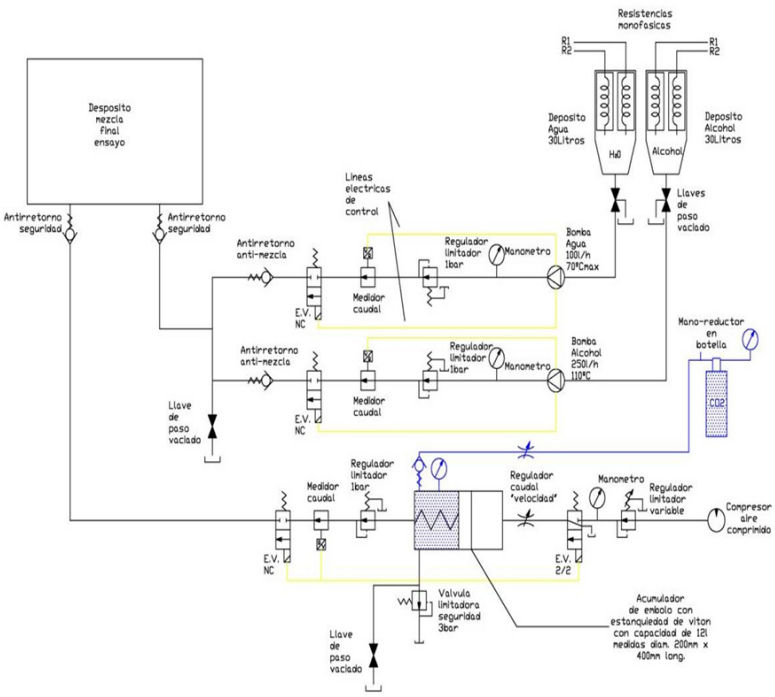

Fig. 1 Diagram of the pneumatic and hydraulic systems