tadata, citation and similar papers at core.ac.uk

ELSEVIER

Brain Research Bulletin 70 (2006) 171–178

RESEARCH BULLETIN

www.elsevier.com/locate/brainresbull

Implications of interrupted eye-head gaze shifts for resettable integrator reset

A.A. Kardamakis [a], A.K. Moschovakis [a,b,*]

[a] *Department of Basic Sciences, Faculty of Medicine, University of Crete, P.O. Box 1395, Heraklion 71003, Crete, Greece*
[b] *Institute of Applied and Computational Mathematics, FORTH, Heraklion, Crete, Greece*

Received 16 January 2006; received in revised form 15 April 2006; accepted 3 May 2006
Available online 22 May 2006

Abstract

The neural circuit responsible for saccadic eye movements is generally thought to resemble a closed loop controller. Several models of the saccadic system assume that the feedback signal of such a controller is an efference copy of "eye displacement", a neural estimate of the distance already travelled by the eyes, provided by the so-called "resettable integrator" (RI). The speed, with which the RI is reset, is thought to be fast or instantaneous by some authors and gradual by others. To examine this issue, psychophysicists have taken advantage of the target-distractor paradigm. Subjects engaged in it, are asked to look to only one of two stimuli (the "target") and not to a distractor presented in the diametrically opposite location and they often generate movement sequences in which a gaze shift towards the "distractor" is followed by a second gaze shift to the "target". The fact that the second movement is not systematically erroneous even when very short time intervals (about 5 ms) separate it from the first movement has been used to question the verisimilitude of gradual RI reset. To explore this matter we used a saccade-generating network that relies on a RI coupled to a head controller and a model of the rotational vestibulo-ocular reflex. An analysis of the activation functions of model units provides disproof by counterexample: "targets" can be accurately acquired even when the RI of the saccadic burst generator is not reset at all after the end of the first, interrupted eye-head gaze shift to the distractor and prior to the second, complete eye-head gaze shift to the "target".
© 2006 Elsevier Inc. All rights reserved.

Keywords: Saccades; Oculomotor system; Burst generator; Computational model

1. Introduction

Rapid shifts of the line of sight (gaze shifts) are often accomplished with rapid displacements of the eyes (saccades) with respect to the head accompanied by movements of the head with respect to the body. The execution of rapid gaze shifts is due, at least in part, to the activation of a layered midbrain nucleus, the superior colliculus (SC). Electrical stimulation of its deeper layers produces combinations of eye and head movements in the cat [11,36] and the monkey [5,9]. Also, the discharge of primate SC movement cells encodes the amplitude of gaze shifts rather than their eye or head components at least in the caudal SC [7]. Desired gaze shift commands are presumably decomposed downstream of the SC into separate commands to eye and head movers. While information about the response properties and connections of neurons that intervene between the SC and neck motoneurons is at present rather sketchy, there is considerable information about the neurons intervening between the SC and the extraocular motoneurons [32]. Of particular importance for the purposes of the present report are the burst generators of the saccadic system. These neural circuits are responsible for generating the transient discharges of extraocular motoneurons (MNs) that accompany saccades [14] and are made of several classes of neurons. Their output is conveyed to MNs by cells that display a brief burst of discharge before saccades of particular directions, the medium lead burst neurons (MLBNs, [45,30]). Other neurons also emit bursts of discharge before saccades of particular directions but their latency is longer (long-lead burst neurons—LLBNs, [23]) and still others pause during saccades of all directions (OPNs, [19]). In general, the parameters of discharge of the neurons that comprise the burst generators bear a close relationship to the metrical and often the dynamical characteristics of the saccades they accompany [16].

Following the neurophysiological and psychophysical demonstration that saccades can be modified in mid-flight [49,20], burst generators have been generally thought to resem-

* Corresponding author. Tel.: +30 2810 394509; fax: +30 2810 394530.
E-mail address: moschov@med.uoc.gr (A.K. Moschovakis).

0361-9230/$ – see front matter © 2006 Elsevier Inc. All rights reserved.
doi:10.1016/j.brainresbull.2006.05.001

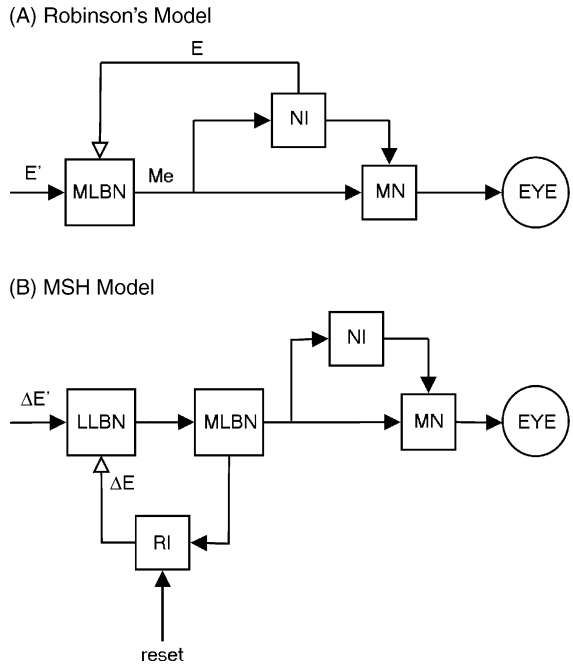

Fig. 1. Schematic illustration of the flow of information in Robinson's (A) and the MSH (B) model of the burst generator. Solid and open arrowheads indicate excitatory and inhibitory connections, respectively. Abbreviations: ΔE, eye displacement; $\Delta E'$, desired eye displacement; E, eye position; E', desired eye position; LLBN, long-lead burst neuron; MLBN, medium lead burst neuron; Me, motor error; MN, motoneuron; NI, neural integrator; RI, resettable integrator.

ble closed loop controllers. The feedback loop of such a controller automatically adjusts the intensity and the duration of MLBN bursts to fit the size of the saccades they accompany thus obviating the need to preprogram them. This requirement is rather permissive in that there are several ways to connect known saccade related cells into a closed loop saccadic burst generator [25]. For example, the early model of Robinson [39] illustrated in Fig. 1A assumes that MLBNs compare an internal feedback signal of eye position (E; supplied by the neural integrator, a neural network that integrates the bursts of MLBs to generate the sustained, eye position related discharges encountered in MNs during intersaccadic intervals) to a command signal of desired eye position (E'; equal to target position in space presumably originating in higher order structures). The instantaneous difference between E' and E can be thought of as a motor error (Me) signal which drives MLBNs until E matches E', the bursts stop and the eyes are on target.

To obviate the need for eye position feedback, later models assumed that it is a signal proportional to eye displacement (ΔE) that is fed back to the comparator to automatically adjust the intensity and duration of MLB bursts [18]. This created the need for a displacement integrator that would estimate the instantaneous displacement of the eyes and would be automatically reset at the end of each saccade. To address these issues, Moschovakis [25] proposed a model (MSH) that uses a copy of the output of its comparator (the LLBNs) to feed a resettable integrator (RI) that then projects back to LLBNs (Fig. 1B). When the estimate of distance travelled (the instantaneous value of the signal carrier by the RI) equals the desired eye displacement signal ($\Delta E'$) presumably sent to LLBNs by higher order structures, LLBNs and MLBNs stop discharging and the eyes land on target.

The speed with which the RI is reset to zero has been the subject of some debate. For example, the first computer model of a burst generator to employ a resettable integrator assumed that the RI resets because of the inhibitory projections it receives from OPNs [25]. Because OPNs quickly reach presaccadic levels of discharge when they resume firing, this model's RI was reset almost instantaneously. The consequences of employing a gradually resetting RI have also been explored after assuming that the RI is a "leaky" integrator [25]. Besides making the activation function of RI units resemble more closely the discharge pattern of the neurons that could play this role [31], use of a leaky RI would render the "active" OPN-based resetting mechanism redundant, in particular if the time constant (T) of the RI is short enough. In the absence of a fast resetting mechanism, one would expect saccade size to be influenced by preceding saccades in particular for intersaccadic intervals that are insufficiently long ($<3T$) to allow for complete decay of the RI signal. Because such closely spaced gaze shifts do not constitute a sizable fraction of the normal gaze shifts of humans and other animals, the target-distractor paradigm has been used to elicit them more frequently and address the issue of instantaneous versus gradual RI reset [4]. In this paradigm subjects are instructed to look to only one of two stimuli (the "target") and not to a distractor presented in the diametrically opposite location. While attempting to comply with the instruction, subjects sometimes generate a movement sequence in which the first gaze shift is in the direction of the "distractor" followed by a second gaze shift to the "target". In such cases, the second movement is not systematically erroneous even when very short time intervals (as short as 5 ms) separate it from the first movement [4]. On the basis of these results, the validity and existence of a gradually resetting displacement integrator in the gaze shifting system was questioned [4]. Here, we disprove this claim by using an extension of the MSH model to simulate closely spaced eye-head gaze shifts such as those generated in the target-distractor experiments. We demonstrate that "targets" can be accurately acquired in simulations of target-distractor experiments even if RI units are not reset at all until after the second gaze shift (to the target) reaches completion.

2. Methods

Fig. 2, is a block diagram of the ipsiversive half of the one-dimensional, two-directional neural network we simulated. Its top part is an expanded version of the MSH model whose units and the connections they establish have been described in detail before [25]. Briefly, the front stage of the MSH burst generator is the long-lead burst (LLBN) unit that receives a desired eye displacement command from the superior colliculus (SC). LLBNs integrate (positive feedback) the difference between the inputs they receive from the SC and the feedback they receive from the resettable integrator (RI) and contact both the MLBN units and the RI. The short loop through RI units bi-directionally connected with LLBNs is the characteristic feature of the MSH model and is consistent with the axonal terminations of putative upward RI units [31] and the location of upward LLBNs [2,34]. Consistent with their axonal terminations in the monkey [45,46,33,31], the excitatory (EBNs) and inhibitory (IBNs) MLBN units are shown to project to ipsilateral and contralateral motoneurons (MNs), respectively, both directly and through a neural integrator (NI). Similar evidence [45,15,32] supports the existence of EBN projections to OPNs through sign inverting local circuit neu-

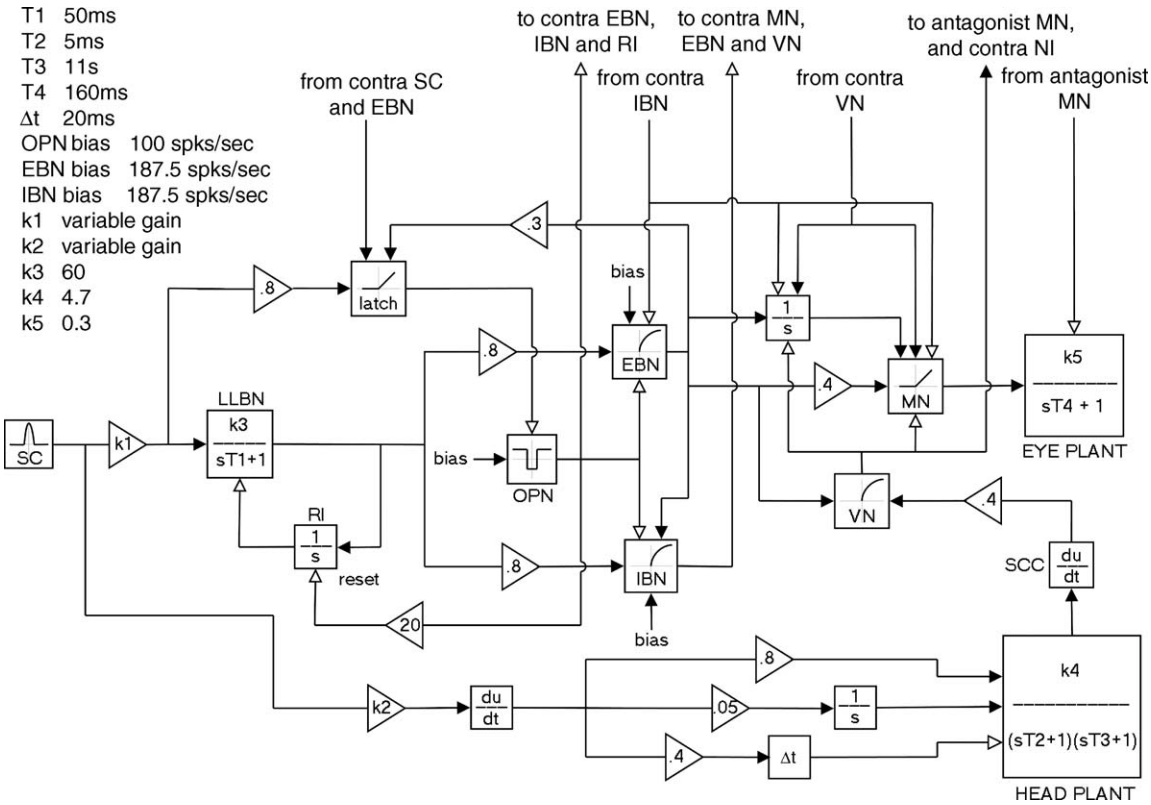

Fig. 2. Block diagrammatic illustration of the model we simulated. Abbreviations: EBN, excitatory burst neuron; IBN, inhibitory burst neuron; OPN, omni-pause neurons; SC, superior colliculus; SCC, semicircular canal; VN, vestibular nuclei. Other abbreviations and symbols as in Fig. 1.

rons (the "latch" unit of Fig. 2). Also in agreement with known anatomy [3,22], OPNs are shown to inhibit the MLBNs and the RI.

To obtain two-directional gaze shifts, we replicated this circuit to obtain contraversive saccades and connected the two sides of the brain via axons of IBNs and OPNs (contacting the targets indicated in Fig. 2). We also added a head controller and supplied it with a replica of the commands sent to the burst generator. Given the dearth of information regarding the discharge pattern and connections of relevant neurons the head controller is the most speculative portion of our model. Nevertheless, our assumptions regarding this part of the gaze shifting circuit are rather minimal. Firstly, we assumed that it is a differentiator that transforms the input it receives into a biphasic signal, the two phases of which correspond to the "action" and "braking" pulses encountered in electromyography records from neck muscles [13]. After separate amplification they were sent to motoneurons innervating muscles with a pulling direction similar (agonists) or opposite (antagonists) to that of the movement, respectively. In this manner, the SC signal was converted into the torque signals needed to accelerate (through agonist motoneurons) and decelerate (through antagonist motoneurons) the head plant, a second order system such as previously used to model movements of the head [6]. Our model also includes a vestibulo-ocular reflex (VOR) to generate eye movements equal in amplitude and opposite in direction to those of the head and thus stabilize the visual world on the retina during head movements. To this end, we lumped the semicircular canals and the primary vestibular afferents into a single unit that differentiates the head position signal and projects to the vestibular nuclei (VN). We also lumped type I and II units (these are neurons which increase their discharge with ipsiversive and contraversive head rotation, respectively) into the VN unit of our model. Consistent with presently available evidence (reviewed in [46]) type II units receive input from the BG and inhibit type I units. In turn, type I units receive input from the semicircular canals and send excitatory projections to the contralateral, and inhibitory projections to the ipsilateral, extraocular MNs. Because their activity is gated by the output of the burst generators these units pause during saccades. Since we made no effort to have them interact with the NI, the secondary vestibular units of our model carry no eye position information and thus, strictly speaking, cannot be thought of as the position-vestibular-pause (PVP) neurons [24]. Instead, they resemble vestibular-pause (VP) neurons [48]. They carry a head velocity signal except during saccades, and thus the gain of the VOR of our eye-head model is 0 during saccades and 1 at all other times.

Numerical experiments were carried out using Simulink version 6.0 (The MathWorks Inc.) on a Pentium IV personal computer with a clock frequency of 2.8 GHz. All numerical experiments simulations were left to run for 1 s with a time step of 0.12 ms. Nevertheless, other time steps were tried (1.0–0.1 ms) and produced identical results. The oculomotor plant we used is a single pole model of the eye and orbital tissues with a time constant of 160 ms [40]. The time constant of the integrators was assumed to be infinite (perfect integrators). With the exception of these and the oculomotor plant, the impulse response of all units was a Dirac δ function. In addition, their input–output characteristic was nonlinear. A threshold equal to zero ensured that negative firing frequencies were cut-off. Except for the LLBNs and saturating units, the input–output characteristic of the units we simulated was linear. Consistent with known physiology, LLBN and EBN units were set to saturate at frequencies <1100 Hz [32] and the primary vestibular afferents at 300 Hz [38].

3. Results

Fig. 3 provides examples of the time course of leftward and rightward gaze shifts generated by our model. The left column (Fig. 3A), illustrates an 80° leftward gaze shift (top) composed of a 60° saccade (middle) and a 20° head movement (bottom; measured at the end of the gaze shift) following activation of the right SC. After the end of the rapid eye movement, gaze is stabilized onto the stationary target (Fig. 3A, top) despite the fact that the head continues to move. Gaze stabilization is due to the engagement of the vestibulo-ocular reflex (VOR); because its gain was assumed equal to 1 before and after saccades, it generated eye movements of the same

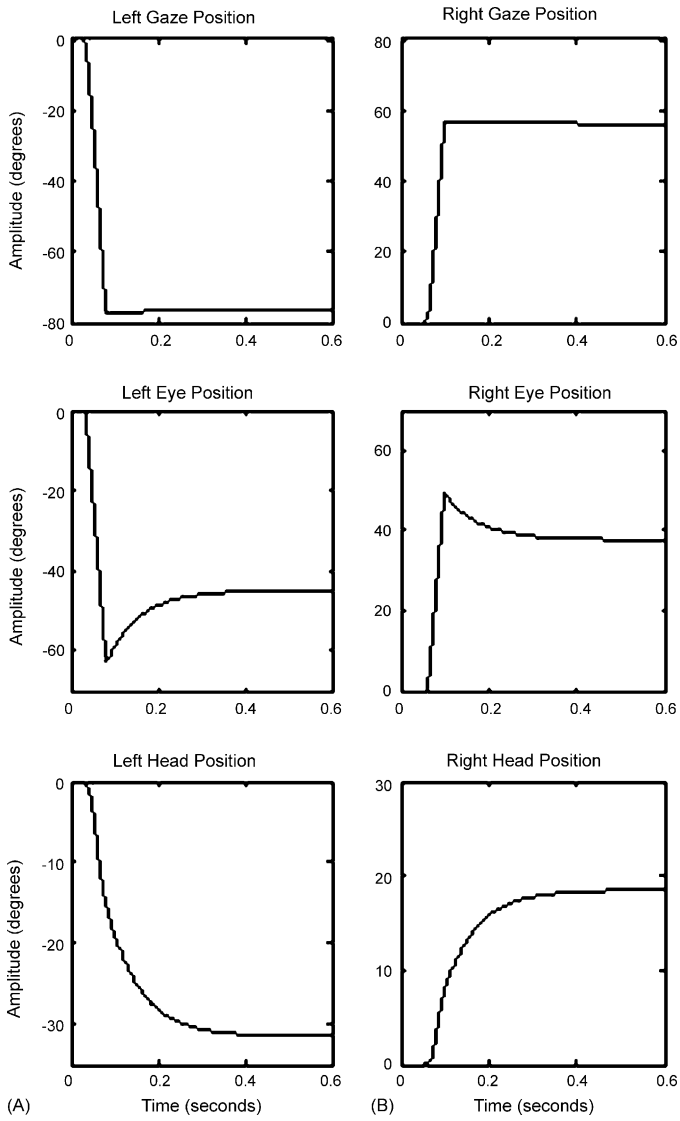

Fig. 3. Simulated eye-head gaze shifts to the left (A) and to the right (B). Panels from top to bottom illustrate instantaneous gaze, eye and head position, respectively.

velocity and opposite in direction to the continuing head movements.

Consistent with known neurophysiology, activation of SC units progressively more distant from the rostral edge of the SC led to progressively bigger gaze shifts [9]. We parametrized our model in such a way that activation of neighboring SC units led to the generation of gaze shifts that differed by about 7.5°. Also consistent with neurophysiology [44], we did not assume that neurons preferring bigger gaze shifts display higher maximal frequency or longer discharge duration. In fact, we made the simplifying assumption that all SC units display the same bell-shaped frequency profile (Fig. 2, SC) irrespective of the size of the movement evoked when they are activated. We also assumed that the gains k_1 and k_2 (Fig. 2) of the connections between SC units and their targets increase or decrease together with the size of the movements they prefer. For example, Fig. 3B illustrates a 60° rightward gaze shift composed of a 50° eye displacement and a 10° head displacement (again measured at the end of the gaze shift) which was evoked after activating a unit with gains k_1 and k_2 that were lower by 25% when compared to those of the unit responsible for the movement shown in Fig. 3A. The notion that the strength of connections between SC neurons and their targets is proportional to the size of the movements that the cells prefer has been used before to model the spatiotemporal transformation (STT) of the output of the SC (where desired eye displacement is place coded) into the rate code that is used by LLBNs [42,25]. It is also consistent with known neuroanatomy at least as concerns SC projections to the saccadic burst generator in the paramedian pontine reticular formation [29]. Here, we assumed that such a mapping device also applies to SC projections to the head controller. The latter was endowed with rather rudimentary processing power; in particular, it could not convert input signals of higher frequency into output signals of longer duration.

The movements illustrated in Fig. 3 are typical of the gaze shifts generated by our model and will be used to illustrate how it behaves during "interrupted" eye-head gaze shifts. Let us assume that two targets appear simultaneously, the first one 80° to the left and the second 20° to the right of straight-ahead. Had the first target appeared in isolation, activation of the right SC would evoke a completed gaze shift such as that of Fig. 3A leading to accurate target acquisition. However, the appearance of the second target 20° to the right of straight-ahead is presumably responsible for the interruption of the first gaze shift. To compensate for the excursion of the line of sight by 35° due to the first, interrupted movement, we assumed that the second command issuing from the left SC with a delay equal to 20 ms would dictate a gaze shift of 55° (20° + 35°). This second command cancels the first one, truncates the first leftward movement and generates a second rightward gaze shift roughly similar that of Fig. 3B directing the line of sight to the second target (Fig. 4A). As argued in the Section 4 (below), the point of our simulations is not to examine how and where commands issuing from the ipsilateral and contralateral SC interact with each other such that the first command is cancelled in mid-flight. Instead, it is to examine the signals carried by the resettable integrators and whether they interfere with the accuracy of gaze shifts in particular when these are closely spaced in time. As shown in Fig. 2, the RI units are assumed to work as perfect integrators (with infinite time constants) and to integrate the output of the long-lead burst neurons (to provide a neural estimate of actual eye displacement). Taking into consideration its transfer function and the inputs it receives, the instantaneous firing rate (f; in spikes/s) of the rightward RI unit of our model, as a function of time, is described by the expression:

$$f_{\mathrm{RI_r}}(t) = +\left\langle \alpha \int f_{\mathrm{LLB_r}}(t)\,\mathrm{d}t - \beta f_{\mathrm{OPN}}(t) \right\rangle \quad (1)$$

where $f_{\mathrm{LLB_r}}(t)$ is the activation function of the ipsilateral LLB unit, $f_{\mathrm{OPN}}(t)$ the activation function of the OPN unit, $+\langle\ \rangle$ indicates that only non-negative values of the argument are passed at the output of the unit and α, β are gains. Similarly, the instantaneous firing rate of the leftward RI unit of our model is described

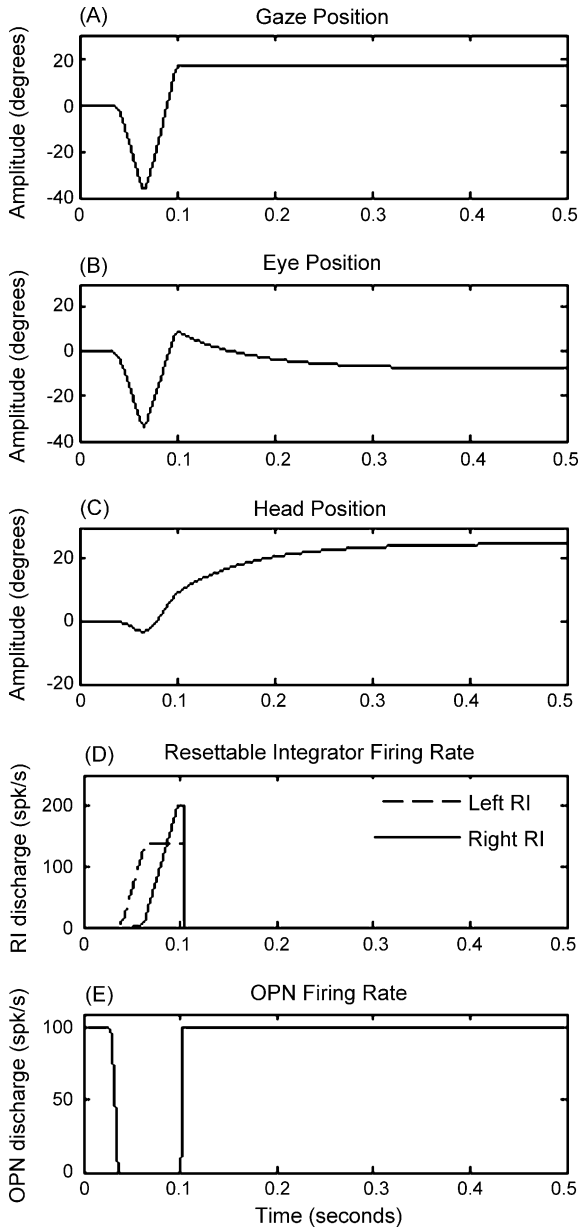

Fig. 4. Simulated leftward gaze shift that was interrupted in mid-flight and the line of sight redirected to the right. The top three traces illustrate instantaneous eye, head and gaze position, respectively. The bottom two traces illustrate the signals carried by the left (solid) and right (stippled) RI units and the OPNs.

by the expression:

$$f_{\mathrm{RI_l}}(t) = +\left\langle \alpha \int f_{\mathrm{LLB_l}}(t)\,\mathrm{d}t - \beta f_{\mathrm{OPN}}(t) \right\rangle \tag{2}$$

LLBN units (f_{LLB}) integrate the difference between the input from the SC (f_{SC}) and the output from the RI units (f_{RI}), with a time constant T_1 of 50 ms. Omni-pause (OPN) units receive bilateral input from EBNs and the SC via the 'latch units'. Because the gain of the latter is 1, the activation function of OPNs (f_{OPN}) can be simply expressed as

$$f_{\mathrm{OPN}}(t) = +\langle \mathrm{BIAS} - (f_{\mathrm{SC_r}}(t) + f_{\mathrm{SC_l}}(t) + f_{\mathrm{EBN_r}}(t) + f_{\mathrm{EBN_l}}(t))\rangle \tag{3}$$

where $f_{\mathrm{SC_r}}(t)$ is the activation function of the right SC (which controls leftward gaze shifts) and $f_{\mathrm{SC_l}}(t)$ is the activation function of the left SC (which controls rightward gaze shifts). The sum of the activation functions of the right ($f_{\mathrm{EBN_r}}$) and left ($f_{\mathrm{EBN_l}}$) EBNs operates simply as a gate that determines the duration of OPN pauses. The activity of EBNs also governs the accuracy of ipsiversive saccade metrics and is dictated by the activity of ipsilateral LLBNs that is in turn controlled by the 'closed-loop'.

We further define t_{l} and t_{r} the onset times of a leftward and a rightward gaze shift, respectively, and Δt_{l} (Δt_{r}) the duration of the leftward (rightward) eye saccades which accompany them. The duration of those produced by our model is correlated with their amplitude, ΔE_{l} and ΔE_{r}, through amplitude–duration relationships similar to that found in primates (not shown). For $t_{\mathrm{l}} < t < t_{\mathrm{l}} + \Delta t_{\mathrm{l}}$, $f_{\mathrm{EBN_l}}(t) > 0$ (leftward gaze shift) and for $t_{\mathrm{r}} < t < t_{\mathrm{r}} + \Delta t_{\mathrm{r}}$, $f_{\mathrm{EBN_r}}(t) > 0$ (rightward gaze shift), and since the negative sum in Eq. (3) is greater than the bias, $f_{\mathrm{OPN}}(t) = 0$ and thus Eqs. (1) and (2) are dominated by the activation functions of LLBNs. When $t = t_{\mathrm{l}} + \Delta t_{\mathrm{l}}$, $f_{\mathrm{EBN_l}}(t)$ becomes zero and the same is true of $f_{\mathrm{EBN_r}}(t)$ when $t = t_{\mathrm{r}} + \Delta t_{\mathrm{r}}$. Because of the descent of $f_{\mathrm{SC_l}}(t)$ and $f_{\mathrm{SC_r}}(t)$, which occurs in parallel, the activation of OPNs increases towards the bias (Eq. (3)). Because of the large value of the gain β, Eqs. (1) and (2) are dominated by the second term of their right hand side and the RI is reset instantaneously.

Neurally programmed gaze shifts are completed when there is enough time for each of them to reach its respective target (i.e., for $t_{\mathrm{r}} > t_{\mathrm{l}} + \Delta t_{\mathrm{l}}$, when, for example, a leftward gaze shift is followed by a rightward one). In cases such as this, the actual gaze shifts, ΔG_{l} and ΔG_{r} equal the desired gaze shifts ($\Delta G'_{\mathrm{l}}$ and $\Delta G'_{\mathrm{r}}$). If as in the example illustrated in Fig. 4A, the second, rightward gaze shift interrupts the earlier leftward one (i.e., for $t_{\mathrm{r}} < t_{\mathrm{l}} + \Delta t_{\mathrm{l}}$), $f_{\mathrm{SC_r}}$ is truncated and brought to zero instantaneously (at t_{r}). As a consequence, $\Delta \mathrm{G_l}$ is smaller than $\Delta G'_{\mathrm{l}}$ by an amount that depends on the value of $|t_{\mathrm{l}} + \Delta t_{\mathrm{l}} - t_{\mathrm{r}}|$ (this value is indicative of the proportion of the motor command that passed through the neural network prior to its truncation). The waveforms of both the $\mathrm{RI_l}$ and the $\mathrm{RI_r}$ units (located in opposite sides of the brain) are shown in Fig. 4D (dashed and solid lines, respectively) for a case such as this. The right RI ($\mathrm{RI_r}$), which participates in the control of the second gaze shift (to the "target"), reaches a peak value that corresponds to the excursion of the eyes that actually took place (from $-35°$ to $+20°$; Fig. 4D, solid). Its contents are cleared (i.e., it is reset) at the end of the rightward (second) saccade due to the inhibitory connection between the OPNs and the RI (Fig. 2) and the fact that OPNs resume firing at the end of the second movement (to the "target"; Fig. 4E).

The activation function of the left RI ($\mathrm{RI_l}$) unit (Fig. 4D, dashed), which participates in the generation of the interrupted gaze command to the "distractor", is more interesting. It has been claimed that in circumstances such as that illustrated in Fig. 4, the gaze shift directed to the "target" should be systematically hypometric unless the resettable integrator is instantaneously reset [4]. Fig. 4 disproves this claim, in that it demonstrates that

the RI_l continues to discharge after the end of the movement to the "distractor" and through the movement to the "target" and yet the latter is accurate. The failure of the RI_l unit of our model to reset upon gaze redirection is due to the fact that the OPNs remain silent (Fig. 4E). This is in turn due to the fact that the second command exiting the SC (f_{SC_l}) increases rapidly obeying a bell-shaped curve. Rather than silence the ongoing tonic discharge of OPNs, as is the case for the similarly shaped f_{SC_r}, the rapid ascent of f_{SC_l} helps maintain the OPNs in a state of inactivation (i.e., in this case Eq. (3) continues to be dominated by the activation of "latch units"—the term in parentheses on the right hand side of Eq. (3)). The RI_l is reset together with the RI_r (in the opposite side of the brain), only after the movement to the target is also complete $[f_{RI_l}(t_r + \Delta t_r) = f_{RI_r}(t_r + \Delta t_r) = 0]$ and the OPNs resume firing (Fig. 4E). The fact that RI_l holds a value proportional to the displacement feedback generated during the first leftward gaze shift to the "distractor" does not interfere in the least with the accuracy of the second rightward gaze shift to the "target".

4. Discussion

Our intention is not to present a model that accounts for all facets of eye-head coordination but rather to provide disproof by counter-example. The claim disproved is that because eye-head gaze shifts to a "target" are accurate even when they follow immediately after an interrupted gaze shift to a "distractor" the validity and existence of a gradually resetting displacement integrator in the gaze shifting system is questionable [4]. Our simulations demonstrate that eye-head gaze shifts to a "target" can overlap previous gaze shifts and remain accurate even if the displacement integrator is not reset at all. The reason is that the displacement feedback signals carried by the RI in one side of the brain need not interfere in the least with the accuracy of motor commands prepared by the burst generator located in the opposite side.

Our model is an extension of the MSH model to control eye-head gaze shifts. Accordingly, it inherits its plausibility as regards numerous psychophysical, anatomical, neurophysiological, lesion and microstimulation data [25]. Nevertheless, our model has considerable limitations. Firstly, its head controller is a fairly abstract one and its operation is limited to differentiation and scaling of the signals it receives from the SC. Nor does our model include cross talk from the head to the eye controllers that would enable it to account for the dependence of eye velocity profiles on the size of accompanying head movements [8]. Finally, it does not include proprioceptive input that would allow it to account for the accuracy of gaze shifts following head perturbation experiments [47]. More detailed elaboration of this part of the model will have to wait the collection of additional information about the discharge patterns and projections of the premotoneurons that contact neck MNs. Although it will be important to address these issues in future models of eye-head coordination, they do not affect the ability of our model to simulate "target-distractor" experiments or our conclusions regarding the involvement of the RI in their execution.

The "target" oriented movements that we simulated were in a direction opposite to that of the truncated "distractor" oriented movements that preceded them. Accordingly, we assumed that the two movements are executed in response to commands successively emitted by the two colliculi located in opposite sides of the brain. Further, we assumed that units carrying the SC commands driving the eyes and the head towards the target directly inhibit neurons of the opposite SC carrying commands driving the eyes to the "distractor" thus truncating them. This is consistent with the fact that the dynamics of the gaze, eye and head movements during the first, erroneous movement fit those of gaze shifts that had been programmed for much bigger amplitudes but were truncated [4]. The truncation of distractor oriented movements could be implemented through the well known commissural path that originates from tectal long-lead burst neurons [28] and is consistent with the fact that tectal cells which burst before saccades in one direction are inhibited during saccades in the opposite direction [17,37].

Consistent with the discharge pattern of SC neurons [7] our model assumes that each SC issues commands coding the metrics of gaze shifts contraversive to the activated SC. Although not tested in circumstances identical to the herein simulated ones (i.e., when the line of sight shifts towards a distractor before its redirection to the "target"), this is true even when the line of sight shifts in the interval between presentation of a target and execution of a saccade towards it (e.g., "double-step" stimulation experiments [12]). The neural processes needed to account for the accuracy of saccades in double-step stimulation experiments are thought to be complete by the time commands exit the SC (reviewed in [43,26]) and are therefore beyond the scope of the present model. Suffices to say that a model that is consistent with subject performance and relies on signals indicative of eye displacement rather than eye position has been proposed for the SC in the form of the "vector subtraction hypothesis" [28,26]. Moreover, a biologically plausible neural network model of the vector subtraction hypothesis that makes use of machinery that is known to exist in the SC has been proposed [1]. Its use as a sensorimotor interface in the present model would account, at least in part, for the generation of SC commands that would compensate for the excursion of the eyes due to the interrupted gaze shifts and drive the line of sight to the target.

Our model uses an MSH BG to control the ocular portion of the simulated eye-head gaze shifts and thus assumes that a RI generates the displacement feedback signals its local loop needs to function properly. It also assumes that each BG is endowed with a RI that estimates the instantaneous displacement of the eyes along the cardinal direction that the BG prefers. Taking into consideration the preferred directions of presaccadic neurons it is possible to delineate at least four burst generators in the primate brain [27]: (1) leftward, (2) rightward, (3) upward and (4) downward. The notion that the brain contains separate resettable integrators for each one of these cardinal directions is consistent with presently available evidence. For example, the interstitial nucleus of Cajal is known to contain cells that could embody the downward RI in that they emit bursts of discharge

shortly before the onset of downward saccades and their axonal terminations target the rostral interstitial nucleus of the medial longitudinal fasciculus, an area known to contain long-lead burst neurons [33]. As expected of cells that could embody a unidirectional RI (such as those simulated in the present study), the number of spikes in the bursts of such cells is well correlated to the amplitude of downward, and not upward, saccades [33]. Similarly, the number of spikes in the bursts of neurons that have been found in the nucleus of posterior commissure and could embody the upward RI is well correlated to the amplitude of upward, and not downward, saccades [31]. The existence of RI neurons that prefer a particular cardinal direction and help a BG prepare commands associated with movements in the same direction implies that the signals they carry need not interfere with the commands prepared by another BG for movements in the opposite direction.

Our simulations disprove the claim that the accuracy of closely spaced eye-head gaze shifts in "target-distractor" experiments questions the validity and existence of a gradually resetting displacement integrator in the gaze shifting system [4]. These authors also argued that their results are not "consistent with an alternative proposal of an instantaneous reset of the displacement integrator linked to the end of a saccade" given that the hypometric movements to the distractor "are essentially truncated and hence never reached completion" [4]. The accuracy of the target directed movements we simulated disproves this claim as well, in particular since as expected of Corneil et al. [4] failure to reach movement completion would prevent our model RI units from being reset. In both cases, the accuracy of the simulated movements is due to the fact that the displacement feedback signals carried by the RI in one side of the brain need not interfere in the least with the accuracy of motor commands prepared by the burst generator located in the other side. Although we simulated the RI units as perfect integrators that reset instantaneously as soon as the OPNs resume firing (i.e., at the end of the second movement, to the "target"), the same result would obtain had we used a gradually resetting RI, and for the same reason. Actually, the existence of a gradually resetting mechanism with a time constant roughly equal to 45 ms has been inferred from SC stimulation experiments demonstrating that the size of evoked saccades is an exponentially declining function of the time that elapses from a previous natural saccade [35,21]. However, we do not wish to argue in favor of a gradually resetting mechanism, in particular since there are reasons to doubt that the SC stimulation results elucidate properties of the RI. Firstly, the size of SC evoked saccades depends on the time that elapses from the beginning of a previous natural saccade, and not, as expected of a process that follows the saccade (such as the decay of the RI signal), its end [41]. Also, judging from the accuracy of closely spaced gaze shifts of the same direction that are evoked in "double-step" stimulation experiments and can be separated by intervals as short as 40 ms, the time constant of the resetting mechanism cannot be much longer than about 10 ms [10]. All in all, our modeling study emphasizes the need for caution when neural processes are deduced from psychophysics alone.

Acknowledgement

The financial support of grant 03ED803 from the Secretariat of Research and Technology is gratefully acknowledged.

References

[1] A. Bozis, A.K. Moschovakis, Neural network simulations of the primate oculomotor system III. A one-dimensional one-directional model of the superior colliculus, Biol. Cybern. 79 (1998) 215–230.

[2] U. Büttner, J.A. Büttner-Ennever, V. Henn, Vertical eye movement related activity in the rostral mesencephalic reticular formation of the alert monkey, Brain Res. 130 (1977) 239–252.

[3] J.A. Büttner-Ennever, U. Büttner, The reticular formation, in: J.A. Büttner-Ennever (Ed.), Neuroanatomy of the Oculomotor System, Elsevier, Amsterdam, 1988, pp. 119–176.

[4] B.D. Corneil, C.A. Hing, D.V. Bautista, D.P. Munoz, Human eye-head gaze shifts in a distractor task. I. Truncated gaze shifts, J. Neurophysiol. 82 (1999) 1390–1405.

[5] R.J. Cowie, D.L. Robinson, Subcortical contributions to head movements in macaques. I. Contrasting effects of electrical stimulation of a medial pontomedullary region and the superior colliculus, J. Neurophysiol. 72 (1994) 2648–2664.

[6] E.G. Freedman, Interactions between eye and head control signals can account for movement kinematics, Biol. Cybern. 84 (2001) 453–462.

[7] E.G. Freedman, D.L. Sparks, Activity of cells in the deeper layers of the superior colliculus of the rhesus monkey: evidence for a gaze displacement command, J. Neurophysiol. 78 (1997) 1669–1690.

[8] E.G. Freedman, D.L. Sparks, Eye-head coordination during head-unrestrained gaze shifts in rhesus monkeys, J. Neurophysiol. 77 (1997) 2328–2348.

[9] E.G. Freedman, T.R. Stanford, D.L. Sparks, Combined eye-head gaze shifts produced by electrical stimulation of the superior colliculus in rhesus monkeys, J. Neurophysiol. 76 (1996) 927–952.

[10] H.H.L.M. Goossens, A.J. Van Opsdtal, Local feedback signals are not distorted by prior eye movements: evidence from visually evoked double saccades, J. Neurophysiol. 78 (1997) 533–538.

[11] D. Guitton, M. Crommelinck, A. Roucoux, Stimulation of the superior colliculus in the alert cat. I. Eye movements and neck EMG activity evoked when the head is restrained, Exp. Brain Res. 39 (1980) 63–73.

[12] P.E. Hallett, A.D. Lightstone, Saccadic eye movements to flashed targets, Vis. Res. 16 (1976) 107–114.

[13] B. Hannaford, W.S. Kim, S.H. Lee, L. Stark, Neurological control of head movements: inverse modeling and electromyographic evidence, Math. Biosci. 78 (1986) 159–178.

[14] V. Henn, B. Cohen, Quantitative analysis of activity in eye muscle motoneurons during saccadic eye movements and positions of fixation, J. Neurophysiol. 36 (1973) 115–126.

[15] K. Hepp, V. Henn, T. Vilis, B. Cohen, Brainstem regions related to saccade generation, in: R.E. Wurtz, M.E. Goldberg (Eds.), The Neurobiology of Saccadic Eye Movements, Elsevier, Amsterdam, 1989, pp. 105–212.

[16] K. Hepp, T. Vilis, V. Henn, On the generation of rapid eye movements in three dimensions, in: B. Cohen, V. Henn (Eds.), Representation of Three-dimensional Space in the Vestibular, Oculomotor, and Visual Systems, New York Academy of Sciences, New York, 1988, pp. 140–153.

[17] C. Infante, J. Leiva, Simultaneous unitary neuronal activity in both superior colliculi and its relation to eye movements in the cat, Brain Res. 381 (1986) 390–392.

[18] R. Jürgens, W. Becker, H.H. Kornhuber, Natural and drug-induced variations of velocity and duration of human saccadic eye movements: evidence for a control of the neural pulse generator by local feedback, Biol. Cybern. 39 (1981) 87–96.

[19] E.L. Keller, Participation of medial pontine reticular formation in eye movement generation in monkey, J. Neurophysiol. 37 (1974) 316–332.

[20] E.L. Keller, Control of saccadic eye movements by midline brainstem neurons, in: R. Baker, A. Berthoz (Eds.), Control of Gaze by Brainstem Neurons, Elsevier, Amsterdam, 1977, pp. 327–336.
[21] A.A. Kustov, D.L. Robinson, Modified saccades evoked by stimulation of the macaque superior colliculus account for properties of the resettable integrator, J. Neurophysiol. 73 (1995) 1724–1728.
[22] T.P. Langer, C.R.S. Kaneko, Efferent projections of the cat oculomotor reticular omnipause neuron region: an autoradiographic study, J. Comp. Neurol. 217 (1983) 288–306.
[23] E.S. Luschei, A.F. Fuchs, Activity of brain stem neurons during eye movements of alert monkeys, J. Neurophysiol. 35 (1972) 445–461.
[24] R.A. McCrea, A. Strassman, E. May, S.M. Highstein, Anatomical and physiological characteristics of vestibular neurons mediating the horizontal vestibulo-ocular reflex in the squirrel monkey, J. Comp. Neurol. 264 (1987) 547–570.
[25] A.K. Moschovakis, Neural network simulations of the primate oculomotor system. I. The vertical saccadic burst generator, Biol. Cybern. 70 (1994) 291–302.
[26] A.K. Moschovakis, Neural network simulations of the primate oculomotor system. II. Frames of reference, Brain Res. Bull. 40 (1996) 337–345.
[27] A.K. Moschovakis, S.M. Highstein, The anatomy and physiology of primate neurons that control rapid eye movements, Ann. Rev. Neurosci. 17 (1994) 465–488.
[28] A.K. Moschovakis, A.B. Karabelas, S.M. Highstein, Structure-function relationships in the primate superior colliculus. II. Morphological identity of presaccadic neurons, J. Neurophysiol. 60 (1988) 263–302.
[29] A.K. Moschovakis, T. Kitama, Y. Dalezios, J. Petit, A.M. Brandi, A.A. Grantyn, An anatomical substrate for the spatiotemporal transformation, J. Neurosci. 18 (1998) 10219–10229.
[30] A.K. Moschovakis, C.A. Scudder, S.M. Highstein, A morphological basis for Hering's law: projections to extraocular motoneurons, Science Wash DC 248 (1990) 1118–1119.
[31] A.K. Moschovakis, C.A. Scudder, S.M. Highstein, Structure of the primate burst generator. I. Medium-lead burst neurons with upward on-directions, J. Neurophysiol. 65 (1991) 203–217.
[32] A.K. Moschovakis, C.A. Scudder, S.M. Highstein, The microscopic anatomy and physiology of the mammalian saccadic system, Prog. Neurobiol. 50 (1996) 133–254.
[33] A.K. Moschovakis, C.A. Scudder, S.M. Highstein, J.D. Warren, Structure of the primate burst generator. II. Medium-lead burst neurons with downward on-directions, J. Neurophysiol. 65 (1991) 218–229.
[34] S. Nakao, Y. Shiraishi, W.-B. Li, T. Oikawa, Mono- and disynaptic excitatory inputs from the superior colliculus to vertical saccade-related neurons in the cat Forel's field *H*, Exp. Brain Res. 82 (1990) 222–226.
[35] M.J. Nichols, D.L. Sparks, Nonstationary properties of the saccadic system: new constraints on models of saccadic control, J. Neurophysiol. 73 (1995) 431–435.
[36] M. Paré, M. Crommelinck, D. Guitton, Gaze shifts evoked by stimulation of the superior colliculus in the head-free cat conform to the motor map but also depend on stimulus strength and fixation activity, Exp. Brain Res. 101 (1994) 123–139.
[37] C.K. Peck, Neuronal activity related to head and eye movements in cat superior colliculus, J. Physiol. 421 (1990) 79–104.
[38] P.D. Pulaski, D.S. Zee, D.A. Robinson, The behavior of the vestibulo-ocular reflex at high velocities of head rotation, Brain Res. 222 (1981) 159–165.
[39] D.A. Robinson, Oculomotor control signals, in: P. Bacy-y-Rita, G. Lennerstrand (Eds.), Basic Mechanisms of Ocular Motility and their Clinical Implications, Pergamon Press, Oxford, 1975, pp. 337–374.
[40] D.A. Robinson, Control of eye movements, in: V.B. Brooks (Ed.), The Nervous System, Williams and Wilkins, Baltimore, MD, 1981, pp. 1275–1320.
[41] J. Schlag, A. Pouget, S. Sadeghpour, M. Schlag-Rey, Interactions between natural and electrically evoked saccades. III. Is the nonstationarity the result of an integrator not instantaneously reset? J. Neurophysiol. 79 (1998) 903–910.
[42] C.A. Scudder, A new local feedback model of the saccadic burst generator, J. Neurophysiol. 59 (1988) 1455–1475.
[43] D.L. Sparks, Translation of sensory signals into commands for control of saccadic eye movements: role of primate superior colliculus, Physiol. Rev. 66 (1986) 118–171.
[44] D.L. Sparks, R. Holland, B.L. Guthrie, Size and distribution of movement fields in the monkey superior colliculus, Brain Res. 113 (1976) 21–34.
[45] A. Strassman, S.M. Highstein, R.A. McCrea, Anatomy and physiology of saccadic burst neurons in the alert squirrel monkey. I. Excitatory burst neurons, J. Comp. Neurol. 249 (1986) 337–357.
[46] A. Strassman, S.M. Highstein, R.A. McCrea, Anatomy and physiology of saccadic burst neurons in the alert squirrel monkey. II. Inhibitory burst neurons, J. Comp. Neurol. 249 (1986) 358–380.
[47] R.D. Tomlinson, P.S. Bahra, Combined eye-head gaze shifts in the primate. II. Interactions between saccades and the vestibuloocular reflex, J. Physiol. 56 (1986) 1558–1570.
[48] R.D. Tomlinson, D.A. Robinson, Signals in vestibular nucleus mediating vertical eye movements in the monkey, J. Neurophysiol. 51 (1984) 1121–1136.
[49] D.S. Zee, L.M. Optican, J.D. Cook, D.A. Robinson, W.K. Engel, Slow saccades in spinocerebellar degeneration, Arch. Neurol. 33 (1976) 243–251.